TABLE OF CONTENTS

TABLE OF CONTENTS (CONT'D)

TABLE OF CONTENTS (CONT'D)

TABLE OF CONTENTS (CONT'D)

TABLE OF CONTENTS (CONT'D)

TABLE OF CONTENTS (CONT'D)

TABLE OF CONTENTS (CONT'D)

14.1 Summary Description

The purpose of this section is to evaluate the ability of the plant to operate without undue risk to the safety of the public.

The analytical objective of this evaluation is to demonstrate that plant systems essential to safety are capable of performing their functions during transients or postulated accidents, concurrent with postulated equipment failures.

These transients and the limiting accident parameters are generally re-verified for applicability every core reload. Where applicable, the initial conditions, analytical methods, and results presented herein are for the current reload cycle.

01511192

As required by NRC Generic Letter 88-20 (Reference 84), an Individual Plant Examination (IPE) Report for Monticello was prepared and submitted to the NRC in February of 1992 (Reference 72), with additional information provided in February of 1993 (Reference 73). By letter dated May 26, 1994 (Reference 77), the NRC transmitted the NRC Staff Evaluation of the Monticello IPE. The IPE is a full scope probabilistic risk assessment consisting of Level 1 and Level 2 analyses. The two analyses were used to determine an estimate of the probability and type of releases which could potentially result from a severe accident. The IPE report provides valuable insights concerning the safety significance of various postulated accidents and failures.

Generic Letter 88-20, Supplement No. 4, “Individual Plant Examination of External Events (IPEEE) for Severe Accident Vulnerabilities,” dated June 28, 1991 (Reference 85), requested licensees to complete an IPEEE. The purpose of the IPEEE is to develop appreciation of severe accident behavior, (2) understand the most likely severe accident sequences that occur under full power conditions, (3) gain a qualitative understanding of the overall likelihood of core damage and radioactive material release, and (4) to identify potential plant enhancements to reduce the overall likelihood of core damage and radioactive material releases. By letters dated December 20, 1991(Reference 86); January 5, 1995 (Reference 87); March 1, 1995 (Reference 88); and November 20, 1995 (Reference 89); Monticello responded to Generic Letter 88-20, Supplement 4.

By letter dated March 1, 1995 (Reference 88), Monticello forwarded the report documenting the results of the Monticello Individual Plant Examination of External Events (IPEEE) as requested by Generic Letter 88-20. This report addressed internal fires, high winds, floods and other credible events. By letter dated November 20, 1995 (Reference 89), Monticello submitted revised information concerning the evaluation of internal fires as well as the seismic event evaluation.

The IPEEE evaluation of seismic, internal fires, high winds, floods and other credible events provides valuable insights concerning the safety significance of various postulated accidents and failures. The NRC review of information submittals related to IPEEE has determined that no vulnerabilities associated with aspects of external events were identified and the staff considers these issues resolved for Monticello (Reference 119).

MNGP conducted an evaluation to identify the risk implications due to Extended Power Uprate (EPU) operation at 2004 MWt at MNGP. Risk impacts due to internal and external events were evaluated. The results indicate that the risk impact is acceptable. The risk

assessment report and the associated NRC reviews are contained in References 130, 131, 132, 133, and 134.

14.1.1 General Safety Design Basis

Limits on plant operation are established to ensure that the plant can be safely operated and not pose any undue risk to the health and safety of the public. This is accomplished by demonstrating that radioactive release from the plant for normal operation, transients, and postulated accidents meets applicable regulations in which conservative limits are documented.

14.1.2 Operational Design Basis

The objective for normal operation and transient events is to maintain nucleate boiling and thus avoid a transition to film boiling. Operating limits are specified to maintain adequate margin to the onset of the boiling transition. The figure of merit utilized for plant operation is the Critical Power Ratio (CPR). This is defined as the ratio of the critical power (bundle power at which some point within the assembly experiences onset of boiling transition) to the operating bundle power. The critical power is determined at the same mass flux, inlet temperature, and pressure which exists at the specified reactor condition. Thermal margin is stated in terms of the value of the Minimum Critical Power Ratio, MCPR, which corresponds to the most limiting fuel assembly in the core. To ensure that adequate margin is maintained, a design requirement based on a statistical analysis was selected as follows:

> The limiting value of MCPR is to be established such that at least 99.9% of the fuel rods in the core are not expected to experience boiling transition during normal operation or AOOs (Reference 217).

01511192

Both the transient (safety) and normal operating thermal limits in terms of MCPR are derived from this basis. A discussion of these limits is given in Sections 14.2 and 14.3 (See Section 3.2 for a more detailed discussion.)

14.1.3 Primary System Integrity Design Basis

The ASME Boiler and Pressure Vessel Code and other codes and standards require that the pressure relief system prevent overpressurization of the primary system process barrier and the pressure vessel. The allowable pressure and prescribed evaluations are determined by these requirements. The analysis performed to demonstrate conformance to the requirements is documented in Section 14.5.

14.1.4 Plant Stability Design Basis

Three types of stability are considered in the design of boiling water reactors: (1) reactor core (reactivity) stability; (2) channel hydrodynamic stability; and (3) total system stability. A stable system is analytically demonstrated if no inherent limit cycle or divergent oscillation develops within the system as a result of calculated step disturbances of any critical variable, such as steam flow, pressure, neutron flux, or recirculation flow. The criteria for evaluating reactor dynamic performance and stability are stated in terms of two compatible parameters. First is the decay ratio, x_2/x_0, which is the ratio of the magnitude of the second overshoot to the first overshoot resulting from a

step perturbation. A plot of the decay ratio is a graphic representation of the physical responsiveness of the system which is readily evaluated in a time-domain analysis. Second is the damping coefficient, ζ_n the definition of which corresponds to the dominant pole pair closest to the imaginary axis in the s-plane for the system closed-loop transfer function. As ζ_n decreases, the closed-loop roots approach the imaginary axis and the response becomes increasingly oscillatory. This parameter also applies to the frequency-domain interpretation.

Detailed evaluations have been conducted to substantiate that the design of the Monticello Nuclear Generating Plant is adequate with respect to thermal hydraulic stability. Additional information concerning these evaluations is provided in Section 14.6.

14.1.5 Design Basis for Accidents

The effects of the various postulated accidents are investigated for a variety of plant conditions in Section 14.7. Accident limits are specified as follows:

a. calculated radioactive material releases do not result in exposures exceeding the limits of 10CFR50.67;

b. catastrophic failure of fuel cladding, including fragmentation of fuel cladding and excessive fuel enthalpy is not predicted;

c. nuclear system or containment (when required) stresses in excess of those allowed for accidents by applicable codes will not result;

d. dose received by Control Room operators will not exceed the limits of 10CFR50.67 or 10CFR50 Appendix A, GDC 19.

14.2 Fuel Cladding Integrity Safety Limit

The generation of the Safety Limit Minimum Critical Power Ratio (SLMCPR) requires a statistical analysis of the core near the limiting Minimum Critical Power Ratio (MCPR) condition. The statistical analysis is utilized to determine the MCPR corresponding to the transient design requirement given in Section 14.1. This MCPR established Fuel Cladding Integrity Safety Limit applies not only for core wide transients, but is also conservatively applied to the localized rod withdrawal error transient.

The statistical analysis utilizes a model of the BWR core which simulates the process computer function. This code produces a critical power ratio (CPR) map of the core based on inputs of power distribution and flow and on heat balance information.

Bounding cycle specific statistical analyses performed by AREVA provide conservative SLMCPRs for each operating cycle. The SLMCPRs for the current reactor fuel cycle are provided in Technical Specification 2.1.1.2. 01511192

In order to account for the differences in core flow and assembly power uncertainty during single loop operation, separate SLMCPRs are calculated for single and two loop operation. (Reference 217) 01511192

The ACE critical power correlation will be used for the ATRIUM 10XM fuel (Reference 214). This is an NRC approved correlation based on AREVA full scale bundle test data. The SPCB critical power correlation will be used for GNF fuel (Reference 215). This is an NRC approved correlation with correlation coefficients based on the indirect correlation method described in Reference 200. The indirect correlation method requires that correlation coefficients and statistical values be determined via comparison to the inputs and results of another NRC approved CPR correlation. In this case, the SPCB correlation is compared to GEXL14 (Reference 216), which was used for GE14 fuel at Monticello when core analysis was performed by GNF. The NRC approved use of ACE and the indirectly correlated SPCB in License Amendment 188 (Reference 199). 01511192

As described in Reference 189, a 0.03 SLMCPR adder is required when evaluating events that initiation from above 42 MWt/Mlbm/hr in the EFW domain.

14.3 Operating Limits

14.3.1 MCPR Calculational Procedure

A reload specific Operating Limit Minimum Critical Power Ratio (OLMCPR) is established to ensure that the Fuel Cladding Integrity Safety Limit (i.e., the Safety Limit Minimum Critical Power Ratio, SLMCPR) is not exceeded for any moderate frequency transient. OLMCPR are established as a function of core power and as a function of core flow. Analyses of moderate frequency events are performed to establish OLMCPR for operation within the licensed Power - Flow operating map. OLMCPR are established by adding the maximum ΔCPR for the most limiting moderate frequency event to the SLMCPR. A summary of the analyses performed in support of the current cycle can be found in Section 14A. 01511192

14.3.1.1 General Assumptions and Models

Safety Evaluation Methods

The transient, accident, and steady-state analysis methods used are consistent with the methods described in the NRC approved topical report for Monticello or an NRC approved topical report for the supplier of the analysis service (References 106, 201, 202, 203, 217). 01511192

The fuel bundle critical power ratios are calculated using approved correlations specific to the fuel types used in the core.

A conservative, usually maximum, power condition, is assumed with thermally limited fuel conditions. The philosophy with respect to using the equipment performance components of the transient models for design and safety evaluations is to consider conservative performance of key components. Circuitry delays in the reactor protection system as well as other key equipment circuit delays are conservatively assumed. CPR limits are provided for varying scram insertion times. The setpoints for the safety/relief valves both in the safety and relief function for pressure scram are assumed at their specified limits with added uncertainties. Other equipment performance such as relief and safety valve opening characteristics, recirculation pump drive train inertia, and main steam line isolation valve closing times are conservatively assumed. 01511192

End of Hot Full Power Reactivity Considerations

End of Hot Full Power (EHFP) conditions for nuclear data are used (except where specific exposure dependent evaluations are performed) to provide a varying level of conservatism associated with core exposure aspects. The nuclear data which are re-evaluated for each reload analysis are the scram reactivity function, void reactivity function and Doppler reactivity function.

Scram reactivity is the worth of control rods as a function of time or position following the scram signal. The scram reactivity insertion is normally lowest at the End of Hot Full Power (all rods out condition) because there are no stubbed rods to insert negative reactivity more quickly than the remaining blades of the control rod bank.

The void reactivity coefficient is an important parameter, not only in transient analysis, but also in core stability. The core average void coefficient must be negative; however, it must not be so negative as to yield such a strong positive reactivity feedback during void collapse events that core and vessel limits are threatened. Conversely, events with void increase must produce sufficient negative feedback to maintain operation within safety limits.

The presence of U-238 and, ultimately, Pu-240 contributes to yield a strong negative Doppler coefficient. This coefficient provides instantaneous negative reactivity feedback to any fuel temperature rise, either gross or local. The magnitude of the Doppler coefficient is not dependent on gadolinium position or concentration in any bundle because gadolinium has very little effect on the resonance group flux or on U-238 content of the core.

14.3.1.2 Calculation of Operating Limit MCPR for Core Reload

The Operating Limit Minimum Critical Power Ratio (OLMCPR) at full power, and off-rated power and flow conditions, is determined by analyzing the most limiting events and calculating a conservative margin which would prevent 99.9% of the fuel from entering into the transition boiling flow regime. The severity of event and the impact on the OLMCPR is primarily a function of the following factors: 01511192

- cycle operating plan; including fuel characteristics, reload size, cycle length, setpoints, and operational flexibility,
- operating power and flow conditions,
- core depletion, and
- measured cycle specific Control Rod Drive (CRD) scram times.

The factors listed above cover a range of operating conditions, therefore the OLMCPR may also vary with changes in operating conditions. The cycle specific analyses attempt to provide plant operational flexibility while maintaining the required margins to operating limits in order to ensure safety.

The dependence of the OLMCPR on the core power and flow conditions is determined through the use of the methodology outlined in References 201, 202, and 203 and the Average Power Range Monitor, Rod Block Monitor and Technical Specification Improvement Program (ARTS). 01511192

The OLMCPR may also vary with the ability of the CRDs to insert within a specified time and mitigate the consequences of a transient or accident.

Reload dependent plant initial conditions, parameters, and Operating Limit Minimum Critical Power Ratio (OLMCPR) results for the limiting core wide transients are given in the current cycle's reload licensing analysis. The results of the current cycle's analysis are summarized in Section 14A. Densification power spiking is not considered in establishing the OLMCPR. 01511192

Reduced Flow Considerations - ARTS

Flow dependent CPR limits are necessary to assure that the Safety Limit Minimum CPR (SLMCPR) is not exceeded during flow runout events. The design basis flow runout event is a slow flow/power increase event which stabilizes at a new core power corresponding to the maximum possible core flow or may be terminated by a scram. Flow runout events are analyzed along a constant xenon flow control line assuming an equilibrium plant heat balance at each flow condition.

The results of this analysis are shown in Figure 4 of the current cycle core operating limits report (Reference 125). In the figure, the flow dependent MCPR limit is referred to as MCPR(F).

Reduced Power Considerations - ARTS

For power levels above the power level P-Bypass, the point where the reactor scram signals from turbine stop valve closure and turbine control valve fast closure are bypassed, a boundary transient severity trend [ΔCPR = f(P)] was established. Even with the transient severity increase included as a result of assuming constant core flow, large margins still exist between the required thermal limits and expected operating plant performance at lower power levels. Accordingly, above P-Bypass, bounding power dependent trend functions have been developed. 01511192

A conservative set of CPR limits were also established for operation below P-Bypass. To maximize operating flexibility CPR limits are provided for both high and low flows. Therefore, below P-Bypass, both high and low core flow sets of CPR operating limits are provided. No thermal monitoring is required below 25% power. For MNGP the average bundle power density at 25 percent of rated power is 1.0 MWt. The design limit for not monitoring thermal limits is an average bundle power < 1.2 MWt. This supports no thermal limit monitoring is required below 25 percent power (Reference 134 and 159). 01511192

Coastdown Considerations

Once the plant reaches an EHFP condition it may shutdown for refueling or it may be placed in a coastdown mode of operation. In this type of operation the control rods are typically held in the all-rods-out position and the plant is allowed to coastdown to a lower percent of rated power while maintaining flow within the allowable areas of the Power-Flow operating map.

Transient analyses are performed to bound the Power-Flow operating map at all cycle exposures including coastdown operation.

Refer to Section 3 for further discussion of operating limit thermal margins.

14.3.2 Calculation of MAPLHGR for Core Reload

Another Technical Specification limitation on plant operation is the Maximum Average Planar Linear Heat Generation Rate (MAPLHGR). MAPLHGR limits originate from and are associated with LOCA analyses (see Section 14.7.2).

For GE14 MAPLHGR limits calculated using GE/GNF methodology, removal of the previous Upper Bound Peak Cladding Temperature (UBPCT) 1600°F limitation (References 134 and 157) allows the LHGR setdown to be reduced. The power and flow dependent ARTS/MELLLA multipliers are sufficient to provide adequate protection for off-rated conditions for the ECCS-LOCA analysis in the MELLLA domain. The LHGR setdown value is increased by an additional 2.3 percent (12.3% total) in the MELLLA+/EFW domain to maintain equivalent Peak Clad Temperature (PCT) performance during LOCA events at full power with implementation in the COLR. The MAPLHGR value is set as determined by fuel operation limits and by ARTS considerations below for operation in the MELLLA domain. Operation in the MELLLA+/EFW domain at below rated power includes a 2.6% (12.6% total) reduction in MAPLHGR limits to maintain equivalent PCT performance during LOCA events as compared to the MELLLA domain with implementation in the COLR (Reference 192). For Single Loop Operation (SLO), which is allowed in the MELLLA operating domain only, a multiplier is applied to the two-loop MAPLHGR operating limits (Reference 184). 01511192 01511192 01511192

For an AREVA ATRIUM 10XM fuel, the MAPLHGR ECCS-LOCA limit is determined by applying the EXEM BWR-2000 Evaluation Model for the analysis of the limiting LOCA event (Reference 218). Power- and flow-dependent MAPLHGR multipliers are not required. Operation with only one recirculation loop (single-loop operation) requires that a MAPLHGR multiplier of 0.70 be applied to the two-loop operation MAPLHGR limit. Calculations confirm that the LOCA acceptance criteria in the Code of Federal Regulations (10 CFR 50.46) are met for operation at or below these MAPLHGR limits. 01511192

Reduced Flow Considerations - ARTS

Flow dependent MAPLHGR requirements which assure adherence to the fuel performance design bases were determined and are applicable for GE fuel. No multipliers are required for AREVA fuel. The flow dependent MAPLHGR factors ($MAPFAC_F$) are presented in the current cycle core operating limits report (Reference 125). These factors were derived such that the peak transient MAPLHGR during these events is not increased above the fuel design basis values. The $MAPMULT_F$ limit in the current cycle core operating limits report is derived from LOCA analysis and will be further discussed in Section 14.7.2. 01511192

Reduced Power Considerations - ARTS

For GE fuel, power dependent limits on MAPLHGR were generated below P-Bypass for both high and low core flow sets of $MAPFAC_P$ limits due to a significant sensitivity to initial core flow below P-Bypass using GE methods. No power-dependent limits are required for AREVA fuel analyzed with AREVA methods. 01511192

From the results of these transient evaluations, the MAPLHGR factor $MAPFAC_P$, which will assure compliance with the fuel performance design bases was determined. This limit is derived to assure that the peak transient MAPLHGR for any transient is not increased above the rated power fuel design basis transient values. The power dependent MAPLHGR factors ($MAPFAC_P$) are presented in the current cycle core operating limits report (Reference 125).

Application of MAPLHGR ARTS Curves for GE Fuel 01511192

The power dependent MAPLHGR curve uses the $MAPFAC_P$ multiplier as calculated from the equations found in the box of Figure 1 in the current cycle core operating limits report (Reference 125). Note that the core flow is a factor in determining which curve is used to calculate $MAPFAC_P$. The $MAPFAC_P$ multiplier is used in the following manner:

$$MAPLHGR_P = MAPFAC_P \times MAPLHGR_{STD}$$

where $MAPLHGR_P$ = the off power MAPLHGR limit.

$MAPFAC_P$ = the multiplier from current cycle core operating limits report.

$MAPLHGR_{STD}$ = fuel type specific standard MAPLHGR limits as determined by GE.

The flow dependent MAPLHGR curve uses the $MAPFAC_F$ multiplier as calculated from the equations found in the box of Figure 2 in the current cycle core operating limits report. The $MAPFAC_F$ multiplier is used in the following manner:

$$MAPLHGR_F = MAPFAC_F \times MAPLHGR_{STD}$$

where $MAPLHGR_F$ = the off flow MAPLHGR limit.

$MAPFAC_F$ = the multiplier from the current cycle core operating limits report.

$MAPLHGR_{STD}$ = fuel type specific standard MAPLHGR limits as determined by GE.

For any allowable off power and off flow condition, the MAPLHGR limit is the smaller of the values of $MAPLHGR_P$ and $MAPLHGR_F$.

The GE14 MAPLHGR limit is reduced for operation in the MELLLA+/EFW domain to maintain equivalent PCT performance to operation in the MELLLA domain during LOCA events. This setdown is implemented in the COLR and confirmed for future cycles. The peak LHGR setdown is imposed on the MNGP plant core as incorporated in the MAPLHGR limits to meet the Licensing Basis PCT target. (References 134, 156 and 157). 01511192

14.3.3 Calculation of LHGR for Core Reload

An additional Technical Specification limitation on plant operation is the Linear Heat Generation Rate (LHGR). The same flow dependent and power dependent multipliers that are applied to MAPLHGR standard limits are also applied to the LHGR standard limits. The current cycle core operating limits report (Reference 125) provides the LHGR standard limits and includes the flow and power dependent multipliers.

An LHGR setdown is imposed on GE fuel in the MNGP plant core to meet the Licensing Basis PCT target. (References 134, 156, and 157). 01511192

AREVA established power- and flow-dependent LHGR multipliers. LHGR multipliers are established to provide protection against fuel centerline melt and overstraining of the cladding during moderate frequency events initiated from off-rated conditions. LHGR multipliers are less than or equal to 1.0. An exposure dependent LHGR limit is established for each fuel design type (i.e. the same LHGR design limit is applicable to all ATRIUM 10XM fuel). The LHGR limit applicable when the core is operating at reduced core power is determined by multiplying the fuel design LHGR limit by the power dependent LHGR multiplier. Similarly, the LHGR limit applicable when the core is operating at reduced core flow is determined by multiplying the fuel design LHGR limit by the flow dependent LHGR multiplier. When the core is operating at reduced core power and reduced core flow, the LHGR limit for these conditions is the lower of the LHGR limit applicable for the reduced core power and the LHGR limit applicable for the reduced core flow. 01511192

14.3.4 Power to Flow Operating Map

The standard power/flow map as described in Figure 3.2-1 defines the region of normal plant operations. This includes the region which was added to increase operational flexibility which is an expansion of the power/flow map as defined in the FSAR (Figure 3.2-3) and the Extended Load Line Limit region as defined in Reference 66. The Maximum Extended Load Line Limit Analysis (MELLLA) was performed by GE (Reference 71). The analysis expands the allowable operating domain to the MELLL rod line. Subsequent to MELLLA, an Increased Core Flow (ICF) analysis was performed (Reference 74) which further expanded the power/flow map to areas with core flows larger than the rated value of 57.6 x 10^6 lb/hr.

The expansion of the power/flow map into the ICF region was originally accomplished under Reference 74. Extended Power Uprate operation at 2004 MWt into the ICF region of the power/flow map was evaluated and determined to be acceptable (References 134 and 160). 01511192

NRC approved a transition to AREVA ATRIUM 10XM fuel and AREVA safety analysis methods in Reference 220.

The operating domain was also expanded to include the Maximum Extended Load Line Limit Analysis Plus (MELLLA+) region. The expansion involved a comprehensive safety analysis (Reference 182) that was approved by the NRC (Reference 184). The scope of the safety analysis included generic evaluations in accordance with the MELLLA+ Licensing Topical Report (Reference 185) that apply to MNGP and certain plant-specific analysis including operation in the ICF region. All lines on the Power to Flow map, other 01511192

than those associated with the MELLLA+ expansion, are unchanged by MELLLA+. The existing MELLLA boundary is used to establish the operating domain for core flows outside of the MELLLA+ and ICF regions. Single Loop Operation (SLO), is allowed in the MELLLA region only. With the transition to AREVA fuel and methodologies, a power-flow map region designated as the Extended Flow Window (EFW) was created. The boundaries of the EFW region are exactly the same as for MELLLA+, so prior non-fuel-dependent analyses for MELLLA+ remain applicable. See USAR section 3.2.6 for a description of the MELLLA+/EFW region of the power-flow map. 01511192

14.4 Transient Events Analyzed for Core Reload

According to transient analysis performed for the initial licensing for Monticello, plant system disturbances caused by single operator error or a single equipment malfunction can be assigned to one of eight separate categories.

(1) Nuclear system pressure increase - threatens to rupture the reactor coolant pressure boundary from internal pressure. Also a pressure increase collapses the voids in the moderator. This causes an insertion of positive reactivity which may result in exceeding the fuel cladding safety limits.

(2) Reactor vessel water (moderator) temperature decreases - results in an insertion of positive reactivity as density increases. Positive reactivity insertions threaten the fuel cladding safety limits because of higher power.

(3) Positive reactivity insertion - is possible from causes other than nuclear system pressure or moderator temperature changes. Such reactivity insertions threaten the fuel cladding safety limits because of higher power.

(4) Reactor vessel coolant inventory decrease - threatens the fuel as the coolant becomes unable to maintain nucleate boiling.

(5) Reactor core coolant flow decrease - threatens the fuel cladding safety limits as the coolant becomes unable to maintain nucleate boiling.

(6) Reactor core coolant flow increase - reduces the void content of the moderator, resulting in a positive reactivity insertion. The resulting high power may exceed fuel cladding safety limits.

(7) Core coolant temperature increase - could exceed fuel cladding safety limits.

(8) Excess of coolant inventory - could result in damage resulting from excessive carry-over.

In order to address all of the credible transient events in these eight categories, the initial operating license for Monticello was based on the analysis of 16 FSAR events, each assignable to one of the above categories. In this manner, the most severe transient events relative to LHGR, CPR, and Reactor Coolant System pressure were identified. The relative and absolute severity of the consequences of the events are generally cycle specific. Most of the events result in fairly mild plant disturbances. Only a few events are severe enough to be potentially limiting. Although the most limiting event differs from reload-to-reload, experience shows that the most limiting transient comes from the same selected group of transient events.

The original FSAR transient analysis was migrated to the GE methodology for transient analysis as referenced in Core Operating Limits Report (COLR). The adoption of the GE methodology resulted in some refinement of event classification, reload transient analysis and the addition of stability transients. As approved by the NRC in Amendment 188 (Reference 199), transient analysis is now performed using AREVA methods. The core operating limits are developed using NRC approved methodology referenced in the COLR. 01511192

The need to analyze various Anticipated Operational Occurrences (AOOs) as part of a reload safety analysis has been generically defined. 01511192

The limiting events that are within the typical core reload evaluation scope are discussed in Reference 106 and in Section 3.1.5 of Reference 184 for the MELLLA+ operating domain. The MELLLA+ evaluation included a review of Anticipated Operational Occurrences (AOO) transients and reported the results in Chapter 9 of the SAR (Reference 182). The result of this evaluation is that most transient analyses are either unaffected by the MELLLA+ operating domain extension or are bounded by other analyses. The AOOs analyzed in the SAR for the MELLLA+ domain extension include the following:

- Generator Load Rejection Without Bypass (LRNBP)
- Turbine Trip with Bypass (TTWBP)
- Turbine Trip Without Bypass (TTNBP)
- Feedwater Controller Failure (Maximum Demand) (FWCF)
- Loss of Feedwater Heater (LFWH)

These AOOs were evaluated at 2004 MWt and two flows: the increased core flow (ICF) limit of 105 percent and the MELLLA+ reduced core flow limit of 80 percent. The comparisons show that for all cases, the ICF conditions are more limiting, indicating no impact for MELLLA+ operation on delta-CPR.

See USAR Section 14A for the transients that are analyzed in the current cycle analysis. This section classifies each transient by type.

The Loss of Feedwater Flow event (LOFW) is not a reload transient but was evaluated in the MELLLA+ Safety Analysis Report in accordance with generic licensing requirements for power uprates. The results demonstrated that the RCIC system is capable of maintaining the water level inside the shroud above the top of active fuel during the LOFW transient. (Reference 182)

The Control Rod Withdrawal Error from Subcritical or Low Power Startup was generically dispositioned in the MELLLA+ Safety Analysis Report and is discussed in USAR sections 7.3.4.3 and 14.4.3. (Reference 182)

Descriptions of certain limiting events are given below. The analytical results of the most limiting transient in each of the above types of events is provided in the reload licensing analysis. Input parameters and plant initial conditions used in the transient analysis for the current reload are listed in Section 14A. 01511192

Reference 207 describes transient analyses performed using AREVA methodology. AREVA transient event analysis is for similar events and with a similar approach as GE methodology, but with different computer models and codes and with analysis inputs specific to those models and codes. As is common for fuel vendor transitions, when "mixed core" transient analyses are performed, the fuel vendor for the "new" reload fuel performs licensing analyses that cover the entire core. Thus, when the first AREVA fuel reload is operated, the licensing analysis for that cycle will have been performed by AREVA.

Reference 207 includes two major types of results. One is a "Disposition of Events" (DOE). The DOE reviewed each applicable section of the USAR to determine the impact of AREVA fuel on that section. The DOE determined whether no re-analysis was required, whether cycle-specific analysis was required, or whether initial-licensing-only analysis was required. More specifically, the DOE concluded one of the following:

1) No further analysis required. This classification may result from one of the following:

   - The consequences of the event have been previously shown to be bounded by consequences of a different event and the introduction of a new fuel design and transition to EFW conditions does not change that conclusion.

   - The consequences of the event are benign, i.e., the event causes no significant change in margins to the operating limits.

   - The event is not affected by the introduction of a new fuel design, transition to EFW conditions and/or the current analysis of record remains applicable.

2) Address event each following reload. The consequences of the event are potentially limiting and need to be addressed each reload.

3) Address event for initial licensing analysis. This classification may result from one of the following:

   - The analysis is performed using conservative bounding assumptions and inputs such that the initial licensing analysis results for EFW will remain applicable for following reloads of the same fuel design (ATRIUM 10XM).

   - Results from the initial licensing analysis will be used to quantitatively demonstrate that the results remain applicable for following reloads of the same fuel design because the consequences are benign or bounded by those of another event.

The second type of results described in Reference 207 are descriptions and conclusions of initial licensing analysis (item 3) above) and cycle-specific results for a representative core (item 2) above). The process of using a representative core for licensing fuel transitions has precedent. The precedent recognizes that a representative core design is adequate for the purposes of: (1) demonstrating the core design meets the applicability requirements of the new analysis methods, (2) demonstrating that the results can meet the proposed safety limits, and (3) demonstrating either existing Technical Specifications do not need to be revised for the fuel transition or that needed revisions are identified. The representative core design for these analyses assures the actual core design meets all these objectives. When the first actual reload of AREVA fuel is operated, the applicable cycle-specific licensing analyses will have been updated for the then-current core loading and the Core

01511192

Operating Limits Report (COLR) for cycles including AREVA fuel will include applicable limits to ensure safe core operation. 01511192

14.4.1 Generator Load Rejection Without Bypass

Fast closure of the turbine control valves is initiated whenever electrical grid disturbances occur which result in significant loss of load on the generator. The turbine control valves are required to close as rapidly as possible to prevent overspeed of the turbine generator rotor. The closing causes a sudden reduction of steam flow which results in a nuclear system pressure increase. The reactor is scrammed by the fast closure of the turbine control valve.

14.4.1.1 Starting Conditions and Assumptions

The following plant operating conditions and assumptions form the principal basis for which reactor behavior is analyzed during a load rejection.

(1) The reactor and turbine generator are initially operating at full power when the load rejection occurs.

(2) All of the plant control systems continue normal operation

(3) Auxiliary power is continuously supplied at rated frequency.

(4) The reactor is operating in the manual flow control mode when load rejection occurs.

(5) The turbine bypass valve system is failed in the closed position.

14.4.1.2 Event Description

Complete loss of the generator load produces the following sequence of events:

(1) The power/load unbalance device steps the load reference signal to zero and closes the turbine control valves at the earliest possible time. The turbine accelerates at a maximum rate until the valves start to close.

(2) Reactor scram is initiated upon sensing control valve fast closure.

(3) If the pressure rises to the pressure relief set point, part or all of the relief valves open, discharging steam to the suppression pool.

14.4.1.3 Acceptance Criteria

The acceptance criteria for this transient are based on General Design Criteria (GDC) 10 and 26 for fuel design limits and GDC 15 with respect to reactor coolant pressure limits. This means the CPR for the transient is greater than the safety limit and the pressure in the RCS is less than 110% of the design pressure.

14.4.1.4 Main Physics Parameters

The core behavior of interest is the pressure increase which causes the collapse of steam voids with the corresponding increase in neutron flux level. The increase in power is curtailed by the Doppler feedback and reactor scram. Thus, the main physics parameters of interest are the void coefficient, Doppler coefficient and scram worth.

14.4.1.5 Event Results

Results of the analysis for this transient for the current cycle are shown in Section 14A.

14.4.2 Loss of Feedwater Heating

A loss of feedwater heating transient can occur as a result of a loss of extraction steam to a feedwater heater or from inadvertent actuation of high pressure coolant injection which delivers relatively cool water to the reactor through the feedwater sparger. Loss of feedwater heating results in a core power increase due to the increase in core inlet subcooling. If the neutron power exceeds the reactor trip setpoint, a scram occurs; otherwise the system settles to a steady state higher power condition until the operator intervenes.

14.4.2.1 Starting Conditions and Assumptions

The following plant operating conditions and assumptions form the principal basis for which reactor behavior is analyzed during the loss of feedwater heating transient:

(1) The plant is operating at full power.

(2) The plant is operating in the manual flow control mode.

14.4.2.2 Event Description

Feedwater heating can be lost in at least two ways:

(1) Steam extraction line to heater is closed.

(2) Feedwater is bypassed around heater.

(3) Inadvertent actuation of high pressure coolant injection.

The first case produces a gradual cooling of the feedwater. In the second case the feedwater bypasses the heater and no heating of the feedwater is generated. In the third case cool water is injected in the reactor through the feedwater sparger. In any of these cases the reactor vessel receives cooler feedwater. The maximum number of feedwater heaters which can be tripped or bypassed by a single event represents the most severe transient for analysis considerations. This event of an instantaneous loss of the feedwater heating capability of the plant causes an increase in core inlet subcooling. This increases core power due to the negative void reactivity coefficient.

In any case power would increase at a very moderate rate. If power exceeded the normal full power flow control line, the operator would be expected to insert control rods to return the power and flow to their normal range. If this were not done the neutron flux could exceed the scram set point where a scram would occur.

14.4.2.3 Acceptance Criteria

The acceptance criteria for this transient are based on GDC 10, 15 and 26. The relevant criteria is the maintenance of the fuel cladding integrity by ensuring that the CPR remains above the safety limit.

14.4.2.4 Main Physics Parameters

The core behavior of interest is the increase in inlet subcooling and the subsequent reduction in core voids which result in an increase in core power. The increase in power is curtailed by the Doppler feedback and in some cases by a reactor scram. Thus, the main physics parameters of interest are the void coefficient, Doppler coefficient and scram worth if a scram occurs.

14.4.2.5 Event Results

Results of the analysis for this transient for the current cycle are shown in Section 14A.

14.4.3 Rod Withdrawal Error

The current Rod Block Monitor (RBM) system for Monticello with power dependent setpoints was analyzed for the rod withdrawal error (RWE) using a statistical analysis approach.

14.4.3.1 Starting Conditions and Assumptions

The reactor operator has followed procedures and up to the point of the withdrawal error is in the normal mode of operation (i.e., the control rod pattern, flow set points, etc., are all within normal operating limits).

14.4.3.2 Event Description

For a RWE, it is assumed that the reactor is in a normal mode of operation and the operator makes a procedural error resulting in an uncontrolled withdrawal of the maximum worth control rod. The positive reactivity insertion causes the average core power to increase. More importantly, the local power in the vicinity of the withdrawn control rod will increase and could potentially cause cladding damage due to either overheating which may accompany the occurrence of boiling transition or by exceeding the 1% plastic strain limit imposed on the cladding, which are the assumed transient failure thresholds.

The control rod withdrawal is terminated either by the rod being fully withdrawn or by the RBM. The feedback from the voids and fuel temperature will limit the power increase and following termination of the control rod withdrawal a new equilibrium power level will be reached unless a reactor trip setpoint is reached.

Approximate Elapsed Time from Start of Rod Motion	Event
0	(1) Event begins, operator selects the control rod, acknowledges any alarms and withdraws the rod at the maximum rod speed.
≤5 seconds	(2) Core average power and local power increase.
≤30 seconds	(3) Event ends - rod block by RBM

Identification of Operator Actions:

Under most normal operating conditions, no operator action will be required since the transient which will occur will be very mild. If the peak linear power design limits are exceeded, the official core monitor will display the abnormal condition, and the operator will take appropriate action to rectify the situation.

If the rod withdrawal error is severe enough, the Rod Block Monitor (RBM) system will sound alarms, at which time the operator must acknowledge the alarm and take corrective action. Even for extremely severe conditions (i.e., for highly abnormal control rod patterns, operating conditions, and assuming that the operator ignores all alarms and warnings, and continues to withdraw the control rod), the RBM system will block further withdrawal of the control rod before exceeding either the OLMCPR or the 1% plastic strain limit.

14.4.3.3 Acceptance Criteria

The acceptance criteria for this transient are based on GDC 10, 20, and 25. The fuel design criteria are met when the CPR for the transient is greater than the safety limit and when the uniform cladding strain does not exceed 1%.

14.4.3.4 Main Physics Parameters

The core behavior of interest is the reactivity addition by a single rod with the corresponding increase in local power. The feedback from the voids and fuel temperature will limit the power increase and following termination of the control rod withdrawal a new equilibrium power level will be reached unless a reactor trip setpoint is reached.

14.4.3.5 Event Results

Results of the analysis for this transient for the current cycle are shown in Section 14A.

14.4.4 Feedwater Controller Failure - Maximum Demand

The feedwater controller is assumed to fail in such a manner as to cause an increase in feedwater flow and thus increasing the core coolant inventory and decreasing the coolant temperature. The most severe event is a feedwater controller failure during maximum flow demand in manual flow control mode. The influx of excess feedwater flow results in an increase in core subcooling which reduces the void fraction and thus induces an increase in reactor power. The excess feedwater flow also results in a rise in the reactor water level which eventually leads to high water level trip setpoint being exceeded causing a turbine trip, feedwater pump trip and a subsequent reactor scram due to turbine stop valve closure. The transient is mitigated by opening the turbine bypass valves and the safety/relief valves.

14.4.4.1 Starting Conditions and Assumptions

The following plant operating conditions and assumptions form the principal basis for which reactor behavior is analyzed during a feedwater controller failure.

a. Feedwater controller fails during maximum flow demand.

b. Maximum feedwater pump run-out is assumed.

c. The reactor is operating in a manual flow control mode which provides for the most severe transient.

14.4.4.2 Event Description

A feedwater controller failure during maximum demand produces the following sequence of events:

a. The reactor vessel receives an excess of feedwater flow.

b. The excess flow results in an increase in core subcooling, which results in a rise in core power and reactor vessel water level.

c. The rise in the reactor vessel water level eventually leads to high water level turbine trip, feedwater pump trip and reactor scram due to turbine stop valve closure.

d. The transient is mitigated by opening the turbine bypass valves and the safety/relief valves.

14.4.4.3 Acceptance Criteria

The acceptance criteria for this transient are based on GDC 10, 15 and 26. The relevant criterion is the maintenance of the fuel cladding integrity by ensuring that the CPR remains above the safety limit.

14.4.4.4 Main Physics Parameters

The core behavior of interest is the increase in core subcooling due to the increased feedwater flow which causes a decrease in the core voids which results in an increase in core power. The increase in core power is curtailed by the Doppler feedback and the transient results in a reactor scram. Thus, the main physics parameters of interest are the void coefficient, Doppler coefficient and scram worth.

14.4.4.5 Event Results

The influx of excess feedwater flow results in an increase in core subcooling which reduces the void fraction and thus induces an increase in reactor power. The excess feedwater flow also results in a rise in the reactor water level which eventually leads to high water level; main turbine and feedwater trip and turbine bypass valves are actuated. Reactor scram trip is actuated from main turbine stop valve position switches. Relief valves open as steamline pressures reach relief valve setpoints.

Results of the analysis for the current cycle are shown in Section 14A.

14.4.5 Turbine Trip Without Bypass

This transient is similar to the generator load rejection without bypass in that it results in a nuclear system pressure increase. The transient is initiated from a high power level without turbine bypass valves opening following closure of the turbine stop valves. The stop valve closure results in a scram and the primary system relief valves open to limit the pressure increase. For the case of bypass valves opening, the transient is less severe.

14.4.5.1 Starting Conditions and Assumptions

The following plant operating conditions and assumptions form the principal basis for which reactor behavior is analyzed during turbine trip without bypass.

(1) The reactor and turbine generator are initially operating at full power.

(2) All of the plant control systems continue normal operation.

(3) Auxiliary power is continuously supplied at rated frequency.

(4) The reactor is operating in the manual flow control mode.

(5) The turbine bypass valve system is failed in the closed position.

14.4.5.2 Event Description

Turbine trip without bypass produces the following sequence of events:

(1) The turbine trip initiates a reactor scram on stop valve closure.

(2) If the pressure rises to the pressure relief set point, part or all of the relief valves open, discharging steam to the suppression pool.

14.4.5.3 Acceptance Criteria

The acceptance criteria for this transient are based on GDC 10 and 26 for fuel design limits and GDC 15 with respect to reactor coolant pressure limits. This means the CPR for the transient is greater than the safety limit and the pressure in the RCS is less than 110% of the design pressure.

14.4.5.4 Main Physics Parameters

The core behavior of interest is the pressure increase which causes the collapse of steam voids with the corresponding increase in neutron flux level. The increase in power is curtailed by the Doppler feedback and reactor scram. Thus, the main physics parameters of interest are the void coefficient, Doppler coefficient and scram worth.

14.4.5.5 Event Results

Results of the analysis for this transient for the current cycle are shown in Section 14A.

14.5 Special Events

Special events are those items that need to be analyzed to meet a licensing requirement as part of a reload safety evaluation but do not fit into the abnormal transient or accident categories. The special events to be analyzed are:

(1) Overpressure Protection - MSIV Closure

(2) Standby Liquid Control System Shutdown Margin

(3) Stuck Rod Cold Shutdown Margin

In this section, each event is described and the acceptance criteria is given.

14.5.1 Vessel Pressure ASME Code Compliance Model

01511192

The pressure relief system was designed to prevent excessive overpressurization of the primary system process barrier and the pressure vessel and thereby preclude an uncontrolled release of fission products.

The vessel overpressure protection system was designed to satisfy the requirements of Section III, Nuclear Vessels, of the ASME Code, 1965 edition (Reference 90). The ASME Code, Section III, for Class I vessels permits pressure transients up to 10% over design pressure, and requires that the nominal setpoint of at least one safety or relief valve be not greater than the vessel design pressure and the setpoint of any additional required valves be not greater than 105% of the vessel design pressure. Section III of the code allows credit to be taken for the scram protection system as a pressure protection device when determining the required safety valve capacities for nuclear vessels. The code required the reactor pressure vessel to be designed to accommodate the normal operating loads and transient startup/shutdown and test cyclic loads expected during the 40-year life of the plant.

The two potentially limiting events for the ASME overpressure are the main steam isolation valve (MSIV) closure and the turbine stop valve (TSV) closure. Either event can be initiated by various plant conditions or by various operation actions. Normally, as the MSIVs close, a reactor scram is initiated by position switches which sense closure. Similarly, as the TSVs close, a reactor scram is initiated by position switches which sense closure, although the TSV scram is bypassed at approximately 25% power based on the first stage turbine pressure. The TSV event from derated conditions (i.e., when the TSV scram is bypassed) is non-limiting compared to the event initiated from high power conditions. As the system isolates, pressure rises in the vessel until the safety/relief valves open to mitigate the event. Sensitivity evaluations indicate that peak pressure in the reactor vessel occurs when the ATWS-RPT (Anticipated Transient Without Scram – Recirculation Pump Trip) trips the recirculation pumps because the power increase due to void collapse is slowed due to less flow from the recirculation pumps. The event assumes initiating conditions of 1040 psia, 102% power, failure of the position switch scram, and failure of the turbine bypass valves. The evaluation assumed that only five of the eight valves are operable and that they open at 1145 psig (Reference 228), which is a little over 103% of the valves' stamped setpoint of 1109 psig.

01511192

The acceptance criteria for this transient are based on GDC 10, 15 and 26. The main criteria is to demonstrate compliance with the ASME Code by showing that the pressure in the reactor vessel remains below 110% of the design value and attached piping systems remain below 120% of design values.

The reactor vessel pressure limit is 1375 psig (110% of design). The piping attached to the bottom head has a limit of 1363.2 psig (120% of design). The recirculation pump discharge piping has a limit of 1497.6 psig (120% of design). ATWS RPT is not credited for the evaluation of reactor recirculation pump discharge piping because peak piping pressure occurs without ATWS-RPT. The recirculation pump suction piping has a limit of 1377.6 psig (120% of design). The steam piping to the outboard MSIV has a limit of 1332 psig (120% of design). Compliance with a steam dome limit of 1332 psig ensures that pressures in the reactor vessel and attached piping remain below their respective limits.

The core behavior of interest is the initial pressure surge caused by the valve closure which in turn collapses voids causing a neutron flux spike. The reactor is scrammed due to high neutron flux or high reactor pressure, whichever occurs first. The Doppler feedback also contributes to limiting the power spike. Results of this event for the current cycle are provided in Section 14A. 01511192

14.5.2 Standby Liquid Control System Shutdown Margin

The design objective of the Standby Liquid Control System is to provide the capability of bringing the reactor to a sub-critical condition at any time in the cycle during the most reactive xenon-free state with all the control rods in the full-out condition.

To meet this objective, the Standby Liquid Control System is designed to inject a quantity of boron which produces an equivalent concentration of at least 660 ppm of natural boron in the reactor core in less than 125 minutes.

The requirements of this system are primarily dependent on the reactor power level along with the reactivity effects of voids and temperature between the hot full power and cold xenon-free condition. The calculations show that the Standby Liquid Control System has sufficient shutdown margin for the current cycle. These results are provided in Section 14A.

14.5.3 Stuck Rod Cold Shutdown Margin

Shutdown margin is the amount by which the reactor is subcritical with the most reactive control rod in its fully withdrawn position and all other rods fully inserted. The shutdown margin is calculated throughout the cycle for the most reactive core condition which is at the most reactive temperature of ≥ 68F and xenon free. Advanced fuel designs (e.g. ATRIUM 10XM) can be more reactive at temperatures greater than 68F for some exposures. 01511192

The shutdown margin is a limiting condition for operation (LCO) as specified in the Monticello Technical Specifications. The shutdown margin is required to be verified within limits prior to each in vessel fuel movement during fuel loading sequence and once within 4 hours after criticality following fuel movement within the reactor pressure vessel or control rod placement.

A three dimensional Boiling Water Reactor Simulator code was utilized to calculate the stuck rod cold shutdown margin. The calculations show that with the high worth rod out during the current cycle, the core has sufficient shutdown margin. The stuck rod cold shutdown margin results for the current cycle are provided in Section 14A.

14.6 Plant Stability Analysis

The stability licensing basis for U.S. nuclear power plants is set forth in GDC-12. NRC Generic Letter 94-02 (Reference 91) requested licensees take actions to ensure compliance with GDC-12. GDC-12 requires assurance that power oscillations which can result in conditions exceeding specified acceptable fuel design limits are either not possible or can be reliably and readily detected and suppressed. In response to NRC Bulletin 88-07 (Reference 92), the BWR Owners' Group, in conjunction with General Electric, implemented a program to develop long-term solutions to the stability issue. 01511192

Upon introduction of AREVA fuel the long term stability solution is Enhanced Option III (EO-III) as described in the approved topical report ANP-10262 (Reference 78), which is based on the Owner's Group solution created in response to NRC bulletin 88-07 (Reference 92).

Per Reference 78 the hardware implementation, implementation of the channel instability exclusion trip, and specific method of providing automatic stability backup in the event of OPRM failure are plant specific and must be NRC-approved. The hardware implementation at Monticello uses the previously installed Power Range Neutron Monitoring System (PRNMS), which was approved for use at Monticello in License Amendment 159. (Reference 149) The use of PRNMS hardware was approved by the NRC for EO-III in License Amendment 191. (Reference 189) The Monticello implementation of the channel instability exclusion trip and automatic stability backup is the creation of the Extended Flow Window Stability (EFWS) trip. The method used to develop the trip is documented in EE 25987, "Calculational Framework for the Extended Flow Window Stability (EFWS) Setpoints" (Reference 79), which was approved by the NRC in License Amendment 191. (Reference 189)

01511192

EO-III has three main automatic trip protective features: an OPRM trip from the Period Based Detection Algorithm (PDBA), a power-flow region where operation is prohibited via a reactor trip due to the possibility of single channel instabilities, and a backup trip that will automatically trip the reactor upon high power-low flow conditions if the primary OPRM trip is inoperable.

The EO III solution combines closely spaced LPRM detectors into "cells" to effectively detect core−wide or regional (local) modes of reactor instability. These cells are termed Oscillation Power Range Monitor (OPRM) cells and are configured to provide local area coverage with multiple channels. EO III uses the PRNMS hardware to combine the LPRM signals and to evaluate the cell signals with instability detection algorithms. The Period Based Detection Algorithm (PBDA) is the only algorithm credited in the Option III licensing basis. Two defense−in−depth algorithms, referred to as the Amplitude Based Algorithm (ABA) and the Growth Rate Based Algorithm (GRBA), offer a high degree of assurance that fuel failure will not occur as a consequence of stability related oscillations. EO III provides SLMCPR protection by generating a reactor scram if a reactor instability, which exceeds the specified trip setpoint, is detected. Settings are established per Reference 78 each cycle and are input into the OPRM software. These are settings in the OPRM software and no firmware change is required to perform these setting changes. While the OPRM settings are calculated each cycle, the settings are not highly dependent on the neutronic fuel type. The EO III OPRM trip is armed only when plant operation is within the EO III OPRM trip−enabled region. The EO III OPRM trip−enabled region is generically defined as the region on the power/flow map with power ≥ 25% of RTP and recirculation drive flow < 60% of rated drive flow.

The single channel instability exclusion region (CIER) is protected by a setdown of the APRM Simulated Thermal Power (STP) trip setpoint. During operation in the CIER, a single fuel channel can become thermal-hydraulically unstable, which cannot be detected by the PBDA and results in invalid transient analysis results. In order to preserve the validity of the transient analysis and ensure that plant operation takes place in a power-flow region that can be adequately protected by the OPRMs, operation within the CIER is prohibited. The CIER is determined by AREVA as part of the reload calculations each cycle. Setpoint methodology is used to protect the CIER.

The backup trip also sets down the APRM STP trip setpoint; per Reference 78, the backup trip must protect the natural circulation line (NCL) and stability Region I. The Monticello backup trip implementation protects the NCL down to the intersection of Region I and the NCL and all of Region I. Protection of Region I does not utilize full setpoint methodology. This implementation was approved by the NRC in License Amendment 191. (Reference 189) In order to preclude the need to change the setdown on the STP setpoint when OPRMs are declared inoperable, the setdowns for CIER protection and the backup trip were combined into a single EFWS trip setpoint. The EFWS setpoint is not dependent on the number of recirculation pumps in operation because single loop operation is not allowed in the EFW region.

The EFWS trip is enabled at different power levels depending on the operability of the OPRMs. If OPRMs are operable, EFWS is enabled when power is at or above 70% in order to ensure that plant operation within the CIER cannot occur. If OPRMs are inoperable, EFWS is enabled when power is at or above the intersection of Region I and the NCL. This power level is cycle-specific (the exact boundaries of Region I vary slightly from cycle to cycle) and reported in the COLR. The EFWS setpoint is potentially cycle specific because both the boundary of Region I and the CIER are cycle specific. The boundaries of Region I and the CIER are calculated each cycle and the EFWS setpoints are either confirmed to be acceptable, or revised each cycle per the core reload process.

In addition to the automatic protective features, EO-III also uses Backup Stability Regions I and II as described in Reference 78. As described in L-MT-15-065 (Reference 88), the actions to be taken in the event that the OPRMs are declared inoperable are those methods listed in OG 02-0119-260, “Backup Stability Protection (BSP) for Inoperable Option III Solution” (Reference 93). The BSP evolved from the stability interim corrective actions (ICAs), which restrict plant operation in the high power, low core flow region of the power/flow operating map. The ICAs provide guidance which reduces the likelihood of an instability event by limiting the period of operation in regions of the power and flow map most susceptible to thermal hydraulic instability. The ICAs also specify operator actions, which are capable of detecting conditions consistent with the onset of oscillations, and additional actions, which mitigate the consequences of oscillations consistent with degraded thermal hydraulic stability performance of the core.

01511192

14.7 Accident Evaluation Methodology

As stated in Section 14.3, abnormal operating transients are evaluated to determine a plant normal operating MCPR limit. In addition to these analyses, evaluations of less frequent postulated events are made to ensure an even greater depth of safety. Accidents are events which have a projected frequency of occurrence of less than once in every one hundred years for every operating BWR. The broad spectrum of postulated accidents is covered by six categories of design basis events. These events are the control rod drop, loss of coolant accident, main steam line break, fuel assembly loading accidents, recirculation pump seizure, and refueling accident. A description of each of these events follows.

Current Monticello cores include both GE14 and AREVA ATRIUM 10XM fuel. Core loadings that have bundle designs from more than one fuel supplier are called “transition cores”. The Operating Limit Critical Power Ratio (OLCPR) for a transition core (reference Section 14.3) is calculated using AREVA methodology. The Linear Heat Generation Rate (LHGR) and Maximum Average Planar Linear Heat Generation Rate (MAPLHGR) limits are calculated independently of the cycle-specific core loading, using each fuel supplier's

01511192

approved methodology for fuel it supplied. The following sections that describe the results of particular accident analyses will describe both fuel suppliers' methodologies whenever necessary because of the retention of particular GE14 methodologies through the period of transition cores. 01511192

The design basis accident radiological consequences analyses were performed using the Alternative Source Term methodology provided in Regulatory Guide 1.183 (Reference 129). Regulatory limits for dose consequences are specified in 10CFR50.67. Control room operator accident dose limits are also specified in GDC19 of 10CFR50 Appendix A. Offsite (EAB and LPZ) accident dose limits in 10CFR50.67 are supplemented by individual accident dose limits (adjusted for accident probability) specified in RG 1.183. Control room operator and LPZ (Low Population Zone) doses are calculated for the duration of the accident. EAB (Exclusion Area Boundary) doses are calculated as the worst 2-hour dose for the accident period.

The radiological consequences of LOCA inside containment, MSLBA, ILBA, CRDA and FHA are bounded by the evaluation in the MELLLA domain and need not be reevaluated for the MELLLA+/EFW domain. The radiological results for all accidents remain below the applicable regulatory limits for the plant for operation in the MELLLA+/EFW domain (Reference 182). 01511192

Atmospheric dispersion coefficients (X/Q) were calculated based on site meteorological data from 1998-2002. These coefficients are shown in USAR Table 14.7-23 and in the individual accident sections.

The post-operation radiation sources in the core are primarily the result of accumulated fission products. Two separate forms of post-operation source data are normally applied. The first of these is the core gamma-ray source, which is typically used in shielding calculations for the core and for individual fuel bundles. This source term is defined in terms of MeV/sec per Watt of reactor thermal power (or equivalent) at various times after shutdown.

The second set of post-operation source data consists primarily of nuclide activity inventories for fission products in the fuel. These data are needed for post-accident evaluations, which are performed in compliance with regulatory guidance that applies different release and transport assumptions to different fission products. The core fission product inventories for these evaluations are based on an assumed fuel irradiation time, which develops equilibrium activities in the fuel (typically 3 years). Most radiologically significant fission products reach equilibrium within a 60-day period. The radionuclide inventories are determined in terms of Curies per megawatt of reactor thermal power at various times after shutdown. See Section 2.9.1 of NEDC-33322P (Reference 160).

The core source term for radiological accident analysis was developed using ORIGEN, Isotope Generation and Depletion Code Matrix Exponential Method. The core isotope inventory was generated from the ORIGEN source term with the exception of Co-58 and Co-60 which were obtained from the BWR default source term values from Table 1.4.3.2-3 of NUREG/CR-6604 (Reference 166). GE14 fuel was analyzed as both 35 GWD/MT core average exposure and 37 GWD/MT core average exposure. The inventories assocated with these GE14 fuel cores are shown in USAR Tables 14.7-24a and 14.7-24c, respectively. ATRIUM 10XM fuel was analyzed at 37 GWD/MT core average exposure and the core inventory is shown in USAR Table 14.7-24c. 01511192

Core inventory was developed assuming a power level of 2004 MWt, increased by 2% to account for power measurement uncertainties.

14.7.1 Control Rod Drop Accident Evaluation

The accidents that result in releases of radioactive material from the fuel with the reactor primary system, primary containment, and secondary containment initially intact are the results of various failures of the control rod drive system. Examples of such failures are collet finger failures in one control rod drive mechanism, a control rod drive system pressure regulator malfunction, and a control rod drive mechanism ball check valve failure. None of the single failures associated with the control rods or the control rod system result in a greater release of radioactive material from the fuel than the release that results when a single control rod drops out of the core after being disconnected from its drive and after the drive has been retracted to the fully withdrawn position. Thus, this control rod drop accident is established as the design basis accident for the category of accidents resulting in radioactive material release from the fuel with all other barriers initially intact.

There are many ways of inserting reactivity into a boiling water reactor; however, most of them result in a relatively slow rate of reactivity insertion and therefore pose no threat to the system. It is possible, however, that a rapid removal of a high worth control rod could result in a potentially significant excursion; therefore, the accident which has been chosen to encompass the consequences of a reactivity excursion is the Control Rod Drop Accident (CRDA).

The dropping of the rod results in a high local reactivity in a small region of the core and for large, loosely coupled cores, significant shifts in the spatial power generation during the course of the excursion.

The key reactivity feedback mechanism affecting the shutdown of the initial prompt power burst is the Doppler coefficient. Final shutdown is achieved by scramming all but the dropped rod.

AREVA safety analyses are performed each reload to evaluate the CRDA to verify that the accident will not result in fuel pellet deposited enthalpy greater than 280 calories per gram and to determine the number of rods exceeding the 170 calories per gram failure threshold. For Monticello, the analysis verifies that deposited enthalpy remains below 230 cal/gm. Consequences of the CRDA are evaluated to confirm that the acceptance criteria are satisfied. (Reference 207) 01511192

14.7.1.1 Sequence of Events

The sequence of events and approximate time of occurrence for this postulated accident are described below.

	Event	Approximate Elapsed Time
(a)	Reactor is at a control rod pattern corresponding to maximum incremental rod worth.	
(b)	Rod worth minimizer or operators are functioning within constraints of banked position withdrawal sequence (BPWS) (References 17 and 127). The control rod that will result in the maximum incremental reactivity worth addition at any time in core life under any operating condition while employing the BPWS becomes decoupled from the control rod drive.	
(c)	Decoupled control rod sticks in the fully inserted position.	
(d)	Operator selects and withdraws the drive of the decoupled rod along with the other control rods assigned to the banked-position group such that the proper core geometry for the maximum incremental rod worth exists.	
(e)	Control rod becomes unstuck and drops at the maximum velocity determined from experimental data (3.11 fps). (Reference 18).	
(f)	Reactor goes on a positive period; initial power burst is terminated by the Doppler reactivity feedback.	≤1 sec
(g)	APRM Neutron Flux - High signal scrams reactor (conservative; in startup mode, APRM Neutron Flux-High (Setdown) scram would be operative in addition to the IRM).	
(h)	Scram terminates accident	≤5 sec

To limit the worth of the rod which could be dropped in a bank position withdrawal sequences (BPWS) plant, the rod worth minimizer system (RWM) is used below 10% power to enforce the rod withdrawal sequence. The RWM is programmed to follow the BPWS, which are generally defined in References 17 and 127.

14.7.1.2 Model Parameters Sensitivities

Although there are many input parameters to the CRDA analysis, the resultant peak fuel enthalpy was most sensitive to the following input parameters:

(1) Dropped control rod worth,

(2) Doppler reactivity,

(3) Effective delayed neutron fraction,

(4) Fuel rod local peaking factor

01511192

14.7.1.3 Analytical Methods

A parametric evaluation of the control rod drop accident was performed utilizing the COTRAN code. The evaluation determined the effects of Dropped control rod worth (DRW), Doppler coefficient (αD), Effective delayed neutron fraction (βeff), and Fuel rod local peaking factor on the deposited fuel rod enthalpy. Thus, a dropped rods worth can be correlated directly to deposited fuel rod enthalpy by using the results of the parametric evaluation.

The analyses were performed for a variety of total rod worths. These dropped rod worth are obtained by varying the control fraction in the two outer radial zones in the control rod drop model in accordance with the technique described in Reference 227. The Doppler reactivity feedback for the rod drop calculation is conservatively modeled using the change in cross sections as a linear function of the square root of absolute fuel temperature. The parametric Doppler coefficients used for the analysis are -8.5×10^{-6}, -9.5×10^{-6}, -10.5×10^{-6}, and -11.5×10^{-6} $\Delta k/k/^{o}F$.

The effective delayed neutron fraction is varied to cover the range of values from beginning to end of cycle. Six groups of delayed neutron precursors are employed and the values of 0.0045, 0.0055, and 0.0065 for the effective delayed neutron fraction have been used.

The maximum nodal (axial x radial) enthalpy occurs in the dropped rod zone in COTRAN which represents a four bundle model. To convert the maximum nodal enthalpy in a four bundle to the maximum enthalpy in a fuel rod at any axial location, the four bundle local power peaking factor, P4BL, is applied. A typical value of 1.30 has been used as a reference value for the P4BL. This factor is applied external to the COTRAN code as a multiplier on the maximum calculated nodal enthalpy.

P4BL = four-bundle-local-peaking factor

$$= \text{Max} \{ LPFi * 4 * RPFi / \sum RPFj \}$$

Where, LPF = local peaking factor for each fuel assembly

RPF = fuel assembly radial peaking factor

01511192

i, j = spans the four fuel assemblies surrounding the dropped control rod

The dropped rod velocity and the scram reactivity are also considered in the parametric study. The overall negative reactivity insertion as a result of the scram is influenced by several items including the scram signal set point, the delay time from the scram signal to start of scram bank motion and the scram bank velocity. The values used in the analysis are shown below:

Scram Reactivity:	Scram Signal	120% Rated Power
	Scram Delay Time	0.30 second
	Scram Velocity	2.54 ft/sec
Dropped Rod Velocity:	Speed	3.11 ft/sec

Due to the rapidly increasing reactor power, the fuel temperature also rises quickly causing the Doppler feedback to compensate the reactivity produced by the falling rod. The primary power peak occurs when the Doppler feedback exactly balances the dropped rod reactivity insertion. Subsequently the Doppler feedback becomes the dominating factor and the core power is rapidly reduced. The Doppler reactivity has clearly arrested the accident and reduced the power below rated prior to the start of scram motion. Furthermore, the negative reactivity effect of the scram bank is not realized until additional time has elapsed to allow the scram bank to reach a significant level of the core. Therefore, the scram reactivity is of secondary importance (compared to Doppler reactivity) during the rod drop accident.

The results of the reference control rod drop accident analysis have been parameterized to effectively utilize these results generically over the possible range of Doppler reactivity, delayed neutron fraction, and dropped rod worth. Note that within the bounds of this parameterization, the 280 cal/gm limit is not approached.

When licensing calculations are performed for a specific reactor cycle, the cycle/core dependent variables are calculated using the approved core simulator code. Specifically, the maximum rod worth, Doppler coefficient, delayed neutron fraction, and the four bundle local peaking must be determined and used to obtain the maximum fuel rod enthalpy from the reference parameterization. When analyzing control rod drop accident, a dropped rods worth is determined as a rod is dropped individually per Bank Position Withdrawal Sequence (BPWS) procedure. The dropped rod is returned to its original position before the next BPWS rod is dropped. A dropped rods worth is calculated as the difference in core reactivity between the final and initial rod condition. The maximum fuel rod enthalpy is then compared to the limiting criteria to verify that the limits would not be exceeded if a rod drop accident were to occur.

01511192

14.7.1.4 Effect of Fuel Densification

Localized power spikes due to axial gaps in the fuel column would result in a proportional increase in the calculated peak fuel enthalpy. Rod Drop Accident analyses have indicated that the peak enthalpy occurs approximately 18 in. from the top of the core in a fuel bundle adjacent to the dropping control rod. Qualitatively it should also be recognized that this axial spiking effect was very localized and only one or two fuel pellets of a very small number of fuel rods would be affected by a rod drop accident.

AREVA incorporates fuel densification and swelling effects into its RODEX computer codes, as described in References 219, 220, and 221. 01511192

14.7.1.5 Results

The postulated CRDA event is one in which a high worth control blade is stuck in the fully inserted position and is decoupled from its control rod drive. Sometime after, the control rod drive of this blade is withdrawn and the control blade subsequently drops at the maximum speed and creates a localized power excursion.

With the existence of transition mixed cores including both GE14 and AREVA ATRIUM 10XM fuel, the licensing basis for generic acceptance that use of BPWS ensures that 280 cal/g will not be exceeded does not exist. Therefore, per Reference 207, AREVA performs a CRDA analysis every cycle. Analysis results demonstrate the maximum deposited fuel rod enthalpy is less than the NRC license limit of 280 cal/g and is also less than 230 cal/g; the estimated number of fuel rods that exceed the fuel damage threshold of 170 cal/g is less than the number of failed rods assumed in the USAR (850 8x8 equivalent rods - see section 14.7.1.2.) 01511192

14.7.1.6 Radiological Consequences

The Control Rod Drop Accident radiological consequences were analyzed using Alternative Source Term methodology as provided in Regulatory Guide 1.183 (Reference 129). The accident parameters and assumptions used in the analysis (References 13 and 136-140) are summarized below and in USAR Table 14.7-2a, and are in accordance with the guidance provided in RG 1.183.

14.7.1.6.1 Introduction

The postulated CRDA involves the rapid removal (drop) of the highest worth control rod resulting in a reactivity excursion. The CRDA reactivity excursion is terminated by the APRM high flux scram or by the IRMs during startup if the APRMs are not operable. Activity released from damaged fuel is transported to the main condenser and then released to the environment. The release is assumed to terminate after 24 hours.

Two cases were performed to model possible pathways for the main condenser release. The SJAE release case is the limiting case and models the release from the main condenser through the steam jet air ejectors (SJAEs) to the offgas stack with the offgas storage system bypassed. The isolated condenser release case assumes that the mechanical vacuum pump (MVP) is operating at the beginning of the

accident and models the release as leakage from the isolated main condenser following MVP trip on high radiation in the main steam lines.

14.7.1.6.2 Source Term

The core inventory used for the CRDA analysis source term was calculated assuming operation at 2044 MWt (2004 MWt increased by 2% to account for power measurement uncertainties) and operation at the total average burnup expected for a 24-month fuel cycle. See USAR Section 14.7.8 for further discussion of the inventory development.

The core inventory available at accident time T=0 for release is shown in USAR Tables 14.7-24a, 14.7-24b, and 14.7-24c for the three different fuels, in any combination; that may be in the core. 01511192

The source term consists of releases from melted fuel and the gap activity from fuel pins with cladding damage. Fuel cladding damage is assumed to occur in 850 rods, with 9 of those experiencing fuel melt. This represents cladding damage in 2.9% of the core (484 fuel assemblies with 60 rods per equivalent 8x8 assembly). A radial peaking factor of 1.7 is assumed.

For the fuel with cladding damage, 10% of the rod inventory of noble gases and iodines are in the fuel gap and are released into the reactor coolant. For the melted fuel, 100% of the noble gases and 50% of the iodines are released to the reactor coolant. The iodine species released to the reactor coolant are assumed to be 95% aerosol (CsI), 4.85% elemental, and 0.15% organic. Although not specified in RG 1.183, alkali metals (Cs and Rb) are assumed to be released with a release fraction of 0.12 for fuel with cladding damage and 0.25 for melted fuel. The activity is released into the reactor coolant at time zero of the accident and is assumed to mix instantaneously in the reactor coolant within the reactor vessel.

Of the activity released from the reactor coolant within the pressure vessel, 100% of the noble gases, 10% of the iodine, and 1% of the remaining radionuclides are assumed to instantaneously reach the turbine and condensers. Of the activity that reaches the main condenser, 100% of the noble gases, 10% of the iodines, and 1% of the remaining nuclides are available for release to the environment. The iodine species released from the main condenser to the environment are assumed to be 97% elemental and 3% organic.

14.7.1.6.3 Mitigation

The CRDA reactivity excursion is terminated by the APRM high flux scram or by the IRMs during startup if the APRMs are not operable.

For the activity released to the reactor coolant, no credit is assumed for partitioning in the reactor vessel or for removal by the steam separators.

For the SJAE release case, no credit for main condenser isolation is assumed and the release is modeled through operating SJAEs to the offgas stack elevated release point. Condenser air inleakage is assumed to occur at the maximum rate that can be processed by the SJAEs, resulting in minimum holdup time for the release. The offgas storage system is bypassed.

For the isolated condenser release case, the mechanical vacuum pump is operating and isolates on a high radiation signal from the main steam line radiation monitors. An isolation time of 10 seconds is assumed, including MVP suction valve closure time and instrument response time for radiation detection and isolation initiation. Following MVP isolation, the condenser is assumed to leak at 1% per day to the Turbine Building. No credit for dilution or holdup in the Turbine Building is assumed.

CR ventilation is assumed to remain in the normal operating mode throughout the event and no credit for emergency mode filtration or isolation is assumed.

No credit is taken for operator action.

14.7.1.6.4 Transport

The activity released from the reactor coolant is assumed to be instantaneously transported to the main condenser.

For the SJAE release case, the SJAEs are conservatively assumed to be operating at their maximum capacity with 360.5 cfm of condenser air inleakage. The SJAEs discharge to the recombiners and then through the air ejector holdup line to the offgas stack for an elevated release. A 17-minute holdup time is provided for the release, based on condenser air inleakage (SJAE flow from recombiners) and the holdup line volume. The SJAEs continue to operate at their maximum capacity until the release is terminated after 24 hours.

For the isolated condenser release case, the MVP is assumed to be initially operating at its maximum flow rate of 2,300 cfm. The MVP discharges through the steam packing holdup line to the offgas stack for an elevated release. The MVP is isolated within 10 seconds of the accident release by a high radiation signal from the Main Steam Isolation Radiation Monitors. Following MVP isolation, the isolated condenser is assumed to leak at a rate of 1% per day providing a ground level release from the Turbine Building vent until the release is terminated after 24 hours.

CR ventilation remains in the normal mode throughout the accident, with 7,440 cfm of CR air intake assumed, representing the maximum normal CR air intake rate (i.e., no intake blanking plates installed and no recirculation of intake). An additional 1,000 cfm of unfiltered inleakage is assumed. CR dose studies were performed at several lower air intake and unfiltered inleakage flow rates, verifying that the maximum flow rates of 7,440 cfm and 1,000 cfm are limiting.

Control Room and offsite atmospheric dispersion coefficients (X/Q) are shown in USAR Table 14.7-2a.

14.7.1.6.5 Results

Control Room operator and offsite accident doses are shown in USAR Table 14.7-2b.

14.7.2 Loss-of-Coolant Accident

Accidents that could result in release of radioactive material directly into the primary containment are the result of postulated nuclear system pipe breaks inside the drywell. All possibilities for pipe break sizes and locations have been investigated including the severance of small pipe lines, the main steam lines upstream and downstream of the flow restrictors, and the recirculation loop pipelines. Historically, the most severe nuclear system effects and the greatest release of radioactive material to the primary containment result from a complete circumferential break of one of the recirculation loop pipelines. This accident is established as the design basis loss of coolant accident (LOCA). 01511192

The LOCA is analyzed at EPU and MELLLA+ operating conditions in conjunction with the emergency core cooling system (ECCS) performance evaluation (Reference 157 and 192) in accordance with 10CFR50.46 and Appendix K to 10CFR50. (See Section 6.2 for further discussion of ECCS design and performance.) This evaluation is hereinafter referred to as the ECCS-LOCA analysis. A complete spectrum of postulated break sizes and locations is considered in the evaluation of ECCS performance. The objective of the ECCS-LOCA analysis is to demonstrate conformance with the ECCS acceptance criteria of 10CFR50.46 for the most limiting break size, break location and single failure combination for the plant. The required documentation for demonstrating that this objective is met is given in References 157, 160, 161, 182, 192 and 208. As described in Reference 207, a new break spectrum analysis was performed by AREVA for the ATRIUM 10XM fuel. 01511192

The SAFER/GESTR-LOCA application methodology (Reference 24), as accepted by the NRC (Reference 25) is utilized to demonstrate conformance to the first three 10CFR50, Section 50.46 criteria for GNF fuel. This methodology takes advantage of the NRC guidelines in SECY-83-472 (Reference 22) regarding the acceptable level of conservatism for realistic evaluation models. The Evaluation Model used for the break spectrum analysis is the EXEM BWR-2000 LOCA analysis methodology described in Reference 218. 01511192

The description of GE/GNF methods starts in 14.7.2.1 and the description of AREVA methods starts in 14.7.2.2.8 with the fuel densification methods identified in 14.7.2.2.2. 604000000100

14.7.2.1 Description of GE/GNF Design Basis LOCA

Immediately after the postulated double-ended recirculation line break, vessel pressure and core flow begin to decrease. The initial pressure response is governed by the closure of the main steam isolation valves and the relative values of energy added to the system by decay heat and energy removed from the system by the initial blowdown of fluid from the downcomer. The initial core flow decrease is rapid because the recirculation pump in the broken loop ceases to pump almost immediately because it has lost suction. The pump in the intact loop coasts down relatively slowly. This pump coastdown governs the core flow response for the next several seconds. When the jet pump suctions uncover, calculated core flow decreases to near zero. When the recirculation pump suction nozzle uncovers, the energy release rate from the break increases significantly and the pressure begins to decay more rapidly. As a result of the increased rate of vessel pressure loss, the initially subcooled water in the lower plenum saturates and flashes up through the

core, increasing the core flow. This lower plenum flashing continues at a reduced rate for the next several seconds.

Heat transfer rates on the fuel cladding during the early stages of the blowdown are governed primarily by the core flow response. Nucleate boiling continues in the high power plane until shortly after jet pump uncovering.

Boiling transition follows shortly after the core flow loss that results from jet pump uncovering. Film boiling or transition boiling heat transfer rates then apply, with increasing heat transfer resulting from the core flow increase during the lower plenum flashing period. Heat transfer then slowly decreases until the high power axial plane uncovers. At that time, convective heat transfer results from steam cooling.

Water level inside the shroud remains high during the early stages of the blowdown because of flashing of the water in the core. After a short time, the level inside the shroud has decreased to uncover the core. Several seconds later the ECCS is actuated. As a result the vessel water level begins to increase. Some time later, the lower plenum is filled, and the core is subsequently rapidly recovered.

The cladding temperature at the high-power plane decreases initially because nucleate boiling is maintained, the heat input decreases and the sink temperature decreases. A rapid, short duration cladding heatup follows the time of boiling transition when film boiling occurs and the cladding temperature approaches that of the fuel. The subsequent heatup is slower, being governed by decay heat and steam cooling. Indication of flooding to 2/3 core height for a DBA LOCA is expected by about 300 seconds after the initiation of the accident. At this point operator actions can be initiated for the transition to long term core and containment cooling described in Section 14.7.2.3.6 below (References 162 and 164).

14.7.2.2 Analytical Methods

With the application of this methodology, LOCA calculations are performed utilizing two different sets of assumptions. One set of assumptions is consistent with the requirements specified in 10CFR50, Appendix K, and are referred to as “Appendix K” calculations. The other set of assumptions was selected to produce calculated LOCA responses which are more representative of expected BWR performance during a LOCA. ECCS performance calculations using these assumptions are referred to as “nominal” calculations. These calculations represent the expected plant behavior and are, therefore, more useful for evaluating the “real” impact of parameter deviations, proposed plant changes, or training. The significant differences between the Appendix K and the nominal assumptions are listed in Table 14.7-3. The nominal assumptions are utilized to determine the shape of the LOCA break spectrum (Peak Cladding Temperature versus break size) and to determine the limiting single failure. The requirements which must be satisfied to apply this methodology are outlined below.

01511192

The approval of the SAFER/GESTR-LOCA application methodology was based on the generic studies and results presented in the Reference 24 documentation. In the Safety Evaluation Report (SER) for the application methodology (Reference 25), the NRC outlined the conditions which must be satisfied in order to apply the methodology. These conditions primarily apply to the first criteria specified by 10CFR50, Section 50.46 and are outlined below:

1) The generic Appendix K break spectrum (Peak Cladding Temperature versus break size curve) exhibits the same trends as the generic nominal break spectrum.

2) The limiting LOCA determined nominally is the same as that determined from Appendix K calculations for a given class of plants.

3) The generic nominal and Appendix K Peak Cladding Temperature break spectrums must be demonstrated on a plant specific basis to be applicable. This is done by:

   a) Calculating sufficient nominal Peak Cladding Temperature points to verify the shape of the Peak Cladding Temperature versus break size curve.

   b) Confirming that the Appendix K plant specific Peak Cladding Temperature curve matches the trend of the generic Peak Cladding Temperature curve.

   c) Confirming that plant specific operating parameters have been conservatively bounded by the models and inputs used in the generic calculations.

   d) Confirming that the plant specific ECCS configuration is consistent with the referenced plant class ECCS configuration.

The first two conditions were demonstrated generically for BWR-3s in Reference 24. The third condition was demonstrated on a plant specific basis in References 157, 160, 161, 182 and 192.

In addition to demonstrating the applicability of the generic studies, a plant specific licensing basis Peak Cladding Temperature must be determined. The licensing basis Peak Cladding Temperature is based on the most limiting LOCA (highest PCT) and is determined from

$$(PCT)_{Licensing} = (PCT)_{Nominal} + ADDER$$

The adder is calculated as follows:

$$(ADDER)^2 = [\,(PCT)_{Appendix\ K} - (PCT)_{Nominal}\,]^2 + \Sigma(\delta PCT_i)^2$$

where:

$(PCT)_{Appendix\ K}$ = peak cladding temperature from Appendix K specified model case,

$(PCT)_{Nominal}$ = peak cladding temperature from nominal case,

$\Sigma(\delta PCT_i)^2$ = plant variable uncertainty term.

01511192

Based on these equations and the results obtained from the nominal and Appendix K calculations, the licensing basis Peak Cladding Temperature (PCT) for GE14 fuel is 2170°F, which is reported in the ECCS-LOCA analysis (Reference 135). This provides approximately 30°F margin to 10CFR50, Section 50.46, criterion (b)(1), peak cladding temperature limit of 2200°F for the GE14 fuel.

In addition to the licensing basis calculation, the NRC requires calculation of a statistical upper bound Peak Cladding Temperature. This is a function of the limiting nominal Peak Cladding Temperature and uncertainties in the model and plant variables. The licensing basis Peak Cladding Temperature is required to be higher than the upper bound Peak Cladding Temperature. This ensures that the Licensing Peak Cladding Temperature bounds the expected Peak Cladding Temperature for 95% of all postulated LOCAs. As a part of the SAFER/GESTR- LOCA licensing methodology, GE demonstrated that this criterion was satisfied for BWR-3s.

The Upper Bound PCT calculations are based on the same nominal large break PCT as the Licensing Basis PCT calculation (recirculation suction line design basis accident (DBA) and maximum extended load limit line analysis (MELLLA) core flow condition, 106% original licensed thermal power (OLTP) and 82% Core Flow, with midpeaked axial power shape assumption and Battery single failure combination). The reported Upper Bound PCT is rounded up to the nearest 10°F. With the explicit verification that the new Licensing Basis PCT is greater than the Upper Bound (95th percentile) PCT, the level of safety and conservatism of this analysis meets the NRC approved criteria. Therefore the requirements of Appendix K are satisfied. The Upper Bound PCT is < 1670°F. The plant specific MNGP demonstration of this criterion for the Upper Bound PCT is provided in References 134, 156, 157, 160, 161, 165, 182 and 192.

01511192

Conformance to the 10CFR50, Section 50.46, criterion (b)(2), maximum cladding limit is demonstrated in the ECCS-LOCA analysis (Reference 157 and 192). Section 3.3.4 of Reference 157 contains the maximum local oxidation percentage evaluated. This value is well below the 17% criterion specified in the regulations (the highest Monticello value is less than 10% for GE14 fuel).

Section 3.3.4 of Reference 157 and 192 shows that the maximum calculated core-wide metal reaction is < 0.2%. This is well below the 1% value specified by 10CFR50, criterion (b)(3).

While Appendix K evaluations are necessary to demonstrate that licensing criteria are met, the realistic or nominal evaluations lead to significantly different conclusions relative to these criteria. Namely, with realistically low PCTs (below 1670°F), there will be negligible metal-water reaction, no fuel cladding perforations and negligible oxidation or hydrogen generation. Thus, if plant modifications are planned, the impact or change in the margin to these criteria should be assessed both on a realistic basis and a licensing basis to judge the safety consequences of the proposed change.

An Appendix K evaluation for the MELLLA+ extended operating domain was performed. The MELLLA+ Appendix K evaluation demonstrated that all of the 10CFR50.46 criteria were met. For the small break LOCA, the subcooling in the downcomer increases as the flow is decreased, which tends to increase the break flow. The increased break flow helps to depressurize the reactor and permits ECCS to inject earlier, which tends to decrease the PCT. In addition, the fuel remains in nucleate boiling, and boiling transition is not an issue as in the case for large breaks.

The small break PCT is significantly less than the limiting Appendix K PCT and was not calculated for MELLLA+ operation in accordance with Limitation 12.13 of the NRC SER for the MELLLA+ Licensing Topical Report. See Section 4.3.3 of Reference 182.

For the large break DBA LOCA, the limiting MELLLA+ statepoints were evaluated including operation at rated and less than rated power with accounting for top and mid-peaked axial power shapes. At the reduced core flow, the boiling transition occurs earlier and lower in the bundle. The increased subcooling increases the initial break flow. For a DBA LOCA at rated power, the LHGR setdown limit is increased from 10% to 14.1% such that the MELLLA+ PCT is bounded by the limiting MELLLA PCT. For a large Break DBA LOCA at less than rated power, the application of the flow dependent MAPLHGR multipliers result in PCT less than the Licensing Basis PCT values. The evaluation shows that the MELLLA+ PCT is below the Licensing Basis PCT of 2170°F, and the Licensing Basis PCT continues to bound the Upper Bound PCT. The large break Appendix K evaluation and the associated PCT results are documented in Section 4.3.2 of Reference 182. The PCT results and the Appendix K evaluation was subsequently approved by the NRC by SER (Reference 184). The cycle reload evaluations confirm that the cycle specific off-rated thermal limits are consistent with the assumptions in the MELLLA+ ECCS-LOCA analyses.

01511192

14.7.2.2.1 GE/GNF LOCA Analysis Computer Codes

The computer codes used to establish the LOCA response with the SAFER/GESTR methodology include LAMB, TASC, ISCOR, SAFER, and GESTR-LOCA (References 134, 157, 160, 182 and 192). Together these codes evaluate the short-term and long-term vessel blowdown response to a pipe rupture, the subsequent reflooding by the ECCS and the fuel cladding heat up. The purpose of each is described in the subsections below.

The LAMB code is used to analyze the short-term blowdown phenomena for large postulated pipe breaks in jet pump BWRs. The LAMB output (most importantly core flow as a function of time) is input to the TASC code for the calculation of the blowdown heat transfer and fuel dryout time.

ISCOR calculates the initial steady state reactor heat balance and the initial core flow and pressure drop distribution.

The TASC code completes the transient short-term thermal-hydraulic calculation for large recirculation line breaks in jet pump BWRs. A boiling transition correlation is used to predict the time and location of boiling transition for a large break LOCA. The calculated fuel dryout time is input into the long-term thermal-hydraulic transient model, SAFER. See Reference 150 for details of the TASC code.

The SAFER code is used to calculate the long-term system response for reactor transients over a complete spectrum of hypothetical break sizes and locations. SAFER determines, as a function of time, the core water level, system pressure response, ECCS performance, and other primary thermal-hydraulic phenomena occurring in the reactor. SAFER realistically models all regimes of heat transfer which occur inside the core during the event, and provides the outputs for heat transfer coefficients and Peak Cladding Temperature as a function of time. SAFER divides the reactor vessel into its major regions: the lower plenum, guide tubes, core

bypass, core and fuel channels, upper plenum, downcomer, and steam dome. Figure 14.7-7 depicts these regions. (SAFER replaces the SAFE, REFLOOD, and CHASTE codes which were previously utilized in establishing the Monticello LOCA licensing basis.) A detailed description of the SAFER model is contained in Reference 26.

The GESTR code is used to initialize the fuel stored energy and fuel rod fission gas inventory at the onset of a postulated LOCA. GESTR also initializes the transient pellet-cladding gap conductance for input into both SAFER and TASC.

The use of these codes for ECCS-LOCA analysis was included in Table 1-1 of Reference 160 and 182. This application has been approved by NRC SER (Reference 134). See Reference 157 and 192 for all codes used in the ECCS-LOCA analysis. This reference also provides sub-references that detail the development and NRC approval of these codes.

14.7.2.2.2 Effect of Fuel Densification

Power spiking due to in-reactor fuel densification has not been explicitly considered in LOCA calculations. General Electric Company's analytical procedure to account for the effects of fuel densification power spiking has been approved by the NRC in a May 1978 SER, Safety Evaluation of the GE Method for the consideration of Power Spiking due to Densification Effects in BWR 8x8 Fuel Design and Performance (Reference 43).

AREVA incorporates fuel densification and swelling effects into its RODEX computer codes, as described in References 219, 220, and 221. 01511192

14.7.2.2.3 ECCS-LOCA Analysis Assumptions

ECCS-LOCA licensing analyses are required to incorporate several limiting assumptions. This is to ensure that the ECCS design is capable of mitigating all postulated LOCA event scenarios. The required assumptions are:

(a) A break occurs in any steam or liquid line which forms part of the primary reactor coolant pressure boundary. (10CFR50, Appendix K)

(b) Coincident with the LOCA, offsite power may become unavailable. Consequently, the limiting condition, either availability or unavailability of offsite power, must be evaluated. (10CFR50, Appendix A, General Design Criteria 35)

(c) A single component within the ECCS network fails coincident with the LOCA. (10CFR50, Appendix K)

(d) The Reactor Core Isolation Cooling (RCIC) system is unavailable.

01511192

14.7.2.2.4 GE/GNF Break Location and Size

10CFR50, Appendix K requires that all potential break locations be considered when evaluating the response to a LOCA. For BWR ECCS-LOCA analyses, it has been demonstrated that the most limiting breaks are liquid line breaks (breaks below the elevation of the top of the core). The limiting break was determined in the generic evaluations to be a break of the recirculation line. The recirculation line is the largest line connected to the vessel at a low elevation relative to the core.

01511192

Recirculation line breaks for BWR-3s are normally analyzed at the recirculation suction line (suction break). The maximum effective break area is then determined based on the dimensions of the pipe diameters and fittings where critical or choked flow will occur. The SAFER code assumes the recirculation break is made up of two parts but assumes that critical flow occurs immediately at the minimum flow area in the path, i.e., the inertial effects in the broken loop piping are ignored. For Monticello the maximum effective suction line break area is 4.111 ft^2. This consists of an area contribution of 3.616 ft^2 from the vessel nozzle (on the suction side of the pump), an effective area contribution of 0.399 ft^2 from the recirculation piping which normally feeds the jet pump drive lines, 0.016 ft^2 to account for the bottom head drain line (Reference 157 and 192) and a contribution of 0.080 ft^2 to simulate an open RHR intertie line. The second value is actually determined based on the choked flow area of the ten jet pump nozzles (Reference 38).

In the SAFER model, the recirculation loop is left open with no hydraulic impediment from the recirculation components so that either LPCI flow or vessel inventory loss from the bottom head drain or downcomer have a path to the break. This is conservative as it is the loss of inventory from the vessel that is a dominant factor. The suction leg is more limiting than the discharge leg because of the larger break area and greater break flow. The large break analysis does not credit LPCI flow to the broken loop (Reference 156).

The Monticello ECCS-LOCA analysis performed for operation at 2004 MWt (Reference 157 and 192) considered breaks ranging from the maximum suction line break down to a 0.05 ft^2 recirculation suction line break (Reference 158). In addition, the analysis also evaluated the ECCS performance response for four non-recirculation line breaks. These represented the maximum break area for the feedwater line, core spray line, and main steam line (two steam line breaks were evaluated, one assumed to occur inside the containment and one assumed to occur outside the containment). A summary of the maximum break sizes evaluated in the analysis is provided in Table 14.7-4. The analysis confirmed that the limiting large break is the maximum recirculation suction line break. The MELLLA+ operating domain extension does not affect the break spectrum or identification of the limiting break (Reference 182).

01511192

The small break response at EPU power level of 2004 MWt, while taking credit for three ADS valves, was also evaluated as a part of the ECCS-LOCA analysis to determine the limiting break size (References 156 and 157). The large break is the limiting break. Tables SNPB-5-1 and 2 of Reference 161 lists the break sizes and power shapes for the ECCS analysis. The difference between the limiting EPU large break and the limiting EPU small break exceeds the threshold of the Limitation and Condition of the MELLLA+ licensing topical report for consideration of small breaks (Reference 185). Consequently, the evaluation of small breaks for MELLLA+ are not

required nor included in the ECC-LOCA analysis performed for MELLLA+ (Reference 192).

14.7.2.2.5 Effects of Unavailability of Offsite Power

The primary effect of the assumption that offsite power becomes unavailable coincident with the LOCA is an increase in the time delay for injection by the low pressure ECC systems. This occurs because the ECC systems must then wait for the emergency power supplied by the diesel generators. This unavailability of offsite power assumption is also implemented in other aspects of the ECCS-LOCA analysis as discussed below.

The unavailability of offsite power causes a trip of the reactor recirculation pumps at the beginning of the event. This causes both pumps to begin coasting down. A time constant of 5 secs (the minimum value derived from the rotational inertia time constant of the recirculation pump and motor-generator unit) is assumed for the coastdown. For the broken recirculation loop, the pump coastdown time constant is immaterial because the flow coastdown is dominated by the break flow dynamics (i.e., the break causes a rapid flow reversal in the broken loop which effectively results in an extremely rapid coastdown of the flow).

The feedwater pumps are also assumed to trip at the beginning of the event. The feedwater pumps are conservatively assumed to linearly coastdown from the initial value to zero in 5 secs.

Since the Reactor Protection System (RPS) is fail safe, the unavailability of offsite power will initiate a scram at the beginning of the event. General Electric has performed internal studies that indicate that the difference between a scram initiated at the beginning of the event and a scram initiated on low water level (Level 3) is negligible.

14.7.2.2.6 Initial Reactor Operating Conditions

For the nominal calculations, 2004 MWt is used in the GE/GNF ECCS-LOCA analysis (References 157, 158, and 192). For the Appendix K cases, 2044 MWt (102% of 2004 MWt) is used in the References 157, 158, 192 and 208 evaluation. A summary of the Monticello initial condition is provided in Table 14.7-5. 01511192

The reactor operating dome pressure selected for the GE/GNF nominal conditions was 1025 psia, and a value of 1040 psia was utilized in the Appendix K calculations. Since the limiting break (highest PCT) causes a rapid depressurization of the reactor vessel, the ECCS performance response is relatively insensitive to the initial dome pressure. 01511192

01511192

14.7.2.2.7 GE/GNF LOCA Fuel Parameters

The GE/GNF ECCS-LOCA analysis utilizes the GE14 product line (Reference 157 and 192). Individual fuel bundle designs within this product line conform to the ECCS-LOCA analysis input assumptions. Use of fuel bundle designs in reload quantities that have significantly altered physical fuel rod configurations, requires updating of the ECCS-LOCA analysis.

Both the Peak Linear Heat Generation Rate (PLHGR) and Maximum Average Planar Linear Heat Generation Rates (MAPLHGR) for the fuel are inputs to the ECCS-LOCA analysis. The PLHGR values determine the power for the peak power rod at the peak axial node while the MAPLHGR values determine the average rod power for the same axial node. The PLHGR values and MAPLHGR value used in the ECCS-LOCA analysis are given in Table 14.7-6 along with other pertinent fuel parameters.

The PLHGR value used in the Appendix K calculation is the maximum licensed PLHGR, as required by the regulations. The difference between the PLHGR and MAPLHGR represents the effect of the local rod-to-rod peaking (i.e., the difference between the peak power location on any rod in a bundle and the bundle planar average power corresponding to the axial location of the peak power including the effects of gamma smearing). The use of a relatively low local rod-to-rod peaking results in a flatter bundle axial power distribution. Since the highest power rod is assumed to be operating on its maximum allowable limits, this causes the surrounding fuel rods to be at their highest power which results in higher calculated peak cladding temperatures.

01511192

The MAPLHGR values identified in Table 14.7-6 are those which are justified by the GE/GNF ECCS-LOCA analysis results. MAPLHGR values are not a direct input to the ECCS-LOCA analysis, but are easily derived as discussed above based on the PLHGR and the maximum rod-to-rod (local) power peaking factor. The actual MAPLHGR used in the Appendix K calculation is 102% of the value given in Table 14.7-6 to account for the 10CFR50 Appendix K required 2% power uncertainty.

Another fuel parameter used in the ECCS-LOCA analysis is the initial operating Minimum Critical Power Ratio (MCPR). The value selected for the analysis corresponds to an initial operating MCPR of 1.35 for GE14 fuel. The Appendix K analysis value is conservatively reduced by a factor of 1.02 to account for the 2% power uncertainty imposed by the Appendix K regulations.

14.7.2.2.8 Loss-of-Coolant Accident – ATRIUM 10XM Fuel/AREVA Methods

01511192

Discussion in the preceding sub-sections of Section 14.7.2 primarily described ECCS-LOCA analyses using the GE/GNF SAFER-GESTR methodology. As discussed at the beginning of USAR Section 14.7, for mixed/transition core loadings with both GE14 and AREVA ATRIUM 10XM fuel loaded, the ECCS-LOCA analysis methodology applied is dependent on the fuel supplier of the fuel of interest. The following sub-sections describe the AREVA ECCS-LOCA methodology.

AREVA Loss-of-Coolant Accident (LOCA) analysis, models, evaluation, and results are for a full core of ATRIUM 10XM fuel. The basis for applicability of PCT results from full cores of ATRIUM 10XM fuel (based on AREVA methods) and fuel cores of GE14 fuel (based on GNF methods) for a mixed (transition) core is provided in Reference 202, Appendix C. Thermal-hydraulic characteristics of the GE14 and ATRIUM 10XM fuel designs are similar as presented in Reference 198. Therefore, the core response during a LOCA will not be significantly different for a full core of GE14 fuel or a mixed core of GE14 and ATRIUM 10XM fuel. In addition, since about 95% of the reactor system volume is outside the core region, slight changes in core volume and fluid energy due to fuel design differences will produce an insignificant change in total system volume and energy. Therefore, the existing GE14 LOCA analysis and resulting licensing PCT and MAPLHGR limits remain applicable for GE14 fuel in transition cores and current AREVA analysis and resulting licensing PCT and MAPLHGR limits are applicable for ATRIUM 10XM fuel in transition cores and beyond.

Plant specific AREVA ECCS analyses provide peak cladding temperature (PCT) and maximum local metal-water reaction (MWR) values and establish MAPLHGR limits for each fuel design. For the limiting single failure and limiting break, calculations are performed to determine the PCT and MWR values over the expected exposure lifetime of the fuel when operating at the MAPLHGR limit. The limiting break is determined by evaluating a spectrum of potential break locations, sizes, and single failures.

The limiting single failure of ECCS equipment is that failure which results in the minimum margin to the PCT criterion. From a list of potentially limiting ECCS single failures, AREVA analyzes potentially limiting failures and identifies the worst single failure for the AREVA fuel design.

Evaluations and analyses to establish the location of the limiting break are performed. Analyses are performed for breaks on the suction and discharge sides of the recirculation pump. Non-recirculation line breaks are also evaluated but are generally non-limiting. The determination of the limiting location is based on minimum margin to the PCT criterion calculated for consistent fuel exposure conditions at each of the break locations. The MWR criterion is typically not challenged if the PCT limit is met, and is normally reported for the highest PCT case. Analyses to establish the size of the limiting break are performed. Hypothetical split and guillotine piping system breaks are evaluated up to and including those with a break area equal to the cross-sectional area of the largest pipe in the recirculation system piping. As with the location spectrum, the determination of the limiting break size is based on the minimum margin to the PCT criterion.

The condition of the fuel during the LOCA analysis is conservatively based on exposure conditions which assure that the highest value of fuel stored energy is used. The condition of the fuel is based on fuel conditions associated with planar average exposure. The AREVA Appendix K LOCA methodology is referred to as the EXEM BWR-2000 Evaluation Model (Reference 218).

01511192

14.7.2.2.9 Description of Design Basis LOCA – AREVA Methods

The LOCA is described in the Code of Federal Regulations 10 CFR 50.46 as a hypothetical accident that results in a loss of reactor coolant from breaks in reactor coolant pressure boundary piping up to and including a break equivalent in size to a double-ended rupture of the largest pipe in the reactor coolant system. There is not a specifically identified cause that results in the pipe break. However, for the purpose of identifying a design basis accident, the pipe break is postulated to occur inside the primary containment before the first isolation valve.

For a boiling water reactor (BWR), a LOCA may occur over a wide spectrum of break locations and sizes. Responses to the break vary significantly over the break spectrum. The largest possible break is a double-ended rupture of a recirculation pipe; however, this is not necessarily the most severe challenge to the emergency core cooling system (ECCS). A double-ended rupture of a main steam line causes the most rapid primary system depressurization, but because of other phenomena, steam line breaks are seldom limiting with respect to the event acceptance criteria (10 CFR 50.46). In addition to break location dependence, different break sizes in the same pipe produce quite different event responses, and the largest break area is not necessarily the most severe challenge to the event acceptance criteria. Because of these complexities, an analysis covering the full range of break sizes and locations is performed to identify the limiting break characteristics. This analysis is typically known as a “break spectrum analysis”.

01511192

Regardless of the initiating break characteristics, the event response is conveniently separated into three phases: the blowdown phase, the refill phase, and the reflood phase. The relative duration of each phase is strongly dependent upon the break size and location. The last two phases are often combined and discussed together.

During the blowdown phase of a LOCA, there is a net loss of coolant inventory, an increase in fuel cladding temperature due to core flow degradation, and for the larger breaks, the core becomes fully or partially uncovered. There is a rapid decrease in pressure during the blowdown phase. During the early phase of the depressurization, the exiting coolant provides core cooling. Later in the blowdown, core cooling is provided by lower plenum flashing as the system continues to depressurize and the injection of ECCS flows. The blowdown phase is defined to end when the system reaches the pressure corresponding to the rated Low Pressure Core Spray (LPCS) flow.

In the refill phase of a LOCA, the ECCS is functioning and there is a net increase of coolant inventory. During this phase the core sprays provide core cooling and, along with low-pressure and high-pressure coolant injection (LPCI and HPCI), supply liquid to refill the lower portion of the reactor vessel. In general, the core heat transfer to the coolant is less than the fuel decay heat rate and the fuel cladding temperature continues to increase during the refill phase.

In the reflood phase, the coolant inventory has increased to the point where the mixture level reenters the core region. During the core reflood phase, cooling is provided above the mixture level by entrained reflood liquid and below the mixture level by pool boiling. Sufficient coolant eventually reaches the core hot node and the fuel cladding temperature decreases.

14.7.2.2.10 AREVA Analytical Methods

The Evaluation Model used for the break spectrum analysis is the EXEM BWR-2000 LOCA analysis methodology described in Reference 218. The EXEM BWR-2000 methodology employs three major computer codes to evaluate the system and fuel response during all phases of a LOCA. These are the RELAX, HUXY, and RODEX2 computer codes. RELAX is used to calculate the system and hot channel response during the blowdown, refill and reflood phases of the LOCA. The HUXY code is used to perform heatup calculations for the entire LOCA, and calculates the PCT and local clad oxidation at the axial plane of interest. RODEX2 is used to determine fuel parameters (such as stored energy) for input to the other LOCA codes. The code interfaces for the LOCA methodology are illustrated in Figure 14.7-14 of Reference 218.

A complete analysis for a given break size starts with the specification of fuel parameters using RODEX2 (Reference 219). RODEX2 is used to determine the initial stored energy for both the blowdown analysis (RELAX hot channel) and the heatup analysis (HUXY). This is accomplished by ensuring that the initial stored energy in RELAX and HUXY is the same or higher than that calculated by RODEX2 for the power, exposure, and fuel design being considered.

14.7.2.2.10.1 Blowdown Analysis

The RELAX code (Reference 218) is used to calculate the system thermal-hydraulic response during the blowdown phase of the LOCA. For the system blowdown analysis, the core is represented by an average core channel. The reactor core is modeled with heat generation rates determined from reactor kinetics equations with reactivity feedback and with decay heating as required by Appendix K of 10 CFR 50. The reactor vessel nodalization for the system analysis is similar to that shown for SAFER. The nodalization in the AREVA analysis is consistent with that used in the topical report submitted to the NRC (Reference 218).

The RELAX blowdown analysis is performed from the time of the break initiation through the end of blowdown (EOB). The system blowdown calculation provides the upper and lower plenum transient boundary conditions for the hot channel analysis.

Following the system blowdown calculation, another RELAX analysis is performed to analyze the maximum power assembly (hot channel) of the core. The RELAX hot channel blowdown calculation determines hot channel fuel, cladding, and coolant temperatures during the blowdown phase of the LOCA.

The hot channel analysis is performed using the system blowdown results to supply the core power and the system boundary conditions at the core inlet and exit. The initial average fuel rod temperature at the limiting plane of the hot channel is conservative relative to the average fuel rod temperature calculated by RODEX2 for operation of the ATRIUM 10XM assembly at the MAPLHGR limit. The heat transfer coefficients and fluid conditions at the limiting plane of the RELAX hot channel calculation are used as input to the HUXY heatup analysis.

01511192

14.7.2.2.10.2 Refill/Reflood Analysis

The RELAX code is also used to compute the system and hot channel hydraulic response during the refill/reflood phase of the LOCA. The RELAX system and RELAX hot channel analyses continue beyond the end of blowdown to analyze system and hot channel responses during the refill and reflood phases. The refill phase is the period when the lower plenum is filling due to ECCS injection. The reflood phase is the period when some portions of the core and hot assembly are being cooled with ECCS water entering from the lower plenum. The purpose of the RELAX calculations beyond blowdown is to determine the time when the liquid flow via upward entrainment from the bottom of the core becomes high enough at the hot node in the hot assembly to end the temperature increase of the fuel rod cladding. This event time is called the time of hot node reflood. The time when the core bypass mixture level rises to the elevation of the hot node in the hot assembly is also determined.

RELAX provides a prediction of fluid inventory during the ECCS injection period. Allowing for countercurrent flow through the core and bypass, RELAX determines the refill rate of the lower plenum due to ECCS water and the subsequent reflood times for the core, hot assembly, and the core bypass. The RELAX calculations provide HUXY with the time of hot node reflood and the time when the liquid has risen in the bypass to the height of the axial plane of interest (time of bypass reflood).

14.7.2.2.10.3 Heatup Analysis

The HUXY code (Reference 222) is used to perform heatup calculations for the entire LOCA transient and provides PCT and local clad oxidation at the axial plane of interest. The heat generated by metal-water reaction (MWR) is included in the HUXY analysis. HUXY is used to calculate the thermal response of each fuel rod in one axial plane of the hot channel assembly. These calculations consider thermal-mechanical interactions within the fuel rod. The clad swelling and rupture models from NUREG-0630 have been incorporated into HUXY (Reference 224). The HUXY code complies with the 10 CFR 50 Appendix K criteria for LOCA Evaluation Models. 01511192

HUXY uses the EOB time and the times of core bypass reflood and core reflood at the axial plane of interest from the RELAX analysis. Until the EOB, HUXY uses RELAX hot channel heat transfer coefficients, fluid temperatures, fluid qualities, and power. Throughout the calculations, decay power is determined based on the ANS 1971 decay heat curve plus 20% as described in Reference 218. After the EOB and prior to the time of hot node reflood, HUXY uses Appendix K spray heat transfer coefficients for the fuel rods, water channel and fuel channel. Experimental data for AREVA 10X10 fuel which supports the use of the convective heat transfer coefficients listed in Appendix K is documented in Reference 224. After the time of hot node reflood, Appendix K reflood heat transfer coefficients are used in the HUXY analysis. The principal results of a HUXY heatup analysis are the PCT and the percent local oxidation of the fuel cladding, often called the %MWR. 01511192

14.7.2.2.10.4 Break Spectrum Analysis

The results of a loss-of-coolant accident (LOCA) break spectrum analysis at extended power uprate (EPU) conditions for Monticello have been determined using the AREVA methodology. The purpose of the break spectrum analysis is to identify the parameters that result in the highest calculated peak cladding temperature (PCT) during a postulated LOCA. The LOCA parameters determined include the following:

a) Break location

b) Break type (double-ended guillotine (DEG) or split)

c) Break size

d) Limiting emergency core cooling system (ECCS) single failure

e) Axial power shape (top- or mid-peaked)

The analyses are performed with LOCA Evaluation Models developed by AREVA and approved for reactor licensing analyses by the U.S. Nuclear Regulatory Commission (NRC). The models and computer codes used by AREVA for LOCA analyses are collectively referred to as the EXEM BWR-2000. The EXEM BWR-2000 Evaluation Model and NRC approval are documented in Reference 218. The calculations are performed in conformance with 10 CFR 50 Appendix K requirements and satisfy the event acceptance criteria identified in 10 CFR 50.46. 01511192

The break spectrum analyses were performed for a core composed entirely of ATRIUM™ 10XM fuel at beginning-of-life (BOL) conditions. Calculations assumed an initial core power of 102% of 2004 MWt, providing a licensing basis power of 2044.08 MWt. The 2.0% increase reflects the maximum uncertainty in monitoring reactor power, as per NRC requirements. The limiting assembly in the core was assumed to be at a maximum average planar linear heat generation rate (MAPLHGR) limit of 13.1 kW/ft. Other initial conditions used in the analyses included core flow, recirculation loop flow, steam flow, steam dome pressure, core inlet enthalpy, and maximum hot assembly MCPR, as well as ATRIUM 10XM fuel assembly parameters (Reference 208). When the exposure dependent MAPLHGR limit was established, the highest MAPLHGR was reduced to 12.5 kW/ft (Reference 226).

The results of the ATRIUM 10XM LOCA break spectrum analysis performed in support of the fuel transition at Monticello are presented in Reference 208. Break spectrum calculations were performed at several core flow and core power statepoints to ensure that limiting results were determined. Analyzed power levels were 2% higher than actual statepoint values to ensure that 10 CFR 50 Appendix K requirements were satisfied.

The objective of break spectrum analyses is to ensure that the limiting break location, break type, break size, and ECCS single failure are identified. The LOCA response scenario varies considerably over the spectrum of break locations. Potential break locations are separated into two groups: recirculation line breaks and non-recirculation line breaks. The basis for the break locations and potentially limiting single failures is described in the following sections.

14.7.2.2.10.4.1 Limiting Single Failure

Regulatory requirements specify that the LOCA analysis be performed assuming that all offsite power supplies are lost instantaneously and that only safety grade systems and components are available. In addition, regulatory requirements also specify that the most limiting single failure of ECCS equipment must be assumed in the LOCA analysis. The term "most limiting" refers to the ECCS equipment failure that produces the greatest challenge to event acceptance criteria. The limiting single failure can be a common power supply, an injection valve, a system pump, or system initiation logic. The most limiting single failure may vary with break size and location. The potential limiting single failures are shown below:

a) DC power (SF-BATT)

b) Diesel generator (SF-DGEN)

c) LPCI injection valve (SF-LPCI)

d) High-pressure coolant injection system (SF-HPCI)

e) ADS valve (SF-ADS)

All three ADS valves are assumed operable in the analyses that do not consider SF-ADS. The single failures and the available ECCS for each failure assumed in these AREVA analyses are consistent with Table 14.7-11. Other potential failures are not specifically considered because they result in as much or more ECCS capacity.

A comparison of the systems remaining for each of the assumed failures shows that the diesel generator failure (SF-DGEN) always has more available ECCS capacity than the battery failure (SF-BATT). Therefore, PCT results obtained for SF-BATT bound those obtained for SF-DGEN. Similarly, a comparison of the systems remaining for HPCI failure (SF-HPCI) shows that it also always provides more available ECCS capacity than the SF-BATT. Therefore, PCT results obtained for SF-BATT bound those obtained for SF-HPCI. As a result, results reported in Reference 208 are those considering SF-BATT, SF-LPCI, and SF-ADS.

01511192

14.7.2.2.10.4.2 Recirculation Line Breaks

The response during a recirculation line LOCA is dependent on break size. The rate of reactor vessel depressurization decreases as the break size decreases. The high pressure ECCS and ADS will assist in reducing the reactor vessel pressure to the pressure where the LPCI and LPCS flows start. For large breaks, rated LPCS and LPCI flow is generally reached before or shortly after the time when the ADS valves open so the ADS system is not required to mitigate the LOCA. ADS operation is an important emergency system for small breaks where it assists in depressurizing the reactor system faster, and thereby reduces the time required to reach rated LPCS and LPCI flow.

The two largest flow resistances in the recirculation piping are the recirculation pump and the jet pump nozzle. For breaks in the discharge piping (PD), there is a major flow resistance in both flow paths from the reactor vessel to the break. For breaks in the suction piping (PS), the major flow resistances are in the same flow path from the vessel to the break. As a result, pump suction side breaks experience a more rapid blowdown, which tends to make the event more severe. For suction side breaks, the recirculation discharge isolation valve on the broken loop closes which allows the LPCI flow to fill the discharge piping and supply flow to the lower plenum and core. For discharge side breaks with break areas ≥ 0.4 ft^2, the LPCI Selection Logic directs all available LPCI flow to the intact loop. No LPCI flow is credited for breaks < 0.4 ft^2. Both suction and discharge recirculation pipe breaks are considered in the break spectrum analysis.

Two break types (geometries) are considered for the recirculation line break. The two types are the double-ended guillotine (DEG) break and the split break. 01511192

For a DEG break, the piping is assumed to be completely severed resulting in two independent flow paths to the containment. The DEG break is modeled by setting the break area (at both ends of the pipe) equal to the full pipe cross-sectional area and varying the discharge coefficient between 1.0 and 0.4. The range of discharge coefficients is used to cover uncertainty in the actual geometry at the break. Discharge coefficients below 0.4 are unrealistic and not considered in the EXEM BWR-2000 methodology. The most limiting DEG break is determined by varying the discharge coefficient. The labeling convention for guillotine breaks is to list the discharge coefficient before DEG. For example, a guillotine break with a discharge coefficient of 0.8 on the suction side of the recirculation pump would be labeled as 0.8DEGPS.

A split type break is assumed to be a longitudinal opening or hole in the piping that results in a single break flow path to the containment. Appendix K of 10 CFR 50 defines the cross-sectional area of the piping as the maximum split break area required for analysis. The labeling convention for split breaks is to list the flow area using the letter “P” instead of a period. For example, a split break with a flow area of 3.5 ft^2 on the suction side of the recirculation pump would be labeled as 3P5FT2PS. These labeling conventions for double-ended guillotine and split breaks are typically used in figures such as those in Section 7.0 of Reference 208. Break types, break sizes and single failures are analyzed for both suction and discharge recirculation line breaks.

Reference 208 provides a description and results summary for breaks in the recirculation line.

14.7.2.2.10.4.3 Non-Recirculation Line Breaks

In addition to breaks in the recirculation line, breaks in other reactor coolant system piping must be considered in the LOCA break spectrum analysis. Although the recirculation line large breaks result in the largest coolant inventory loss, they do not necessarily result in the most severe challenge to event acceptance criteria. The double-ended rupture of a main steam line is expected to result in the fastest depressurization of the reactor vessel. Special consideration is required when the postulated break occurs in ECCS piping. Although ECCS piping breaks are small relative to a recirculation pipe DEG break, the potential to disable an ECCS system increases their severity.

Non-recirculation line breaks outside of the containment are inherently less challenging to fuel limits than breaks inside the containment. For breaks outside containment, isolation or check valve closure will terminate break flow prior to the loss of significant liquid inventory and the core will remain covered. If high-pressure coolant inventory makeup cannot be reestablished, ADS actuation may become necessary. Although analyses of breaks outside containment may be required to address non-fuel related regulatory requirements, these breaks are not limiting relative to fuel acceptance criteria such as PCT. For the Monticello break spectrum analysis, breaks in the main steam lines, feedwater lines, HPCI lines, LPCS lines, LPCI lines, RWCU lines, shutdown cooling lines, and instrument lines were all considered and found to be non-limiting. 01511192

14.7.2.2.10.4.4 Long Term Cooling

AREVA continues to credit the GEH evaluation of long term core cooling capability as described in 14.7.2.3.6.

14.7.2.2.11 Summary of AREVA ECCS-LOCA Results

The most limiting Peak Cladding Temperature (PCT) for AREVA ATRIUM 10XM fuel during Two Loop Operation (TLO) is 2122 degrees F in the break spectrum resulting in a final temperature of 2034 degrees F in the MAPLHGR analysis and occurs for a double ended guillotine break in the recirculation suction line with a mid-peaked axial power shape and a failure of LPCI injection (SF-LPCI). For Single Loop Operation (SLO), the most limiting PCT is 1864 degrees F and occurs for a 0.8 discharge coefficient double ended guillotine break at the same location and for the same power shape and ECCS failure. These are Appendix K results and are licensing PCT values. A MAPLHGR multiplier of 0.70 is established for SLO since LOCA is more severe when initiated during SLO. ECCS system flow rates, initiation times, and pressure ranges for the AREVA analysis are consistent with values shown in Tables 14.7-7 through 14.7-12 and Figures 14.7-8 through 14.7-12, as documented in Reference 208. Note that cycle-specific MAPLHGR limit determinations for various fuel designs can result in lowering the MAPLHGR limit below the 13.1 kw/ft bounding value used in the AREVA ECCS-LOCA analysis (Reference 208). 01511192/604000000100

The licensing basis PCT values reported in the preceding paragraph were revised per 10 CFR 50.46 report dated May 5, 2017 (Reference 231). The report identified the small break at 80% core flow as the most limiting break, with a resulting peak clad temperature of 2085 degrees F. The limiting PCT was determined using a lower MAPLHGR limit of 12.5 kw/ft. 604000000100

14.7.2.3 Emergency Core Cooling System Performance

14.7.2.3.1 ECC System Descriptions

The ECCS network consists of a High Pressure Coolant Injection (HPCI) System, the Core Spray (CS) System, the Low Pressure Coolant Injection (LPCI) mode of the Residual Heat Removal (RHR) System, and the Automatic Depressurization System (ADS).

Monticello is also equipped with a Reactor Core Isolation Cooling (RCIC) System, which is an alternative source of make-up water for the reactor. It is designed to provide adequate makeup to the reactor during normal plant shutdowns and transient events which lead to a loss of feedwater flow. The RCIC System is not part of the ECCS network.

14.7.2.3.1.1 Emergency Diesel Generators

The emergency diesel generators (EDGs) provide an alternative source of AC power in the event that the multiple redundant offsite power supplies are lost. They provide power to the emergency busses and must achieve rated operating conditions in a few seconds. The EDGs are designed to startup, achieve full speed, and be loaded within 10 secs. In order to accommodate future improvements to the EDGs, which may result in slowing the rapid start response, the EDG startup time to rated speed and voltage assumed in the ECCS-LOCA analysis was 15 secs.

The design basis, system description and performance analysis for the EDGs can be found in Section 8.4.

14.7.2.3.1.2 High Pressure Coolant Injection (HPCI) System

The HPCI System is designed to provide rated flow over a vessel pressure range of 1120 to 150 psig. The HPCI System is capable of delivering (per Table 14.7-7) a minimum of 2700 gpm of coolant to the vessel. The system is initiated on either low-low reactor water level (Level 2) or high drywell pressure. The HPCI System is powered by reactor steam, and its control requirements and motor operated valves needed for startup and operation are supplied by DC power. Consequently, it is independent of the emergency diesel generators. The HPCI System is normally aligned to take suction from the condensate storage tank and will automatically transfer to the suppression pool as an inventory supply, if necessary.

It should be noted that HPCI does not have a significant effect on the overall ECCS performance for large breaks. Large breaks depressurize the vessel before the steam-powered HPCI System has sufficient time to startup and inject a significant amount of coolant into the reactor vessel. The actual core cooling contribution of

the HPCI System for most recirculation line breaks is also small. This is because HPCI injects coolant through the feedwater sparger into the downcomer region of the vessel. Injection at this location allows the coolant flow to be diverted from the core region out the postulated recirculation line break.

Even though HPCI is available for the limiting single failure combination (LPCI injection valve failure) in the large break, the ECCS-LOCA analysis (Reference 157 and 192) does not credit HPCI for conservatism. For small recirculation line breaks, the Monticello ECCS-LOCA analyses (References 157 and 208) takes no credit for HPCI operation because the limiting failure (battery) prevents the HPCI System from initiating. 01511192

The key HPCI system analysis parameters are shown in Table 14.7-7. ECCS performance concerns no longer have a significant bearing on these parameters, since little credit was received for the HPCI System in the Monticello ECCS-LOCA analyses. Consequently, several HPCI System performance assumptions were relaxed in the Monticello ECCS-LOCA analysis. These relaxations included reducing the HPCI flow rate from 3000 to 2700 gpm, increasing the overall system startup time from 30 to 45 secs, and lowering the low-low water level initiation point to the instrument tap elevation. By relaxing the ECCS requirements and constraints imposed on the HPCI System, the plant has the flexibility to make modifications to improve the system performance and/or reliability of the HPCI System in a manner similar to that for the Emergency Diesel Generators. 01511192

14.7.2.3.1.3 Core Spray (CS) System

The Core Spray (CS) system is designed to restore and maintain the coolant in the reactor vessel in combination with other emergency core cooling systems such that the core is adequately cooled to preclude fuel damage. See Section 6.2.2 for a complete discussion of the Core Spray System design basis, system description, and performance evaluation.

The key CS parameters used in the ECCS-LOCA analyses (References 157, 192 and 208) are provided in Table 14.7-8. Some of these parameters have been modified and represent a relaxation in comparison to both the system design and the parameters assumed in the original ECCS-LOCA analysis. The rated flow for each of the two CS System loops is 3020 gpm delivered inside the core shroud with a reactor to containment differential pressure of 145 psid. However, the CS flow rate for each loop was assumed to be 2672 gpm at 130 psid containment differential pressure in the ECCS-LOCA analyses. Supplemental analyses show that the acceptance criteria of the ECCS-LOCA analysis are still met when the CS loop flow rate assumption is changed to 2700 gpm at 130 psid to account for EDG frequency uncertainty, the impact on pump discharge from NPSHr, and postulated maximum wear ring degradation (Reference 193). The ECCS-LOCA and supplemental analyses values reflect the CS flow rates which are assumed to actually inject inside the core shroud. The limiting CS flow delivery curve (CS flow inside the core shroud versus reactor vessel-to-torus differential pressure) is based on the supplemental analysis (Reference 193) and is shown in Figure 14.7-8. This delivery curve represents a quadratic fit obtained from the assumed delivery flow rate of 2700 gpm at 130 psid, pump shutoff head of 279 psid and a delivery flow of 3700 gpm at 0 psid (Reference 193 and 208). 01511192 01511192 01511192

The margins between the 2835 gpm Technical Specification flow requirement and the 2672 gpm and 2700 gpm ECCS-LOCA analysis and supplemental analysis values, respectively, are intended to account for expected pressure boundary leakage between the Core Spray loop and the core shroud. The areas of expected leakage result in flow being diverted from the Core Spray piping to the downcomer region, outside the shroud. This flow is lost out a recirculation line break. Examples of expected leakage are the Core Spray T-box vent hole (7.9 gpm), leakage at holes machined for the T-box clamp fixture (25.3 gpm), and leakage associated with P5 and P6 reactor vessel welds. In addition, excess Core Spray flow is used to offset a small shortfall in the total amount of LPCI flow (50 gpm) (References 111, 169, 170 and 171) (See Section 14.7.2.3.4).

For existing crack indications observed in the piping between the vessel and the core shroud, the worst case leakage has been determined with conservative assumptions for through wall conditions and crack growth over time. The predicted leakage and the ECCS-LOCA analyses flow requirements are totaled and the resulting flow rate is verified to be within the rated capability of the associated Core Spray pump (References 111, 158, 169, 170, 171, 193 and 208). 01511192

The CS flow rates described above are required to meet the requirements of 10 CFR 50.46 prior to the point in time where long term core cooling is credited. See discussion in USAR sections 14.7.2.1 and 14.7.2.3.6 for long term core cooling requirements.

14.7.2.3.1.4 Low Pressure Coolant Injection (LPCI) System

The LPCI is an operating mode of the multiple-purpose Residual Heat Removal (RHR) System. A portion of the LPCI initiation logic, known as the LPCI Loop Selection Logic, selects which of the two recirculation loops will receive the LPCI flow. This selection is based on comparing the pressure in the two loops to determine which one is broken. LPCI flow is then directed to the unbroken recirculation loop. The LPCI Loop Selection Logic is designed to correctly select the unbroken loop for break areas of ≥0.4 ft^2 in the recirculation line. (Reference 143, 144, 145) For smaller recirculation line breaks or non-recirculation line breaks, the LPCI Loop Selection Logic directs the LPCI flow to a predetermined default recirculation loop.

Another portion of the LPCI Loop Selection logic includes signaling the closure of the isolation valve on the discharge side of one of the reactor recirculation pumps. The closure of this valve directs the LPCI flow upward through the recirculation piping and into the vessel through the jet pump drive lines. The flow can then pass directly through the jet pumps into the lower plenum region of the vessel, ensuring an efficient inventory delivery to the lower plenum.

The RHR System is divided into two loops consisting of separate piping, pumps, and valves. Each RHR loop has two RHR pumps, and each loop is supplied by separate power sources under both normal and emergency power conditions. Flow from both loops is directed to a single injection point, located in one of the two recirculation loops, by a normally open intertie line. When operating in the LPCI mode, each RHR pump takes suction from the suppression pool. As with the CS System, the LPCI function is designed to inject coolant when the reactor pressure is relatively low. Injection at pressures above the design value of the system is prevented by a low pressure permissive on the LPCI injection valves (the pressure

permissive is intended to prevent overpressurization of the LPCI piping network). The CS and LPCI Systems provide Monticello with two completely independent and diverse sources of low pressure coolant makeup flow. Consistent with this philosophy, the LPCI System is initiated by the same redundant LOCA signals as those used to initiate the CS System.

The key LPCI parameters used in the ECCS-LOCA analyses (Reference 157, 158, 192, 193 and 208) are provided in Table 14.7-9. Some of these parameters have been modified and represent a relaxation in comparison to both the system design and the parameters assumed in the original ECCS-LOCA analysis . 01511192

The LPCI flow rate entering the vessel is dependent upon the number of pumps which are providing flow through the injection line. The two-pump flow rate was assumed to be 7740 gpm, the three pump flow rate was assumed to be 10,800 gpm and the four pump flow rate was assumed to be 12000 gpm in the ECCS-LOCA analyses. Supplemental analyses show that LPCI flow rates of 7740 gpm for two pump, 11,275 gpm for three pumps, and 14,184 gpm for four pumps at a reactor vessel-to-torus differential pressure of 20 psid, which reflect adjustments made to account for EDG frequency uncertainty, the impact on pump discharge head from NPSHr and postulated maximum wear ring degradation in excess of 10%, still satisfy the acceptance criteria of the ECCS-LOCA analysis (Reference 193). The ECCS-LOCA and supplemental analyses values reflect the LPCI flow rates which are injected into the recirculation loop with a 20 psid differential pressure between the reactor vessel and torus (Reference 193). (Note: See Section 14.7.2.3.4 for further discussion on expected system performance.) The difference between the pumped flow and that which reaches the vessel lower plenum is due to leakage from joints on the jet pump assemblies. Consequently, a conservative leakage allowance is taken to account for this effect (see section 14.7.2.3.4). The limiting LPCI flow delivery curves (LPCI flow into the core versus vessel pressure) for two-pump, three-pump and four-pump operation are based on the supplemental analysis (Reference 193) and are shown in Figure 14.7-9. These delivery curves were obtained by using a quadratic fit from the delivery flow rates determined by the supplemental analysis (Reference 193) for two, three, and four pump operation. These flow rates are listed on Table 14.7-9. 01511192 01511192

The LPCI mode of RHR is credited until long term core cooling as defined in Section 14.7.2.3.6 is satisfied. Once the core is recovered above top of active fuel (TAF) or reflooded to an indicated level of 2/3 core height, RHR is placed into a containment cooling mode of operation. Acceptable methods for containment cooling include use of containment spray, suppression pool cooling or LPCI injection cooling (Reference 155).

14.7.2.3.1.5 Automatic Depressurization System (ADS)

As indicated in Section 6.2.5, the ADS uses three of the safety relief valves (SRVs) to depressurize the reactor. The pertinent ADS parameters used in the ECCS-LOCA analyses (References 157, 192 and 208) are provided in Table 14.7-10 and ADS initiation logic is shown in Figure 14.7-10. 01511192

01511192

14.7.2.3.2 GE/GNF Single Failure Considerations

In order to determine the acceptability of the response to a LOCA, the most limiting combination of break size, location, and single failure must be determined. The single failures that are considered must reflect any failure of an ECCS component or support system which might be postulated to occur during a LOCA. The component failures typically considered for BWR-3 plants are listed below:

- An emergency diesel generator
- A DC power source (Battery)
- A LPCI injection valve
- The HPCI System
- An ADS valve

The single failure in the analysis is considered in conjunction with the unavailability of offsite power. The ECC Systems remaining available following a single failure are shown in Table 14.7-11.

Non-recirculation line breaks were also considered in the ECCS-LOCA analysis (Reference 157 and 192). These breaks are not limiting, in terms of PCT, because the breaks are located at a relatively high elevation (in comparison to the top of the core). For these breaks, the systems remaining available correspond to the systems available for the recirculation suction line break (for the same single failure) less the ECC system which injects into the broken line. The systems remaining available for the non-recirculation line breaks evaluated (core spray line, feedwater line and main steam line) are also shown in Table 14.7-11.

The ECC Systems receive emergency AC power from two diesel generators. The HPCI System is powered by DC power from station batteries. One specific DC power source failure can disable the HPCI System and one emergency diesel generator. This failure results in ADS, one Core Spray and two RHR pumps remaining available.

The single-failure evaluation and the list of available systems shown in Table 14.7-11 was in part the basis for Required Actions and Completion Times in TS 3.5.1, “Emergency Core Cooling System”, to allow a 72-hour completion time to restore a low-pressure ECCS subsystem to operable status after discovery of two low-pressure ECCS subsystem inoperable (Reference 151 and 152).

Table SNPB-5-2 of Reference 161 shows the results of all the cases used to determine the nominal and Appendix K calculated Peak Cladding Temperatures. These data include break size, power, flow, and power distribution. The limiting breaks are also identified in the table. The limiting single failures evaluated for the breaks are identified in Section 18 of Reference 158. For EPU including the MELLLA+ operating domain, the Appendix K analysis confirms the limiting break is the Recirculation Suction Line DBA Break and the associated limiting single failure is the LPCI injection valve failure.

The single-failure evaluation showing the remaining ECCS following an assumed failure and the effects of a single failure or operator error that causes any manually controlled, electrically operated valve in the ECCS to move to a position that could adversely affect the ECCS are presented in Reference 40.

14.7.2.3.3 ECCS Equipment Performance

The ECCS-LOCA analyses were performed using a relaxed set of ECCS injection timing (and other) parameters. The relaxed parameters were selected as a result of a mutual agreement between the fuel vendor and NSP prior to the start of the final ECCS-LOCA analysis calculations. 01511192

The effectiveness of the ECCS in mitigating the consequences of a LOCA depends upon the performance characteristics of the ECCS. These characteristics can be grouped into two broad categories:

- ECCS injection time, and
- inventory delivery.

ECCS injection time is defined as the time that elapses between the occurrence of a LOCA and the time that the ECCS flow enters the vessel. The injection time is controlled by a variety of parameters that are dependent not only on the equipment performance characteristics, but also on the reactor response to the LOCA (e.g., water level and vessel pressure), which is a function of the break size and location being considered. Inventory delivery is defined as the rate of ECCS flow being delivered to the vessel. Inventory delivery is controlled by both the ECCS pump and piping characteristics as well as the vessel response to a LOCA.

The ECCS-LOCA analysis is sensitive to changes in both the time of ECCS injection and the rate of inventory delivery. However, due to the relaxations incorporated into the analysis, variations in individual parameters can be tolerated without invalidating the calculated ECCS performance response. The criteria for determining acceptability is that the time of ECCS injection be no greater, and the inventory delivery no less, than that used in the licensing calculations. It is important to note that other non-LOCA effects associated with modifications to the ECCS performance characteristics must also be considered in order to determine the acceptability of a variation in any of these parameters. In order to determine the acceptability of individual parameter variations, the logic which controls ECCS injection and the parameters which control injection and inventory delivery must first be understood.

Figures 14.7-11 and 14.7-12 schematically show the ECCS initiation time logic diagrams for the CS and LPCI Systems. These logic diagrams are composed of two types of parameters: initiation signals and equipment performance parameters.

The initiation signals are plant permissives and signals which control ECCS injection. Typical initiation signals are high drywell pressure signals, low water level signals, injection valve pressure permissives, and the pump shutoff head. The initiation signals are represented as rectangles in Figures 14.7-11 and 14.7-12. The times at which the initiation signals occur depend on the vessel blowdown and break flow rates which are functions of the break location and size.

The equipment parameters represent the time required for ECCS equipment to accomplish an action. Typical equipment parameters are diesel generator start time, delay time for loading equipment on the emergency busses, and valve stroke times. Equipment parameters are represented as ellipses in Figures 14.7-11 and 14.7-12. The individual ECCS equipment parameters used for all breaks in the Monticello ECCS-LOCA analyses (References 157, 192 and 208) are listed in Table 14.7-12. 01511192

The time required to complete a path is a combination of the initiation signal times and the equipment parameter times. The longest path (longest time) in a logic diagram determines the time of ECCS injection. As shown in Figures 14.7-11 and 14.7-12, several paths are represented, each of which must be completed before ECCS can inject:

Path 1: The ECCS pumps must be at rated speed. For this to occur, the diesel generator must be started and powering the emergency busses and the pumps must be loaded on the emergency busses and allowed time to achieve rated flow.

Path 2: The injection valves must be opened. In order to open the valves, two conditions must first be satisfied: (a) Power must be established at the valves (i.e., the diesel generators must be started and powering the emergency busses), and (b) the reactor pressure must be less than the injection valve pressure permissive. Once both of these conditions are satisfied, the injection valves must have time to stroke open.

Path 3: The vessel pressure must be reduced to below the ECCS pump shutoff head. Coolant cannot be pumped into the vessel until the difference between reactor pressure and suppression pool pressure (source of ECCS coolant) is less than the pump shutoff head.

Path 4: For the LPCI system (Figure 14.7-12), a fourth logic path is included. This involves closing the recirculation discharge valve in the unbroken loop. Closure of this valve directs the LPCI flow upward through the jet pump drive lines and into the jet pumps, thereby preventing the flow from being lost out the break. In order to close the recirculation discharge valve, power must be established at the valve (i.e., the diesel generators must be started and powering the emergency busses). Once this condition is satisfied the discharge valve must have time to stroke closed. From Figures 14.7-11 and 14.7-12, equations can be developed to determine the time duration for the completion of each path. These equations are listed below. The variables are shown in Figures 14.7-11 and 14.7-12 and are defined below.

CS Logic Paths (See Figure 14.7-11)

Path 1: $T_{HDWS} + T_{HDW} + T_{DGS} + T_{DG} + T_{CSPR}$

Path 2a: $T_{HDWS} + T_{HDW} + T_{DGS} + T_{DG} + T_{CSPV} + T_{CSIV}$

Path 2b: $T_{CSPP} + T_{CSIV}$

Path 3: T_{CSPH}

LPCI Logic Paths (See Figure 14.7-12)

Path 1: $T_{HDWS} + T_{HDW} + T_{DGS} + T_{DG} + T_{CIPR}$

Path 2a: $T_{HDWS} + T_{HDW} + T_{DGS} + T_{DG} + T_{CIPV} + T_{CIIV}$

Path 2b: $T_{CIPP} + T_{CIIV}$

Path 3: T_{CIPH}

Path 4: $T_{HDWS} + T_{HDW} + T_{DGS} + T_{DG} + T_{PDV} + T_{DV}$

Initiation Signals:

T_{HDWS} = Time delay between time at which signal setpoint is reached (i.e. High Drywell Pressure) and initiating signal transmitted.

T_{HDW} = Time to reach high drywell pressure signal after LOCA initiation.

T_{CSPP} = Time for reactor pressure to drop to the pressure permissive of the CS injection valve.

T_{CSPH} = Time for reactor pressure to drop below the CS pump shutoff head.

T_{CIPP} = Time for reactor pressure to drop to the pressure permissive of the LPCI injection valve.

T_{CIPH} = Time for reactor pressure to drop below the LPCI pump shutoff head.

Equipment Parameters:

T_{DGS} = Time delay from Diesel (DG) start signal until DG begins its start sequence.

T_{DG} = Diesel generator (DG) startup time

T_{CSPR} = Time for CS pump to achieve rated speed once the DG has started (includes any sequencing delays for pump breaker closure and time for pump to reach rated speed).

T_{CSPV} = Time to receive power at the CS injection valve once the DG has started (sequence delay time).

T_{CSIV} = Time to fully stroke open the CS injection valve once it has power.

T_{CIPR} = Time for the LPCI pump to achieve rated speed once the DG has started (includes any sequencing delays for pump breaker closure and time for pump to reach rated speed).

T_{CIPV} = Time to receive power at the LPCI injection valve once the DG has started (sequence delay time).

T_{CIIV} = Time to fully stroke open the LPCI injection valve once it has power. (Note: Rated LPCI flow was assumed to begin with the LPCI injection valve greater than 50% open for Monticello.)

T_{PDV} = Time to receive power at the discharge valve once the DG has started (sequence delay time).

T_{DV} = Time to fully stroke open the discharge valve once it has power.

See Form OPL-4/5 (Reference 158) for additional information on ECCS equipment parameters and logic paths used in the GE SAFER-GESTR analyses. See the Plant Parameters Document (PPD) (Reference 228) for inputs to the AREVA ECCS-LOCA analysis. 01511192

14.7.2.3.4 Evaluation of Parameter Variations

Significant margin exists between the equipment performance parameters used in the ECCS-LOCA analyses (References 157, 192 and 208) and actual plant equipment performance. The application of this margin is extremely flexible. The key is that any set of initiation signal times and equipment parameters may be acceptable, provided that no increase occurs in the time of ECCS injection. For example, the actual CS injection valve stroke time may exceed its analytical value of 20 secs by 2 secs if the actual D/G startup time is less than its analytical value by two or more seconds. This would lead to no increase in the time of ECCS injection. This is a simplified example, but it illustrates the flexibility in applying the available ECCS margin. 01511192

The following methodology should be applied in order to determine if an equipment parameter variation, which may affect the time of ECCS injection, will be acceptable in terms of the ECCS-LOCA analysis:

1) Identify the postulated LOCA events that could be affected by the deviation.

2) Calculate the CS and LPCI injection times using the logic diagrams (Figures 14.7-11 and 14.7-12) and the equations shown in Section 14.7.2.3.3 for the affected cases. The injection time will be the longest time of all the paths for that system.

   a) Use the ECCS-LOCA analysis results to evaluate the initiation signal times.

   b) Use plant data for the equipment parameters (the equipment parameters shown in Table 14.7-12 are the values used in the ECCS-LOCA analysis).

3) Verify that the calculated injection time for the actual plant hardware is less than the analytical injection time for the ECCS-LOCA analysis.

The other performance characteristic which may effect the ECCS performance response is the ECCS inventory delivery. The flow delivery curves for the CS and LPCI systems used in the ECCS-LOCA analysis are provided in Figures 14.7-8 and 14.7-9. Deviations in these parameters or potential plant modifications can be evaluated using these flow delivery curves and the information in Sections 14.7.2.3.1.3 and 14.7.2.3.1.4.

Trading off small amounts of core spray flow for LPCI has two benefits from a calculational point of view. First, by injecting additional core spray water into the upper plenum, a pool of water will form more rapidly over the top of the fuel bundles. Second, the small reduction in LPCI injection to the lower plenum delays the time at which the lower plenum becomes subcooled. This delays Counter Current Flow Limiting breakdown at the bottom of the core (side-entry orifice) which allows liquid to be held up in the fuel bundles for a longer period of time. Both of these effects improve the heat removal capability from the fuel and are expected to result in a small reduction in the calculated PCT.

The core reflooding time is based on the combined flow of all the ECCS Systems and will not be significantly affected by small tradeoffs in the amount of water delivered by LPCI versus core spray.

Thus, it is concluded that excess core spray flow can be used to offset a small shortfall in the total amount of LPCI flow (flow delivered inside shroud plus leakage). As such, the actual flow requirement for each core spray pump has been established to be 2835 gpm at 130 psid by Technical Specifications. This increase in core spray pump performance over the ECCS-LOCA analysis flow rate of 2672 gpm at 130 psid offsets the 50 gpm leakage from LPCI plus assumptions for CS leakage. The two-pump flow rate requirement for the LPCI pumps does not have to take leakage into account and is identical to the flow rate injected inside the core shroud, 7740 gpm.

14.7.2.3.5 Reduced Power Considerations

For GE14 fuel, the MAPLHGR value is set as determined by fuel operation limits and by ARTS considerations for operation in the MELLLA domain. Operation in the MELLLA+ domain at below rated power includes a 2.6% reduction (12.6% total) in MAPLHGR limits to maintain equivalent PCT performance during LOCA events as compared to the MELLLA domain with implementation in the COLR (Reference 192). AREVA ATRIUM 10XM fuel does not require any power/flow reduction in MAPLHGR limits (References 125 and 207). 01511192 01511192

14.7.2.3.6 Long Term Core Cooling Performance

The NRC acceptance criteria for ECCS performance is contained in 10CFR50.46(b). Criterion, (b)(5), states:

> "After any calculated successful initial operation of the ECCS, the calculated core temperature shall be maintained at an acceptably low value and decay heat shall be removed for the extended period of time required by the long-lived radioactivity remaining in the core."

The requirements for long term core cooling are met by having sufficient water injection to cover the core from any ECCS system or by providing one core spray pump injecting 3020 gpm of water to the core spray sparger nozzles with the core reflooded to 2/3 core height. The break area created by large recirculation line breaks preclude flooding above 2/3 core height unless the drywell is filled. Such breaks also result in full de-pressurization of the reactor (References 157, 162, 164, and 192).

NEDO-20566A, "General Electric Company Analytical Model for Loss-of-Coolant Analysis in Accordance with 10CFR50, Appendix K" (Reference 23) presents information concerning compliance with this long-term cooling criterion that is generic to all GE BWRs.

Long-term cooling considerations for Monticello include:

- Recirculation Line Breaks. When the core refloods following the postulated LOCA, the fuel rods will return quickly to saturation temperature over their entire length. For large pipe breaks, the heat flux in the core will eventually be inadequate to maintain a two-phase water flow over the entire length of the core since the static water level inside the core shroud is approximately that of the jet pump suctions. So long as one core spray loop is available, the upper third of the core will remain wetted by the core spray water and there will be no further perforation or metal-water reaction. Table 14.7-11 summarizes the ECCS systems available for all limiting break locations and limiting ECCS single failures. The core spray break event listed in that table is not a long-term cooling concern since the core spray vessel penetrations are located well above the top of the active fuel and the core would remain covered for this event.

- Recirculation Line Break with LPCI Injection Into Recirculation Piping. Even if a core spray loop is not available long-term, with axial power peaking at mid-plane or lower, the upper region of the core will be cooled by convection to the steam generated in the still-covered region and cladding temperatures will not reach values resulting in further perforation, significant additional oxidation, or significant additional metal-water reaction. Fuel management strategies resulting in axial power peaking above mid-plane require operation of at least one core spray pump to assure adequate core cooling. At least one LPCI System is available except for a recirculation line break with failure of the LPCI injection valve. In this case, two core spray loops will be available.

- Pipe Breaks Other Than in the Recirculation System. The reactor vessel refloods for all pipe breaks other than the recirculation system, and the fuel cladding quickly cools to saturation temperature. No further perforation or metal-water reaction will result.

During the review of a deviation request pertaining to Monticello plant Emergency Operating Procedures, the NRC evaluated the above considerations relative to the adequacy of core flooding to 2/3 core height for long-term cooling. Their conclusions are discussed in a December 10, 1998 Safety Evaluation Report (Reference 109).

Following a large recirculation line break LOCA, the long-term water level in the core will be restored to the top of the jet pumps (approximately two-thirds core height). For design and licensing basis evaluations, one core spray system is assumed available to maintain 2/3 core height and provide adequate long-term cooling to the uncovered upper third of the core. Operation of at least one core spray system is required to maintain adequate long-term core cooling for breaks in which the vessel water level cannot be restored above the minimum steam cooling reactor water level (MSCRWL). For these breaks, the core is quickly reflooded with a two-phase mixture and the fuel rods are cooled to saturation temperature.

Adequate long-term core cooling is provided when the cladding temperatures are low enough to prevent further fuel rod perforations, significant additional cladding oxidation, and significant additional metal-water reaction (hydrogen generation). Two different cladding temperature criteria were used during development of the Emergency Procedure Guidelines: (1) Peak Cladding Temperature (PCT) less than 1800°F, the onset of significant metal-water reaction, and (2) PCT less than 1500°F, the onset of significant fuel rod perforations. The acceptance criteria in 10CFR50.46 require that the PCT not exceed 2200°F and that the local cladding oxidation not exceed 17% of the initial clad thickness. For reasonable time duration to recover from the event and submerge the core, a long-term PCT of less than about 1500°F is required to ensure that both licensing basis criteria are met. Without core spray, the long term cladding temperature may exceed 1500°F with a limiting top peaked core axial power shape.

In order to provide adequate long-term core cooling, the core spray system flow must be at the design “rated” system flow of 3020 gpm delivered to the core spray sparger nozzles with a reactor to containment differential pressure of 0 psid. (Break sizes large enough to preclude covering the core will depressurize the reactor). The required flow to the core is based on the original core spray sparger design and testing and relies on achieving the design flow rate through the spray nozzles. Leakage through sparger cracks, spray piping repairs and pump minimum flow lines requires a pump flow of 3388 gpm at 0 psid to insure that the original core spray sparger design flow is delivered to the nozzles.

Adequate core cooling will have been restored when the indicated RPV water level reaches 2/3 core height (top of jet pumps) on the fuel zone level instruments. Once the indicated level stabilizes at 2/3 core height, the operators may begin taking actions to align the ECCS in the post-LOCA long-term cooling configuration. The operators will not be able to determine when the channel fill actually occurs since there is a time lag between core reflooding and the existence of indicated 2/3 core height. The fuel zone instruments (the jet pump level) will lag somewhat because the core is flooding with a highly voided mixture. Initially, the spillover through the jet pump will be a two-phase mixture. Because the level instrumentation senses the collapsed level (only the liquid fraction), the level indication will show as something below 2/3 core height. It will take some additional time for the void fraction in the lower plenum and jet pump to drop and the level indication to show a stable 2/3 core height. The SAFER code results which support the ECCS-LOCA analysis include plots for jet pump level (two phase), break flow and break flow quality. Based on those plots, between a 15-60 second lag exists between the core being reflooded (channels filled) and the fuel zone instrument showing a stable 2/3 core height. A time of 300 seconds for large break is the expected time to achieve stable level indication which allows for initiation of operator actions to throttle ECCS pump flow to long term (>600 seconds) flow rates and initiate containment cooling. Throttling of RHR and CS pumps prior to exceeding 600 seconds is required to meet safety analyses assumptions for core cooling described here, for containment heat removal, and for pump reliability associated with NPSH concerns (References 155, 157, 162, 164, 176, and 192).

The NRC reviewed Monticello's assessment for meeting long-term core cooling requirements under Extended Power Uprate (EPU) conditions to 2004 MWt and concluded it was acceptable (Reference 134).

14.7.2.4 Radiological Consequences

The Loss-of-Coolant Accident radiological consequences were analyzed using Alternative Source Term methodology as provided in Regulatory Guide 1.183 (Reference 129). The accident parameters and assumptions used in the analysis (References 136-140 and 153-154 are summarized below and in USAR Table 14.7-13, and are in accordance with the guidance provided in RG 1.183.

14.7.2.4.1 Introduction

Even though fuel failures are not predicted for the LOCA sequence of events, the radiological consequences analysis assumes significant fuel damage in accordance with the guidance of RG 1.183.

The activity is released from the damaged fuel to the primary containment and then transported to the environment through three pathways. Inhalation doses are calculated separately for each pathway.

Primary-to-Secondary Containment Leakage Pathway: The primary containment is assumed to leak at the Technical Specification limit of 1.2% of containment air weight per day (La). A portion of this leakage is assumed to bypass secondary containment (SCB leakage) and is released via the MSIV/SCB Pathway; the rest is assumed to leak to the secondary containment.

MSIV/SCB Leakage Pathway: The Main Steam Pathway, consisting of the main steam isolation valves (MSIVs) and main steam line drain valves, is assumed to leak at the Technical Specification limit of 200 scfh through the main steam lines and drains to the main condenser. SCB leakage is transported through drain lines to the main condenser. The combined leakage is released from the main condenser to the Turbine Building.

ECCS Leakage Pathway: ECCS systems circulating outside primary containment are assumed to leak through system valve packing, pump seals, or flanged connections to the secondary containment.

A secondary containment positive pressure period (PPP) of 5 minutes is assumed at the beginning of the accident until the Standby Gas Treatment System (SGTS) can draw down secondary containment to a negative pressure with respect to the environment. During the PPP, releases to secondary containment are assumed to go directly to the environment. After the PPP, releases to secondary containment are processed by the SGTS to the offgas stack. Justification for 5 minute assumption is provided in Reference 15.

External shine dose from confined sources to Control Room operators is calculated and added to the Control Room inhalation dose for the total Control Room operator dose.

RG 1.183 also directs that design leakage from ECCS systems interfacing with systems with direct release to the environment be considered. This pathway, including leakage to the Condensate Storage Tanks (CSTs) and the condensate service system, was assessed as insignificant compared to the other release pathways and is not included in the analysis.

14.7.2.4.2 Source Term

The core inventory used for the LOCA analysis source term was calculated assuming operation at 2044 MWt (2004 MWt increased by 2% to account for power measurement uncertainties) and operation at the total average burnup expected for a 24-month fuel cycle. See USAR Section 14.7.8 for further discussion of the inventory development.

The core inventory available at accident time T=0 for release is shown in USAR Tables 14.7-24a, 14.7-24b, and 14.7-24c for the three different fuels, in any combination; that may be in the core. 01511192

Fission products from the damaged fuel are assumed to be released to the primary containment in two phases. The gap release phase is initiated 2 minutes after the start of the accident and lasts for one-half hour. During this phase, activity is released from the fuel rod gap with a release fraction of 0.05 of the total rod activity for noble gases, halogens, and alkali metals. A linear release of the gap activity over the phase duration is assumed.

The early in-vessel phase begins immediately following the end of the gap release phase and lasts for 1.5 hours. The release is from the damaged fuel pellets, with release fractions of 0.95 for noble gases, 0.25 for halogens, and 0.20 for alkali metals. Release fractions for the remaining nuclides are shown in USAR Table 14.7-13. A linear release of the activity over the phase duration is assumed.

The release from the fuel to the primary containment is terminated at the end of the early in-vessel phase, with total release fractions from the fuel of 1.0 for noble gases, 0.30 for halogens, and 0.25 for alkali metals.

The suppression pool pH is maintained greater than 7 (basic) post-accident by injection of sodium pentaborate from the Standby Liquid Control System, resulting in primary containment radioiodine composition of 95% cesium iodide (CsI) as an aerosol, 4.85% elemental iodine, and 0.15% organic iodide.

The source term for the MSIV/SCB Leakage pathway consists of the activity released to the primary containment, as decreased by natural deposition within the drywell. At two hours post-accident the drywell airspace is assumed to mix with the torus airspace, thus diluting the primary containment activity source. Credit is also taken for the reduction in primary containment activity by Primary-to-Secondary Containment leakage.

The source term for the Primary-to-Secondary Containment Leakage pathway consists of the activity released to the primary containment, as decreased by natural deposition within the drywell. No credit is taken for the torus airspace or for reduction in primary containment activity by releases through other pathways.

The source term for the ECCS Leakage pathway consists of the total activity released from the fuel except for the noble gases. The activity is assumed to instantaneously mix in the suppression pool at the time of release from the core, then is recirculated by ECCS systems and released through system valve packing, pump seals, flanged connections, etc. 90% of the radioiodines and all of the radionuclides other than iodine are assumed to be retained in the liquid phase, resulting in a release consisting of 10% of the radioiodines in the leaked fluid. The 10% flash

fraction is based on suppression pool liquid temperature maintained at less than 212°F. The radioiodine released from the ECCS leakage is assumed to be 97% elemental and 3% organic. No credit is taken for reduction in primary containment activity by releases through other pathways.

The source term for external shine dose to Control Room operators is the activity confined in the reactor building airspace, the activity in the airborne cloud external to the Control Room, activity deposited on the SGTS and EFT filters, and activity contained in ECCS piping recirculating reactor coolant inside the reactor building.

14.7.2.4.3 Mitigation

Natural deposition of the particulate (aerosol) activity within the drywell is credited using the Powers 10th Percentile Natural Deposition Model, reducing the amount of activity released to the MSIV/SCB and Primary-to-Secondary Leakage pathways.

Sodium pentaborate is assumed to be injected by the Standby Liquid Control System in sufficient quantity to maintain the suppression pool pH greater than 7, preventing any significant conversion of particulate radioiodine to elemental radioiodine and resulting in greater removal of radioiodine species prior to release to the environment. The injection is assumed to be completed within two hours post-accident.

No credit is assumed for suppression pool scrubbing, drywell or torus spray operation, or holdup/removal using drywell HVAC.

MSIV/SCB Leakage pathway:
For MSIV leakage, natural deposition of radioactive particulates is credited in the main steam lines and associated drains. Natural deposition is also credited for the secondary containment bypass leakage through the steam line drains. Further deposition and holdup for the combined leakage occurs in the main condenser prior to release to the environment via the Turbine Building vent.

Primary-to-Secondary Containment Leakage:
Prior to secondary containment drawdown by the Standby Gas Treatment System, this activity is released directly to the environment as a ground-level release. After secondary containment drawdown, this leakage is collected in the secondary containment and released to the environment through the SGTS to the offgas stack for a filtered elevated release. The SGTS filter efficiency is assumed at 85% for the adsorber section, which removes elemental and organic iodines, and 98% for the particulate filters.

ECCS leakage:
Prior to secondary containment drawdown by the SGTS, this activity is released directly to the environment as a ground-level release. After the secondary containment drawdown, this leakage is collected in the secondary containment and released to the environment through the SGTS to the offgas stack for a filtered elevated release.

The Control Room ventilation system emergency mode (EFT) is initiated by the LOCA signals (drywell high pressure or reactor vessel low level) prior to the accident release initiation at two minutes post-accident. The EFT filter efficiency is assumed at 98% for both the adsorber section and the particulate filters.

14.7.2.4.4 Transport

MSIV/SCB Leakage Pathway:

The total core source term is released directly into the drywell airspace from the reactor vessel. At 2 hours post-accident, the primary containment airspace is increased to include both the drywell airspace and the torus airspace resulting in lower airborne concentration.

MSIV leakage at the Technical Specification limit of 200 scfh is initially assumed to transport through two of the four main steam lines at 100 scfh each with the further assumption that the inboard MSIV has failed open on one of the two lines. This assumed failure limits the piping surface area credited for natural deposition. Natural deposition of radioactive particulates is credited for the piping between the inboard and outboard MSIV on one steam line (the one of shortest distance) and in the drain lines from two of the main steam lines to the main condenser (in the two shortest drain line paths). Since a single failure of an inboard MSIV in one steam line is assumed, natural deposition is not credited between the MSIVs in this line.

Secondary containment bypass (SCB) leakage is initially assumed at 35.2 scfh from within the drywell through drain lines to the main condenser. Natural deposition of SCB leakage in the shortest drain line path to the main condenser is assumed.

The MSIV/SCB leakage rates decrease over time due to post-accident primary containment depressurization. The leakage is assumed to be 100% (200 scfh and 35.2 scfh) for the first 24 hours, at 66% for the next 66 hours, and at 50% for the remainder of the accident, based on the post-accident pressure/temperature profile.

Deposition and holdup of the combined MSIV/SCB leakage is assumed in the main condenser. A ground level release from the main condenser via the Turbine Building vent is assumed for a duration of 30 days post-accident.

Primary-to-Secondary Containment Leakage Pathway:

The total core source term is released directly into the drywell airspace from the reactor vessel. The primary containment is assumed to leak to the secondary containment at the Technical Specification limit of 1.2% containment air weight per day, excluding the SCB leakage.

The leakage rate decreases over time due to post-accident primary containment depressurization. The leakage is assumed to be 100% (1.2% excluding SCB leakage) for the first 24 hours, at 66% for the next 66 hours, and at 50% for the remainder of the accident, based on the post-accident pressure/temperature profile.

At accident onset (T=0), the secondary containment is assumed to pressurize prior to drawdown by the SGTS. This positive pressure period (PPP) lasts for five minutes (Reference 15). During the PPP, all activity in the secondary containment is assumed to be released directly to the environment as a ground-level release. Release duration is 3 minutes since there is no activity release to the drywell for the first two minutes of the accident.

Following the PPP, the release from this pathway is through the SGTS to the offgas stack for a filtered elevated release. No credit is taken for holdup or dilution in the secondary containment.

ECCS Leakage Pathway:

The total core source term, with the exception of noble gases, is assumed to release directly into the suppression pool liquid volume. The release from the core is assumed to occur over a 2 hour period and, as released, instantaneously and homogeneously mix in the suppression pool volume. No credit for reactor vessel or recirculation system piping volumes is assumed to further dilute the activity in the suppression pool.

The suppression pool liquid is recirculated by ECCS systems and released through system valve packing, pump seals, flanged connections, etc., to the secondary containment. The leakage is assumed to flash and release 10% of its radioiodine activity, based on a suppression pool temperature of less than 212°F. Although different systems will operate for different durations over the course of the accident, a total combined leakage rate is conservatively assumed to remain constant for the entire accident duration. The leakage is based on a design rate of 1.31 gpm, which is then doubled in accordance with RG 1.183 for a total rate of 2.62 gpm.

During the PPP, all activity in the secondary containment is assumed to be released directly to the environment as a ground-level release. Release duration is 3 minutes since there is no activity release to the drywell for the first two minutes of the accident.

Following the PPP, the release from this pathway is through the SGTS to the offgas stack for a filtered elevated release. No credit is taken for holdup or dilution in the secondary containment.

Control Room ventilation is assumed in the emergency mode throughout the accident release period, with 900 cfm of EFT filtered air intake assumed. An additional 500 cfm of unfiltered inleakage is assumed. Control Room dose studies were performed at several lower air intake and unfiltered inleakage flow rates, verifying that the flow rates given above are limiting.

For the elevated release from the offgas stack, fumigation (an atmospheric condition resulting in increased ground-level exposure to accident releases) is assumed for one-half hour. In accordance with the guidance of RG 1.183, the fumigation period is assumed during the worst 2-hour period for EAB exposure (1.7 hours to 2.2 hours). For consistency, the same timing is assumed for the LPZ and Control Room dose assessments.

Control Room and offsite atmospheric dispersion coefficients are shown in USAR Table 14.7-13 (References 153 and 154).

14.7.2.4.5 Results

Control Room operator and offsite accident doses are shown in USAR Table 14.7-14.

14.7.3 Main Steam Line Break Accident Analysis

Accidents that result in the release of radioactive materials outside the secondary containment are the results of postulated breaches in the nuclear system process barrier. The design basis accident is a complete severance of one main steam line outside the secondary containment. Table 14.7-13 shows the break location. The analysis of the accident is described in three parts as follows:

a. Primary System Transient Effects

This includes analysis of the changes in primary system parameters pertinent to fuel performance and the determination of fuel damage.

b. Radioactive Material Release

This includes determination of the quantity and type of radioactive material released through the pipe break and to the environs.

c. Radiological Consequences

This portion determines the dose effects of the accident to offsite persons.

The analysis of the main steam line break accident depends on the operating thermal-hydraulic parameters of the overall reactor (such as pressure) and overall factors affecting the consequences (such as primary coolant activity). The most limiting main steam line break radiological consequences are associated with a steam line break outside containment. Consequences of the main steam line break accident are independent of fuel design, since the radioactive release is dependent on primary coolant activity and not on fuel design parameters. 01511192

14.7.3.1 Reactor Primary System Transient Effects and Mass and Energy Releases

The mass and energy release for the Main Steam line Break outside containment was calculated using the same SAFER/GESTR-LOCA model used in the Rerate (1880 MWt) ECCS-LOCA analysis for Monticello (Reference 21). There was no change in the mass and energy release for the hot standby main steam line break related to the increased power level associated with Extended Power Uprate (EPU) operation since at EPU conditions there is no increase in pressure and enthalpy in the reactor and the break locations (References 134 and 160).

The mass and energy release for the steam line break is largely determined by the amount of liquid discharged through the break. Following the break, the vessel rapidly depressurizes because the steam generation from the decay power cannot make up the steam loss through the break. The rapid depressurization causes the water in the vessel to flash and swell up to the steam lines, resulting in a steam-water mixture flowing out the break. This mixture flow continues until the MSIVs close. The core remains adequately cooled throughout the accident and no fuel damage will occur.

The steam line break flow is determined by the reactor pressure and the steam line flow restrictor area. The initial core power determines the amount of steam generation during this period, which in turn determines the depressurization rate and resulting level swell. A higher initial core power level results in a higher steam generation rate. The combination of the unchanged break flow and higher steam generation rate results in a lower vessel depressurization rate and delays the level swell. Because the MSIV closure time is constant, the delayed level swell results in less steam-water mixture being released out the break. The mass and energy release time histories for operation at 1880 MWt is shown in Table 14.7-15. Based on the preceding discussion, the total mass and energy release listed on Table 14.7-15 bounds the total mass and energy release that would occur for a break at rated EPU power level of 2004 MWt. An initial reactor pressure of 1025 psia was assumed. The MSIVs are fully closed in 10.5 secs. The Homogeneous Equilibrium Model (HEM) with a break flow multiplier of 1.2 was used to calculate the break flows for this case. No frictional losses were assumed in the break flow calculations. As described in Reference 24, the HEM is generally accepted as providing the best fit to experimental data for saturated upstream conditions. Subcooled break flow is often under predicted by the HEM without adjustment. Comparison of the blowdown data over the range of test conditions (saturated and subcooled) shows that virtually all of the test data fall within ±20% of the HEM prediction. As shown in Table 14.7-15, the break flow remains saturated throughout the event. Therefore, a multiplier of 1.2 on the break flow provides a sufficient degree of conservatism for the mass release calculations.

The case shown in Table 14.7-16 assumes an initial reactor pressure of 965 psia, equal to the turbine inlet pressure. This is the reactor pressure expected in hot standby conditions where the steam from the reactor is being directed to the condenser. The case shown in Table 14.7-17 non-mechanistically assumes an initial reactor pressure of 1158 psia (SRV opening pressure with 3% tolerance) and was used to provide a bounding release for the radiological calculations. By minimizing the steam generation from the core, hot standby conditions maximize the level swell in the vessel, thus maximizing the mass and energy release from the break. Since hot standby conditions are not affected by power, the mass and energy release rates are valid for all licensed power levels. The total integrated mass releases shown in Tables 14.7-16 and 14.7-17 are directly calculated by the SAFER code; slight round off errors were introduced when calculating the liquid and steam releases for the radiological analysis. No frictional losses were assumed in the break flow calculations. The Moody Slip break flow model was used to calculate the break flows for these cases.

The decrease in steam pressure at the turbine inlet initiates closure of the main steam line isolation valves after the break occurs (see “Primary Containment and Reactor Vessel Isolation Control System” Section 7.6.3). Also, main steam line isolation valve closure signals are generated as the differential pressures across the main steam line flow restrictors increase above isolation setpoints. The instruments sensing flow restrictor differential pressures generate isolation signals within about 600 milliseconds after the break occurs (Reference 168).

A reactor scram is initiated as the main steam line isolation valves begin to close (see “Reactor Protection System” Section 7.6.1). In addition to the scram initiated from main steam line isolation valve closure, voids generated in the moderator during depressurization contribute significant negative reactivity to the core even before the scram is complete. Because the main steam line flow restrictors are sized for the

main steam line break accident, reactor vessel water level remains above the top of the fuel throughout the transient.

14.7.3.2 Radiological Consequences

The main steam line break accident radiological consequences were analyzed using Alternative Source Term methodology as provided in Regulatory Guide 1.183 (Reference 129). The accident parameters and assumptions used in the analysis (References 16 and 136-140) are summarized below and in USAR Table 14.7-19, and are in accordance with the guidance provided in RG 1.183.

14.7.3.2.1 Introduction

The postulated accident involves a guillotine break of one of the four main steam lines outside the containment, resulting in mass loss from both ends of the break. There is no fuel damage as a consequence of this event; therefore, the only activity released to the environment is that associated with the steam and liquid discharged from the break. Initially, only steam will issue from the broken end of the steam line. Subsequently, rapid depressurization due to the break causes the reactor pressure vessel water level to rise, resulting in a steam-water mixture flowing from the break (blowdown) until the main steam isolation valves are closed.

It is assumed that the accident occurs at hot standby conditions. At these conditions, steam generation from the decay heat in the core is very low and cannot make up the steam loss through the break. The results are high rate of vessel depressurization and rapid rising of water level to the main steam line inlet. In addition to hot standby conditions, the Appendix K break flow model was assumed in order to maximize the two-phase break flow rate. Both of these assumptions yielded the maximum coolant mass releases through the break.

Hot standby (66.8 MWt) power, steam flow, and feedwater flow rate were used in the actual SAFER calculations to generate coolant mass releases. Two cases are studied: the first case assumes reactor pressure initially is at the safety relief valve opening setpoint plus 3%, 1158 psia. The second case assumes the initial reactor pressure at the pressure regulator setpoint, 965 psia. As shown in Table 14.7-18, the total integrated mass leaving the reactor pressure vessel through the break is 86152 lb. in the first case, of which 71574 lb. is liquid. In the second case it is 78617 lb., of which 66223 lb. is liquid.

For the radiological consequences analysis, the mass of coolant released is the amount of mass in the steam line and connecting lines at the time of the break plus the amount passing through the MSIVs prior to closure, as analyzed above. The mass released from the break is taken from USAR Table 14.7-18 (Hot Standby Case 1) and then scaled upward by approximately 6% for added conservatism.

14.7.3.2.2 Source Term

The AST analysis for the Main Steam Line Break Accident (MSLBA) is performed at hot standby. Hot standby power level is assumed to be 66.8 MWt. This power level provides a more conservative impact on off site dose than a full power break (Reference 16). MELLLA+/EFW does not impact the AST analysis for MSLBA (Reference 182).

There is no fuel damage as a consequence of this accident; therefore, the only activity released to the environment is that associated with the steam and liquid discharged from the break, consisting of radioiodines and noble gases

Two cases were performed based on the allowable limits for reactor coolant iodine activity in MNGP Technical Specifications. The equilibrium case assumes an activity concentration of 0.2 µCi/g dose-equivalent I-131 in the released coolant. The pre-accident iodine spike case assumes an activity concentration of 2 µCi/g dose-equivalent I-131. The radioiodine species released from the coolant are assumed to be 95% aerosol, 4.85% elemental, and 0.15% organic.

A portion of the released coolant exists as steam prior to blowdown, and as such does not contain the same iodine concentration per unit mass as the steam generated through blowdown. Therefore, it is necessary to separate the initial steam mass from the total mass released and assign a certain percentage (2% carryover is assumed) of the fission product activity contained in this portion of steam by an equivalent mass of primary coolant. See USAR Table 14.7-18 for equivalent mass. This equivalent mass does not apply to noble gases, which are released 100% from both the steam and liquid coolant.

An off-gas release rate of 300,000 µCi/sec after 30 minutes of decay is used to calculate the undecayed noble gas emission rate for the coolant release. This value exceeds the Technical Specification allowable limit for gross gamma activity by approximately 15%. The activity is assumed to consist of a standard isotopic fraction based on measurement data.

Alkali metals (Cs and Rb) were evaluated and indicated that the dose due to alkali metals in the released coolant was determined to be negligible (Reference 136).

14.7.3.2.3 Mitigation

The only mitigative action credited for the MSLBA is the termination of the release upon the automatic closure of the MSIVs. A closure time of 10.5 seconds is assumed, including valve closure time and instrument response time for break detection and valve closure initiation.

Control Room ventilation is assumed to remain in the normal operating mode throughout the event and no credit for emergency mode filtration or isolation is assumed. No credit is taken for operator action.

14.7.3.2.4 Transport

Noble gases are assumed to enter the steam phase instantaneously. The total mass of coolant released, prior to MSIV closure, is the amount in the steam line and connecting lines at the time of the break plus the amount that passes through the valves prior to closure. The radioactivity in the released coolant is assumed to be released instantaneously to the atmosphere as a ground level release from the Turbine Building vent. No credit for plateout, holdup, or dilution within the Turbine Building is assumed.

CR ventilation remains in the normal mode throughout the accident, with 7,440 cfm of CR air intake assumed, representing the maximum normal CR air intake rate (i.e., no intake blanking plates installed and no recirculation of intake). An additional

1,000 cfm of unfiltered inleakage is assumed. CR dose studies were performed at several lower air intake and unfiltered inleakage flow rates, verifying that the maximum flow rates of 7,440 cfm and 1,000 cfm are limiting.

Control Room and offsite atmospheric dispersion coefficients are shown in USAR Table 14.7-19.

14.7.3.2.5 Results

Control Room operator and offsite accident doses are shown in USAR Table 14.7-20.

14.7.4 Fuel Loading Error Accident

A loading error in the core configuration is considered to be either an error in orientation (i.e., misoriented - rotated 90° or 180°) or location (misplaced) of one or more of the bundles.

Proper orientation of fuel assemblies in the reactor core is readily verified by visual observation and assured by verification procedures during core loading. Five separate visual indications of proper fuel assembly orientation exist:

(1) The channel fastener assemblies, including the spring and guard used to maintain clearances between channels, are located at one corner of each fuel assembly adjacent to the center of the control rod.

(2) The identification boss on the fuel assembly handle points toward the adjacent control rod.

(3) The channel spacing buttons are adjacent to the control rod passage area.

(4) The assembly identification numbers which are located on the fuel assembly handles are all readable from the direction of the center of the cell.

(5) There is cell-to-cell replication.

Because of plant administrative procedures during fuel loading and the aforementioned bundle mechanical design features, the probability of a significant fuel loading error (based on the probability assessments given in Reference 42) is much less than once in a plant lifetime. Additionally, it requires multiple operator errors. Thus, the fuel loading error is classified as an accident, not a transient, so application of LHGR limits is not appropriate.

Improper loading and operation of a fuel assembly is evaluated relative to GDC 13 as it relates to instrumentation and monitoring and 10CFR50.67 as it relates to offsite consequences. The misloaded bundle accident is evaluated on a cycle-by-cycle basis. The acceptance criteria used for the reload licensing analysis is that the MCPR in the core must be greater than the safety limit MCPR with a misloaded bundle present. AREVA analyses show that this criteria is met, as well as that no fuel rods approach centerline melt or 1% strain (Reference 207). See USAR Section 14A for the current cycle Misplaced and Misoriented Fuel Loading Error Accident results.

01511192

14.7.5 One Recirculation Pump Seizure Accident Analysis

This accident is assumed to occur as a consequence of an unspecified, instantaneous stoppage of one recirculation pump shaft while the reactor is operating at full power.

The pump seizure event is a very mild accident in relation to other accidents such as the LOCA. This is easily verified by consideration of the two events. In both accidents, the recirculation driving loop flow is lost extremely rapidly - in the case of the seizure, stoppage of the pump occurs; for the LOCA, the severance of the line has a similar, but more rapid and severe influence. Following a pump seizure event, flow continues, water level is maintained, the core remains submerged, and this provides a continuous core cooling mechanism. However, for the LOCA, complete flow stoppage occurs and the water level decreases due to loss of coolant resulting in uncovery of the reactor core and subsequent overheating of the fuel rod cladding. In addition, for the pump seizure accident, reactor pressure does not significantly decrease, whereas complete depressurization occurs for the LOCA. Clearly, the increased temperature of the cladding and reduced reactor pressure for the LOCA both combine to yield a much more severe stress and potential for cladding perforation for the LOCA than for the pump seizure. Therefore, it can be concluded that the potential effects of the hypothetical pump seizure accident during two-loop operation are very conservatively bounded by the effects of a LOCA and specific analyses of the pump seizure accident are not required. 01511192

During single loop operation, however, seizure of the operating pump may be a limiting event. This event is evaluated on a cycle-dependent basis for Monticello against the acceptance criteria for plant transients. Acceptance criteria for transients are based on avoiding transition boiling and maintaining the fuel within thermal and mechanical limits. This analysis is performed assuming single loop operation. The result of this event is provided in Section 14A. 01511192

14.7.6 Refueling Accident Analysis

14.7.6.1 Identification of Causes

Accidents that result in the release of radioactive materials directly to secondary containment can occur when the drywell is open. A survey of the various conditions that could exist when the drywell is open reveals that the greatest potential for the release of radioactive material occurs when the drywell head and reactor vessel head have been removed. In this case, radioactive material released as a result of fuel failure is available for transport directly to secondary containment.

Various mechanisms for fuel failure under this condition have been investigated. With the current fuel design, refueling interlocks that impose restrictions on the movement of refueling equipment and control rods prevent an inadvertent criticality during refueling operations. Administrative procedures are also utilized to prevent an inadvertent criticality during refueling operations. In addition, the reactor protection system can initiate a reactor scram in time to prevent fuel damage for errors or malfunction occurring during planned criticality tests with the reactor vessel head off. It is concluded that the only accident that could result in the release of significant quantities of fission products to the containment during this mode of operation is one resulting from the accidental dropping of a fuel bundle onto the top of the core or onto the fuel bundles in the spent fuel pool.

Analysis has demonstrated that the accident over the core is more limiting than the accident over the spent fuel pool, provided the spent fuel pool has sufficient depth of water (Reference 136).

14.7.6.2 Effect of Fuel Densification

This event occurs under non-operating conditions for the fuel. The key assumption of this postulated occurrence is the inadvertent mechanical damage to the fuel rod cladding as a consequence of the fuel bundle being dropped on the core while in the cold condition.

Fuel densification considerations do not enter into or affect the accident results.

14.7.6.3 Radiological Consequences

The Fuel Handling Accident radiological consequences were analyzed using Alternative Source Term methodology as provided in Regulatory Guide 1.183 (Reference 129). The accident parameters and assumptions used in the analysis (References 136-140 and 175) are summarized below and in USAR Table 14.7-21, and are in accordance with the guidance provided in RG 1.183.

14.7.6.3.1 Introduction

The limiting fuel-handling accident assumes that the drywell head and the reactor vessel head are removed, and a fuel bundle was accidentally dropped on the core. The drop height into the fuel pool will be less than that into the core. Therefore, a fuel bundle dropped on top of the core results in more damaged rods.

If the depth of water above the damaged fuel is 23 feet or greater, the decontamination factors for the elemental and organic iodine species are 500 and 1, respectively, giving an overall effective decontamination factor of 200 (i.e., 99.5% of the total iodine released from the damaged rods is retained by the water). For the accident over the core in the reactor cavity, the water depth is much greater than 23 feet so a decontamination factor of 200 is assumed. Although there is less than 23 feet above damaged fuel in the spent fuel pool or the reactor flange area and therefore a lower decontamination factor, the reactor cavity accident remains bounding due to the greater amount of fuel damage in the cavity.

The number of rods assumed to fail in a fuel-handling accident is dependent both on the fuel design and the design of fuel handling equipment. Licensing analyses for GE14 fuel with 10x10 array were recently reported in GESTAR II (Reference 106) for the limiting scenario in the reactor cavity. The number of rods was calculated to be 172 for 10x10 array fuel using a bundle with a bounding weight (i.e. greater than a typical Monticello bundle). The radiological analysis conservatively assumes failure of 125 rods of GE 8x8 fuel. The relative amount of activity released for 10x10 array fuel (87.33 full length fuel rods per bundle) is (172/125)(60/87.33) = 0.95 times the activity released for a core of 8x8 fuel. Analysis of the Siemens Qualification Fuel Assemblies (QFAs) shows that, for this fuel type, the amount of radioactivity released as a result of a postulated fuel-handling accident is essentially the same as that for the GE10 bundle design (Reference 76). Some 7x7 fuel remains stored in the spent fuel pool. GESTAR II (Reference 106) reports that 111 7x7 rods would fail for a refueling accident over the core. For freshly irradiated fuel, this would be more

limiting than 8x8 fuel, since (111/125) (60/49) > 1. All 7x7 fuel has cooled for several years, however, and review of the half lives of the most important isotopes in Tables 14.7-24a, b, and c shows that this decay time readily compensates for differences between 7x7 and 8x8 refueling accident fuel rod damage results, such that the 125 failed 8x8 fuel rods remain a bounding input for the evaluation. The number of rod failures and relative releases for various 9x9 and 10x10 fuel types are reported in GESTAR II (Reference 106); all 9x9 and 10x10 fuel types used prior to GE14 have cooled for several years and have less gap activity release than the 8x8 fuel. The refueling accident analysis with regard to GE14 fuel was evaluated in References 122 and 123. It was concluded in Reference 123 that the analysis documented in this section is bounding for the use of GE14 fuel. The impact of the use of AREVA ATRIUM 10XM fuel has been evaluated. While the weight of a Monticello ATRIUM-10XM assembly is 12 lbs greater than the weight of a Monticello GE14 assembly, a heavier GE14 assembly was used in the GESTAR II analysis and the ATRIUM 10XM bundle is lighter than the GE14 assembly used in GESTAR II. The number of failed ATRIUM10 XM fuel rods was calculated to be 162, which is fewer than the 172 rods calculated for GE14 fuel. The relative amount of activity released for the ATRIUM 10XM fuel is then less than 0.95 times the activity released for a core of 8x8 fuel. Therefore, the present assumption bounds other fuel designs for fuel-handling accident analysis. 01511192 01511192 01511192

The fuel-handling accident analyzed in GESTARII assumed the accident occurred on top of the core. The analysis considered a drop height of 34 ft, resulting in 104 damaged fuel rods. Therefore, assuming 125 rods failed in the present analysis provides extra conservatism in the evaluation.

14.7.6.3.2 Source Term

The core inventory used for the FHA analysis source term was calculated assuming operation at 2044 MWt (2004 MWt increased by 2% to account for power measurement uncertainties) and operation at the total average burnup expected for a 24-month fuel cycle. See USAR Section 14.7.8 for further discussion of the inventory development.

The core inventory available at accident time T=0 for release is shown in USAR Tables 14.7-24a, 14.7-24b, and 14.7-24c for the three different fuels, in. any combination; that may be in the core. 01511192

The source term for this event is the gap activity in the 125 fuel rods assumed damaged as a result of the drop in the reactor cavity. This number of fuel pins equals approximately 0.43% of the total number of fuel rods in the reactor core (125 equivalent 8x8 fuel rods from a total of 484 core bundles with 60 rods per bundle). The total fuel rod gap activity available for release from the reactor core is based on the core inventory in USAR Tables 14.7-24a, b, and c, with a 24 hour decay period following reactor shutdown. The fraction of radionuclides in the fuel gap assumed available for release is shown in USAR Table 14.7-21. 01511192

Alkali metals (Cs, Rb) are released from the gap but are not included in the analysis source term since all particulate radionuclides are assumed to be retained in the water and no airborne alkali metals are produced as daughter products during the 2-hour event.

Of the gap activity released from the damaged fuel rods, 100% of the noble gases and a fraction of the iodines are assumed available for release. The chemical form of the radioiodine released from the fuel is 95% aerosol (CsI), 4.85% elemental and 0.15% organic. Due to the possibility of low pH in the pool, CsI is assumed to instantaneously disassociate, with the iodine re-evolving in elemental form. This results in 99.85% elemental and 0.15% organic iodine.

An overall pool Decontamination Factor (DF) of 200 is assumed for radioiodine releases. A DF of 0 (no retention) is assumed for noble gases, and an infinite DF (complete retention) is assumed for particulates.

14.7.6.3.3 Mitigation

The primary mitigation mechanisms for the fuel-handling accident are radioactive decay and decontamination of releases by water in the pool above the damaged fuel.

A 24 hour decay period is assumed prior to fuel movement. Decontamination of the radioiodine gap activity as it rises (bubbles) to the surface through the pool water above the dropped assembly in the reactor vessel is credited. For a DF of 200 the minimum required water depth over the damaged fuel is 23 ft., which is exceeded in the reactor cavity by normal refueling water level requirements. Technical Specification limits on spent fuel pool water level ensure the fuel assembly drop over the reactor core remains bounding over the fuel assembly drop in the spent fuel pool or over the reactor flange.

No other mitigating actions are assumed. No credit for radiation monitor detection of the release or subsequent isolation of secondary containment and initiation of the SBGT system are assumed. Control Room ventilation is assumed to remain in the normal operating mode throughout the event and no credit for emergency mode filtration or isolation is assumed. No credit is taken for operator action.

14.7.6.3.4 Transport

The release of the gap activity from the damaged fuel rods is assumed to occur instantaneously. Radioactivity that escapes from the pool is assumed released to the environment from the Reactor Building Vent linearly over a period of 2 hours. No credit is assumed for mixing or dilution in the secondary containment.

The release is a ground-level release from the Reactor Building Vent. The RB Vent provides a bounding and representative release point regardless of whether the RB ventilation system or SBGT are operating.

CR ventilation remains in the normal mode throughout the accident, with 7,440 cfm of CR air intake assumed, representing the maximum normal CR air intake rate (i.e., no intake blanking plates installed and no recirculation of intake). An additional 1,000 cfm of unfiltered inleakage is assumed. CR dose studies were performed at several lower air intake and unfiltered inleakage flow rates, verifying that the maximum flow rates of 7,440 cfm and 1,000 cfm are limiting.

Control Room and offsite atmospheric dispersion coefficients are shown in USAR Table 14.7-21.

14.7.6.3.5 Results

Control Room operator and offsite accident doses are shown in USAR Table 14.7-22.

14.7.7 Accident Atmospheric Dispersion Coefficients

Atmospheric dispersion factors (X/Q) provide values that represent the relative dispersion occurring between a source release location and a receptor location. The relative dispersion can then be used to determine the expected atmospheric radionuclide concentration at some defined distance from the source for a known quantity of released effluent.

14.7.7.1 Meteorological Data

Site meteorological data from the years 1998-2002 were used to calculate accident atmospheric dispersion factors. The site meteorological data collection system is described in USAR Section 2.3. The five years of data provide a representative long-term trend.

14.7.7.2 Control Room Atmospheric Dispersion Coefficients

Four release (source) points to the environment were modeled:
- Closest Reactor Building (RB) wall to the CR (ground level release)
- Reactor Building Vent (ground level release)
- Turbine Building Vent (ground level release)
- Offgas Stack (elevated release)

Two receptor locations with the potential for introducing outside air into the Control Room were modeled:
- Control Room outside air intake
- Administration Building (Admin Bldg) outside air intake

Consistent with the guidance of Regulatory Guide 1.194 (Reference 140), the meteorological data collection location closest to the release point was utilized, i.e., data collected at the 100 m height were used for the calculation of elevated releases and data collected at 43 m and 10 m were used for the calculation of ground level releases.

The calculated atmospheric dispersion coefficients (X/Q) for the two CR receptor locations are shown in USAR Table 14.7-23. In the radiological DBA analyses, the bounding (larger) source-receptor X/Q values were selected as input to the dose calculations. These bounding values were used for all outside air sources to the Control Room, including the CR ventilation normal and emergency mode air intake and CR unfiltered inleakage.

14.7.7.3 Offsite Atmospheric Dispersion Coefficients

The atmospheric dispersion coefficients for offsite receptors were calculated using the guidance of Regulatory Guide 1.145 (Reference 141).

Two source (release) points to the environment were modeled:
- Ground level release
- Elevated release (offgas stack)

The ground level release was modeled as a bounding general release from the Reactor or Turbine Buildings.

Two receptor locations were modeled:
- EAB (Exclusion Area Boundary)
- LPZ (Low Population Zone).

The calculated atmospheric dispersion coefficients (X/Q) for the EAB and LPZ are shown in USAR Table 14.7-23.

14.7.8 Core Source Term Inventory

The core inventory used for the accident analysis source terms involving fuel damage was calculated assuming operation at 2004 MWt, with 2% added for power measurement uncertainties. The Monticello core source term parameters are as follows (References 174, 163, 172 and 173):

- GE14 or ATRIUM 10XM fuel is used (whichever is more limiting on a per-event basis) 01511192
- Maximum bundle average enrichment is 4.6 wt%
- Maximum EOC core average exposure 35 (GE14 fuel only) or 37 (whichever is more limiting on a per-event basis) GWd/MT 01511192
- Maximum batch average discharge bundle exposure 58 GWd/MT
- Maximum initial bundle uranium mass 182 (GE14 fuel) or 179 (ATRIUM 10XM fuel) kg 01511192
- Maximum bundle average power 5.75 MWt (at 102% of 2004 MWt)

The core inventory available for accident release at time T=0 is shown in USAR Tables 14.7-24a, b, and c. 01511192

01511192

Table 14.7-2a CRDA Radiological Consequences Analysis Inputs and Assumptions

(Page 1 of 2)

01511192

Core Power (for establishing isotopic inventory)	2044 MWt (2004 MWt plus 2%)
Core Inventory at Accident Time T=0	USAR Tables 14.7-24a, b, and c
Radial Peaking Factor	1.7
Total Fuel Rods Damaged (8x8 equivalent rods)	850
Cladding Damaged Rods	841
Melted Rods	9
Activity Released to Coolant (cladding damaged rods):	
Halogens	10%
Noble Gases	10%
Alkali Metals	12%
Activity Released to Coolant (melted rods):	
Halogens	50%
Noble Gas	100%
Alkali Metals	25%
Percentage of Released Activity Reaching Condenser:	
Halogens	10%
Noble Gases	100%
All Other Nuclides	1%
Percentage of Condenser Activity Available for Release to Environment:	
Halogens	10%
Noble Gases	100%
All Other Nuclides	1%
Release Duration	24 hours
Control Room Airspace (Free Volume)	27,000 ft^3
EFT System Operation	Not credited
CR Outside Air Intake Rate (Normal Mode)	7,440 cfm
CR Envelope Unfiltered Inleakage Rate	1,000 cfm
Control Room Breathing Rate	3.5E-04 m^3/sec
Control Room Occupancy Rate	1.0
Offsite Breathing Rate:	
0-8 hours	3.5E-04 m^3/sec
8-24 hours	1.8E-04 m^3/sec

SJAE Release Case

Steam Jet Air Ejector Flow Rate to Offgas Stack	360.5 scfm
SJAE Release Holdup Time	17 minutes
Control Room X/Q, Elevated Release From Offgas Stack:	
0-0.5 hr (fumigation)	3.59E-4 sec/m^3
0.5-2 hrs	4.06E-06 sec/m^3
2-8 hrs	5.75E-07 sec/m^3
8-24 hrs	2.24E-07 sec/m^3
EAB X/Q, Elevated Release From Offgas Stack:	
0-0.5 hr (fumigation)	1.11E-4 sec/m^3
0.5-2 hrs (used for accident duration)	4.22E-6 sec/m^3

Table 14.7-2a CRDA Radiological Consequences Analysis Inputs and Assumptions

(Page 2 of 2)

LPZ X/Q, Elevated Release From Offgas Stack:

0-0.5 hr (fumigation)	3.86E-5 sec/m^3
0.5-2 hrs	3.79E-6 sec/m^3
2-8 hrs	2.14E-6 sec/m^3
8-24 hrs	1.61E-6 sec/m^3

Isolated Condenser Release Case

Mechanical Vacuum Pump Flow Rate 2,300 scfm
Main Steam Line Radiation Monitor Setpoint 9 R/hr
MVP Isolation Time 10 seconds
MVP Release Holdup Time 0.38 minutes
Main Condenser Leak Rate (following MVP isolation) 1% per day

Control Room X/Q (Pre-MVP Trip), MVP Elevated Release
From Offgas Stack (fumigation for 10 sec) 3.59E-4 sec/m^3
Offsite X/Q (Pre-MVP Trip), MVP Elevated Release
From Offgas Stack:
EAB (fumigation for 10 seconds) 1.11E-4 sec/m^3
LPZ (fumigation for 10 seconds) 3.86E-5 sec/m^3

Control Room X/Q (Post-MVP Trip), Ground Level Release
from Turbine Building Vent:
0-2 hrs 2.58E-3 sec/m^3
2-8 hrs 1.85E-3 sec/m^3
8-24 hrs 7.37E-4 sec/m^3
EAB X/Q (Post-MVP Trip), Ground Level Release:
0-2 hrs 7.86E-4 sec/m^3
2-8 hrs 5.08E-4 sec/m^3
8-24 hrs 4.08E-4 sec/m^3
LPZ X/Q (Post-MVP Trip), Ground Level Release:
0-2 hrs 1.53E-4 sec/m^3
2-8 hrs 8.83E-5 sec/m^3
8-24 hrs 6.71E-5 sec/m^3

Table 14.7-2b CRDA Dose Consequences (Rem TEDE)

Receptor	**Dose**	**AM 188 Dose**	**Regulatory Limit***
SJAE Release Case:			
Control Room Operator	1.89	1.89	5.0
EAB (2-hour)	2.02	2.01	6.3
LPZ	0.92	0.92	6.3
Isolated Condenser Release Case (MVP Operation with 10 Second Isolation):			
Control Room Operator	0.61		5.0
EAB (2-hour)	0.21		6.3
LPZ	0.09		6.3

*10CFR50.67 and RG 1.183

01511192

Note: See References 13, 134 and 199 for additional information.
Am 188 dose is the dose most recently approved by the NRC.

01511192

01511192

Table 14.7-3a Comparison of Nominal and Appendix K Assumption (GE)

(Page 1 of 1)

Parameters	Nominal	Appendix K
Decay Heat	1979 ANSI/ANS 5.1 (Reference 99)	1971 ANS + 20% (Reference 100)
Transient Boiling Temperature	Iloeje Correlation	Transition boiling allowed during blowdown only until cladding superheat exceeds 300°F
Break Flow	1.25 HEM(1) (Subcooled) 1.0 HEM(1) (Saturated)	Moody Slip Flow Model with discharge coefficients of 1.0, 0.8 and 0.6
Metal-Water Reaction	EPRI Coefficients	Baker-Just
Core Power - GE14 Analysis	2004 MWt	2044 MWt (102% of 2004)
Peak Linear Heat Generation Rate - GE14 Analysis	12.3 KW/ft	13.4 X 1.02 KW/ft
Bypass Leakage Coefficients	Nominal Values	Nominal Values
Initial Operating Minimum Critical Power Ratio (MCPR)(2) - GE14 Analysis	1.37	1.32
ECCS Water Enthalpy (Temperature)	88 Btu/lbm (120°F)	88 Btu/lbm (120°F)
ECCS System Performance and Single Failure Evaluation Inputs	Per OPL-4/5 (Reference 158)	Per OPL-4/5 (Reference 158)
ECCS Available	Systems remaining after worst single failure	Systems remaining after worst single failure
Stored Energy	Best Estimate GESTR-LOCA	Best Estimate GESTR-LOCA
Fuel Rod Internal Pressure	Best Estimate GESTR-LOCA	Best Estimate GESTR-LOCA

(1) HEM = Homogeneous Equilibrium Model

(2) The initial MCPR is based on a bundle power that is conservative with respect to the limiting bundle power expected during plant operation.

Note: See References 157 and 158 for additional information.

Table 14.7-3b Appendix K Assumption (AREVA)

Parameter	Appendix K
Decay Heat	1971 ANS + 20% (Reference 100)
Transient Boiling Temperature	Transition boiling allowed during blowdown only until cladding superheat exceeds 300°F
Break Flow	Moody Slip Flow Model with discharge coefficients of 1.0, 0.8, 0.6 and 0.4.
Metal-Water Reaction	Baker-Just
Core Power	2044 MWt (102% of 2004)
Peak Average Planar Linear Heat Generation	12.5 X 1.02 KW/ft
Bypass Leakage Coefficients	Nominal values
Initial Operating Minimum Critical Power Ratio	1.40
ECCS Water Temperature	90°F
ECCS System Performance and Single Failure Evaluation Inputs	Per Plant Parameters Document (Reference 225)
ECCS Available	Systems remaining after worst single failure
Stored Energy	Conservatively calculated using RODEX2
Fuel Rod Internal Pressure	Conservatively calculated using RODEX2

Note: See References 207, 208, 22 and 226 for additional information.

01511192

Table 14.7-4 Maximum Break Areas

Break Location	Break Area (ft^2)	
	GE LOCA***	AREVA LOCA****
Recirculation Suction Line	4.111**	3.679
Core Spray Line	0.21	dispositioned
Feedwater Line	0.51	dispositioned
Steam Line (Inside Containment)	1.81*	dispositioned
Steam Line (Outside Containment)	1.67*	dispositioned

01511192

* Steam line break areas are prior to MSIV Closure. Following MSIV closure the inside containment break area is reduced to 1.40 ft^2 and the outside containment break area is zero.

** Includes flow area of reactor recirculation suction line, RHR intertie line, jet pumps, and bottom head drain line.

*** See References 157 and 158 for additional information.

**** See References 207 and 208 for additional information.

01511192

01511192

Table 14.7-5a Initial Conditions for Monticello ECCS-LOCA Analysis (GE)

01511192

Plant Parameters	Nominal	Appendix K
Core Thermal Power	2004 MWt	2044 MWt (102% of 2004)
Corresponding Power (% of 2004 MWt)	100.0	102.0
Core Flow (lb/hr)*	57.6×10^6	57.6×10^6
Vessel Steam Dome Pressure (psia)	1025	1040

* The increased core flow (ICF) condition is bounded by rated core flow condition because higher core flow would result in later dryout and lower PCR than the low core flow condition (Reference 157 and 192).

Note: See References 157, 158 and 192 for additional information.

Table 14.7-5b Initial Conditions for LOCA Analyses (AREVA)

Reactor power	2044 MWt (102% of 2004)	2044 MWt (102% of 2004)	1693.4 MWt (102% of 82.5% of 2004)
Core Flow	Maximum allowed	Minimum allowed	Minimum allowed
Steam Dome Pressure	1038.7 psia	1038.7 psia	1007.5 psia

01511192

Table 14.7-6 Fuel Parameters utilized in ECCS-LOCA Analysis

Note: See References 157, 158 and 192 for additional information. 01511192

Fuel Parameter	GE/GNF Analysis	AREVA Analysis
MAPLHGR (kW/ft)	13.4x1.02	12.5 x 1.02
Worse Case Pellet Exposure for ECCS Evaluation (MWd/MTU)	16000	NA
Initial Operating MCPR	1.35/1.02	1.40
Number of Fuel Rods per Bundle	92	91
Axial Peaking Factor	Use worst case mid or top peak based on break size	Mid peak and top peak are analyzed

01511192

Note: For additional information see References 157 and 158 for GE analysis and References 207, 208, 225 and 226 for AREVA analysis.

Table 14.7-7 High Pressure Coolant Injection System Parameters

	Variable	Units	Analysis Value
a.	Operating pressure range		
	Maximum (vessel to drywell)	psid	1120
	Minimum (vessel to drywell)	psid	150
b.	Minimum flow over the entire pressure range above	gpm	2700
c.	Initiating Signals		
	Low-low water level (Level 2) (inches above vessel zero)	inches	422.5*
	or		
	High drywell pressure	psig	3.0
d.	Maximum allowed delay time from initiating signal to rated flow available and injection valve wide open	sec	45

01511192

* AREVA analysis uses 422.1

01511192

Note: See References 157 and 158 for additional information.

Table 14.7-8 Core Spray System Parameters

	Variable	Units	GE Analysis Value[1]	AREVA Analysis Value
a.	Maximum vessel pressure at which pumps can inject flow (vessel to drywell)	psid	279[2]	279
b.	Minimum Flow into Reactor Core for one CS loop at Vessel Pressure	gpm psid	2700[2] 130[2]	2700 130
c.	Run-out flow at 0 psid (vessel to drywell) for one CS pump	gpm	3700[2]	3700
d.	Initiating Signals			
	Low-low water level (Level 2) (inches above vessel zero) and low vessel pressure	inches psig	422.5 350	422.1 350
	or			
	High drywell pressure	psig	3	3
	or			
	Low-low water level (Level 2) sustained for a time period of	minute	> 24	> 20
e.	Timer setting for bypassing low reactor pressure permissive in CS pump start logic	minute	<20 (analytical limit)	< 20 analytical limit)
f.	Maximum allowable delay time from initiating signal to pump at rated speed and capable of rated flow Total system delay time from initiating signal until the system is ready to inject.	sec	38	38
g.	CS injection valve			
	Pressure at which CS injection valve may be open	psig	350	350
	CS injection valve stroke time	sec	15	15

01511192

(1) Analysis values are those evaluated in References 157 and 192, unless noted otherwise.
(2) Alternate values evaluated in Reference 193.

Note: See References 157, 158, 179, 192, 193, 208 and 225 for additional information.

01511192

Table 14.7-9 Low Pressure Coolant Injection System Parameters

(Page 1 of 2)

	Variable	Units	GE Analysis Value[1]	AREVA Analysis Value
a.	Maximum vessel pressure at which pumps can inject flow (vessel to drywell)	psid	226 – 2 pump[2] 226 – 3 pump[2] 226 – 4 pump[2]	226
b.	Minimum Pump Flow into Reactor Core			
	Vessel pressure below which listed flow rates are quoted (vessel to drywell)	psid	20[2]	20
	2 LPCI pumps operating	gpm	7740[2]	7740
	3 LPCI pumps operating	gpm	11275[2]	
	4 LPCI pumps operating	gpm	(14184)[2]	14184
c.	Run-out flow at 0 psid (vessel to drywell)			
	2 LPCI pumps operating	gpm	8038[2]	8038
	3 LPCI pumps operating	gpm	11170[2]	
	4 LPCI pumps operating	gpm	14733[2]	14733
d.	Initiating Signals			
	Low-low water level (Level 2) (inches above vessel zero)	inches	422.5	422.1
	and			
	Low drywell pressure	psig	350	350
	or			
	High drywell pressure	psig	3	3
	Low-low water level (Level 2) sustained for a time period of	minute	> 24	> 20

01511192

Table 14.7-9 Low Pressure Coolant Injection System Parameters

(Page 2 of 2)

	Variable	Units	GE Analysis Value[1]	AREVA Analysis Value
e.	Timer setting for bypassing low reactor pressure permissive in LPCI pump start logic	minute	<20 (analytical limit)	<20 (analytical limit)
f.	Total system delay time from initiating signal until the system is ready to inject	sec	53.2	53.2
g.	LPCI injection valve			
	Pressure at which LPCI injection valve may be open	psig	350	350
	LPCI injection valve stroke time	sec	69.0[3]	35*
h.	Recirculation discharge valve stroke time	sec	35.0	35
i.	Minimum recirculation break size assumed to be correctly detected by loop selection logic	ft^2	0.4	0.4

01511192

(1) Analysis values are those evaluated in References 157 and 192, unless noted otherwise.
(2) Alternate values evaluated in Reference 193.
(3) Rated LPCI flow to reactor vessel was assumed to occur at time LPCI injection value is greater than 50% open. In the ECCS-LOCA analysis, rated LPCI flow was assumed to occur at 35.0 seconds.

Note: For additional information see References 157 and 158 for GE analysis and References 207, 208, 228 and 229 for AREVA analysis.

01511192

Table 14.7-10 Automatic Depressurization System Parameters

	Variable	Units	GE Analysis Value	AREVA Analysis Value
a.	Number of ADS valves			
	Total number of relief valves with ADS function	valves	3	3
	Number of ADS relief valves used in analysis	valves	3	3
b.	Minimum ADS flow rate			
	Minimum flow rate for one valve open at below listed pressure	lb/hr	791,000	829,000 (2 valves) 800,000 (1 valve)
	Vessel Pressure at which flow capacity is quoted (vessel to suppression pool)	psig	1080	1080
c.	Initiating Signals			
	Low-low water level (Level 2) (inches above vessel zero)	inches	422.5	422.1
	and			
	Signal that at least 1 LPCI (pump discharge pressure)	psig	49.6-150	NA
	or			
	1 LPCS pump is running (pump discharge pressure)	psig	49.6-150	NA
	and			
	ADS timer delay	sec	138	138
d.	Valve pressure setpoints			
	Vessel pressure below which ADS valves close	psig	50	NA
	Vessel pressure above which ADS valves reopen	psig	100	NA

Note: For additional information see References 157 and 158 for GE analysis and References 207, 208, 228 and 229 for AREVA analysis.

01511192

Table 14.7-11 Single Failures and Available Systems

[redacted]

Note 1 Systems unavailable for each single failure are the same as the recirc suction break cases.

Note 2 Systems unavailable for each single failure are the same as the recirc suction break cases less the ECCS system in which the break occurs

Note 3 A case was evaluated where HPCI was unavailable.

Note: See References 157, 158, 192 and 208 for additional information.

01511192

Table 14.7-12 ECCS Injection Timing Parameters Used in ECCS-LOCA Analysis

Variable	Parameter	Value
T_{HDWS}(1)	Delay Time to to process high drywell pressure signal	0.0 sec
T_{HDW}(1)	Delay Time to Reach High DW Press Signal After LOCA Initiation	0.0 sec
T_{DGS}(1)	Delay Time to process start sequence	0.0 sec
T_{DG}	D/G Start Time	15.0 sec
T_{CSPR}	CS Pump Start Time	23.0 sec
T_{CSPV}	CS IV Sequencing	3.2 sec
T_{CSIV}	CS IV Stroke Time	15.0 sec
T_{CIPR}	LPCI Pump Start Time	18.0 sec
T_{CIPV}	LPCI IV Sequencing	3.2 sec
T_{CIIV}	LPCI IV Stroke Time	69.0 sec(2)
T_{PDV}	Discharge Valve Sequencing	3.2 sec
T_{DV}	Discharge Valve Stroke Time	35.0 sec

(1) Delay times T_{HDWS}, T_{HDW} and T_{DGS} are assumed to be included in the 15 sec, T_{DG}, maximum delay time from EDG start signal until bus is at rated voltage. (i.e. Both of these delay times were assumed to be 0.0 sec.)

(2) Rated LPCI flow to reactor vessel was assumed to occur at time LPCI injection valve is greater than 50% open. In the analysis, rated LPCI flow was assumed to occur at 35.0 seconds.

Note: See References 157, 158, 192 and 208 for additional information.

01511192

Table 14.7-13 LOCA Radiological Consequences Analysis Inputs and Assumptions

(Page 1 of 3)

01511192

Core Power	2044 MWt (2004 MWt plus 2%)
Core Inventory at Accident Time T=0	USAR Tables 14.7-24a, b, and c
Release Onset	T= 2 minutes
Gap Release Duration	0.5 hours
Gap Release Fractions:	
Noble Gases	0.05
Halogens	0.05
Alkali Metals	0.05
Early In-Vessel Release Duration	1.5 hours
Early In-Vessel Release Fractions:	
Noble Gases	0.95
Halogens	0.25
Alkali Metals	0.20
Tellurium Metals	0.05
Ba, Sr	0.02
Noble Metals	0.0025
Cerium Group	0.0005
Lanthanides	0.0002
Standby Liquid Control Injection:	
Completed By	T= 2 hours
Final suppression pool pH	Greater than 7
Drywell Natural Deposition	Powers 10th Percentile
Positive Pressure Period (PPP)	5 minutes (starts at T=0)
Standby Gas Treatment System (SGTS):	
Effective Filter Efficiency (Adsorber)	85%
Effective Filter Efficiency (Particulate)	98%
Primary-to-Secondary Containment Leakage Pathway	
Primary to Secondary Containment Leakage Rate (includes SCB Leakage, excludes MSIV leakage):	
0-24 hours	1.2% per day by weight (La)
24-90 hours	66% of L_a
90 hrs - 30 days	50% of L_a
Release Point:	
During PPP (3 minute release)	Directly to environment
After PPP (secondary containment negative)	Offgas stack via SGTS
ECCS Leakage Pathway	
ECCS Leakage Rate to Secondary Containment	
Design rate	1.31 gpm
Analysis rate (design rate doubled)	2.62 gpm
ECCS Leakage Radioiodine Flash Fraction	10%
Release Point:	
During PPP (3 minute release)	Directly to environment
After PPP (secondary containment negative)	Offgas stack via SGTS

Table 14.7-13 LOCA Radiological Consequences Analysis Inputs and Assumptions

(Page 2 of 3)

MSIV/SCB Leakage Pathway	
MSIV Leakage Rate:	
0-24 hours	200 scfh
24-90 hours	66% of 200 scfh
90 hrs - 30 days	50% of 200 scfh
SCB Leakage Rate:	
0-24 hours	35.2 scfh
24-90 hours	66% of 35.2 scfh
90 hrs - 30 days	50% of 35.2 scfh
Main Condenser Leak Rate	1% per day by weight
Main Steam Line Radioiodine Deposition (Aerosol, Elemental, Organic)	Well-Mixed Flow Model per RG 1.183 and AEB
98-03	
Main Condenser Radioiodine Deposition (Aerosol and Elemental):	
0-24 hours	98.62%
24-72 hours	99.09%
72 hrs - 30 days	99.31%
Release Point	Turbine Building Vent
Control Room Airspace (Free Volume)	27,000 ft^3
EFT System Operation:	
Emergency Mode operating	Prior to release onset at T= 2 min
Filter Efficiency (Adsorber)	98%
Filter Efficiency (Particulate)	98%
EFT Flow Rate	900 cfm
Unfiltered Inleakage to EFT envelope	500 cfm
Control Room Breathing Rate	3.5E-04 m^3/sec
Control Room Occupancy Rate:	
0-24 hours	1.0
1-4 days	0.6
4-30 days	0.4
Control Room X/Q, Ground Level Release from Turbine Building Vent (MSIV/SCB pathway):	
0-2 hrs	2.58E-03 sec/m^3
2-8 hrs	1.85E-03 sec/m^3
8-24 hrs	7.37E-04 sec/m^3
1-4 days	4.90E-04 sec/m^3
4-30 days	3.84E-04 sec/m^3
Control Room X/Q, Ground Level Release during PPP (Prim-Sec Cntmt and ECCS Leakage pathways):	
0-2 hrs (Rx Bldg nearest wall)	1.43E-02 sec/m^3

Table 14.7-13 LOCA Radiological Consequences Analysis Inputs and Assumptions

(Page 3 of 3)

Control Room X/Q, Elevated Release From Offgas Stack post-PPP (Prim-Sec Cntmt and ECCS Leakage pathways):	
0-1.7 hrs	4.06E-06 sec/m^3
1.7-2.2 hrs (fumigation)	3.59E-04 sec/m^3
2.2-8 hrs	5.75E-07 sec/m^3
8-24 hrs	2.24E-07 sec/m^3
1-4 days	2.90E-08 sec/m^3
4-30 days	1.54E-09 sec/m^3
Offsite Breathing Rate:	
0-8 hours	3.5E-04 m^3/sec
8-24 hours	1.8E-04 m^3/sec
1-30 days	2.3E-04 m^3/sec
EAB X/Q, Ground Level Release (MSIV/SCB release; Prim-Sec Cntmt and ECCS Leakage release during PPP):	
0-2 hours (used for accident duration)	7.86E-04 sec/m^3
EAB X/Q, Elevated Release From Offgas Stack post-PPP (Prim-Sec Cntmt/ECCS release):	
0-1.7 hrs	4.22E-06 sec/m^3
1.7-2.2 hrs (fumigation)	1.11E-04 sec/m^3
2.2 hrs-30 days	4.22E-06 sec/m^3
LPZ X/Q, Ground Level Release (MSIV/SCB release; Prim-Sec Cntmt and ECCS Leakage release during PPP):	
0-2 hrs	1.53E-04 sec/m^3
2-8 hrs	8.83E-05 sec/m^3
8-24 hrs	6.71E-05 sec/m^3
1-4 days	3.70E-05 sec/m^3
4-30 days	1.57E-05 sec/m^3
LPZ X/Q, Elevated Release From Offgas Stack post-PPP (Prim-Sec Cntmt/ECCS release):	
0-1.7 hrs	3.79E-06 sec/m^3
1.7-2.2 hrs (fumigation)	3.86E-05 sec/m^3
2.2-8 hrs	2.14E-06 sec/m^3
8-24 hrs	1.61E-06 sec/m^3
1-4 days	8.64E-07 sec/m^3
4-30 days	3.54E-07 sec/m^3

Table 14.7-14 LOCA Dose Consequences (Rem TEDE)
Reference 153 and 154

01511192

Receptor	**Dose**	**AM 188 Dose**	**Regulatory Limit***
Control Room Operator			
Internal (Inhalation) Dose	3.06	3.06	
External (Shine) Dose	0.77	0.77	
Total Dose	3.83	3.83	5.0
EAB (2-hour)	1.47	1.47	25
LPZ	2.00	1.99	25

01511192

01511192

*10CFR50.67 and RG 1.183

Note: See References 134, 153, 154 and 199 for additional information.
Am 188 dose is the dose most recently approved by the NRC.

01511192

Table 14.7-15 Mass and Energy Release for Main Steamline Break Outside Containment - 1880 MWt Power (See Note 1)

(Page 1 of 2)

Time, Seconds	Pressure, psia	Total Break Flow, lb/sec	Break Quality	Break Enthalpy, BTU/lbm	Integrated Break Flow, lb	Integrated Break Enthalpy, BTU
0.00	1025	4140	1.0000	1192	8.28	9.869E+03
0.25	1005	4058	1.0000	1193	1032	1.23 1E+06
0.50	987.3	3983	1.0000	1193	2037	2.430E+06
0.75	970.7	3914	1.0000	1194	3024	3.608E+06
1.00	955.0	3849	1.0000	1195	3994	4.767E+06
1.25	938.8	3782	1.0000	1195	4948	5.906E+06
1.50	923.5	3719	1.0000	1196	5886	7.027E+06
1.75	910.5	3665	1.0000	1196	6808	8.130E+06
2.00	898.4	3615	1.0000	1196	7718	9.219E+06
2.25	885.8	3564	1.0000	1197	8616	1.029E+07
2.50	873.3	3512	1.0000	1197	9500	1. 135E+07
2.75	863.3	3471	1.0000	1198	10370	1.240E+07
3.00	858.6	3452	1.0000	1198	11240	1.343E+07
3.25	853.7	3432	1.0000	1198	12100	1.446E+07
3.50	848.9	3412	1.0000	1198	12950	1.549E+07
3.75	844.0	3392	1.0000	1198	13800	1.651E+07
4.00	839.1	3372	1.0000	1198	14650	1.752E+07
4.25	834.1	3352	1.0000	1198	15490	1.853E+07
4.50	831.7	5611	0.2478	684.6	16630	1.949E+07
4.75	831.5	6122	0.1846	641.4	18110	2.047E+07
5.00	831.4	6199	0.1764	635.8	19650	2.145E+07
5.25	831.1	6123	0.1842	641.1	21200	2.243E+07
5.50	830.6	5972	0.1996	651.5	22710	2.341E+07
5.75	829.9	5835	0.2169	663.3	24180	2.438E+07
6.00	828.8	5704	0.2332	674.3	25630	2.535E+07
6.25	827.5	5591	0.2470	683.5	27040	2.630E+07
6.50	826.0	5515	0.2570	690.2	28420	2.726E+07
6.75	824.4	5464	0.2636	694.5	29800	2.821E+07
7.00	822.7	5429	0.2675	697.0	31160	2.915E+07
7.25	820.8	5405	0.2694	698.1	32510	3.010E+07
7.50	818.8	5391	0.2697	698.0	33860	3.104E+07
7.75	817.0	4898	0.2779	703.4	35150	3.194E+07
8.00	815.3	4338	0.2984	717.3	36300	3.276E+07
8.25	813.7	3779	0.3280	737.5	37320	3.350E+07
8.50	812.2	3224	0.3677	764.6	38190	3.416E+07
8.75	810.9	2683	0.4217	801.5	38930	3.473E+07

Table 14.7-15 Mass and Energy Release for Main Steamline Break Outside Containment - 1880 MWt Power

(Page 2 of 2)

Time, Seconds	Pressure, psia	Total Break Flow, lb/sec	Break Quality	Break Enthalpy, BTU/lbm	Integrated Break Flow, lb	Integrated Break Enthalpy, BTU
9.00	809.6	2157	0.4992	854.8	39540	3.523E+07
9.25	808.5	1652	0.6196	937.5	40010	3.565E+07
9.50	807.5	1174	0.8272	1080	40360	3.601E+07
9.75	806.7	812.1	1.000	1199	40600	3.629E+07
10.00	806.4	541.2	1.000	1199	40770	3.649E+07
10.25	806.8	270.7	1.000	1199	40870	3.661E+07
10.50	807.8	0.00	1.000	1199	40910	3.665E+07

Note 1: Total mass and energy releases at 1800 MWt bound those at 2004 MWt.

Table 14.7-16 Mass and Energy Release for Main Steamline Break Outside Containment - Hot Standby (965 psia)

(Page 1 of 3)

Time, Seconds	Pressure, psia	Total Break Flow, lb/sec	Break Quality	Break Enthalpy, BTU/lbm	Integrated Break Flow, lb	Integrated Break Enthalpy, BTU
0.0	965.0	0	1.000	1194	0	0.000E+00
0.1	957.8	3316	1.000	1194	333.1	3.978E+05
0.2	949.9	3288	1.000	1195	663.2	7.922E+05
0.3	946.7	3276	1.000	1195	991.4	1. 184E+06
0.4	943.7	3265	1.000	1195	1318	1.575E+06
0.5	940.6	3254	1.000	1195	1644	1.965E+06
0.6	937.5	3243	1.000	1195	1969	2.353E+06
0.7	934.5	3232	1.000	1195	2293	2.740E+06
0.8	931.6	3222	1.000	1195	2616	3.125E+06
0.9	928.6	3211	1.000	1195	2937	3.510E+06
1.0	925.7	3200	1.000	1196	3258	3.893E+06
1.1	922.7	3190	1.000	1196	3577	4.275E+06
1.2	919.8	3180	1.000	1196	3896	4.656E+06
1.3	916.9	3169	1.000	1196	4213	5.036E+06
1.4	914.4	6579	0.3291	748.5	4685	5.466E+06
1.5	912.5	8318	0.1959	659.5	5444	5.991E+06
1.6	911.0	9179	0.1476	627.0	6325	6.556E+06
1.7	909.6	9707	0.1224	610.0	7272	7.140E+06
1.8	908.4	10030	0.1070	599.6	8260	7.738E+06
1.9	907.2	10250	0.09674	592.5	9275	8.342E+06
2.0	906.1	10420	0.08947	587.5	10310	8.952E+06
2.1	905.0	10550	0.08420	583.8	11360	9.566E+06
2.2	903.9	10640	0.08026	581.0	12420	1.018E+07
2.3	902.9	10700	0.07731	578.9	13490	1.080E+07
2.4	901.9	10750	0.07507	577.3	14560	1.142E+07
2.5	900.9	10790	0.07340	576.0	15640	1.204E+07
2.6	899.9	10810	0.07215	575.0	16720	1.267E+07
2.7	898.9	10830	0.07128	574.3	17800	1.329E+07
2.8	897.9	10840	0.07069	573.7	18880	1.391E+07
2.9	896.9	10840	0.07033	573.3	19960	1.453E+07
3.0	896.0	10830	0.07017	573.1	21050	1.515E+07
3.1	895.0	10830	0.07017	573.0	22130	1.577E+07
3.2	894.0	10820	0.07032	572.9	23210	1.639E+07
3.3	893.0	10800	0.07058	572.9	24290	1.701E+07
3.4	892.0	10790	0.07095	573.0	25370	1.763E+07
3.5	891.0	10770	0.07141	573.2	26450	1.825E+07
3.6	890.0	10750	0.07194	573.4	27530	1.886E+07
3.7	889.0	10730	0.07254	573.7	28600	1.948E+07
3.8	888.0	10700	0.07320	573.9	29670	2.010E+07
3.9	887.0	10680	0.07392	574.3	30740	2.071E+07

Table 14.7-16 Mass and Energy Release for Main Steamline Break Outside Containment - Hot Standby (965 psia)

(Page 2 of 3)

Time, Seconds	Pressure, psia	Total Break Flow, lb/sec	Break Quality	Break Enthalpy, BTU/lbm	Integrated Break Flow, lb	Integrated Break Enthalpy, BTU
4.0	886.0	10650	0.07469	574.6	31810	2.132E+07
4.1	885.0	10620	0.07550	575.0	32870	2.193E+07
4.2	884.0	10600	0.07634	575.4	33930	2.254E+07
4.3	882.9	10570	0.07724	575.9	34990	2.315E+07
4.4	881.9	10540	0.07817	576.4	36050	2.376E+07
4.5	880.8	10510	0.07913	576.9	37100	2.437E+07
4.6	879.8	10470	0.08010	577.3	38150	2.497E+07
4.7	878.7	10440	0.08112	577.9	39190	2.558E+07
4.8	877.7	10410	0.08217	578.4	40240	2.618E+07
4.9	876.6	10370	0.08323	579.0	41280	2.678E+07
5.0	875.5	10340	0.08432	579.6	42310	2.738E+07
5.1	874.4	10300	0.08541	580.1	43340	2.798E+07
5.2	873.3	10270	0.08653	580.7	44370	2.858E+07
5.3	872.2	10230	0.08769	581.3	45400	2.917E+07
5.4	871.1	10190	0.08884	581.9	46420	2.977E+07
5.5	869.9	10160	0.09007	582.6	47430	3.036E+07
5.6	868.8	10120	0.09123	583.2	48450	3.095E+07
5.7	867.7	10080	0.09248	583.9	49460	3.154E+07
5.8	866.6	10040	0.09374	584.6	50460	3.213E+07
5.9	865.4	10000	0.09498	585.2	51470	3.271E+07
6.0	864.3	9960	0.09629	586.0	52460	3.330E+07
6.1	863.1	9918	0.09763	586.7	53460	3.388E+07
6.2	861.9	9875	0.09900	587.5	54450	3.446E+07
6.3	860.7	9834	0.1004	588.2	55430	3.504E+07
6.4	859.5	9794	0.1019	589.0	56410	3.562E+07
6.5	858.3	9753	0.1034	589.9	57390	3.619E+07
6.6	857.0	9711	0.1049	590.8	58360	3.677E+07
6.7	855.8	9667	0.1066	591.7	59330	3.734E+07
6.8	854.6	9622	0.1082	592.6	60300	3.791E+07
6.9	853.3	9577	0.1099	593.6	61260	3.848E+07
7.0	852.1	9532	0.1116	594.6	62210	3.905E+07
7.1	850.8	9486	0.1134	595.6	63160	3.961E+07
7.2	849.5	9437	0.1152	596.6	64110	4.018E+07
7.3	848.2	9390	0.1170	597.7	65050	4.074E+07
7.4	846.9	9340	0.1189	598.8	65990	4.130E+07
7.5	845.6	9292	0.1207	599.8	66920	4.186E+07
7.6	844.3	8955	0.1229	601.1	67830	4.241E+07
7.7	843.0	8580	0.1258	602.9	68710	4.293E+07
7.8	841.8	8199	0.1293	605.1	69550	4.344E+07

Table 14.7-16 Mass and Energy Release for Main Steamline Break Outside Containment - Hot Standby (965 psia)

(Page 3 of 3)

Time, Seconds	Pressure, psia	Total Break Flow, lb/sec	Break Quality	Break Enthalpy, BTU/lbm	Integrated Break Flow, lb	Integrated Break Enthalpy, BTU
8.0	839.5	7418	0.1383	610.9	71110	4.439E+07
8.1	838.3	7024	0.1436	614.4	71830	4.483E+07
8.2	837.3	6627	0.1496	618.3	72510	4.525E+07
8.3	836.2	6245	0.1564	622.7	73160	4.565E+07
8.4	835.2	5867	0.1636	627.6	73760	4.603E+07
8.5	834.2	5488	0.1717	633.0	74330	4.639E+07
8.6	833.2	5109	0.1807	639.0	74860	4.672E+07
8.7	832.3	4728	0.1910	645.9	75350	4.704E+07
8.8	831.4	4351	0.2027	653.7	75800	4.733E+07
8.9	830.6	3990	0.2158	662.6	76220	4.761E+07
9.0	829.8	3624	0.2315	673.2	76600	4.786E+07
9.1	829.0	3257	0.2498	685.6	76940	4.810E+07
9.2	828.2	2906	0.2720	700.7	77250	4.831E+07
9.3	827.5	2555	0.2981	718.5	77530	4.850E+07
9.4	826.9	2217	0.3308	740.8	77760	4.868E+07
9.5	826.2	1886	0.3719	768.9	77970	4.883E+07
9.6	825.7	1564	0.4265	806.1	78140	4.897E+07
9.7	825.2	1254	0.5010	857.1	78280	4.908E+07
9.8	824.7	961.3	0.6099	931.7	78390	4.918E+07
9.9	824.3	682.8	0.7912	1056	78470	4.926E+07
10.0	823.9	475.2	1.0000	1199	78530	4.933E+07
10.1	823.7	380.2	1.0000	1199	78570	4.938E+07
10.2	823.5	285.4	1.0000	1199	78600	4.942E+07
10.3	823.5	190.5	1.0000	1199	78630	4.945E+07
10.4	823.5	95.75	1.0000	1199	78640	4.946E+07
10.5	823.6	0.9482	1.0000	1199	78650	4.947E+07
10.52	823.7	0.0	1.0000	1199	78650	4.947E+07
7.9	840.6	7809	0.1335	607.8	70350	4.393E+07

Table 14.7-17 Mass and Energy Release for Main Steamline Break Outside Containment - Hot Standby (1158 psia)

(Page 1 of 3)

Time, Seconds	Pressure, psia	Total Break Flow, lb/sec	Break Quality	Break Enthalpy, BTU/lbm	Integrated Break Flow, lb	Integrated Break Enthalpy, BTU
0.0	1158	0.0	1.0000	1187	0.0	0.000E+00
0.1	1148	4010	1.0000	1187	403.1	4.784E+05
0.2	1138	3973	1.0000	1187	802.2	9.522E+05
0.3	1133	3956	1.0000	1188	1199	1.423E+06
0.4	1128	3937	1.0000	1188	1593	1.892E+06
0.5	1122	3915	1.0000	1188	1986	2.358E+06
0.6	1117	3895	1.0000	1188	2376	2.822E+06
0.7	1111	3874	1.0000	1189	2765	3.284E+06
0.8	1106	3854	1.0000	1189	3151	3.743E+06
0.9	1100	3834	1.0000	1189	3535	4.200E+06
1.0	1095	3815	1.0000	1189	3918	4.655E+06
1.1	1091	6348	0.4638	849.9	4367	5.131E+06
1.2	1088	8617	0.2492	713.8	5135	5.715E+06
1.3	1086	9696	0.1818	670.8	6058	6.350E+06
1.4	1084	10310	0.1478	649.0	7061	7.011E+06
1.5	1082	10730	0.1274	635.9	8115	7.687E+06
1.6	1081	11010	0.1139	627.1	9203	8.374E+06
1.7	1079	11190	0.1046	620.9	10310	9.067E+06
1.8	1078	11340	0.0977	616.4	11440	9.764E+06
1.9	1076	11450	0.0927	613.0	12580	1.046E+07
2.0	1075	11530	0.0889	610.4	13730	1.117E+07
2.1	1073	11590	0.0860	608.4	14890	1.187E+07
2.2	1072	11630	0.0838	606.8	16050	1.258E+07
2.3	1070	11660	0.0822	605.6	17210	1.328E+07
2.4	1069	11680	0.0810	604.6	18380	1.399E+07
2.5	1068	11690	0.0802	603.9	19550	1.470E+07
2.6	1066	11700	0.0797	603.4	20720	1.540E+07
2.7	1065	11690	0.0795	603.1	21890	1.611 E+07
2.8	1064	11690	0.0794	602.9	23060	1.681E+07
2.9	1062	11680	0.0796	602.8	24220	1.752E+07
3.0	1061	11660	0.0799	602.8	25390	1.822E+07
3.1	1059	11640	0.0803	602.9	26560	1.892E+07
3.2	1058	11620	0.0808	603.0	27720	1.962E+07
3.3	1057	11600	0.0815	603.3	28880	2.032E+07
3.4	1055	11570	0.0822	603.5	30040	2.102E+07
3.5	1054	11540	0.0830	603.9	31190	2.172E+07
3.6	1053	11510	0.0839	604.2	32350	2.242E+07
3.7	1051	11480	0.0848	604.7	33500	2.311E+07
3.8	1050	11450	0.0858	605.1	34640	2.380E+07
3.9	1048	11410	0.0869	605.6	35790	2.450E+07
4.0	1047	11380	0.0880	606.1	36920	2.519E+07
4.1	1045	11340	0.0891	606.6	38060	2.588E+07
4.2	1044	11300	0.0903	607.2	39190	2.656E+07

Table 14.7-17 Mass and Energy Release for Main Steamline Break Outside Containment - Hot Standby (1158 psia)

(Page 2 of 3)

Time, Seconds	Pressure, psia	Total Break Flow, lb/sec	Break Quality	Break Enthalpy, BTU/lbm	Integrated Break Flow, lb	Integrated Break Enthalpy, BTU
4.3	1042	11260	0.0915	607.8	40320	2.725E+07
4.4	1041	11230	0.0927	608.4	41450	2.793E+07
4.5	1039	11180	0.0940	609.0	42570	2.861E+07
4.6	1038	11140	0.0953	609.6	43680	2.929E+07
4.7	1036	11100	0.0967	610.3	44790	2.997E+07
4.8	1035	11060	0.0980	611.0	45900	3.065E+07
4.9	1033	11020	0.0994	611.7	47010	3.132E+07
5.0	1032	10980	0.1008	612.4	48110	3.200E+07
5.1	1030	10930	0.1022	613.1	49200	3.267E+07
5.2	1029	10890	0.1037	613.8	50290	3.334E+07
5.3	1027	10850	0.1052	614.6	51380	3.401E+07
5.4	1026	10810	0.1067	615.3	52460	3.467E+07
5.5	1024	10770	0.1082	616.1	53540	3.534E+07
5.6	1022	10720	0.1097	616.9	54620	3.600E+07
5.7	1021	10680	0.1113	617.7	55690	3.666E+07
5.8	1019	10640	0.1129	618.5	56750	3.732E+07
5.9	1017	10590	0.1145	619.3	57810	3.797E+07
6.0	1016	10550	0.1162	620.2	58870	3.863E+07
6.1	1014	10500	0.1178	621.0	59920	3.928E+07
6.2	1012	10450	0.1196	622.0	60970	3.993E+07
6.3	1011	10400	0.1214	623.0	62010	4.058E+07
6.4	1009	10350	0.1234	624.0	63050	4.123E+07
6.5	1007	10300	0.1254	625.1	64080	4.187E+07
6.6	1006	10240	0.1274	626.2	65110	4.252E+07
6.7	1004	10180	0.1296	627.3	66130	4.316E+07
6.8	1002	10130	0.1317	628.5	67150	4.379E+07
6.9	1000	10070	0.1339	629.7	68160	4.443E+07
7.0	998.7	10010	0.1362	630.9	69160	4.506E+07
7.1	996.9	9949	0.1385	632.2	70160	4.569E+07
7.2	995.1	9887	0.1408	633.5	71150	4.632E+07
7.3	993.3	9824	0.1432	634.8	72140	4.695E+07
7.4	991.5	9760	0.1456	636.2	73110	4.757E+07
7.5	989.6	9696	0.1480	637.5	74090	4.819E+07
7.6	987.8	9332	0.1509	639.2	75040	4.880E+07
7.7	986.0	8935	0.1547	641.4	75950	4.938E+07
7.8	984.3	8531	0.1593	644.2	76830	4.994E+07
7.9	982.6	8122	0.1646	647.5	77660	5.048E+07
8.0	9810	7709	0.1707	651.3	78450	5.099E+07
8.1	979.4	7294	0.1776	655.5	79200	5.148E+07
8.2	977.9	6877	0.1852	660.4	79910	5.195E+07
8.3	976.4	6458	0.1937	665.7	80570	5.239E+07
8.4	975.0	6044	0.2032	671.8	81200	5.281E+07

Table 14.7-17 Mass and Energy Release for Main Steamline Break Outside Containment - Hot Standby (1158 psia)

(Page 3 of 3)

Time, Seconds	Pressure, psia	Total Break Flow, lb/sec	Break Quality	Break Enthalpy, BTU/lbm	Integrated Break Flow, lb	Integrated Break Enthalpy, BTU
8.5	973.5	5644	0.2137	678.5	81780	5.320E+07
8.6	972.2	5245	0.2253	686.0	82330	5.357E+07
8.7	970.9	4846	0.2383	694.3	82830	5.392E+07
8.8	969.7	4450	0.2529	703.8	83290	5.425E+07
8.9	968.5	4071	0.2697	714.7	83720	5.455E+07
9.0	967.3	3685	0.2895	727.6	84110	5.483E+07
9.1	966.2	3309	0.3129	742.8	84460	5.508E+07
9.2	965.2	2938	0.3407	761.0	84770	5.532E+07
9.3	964.2	2576	0.3747	783.2	85040	5.553E+07
9.4	963.3	2226	0.4156	810.1	85280	5.572E+07
9.5	962.4	1884	0.4685	844.8	85490	5.589E+07
9.6	961.7	1559	0.5354	888.8	85660	5.604E+07
9.7	961.0	1240	0.6339	953.5	85800	5.617E+07
9.8	960.3	939.4	0.7782	1048	85910	5.627E+07
9.9	959.7	667.5	1.0000	1194	85990	5.636E+07
10.0	959.3	556.1	1.0000	1194	86050	5.644E+07
10.1	959.0	445.0	1.0000	1194	86100	5.650E+07
10.2	958.8	333.9	1.0000	1194	86140	5.654E+07
10.3	958.7	223.0	1.0000	1194	86160	5.658E+07
10.4	958.7	112.0	1.0000	1194	86180	5.660E+07
10.5	958.9	1.110	1.0000	1194	86190	5.660E+07
10.5	959.0	0.0	1.0000	1194	86190	5.660E+07

Table 14.7-18 Mass Release from MSLBA - Hot Standby

	Case 1	Case 2
Power level before accident (MWt)	66.8	66.8
Initial reactor pressure (psia)	1158	965
Total mass released through break (lbm)	86,152	78,617
Total steam released through break (lbm)	14,578	12,394
Total liquid released through break (lbm)	71,574	66,223
Time for water level to cover steamline (sec)	1.04	1.32
Initial steam released before steamline is covered (lbm)	4030	4243
Equivalent liquid released from break (lbm)	82,203	74,459

Table 14.7-19 MSLBA Radiological Consequences Analysis Inputs and Assumptions

Power Level	66.8 MWt (Hot Standby)
Release Duration (MSIV Closure Time)	10.5 seconds
Total Mass Release	91,834 lbm
Liquid Mass Release	76,295 lbm
Total Steam Mass Release	15,540 lbm
Initial Steam Mass Release (2% iodine carryover)	4,296 lbm
Equivalent Mass Release (for Iodines)	87,625 lbm
Iodine Concentration:	
Equilibrium Case	0.2 μCi/g Dose Equivalent I-131
Pre-Accident Iodine Spike Case	2.0 μCi/g Dose Equivalent I-131
Noble Gas Offgas Release Rate	300,000 μCi/sec @30 min delay
Noble Gas Offgas Release Fraction:	
Kr-83m	9.36E-03
Kr-85m	1.64E-02
Kr-85	6.40E-05
Kr-87	5.11E-02
Kr-88	5.24E-02
Kr-89	2.18E-01
Xe-131m	5.23E-05
Xe-133m	7.82E-04
Xe-133	2.19E-02
Xe-135m	6.41E-02
Xe-135	5.92E-02
Xe-137	2.88E-01
Xe-138	2.18E-01
Normal Reactor Coolant Concentration (μCi/cc):	
1-131	4.06E-03
1-132	1.78E-02
1-133	1.50E-02
1-134	3.83E-02
1-135	1.35E-02
Control Room Airspace (Free Volume)	27,000 ft^3
EFT System Operation	Not credited
CR Outside Air Intake Rate (Normal Mode)	7,440 cfm
CR Envelope Unfiltered Inleakage Rate	1,000 cfm
Control Room X/Q, Ground Level Release from Turbine Building Vent (0-2 hr)	2.58E-03 sec/m^3
Control Room Breathing Rate	3.5E-04 m^3/sec
Control Room Occupancy Rate	1.0
Offsite X/Q, Ground Level Release	
EAB (0-2 hr)	7.86E-04 sec/m^3
LPZ (0-2 hr)	1.53E-04 sec/m^3
Offsite Breathing Rate	3.5E-04 m^3/sec

Table 14.7-20 MSLBA Dose Consequences (Rem TEDE)

Receptor	**Dose**	**Regulatory Limit***
Equilibrium Case		
Control Room Operator	0.33	5.0
EAB (2-hour)	0.11	2.5
LPZ	0.02	2.5
Pre-Accident Iodine Spike Case		
Control Room Operator	3.25	5.0
EAB (2-hour)	1.05	25
LPZ	0.20	25

*10CFR50.67 and RG 1.183

Note: See Reference 134 for additional information.

Table 14.7-21 FHA Radiological Consequences Analysis Inputs and Assumptions

Core Power (for establishing isotopic inventory)	2044 MWt (2004 MWt plus 2%)
Limiting Accident Location	Reactor cavity
Fuel Damage for Limiting Accident	125 rods of equivalent 8x8 fuel
Radial Peaking factor	1.7
Decay time (time since reactor shutdown)	24 hours
Core inventory (Ci/MWt) at T=0 (reactor shutdown)	USAR Tables 14.7-24a, b, and c
Percent of Activity Released from Damaged Rods:	
I-131	8
Kr-85	10
Other Noble Gases	5
Other Halogens	5
Water depth over damaged fuel	>23 feet
Overall Iodine Decontamination Factor (DF)	200
Release Duration	2 hours
Secondary Containment, SBGT System Operation	Not credited
Control Room Airspace (Free Volume)	27,000 ft^3
EFT System Operation	Not credited
CR Outside Air Intake Rate (Normal Mode)	7,440 cfm
CR Envelope Unfiltered Inleakage Rate	1,000 cfm
Control Room X/Q, Ground Level Release from Reactor Building Vent (0-2 hr)	2.48E-03 sec/m^3
Control Room Breathing Rate	3.5E-04 m^3/sec
Control Room Occupancy Rate	1.0
Offsite X/Q, Ground Level Release:	
EAB (0-2 hr)	7.86E-04 sec/m^3
LPZ (0-2 hr)	1.53E-04 sec/m^3
Offsite Breathing Rate	3.5E-04 m^3/sec

01511192

Table 14.7-22 FHA Dose Consequences (Rem TEDE) Reference 175

01511192

Receptor	**Dose**	**AM 188 Dose**	**Regulatory Limit***
Control Room Operator	4.67	4.67	5.0
EAB (2-hour)	1.76	1.74	6.3
LPZ	0.34	0.34	6.3

*10CFR50.67 and RG 1.183

Note: See References 134, 175, and 199 for additional information.
AM 188 dose is the dose most recently approved by the NRC.

01511192

Table 14.7-23 Atmospheric Dispersion Factors (X/Q) for Accident Analysis (sec/m^3)

(Page 1 of 2)

Control Room	**Control Room Intake**	**Admin Bldg Intake**
Elevated Release - Offgas Stack:		
Fumigation	3.37E-04	3.59E-04*
0-2 hrs	3.77E-06	4.06E-06*
2-8 hrs	5.74E-07	5.75E-07*
8-24 hrs	2.24E-07*	2.17E-07
1-4 days	2.90E-08*	2.60E-08
4-30 days	1.54E-09*	1.24E-09
Ground Level Release - Turbine Building Vent:		
0-2 hrs	2.51E-03	2.58E-03*
2-8 hrs	1.73E-03	1.85E-03*
8-24 hrs	6.86E-04	7.37E-04*
1-4 days	4.70E-04	4.90E-04*
4-30 days	3.52E-04	3.84E-04*
Ground Level Release - Reactor Building Vent:		
0-2 hrs	2.48E-03*	2.47E-03
2-8 hrs	1.81E-03*	1.76E-03
8-24 hrs	6.58E-04*	6.31E-04
1-4 days	4.67E-04*	4.57E-04
4-30 days	3.49E-04*	3.41E-04
Ground Level Release - Reactor Building Nearest Wall to CR Intake (used for LOCA Positive Pressure Period):		
0-2 hrs	1.00E-02	1.43E-02*
2-8 hrs	7.09E-03	9.69E-03*
8-24 hrs	2.75E-03	3.82E-03*
1-4 days	1.90E-03	2.65E-03*
4-30 days	1.42E-03	1.98E-03*

*Bounding receptor for use in radiological consequences analyses.

Offsite - Exclusion Area Boundary (EAB)	
Elevated Release - Offgas Stack:	
Fumigation	1.11E-04
0-2 hrs	4.22E-06
2-8 hrs	2.23E-06
8-24 hrs	1.67E-06
1-4 days	7.88E-07
4-30 days	3.11E-07
Ground Level Release:	
0-2 hrs	7.86E-04
2-8 hrs	5.08E-04
8-24 hrs	4.08E-04
1-4 days	2.54E-04
4-30 days	1.29E-04

Table 14.7-23 Atmospheric Dispersion Factors (X/Q) for Accident Analysis (sec/m^3)

(Page 2 of 2)

Offsite - Low Population Zone (LPZ)

Elevated Release - Offgas Stack:	
Fumigation	3.86E-05
0-2 hrs	3.79E-06
2-8 hrs	2.14E-06
8-24 hrs	1.61E-06
1-4 days	8.64E-07
4-30 days	3.54E-07
Ground Level Release	
0-2 hrs	1.53E-04
2-8 hrs	8.83E-05
8-24 hrs	6.71E-05
1-4 days	3.70E-05
4-30 days	1.57E-05

Note: See References 177 and 178 for additional information.

01511192

Table 14.7-24a Core Inventory for GE14 Fuel at 35 GWD/MT Exposure @ T = 0 Hours in Ci/MWt (Reference 167)

Nuclide	Activity	Nuclide	Activity	Nuclide	Activity
Co-58	1.379E+02	Ru-103	4.049E+04	Cs-136	1.863E+03
Co-60	1.329E+02	Ru-105	2.708E+04	Cs-137	3.470E+03
Kr-85	3.327E+02	Ru-106	1.409E+04	Ba-139	4.965E+04
Kr-85m	7.383E+03	Rh-105	2.461E+04	Ba-140	4.774E+04
Kr-87	1.424E+04	Sb-127	2.795E+03	La-140	4.915E+04
Kr-88	2.005E+04	Sb-129	8.518E+03	La-141	4.530E+04
Rb-86	6.346E+01	Te-127	2.838E+03	La-142	4.388E+04
Sr-89	2.684E+04	Te-127m	3.703E+02	Ce-141	4.534E+04
Sr-90	2.637E+03	Te-129	8.381E+03	Ce-143	4.228E+04
Sr-91	3.365E+04	Te-129m	1.243E+03	Ce-144	3.682E+04
Sr-92	3.621E+04	Te-131m	3.842E+03	Pr-143	4.134E+04
Y-90	2.805E+03	Te-132	3.817E+04	Nd-147	1.807E+04
Y-91	3.439E+04	I-131	2.677E+04	Np-239	5.223E+05
Y-92	3.636E+04	I-132	3.896E+04	Pu-238	9.040E+01
Y-93	4.177E+04	I-133	5.513E+04	Pu-239	1.086E+01
Zr-95	4.851E+04	I-134	6.087E+04	Pu-240	1.408E+01
Zr-97	4.993E+04	I-135	5.174E+04	Pu-241	4.092E+03
Nb-95	4.869E+04	Xe-133	5.478E+04	Am-241	4.610E+00
Mo-99	5.124E+04	Xe-135	2.532E+04	Cm-242	1.085E+03
Tc-99m	4.537E+04	Cs-134	5.346E+03	Cm-244	5.238E+01

NOTE: Data are from Reference 163 with the exception of Co-58 and Co-60 which were obtained from the BWR default source term values from Table 1.4.3.2-3 of Reference 166.

Table 14.7-24b Core Inventory for ATRIUM 10XM Fuel @ T = 0 Hours in Ci/MWt (Reference 172)

Nuclide	Activity	Nuclide	Activity	Nuclide	Activity
Co-58	1.38E+02	Ru-103	4.08E+04	Cs-136	1.52E+03
Co-60	1.33E+02	Ru-105	2.70E+04	Cs-137	4.99E+03
Kr-85	4.96E+02	Ru-106	1.50E+04	Ba-139	4.94E+04
Kr-85m	7.33E+03	Rh-105	2.54E+04	Ba-140	4.79E+04
Kr-87	1.45E+04	Sb-127	2.35E+03	La-140	4.99E+04
Kr-88	1.95E+04	Sb-129	7.30E+03	La-141	4.48E+04
Rb-86	4.51E+01	Te-127	2.32E+03	La-142	4.34E+04
Sr-89	2.70E+04	Te-127m	3.96E+02	Ce-141	4.53E+04
Sr-90	3.98E+03	Te-129	6.83E+03	Ce-143	4.24E+04
Sr-91	3.40E+04	Te-129m	1.32E+03	Ce-144	3.95E+04
Sr-92	3.62E+04	Te-131m	5.05E+03	Pr-143	4.14E+04
Y-90	4.10E+03	Te-132	3.81E+04	Nd-147	1.80E+04
Y-91	3.51E+04	I-131	2.67E+04	Np-239	4.56E+05
Y-92	3.66E+04	I-132	3.90E+04	Pu-238	8.43E+01
Y-93	4.10E+04	I-133	5.53E+04	Pu-239	1.15E+01
Zr-95	4.65E+04	I-134	6.24E+04	Pu-240	1.87E+01
Zr-97	4.62E+04	I-135	5.26E+04	Pu-241	4.08E+03
Nb-95	4.68E+04	Xe-133	5.42E+04	Am-241	6.16E+00
Mo-99	5.03E+04	Xe-135	2.44E+04	Cm-242	1.31E+03
Tc-99m	4.45E+04	Cs-134	4.95E+03	Cm-244	4.13E+01

NOTE: Data are from Reference 172 with the exception of Co-58 and Co-60 which were obtained from the BWR default source term values from Table 1.4.3.2-3 of Reference 166.

01511192

Table 14.7-24c Core Inventory for GE14 Fuel at 37 GWD/MT Exposure @ T = 0 Hours in Ci/MWt (Reference 173)

Nuclide	Activity	Nuclide	Activity	Nuclide	Activity
Co-58	1.38E+02	Ru-103	4.08E+04	Cs-136	1.52E+03
Co-60	1.33E+02	Ru-105	2.70E+04	Cs-137	4.99E+03
Kr-85	4.96E+02	Ru-106	1.50E+04	Ba-139	4.94E+04
Kr-85m	7.33E+03	Rh-105	2.54E+04	Ba-140	4.79E+04
Kr-87	1.45E+04	Sb-127	2.35E+03	La-140	4.99E+04
Kr-88	1.95E+04	Sb-129	7.30E+03	La-141	4.48E+04
Rb-86	4.51E+01	Te-127	2.32E+03	La-142	4.34E+04
Sr-89	2.70E+04	Te-127m	3.96E+02	Ce-141	4.53E+04
Sr-90	3.98E+03	Te-129	6.83E+03	Ce-143	4.24E+04
Sr-91	3.40E+04	Te-129m	1.32E+03	Ce-144	3.95E+04
Sr-92	3.62E+04	Te-131m	5.05E+03	Pr-143	4.14E+04
Y-90	4.10E+03	Te-132	3.81E+04	Nd-147	1.80E+04
Y-91	3.51E+04	I-131	2.67E+04	Np-239	4.56E+05
Y-92	3.66E+04	I-132	3.90E+04	Pu-238	8.43E+01
Y-93	4.10E+04	I-133	5.53E+04	Pu-239	1.15E+01
Zr-95	4.65E+04	I-134	6.24E+04	Pu-240	1.87E+01
Zr-97	4.62E+04	I-135	5.26E+04	Pu-241	4.08E+03
Nb-95	4.68E+04	Xe-133	5.42E+04	Am-241	6.16E+00
Mo-99	5.03E+04	Xe-135	2.44E+04	Cm-242	1.31E+03
Tc-99m	4.45E+04	Cs-134	4.95E+03	Cm-244	4.13E+01

NOTE: Data are from Reference 173 with the exception of Co-58 and Co-60 which were obtained from the BWR default source term values from Table 1.4.3.2-3 of Reference 166.

01511192

14.8 Anticipated Transients Without Scram (ATWS)

14.8.1 General

ATWS was not considered in the original design or licensing basis of the Monticello plant and was not addressed in the Final Safety Analysis Report (FSAR).

Anticipated Transients Without Scram (ATWS) events were first identified by the Atomic Energy Commission as a safety issue shortly before a Provisional Operating License was issued to Monticello. In 1969, a consultant for the Advisory Committee on Reactor Safeguards (ACRS) pointed out that a common mode failure in the reactor protection system could prevent an automatic scram of the reactor following a plant transient.

In 1973, the AEC staff published WASH-1270 (Reference 101), a technical report on ATWS for water cooled power reactors, which established their position on ATWS. Subsequently, the NSSS vendors developed methods for analyzing ATWS events.

At the Monticello Atomic Safety and Licensing Board (ASLB) Full Term Operating License hearings in May, 1975, information related to ATWS issues was presented. In an effort to close the ATWS issue and obtain a Full Term Operating License, Northern States Power Company agreed to install a Recirculation Pump Trip (RPT) System and an Alternate Rod Injection (ARI) System. The NRC reviewed and approved the proposed ATWS modifications in a letter and safety evaluation dated February 23, 1977 (Reference 102).

14.8.1.1 Final ATWS Rule

For the industry as a whole, the concerns related to ATWS required approximately 15 years to reach final resolution. The ATWS issue was resolved with a Rule issued by the Nuclear Regulatory Commission in 1984. The Final ATWS Rule, 10CFR50.62, was prescriptive in nature. The Rule directed that a number of modifications be made based on reactor type. Completion of these modifications was deemed by the Commission to provide the required level of plant protection for ATWS events.

For Boiling Water Reactors, the Final ATWS Rule required:

a. An Alternate Rod Injection (ARI) system, diverse from the reactor protection system, to vent the scram air header automatically under ATWS conditions.

b. A Recirculation Pump Trip (RPT) system to trip the reactor recirculation pumps automatically under ATWS conditions.

c. A Standby Liquid Control System (SLCS) with the capability of inserting negative reactivity equivalent to 86 gpm of 13 weight percent of natural sodium pentaborate decahydrate solution into a 251-inch inside diameter reactor vessel.

Clarification of design features and quality assurance requirements for these modifications was provided in additional guidance issued by the NRC staff in 1985.

Based on agreements reached with the NRC staff to resolve Full Term Operating License open items, the ARI and RPT systems at Monticello were installed prior to the Final ATWS Rule. The NRC adopted a different position concerning ARI diversity requirements with the Final ATWS Rule, however, which the Monticello installation did not fully meet. The NRC later concluded that further modifications were not required at Monticello due to backfit considerations (References 68, 69, and 70).

The capacity of the SLCS at Monticello was upgraded by increasing the concentration of Boron-10 in the SLCS tank in accordance with the Final ATWS Rule. SLCS related changes implemented at Monticello were reviewed and approved by the NRC (References 117 and 118).

Satisfaction of the Final ATWS Rule was confirmed by the NRC staff and the Monticello Technical Specifications were amended to include limiting conditions for operation and surveillance requirements for the required ATWS mitigation features.

Refer to Section 7.6.2 for a description of the RPT and ARI system. Refer to Section 6.6.1 for a description of SLCS compliance with the Final ATWS Rule.

14.8.1.2 Programmatic Issues

In 1983, both scram breakers failed to automatically open at Unit 1 of the Salem Nuclear Power Plant when an automatic reactor trip signal was received. This was considered to be an actual ATWS event.

A detailed NRC investigation of this event resulted in the issue of NRC Generic Letter 83-28 (Reference 103). This letter required licensees to make a number of programmatic improvements in reactor protection system reliability and general management. Improvements were specified in the following areas.

a. Post-Trip Review

b. Equipment Classification and Vendor Interface

c. Post-Maintenance Testing

d. Reactor Trip System Reliability Improvements

A number of improvements to satisfy the requirements of the General Letter were made at Monticello and found acceptable by the NRC staff.

14.8.2 Evaluation of Events

01511192

MNGP meets the ATWS requirements defined in 10 CFR 50.62 because:

- An Alternate Rod Injection (ARI) system is installed.
- Standby Liquid Control (SLC) system's automatic boron injection capability is equivalent to the control provided by 86 gpm of 13 wt% sodium pentaborate decahydrate solution.

- Reactor recirculation pump control logic automatically trips pumps (RPT) under conditions indicative of an ATWS event.

In addition, ATWS event analyses were performed to validate compliance with the ATWS acceptance criteria below. Three ATWS analyses were performed: ATWS licensing basis analysis, ATWS with depressurization analysis, and ATWS with core instability (ATWSI) analysis. These analyses take credit for SLC and RPT but not ARI and ensure that the following ATWS acceptance criteria were met (References 108, 134, 160, 182, 184, 188, 199, 204, 205, 206, and 207): 01511192 01511192

Event mitigation is consistent with emergency procedure guidelines/severe accident guidelines (EPGs/SAGs)

- The potential for thermal-hydraulic instability is mitigated
- The peak vessel bottom pressure is less than the ASME Service Level C limit of 1500 psig;
- The peak clad temperature is within the 10 CFR 50.46 limit of 2200°F
- The peak suppression pool temperature is less than the design limit
- The peak containment pressure is less than the containment design pressure
- Sufficient margin is available in the setpoint for the SLC system pump discharge relief valve such that SLC system operability is not affected by a postulated ATWS event (See USAR section 6.6.1.4 for further discussion)

The emergency operating procedures (EOPs) follow EPGs for mitigation of an ATWS event. Inputs, assumptions, and mitigation sequences used in the analyses are described in References 108 and 188, for EPU and MELLLA+, respectively. The NRC approved the MNGP ATWS mitigation strategy, event analysis, and the generic disposition of peak cladding temperature (PCT) and local cladding oxidation for EPU and MELLLA+, as applicable, with issuance of License Amendments 176 (Reference 134) and 180 (Reference 184), respectively.

14.8.2.1 ATWS Licensing Basis Analysis

The limiting events required to be evaluated for the licensing basis ATWS analysis are (Reference 188 for MELLLA+):

- Main steam isolation valve closure (MSIVC)
- Pressure regulator failure open (PRFO)
- Loss of offside power (LOOP) (containment analysis only) 01511192

Using GNF methods, the reactor transient analysis of these events was performed using the approved ODYN methodology documented in Reference 190. ODYN calculates the peak vessel pressure used in non-vessel evaluations such as SBLC relief valve simmer margin (see section 6.6.1.4) and input to containment analysis. Using AREVA methods, the reactor transient analysis was performed using the COTRANSA2 methodology documented in Reference 229 for peak vessel pressure compliance with ASME service level C limits. The STEMP model was used for the suppression pool heatup analysis. STEMP is not used for NPSH analysis as the containment pressure is non-conservative. (See USAR section 5.2.3.3 for evaluation of ECCS pump NPSH during ATWS event). As described in References 206 and 207 and approved by the NRC in References 199 and 193 respectively, the containment analyses are unaffected by the introduction of AREVA fuel and the containment analyses in Reference 108 and 188 remain the analyses of record. RHR and RHRSW pumps are assumed to operate in suppression pool cooling mode for these events. A loss of offsite power (LOOP) reduces the number of pumps available and thus the RHR heat exchanger effectiveness while in this mode. 01511192 01511192

The key operator actions credited in the licensing basis ATWS analysis, which are consistent with the EOPs, include:

- Manual FW flow reduction at 90 seconds following the start of MSIV closure. The FW flow reduction from 100% to 0% rated flow occurs in 15 seconds.
- Water level control at top of active fuel (TAF) plus 5 feet due to limitations of ODYN code. (ODYN limitation and 5 foot adder only applicable for GNF analysis) 01511192
- Initiation of SLC system boron injection at 120 seconds following the high pressure ATWS RPT signal.
- Initiation of RHR suppression pool cooling at 600 seconds into the ATWS event.

The containment analysis is fuel independent per References 206 and 207. The limiting peak suppression pool temperature occurs when the event starts from 80% core flow (i.e., MELLLA+/EFW minimum flow) and results in peak suppression pool temperature of 197°F, which is below the limit of 281°F (Reference 188). The limiting peak containment pressure is also limiting from 80% core flow and results in a peak containment pressure of 13.6 psig, which is below the limit of 56.0 psig (Reference 188).

The overpressure analysis is performed each cycle. (References 206 and 207) Representative analysis was presented and subsequently approved by the NRC as part of License Amendments 188 and 191 (References 199 and 189). The limiting peak vessel pressure occurs when the event starts from 80% core flow (i.e., MELLLA+/EFW) and occurs in the vessel lower head. The representative analysis resulted in a peak pressure of 1452 psig (including various adders totaling 20 psi to account for void-quality correlations, Doppler void effects and thermal conductivity degradation), which is below the limit of 1500 psig. (Reference 207) 01511192

Coolable core geometry is assured by meeting the 2200ºF PCT and the 17% local cladding oxidation acceptance criteria of 10 CFR 50.46 (Reference 157). Previous ATWS analyses used to support generic assessments of ATWS have demonstrated that there is significant margin to the acceptance criteria of 10 CFR 50.46. The calculated PCTs for ATWS events have been consistently less than 1500ºF. If the fuel temperature remains below 1600ºF, cladding oxidation is insignificant compared to the acceptance criteria. This criteria is therefore met with no further analysis. The local fuel conditions are not changed with operation at increased power levels assumed for the current ATWS event analyses because the hot bundle operation is still constrained by the same operating thermal limits. Because the average channel power increases with EPU, the fraction of the flow passing through the hot channel increases. The increased flow keeps the peak cladding temperature and local oxidation from increasing with EPU. The peak clad temperature was not calculated during the transition to AREVA fuel because the results are bounded by the LOCA analysis, which includes a longer core uncovery phase.

01511192

Only in the ODYN MELLLA+ region analysis, which is no longer credited for peak vessel pressure, all SRVs must be in service to comply with the ASME service level C pressure limit. AREVA analysis in both the EFW and MELLLA regions demonstrates compliance with the ASME service level C pressure limit with one SRV out of service (References 206 and 207). The limitation to have all SRVs in service while operating above the MELLLA line (i.e., in the MELLLA+/EFW region) is retained in order to preserve the ODYN analysis results that were used for other evaluations.

01511192

The results of the licensing basis ODYN ATWS analysis meet the ATWS acceptance criteria. Therefore, the Monticello response to an ATWS event when initiated in any operating domain is acceptable.

14.8.2.2 ATWS With Depressurization Analysis

Monticello Emergency Operating Procedures (EOPs) require depressurization during an ATWS event when the suppression pool temperature reaches the heat capacity temperature limit (HCTL). A best estimate ATWS analysis, using TRACG04 methodology with input data from TGBLA06/PANAC11, was therefore performed as required by Reference 191 because hot shutdown was not achieved prior to reaching the HCTL based on the licensing basis ODYN calculation. The TRACG04 ATWS analysis was performed for the ATWS event initiated in the MELLLA+ operating domain with depressurization explicitly modeled (Reference 188).

TRACG04 is not the license basis calculation but was used to perform a complete assessment of possible conditions. ODYN cannot model depressurization. In the licensing basis ODYN ATWS analysis, ADS operation is inhibited and the vessel cycles on SRV setpoints until the reactor is shutdown. These limitations were factored into NRC approval for application of ODYN to ATWS.

The limiting event evaluated for the TRACG04 ATWS analysis is the MSIVC. The MSIVC and PRFO event behavior are essentially the same in the long-term as both events result in reactor isolation. Therefore, the MSIVC response is representative of both events for the long term simulation. One SRV was assumed out of service.

The key operator actions credited in the best estimate TRACG04 ATWS analysis, which are consistent with the plant specific EOPs, include:

- [redacted]
- Water level control using the designated water level control strategy. Two different water level control strategies were investigated. Reactor level was controlled at either TAF or approximately TAF minus two feet.
- Initiation of SLC system boron injection at 120 seconds following the high pressure ATWS RPT signal.
- [redacted]
- Following depressurization, operators maintain reactor vessel pressure between 20 and 50 psig by closing/re-opening ADS SRVs.
- Termination of all ECCS injection, except RCIC and SLC system, prior to depressurization.

The best-estimate TRACG04 calculations demonstrate that, depending on initial conditions, the HCTL may or may not be reached and emergency depressurization may not be required. The HCTL is a function of the reactor operating pressure and the suppression pool water level. For this reason, the best-estimate analysis was performed for bounding assumptions of HCTL of 150°F to 175°F. For the low HCTL value, depressurization is required, but not for the high level. The results of the analysis are presented in section 9.3.1.2 of Reference 182. For all cases analyzed, the ATWS acceptance criteria were satisfied. The containment analysis associated with the ATWS with depressurization is unaffected by the transition to AREVA fuel. 01511192

14.8.2.3 ATSW With Core Instability (ATWSI) Analysis

The generic core instability evaluations continue to apply for the MELLLA+/EFW operating domain (Reference 185). However, a plant-specific ATWS instability calculation was performed, as required by Reference 191, to demonstrate that Monticello Emergency Operating Procedure (EOP) actions, including boron injection and water level control strategy (flow runback to uncover the feedwater spargers), effectively mitigate an ATWS event with large power oscillations in the MELLLA+/EFW operating domain. The MNGP analysis is summarized in References 188 and 205. A detailed discussion of ATWS core instability and MELLLA+/EFW operation is included in Section 9.3.3 of Reference 182 and Reference 205. Limitations and requirements identified in the NRC review of Reference 182 are addressed in Reference 184. TRACG04 and AISHA/SINANO calculations indicate that all applicable ATWS criteria are satisfied for ATWSI. 01511192 01511192

To support the transition to AREVA fuel, a peak clad temperature analysis was performed using AREVA codes AISHA and SINANO (Reference 205). Reference 204 describes the methods used in AISHA and SINANO. As described in Reference 207 section 7.2.2, the analysis for peak suppression pool temperature and peak containment pressure remains the TRACG04 analysis. 01511192

The limiting ATWS instability event was initiated from 102% current licensed thermal power and 80% rated core flow (MELLLA+). One SRV is assumed out of service. Without operator action, the limiting event for peak suppression pool temperature and peak containment pressure is the turbine trip with bypass (TTWB). The TTWB isolates the feedwater heaters and increases core inlet subcooling. The event analysis included the use of nominal inputs. 01511192

Reference 205 describes the fuel-specific ATWS-I analysis. The AREVA PCT analysis used balance of plant conditions (e.g. initial power at natural circulation) from the TRACG04 analysis as boundary conditions (Reference 213). Peak clad temperature was analyzed for potentially limiting exposure statepoints for 3 core compositions: all GE14 fuel, a mixture of GE14 and ATRIUM 10XM fuel, and all ATRIUM 10XM fuel. Analysis assumptions did not include use of margin to the LHGR limit.

Bounding analysis for the turbine trip with bypass was performed assuming no operator intervention (un-mitigated). In this case, the core is assumed to reach limit cycle oscillations and the peak clad temperature is approximately at the coolability limit of 2200°F. Due to the low margin of the un-mitigated case, the time critical operator action to initiate feedwater flow termination within 90 seconds of event initiation was assumed (Reference 213). By crediting operator mitigation of the event, peak clad temperature was reduced to well below 2200°F and core instability is prevented. Sensitivity analysis was performed to demonstrate the effect of longer operator action times. Specific results are presented in Reference 204; in general, operator action times significantly longer than 90 seconds demonstrate large margin to 2200°F. 01511192

The key operator actions credited in the TTWB ATWS instability analysis include (Section 3.2 of Reference 188 and section 3.2.6 of reference 230:

- [redacted]
-
-
-

The TTWB ATWSI event is not limiting for PCT when the MNGP specific timing for operator actions are used. With respect to unstable power oscillations, the limiting ATWSI event for PCT becomes a two recirculation pump trip (2RPT). The 2RPT event does not challenge acceptable limits because the event involves only a flow reduction, and not the significant subcooling event induced by the turbine trip and the associated loss of extraction steam for the feedwater heaters. Even though 2RPT has traditionally not been considered an ATWS event because there is no immediate automatic scram signal that could fail, the NRC staff accepted 2RPT as the limiting ATWSI event for MNGP (Reference 184 and 224). The event assumes failure of the required manual scram and the EFWS scram. The 2RPT event also credits Operation action to initiate water level reduction at 90 seconds as assumed in the TTWB analysis. 01511192 01511192

ATWS mitigation features (i.e., prompt manual FW flow runback and early boron injection) are adequate to mitigate the ATWSI oscillations, and are still effective in the MELLLA+ domain. The calculations indicate that the ATWS acceptance criteria are satisfied even in the presence of unstable power oscillations when the MNGP specific timing for operator actions is used.

14.9 Deleted

14.10 Other Analyses

14.10.1 Adequate Core Cooling for Transients With a Single Failure

NUREG-0737, Task Item II.K.3.44 required licensees to demonstrate that the reactor core remains covered, or provide analysis to show that no significant fuel damage results from uncovering the core, for anticipated transients combined with the worst single failure, assuming proper operator actions. The General Electric BWR Owners' Group responded to this item with a generic report applicable to BWR-2 through BWR-6 plants on December 19, 1980 (Reference 53).

The BWR Owners' Group report identified a loss-of-feedwater event as the worst anticipated transient, and loss of a high pressure inventory makeup or heat removal system as the worst single failure. The analyses showed that the reactor core remains covered for the combination of these worst-case conditions, without operator action to manually initiate the emergency core cooling system or other inventory makeup systems.

Item II.K.3.44 also included transients which result in a stuck open relief valve, in combination with the worst single failure, as a situation requiring analysis. Under these conditions, the analyses in the BWR Owners' Group report showed that the reactor core remains covered with proper operator actions.

Northern States Power Company endorsed the BWR Owners' Group report in reference to the Monticello Nuclear Generating Plant in a letter to the Director of Nuclear Reactor Regulation on November 12, 1981 (Reference 54). For Extended Power Uprate (EPU), Probabilistic Risk Assessment (PRA) calculations were performed to evaluate a Loss of Feedwater Event at EPU conditions assuming a Stuck Open Relief Valve and using the RCIC System as the high-pressure injection source. The result of these evaluations demonstrated that adequate core cooling and containment integrity are maintained throughout the mitigation sequence (Reference 160).

14.11 References

1. Deleted.

2. General Electric report, NEDE-10958, “General Electric BWR Thermal Analysis Basis (GETAB): Data Correlation and Design Application”, January 1977.

3. Deleted.

4. Deleted.

5. Deleted.

6. Deleted.

7. Deleted.

8. Deleted.

9. Deleted.

10. Deleted.

11. Deleted.

12. Deleted.

13. Monticello calculation number 04-040, Revision 3, "MNGP AST - CRDA Radiological Consequence Analysis."

14. Deleted.

15. NSPM letter L-MT-09-048 (T J O'Connor) to NRC, "Monticello Extended Power Uprate: Response to NRC Containment and Ventilation Review Branch (SCVB) Request for Additional Information (RAI) dated March 19, 2009, and March 26, 2009 (TAC No. MD9990)", dated July 13, 2009

16. Monticello calculation number 04-039, Revision 0B, "MNGP AST - MSLBA Radiological Consequences."

17. General Electric report, NEDO-21231, “Banked Position Withdrawal Sequence”, C J Paone, January 1977.

18. Deleted.

19. Deleted.

20. Deleted.

01511192

01511192

21. General Electric report, NEDC-32514P, Revision 1, “Monticello SAFER/GESTR-LOCA Loss-of-Coolant Accident Analysis”, dated October 1997.

22. NRC (W J Dircks) letter to the Commissioners, SECY-83-472, “Emergency Core Coolant System Analysis Methods”, November 17, 1983.

23. General Electric report, NEDO-20566A, “General Electric Company Analytical Model for Loss-of-Coolant Analysis in Accordance with 10CFR50 Appendix K”, September 1986.

24. General Electric report, NEDC-23785-P, “The GESTR-LOCA and SAFER Models for the Evaluation of the Loss-of-Coolant Accident; Volume III”, SAFER/GESTR Application Methodology, “Revision 1”, October 1984.

25. NRC (C O Thomas) letter to General Electric (J F Quirk), “Acceptance for Referencing of Licensing Topical Report NEDE-23785, Revision 1, Volume III (P), The GESTR-LOCA and SAFER Models for the Evaluation of the Loss-of-Coolant Accident,” dated June 1, 1984.

26. General Electric report, NEDC-23785-P, “The GESTR-LOCA and SAFER Models for the Evaluation of the Loss-of-Coolant Accident; Volume II”, January 1985.

27. Deleted.

28. Deleted.

29. Deleted.

30. Deleted.

31. Deleted.

32. Deleted.

33. Deleted.

34. Deleted.

35. Deleted.

36. Deleted.

37. Deleted.

38. General Electric report, GE-NE-187-02-0392, “Monticello Nuclear Generating Plant SAFER/GESTR-LOCA Analysis Basis Documentation”, D A Hamon, July 1993.

39. Deleted.

01511192

40. NSP (L O Mayer) letter to the NRC, “Transmittal of ECCS Analysis”, dated July 9, 1975.

41. Deleted.

42. General Electric (R E Engel) letter to the NRC (D G Eisenhut), “Fuel Assembly Loading Error”, November 30, 1977.

43. NRC (D G Eisenhut) letter to General Electric (R E Engel), “Safety Evaluation of Proposed Calculational Methods”, dated May 8, 1978.

44. Deleted.

45. Deleted.

46. Deleted.

47. Deleted.

48. Deleted.

49. Deleted.

50. Deleted.

51. Deleted.

52. Deleted.

53. BWR Owners Group (D B Waters) letter to the NRC (D G Eisenhut), “BWR Owners’ Group Evaluation of NUREG-0737 Requirements”, dated December 29, 1980.

54. NSP (L O Mayer) letter to the NRC, “Endorsement of BWR Owners’ Group Report on NUREG-0737, Item II.K.3.44,” November 12, 1981.

55. Deleted.

56. Deleted.

57. Deleted.

58. Deleted.

59. Deleted.

60. Deleted.

61. Deleted.

62. General Electric report, NEDC-30492-P, “Average Power Range Monitor, Rod Block Monitor and Technical Specification Improvement (ARTS) Program for Monticello Nuclear Generating Plant”, April 1984.

63. Deleted.

64. Deleted

65. Deleted

66. General Electric report, NEDC-30515, “GE BWR Extended Load Line Limit Analysis for Monticello Nuclear Generating Plant, Cycle 11”, March 1984.

67. Deleted.

68. NRC (J J Stefano) letter to NSP (T M Parker), “Alternate Rod Injection System Instrument Diversity Requirement (TAC No. 73022)”, dated June 7, 1989.

69. NSP (T M Parker) letter to the NRC, “Alternate Rod Injection System Instrument Diversity Requirement (TAC No. 73022)”, dated August 31, 1989.

70. NRC (W O Long) letter to NSP (T M Parker), “Implementation of Alternate Rod Injection System (ARI) Diversity Requirements in 10CFR 50.62 (ATWS Rule) - Monticello Nuclear Generating Plant (TAC 73022)”, dated March 29, 1991.

71. General Electric report, NEDC-31849P, “Maximum Extended Load Line Limit Analysis for Monticello Nuclear Generating Plant Cycle 15”, June 1992.

72. NSP (T M Parker) letter to the NRC, “Submittal of Monticello Individual Plant Examination (IPE) Report”, dated February 27, 1992.

73. NSP (T M Parker) letter to the NRC, “Response to Request for Additional Information Concerning the Monticello Individual Plant Examination (IPE) Submittal - Generic Letter 88-20 (TAC No. M74435)”, dated February 15, 1993.

74. General Electric report, NEDC-31778-P, “Safety Review for Monticello Nuclear Generating Plant Increased Core Flow Operation Throughout Cycle 14”, H X Hoang, December 1989.

75. Deleted.

76. Siemens report EMF-94-055(P), “Monticello 9x9-1X Qualification Fuel Assemblies Safety Analysis Report”, July 1994.

77. NRC (B A Wetzel) letter to NSP (R O Anderson), “Staff Evaluation of the Monticello Nuclear Generating Plant Individual Plant Examination (IPE) - Internal Events Submittal”, dated May 26, 1994.

78. ANP-10262 Rev 0, "Enhanced Option III Long Term Stability Solution," May 2008.

01511192

79. EE 25987, "Calculational Framework for the Extended Flow Window Stability (EFWS) Setpoints".

80. L-MT-15-065, P. Gardner to NRC, "License Amendment Request for AREVA Extended Flow Window Supplement to Respond to NRC Staff Questions (TAC No. MF5002)," September 29, 2015. 01511192

81. General Electric report, NEDO-31960A, “BWR Owners Group Long-Term Stability Solutions Licensing Methodology”, November 1995.

82. Deleted.

83. Deleted.

84. NRC (D Crutchfield) Generic Letter 88-20, “Individual Plant Examination for Severe Accident Vulnerabilities - 10CFR50.54(f)”, dated November 23, 1988.

85. NRC (J G Partlow) Generic Letter 88-20, Supplement 4, “Individual Plant Examination of External Events (IPEEE) for Severe Accident Vulnerabilities - 10CFR50.54(f)”, dated June 28, 1991.

86. NSP (T M Parker) letter to the NRC, “Response to Generic Letter 88-20, Supplement 4, Individual Plant Examination of External Events for Severe Accident Vulnerabilities”, dated December 20, 1991.

87. NSP (W J Hill) letter to the NRC, “Supplemental Response to Generic Letter 88-20, Supplement 4, Individual Plant Examination of External Events for Severe Accident Vulnerabilities”, dated January 5, 1995.

88. NSP (W J Hill) letter to the NRC, “Submittal of Monticello Individual Plant Examination of External Events (IPEEE) Report”, dated March 1, 1995.

89. NSP (W J Hill) letter to the NRC, “Submittal of Monticello Individual Plant Examination of External Events (IPEEE) Report, Revision 1; Seismic Analysis, Revision 0 and Internal Fires Analysis, Revision 1 (TAC M83644)”, dated November 20, 1995.

90. ASME Boiler & Pressure Vessel Code, Section III, Class I, 1965 Edition.

91. NRC (R P Zimmerman) Generic Letter 94-02, “Long-Term Solutions and Upgrade of Interim Operating Recommendations for Thermal-Hydraulic Instabilities in Boiling Water Reactors”, dated July 11, 1994.

92. NRC (C E Rossi) Bulletin 88-07, “Power Oscillations in Boiling Water Reactors (BWRs)”, dated June 15, 1988.

93. OG 02-0119-260, "Backup Stability Protection (BSP) for Inoperable Option III Solution, July 17, 2002". 01511192

94. L-MT-14-044, K. Fili to NRC, "License Amendment Request for AREVA Extended Flow Window," October 3, 2014.

95. 13-077 Rev 0, "Core Flow Mapping for Enhanced Option III Long Term Stability Solution".

96. 14-049 Rev 0, "Instrument Setpoint Calculation, Average Power Range Monitor NUMAC PRNM Setpoints - Extended Flow Window Stability".

97. 16-008 Rev 0, "OPRM Settings Summary".

98. 0000-0094-9890-R0, "Monticello Option III Settings Report," 01/05/2009.

99. American National Standards Institute ANSI/ANS 5.1 - 1979, “Decay Heat in Light Water Reactors”.

100. American Nuclear Standards Proposed Standard, ANS 5.1, “Decay Energy Release Rates Following Shutdown for Uranium-Fueled Thermal Reactors (Proposed)”, October 1971.

101. WASH-1270, “Technical Report on Anticipated Transients Without Scram for Water Cooled Power Reactors”, September 1973.

102. NRC (K R Goller) letter to NSP (L O Mayer), “Safety Evaluation of Proposed Installation of RPT as a Short Term ATWS Solution”, dated February 23, 1977.

103. NRC (D G Eisenhut) Generic Letter 83-28, “Required Actions Based on Generic Implications of Salem ATWS Events”, dated July 8, 1983.

104. NRC Regulatory Guide 1.3, “Assumptions Used For Evaluating the Potential Radiological Consequences of a Loss of Coolant Accident for Boiling Water Reactors”, Revision 2, June 1974.

105. Deleted.

106. Global Nuclear Fuels - Americas Report, NEDE-24011-P-A-20, “General Electric Standard Application For Reactor Fuel”, Revision 20, December 2013 and U.S. Supplement, NEDE-24011-P-A-20-US, December 2013.

107. General Electric report, NEDE-31152-P, “General Electric Bundle Designs”, Revision 6, April 1997.

108. Monticello calculation number 11-183, Revision 0, "Task Report T0902 - Anticipated Transients Without Scram."

109. NRC (C F Lyon) letter to NSP (R O Anderson), “Request for Deviation from Emergency Procedure Guidelines, Revision 4, NEDO-31331, March 1987 (TAC No. MA0168)”, dated December 10, 1998.

110. General Electric report NEDC-31858P “BWROG Report for Increasing MSIV Leakage Rate Limits and Elimination of Leakage Control Systems”, Revision 2, September 1993.

01511192

111. NSP (W J Hill) letter to the NRC, “Supplement to License Amendment Request Titled - Revised Core Spray Pump Flow and Other Editorial Corrections”, dated August 25, 1994.

112. Deleted.

113. Deleted.

114. Deleted.

115. NRC (T Kim) letter to NSP (R O Anderson, “Issuance of Amendment Re: Main Steam Isolation Valve and 10 CFR Part 50, Appendix J, Leak Test Requirement (TAC No. M93332)”, dated April 3, 1996.

116. Deleted.

117. NRC (D C Dilanni) letter to NSP (D M Musolf), Amendment No. 56 to Facility Operating License No. DPR-22: Standby Liquid Control, dated December 11, 1987.

118. NRC (J J Stefano) letter to NSP (D M Musolf), “Amendment No. 57 to Facility Operating License No. DPR-22: Increased Sodium Pentaborate Boron-10 Enrichment”, dated September 23, 1988.

119. NRC (C F Lyon) letter to NSP (M F Hammer), “Review of Monticello Individual Plant Examination of External Events (IPEEE) Submittal (TAC No. M83644)”, dated April 14, 2000.

120. NRC (V L Rooney) letter to NSP (D M Musolf), “Amendment No. 29 to Facility Operating License No. DPR-22”, dated November 16, 1984.

121. General Electric (P T Tran) letter to NSP (S J Hammer), “Revised Mass and Energy Release Rates for Power Rerate HELB Analysis (Task 27)”, GLN-96-086, dated December 10, 1996.

122. GE Hitachi Nuclear Energy Report NEDC-32868P, Revision 5, “GE14 Compliance With Amendment 22 of NEDE-24011-P-A (GESTAR II),” May 2013.

123. GE14 Fuel Design Cycle-Independent Analysis for Monticello Nuclear Generating Plant, GE-NE-0000-0013-9576P, GE Nuclear Energy (Proprietary), March 2003

124. Deleted.

125. Current Cycle Monticello Nuclear Generating Plant Core Operating Limits Report.

126. Deleted.

127. General Electric Report NEDO-33091-A, “Improved BPWS Control Rod Insertion Process”, J. Tuttle, July, 2004.

128. Deleted.

01511192

129. NRC Regulatory Guide 1.183, “Alternative Radiological Source Terms For Evaluating Design Basis Accidents at Nuclear Power Reactors”, July 2000.

130. NSPM letter L-MT-08-052 (T J O'Connor) to NRC, " License Amendment Request: Extended Power Uprate (TAC MD9990)", dated November 5, 2008.

131. NSPM letter L-MT-09-002 (T J O'Connor) to NRC, "Response to NRC Probabilistic Risk Assessment (PRA) Branch Requests For Additional Information (RAIs) dated December 5, 2008 (TAC No. MD9990) ", dated February 9, 2009.

132. NSPM letter L-MT-09-029 (T J O'Connor) NRC, "Monticello Extended Power Uprate: Response to NRC Probabilistic Risk Assessment (PRA) Licensing Branch Requests For Additional Information (RAI) dated April 29, 2009 (TAC No. MD9990)", dated May 29, 2009.

133. NSPM letter L-MT-12-114 (M A Schimmel) to NRC, "Monticello Extended Power Uprate (EPU): Supplement for Gap Analysis Updates (TAC MD9990)", dated January 21, 2013.

134. Letter from NRC (T A Beltz) to NSPM (K D Fili), "Monticello Nuclear Generating Plant - Issuance of Amendment No. 176 to Renewed Facility Operating License Regarding Extended Power Uprate (TAC No. MD9990)", dated December 9, 2013.

135. NSP Letter L-MT-16-071 from P. Gardner (MNGP) to USNRC "2016 Annual Report of Changes in Emergency Core Cooling System Evaluation Models Pursuant to 10 CFR 50.46," dated December 19, 2016. 01511192

136. NRC (P S Tam) letter to NMC (J T Conway), “Monticello Nuclear Generating Plant - Issuance Of Amendment Re: Full-Scope Implementation Of The Alternative Source Term Methodology (TAC NO MC8971)”, dated December 7, 2006.

137. NRC (P S Tam) letter to NMC (J T Conway), “Monticello Nuclear Generating Plant (MNGP) - Correction Of Safety Evaluation Associated With Alternative Source Term Amendment (TAC NO MC8971)”, dated April 17, 2007.

138. NMC (J T Conway) letter to the NRC, “License Amendment Request - Full Scope Application of an Alternative Source Term,” dated September 15, 2005.

139. NMC (J T Conway) letter to the NRC, “Full Scope Alternate Source Term - Supplemental Information”, dated April 13, 2006.

140. NMC (J T Conway) letter to the NRC, “Response to Request for Additional Information Related to License Amendment Request for Full Scope Alternative Source Term”, dated August 22, 2006.

141. NRC Regulatory Guide 1.194, “Atmospheric Relative Concentrations For Control Room Radiological Habitability Assessments At Nuclear Power Plants”, June 2003.

142. NRC Regulatory Guide 1.145, “Atmospheric Dispersion Models For Potential Accident Consequence Assessments At Nuclear Power Plants”, November 1982.

143. General Electric Report, GE-NE-000-0052-3313-P-RO, “Monticello Nuclear Generating Plant SAFER/GESTR ECCS-LOCA Analysis - LPCI Loop Selective Detachable Break Area.” dated September 2006.

144. NMC (J T Conway) letter to the NRC, “ License Amendment Request: Revision to the allowable Value and Channel Calibration Surveillance interval for the Recirculation Riser Pressure - High Function,” dated September 25, 2007.

145. NRC (P S Tam) letter to NSP-M (T J O’Connor) “Monticello Nuclear Generating Plant - Issuance of Amendment regarding Recirculation Riser Differential Pressure (TAC NO MD6864),” dated April 7, 2009.

146. NEDO-32465-A, ”BWR Owners’ Group Long-Term Stability Detect and Suppress Solutions Licensing Basis Methodology and Reload Applications”, March 1996.

147. OG 02-0119-260, ”Backup Stability Protection (BSP) for Inoperable Option III Solution”, July 17, 2002.

148. NMC (T O’Connor) letter to NRC, “License Amendment Request: Power Range Neutron Monitoring System Upgrade”, dated February 6, 2008.

149. NRC (P Tam) letter to NSPM, “Issuance of Amendment Regarding the Power Range Neutron Monitoring System (TAC NO. MD8064)”, dated January 30, 2009.

150. GE Report, NEDO-32084P-A, Rev 2, July 2002, “TASC-03A-A Computer Program for Transient Analysis of a Single Channel”.

151. NMC (J T Conway) letter to the NRC, “License Amendment Request: Revision to Required Actions for Specification 3.5.1 Emergency Core Cooling System,” dated June 26, 2008.

152. NRC (K D Feintuch) letter to NSPM (T J O’Connor) “Monticello Nuclear Generating Plant - Issuance of Amendment Regarding Completion Time to Restore a Low-Pressure Emergency Core Cooling Subsystem to Operable Status (TAC NO MD9170),” dated July 10, 2009.

153. Monticello calculation number 04-038, Revision 3, "MNGP AST-LOCA Radiological Consequence Analysis".

154. Monticello calculation number 08-027, Revision 2, "MNGP EPU-CR and TSC Direct Dose".

155. GE Hitachi EPU Project Task Report GE-NE-0000-0060-9229-TR-R3, "Task T0400: Containment System Response", February 2011 (Monticello calculation number 11-173).

156. NSPM letter L-MT-09-025 (T J O'Connor) to NRC, "Monticello Extended Power Uprate: Response to NRC Reactor Systems Branch and Nuclear Performance & Code Review Branch Requests for Additional Information (RAI) dated February 23, 2009 (TAC No. MD9990)", dated April 22, 2009.

01511192

157. GE Hitachi EPU Project Task Report GE-NE-0000-0060-9286-TR-R2, Revision 2, "Task T0407: ECCS-LOCA SAFER/GESTR", October 2011 (Located in Monticello calculation number 11-180).

158. GE Report GE-NE-0000-0060-9285-Rev 5, "ECCS/LOCA Analysis Input Parameters (Form OPL-4/5)", May 20, 2012 (Located in EC 20651).

159. NSPM letter L-MT-09-049 (T J O'Connor) to NRC, "Monticello Extended Power Uprate: Response to NRC Reactor Systems Review Branch and Nuclear Code and Performance Review Branch Request for Additional Information (RAI) dated March 23, 2009 and Nuclear Code and Performance Review Branch Request for Additional Information dated April 27, 2009 (TAC No. MD9990)", dated July 23, 2009.

160. GE Hitachi Report NEDC-33322-P, Revision 3, "Safety Analysis Report for Monticello Constant Pressure Power Uprate", October 2008.

161. NSPM letter L-MT-09-017 (T J O'Connor) to NRC, "Monticello Extended Power Uprate: Response to NRC Reactor Systems Branch and Nuclear Performance & Code Review Branch Request for Additional Information (RAI) dated January 16, 2009 (TAC No. MD9990)", dated March 19, 2009.

162. NSPM letter L-MT-12-082 (M A Schimmel) to NRC, "Monticello Extended Power Uprate and Maximum Extended Load Line Limit Analysis Plus License Amendment Requests: Supplement to Address SECY 11-0014 Use of Containment Accident Pressure (TAC Nos. MD9990 and ME3145)", dated September 28, 2012.

163. GE Hitachi EPU Project Task Report GE-NE-0000-0064-6767-TR-R0, Revision 0, "Task T0802: Core Source Term", July 2007 (Monticello calculation number 11-245).

164. GE Hitachi Report 0000-0152-0735-R0, "Monticello Long Term Cooling", September 18, 2012.

165. NSPM Letter L-MT-13-053 (M A Schimmel) to NRC, "Monticello Extended Power Uprate and Maximum Extended Load Line Limit Analysis Plus License Amendment Requests: Supplement for Analytical Methods Used to Address Thermal Conductivity Degradation and Analytical Methods Limitations (TAC Nos. MD9990 and ME3145)", dated July 8, 2013.

166. NUREG/CR6604, "RADTRAD: A Simplified Model for RADionuclide Transport and Removal And Dose Estimation", April 1998, Supplement 1, June 8, 1999, and Supplement 2, October 2002.

167. NMC EPU Project Task Report T0901, Revision 1, "Task T0901 - Accident Radiological Analysis", February 2008 (located in EC11473).

168. GE Letter GLN-95-032 (P T Tran) to NSP (S J Hammer), "Emergency Core Cooling Parameters for use in SAFER/GESTR Power Rerate Analysis – Task 7.5", dated September 12, 1995.

169. NRC (P S Tam) letter to NSPM (T J O'Connor), "Monticello Nuclear Generating Plant - Issuance of Amendment RE: Minimum Core Spray Pump Flow Rate (TAC No. ME5441)", dated January 11, 2012 (Amendment No. 167).

170. NRC (T J Kim) letter to NSP (R O Anderson), "Monticello Nuclear Generating Plant - Issuance of Amendment RE: Revised Core Spray Pump Flow (TAC No. M85838)", dated July 12, 1995 (Amendment No. 93).

171. Monticello calculation number 96-085, "Structural Integrity of Core Spray Line Inside the Reactor".

172. 13-059 Rev 0, "MNGP EPU - Core inventory with AREVA Atrium 10-XM Fuel".

173. 16-090 Rev 0, "MNGP EPU - Core Inventory with GE14 Fuel with 37 GWD/MTU Exposure". 01511192

174. Deleted.

175. Monticello calculation number 04-041, Revision 3, "MNGP AST - FHA Radiological Consequence Analysis".

176. Monticello calculation number 12-040, Revision 0, "Containment Accident Pressure Assessment of ECCS Pump NPSHa Requirements for Extended Power Uprate (EPU)".

177. Monticello calculation number 04-036, Revision 1, "MNGP AST - Offsite Post-Accident Dispersal Analysis".

178. Monticello calculation number 04-037, Revision 3, "MNGP AST - CR/TSC Post-Accident Atmospheric Dispersal Analysis".

179. Monticello calculation number 03-036, Revision 2, "Instrument Setpoint Calculation Reactor Low Pressure Permissive Bypass Timer".

180. Monticello calculation number 95-021, Revision 3A, "Instrument Setpoint Calculation RHR APR Interlock, PS-10-105A, B, C, D".

181. Deleted. 01511192

182. GE Hitachi Nuclear Energy Report NEDC-33435P, "Safety Analysis Report for Monticello Maximum Extended Load Line Limit Analysis Plus," Revision 1, December 2009.

183. Deleted. 01511192

184. Letter from NRC (T A Beltz) to NSPM (K D Fili), "Monticello Nuclear Generating Plant - Issuance of Amendment No. 180 to Renewed Facility Operating License Regarding Maximum Extended Load Line Limit Analysis Plus (TAC No. ME3145)," dated March 28, 2014 (ADAMS Accession No. ML13317A866).

185. GE Nuclear Energy Report NEDC-33006P-A, “General Electric Boiling Water Reactor Maximum Extended Load Line Limit Analysis Plus,” Revision 3, dated June 2009 (ADAMS Accession No. ML091800530)

186. Deleted

187. Deleted. 01511192

188. Monticello calculation 11-343, Rev. 0, "Task T0902 M+ Anticipated Transients Without Scram."

189. Letter from NRC (R. Kuntz) to NSPM (P. Gardner), "Monticello Nuclear Generating Plant- Issuance of Amendment RE: Extended Flow Window (CAC NO. MF5002)," February 23, 2017. 01511192

190. GE Nuclear Energy Report NEDC3242P-A, "Generic Guidelines for General Electric Boiling Water Reactor Extended Power Uprate," February 1999.

191. Letter from NRC (H K Hieh) to General Electric (R E Brown), "Final Safety Evaluation for GE-Hitachi Nuclear Energy Americas, LLC (GHNE) Topical Report (TR) NEDC-3006P, "Maximum Extended Load Line Limit Analysis Plus" (TAC No. MB6157)," September 17, 2007.

192. GE Hitachi MELLLA+ Project Task Report 0000-0096-6889-TR-R1, Revision 1, "Task T0407: ECCS-LOCA SAFER/GESTR", October 2011 (located in Monticello calculation number 11-180).

193. Monticello calculation 13-055, Rev. 1, "Core Spray and LPCI Flow Delivery to Reactor Vessel for Safety Analysis."

194. ANP-3119 Rev 1, "Mechanical Design Report for Monticello ATRIUM™ 10XM Fuel Assemblies," October 2016.

195. ANF-89-98 Rev 1 and Supplement 1, "Generic Mechanical Design Criteria for BWR Fuel Designs," May 1995.

196. ANP-3519 Rev 0, "Fuel Rod Thermal-Mechanical Design for Monticello ATRIUM™ 10XM Fuel Assemblies, Cycle 29," November 2016 .

197. EMF-93-177 Rev 1, "Mechanical Design for BWR Fuel Channels, Framatome ANP Inc.," August 2005. 01511192

198. ANP-3092P Rev 1, "Monticello Thermal-Hydraulic Design Report for ATRIUM™ 10-XM Fuel Assemblies," June 2016.

199. T. Beltz to P. Gardner, Monticello Nuclear Generating Plant - Issuance of Amendment to Transition to Areva Atrium 10XM Fuel and Areva Safety Analysis Methods (TAC No. MF2479) (Am 188)"," June 5, 2015.

200. EMF-2245 Rev 0, "Application of Siemens Power Corporation's Critical Power Correlations to Co-Resident Fuel," August 2000.

201. ANP-2637, Revision 6, "Boiling Water Reactor Licensing Methodology Compendium", October 2014.

202. ANP-3224 Rev 2, "Applicability of AREVA NP BWR Methods to Monticello," June 2013.

203. ANP-3135 Rev 0, "Applicability of AREVA BWR Methods to Extended Flow Window for Monticello," April 2014.

204. ANP-3274 Rev 3, "Analytical Methods for Monticello ATWS-I," January 2017. (Monticello calculation number 16-016)

205. ANP-3284 Rev 2, "Results of Analysis and Benchmarking of Methods for Monticello ATWS-I," January 2017. (Monticello calculation number 16-017)

206. ANP-3213 Rev 1, "Monticello Fuel Transition Cycle 28 Reload Licensing Analysis (EPU/MELLLA)," June 2013. (Monticello calculation number 16-015)

207. ANP-3295 Rev 3, "Monticello Licensing Analysis for EFW (EPU/MELLLA+)," February 2016. (Monticello calculation number 16-018)

208. ANP-3557 Rev 0, "Monticello EPU LOCA Break Spectrum Analysis for ATRIUM™ 10-XM Fuel with Revised ECCS Parameters," January 2017. (Monticello calculation number 16-014)

209. 13-079 Rev 0, "Enhanced Option III – APRM BSP Flow Bias Scram and Rod Block Setpoint Analysis".

210. 13-059 Rev 0, "MNGP EPU - Core inventory with AREVA Atrium 10-XM Fuel".

211. 14-093 Rev 0, "Disposition of Fuel Seismic Loads at Monticello".

212. 51-9187384-000, "Monticello Plant RPV Seismic Assessment with ATRIUM™ 10XM Fuel".

213. NSPM letter L-MT-15-081, P Gardner to US NRC, "License Amendment Request for AREVA Extended Flow Window Supplement to Provide Revised Analysis of Anticipated Transient Without Scram Instability (TAC No. MF5002)", December 8, 2016

214. ANP-10298P-A Revision 1, “ACE/ATRIUM 10XM Critical Power Correlation,” March 2014

215. EMF-2209(P)(A) Revision 3, “SPCB Critical Power Correlation,” September 2009

216. NEDC-32851P-A Revision 4, "GEXL14 Correlation for GE14 Fuel," Global Nuclear Fuel, September 2007.

217. ANP-10307P-A Revision 0, “AREVA MCPR Safety Limit Methodology for Boiling Water Reactors,” June 2011

01511192

218. EMF-2361(P)(A) Revision 0, EXEM BWR-2000 ECCS Evaluation Model, Framatome ANP, May 2001.

219. XN-NF-81-58(P)(A) Revision 2 and Supplements 1 and 2, RODEX2 Fuel Rod Thermal - Mechanical Response Evaluation Model, Exxon Nuclear Company, March 1984.

220. Letter from NRC to P. A. Gardner (Xcel Energy), "Monticello Nuclear Generating Plant - Issuance of Amendment to Transition to AREVA ATRIUM 10XM Fuel and AREVA Safety Analysis Methods (TAC NO. MF2479)", June 5, 2015 (Assession Number ML15072A141)

221. BAW-10247PA Revision 0, Realistic Thermal-Mechanical Fuel Rod Methodology for Boiling Water Reactors, AREVA NP, February 2008.

222. XN-CC-33(A) Revision 1, HUXY: A Generalized Multirod Heatup Code with 10 CFR 50 Appendix K Heatup Option Users Manual, Exxon Nuclear Company, November 1975.

223. XN-NF-80-19(P)(A) Volumes 2, 2A, 2B, and 2C, Exxon Nuclear Methodology for Boiling Water Reactors: EXEM BWR ECCS Evaluation Model, Exxon Nuclear Company, September 1982.

224. EMF-2292(P)(A) Revision 0, ATRIUM™-10: Appendix K Spray Heat Transfer Coefficients, Siemens Power Corporation, September 2000.

225. ANP-3474 Revision 0, "Monticello Cycle 29 Plant Parameters Document," August 2016

226. ANP-3558 Revision 0, "Monticello LOCA MAPLHGR Limits for EPU/EFW with ATRIUM 10XM Fuel and Revised ECCS Parameters," January 2017.

227. XN-NF-80-19(P)(A) Volume 1 Supplements 1 &2, Exxon Nuclear Methodology for Boiling Water Reactors: Neutronic Methods for Design and Analysis, Exxon Nuclear Company, March 1983.

228. Monticello calculation 05-030, Rev. 2, "Determination of SRV Self Actuation Setpoint to be Used in Reactor Vessel Overpressure Analysis."

229. ANF-913(P)(A) Volume 1 Revision 1 and Volume 1 Supplements 2, 3 and 4, "COTRANSA2: A Computer Program for Boiling Water Reactor Transient Analyses," Advanced Nuclear Fuels Corporation, August 1990.

230. R. Kuntz to P Gardner, "Monticello Nuclear Generating Plant- Issuance of Amendment RE: Extended Flow Window (CAC NO. MF5002)."

231. FS1-0032297, Revision 1.0, "Monticello 10 CFR 50.46 PCT Reporting for ATRIUM 10XM Through May 2017," AREVA NP, May 2017.

FIGURES

604000000100

Figure 14.7-1 Deleted

Figure 14.7-1a Deleted

604000000100

Figure 14.7-1b Deleted

604000000100

Figure 14.7-2 Deleted

604000000100

Figure 14.7-3 Deleted

604000000100

Figure 14.7-4 Deleted

604000000100

Figure 14.7-5 Deleted

604000000100

Figure 14.7-6 Deleted

Figure 14.7-7 Regional Nodalization for SAFER

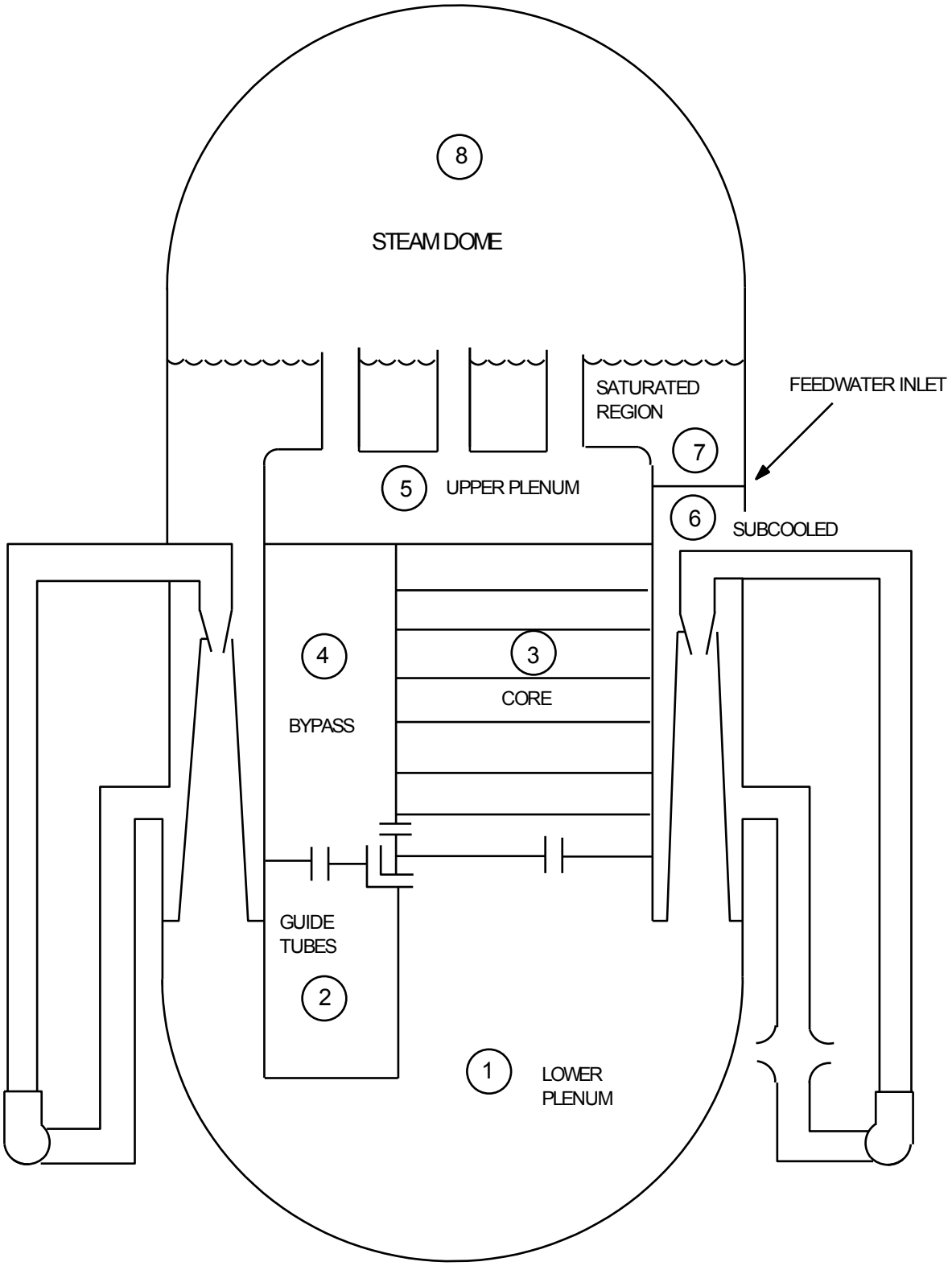

Figure 14.7-8 CS Flow Delivery Assumed for SAFER

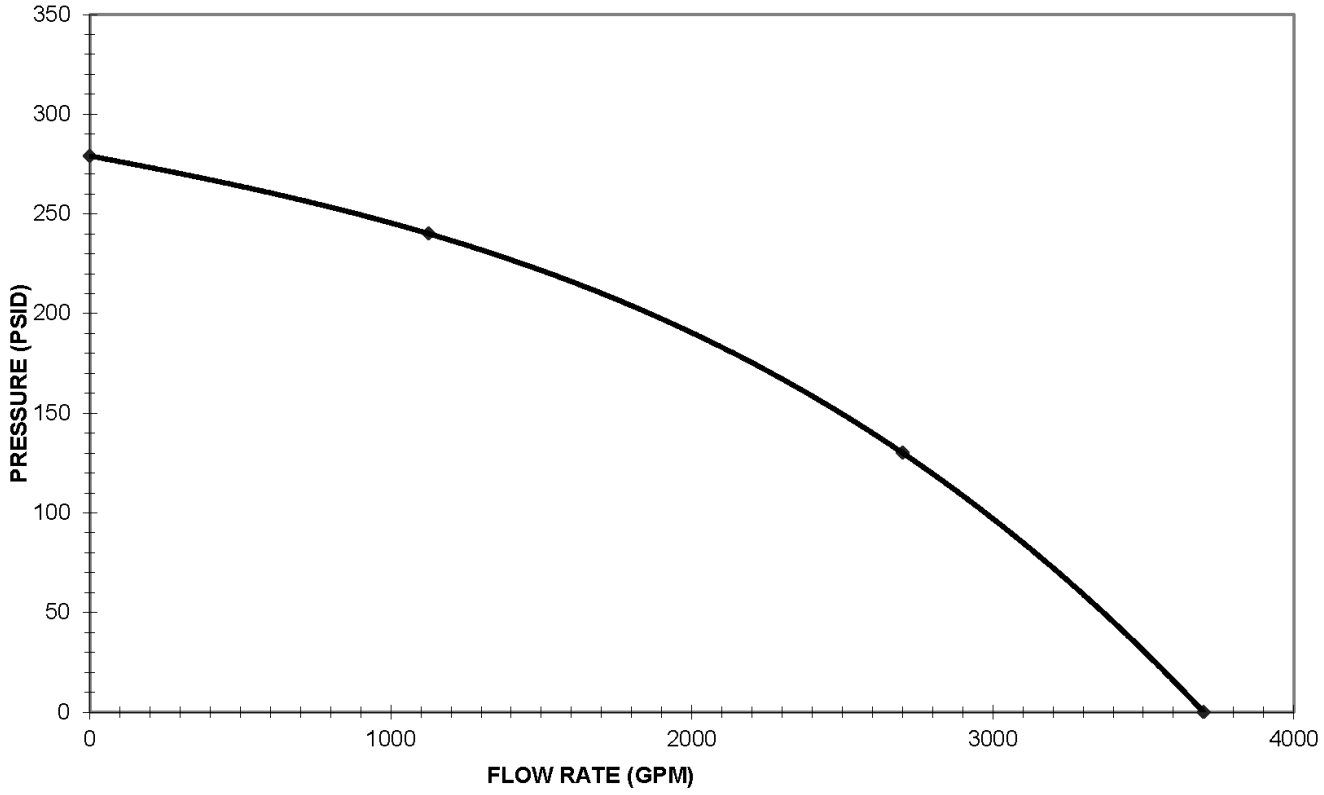

Figure 14.7-9 LPCI Flow Delivery Assumed for SAFER

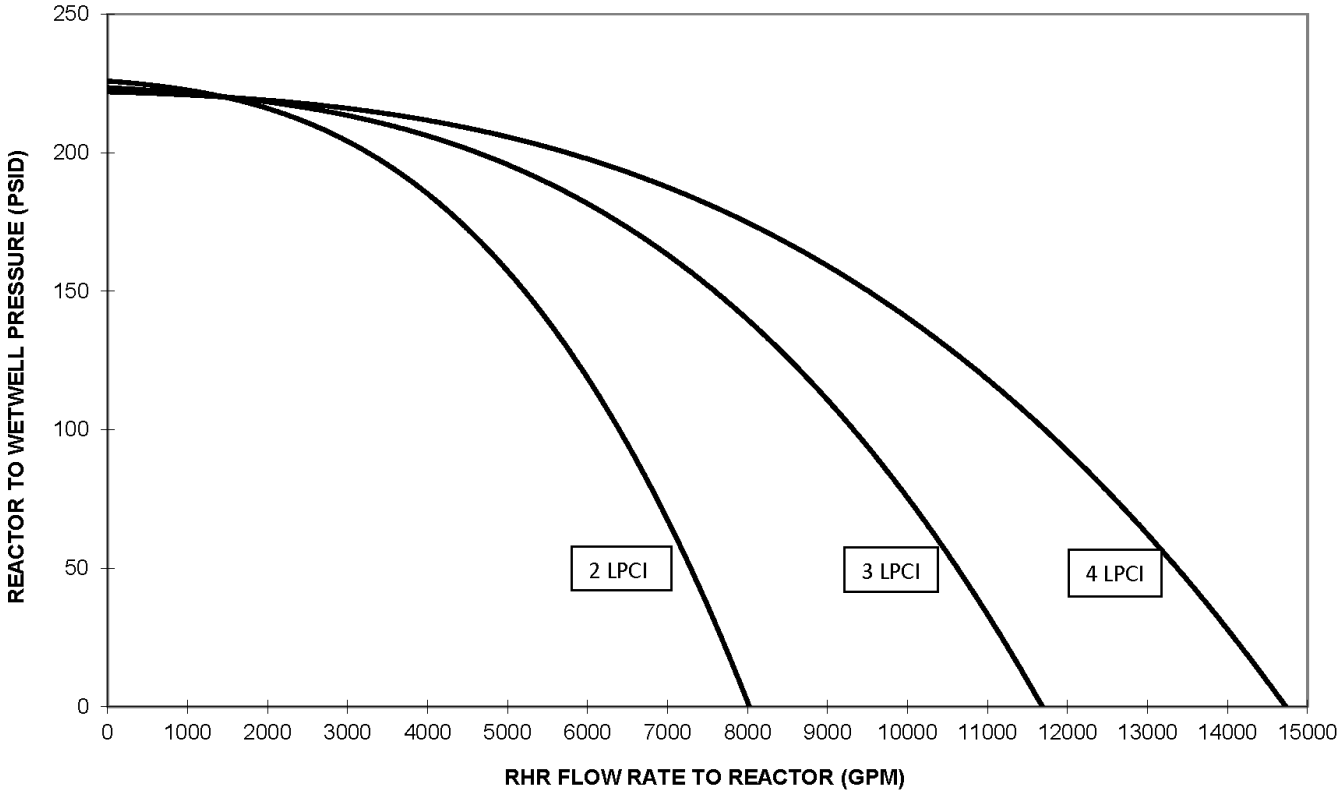

Figure 14.7-10 ADS Actuation Logic

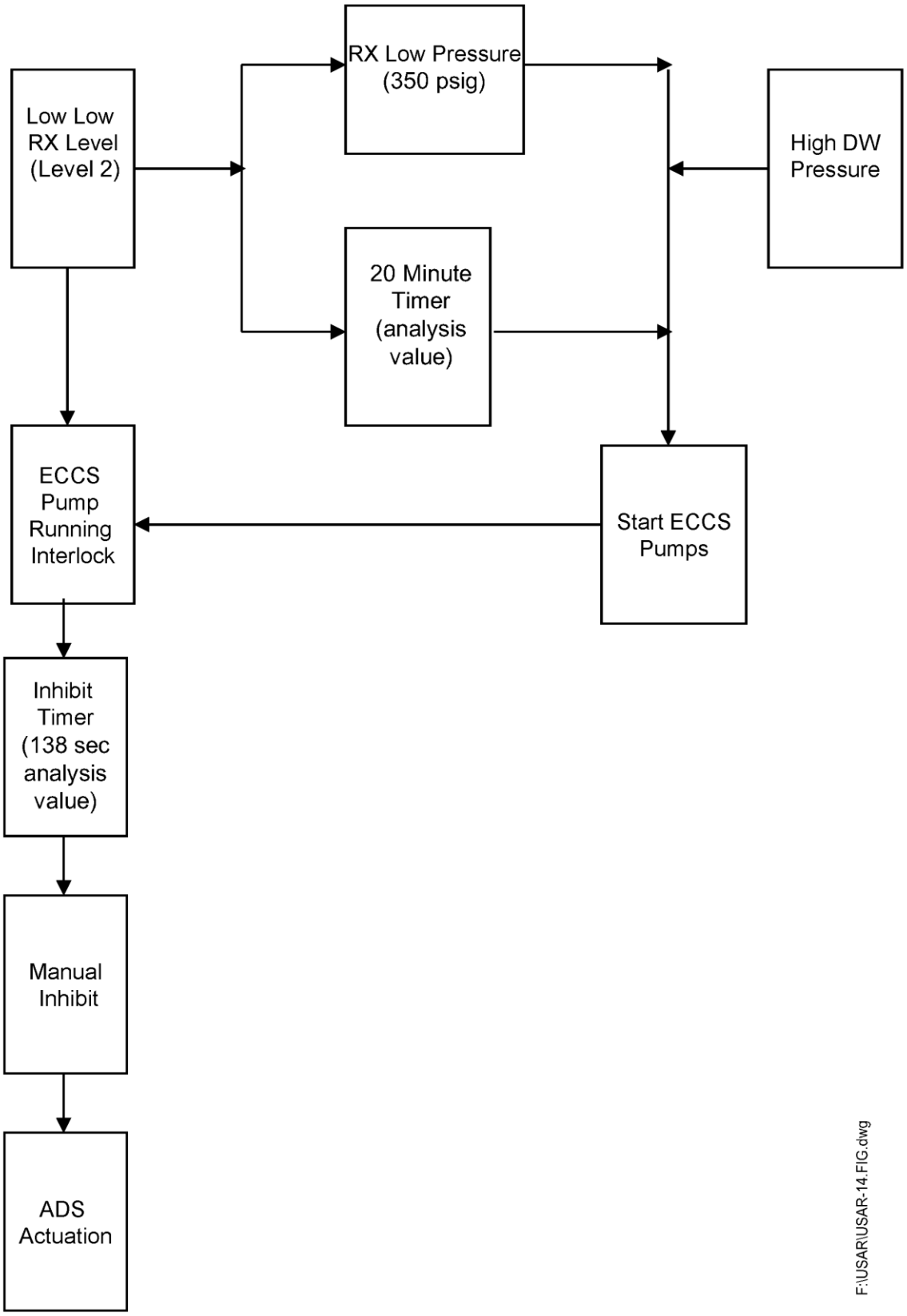

Figure 14.7-11 CS Initiation Logic

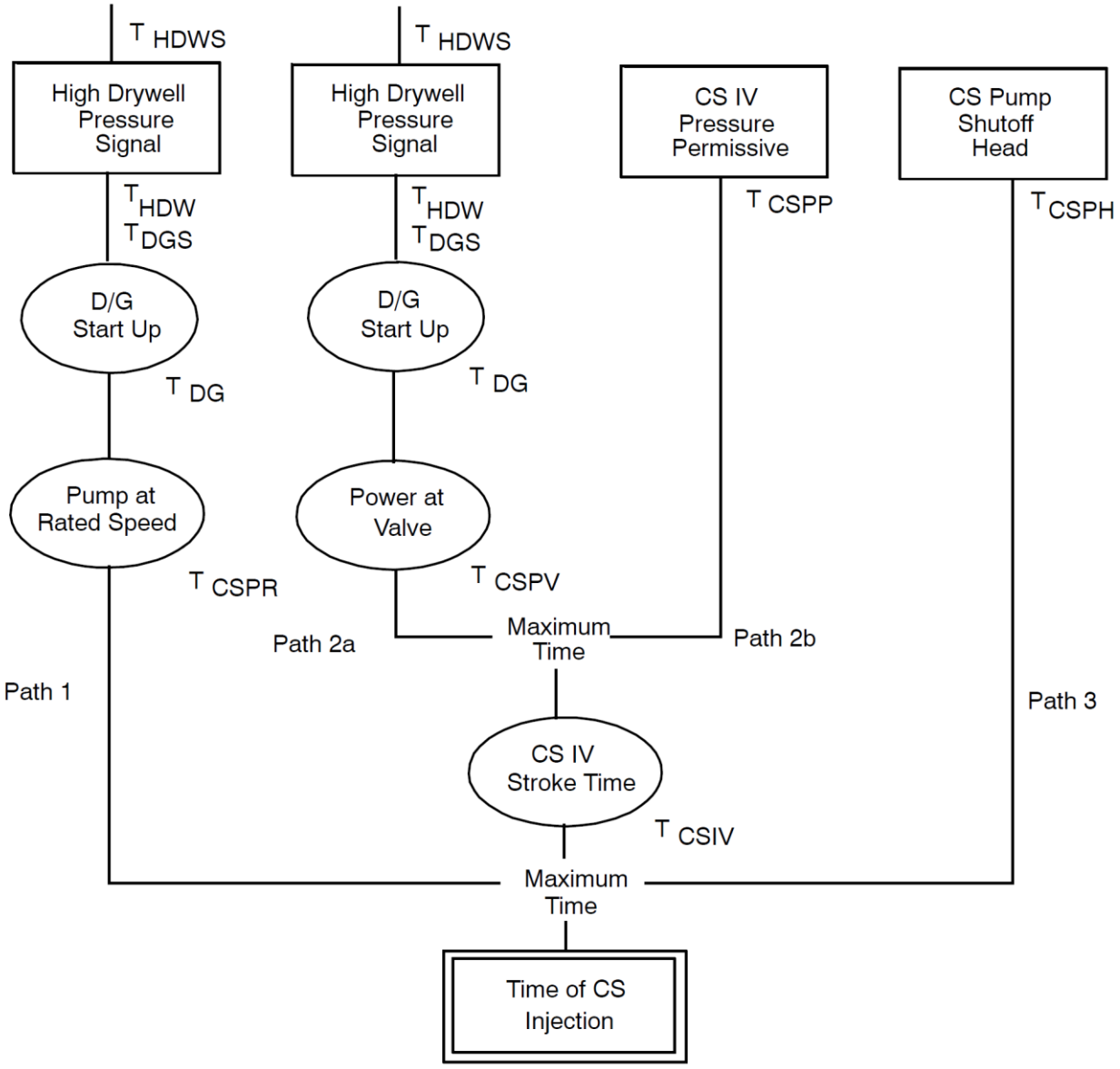

Blocks indicate initiation signals.

Elipses indicate equipment parameters.

Figure 14.7-12 LPCI Initiation Logic

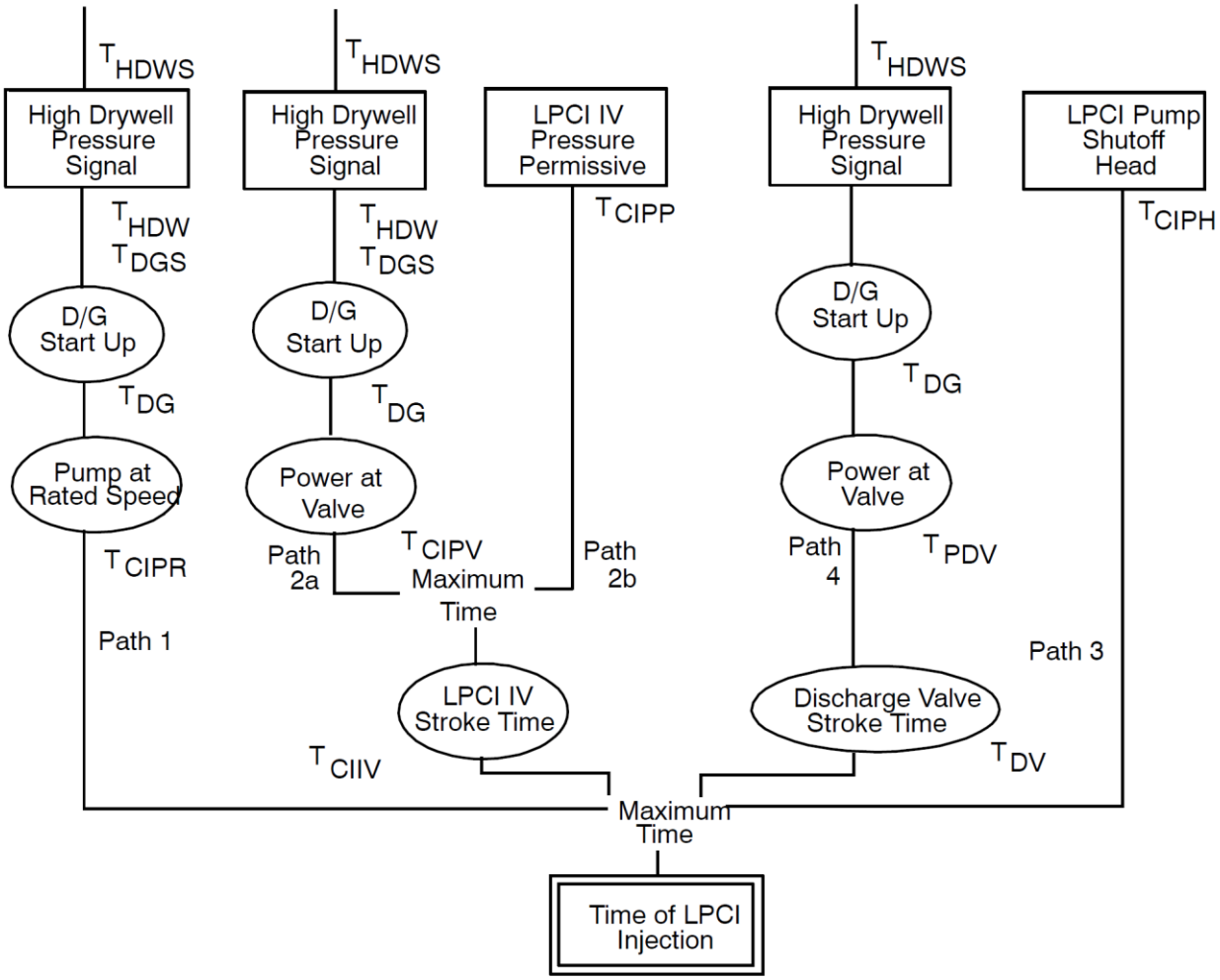

Blocks indicate initiation signals.

Elipses indicate equipment parameters.

Figure 14.7-13 Main Steam Line Break Accident, Break Location

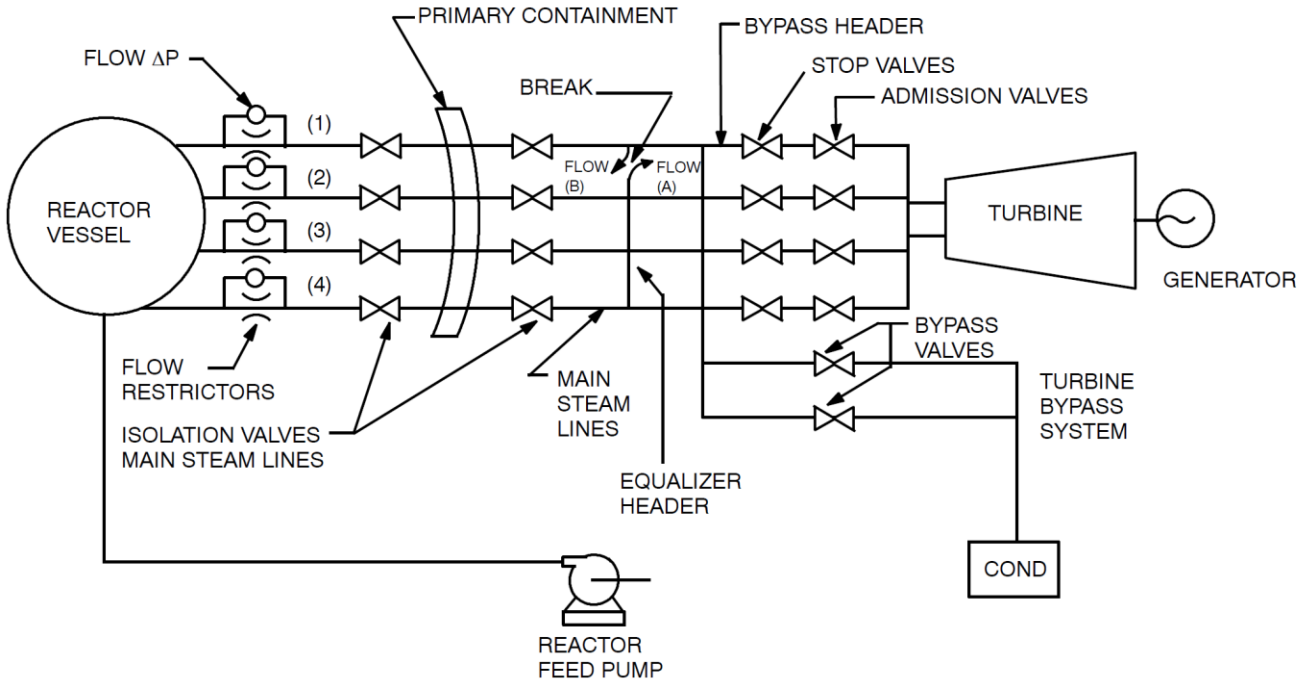

Figure 14.7-14 Flow Diagram for EXEM BWR-2000 ECCS Evaluation Model

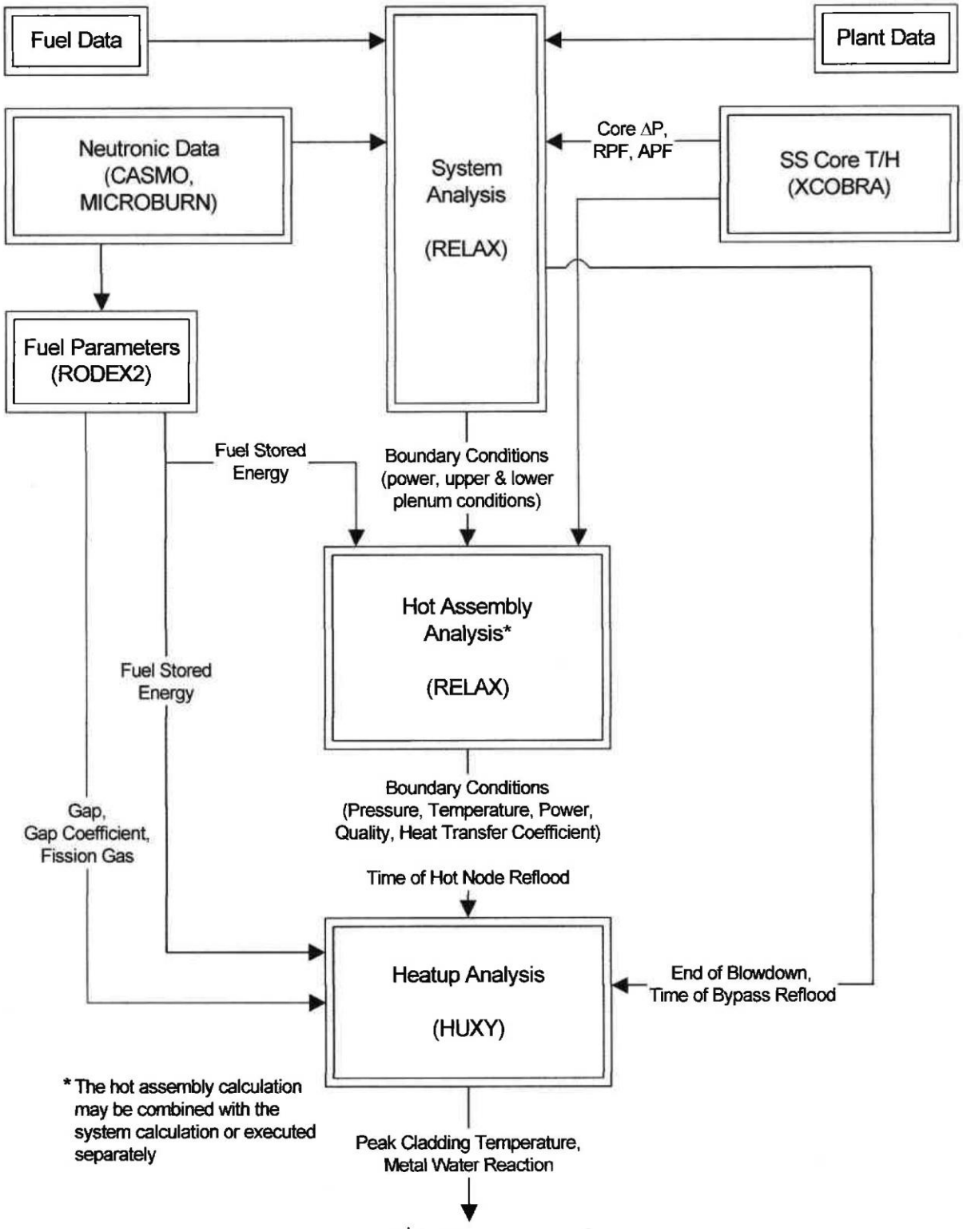

01511192

UPDATED SAFETY ANALYSIS REPORT

Section 14A Update for Monticello Cycle 29

NAD-MN-044, Revision 0
July 2017

604000000100

Xcel Energy® Xcel Energy Nuclear Analysis and Design Report	NAD-MN-044	Revision:	0
	Issue Date: July, 2017		
	Page 1 of 24		

UPDATED SAFETY ANALYSIS REPORT
Section 14A Update for Monticello Cycle 29

NAD-MN-044, Revision: 0

July 2017

Prepared By: Kenneth M Smolinske — Digitally signed by Kenneth M Smolinske DN: cn=Kenneth M Smolinske, o, ou, email=kenneth.smolinske@xenuclear.com, c=US Date: 2017.07.21 09:20:39 -05'00'
Kenneth Smolinske — Date
Sr. Engineer, Nuclear Analysis & Design

Reviewed By: Keith Dehnbostel — Digitally signed by Keith Dehnbostel DN: cn=Keith Dehnbostel, o, ou, email=keith.dehnbostel@xenuclear.com, c=US Date: 2017.07.21 10:04:36 -05'00'
Keith Dehnbostel — Date
Sr. Engineer, Nuclear Analysis & Design

Reviewed By: Darius Ahrar — Digitally signed by Darius Ahrar DN: cn=Darius Ahrar, o=Xcel Energy, ou, email=darius.ahrar@xenuclear.com, c=US Date: 2017.07.21 11:51:51 -05'00'
Darius Ahrar — Date
Supervisor, Nuclear Analysis & Design

Approved By: Henry Hoelscher — Digitally signed by Henry Hoelscher DN: cn=Henry Hoelscher, o=Xcel Nuclear, ou=NAD, email=henry.hoelscher@xenuclear.com, c=US Date: 2017.07.21 12:55:03 -05'00'
H. L. Hoelscher — Date
Manager, Nuclear Analysis & Design

UPDATED SAFETY ANALYSIS REPORT Section 14A Update for Monticello Cycle 29 NAD-MN-044	Revision: 0 Page 2 of 24

Table of Contents

UPDATED SAFETY ANALYSIS REPORT Section 14A Update for Monticello Cycle 29 NAD-MN-044	Revision: 0 Page 3 of 24

UPDATED SAFETY ANALYSIS REPORT Section 14A Update for Monticello Cycle 29 NAD-MN-044	Revision: 0 Page 4 of 24

List of Tables

UPDATED SAFETY ANALYSIS REPORT Section 14A Update for Monticello Cycle 29 NAD-MN-044	Revision: 0 Page 5 of 24

1.0 INTRODUCTION

This is a summary of the core loading and transient analysis results presented in the Reload Safety Analysis Report (RSAR) for Monticello Reload 28 Cycle 29, ANP-3563P, Rev. 2, April 2017 (Reference 1). The information in this RSAR is referenced in various USAR sections.

The data provided in this USAR Section 14A update is applicable to operation at the rated power of 2004 MWt with Extended Flow Window (EFW).

Analyses and results support the Extended Operating Domain (EOD) and Equipment Out-of-Service (EOOS) conditions listed in Table 1.1.

The results of Reference 1 demonstrate that the Monticello Cycle 29 core design complies with the existing design and licensing basis criteria for the plant.

Table 1.1
EOD and EOOS Operating Conditions

Extended Operating Domain (EOD) Conditions	Increased Core Flow Extended Flow Window (EFW) Coastdown
Equipment Out-of-Service (EOOS) Conditions	Pressure regulator out-of-service (PROOS) Single-loop operation (SLO)

2.0 CORE LOADING

The final core loading pattern analyzed in this report was transmitted to AREVA* in correspondence NOT-FAB-ARV-MN-29-2016-005 (Reference 7). The Monticello Cycle 29 initial core loading is described in Table 2.1.

Table 2.1
Monticello Cycle 29 Initial Core Loading

Bundle Type [EDB #]	Cycle Inserted	Bundle ID	Number of Bundles	Initial Avg. Enrich. w/o U235
GE14-P10DNAB373-16GZ [3375]	26	JYS001 – JYS032	16	3.73
GE14-P10DNAB391-15GZ [3377]	26	JYS073 – JYS104	4	3.91
GE14-P10DNAB372-17GZ [4175]	27	JYY414 – JYY469	56	3.72
GE14-P10DNAB386-16GZ [4176]	27	JYY470 – JYY517	48	3.86
GE14-P10DNAB386-16GZ [4177]	27	JYY518 – JYY541	24	3.86
GE14-P10DNAB389-11GZ [4178]	27	JYY542 – JYY565	24	3.89
GE14-P10DNAB374-16GZ [4332]	28	YLG503 – YLG566	64	3.74
GE14-P10DNAB384-15GZ [4333]	28	YLG567 – YLG610	44	3.84
GE14-P10DNAB387-16GZ [4337]	28	YLG611 – YLG626	16	3.87
GE14-P10DNAB389-11GZ [4338]	28	YLG627 – YLG666	40	3.89
ATRIUM10-XM XMLC-3966B-14GV75	29	M29001 – M29044	44	3.97
ATRIUM10-XM XMLC-3973B-12GV75	29	M29045 – M29104	60	3.97
ATRIUM10-XM XMLC-3990B-13GV50	29	M29105 – M29148	44	3.99

The EDB # is the Engineering Database Number for Global Nuclear Fuel (GNF) fuel.

The “Bundle ID” and “Number of Bundles” for the Cycle 29 fuel come from the Startup and Operations Report (Reference 2).

* ATRIUM is a trademark of AREVA, Inc.

3.0 MECHANICAL DESIGN ANALYSIS

The results of mechanical design analyses for ATRIUM 10XM fuel are presented in References 3 and 4.

The fuel cycle design analyses (Reference 5) verified all fuel assemblies remain within licensed burnup limits.

4.0 THERMAL-HYDRAULIC DESIGN ANALYSIS

4.1 THERMAL-HYDRAULIC DESIGN AND COMPATIBILITY

Results of thermal-hydraulic characterization and compatibility analyses are presented in Reference 6. Analyses were performed for various state points across the power/flow map. Analysis results demonstrate the thermal-hydraulic design and compatibility criteria are satisfied for the transition core consisting of ATRIUM 10XM and GE14 fuel.

4.2 SAFETY LIMIT MCPR ANALYSIS

The safety limit minimum critical power ratio (SLMCPR) is defined as the minimum value of the critical power ratio (CPR) ensuring less than 0.1% of the fuel rods are expected to experience boiling transition during normal operation or an Anticipated Operational Occurrence (AOO).

For the EFW region, the NRC requires that a core power / core flow ratio of 42 MWt/Mlb/hr serve as the threshold above which a 0.03 penalty must be added to the SLMCPR otherwise supported by AREVA analysis methods.

The 0.03 penalty is not applied when Monticello is operating in the Maximum Extended Load Line Limit (MELLLA) region or operating in the EFW region where the ratio of core power to core flow is < 42 MWt / Mlbm/hr. The 0.03 penalty implemented when the ratio of core power to core flow is ≥ 42 MWt / Mlbm/hr in the EFW region is not applicable to the SLO SLMCPR, because SLO is not allowed in the EFW.

- SLMCPR = 1.15 (two-loop operation where core power / core flow < 42 MWt/Mlb/hr
- SLMCPR = 1.19 (two-loop operation where core power / core flow ≥ 42 MWt/Mlb/hr
- SLMCPR = 1.20 (single-loop operation)

4.3 CORE HYDRODYNAMIC STABILITY

Monticello has implemented Long Term Stability Solution Enhanced Option III (EO-III) to support EFW operation. The EO-III solution consists of two components; a Channel Instability Exclusion Region (CIER), and a stability-based Operating Limit Minimum Critical Power Ratio (OLMCPR).

The CIER is protected by automatic scram. The CIER is defined to prevent operation where the channel decay ratio can approach a value of 1.0. A channel decay ratio less than 0.80 is used to account for the code uncertainty. This constant decay ratio line is then lowered by 5% of rated power in order to bound any normal operational variations in bundle conditions. The effect of bypass boiling on the APRM (Average Power Range Monitor) signal has been evaluated.

Calculations were performed for the relative change in CPR as a function of the calculated hot channel oscillation magnitude. The stability-based OLMCPRs are calculated using the most limiting of the calculated change in relative CPR for a given oscillation magnitude or the generic value provided in Reference 8.

The stability-based OLMCPR is provided for two conditions as a function of OPRM (Oscillation Power Range Monitor) amplitude setpoint. The two conditions evaluated are for a postulated oscillation at 45% core flow steady-state (SS) operation and following a two recirculation pump trip (2PT) from the limiting full power operation statepoint. The OLMCPR values at these two conditions are provided in Table 16 of the Cycle 29 Core Operating Limits Report (COLR) (Reference 12). The EO-III solution is not affected by LPRM (Local Power Range Monitor) miscalibration and does not require additional uncertainty factors to account for bypass voiding effects.

Endpoints for the Backup Stability Protection regions have global decay ratios < 0.85, and regional and channel decay ratios < 0.80.

4.4 VOIDING IN THE CHANNEL BYPASS REGION

Bypass voiding is of great concern for stability analysis due to its direct impact on the fuel channel flow rates and the axial power distributions.

The bypass void level has been evaluated throughout the cycle and the maximum bypass void value applicable to the Cycle 29 design is acceptable.

5.0 ANTICIPATED OPERATIONAL OCCURRENCES

This section identifies the transient and accident analyses performed as part of the current cycle RSAR (Reference 1). Table 5.1 lists the transients and accidents performed for the licensing analysis on a cycle-specific and cycle-independent basis.

In addition to the events listed in Table 5.1, a GE Services Information Letter (SIL) event, and other issues were evaluated. These events are listed below.

- GE SIL 502 (Revision 1) Single Turbine Control Valve Slow Closure Event
- Pneumatic System Degradation (Turbine Trip with Bypass and degraded scram speed)
- Loss of Stator Cooling

The power- and flow-dependent Minimum Critical Power Ratio (MCPR) operating limits and power- and flow-dependent Linear Heat Generation Rate (LHGR) multipliers for Monticello are established for base case operation (no EOOS) and for operation with EOOS.

Following is a summary of the transient and accident analyses for this cycle (Reference 1).

Table 5.1
Transients and Accidents for Reload Evaluation

	Event Type	Current Cycle Analysis
1)	**Primary System Pressure Increase**	
	Generator Load Rejection with Bypass Failure	✓
	Turbine Trip with Bypass Failure	✓
	Main Steam Isolation Valve Closure (One / All Valves)	
	Turbine Trip with Bypass Failure without Position Scram [1]	
	Main Steam Isolation Valve Closure without Position Scram [1]	✓
	Loss of Condenser Vacuum	
	Pressure Regulator Failure - Full Close (Downscale)	
	Loss of Auxiliary Power – All Grids	
2)	**Reactor Vessel Water Temperature Decrease**	
	Feedwater Controller Failure – Maximum Demand	✓
	Loss of Feedwater Heating (95.3 °F)	✓
	Inadvertent High Pressure Coolant Injection Actuation with L8 (HPCI/L8) Turbine Trip	✓
3)	**Positive Reactivity Insertion**	
	Rod Withdrawal Error	✓
4)	**Reactor Vessel Coolant Inventory Decrease**	
	Pressure Regulator Failure - Full Open	✓
	Inadvertent Opening of Safety/Relief Valve	
	Loss of Feedwater Flow	
	Loss of Auxiliary Power Transformers	
5)	**Core Coolant Flow Decrease**	
	Recirculation Flow Control Failure – Decrease	
	Trip of One Recirculation Pump	
	Trip of Two Recirculation Pumps	
	Recirculation Pump Seizure	✓ (in SLO)
6)	**Core Coolant Flow Increase**	
	Slow Recirculation Control Failure – Increase ($MCPR_F$) [2]	✓
	Slow Recirculation Control Failure – Increase ($MAPLHGR_F$) [3]	✓
	Fast Recirculation Control Failure – Increase	✓
	Startup of an Idle Recirculation Loop	
7)	**Fuel Loading Errors**	
	Misoriented Bundle Accident	✓
	Mislocated Bundle Accident	✓

Notes:

[1] Performed for ASME Vessel Overpressure Compliance.
[2] $MCPR_F$ is flow-dependent MCPR
[3] $MAPLHGR_F$ (flow-dependent MAPLHGR) is only applicable to GE14. Flow-dependent LHGRs apply to both GE14 and ATRIUM 10XM.

5.1 SYSTEM TRANSIENTS

Analyses have been performed to determine power- and flow-dependent MCPR limits and power- and flow-dependent LHGR multipliers that protect operation throughout the power/flow domain.

Thermal limits only need to be monitored at power levels greater than or equal to 25% of rated, which is the lowest power analyzed for the M29 RSAR.

The limiting exposure for rated power pressurization transients is typically at end of full power (EOFP) when the control rods are fully withdrawn. The licensing basis EOFP analysis was performed at EOFP + 400 MWd/MTU (cycle exposure of 14,740 MWd/MTU). Analyses were performed to support coastdown operation to a cycle exposure of 16,212 MWd/MTU.

Pressurization transient analyses only credit the safety setpoints of the safety/relief valves (SRV). The base operating limits support operations with 3 SRVs out-of-service.

Variations in feedwater temperature and variation in dome pressure are considered base case operation, not an EOOS condition.

System pressurization transient results are sensitive to scram speed assumptions. To take advantage of average scram speeds faster than those associated with the Technical Specifications requirements, scram speed-dependent MCPRp limits are provided.

The nominal scram speed (NSS) MCPRp limits can only be applied if the scram speed test results meet the NSS insertion times. System transient analyses were performed to establish MCPRp limits for both NSS and Technical Specifications scram speed (TSSS) insertion times.

For cases below 40% power, the results are relatively insensitive to scram speed, and only TSSS analyses are performed. At 40% power (Pbypass), analyses were performed, both with and without bypass of the direct scram function, resulting in an operating limits step change.

One event (Turbine Trip With Bypass and Degraded Scram) is analyzed with a degraded scram speed (DSS). The turbine bypass is allowed to open to mitigate the severity of the event. The MCPRp limits for NSS and TSSS insertion times will protect this event analyzed with DSS insertion times.

Tables 5.2 and 5.3 summarize the transient results for the current cycle Reload Safety Analysis Report (Reference 1). Table 5.2 identifies the event and maximum ΔCPR results. Table 5.3 identifies the event and OLMCPR results. The results presented are valid for the ATRIUM 10XM and GE14 bundle types. If any columns are merged together in a single column, then the same ΔCPR and OLMCPR are applicable to all merged columns for that event.

UPDATED SAFETY ANALYSIS REPORT Section 14A Update for Monticello Cycle 29 NAD-MN-044	Revision: 0 Page 13 of 24

Table 5.2
Monticello Cycle 29 Transient and Accident ΔCPR Values
Beginning of Cycle (BOC) to EOFP

	ΔCPR			
Event	TSSS ATRIUM 10XM	NSS ATRIUM 10XM	TSSS GE14	NSS GE14
Transients				
Feedwater Controller Failure – Maximum Demand	0.46	0.42	0.45	0.40
Generator Load Rejection Without Bypass	0.37	0.25	0.35	0.25
Loss of Feedwater Heating [1]	0.18		0.19	
Pneumatic System Degradation, Turbine Trip With Bypass – Degraded Scram Speeds	0.41		0.40	
Rod Withdrawal Error [1]				
Single Turbine Control Valve Slow Closure [1] (GE SIL502, Rev.1)	Bounded by other events, so determined to be non-limiting			
Stability	OPRM Setpoint is set so that stability is non-limiting.			
Turbine Trip Without Bypass	0.43	0.40	0.43	0.38
Inadvertent HPCI/L8 Turbine Trip	0.52	0.47	0.50	0.45
Accidents				
LOCA Analysis Limit MCPR				
Misoriented Bundle [1]	0.32			
Misplaced Bundle [1]	0.32			
Recirculation Pump Seizure (in SLO) [2]	The OLMCPR for SLO assures that this accident does not violate the AOO acceptance criteria.			

Notes

1 Events not sensitive to scram insertion time.
2 Based on the SLO SLMCPR of 1.20 and adjusted for off-rated power/flow.

UPDATED SAFETY ANALYSIS REPORT Section 14A Update for Monticello Cycle 29 NAD-MN-044	Revision: 0 Page 14 of 24

Table 5.3
Monticello Cycle 29 Transient and Accident OLMCPR Values
BOC to EOFP

	OLMCPR			
Event	TSSS ATRIUM 10XM	NSS ATRIUM 10XM	TSSS GE14	NSS GE14
Transients				
Feedwater Controller Failure – Maximum Demand	1.61[4]	1.57[4]	1.60[4]	1.55[4]
Generator Load Rejection Without Bypass	1.52[4]	1.40[4]	1.50[4]	1.40[4]
Loss of Feedwater Heating [1]	1.37[5]		1.38[5]	
Pneumatic System Degradation, Turbine Trip With Bypass – Degraded Scram Speeds	1.56[4]		1.55[4]	
Rod Withdrawal Error [1, 3]	1.60			
Single Turbine Control Valve Slow Closure [1] (GE SIL502, Rev.1)	Bounded by other events, so determined to be non-limiting			
Stability	1.59 OPRM Setpoint is set so that stability is non-limiting.			
Turbine Trip Without Bypass	1.58[4]	1.55[4]	1.58[4]	1.53[4]
Inadvertent HPCI/L8 Turbine Trip	1.67[4]	1.62[4, 6]	1.65[4]	1.60[4]
Accidents				
LOCA Analysis Limit MCPR	1.40		1.35	
Misoriented Bundle [1]	1.47[4]			
Misplaced Bundle [1]	1.47[4]			
Recirculation Pump Seizure (in SLO) [2]	The OLMCPR for SLO is modified to assure that this accident does not violate the AOO acceptance criteria.			

Notes

1 Events not sensitive to scram insertion time.
2 Based on the SLO SLMCPR of 1.20 and adjusted for off-rated power/flow.
3 This OLMCPR corresponds to the Rod Block Monitor (RBM) analytical High Trip Setpoint of 114.0%.
4 Based on the Two Loop Operation (TLO) SLMCPR of 1.15 (for transients initiated below 42 MWt/Mlb/hr) added to the maximum ΔCPR values from Table 5.2.
5 Based on the TLO SLMCPR of 1.19 (for transients initiated at or above 42 MWt/Mlb/hr) added to the maximum ΔCPR values from Table 5.2.
6 For exposures after licensing basis EOFP, NSS ATRIUM 10XM OLMCPR = 1.63.

5.1.1 Input Conditions for the Analyses

A sufficient set of power/flow state points and exposures was evaluated to ensure conservative power-dependent MCPR operating limits were established to cover operation within the allowed regions on the power/flow map and to ensure the operating limits provide the necessary protection from BOC to EOC.

Transient analyses account for ranges in key parameters (e.g. dome pressure, feedwater temperature) provided in Reference 11. The plant parameters document provides two sets of scram insertion times.

To provide margin for licensing compliance, the cycle 29 depletion was generated with two power shapes: a more bottom-peaked power shape early in the cycle, which results in a higher axial offset at licensed EOFP and a less bottom-peaked power shape earlier in the cycle, which results in a lower axial offset at licensed EOFP

5.1.2 Control Rod Withdrawal Error (CRWE)

The CRWE results are shown in Table 5.4 for the analytical RBM trip setpoint values of 114%, 119%, and 124% for the high, intermediate, and low trip setpoints, respectively. These results correspond to the trip setpoints and allowable values provided in Section 4.0 of the Cycle 29 COLR (Reference 12).

Table 5.4
CRWE Results for Two Loop Operation

High Power Range			Intermediate Power Range			Low Power Range		
RBM Trip Setpoint (%)	Core Power (% rated)	MCPR	RBM Trip Setpoint (%)	Core Power (% rated)	MCPR	RBM Trip Setpoint (%)	Core Power (% rated)	MCPR
114	100	1.60	119	85	1.78	124	65	1.81
	85	1.64		65	1.81		30	2.14

5.2 EQUIPMENT OUT-OF-SERVICE SCENARIOS

The EOOS scenarios supported for Monticello Cycle 29 operation are shown in Table 1.1. The EOOS scenarios supported are:

- Single-loop operation (SLO) - recirculation loop out-of-service
- Pressure regulator out-of-service (PROOS)

The base case thermal limits support operation with 3 SRVs out-of-service, up to 1 TIP (Traversing Incore Probe) out of service (or the equivalent number of TIP channels), and an LPRM calibration interval of 1000 MWd/ST average core exposure. The

requirements associated with LPRM surveillance permit the frequency to be extended up to 25% of the specified frequency.

5.3 LICENSING POWER SHAPE

The licensing axial power profile used by AREVA for the plant transient analyses bounds the projected end of full power axial power profile. Cycle 29 operation is considered to be in compliance when the power shape meets the criteria described in Reference 1.

6.0 POSTULATED ACCIDENTS

6.1 LOSS OF COOLANT ACCIDENT (LOCA)

LOCA break spectrum analyses are performed to identify the conditions that result in the highest calculated peak cladding temperature (PCT) during a postulated LOCA. The break spectrum analyses have been repeated using revised ECCS parameters. There are no methodology changes between break spectrum analyses performed with the original and revised ECCS parameters.

Exposure dependent LOCA heatup analyses are perform to establish MAPLHGR (Maximum Average Planar Linear Heat Generation Rate) limits which assure the 10 CFR 50.46 criteria are satisfied. Exposure dependent heatup analyses are performed each reload for any new nuclear fuel design.

Analyses and results support the EOD and EOOS conditions listed in Table 1.1.

6.2 PUMP SEIZURE ACCIDENT

The pump seizure accident is non-limiting during TLO but more severe during SLO. Seizure of the recirculation pump in the active loop during SLO was analyzed and evaluated relative to the acceptance criteria for AOO. Since single loop pump seizure event is more severe as power and flow increase, the event is analyzed at the maximum core power and core flow during SLO (66% core power and 52.5% core flow).

Thermal limits were determined to protect against this event in single-loop operation.

6.3 CONTROL ROD DROP ACCIDENT (CRDA)

CRDA evaluation was performed for both A and B sequence startups consistent with that allowed by Banked Position Withdrawal Sequence.

The CRDA analysis results demonstrated that the acceptance criteria (maximum deposited fuel rod enthalpy criterion and the estimated number of fuel rods that exceed the fuel damage threshold criterion) are satisfied.

6.4 FUEL AND EQUIPMENT HANDLING ACCIDENT

The fuel handling accident radiological analysis of record for the alternative source term (AST) remains applicable for Cycle 29.

6.5 FUEL LOADING ERROR

There are two types of fuel loading errors possible in a BWR: the mislocation of a fuel assembly in a core position prescribed to be loaded with another fuel assembly, and the misorientation of a fuel assembly with respect to the control blade.

A bounding fuel mislocation error analysis was performed. The results show the SLMCPR is not violated (mislocation analysis ΔCPR result of 0.32 is well below the limiting AOO).

A bounding fuel assembly misorientation analysis was performed. The results show the SLMCPR is not violated (misorientation analysis ΔCPR result of 0.32 is well below the limiting AOO).

The fuel loading errors are characterized as infrequent events.

The mislocation and misorientation fuel loading errors are by nature long term events (i.e. not transients). Further, they are nonlimiting events when considering the change in LHGR that the fuel assemblies experience; therefore, the offsite dose criterion (a small fraction of 10 CFR 50.67) is conservatively satisfied.

7.0 SPECIAL ANALYSES

7.1 ASME OVERPRESSURIZATION ANALYSIS

The ASME overpressure analysis must confirm that the reactor coolant pressure boundary does not exceed pressure limits. The maximum allowable pressure for the reactor dome and the main steam line from vessel to outboard Main Steam Isolation Valves (MSIVs) is 1332 psig. The maximum allowable vessel pressure is 1375 psig.

The ASME event was analyzed at 102% core power and both 80% and 105% core flow at the highest cycle exposure. MSIV closure, turbine stop valve (TSV) closure, and turbine control valve (TCV) closure were analyzed. The following assumptions were made in the analysis:

- Direct scram on valve position was assumed to fail.
- Scram on high neutron flux and high dome pressure is available.
- Turbine bypass valves were not credited.
- 3 SRVs out of service.
- SRVs open at safety setpoint
- Available SRVs open at 1145 psig (approximately 3% drift Tech Spec opening setpoint).
- TSSS insertion times were used
- Initial dome pressure was set at the maximum allowed 1040.0 psia.
- A fast MSIV closure time of 3.0 seconds was used.
- The highest peak pressures with and without ATWS-RPT (Anticipated Transient Without Scram – Recirculating Pump Trip) are reported.

The maximum vessel pressure of 1344 psig occurs at the bottom of the vessel for a closure of the TSV at 102P/105F when ATWS-RPT is modeled. The maximum steam dome pressure of 1326 psig occurs for a closure of the TSV at 102P/105F when ATWS-RPT is modeled. The maximum main steam line pressure of 1327 psig occurs for a closure of the TSV at 102P/105F when ATWS-RPT is modeled. These results demonstrate that the vessel pressure limit of 1375 psig is protected. These results also demonstrate that the steam dome pressure limit, and steam line pressure limit of 1332 psig are protected.

7.2 ANTICIPATED TRANSIENT WITHOUT SCRAM (ATWS) EVENT EVALUATION

This analysis is performed to demonstrate that the peak vessel pressure for the limiting ATWS event is less than the ASME Service Level C limit of 120% of the design pressure (1500 psig). Overpressurization analyses were performed at 102% core power at both 80% and 105% core flow over the cycle exposure range for both the MSIV closure event and the pressure regulator failure open (PRFO) events. The PRFO event used as initiator for ATWS analyses was determined to be limiting.

The following assumptions were made in the analyses:

- ATWS-RPT was allowed.
- 1 SRV out of service and 7 SRVs open at safety mode setpoints.
- SRVs opening setpoint at approximately 5% over the Technical Specifications
- All scram functions were disabled.
- Nominal values used for initial dome pressure and feedwater temperature
- A nominal MSIV closure time used for both events.

The maximum lower vessel pressure is 1470 psig and the maximum steam dome pressure is 1455 psig. The results demonstrate that the ATWS maximum vessel pressure limit of 1500 psig is not exceeded.

7.3 ATWS AND INSTABILITY (ATWS-I)

The ATWS-I calculations were performed for a mixed core representing the transition from GE14 fuel to ATRIUM 10XM fuel and an equilibrium core loaded with ATRIUM 10XM fuel. No cycle specific calculations are needed.

7.4 REACTOR CORE SAFETY LIMITS – LOW PRESSURE SAFETY LIMIT, PRESSURE REGULATOR FAILED OPEN EVENT (PRFO)

The PRFO event was analyzed in support of the fuel transition LAR.

This event was analyzed to determine the lowest steam dome pressure. Since the core power and heat flux drop throughout this event, followed by a direct scram, this event poses no threat to thermal limits.

The lowest steam dome pressure that was reached was 665 psia (650 psig). The critical power correlations for ATRIUM 10XM fuel and for GE14 fuel are applicable for pressures above 600 psia. The low pressure safety limit in the Monticello Technical Specification is 586 psig for AREVA methods.

Cycle specific PRFO analyses are not needed. The PRFO calculations performed in support of the fuel transition will remain applicable unless the maximum closure time for the MSIV increases beyond 9.9 seconds or AREVA changes transient methodologies.

UPDATED SAFETY ANALYSIS REPORT Section 14A Update for Monticello Cycle 29 NAD-MN-044	Revision: 0 Page 21 of 24

7.5 STANDBY LIQUID CONTROL SYSTEM (SLCS)

The standby liquid control system (SLCS) is required to be capable of bringing the reactor from full power to a cold shutdown condition at any time in the core life. The SLCS is required to be able to inject 660 ppm natural boron equivalent at 70F into the reactor coolant. The SLCS meets the required shutdown capability for the cycle. The analysis was performed at a coolant temperature of 319.2F, with a boron concentration equivalent to 660 ppm at 68F*. The core will be subcritical throughout the cycle by at least 2.02 %dk/k based on the Cycle 28 end of cycle (EOC) short window and conservative assumptions regarding eigenvalue biases and uncertainties in the Cycle 29 core.

* Monticello licensing basis documents indicate a minimum of 660 ppm boron at a temperature of 70°F. The AREVA cold analysis basis of 68°F represents a negligible difference and the results are adequate to protect the 70°F licensing basis for the plant.

7.6 SHUTDOWN MARGIN

The cycle design calculations demonstrate adequate cold shutdown margin throughout the cycle. The shutdown margin for Cycle 29 is in conformance with the Technical Specification limit.

8.0 OPERATING LIMITS AND COLR INPUT

8.1 MCPR

Determination of OLMCPR limits is based on analyses to determine SLMCPR and analyses to determine the limiting AOOs.

OLMCPR = SLMCPR + Maximum ΔCPR

MCPR limits support operation from BOC to EOC, base case operation, and the EOOS conditions in Table 1.1. Separate OLMCPR are established for ATRIUM 10XM fuel and for GE14 fuel.

Exposure dependent OLMCPR are established to provide improved OLMCPR during much the cycle.

For Cycle 29 the SLMCPR for TLO has a different value depending on whether the initial operating condition is above or below 42 MWt/Mlb/hr.

MCPRp limits at each core power are established as the larger of the
1.15 + Maximum ΔCPR for P/F < 42 MWt/Mlb/hr
and
1.19 + Maximum ΔCPR for P/F ≥ 42 MWt/Mlb/hr

OLMCPRs are established to protect the SLMCPR applicable to the steady state conditions prior to the AOO or to protect the SLMCPR applicable to the steady state conditions after the AOO, whichever SLMCPR is larger. For AOOs which result in a scram, the SLMCPR applicable to the steady state conditions prior to the AOO is added to the change in CPR during the AOO.

8.2 LHGR

The LHGR limits for ATRIUM 10XM fuel and for GE14 fuel are presented in the COLR in Tables 14 and 15, respectively.

Power- and flow-dependent multipliers (LHGRFACp and LHGRFACf) are applied directly to the LHGR limits to protect against fuel melting and overstraining of the cladding during an AOO.

LHGRFACp multipliers were established to support operation at all cycle exposures for both NSS and TSSS insertion times and for the EOOS conditions identified in Table 1.1.

Analyses in Section 3.0 of Reference 4 demonstrate that the 1% strain and centerline melt criteria are met for ATRIUM 10XM fuel.

8.3 MAPLHGR

The MAPLHGR limits for ATRIUM 10XM fuel are presented in the COLR in Table 3.

The MAPLHGR limits for GE14 fuel are presented in the COLR in Tables 4 to 13.

Power- and flow-dependent MAPLHGR multipliers are not required for the ATRIUM 10XM. MAPLHGR limits as well as power- and flow-dependent MAPLHGR multipliers for the GE14 have been established by Global Nuclear Fuel – Americas, LLC (GNF).

For operation in SLO, a multiplier of 0.7 must be applied to the TLO MAPLHGR limits for ATRIUM 10XM and a multiplier of 0.83 must be applied to the TLO MAPLHGR limits for GE14.

9.0 REFERENCES

1. AREVA Report, "Monticello Reload Safety Analysis Report for Cycle 29", ANP-3563P, Revision 2, April 2017. (NAD SharePoint TD-ARV-ANP-3563P-02).

2. AREVA Report, "Monticello Cycle 29 Startup and Operations Report" ANP-3585P, Revision 0, April 2017. (NAD SharePoint TD-ARV-ANP-3585P-00)

3. AREVA Report, "Mechanical Design Report for Monticello ATRIUM™ 10XM Fuel Assemblies", ANP-3119P Revision 1, AREVA Inc., October 2016.

4. AREVA Report, "Fuel Rod Thermal-Mechanical Design for Monticello ATRIUM™ 10XM Fuel Assemblies, Cycle 29", ANP-3519P Revision 0, AREVA Inc., November 2016.

5. AREVA Report, "Monticello Cycle 29 Fuel Cycle Design", ANP-3521P Revision 0, AREVA Inc., September 2016.

6. AREVA Report, "Monticello Thermal-Hydraulic Design Report for ATRIUM™ 10XM Fuel Assemblies ", ANP-3092(P) Revision 1, AREVA Inc., June 2016.

7. Correspondence, David Mienke (Xcel Energy) to Tony Will (AREVA), with subject, "Monticello Cycle 29; Modified Buyer Specification Package for Reload 28" dated July 22, 2016. (Fabrication Services SharePoint NOT-FAB-ARV-MN-29-2016-005; NAD SharePoint NFP-MN-29-060).

8. GNF Report, "Reactor Stability Detect and Suppress Solutions Licensing Basis Methodology for Reload Applications," NEDO-32465-A, GE Nuclear Energy, August 1996.

9. GNF Report, "General Electric Standard Application for Reactor Fuel (GESTAR II), NEDE-24011-P-A-20", December 2013; and "U.S. Supplement, NEDE-24011-P-A-20-US", December 2013. (NAD SharePoint TD-GEC-NEDE-24011-P-A-20 and TD-GEC- NEDE-24011-P-A-20-US).

10. AREVA Report, "Monticello Nuclear Plant Spent Fuel Storage Pool Criticality Safety Analysis for ATRIUM™ 10XM Fuel", ANP-3113(P) Revision 0, AREVA Inc., August 2012.

11. AREVA Report, "Monticello Cycle 29 Plant Parameters Document", ANP-3474P, Revision 0, August 2016. (NAD SharePoint TD-ARV-ANP-3474P-0)

12. Xcel Energy Report, "Monticello Nuclear Generating Plant Cycle 29 Proprietary [Non-Proprietary] Core Operating Limits Report", NAD-MN-042P [NAD-MN-042NP], Revision 2, June 2017; (NAD SharePoint TD-XCL-NAD-MN-042P [TD-XCL-NAD-MN-042NP]).