Attachment A

UNION OF CONCERNED SCIENTISTS

January 22, 1999

Chairman Shirley A. Jackson
Commissioner Nils J. Diaz
Commissioner Greta J. Dicus
Commissioner Edward McGaffigan, Jr.
Commissioner Jeffrey S. Merrifield
United States Nuclear Regulatory Commission
Washington, DC 20555-0001

SUBJECT: CURRENT EXAMPLE OF RISK-DEFORMED REGULATION

Dear Chairman and Commissioners:

During the January 11th Commission briefing on risk-informed regulation and during the January 20th briefing on the proposed reactor oversight process, I expressed our concern that the NRC and the nuclear industry are making risk decisions using incomplete and inaccurate data. As a current example, I call your attention to the license amendment application dated December 23, 1998, by the Carolina Power & Light Company involving spent fuel storage at the Harris Nuclear Power Plant and the subsequent proposed no significant hazards consideration determination (*Federal Register*: January 13, 1999, Vol. 64, No. 8) prepared by the NRC staff.

The licensee and the NRC staff have improperly downplayed the risk associated with the proposed activity. Their risk characterization is wrong. The licensee should be required to resubmit a corrected application and another *Federal Register* notice issued with a corrected proposed no significant hazards consideration determination.

The error involves the determination made by the licensee and endorsed by the staff regarding the affect of the proposed activity, namely placing storage racks in Spent Fuel Pools 'C' and 'D' at the Harris plant, on the probability of a fuel handling accident. From the *Federal Register* notice:

> "The probability that any of the accidents in the above list [a spent fuel assembly drop in a spent fuel pool / loss of spent fuel pool cooling flow / a seismic event / misloaded fuel assembly] can occur is not significantly affected by the activity itself. ... The probabilities of accidental fuel assembly drops or misloadings are primarily influenced by the methods used to lift and move these loads. The method of handling loads during normal plant operations is not signficantly changed, since the same equipment (i.e., Spent Fuel Handling Machine and tools) and procedures as those in current use in pools 'A' and 'B' will be used in pools 'C' and 'D.' Since the methods used to move loads during normal operations remain nearly the same as those used previously, there is no significant increase in the probability of an accident."

Washington Office: 1616 P Street NW Suite 310 • Washington DC 20036-1495 • 202-332-0900 • FAX: 202-332-0905
Cambridge Headquarters: Two Brattle Square • Cambridge MA 02238-9105 • 617-547-5552 • FAX: 617-864-9405
California Office: 2397 Shattuck Avenue Suite 203 • Berkeley CA 94704-1567 • 510-843-1872 • FAX: 510-843-3785

It is precisely this type of "smoke and mirrors" shenanigans that we decried during the briefings. The logic seems proper at face value, but it does not take much effort to show that it is wrong. In Enclosure 1 to the license amendment submittal, the licensee reported that the total storage capacity of pools 'A' and 'B' is 3,669 assemblies and that the proposed activity will add 4,715 storage locations in pools 'C' and 'D.' Thus, if the amendment is granted, CP&L will handle – pick up and move – about twice as many irradiated fuel assemblies as they will if the amendment is not granted.

Consider for a moment the old game of Russian roulette using a six-chamber revolver loaded with a single bullet. CP&L and the NRC staff would apparently conclude that the probability of losing the game are not increased whether one or two turns are taken because, after all, the same method and the same equipment are used each turn. Their logic is simply wrong. The probability of a fuel handling accident at Harris will nearly *double* if the license amendment request is granted. This material fact contradicts the conclusion of the licensee and the staff that there will be "no significant increase in the probability," unless doubling the risk is not significant.

Luckily, there's an opportunity to fix the mistake this time. Unfortunately, it's not the first, and probably won't be the last, time this mistake is made. The NRC staff made this same mistake in April 1998 when it allowed the Paducah facility to continue operating with its risk doubled.

We have no intention at this time of formally intervening in this Harris licensing action. We trust that the NRC staff will take the necessary steps to have the licensee fix the fundamental flaw in the licensing amendment request before granting it.

Sincerely,

David A. Lochbaum
Nuclear Safety Engineer

Attachment B

The Sacramento Bee

Sunday, April 2, 1995

FORUM

OPINION
EDITORIALS

Nobody knows how to store nuclear waste permanently

Nuclear waste to be stored at Seco for years

By Ed Smeloff

Ed Smeloff is a director of the Sacramento Municipal Utility District.

WITH LITTLE fanfare and no public opposition, SMUD has begun building a facility to store high-level nuclear waste next to the shuttered Rancho Seco nuclear power plant. Nestled among rolling pastures southeast of Sacramento, concrete and steel bunkers are being erected to hold canisters full of radioactive spent fuel – classified as high-level nuclear waste – for at least the next 25 years and perhaps for much longer.

Twenty-five years ago, when Rancho Seco was under construction, no one would have imagined that SMUD would have to build a nuclear waste storage facility that would end up being used for more years than the nuclear power plant itself.

In the late 1960s and early 1970s, when utilities were enthusiastically ordering nuclear power plants, they assumed that the federal government would quickly solve the problem of nuclear waste. But, despite the passage of many federal laws and the expenditure of nearly $2 billion, agreement on what to do with material that remains lethal for as long as 250,000 years has not been found. The U.S. Department of Energy is focusing its efforts on burying the waste in thousand-foot deep caverns to be excavated below the Southern Nevada desert. But that solution is vehemently opposed by the state of Nevada and is questioned by some of the government's own scientists.

Some in the atomic industry claim that the failure of the federal government to come up with a permanent solution has created a crisis that needs immediate legislative redress. Others, including the Congressional General Accounting Office, are calling for a comprehensive and independent review of nuclear waste policies and programs before federal laws are rewritten. Most environmental organizations believe that, given the current level of knowledge and technology, a permanent solution is illusory and that the best we can do is to safely store the waste in a retrievable manner.

While the policy debate is heating up, SMUD is building an Independent Spent Fuel Storage Installation (ISFSI) and purchasing multi-purpose casks which can be used both for the transportation and storage of nuclear fuel. Two public hearings were held in early 1994 as part of the environmental review of the project under the California Environmental Quality Act. Apparently, with the nuclear reactor now closed, there was little public interest in the specifics of waste storage. The multi-purpose casks SMUD has ordered still must be licensed by the Nuclear Regulatory Commission. SMUD estimates that the costs of the casks and the ISFSI will be $16.8 million.

Beginning next year SMUD will move the nuclear fuel at Rancho Seco from the spent fuel pool to the ISFSI. After being cooled in the water for five years, spent nuclear fuel can be safely removed to dry storage. At Rancho Seco 24 fuel assemblies will be loaded into each of 22 stainless steel canisters. Loading into the 15½-feet-long-by-5½-feet-in-diameter canisters will take place under water. Once filled, the canister will be removed from the pool and its lid welded shut. The canister will then be inserted into a 79-ton, multi-purpose cask with special shielding for gamma rays and neutrons. The cask will be loaded onto a specially designed trailer and transported several hundred yards to the ISFSI, where a hydraulic ram will push the canister out of the cask and insert it horizontally into a steel-lined concrete storage module. It is anticipated that all the fuel will be moved into dry storage by April 1997.

THE multi-purpose cask can be reused to transport additional canisters. It can also be used as a storage "overpack" to contain a leaking canister. The ability to provide storage for a damaged canister is required by the Nuclear Regulatory Commission so that SMUD can close the spent fuel pool once all the fuel is removed. Abandoning the pool will save SMUD about $10 million per year.

The storage module at Rancho Seco is designed to hold the canisters for at least 50 years. Eventually the concrete bunkers at the storage site will start to erode, and if there is still spent fuel at the site it would have to be transferred to a new set of bunkers. The greatest risk of storing fuel at sites like Rancho Seco is the potential for terrorism. A powerful bomb placed at a storage site could result in the release of radiation into the environment. Much of the annual $1.5-million budget for the facility will be spent on high-level security.

Four other nuclear power plants have already moved some of their spent fuel into dry storage. Most other utilities will need to build similar facilities soon. That has been made easier by a recent court ruling that eliminates the need for separate Nuclear Regulatory Commission hearings for utilities that use already licensed casks and canisters. Still, the facilities are subject to state environmental laws.

Dry storage is generally acknowledged to be safer than storage in a spent fuel pool. Dry storage requires no active mechanical systems that need to be maintained and that can break down. All that is routinely required is security and monitoring. The multi-purpose casks are available for fuel removal in any abnormal circumstance. The Nuclear Regulatory Commission estimates that casks can be safely used for interim storage for 100 years. And it's relatively inexpensive. At $1.5 million per year, SMUD could store spent fuel at the ISFSI for 50 years for what it cost to operate Rancho Seco for six months.

WHILE SMUD has been able to craft a temporary solution for Rancho Seco's wastes, recent events have demonstrated, again, how difficult national nuclear waste policy has become. Several scientists at the Los Alamos National Laboratory hypothesized that burying nuclear waste underground might trigger nuclear explosions contaminating ground water or even releasing radioactivity into the atmosphere.

The controversy – some of their colleagues sharply disputed the possibility – comes on top of the recent discovery by the Department of Energy of radioactive water – created by above-ground bomb tests – at depths of 1,000 feet below the Nevada desert. This finding indicates, according to the state of Nevada, that water can travel much more rapidly at the site of the proposed national nuclear repository than previously assumed. Water is the nemesis of safe, long-term waste storage. Federal guidelines for a permanent repository require that no water flow into the site in less than 1,000 years.

Since the federal government has been planning to bury spent fuel deep in the Nevada desert by 2010, these new controversies threaten to further delay this already troubled project. Many, including the General Accounting Office, had seriously questioned how realistic the 2010 target was even before these latest revelations.

Even if the Yucca Mountain site in Nevada were to be built on time, utilities would still have to store nuclear waste on-site until it could be shipped out. Since there is already a backlog of 30,000 tons of nuclear fuel with more being created every year, utilities would have to wait in line before their waste could be shipped to Nevada. For SMUD the soonest that all the fuel could be moved out of Sacramento would be 2024. For other utilities with more waste it would be even longer.

All nuclear utilities currently keep spent nuclear fuel in small covered pools next to the power plants. The water in the pools keeps the fuel cool and absorbs neutrons that can initiate a nuclear chain reaction. Spent fuel pools at nuclear reactors around the country are rapidly running out of space.

There are three alternatives for utilities with limited underwater storage capacity. They can close their reactors, build dry storage facilities next to their power plants or find someone else to take the spent fuel and store it. Besides SMUD, four other utilities have closed large operating nuclear reactors, but none because of spent fuel storage problems.

THE ONE utility that has so far been faced with the prospect of closing a nuclear plant due to a lack of such storage is Northern States Power. The Minnesota utility, which operates two nuclear plants on an island on the upper Mississippi River, would have run out of space in one of its spent fuel pools by 1995. Plans to build an on-site storage facility next to the plants were legally challenged by the Mdewakanton Tribal Council, whose lands were next to the facility, and by local environmental groups. They argued that state law required the state legislature to license any "long-term" nuclear waste facility. A state court found that because no permanent nuclear repository or other long-term storage site existed that the facility should be considered "long-term."

That decision led to a bitter, drawn-out battle last year in the Minnesota Legislature. In the end, the Legislature, by one vote, approved enough storage capacity to allow the plants to run another seven years but only after the utility agreed to spend over half a billion dollars constructing several large-scale wind and biomass energy projects. After that narrow victory, Northern States Power and a handful of other utilities began looking for another place to dump their nuclear waste, preferably somewhere far away from their customers and pesky state legislators.

Recently, these utilities began discussions with the Mescalero Apaches of southern New Mexico about the possibility of building a storage facility on their reservation. The issue has deeply divided the Mescaleros. A January election, in which 58 percent of the Mescaleros voted against going into the nuclear waste business, embarrassed the tribal leadership, which supported the proposal. A second vote was scheduled six weeks later. Using what New Mexico Attorney General Tom Udall called strong-arm tactics, the tribal leadership successfully reversed the initial vote. Since the New Mexico Legislature strongly opposes the facility, the tribe's decision promises to create a confrontation between the issues of Indian sovereignty and the state's responsibility for public health and safety.

Several members of Congress have introduced legislation to authorize the construction of an interim facility to store high-level nuclear waste in Nevada. Leading the charge for sending the waste to Nevada is Louisiana Sen. J. Bennett Johnston, former chairman of the Senate Energy Committee and now ranking minority member. Johnston has been one of the top recipients of campaign contributions from nuclear industry political action committees for the past decade.

Johnston was instrumental in narrowing down this list of potential sites for the high-level nuclear waste repository to Yucca Mountain in Nevada. In 1986 the Reagan administration narrowed the search to three potential sites in Washington, Texas and Nevada. The next year Johnston carried legislation that designated Yucca Mountain as the only site.

THE GENERAL Accounting Office recently reported that during the first 10 years of the program the estimated cost of disposing of high-level nuclear waste increased from $20 billion to $30 billion. Part of the reason for the increase has been the high cost of maintaining an infrastructure of contractors and facilities to support the scientific and technical activities. But mainly it is due to the increased complexity and the expanding timetable of the project. So far, the utilities have contributed about $6 billion to the fund. SMUD's contribution has been about $40 million.

The GAO called for an independent review of the disposal program. Among the issues recommended for study are "the interim storage of waste, the adequacy of the program's funding, the management and organization of the program and repository project and the approach to regulating the program." But with only two years left before he retires, Johnston isn't interested in studies. He has a new bill that would authorize the construction of an interim storage facility at Yucca Mountain at "the earliest practicable date", along with the rail lines needed to transport the spent fuel to Nevada.

Spending huge sums on building an infrastructure and then shipping nuclear waste to Yucca Mountain would virtually foreclose serious consideration of other methods of managing nuclear waste. This could end up being a very costly mistake if Yucca Mountain proves to be a geologically unsuitable site.

The costs of shipping waste from 70 different nuclear plants crisscrossing 43 states, to an inappropriate interim storage facility pales in comparison with another proposal for Yucca Mountain. Some nuclear utilities are calling for the retrievable placement of waste in the repository only for the first 100 years. The idea is that if problems develop at the site, the aging canisters full of nuclear waste can be lifted out from the 1,000-foot-deep caverns and stored above ground. How much it would cost to build the repository, fill it up with nuclear waste and then empty it later on is anybody's guess.

No other country in the world has established a site for permanent disposal. Besides the United States, only Germany has narrowed down its options to one site.

In 1982 Britain approved a 50-year storage plan and is currently exploring several options with the earliest target for waste burial in 2030. France is studying three sites with a final one not to be selected until 2006 and opening up possibly 10 years later. The Netherlands has approved interim storage for 50 to 100 years with the year 2040 being the earliest date it would have a repository. Japan is conducting several studies and is building an underground research facility with China. They don't expect to bury waste until at least 2020.

DEEP GEOLOGIC burial has become, almost by default, the favored option for disposing of high-level nuclear waste. Other ideas for waste disposal – such as burying it under Antarctic ice, injecting it in the seabed or shooting it into outer space – have been rejected as too risky.

Reprocessing waste by separating out plutonium and uranium for reuse was once thought to be the preferred method of handling spent fuel. But in 1977, President Carter cancelled U.S. efforts to reprocess fuel from civilian nuclear reactors because of concern about the proliferation of nuclear weapons materials. While the Reagan administration rescinded the ban on reprocessing, the United States nuclear industry has shown little interest in its revival because of the economics. The separated plutonium and uranium are far more costly than the uranium obtained from mining. In fact, plutonium is piling up at European reprocessing facilities because of the lack of a market, creating pressure to close them.

Reprocessing does not eliminate radioactive waste and the need for waste storage. While reprocessing reduces the most potent component of waste it increases its overall quantity nearly tenfold.

Transmutation of radioactive waste, like turning lead into gold, may offer a technical solution in the long run. Researchers at the Los Alamos National Laboratory in New Mexico and at the European Laboratory for Particle Physics in Geneva propose shooting a proton beam into radioactive atoms, thereby converting them into less long-lived isotopes or even non-radioactive elements. Currently, no accelerator can deliver a beam of the required intensity. However, funding for a prototype could come from the Department of Energy or the European Union. Even if the technical challenges and costs of transmutation could be overcome, there would still be some remaining wastes that would need to be managed.

For the time being high-level nuclear waste will have to be managed at nuclear power plants. That it can be done safely, as SMUD is doing, should give the federal government time to commission an independent, comprehensive evaluation of long-term nuclear waste policies and programs. Such a review could save U.S. taxpayers billions of dollars and prevent us from passing on to future generations irreversible and regrettable decisions.

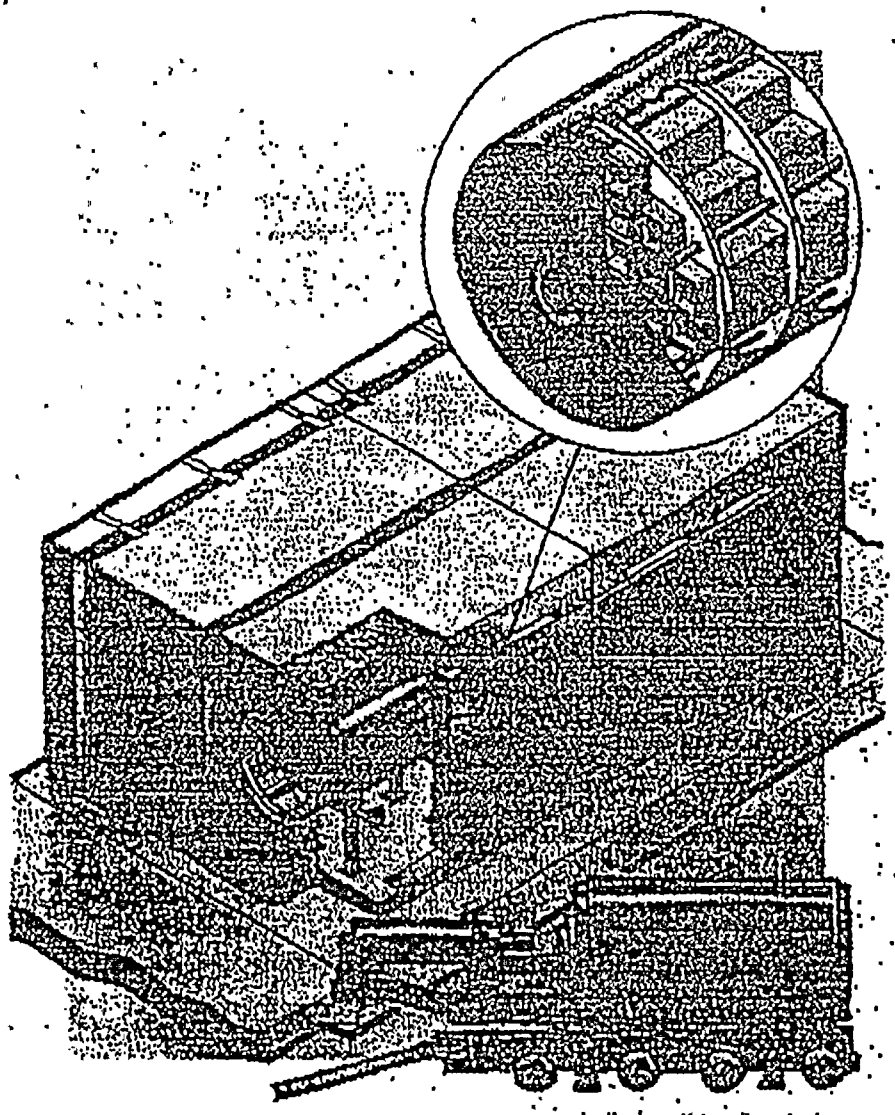

Special to The Bee/Norman Hines

Canisters containing high-level nuclear waste will be stored, for at least the next 25 years, in dry storage vaults that will look like this at Rancho Seco. Upper r.: a canister with containers for spent fuel rods. At bottom: a transporter that carries the canister from the cooling pond to the storage vault.

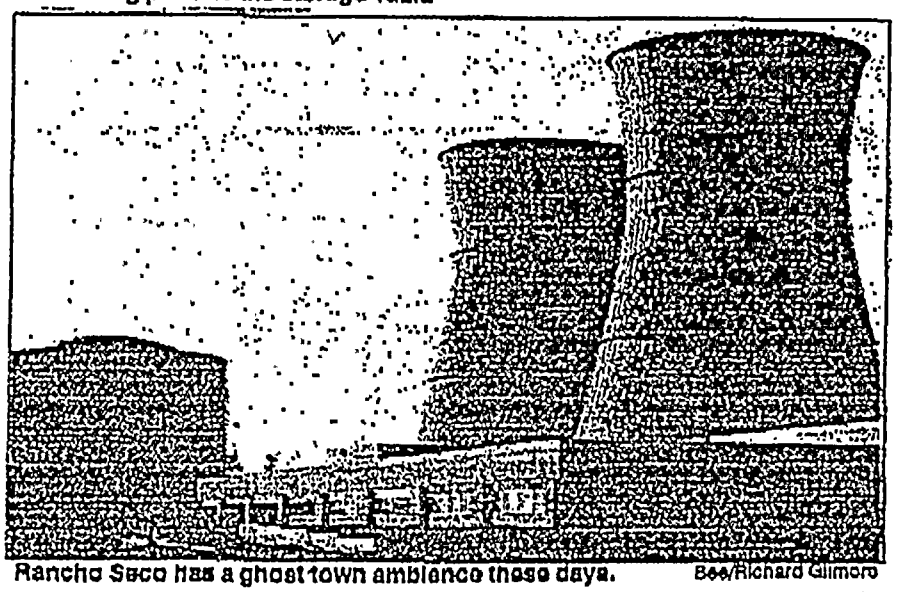

Rancho Seco has a ghost town ambience these days. Bee/Richard Gilmore

Attachment C

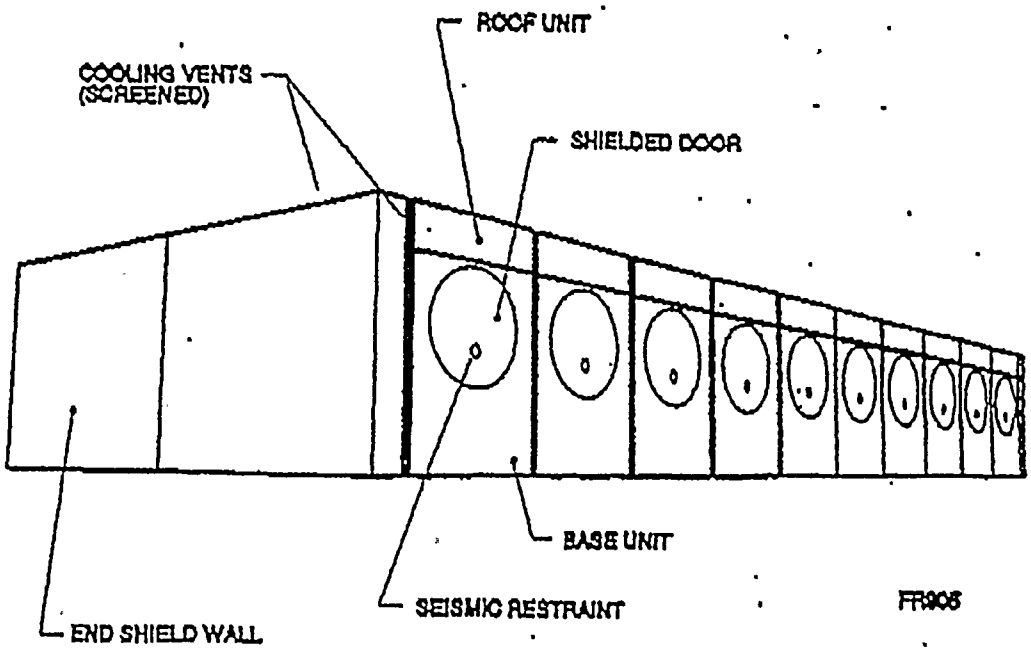

Figure 1-3

Overview of the Horizontal Storage Module

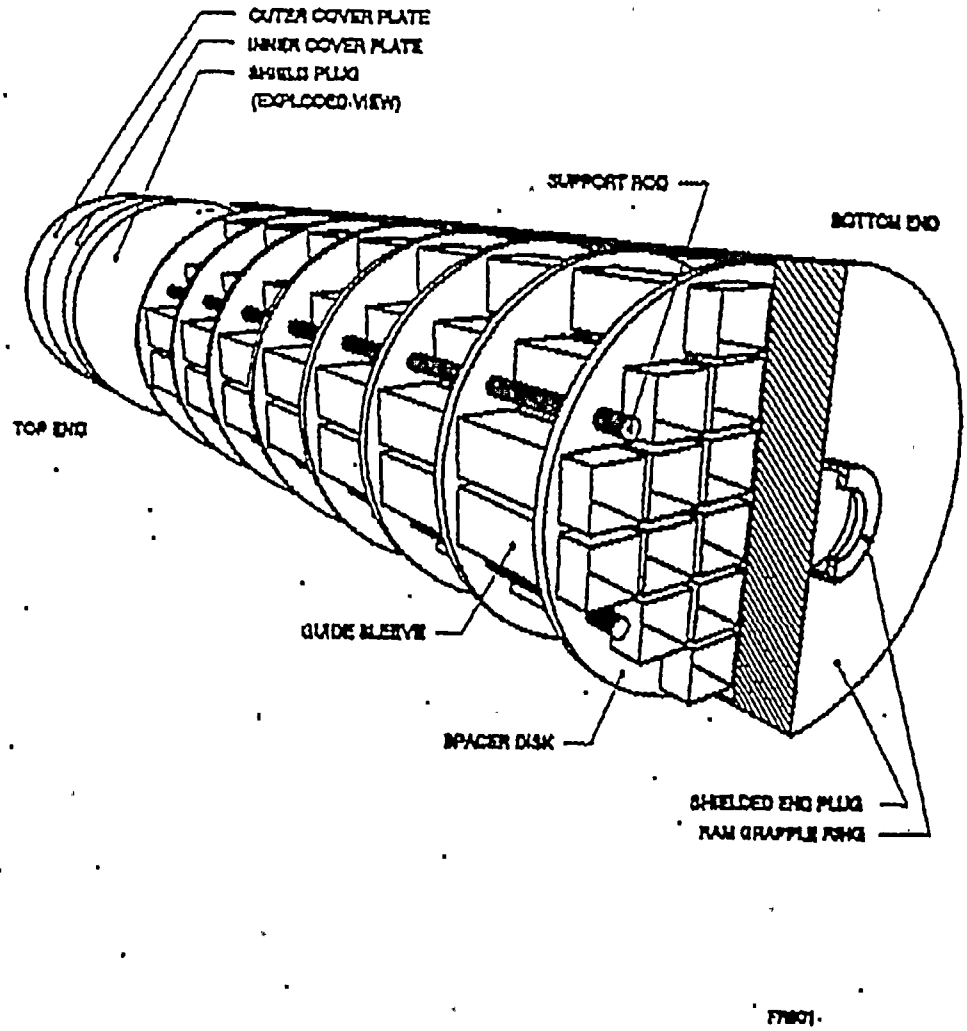

Figure 1-4

Overview of the Dry Shielded Canister

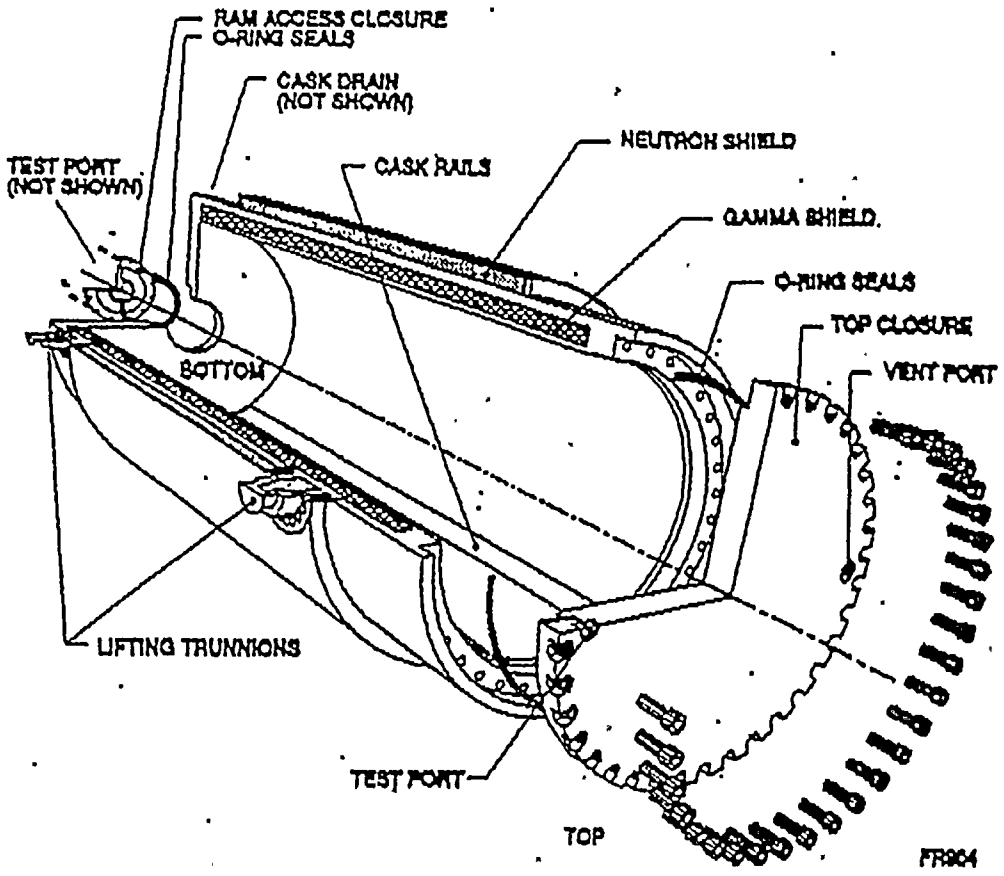

Figure 1-5

Overview of the NUHOMS®-MP187 Cask

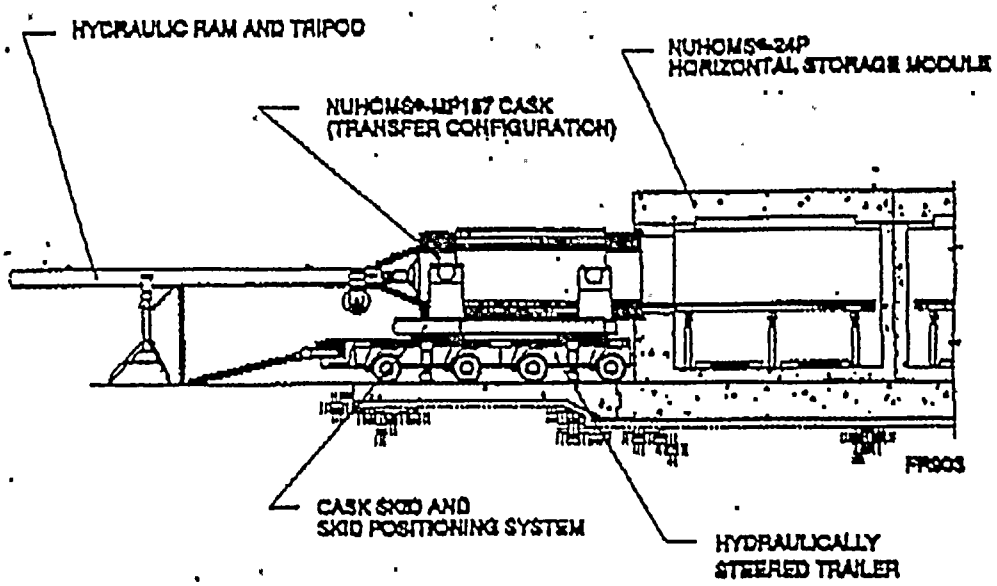

Figure 1-7

General Arrangement of the Transfer System