August 27, 1992

Docket No. 50-400

Mr. R. A. Watson
Senior Vice President
Nuclear Generation
Carolina Power & Light Company
P.O. Box 1551
Raleigh, North Carolina 27602

Dear Mr. Watson:

SUBJECT: ACCIDENT SEQUENCE PRECURSOR PROGRAM EVENT ANALYSIS REGARDING THE SHEARON HARRIS NUCLEAR POWER PLANT, UNIT 1, HIGH HEAD SAFETY INJECTION UNAVAILABILITY

During a meeting held on August 20, 1992, between the U.S. Nuclear Regulatory Commission (NRC) and Carolina Power & Light Company (CP&L), CP&L requested a meeting regarding NRC analysis of an April 3, 1991, event at Shearon Harris Power Nuclear Plant, Unit 1. This event involved the unavailability of high head safety injection due to damage to the alternate minimum flow system. In response to this request, we have enclosed NUREG/CR-4674, "Precursors to Potential Severe Core Damage Accidents: 1990 A Status Report," (Enclosure 1) which provides background information on the Accident Sequence Precursor (ASP) Program. Also enclosed for your information (Enclosure 2) is the NRC's preliminary ASP Program event analysis performed for the April 3, 1991, event, as well as Licensee Event Report 91-08 submitted by CP&L which was the basis of the analysis.

If you have any questions regarding the enclosures or if you still feel a technical interchange would be beneficial to discuss the material subsequent to your review, please advise your project manager, Ngoc Le, at (301) 504-1458.

Sincerely,
Orignal signed by:
Elinor G. Adensam for:
Gus C. Lainas, Assistant Director
for Region II Reactor
Division of Reactor Projects - I/II
Office of Nuclear Reactor Regulation

Enclosures:
As stated

cc w/o Enclosure 1:
See next page *See previous concurrence

OFFICE	LA:PD21:DRPE	PE:PD21:DRPE	PM:PD21:DRPE	D:PD21:DRPE
NAME	PAnderson	MWebb	NLe	EAdensam
DATE	8/28/92	8/28/92	8/28/92	8/28/92

OFFICE	AD:RII	*DREP
NAME	GLainas	FCongel
DATE	8/27/92	8/27/92

DF01

Mr. R. A. Watson
Carolina Power & Light Company

Shearon Harris Nuclear Power Plant,
Unit 1

cc:

Mr. H. Ray Starling
Manager - Legal Department
Carolina Power & Light Company
P. O. Box 1551
Raleigh, North Carolina 27602

Resident Inspector/Harris NPS
c/o U. S. Nuclear Regulatory Commission
Route 1, Box 315B
New Hill, North Carolina 27562

Mr. Gerald E. Vaughn, Vice President
Harris Nuclear Project
Harris Nuclear Plant
P. O. Box 165
New Hill, North Carolina 27562

Mr. H. A. Cole
Special Deputy Attorney General
State of North Carolina
P. O. Box 629
Raleigh, North Carolina 27602

Public Service Commission
State of South Carolina
P.O. Drawer 11649
Columbia, South Carolina 29211

Regional Administrator, Region II
U.S. Nuclear Regulatory Commission
101 Marietta Street
Suite 2900
Atlanta, Georgia 30323

Mr. C. S. Hinnant
Plant General Manager
Harris Nuclear Plant
P. O. Box 165
New Hill, North Carolina 27562

Mr. Dayne H. Brown, Director
Division of Radiation Protection
N. C. Department of Environmental,
Commerce & Natural Resources
P. O. Box 27687
Raleigh, North Carolina 27611-7687

Mr. R. B. Starkey
Vice President
Nuclear Services Department
Carolina Power & Light Company
P. O. Box 1551
Raleigh, North Carolina 27602

ACCIDENT SEQUENCE PRECURSOR PROGRAM EVENT ANALYSIS

LER No.:	400/91-008
Event Description:	HPI unavailability for one refueling cycle because of inoperable alternate mini-flow lines
Date of Event:	April 3, 1991
Plant:	Harris 1

Summary

Harris is equipped with three charging/safety injection pumps (CSIPs) which provide charging and seal flow during normal operation and provide high head safety injection during accidents. Each pump is provided with a normal minimum flow path and an alternate minimum flow path for pump protection. During normal operations, the minimum flow path is via the seal water heat exchanger back to the pump suction. During safety injection operation, this path is isolated and two alternate paths via relief valves to the reactor water storage tank (RWST) are aligned. Tests conducted during a refueling outage revealed that both relief valves were failed, as well as associated piping. Had high head safety injection been demanded during the operating cycle, sufficient flow would have been diverted via the alternate miniflow system to fail the injection function. Under some circumstances, pump runout and failure could also have resulted.

The conditional core damage probability estimated for this event is 6.3×10^{-3}. The relative significance of the event, compared to other postulated events at Harris 1, is shown below.

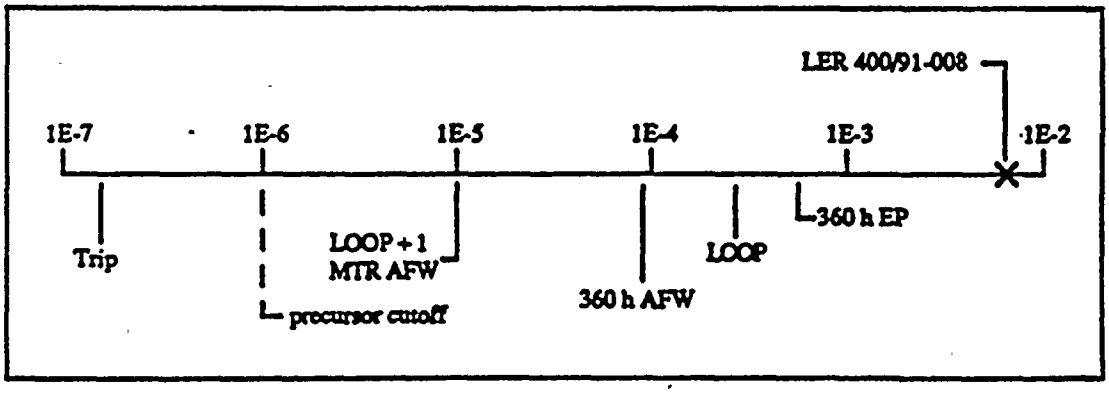

Event Description

The CSIPs provide charging and reactor coolant pump seal injection flow during normal operation at Harris. Under accident conditions the CSIPs act as high head safety injection (HHSI) pumps, providing high-pressure makeup to the reactor coolant system (RCS). While acting as charging pumps, the CSIPs are protected against deadhead operation by normal minimum flow lines which are capable of relieving 60 gpm back through the seal water heat exchanger to the pump suction.

On a safety injection, these lines are automatically isolated and two alternate minimum flow lines are aligned. Relief valves 1CS-754 and 1CS-755 are located respectively in these lines. They are designed to lift at approximately 2300 psig to recirculate water back to the refueling water storage tank.

During outage testing, these relief valves were both found to be damaged, along with associated piping. Relief valve 1CS-755 failed to hold any pressure during testing and 1CS-754 lifted at 1100 psig. Piping upstream of valve 1CS-755 was found to be cracked, this piping failed during testing. In addition, a weld indication was identified upstream of 1CS-744. Utility investigation determined that the damage was a result of water-hammer effects. Gas accumulations, believed to be air, were thought to have developed in the alternate miniflow lines during previous testing or maintenance. Displacement of this air during earlier system testing apparently resulted in water-hammer and damage to the piping and valves.

The utility reported that, had HHSI been demanded, the failures in the alternate miniflow lines would have diverted sufficient flow that the system would not have been able to perform its safety function. It was also reported that, in the event of a large-break loss-of-coolant accident (LOCA), the additional flow through the alternate miniflow system would have resulted in CSIP runout.

Event Related Information

A drawing of the Harris charging/SI system is shown in Fig. 1.

EOP-FRP-C.2, "Response to Degraded Core Cooling," provides instructions for RCS depressurization and use of the accumulators and low-pressure injection pumps if the high-pressure system is unavailable. This alternate mitigation method would only be effective if secondary side cooling was available and if the RCS could be depressurized prior to core uncovery. The ASP accident sequence models do not currently address the potential use secondary side depressurization and low-pressure injection for core cooling success.

ASP Modeling Approach and Assumptions

This event was modeled as a 1-yr unavailability of the CSIPs for safety injection. The failures were assumed to be non-recoverable. Since the procedures require safety injection be initiated prior to opening the PORVs for feed and bleed, the failed relief valves would also have resulted in a failure of that function as well as safety injection in the event of a LOCA.

Two sensitivity analyses were also performed. The first involved the use of SG depressurization and the LPI system for low-pressure injection for sequences in which secondary side cooling was available. A failure probability of 0.12 was assumed for this alternate core cooling method. The second sensitivity analysis addressed the possibility that multiple CSIPs would be effective in providing high-pressure makeup.

Analysis Results

The conditional core damage probability associated with this event was estimated to be 6.3×10^{-3}. The dominant core-damage sequence, highlighted on the following event tree, involves a LOCA, reactor trip and auxiliary feedwater success, and failure of high-pressure injection. If SG depressurization and LPI is assumed to provide successful core cooling, the conditional probability for the event is reduced to 7.8×10^{-4}, still a significant event.

It is possible that use of multiple charging pumps would provide adequate injection flow even with the failed relief valves, but no information is available which would permit this to be confirmed. If this were the case, the conditional probability estimated for the event would be $\sim 1.9 \times 10^{-4}$ without the use of SG depressurization, and 2.3×10^{-5} if SG depressurization and LPI were effective in providing core cooling.

Note that sequences associated with degraded system operation, such as the use of the three pumps for high-pressure injection success, are not addressed in normal PRAs, where models are based on the proper operation of a minimum set of components required to satisfy a systems success criteria.

PRELIMINARY

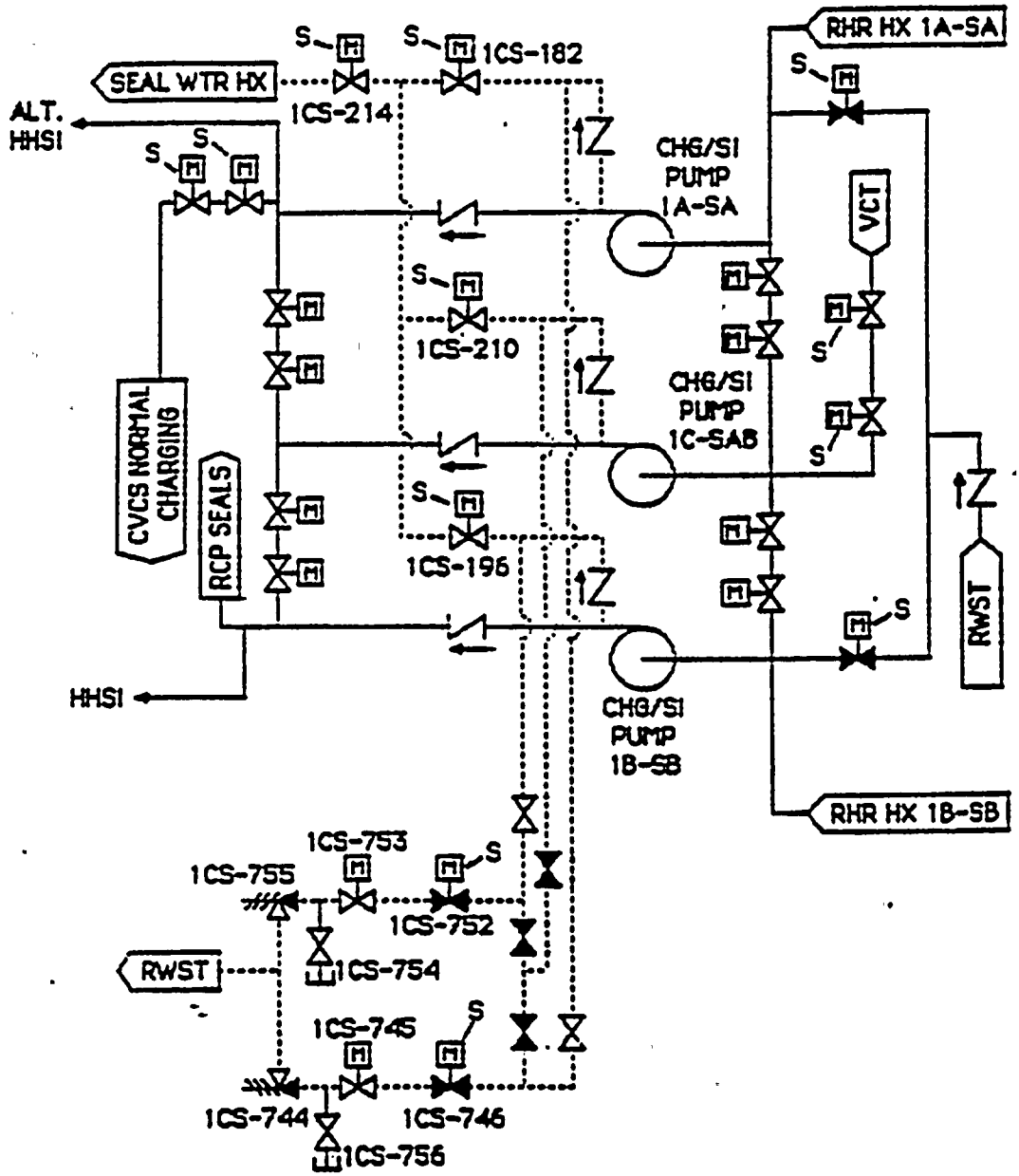

Fig. 1. Harris 1 charging/safety injection system

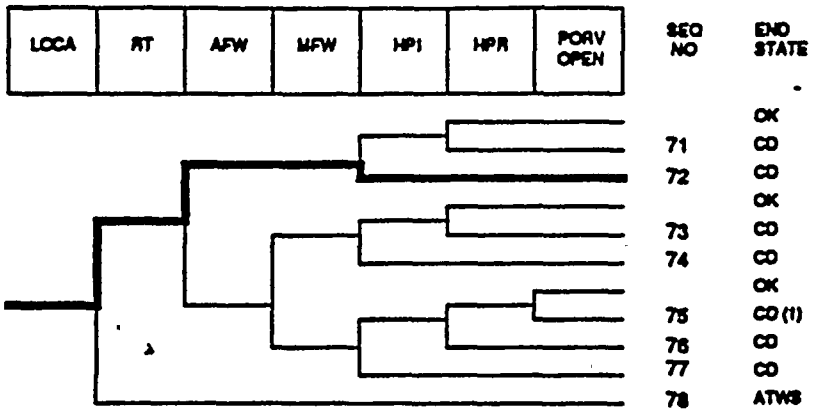

(1) OK for Class D

Dominant Core Damage Sequence for LER 400/91-008

CONDITIONAL CORE DAMAGE PROBABILITY CALCULATIONS

Event Identifier: 400/91-008
Event Description: HPI unavailable due to inoperable mini-flow lines
Event Date: 04/03/91
Plant: Harris 1

UNAVAILABILITY, DURATION= 6132

NON-RECOVERABLE INITIATING EVENT PROBABILITIES

TRANS	3.4E+00
LOOP	5.3E-02
LOCA	6.3E-03

SEQUENCE CONDITIONAL PROBABILITY SUMS

End State/Initiator	Probability
CD	
TRANS	1.5E-05
LOOP	1.8E-05
LOCA	6.3E-03
Total	6.3E-03
ATWS	
TRANS	0.0E+00
LOOP	0.0E+00
LOCA	0.0E+00
Total	0.0E+00

SEQUENCE CONDITIONAL PROBABILITIES (PROBABILITY ORDER)

	Sequence	End State	Prob	N Rec**
72	loca -rt -afw HPI	CD	6.3E-03	4.3E-01

** non-recovery credit for edited case

SEQUENCE CONDITIONAL PROBABILITIES (SEQUENCE ORDER)

	Sequence	End State	Prob	N Rec**
72	loca -rt -afw HPI	CD	6.3E-03	4.3E-01

** non-recovery credit for edited case

Note: For unavailabilities, conditional probability values are differential values which reflect the added risk due to failures associated with an event. Parenthetical values indicate a reduction in risk compared to a similar period without the existing failures.

SEQUENCE MODEL: c:\asp\1989\pwrbeeal.cmp
BRANCH MODEL: c:\asp\1989\harris.sll
PROBABILITY FILE: c:\asp\1989\pwr_bsll.pro

No Recovery Limit

Event Identifier: 400/91-008

BRANCH FREQUENCIES/PROBABILITIES

Branch	System	Non-Recov	Opr Fail
trans	5.5E-04	1.0E+00	
loop	1.6E-05	5.3E-01	
loca	2.4E-06	4.2E-01	
rt	2.8E-04	1.2E-01	
rt/loop	0.0E+00	1.0E+00	
emerg.power	2.9E-03	8.0E-01	
afw	3.8E-04	2.6E-01	
afw/emerg.power	5.0E-02	3.4E-01	
mfw	1.0E+00	7.0E-02	1.0E-03
porv.or.srv.chall	4.0E-02	1.0E+00	
porv.or.srv.reseat	2.0E-02	1.1E-02	
porv.or.srv.reseat/emerg.power	2.0E-02	1.0E+00	
seal.loca	2.7E-01	1.0E+00	
ep.rec(sl)	5.7E-01	1.0E+00	
ep.rec	7.0E-02	1.0E+00	
HPI	3.0E-04 > 1.0E+00	8.4E-01 > 1.0E+00	
Branch Model: 1.OF.3			
Train 1 Cond Prob:	1.0E-02 > Failed		
Train 2 Cond Prob:	1.0E-01 > Failed		
Train 3 Cond Prob:	3.0E-01 > Failed		
HPI(F/B)	3.0E-04 > 1.0E+00	8.4E-01 > 1.0E+00	1.0E-02
Branch Model: 1.OF.3+opr			
Train 1 Cond Prob:	1.0E-02 > Failed		
Train 2 Cond Prob:	1.0E-01 > Failed		
Train 3 Cond Prob:	3.0E-01 > Failed		
hpr/-hpi	1.5E-04	1.0E+00	1.0E-03
porv.open	1.0E-02	1.0E+00	4.0E-04

* branch model file
** forced

Minarick
03-15-1992
18:03:31

Event Identifier: 400/91-008