Union of Concerned Scientists
ucsusa.org Two Brattle Square, Cambridge, MA 02138-3780 t 617.547.5552 f 617.864.9405
1825 K Street NW, Suite 800, Washington, DC 20006-1232 t 202.223.6133 f 202.223.6162
2397 Shattuck Avenue, Suite 203, Berkeley, CA 94704-1567 t 510.843.1872 f 510.843.3785
One North LaSalle Street, Suite 1904, Chicago, IL 60602-4064 t 312.578.1750 f 312.578.1751

July 26, 2017

Cynthia Pederson, Regional Administrator
U.S. Nuclear Regulatory Commission Region III
2443 Warrenville Road Suite 210
Lisle, IL 60532-4352

SUBJECT: Quad Cities Unit 2 High Pressure Coolant Injection System

Dear Ms. Pederson:

By letter dated July 13, 2017 (ADAMS ML17194A817), the licensee for the Quad Cities Nuclear Power Station submitted Licensee Event Report (LER) 265/2017-001 about the failure of the minimum flow valve for the High Pressure Coolant Injection (HPCI) system on Unit 2 to open. Information contained in this letter as well as information missing from this letter leaves me unable to determine whether I should use the agency's allegations process, its 2.206 petition process for a 50.9 violation, or its more informal letter and response process. So, I will describe my concerns and rely on your staff to determine which process(es) most effectively handle this matter.

Contradictions

The licensee made two seemingly contradictory statements in the LER:

1. "Given the impact on the HPCI system, this report is submitted for Unit 2 in accordance with the requirements of 10 CFR 50.73(a)(2)(v)(D), which requires the **reporting of any event or condition that could have prevented the fulfillment of the safety function** of structures or systems that are needed to mitigate the consequences of an accident." [boldfacing added for emphasis]

2. "The engineering analysis that was performed demonstrated this event did not constitute a Safety System Functional Failure (SSFF). (Reference NEI 99-02, Revision 7, Regulatory Assessment Performance Indicator Guideline, Section 2.2, "Mitigating Systems Cornerstone, Safety System Functional Failures, Clarifying Notes, Engineering Analyses.") As such, this event will not be reported in the NRC Performance Indicator (Pl) for SSFF since an engineering analysis was performed which **determined that the system was capable of performing its safety function during this event**." [boldfacing added for emphasis]

When the HPCI minimum flow valve failed to open, and then failed to remain open after it was manually opened, the operators declared the HPCI system inoperable. The operators notified the NRC about the HPCI system problem (Event No. 52758, May 16, 2017).

Declaring the HPCI system inoperable and reporting the problem to the NRC is both understandable and consistent with standard industry practice. At that time, the cause of the minimum flow valve's failure and its effect on HPCI system performance had not been determined.

Subsequent engineering analysis determined that the minimum flow valve's failure would not have prevented the HPCI system from performing it safety function. Yet, the licensee submitted an LER because the event could have prevented the HPCI system from performing its safety function.

The standard industry practice in such cases is to retract the initial event notification. For example, the May 16, 2017, event notifications which contained this licensee's initial notification also contained a retracted by the Fermi licensee (Event No. 52651, May 15, 2017). The Fermi licensee informed the NRC that subsequent analysis found that the matter it had reported could not have caused loss of the safety function, that it was retracting the notification, and that is was not submitting a follow-up LER.

It is uncertain why the Quad Cities departed from standard industry practice by submitting an LER to the NRC about an event it determined would not have affected a safety function on purported grounds that the event could have affected a safety function from being performed.

Risk Deflation

The LER stated "The **plant Probabilistic Risk Assessment (PRA) …does not include it** [the operation and malfunction of the minimum flow valve] in the model; hence, the failure of the valve to open did not contribute to an increase in risk." [boldfacing added for emphasis]

Had the LER explicitly justified excluding the HPCI minimum flow valve from its PRA model or referenced some prior justification, that would be one thing. But it's an entirely different matter to state that the valve's failure did not increase risk based on a risk model that does not consider the valve.

The NRC explicitly included the minimum flow valve in its "High Pressure Coolant Injection (HPCI) System Risk-Based Inspection Guide for Quad-Cities Station, Units 1 and 2" (NUREG/CR-5934, January 1993, ADAMS Public Legacy Accession No. 9303190108). Table 4-1 from this NRC risk-based inspection guide explicitly included the HPCI minimum flow valve among components whose malfunction had medium risk importance.

Table 4-1 HPCI PRA-based Failure Summary

COMPONENTS[1]

High Risk Importance[2]

- Pump or Turbine Fails to Start or Run
- System Unavailable Due to Test or Maintenance Activities
- Turbine Steam Inlet Valve 2301-3 Fails to Open
- Pump Discharge Inboard Isolation Valve 2301-8 Fails to Open

Medium Risk Importance[2]

- CST/Suppression Pool Switchover Logic Fails
- Suppression Pool Suction Isolation Valves 2301-35,36 Fail to Open
- Normally Open Pump Discharge Valve 2301-9 Fails Closed or is Plugged
- Minimum Flow Valve 2301-14 Fails to Open, Given Delayed Activation of Pump Discharge Valve, 2301-8.

Table 6-1 from this NRC risk-based inspection guide listed HPCI component failures based on operating experience:

Table 6-1 HPCI Failure Summary

Failure Number	Description	Total Failures*	HPCI Failure Contribution (%)
1	Pump or Turbine Fails to Start or Run	64	40
2	System Unavailable Due to Test or Maintenance Activities	43	27
3	False High Steam Line Differential Pressure Isolation Signal	10	6
4	Turbine Steam Inlet Valve (F001) Fails to Open	8	5
5	Pump Discharge Valve (F006) Fails to Open	8	5
6	Systems Interactions Fail HPCI	3	2
7	System Actuation Logic Fails	4	3
8	False High Area Temperature Isolation Signal	3	2
9	False Low Suction Pressure Trip	2	1
10	False High Turbine Exhaust Signal	1	<1
11	Normally Open Turbine Exhaust Valve Fails Closed	1	<1
12	CST/Suppression Pool Switchover Logic Fails	1	<1
13	Suppression Pool Suction Valve (F042) Fails to Open	6	4
14	Minimum Flow Valve (F012) Fails to Open	5	3

The NRC noted five failures of HPCI minimum flow valves to open as well as problems with the HPCI pump discharge valve opening. There likely have been additional failures over the ensuing two decades.

Is it acceptable for a licensee to conclude that the failure of a safety system component will not result in increased risk based on the unjustified exclusion of the component from its PRA? If not, will this licensee get away with doing so?

Arbitrarily Shortened Mission Time

The LER stated "…the HPCI System remained capable of performing its intended design/safety function and **would not have hindered the system from fulfilling any required safety function** or injection over the required 10 minute mission time." [boldfacing added for emphasis]

The 10-minute mission time seems unnaturally short. Figure 6.3-28B from the Quad Cities UFSAR (Rev. 7, January 2003) shows HPCI operating for at least 700 seconds.

The aforementioned NRC risk-based inspection guide for the HPCI systems at Quad Cities stated in Section 3.4 that "The continued operability of HPCI during an ATWS event is critical." The time span for an ATWS event requiring HPCI's continued operability is not limited to 10 minutes.

Similarly, HPCI's use is explicitly relied upon in operating procedures for safety functions heyond mnakeup following a small or medium sized loss of coolant accident. The reactor operator and senior reactor operator examinations available in ADAMS for Quad Cities's candidates include HPCI uses such level control and pressure control during design basis transients, like closure of the main steam isolation valves—all evolutions easily lasting longer than 10 minutes.

Is it acceptable for a licensee to consider only one short-duration design basis event and exclude all longer duration events when assessing safety impacts? If not, will this licensee get away with doing so?

Process Selection Dilemma
The perplexing LER makes it hard to determine whether an allegation, enforcement action petition, or informal response is the appropriate NRC process to invoke.

The licensee based its risk assessment on a PRA model that excluded the safety component that failed without any apparent justification.

The licensee based its safety consequences evaluation on an arbitrarily shortened mission time for the HPCI system.

If it's permissible to perform such shoddy work, then the only remaining issue is why the licensee reported that a safety function could be impaired after determining that the function would not be impaired.

On the other hand, if such shoddy work is impermissible, the matter involves the potential violation of 10 CFR 50.9 and its requirements that submittals by licensees to the NRC be complete and accurate.

I suspect that proper homework could yield a risk assessment and safety consequence evaluation that properly concluded this event had minor significance. For example, the Pilgrim licensee recently completed such homework (ML17191A787) for an NRC finding about low emergency diesel generator gearbox lubricating oil inventory.

The conclusion is only as sound as its foundation. The Pilgrim licensee provided a very robust foundation for its conclusion. The Quad Cities licensee provided a sketchy, shaky foundation for its guess.

The NRC resident inspectors routinely follow-up on LERs. If the NRC resident inspectors probe the issues raised in this letter and document their findings and conclusions in an inspection report, that process will solve my selection dilemma.

Sincerely,

David Lochbaum
Director, Nuclear Safety Project
Union of Concerned Scientists
PO Box 15316
Chattanooga, TN 37415

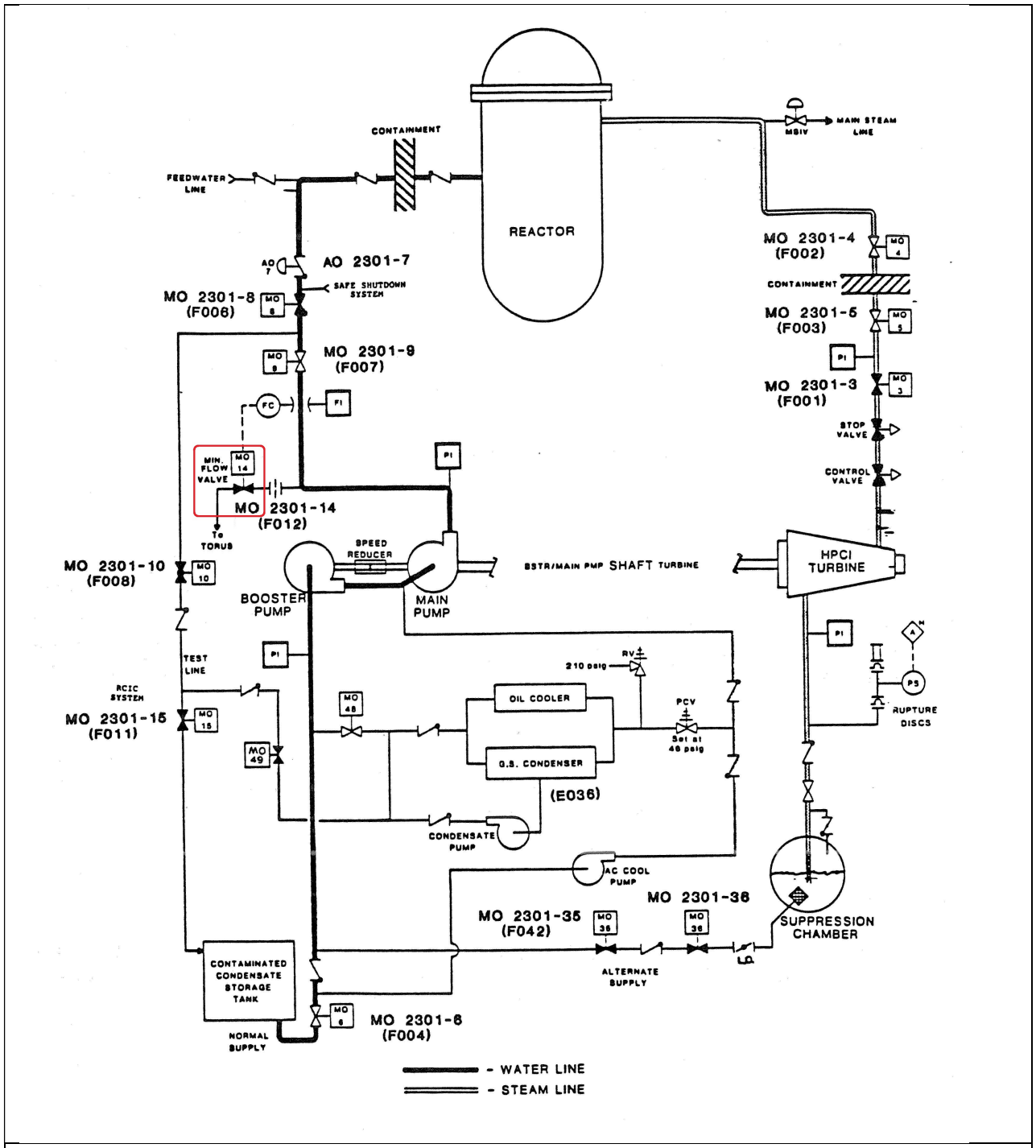

The drawing shows the HPCI system in standby mode. The things looking like black bowties are normally-closed valves. The white bowties represent normally-open valves. On startup, three valves open to admit steam to the HPCI turbine on the right and one valve (MO 2301-8) opens to allow the HPCI pump on the left to supply water to the reactor vessel. To protect the HPCI pump from damage caused by overheating, the minimum flow valve MO 2301-14 opens when flow is less than 1,200 gallons per minute. Once MO 2301-8 opens enough, MO 2301-14 automatically closes.

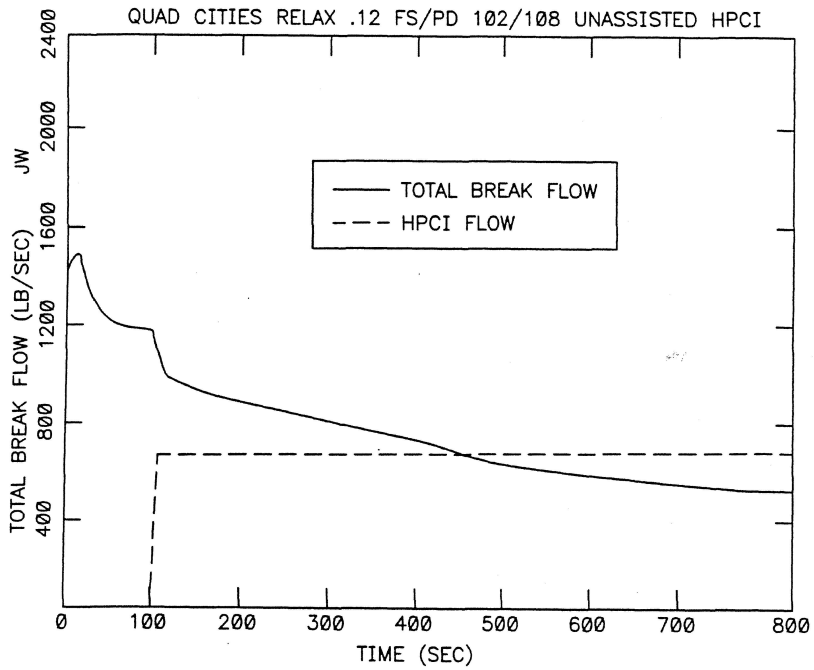

NOTE: RESULTS ARE HISTORICAL. THESE RESULTS ARE NOT REQUIRED FOR CURRENT LICENSING BASIS UNDER 10CFR50.46 AND 10CFR50 APPENDIX K, SINGLE FAILURE REQUIREMENTS.

SOURCE: REFERENCES 46, 47

QUAD CITIES STATION UNITS 1 & 2

TOTAL BREAK FLOW AND HPCI FLOW VS. TIME AFTER BREAT AT 2511 MWt (0.12ft^2 PUMP DISCHARGE BREAK, UNASSISTED HPCI, 102% POWER, 108% CORE FLOW FOR ATRIUM-9B FUEL)

FIGURE 6.3-28B

REVISION 7, JANUARY 2003