ENCLOSURE

U.S. NUCLEAR REGULATORY COMMISSION
REGION IV

Docket Nos.:	50-528; 50-529; 50-530
License Nos.:	NPF-41; NPF-51; NPF-74
Report No.:	50-528/98-14; 50-529/98-14; 50-530/98-14
Licensee:	Arizona Public Service Company
Facility:	Palo Verde Nuclear Generating Station, Units 1, 2, and 3
Location:	5951 S. Wintersburg Road Tonopah, Arizona
Dates:	May 26 through July 21, 1998
Inspectors:	R. Bywater, Reactor Inspector, Engineering Branch N. Salgado, Resident Inspector
Approved By:	Thomas F. Stetka, Acting Chief, Engineering Branch Division of Reactor Safety

ATTACHMENTS:

Attachment 1:	Supplemental Information
Attachment 2:	Simplified HPSI Flow Diagram
Attachment 3:	Degraded HPSI Flow Profile

EXECUTIVE SUMMARY

Palo Verde Nuclear Generating Station, Units 1, 2, and 3
NRC Inspection Report 50-528/98-14; 50-529/98-14; 50-530/98-14

This special inspection was conducted to review the safety and regulatory implications of excessive high-pressure safety injection pump discharge check valve reverse leakage for Units 1 and 2. The licensee identified and reported these conditions to the NRC in accordance with 10 CFR Part 50.72 on May 14 and 15, 1998. The onsite portion of the inspection was conducted during the weeks of May 25 and June 8, 1998. Additional in-office inspection was conducted through July 21, 1998. The inspection also assessed the licensee's evaluation of the degraded conditions.

Operations

- Two examples of an apparent violation of Technical Specification 3.5.2 were identified for inoperability of the Unit 1 Train "B" high-pressure safety injection flow path for approximately 6 years and the Unit 2 Train "A" high-pressure safety injection flow path for approximately 5 years (Sections E1.1.b.2 and E1.1.b.4).

- Two examples of an apparent violation of Technical Specification 6.8.1 were identified for inadequate logkeeping practices. Abnormal conditions were not recorded in the Unit 2 control room logs when an unexpected safety injection tank level decrease occurred on October 10 and 28, 1997 (Section E1.1.b.1).

- Two examples of an apparent violation of 10 CFR Part 50, Appendix B, Criterion XVI, were identified for not identifying and correcting excessive reverse flow through Valve 2PSIB-V405 following two Unit 2 safety injection tank level decrease events on October 10 and 28, 1997 (Section E1.1.b.1).

- Units' 1 and 2 log entries on May 13 and 14, respectively, did not address operability of the opposite-train high-pressure safety injection flow path when operability of Valves 1PSIA-V404 and 2PSIB-V405 was in question (Section O1.1).

- One example of an apparent violation of Technical Specification 3.0.3 was identified for not initiating actions within 1 hour, to place Unit 1 in a mode in which Technical Specification 3.5.2 did not apply when the Train "A" high-pressure safety injection system was declared inoperable because of a problem with Valve 1PSIA-V404 (Section O1.1).

- A second and third example of an apparent violation of Technical Specification 3.0.3 were identified for performing online maintenance on the Unit 1 Train "A" and Unit 2 Train "B" high-pressure safety injection systems without isolation from the opposite train, in excess of 7 hours, while the associated high-pressure safety injection pump discharge check valves were inoperable (Section E1.2).

- The licensee's investigation report was objective and provided a candid self-assessment of its performance; however, it did not evaluate inspector-identified issues in the areas of operations or online maintenance (Section E8.1).

Maintenance

- A third example of an apparent violation of 10 CFR Part 50, Appendix B, Criterion XVI, was identified. On April 9, 1998, the licensee missed an opportunity to correct the inoperable condition of Valve 1PSIA-V404 when a personnel error was made during maintenance, resulting in the valve being reassembled incorrectly and the excessive reverse leakage not being corrected (Section E1.1.b.2).

Engineering

- A fourth and fifth example of an apparent violation of 10 CFR Part 50, Appendix B, Criterion XVI, were identified for inadequate corrective actions in the development of maintenance and testing procedures following operating experience assessments of NRC Information Notices 88-70 and 89-62 (Section E1.4).

Report Details

Event Synopsis

This event involved excessive reverse flow through high-pressure safety injection (HPSI) pump discharge check valves in Units 1 and 2 caused by the incorrect assembly of the check valves. The incorrect assembly of the check valves prevented the valves from properly seating during reverse flow conditions. Therefore, the reverse leakage caused by the improper seating valve, caused reduced HPSI injection flow.

A simplified diagram of the HPSI system is depicted in Attachment 2. The HPSI system for each unit is comprised of two trains, "A" and "B," and each train has a pump, which takes suction from either the refueling water tank (RWT) or the containment recirculation sump. The discharge of each pump passes through a check valve, designated xPSIA-V404 for the Train "A" valve (where 'x' is the unit designator) and xPSIB-V405 for the Train "B" valve. The discharge from each pump is then separated into four cold-leg injection lines, one for each of the cold legs of the reactor coolant system (RCS), and a hot-leg injection line. Each cold-leg injection line contains a motor-operated valve and the flowpath is combined with the opposite HPSI train to form a single flowpath. Upon a safety injection actuation signal, the HPSI trains are cross connected via the cold-leg injection lines. If a HPSI pump is not operating and the motor-operated valves for both trains are open, the HPSI pump discharge check valve for the idle pump provides isolation from the operating train. This prevents diversion of HPSI flow from the RCS to ensure that an adequate amount of flow is provided for emergency core cooling during a loss-of-coolant accident (LOCA).

A check valve that was improperly assembled could affect the leakage through the valve during reverse flow conditions. For example, referring to the simplified flow diagram in Attachment 2, if the "B" HPSI pump discharge check valve SIB-V405 were to fail to close completely under reverse flow conditions, and the "B" HPSI pump was inoperable, part of the injection flow from the "A" HPSI pump would be directed back through HPSI Valves SIA-UV617, -627, -637, -647 and SIB-UV616, -626, -636, -646. The flow would then be directed through the "B" HPSI pump mini-flow line Valves SIB-UV667 and SIB-659, and back to the RWT. As stated previously, upon a safety injection actuation signal, the cold-leg injection valves would open and remain open.

The HPSI pump discharge check valves are 4-inch, 1500-pound, bonnet-hung, pressure-seal swing check valves manufactured by Borg-Warner. On April 9, 1998, during a Unit 1 refueling outage surveillance test, Valve 1PSIA-V404, the Unit 1, Train "A" HPSI pump discharge check valve, failed to meet its acceptance criterion for reverse flow during a flow test. The cause of the condition was determined to have been vertical misalignment of the valve disc within the valve body, which caused the disc to become jammed and not seat properly. On May 7, 1998, the licensee concluded that the amount of leakage resulted in a condition outside the design basis of the facility.

Valve 1PSIA-V404 was repaired during the Unit 1 refueling outage and its post-maintenance test was completed satisfactorily. However, on May 13, 1998, with Unit 1 operating, the check valve system engineer determined that the valve had been repaired incorrectly. Additional

testing confirmed that the valve was inoperable because of excessive reverse leakage. The licensee repaired the valve and returned the Unit 1 HPSI system to an operable condition on May 15, 1998.

During its review of the applicability of the vertical misalignment issue to other HPSI pump discharge check valves, the licensee performed non-intrusive measurements of valve dimensions and reviewed previous surveillance test data. On May 14, 1998, the licensee determined that Valve 2PSIB-V405, the Unit 2, Train "B" HPSI pump discharge check valve was also misaligned and testing confirmed that the valve had excessive reverse flow. The licensee repaired the valve and returned the Unit 2 HPSI system to an operable condition on May 16, 1998. On June 5, 1998, they reported the condition to the NRC in Licensee Event Report (LER) 50-528/-529/-530/98-006.

The reverse leakage conditions were masked prior to April 9, 1998, due to an inadequate surveillance test. Specifically, the surveillance test in use only measured the injection flow rate to the reactor vessel under limited conditions and did not quantify the reverse flow leakage through the check valves.

The NRC initiated this inspection to review the event, determine if the licensee had returned the HPSI systems to an operable condition, and assess the licensee's performance.

I Operations

O1 Conduct Of Operations

O1.1 Unit 1 and Unit 2 - Technical Specification (TS) 3.0.3 Late Entry

a. Inspection Scope

The inspectors reviewed events and circumstances associated with the initial logging of a late entry into TS 3.0.3 for Unit 1 and Unit 2 when HPSI pump discharge check valves were inoperable because of excessive reverse flow leakage.

b. Observations and Findings

Unit 1

The Limiting Condition for Operation (LCO) for TS 3.5.2 requires that two emergency core cooling system (ECCS) subsystems shall be operable for each unit with each subsystem comprised of an operable HPSI pump, an operable low-pressure safety injection (LPSI) pump, and an independent operable flowpath. If a HPSI pump discharge check valve allows excessive reverse flow, then the opposite-train ECCS subsystem does not contain an independent operable flowpath. When the HPSI systems are interconnected via the cold-leg injection valves, the check valve is the flowpath boundary. An action requirement associated with TS 3.5.2 allows one ECCS subsystem to be inoperable for 72 hours prior to requiring the initiation of a plant shutdown.

Technical Specification 3.0.3 requires if an LCO is not met, except as allowed by the associated action requirement, that the licensee shall initiate action within 1 hour to place the unit in a mode in which the LCO is not applicable.

As documented in the Unit 1 log for May 13, 1998, at 3 a.m. the licensee began a planned Train "A" equipment maintenance outage and declared Train "A" equipment, including the Train "A" HPSI system inoperable..

On May 13, 1998, at 1 p.m., the licensee conducted a meeting to discuss operability of Valve 1PSIA-V404, the Unit 1 Train "A" HPSI pump discharge check valve. The licensee had questioned whether the valve had been assembled correctly following maintenance during the April 1998 refueling outage. (For additional details, see Section E1.1.b.3). The licensee's reportability determination, dated May 21, 1998, documented that at this meeting, operations personnel concluded that sufficient evidence existed to suggest that the valve would not perform its intended function, and that the valve was declared inoperable, pending testing.

Following the 1 p.m. meeting, the Unit 1 operators made an entry in the Unit 1 log at 2:32 p.m. that HPSI Train "A" was inoperable due to the potential that the internals for Valve 1PSIA-V404 were misaligned (HPSI Train "A" was already inoperable. This entry explicitly identified a new cause for the inoperable condition.) The entry also stated that operations would establish conditions necessary to test the valve for reverse flow and was proceeding with isolating the Train "A" HPSI system from the Train "B" HPSI system. The inspectors noted that the log entry did not address operability of the HPSI Train "B" flowpath.

The operators completed the isolation of the HPSI trains at 3:45 p.m., 1 hour and 13 minutes after the 2:32 p.m. log entry. The licensee informed the inspectors that the isolation of the HPSI trains, by closing and removing power from the Train "A" HPSI loop injection valves, was performed to provide equipment isolation in preparation for testing and maintenance on Valve 1PSIA-V404. The licensee further stated that the isolation was not initiated to separate the HPSI trains to prevent flow diversion from the Train "B" HPSI system through the Train "A" HPSI pump discharge check valve during an accident. Since, as discussed in Section E1.2 of this report, the reverse flow leakage through the check valve reduced the HPSI flow required to mitigate an accident condition, the inspectors considered that Train "B" did not have an independent operable flowpath. The Train "A" HPSI system was already inoperable for maintenance. Consequently, this condition exceeded the LCO for TS 3.5.2, and therefore required an entry into TS 3.0.3.

Control room operators did not record the TS 3.0.3 entry in the Unit 1 log. The LER for this event, dated June 5, 1998, stated that since the operators unknowingly entered TS 3.0.3 when Valve 1PSIA-V404 was declared inoperable, they did not log this condition. During later discussions, the licensee informed the inspectors that operators recognized the flow diversion potential and impact on system operability, but considered

the condition to be only an example of a degraded condition until testing confirmed otherwise. This contradicted the documentation of the conclusions reached at the May 13 meeting as documented in the reportability determination. The inspectors concluded that TS 3.0.3 should have been entered at 2:32 p.m. on May 13, when HPSI Train "A" was declared inoperable due to Valve 1PSIA-V404.

TS 3.0.3 required that within 1 hour, action shall be initiated to place the unit in a mode in which TS 3.5.2 did not apply. The basis for T.S. 3.0.3 stated that the purpose of the 1 hour was to allow for the preparation for an orderly shutdown before initiating a change in plant operation and that this time permits the operator to coordinate the reduction in electrical generation with the load dispatcher to ensure the stability and availability of the electrical grid. Even though the control room operators recognized that the inoperable check valve had an impact on system operability, they did not initiate action to place the unit in a mode in which the HPSI system was not required. When the inspectors discussed this issue with department management representatives, the inspectors determined that these managers were unfamiliar with the 1-hour requirements of TS 3.0.3. The managers informed the inspectors that they considered the 1 hour specified in TS 3.0.3 as an additional hour that was available to correct the inoperable condition instead of the time allowed to prepare for an orderly plant shutdown.

At 3:45 p.m. on May 13, 1998, operators completed the isolation of all four Train "A" HPSI RCS injection valves (Valves SIA-HV-617, 627, 637, 647). Therefore, Train "B" of the HPSI system was made operable at that time. On May 16, 1998, operators recognized that both trains of the HPSI system were inoperable on May 13, 1998, that an entry into TS 3.0.3 was required, and documented the TS 3.0.3 entry in the log as a late entry. The inspectors verified that a late entry was made into the Unit 1 log. The inspectors considered that TS 3.0.3 was declared from 2:32 p.m. on May 13, 1998, when Valve 1PSIA-V404 was inoperable, until the Train "B" HPSI system flowpath was made operable at 3:45 p.m. by isolating the two HPSI trains. Subsequent to the onsite portion of the inspection, the licensee changed its position with respect to the late entry into TS 3.0.3 and revised the logs accordingly.

The licensee's failure to comply with the requirements of TS 3.0.3 was determined to be an example of an apparent violation (50-528/-529/-530/9814-01).

Unit 2

On May 14, 1998, at 9:55 p.m., operations declared the Train "B" HPSI pump inoperable after receiving a memorandum from engineering (see Section E1.1.b.4) recommending that Valve 2PSIB-V405, the Train "B" HPSI pump discharge check valve, be declared inoperable. The inspectors' review of the log entries indicated that operators did not recognize that when the Train "B" HPSI pump discharge check valve was inoperable, it affected HPSI system operability of both trains, and therefore, required entry into TS 3.0.3. In a similar manner to the Unit 1 actions, operators isolated the HPSI trains in anticipation of performing testing and maintenance on Valve 2PSIB-V405. For this case, however, isolation of the Train "B" HPSI injection valves was completed within 1

hour, at 10:35 p.m. On May 16, 1998, the Unit 2 log had a late entry documenting that at 9:55 p.m. on May 14, 1998, an entry into TS 3.0.3 was required due to the Train "A" HPSI system being inoperable due to Valve 2PSIB-V405 being suspected of having excessive back leakage. Another late entry on May 16 documented that at 10:35 p.m. on May 14, TS 3.0.3 was exited when the Train "B" HPSI injection valves were isolated. Subsequent to the onsite portion of the inspection, the licensee changed its position with respect to the late entry into TS 3.0.3 and revised the logs accordingly.

c. Conclusions

Operations personnel did not demonstrate an understanding of TS requirements nor an understanding of the impact of the misaligned HPSI check valve on system operability. An example of an apparent violation was identified for failure to implement the requirements of TS 3.0.3 for Unit 1.

O3 Operations Procedures and Documentation

O3.1 Response to Inadequate HPSI Flow

a. Inspection Scope

The inspectors reviewed existing procedures that the licensee would have used during LOCA scenarios involving inadequate HPSI flow. The inspectors also interviewed reactor operators and observed two crews in the simulators respond to a LOCA with degraded HPSI flow.

b. Observations and Findings

A senior reactor operator walked the inspectors through existing procedures that control room operators would be expected to use during a LOCA with inadequate safety injection flow. Emergency Procedures 40EP-9EO03, "Loss of Coolant Accident," Revision 5, and 40EP-9EO09, "Functional Recovery," Revision 6, addressed the degraded HPSI flow condition and the required actions to recover the inventory control safety function. The inspectors verified that the instrumentation available to the operators in the control room would allow for the diagnosis of a degraded HPSI flow condition. If HPSI flow was unacceptable and unrestorable, the emergency procedures provided a method of alternate response to recovery. The inspectors also observed two crews successfully respond to a LOCA with degraded HPSI flow scenario on the plant simulators. The circumstances of this simulator scenario, "LOCA with Degraded HPSI Flow," July 14, 1998, were a LOCA and a failure of the Train "B" HPSI pump with its associated discharge check valve stuck at 15 percent open. Operator performance was considered acceptable if the crew took action to depressurize the RCS to initiate LPSI injection flow prior to the reactor vessel outlet plenum level decreasing to less than 23 percent. The performance of both crews was good.

c. Conclusions

The inspectors concluded that existing procedures were adequate and available for responding to a degraded HPSI flow condition.

II Maintenance

M1 Conduct of Maintenance

M1.1 Valve Maintenance

a. Inspection Scope

The inspectors reviewed the maintenance history of the HPSI pump discharge check valves, interviewed maintenance and engineering personnel, reviewed maintenance procedures, and examined a spare valve in the maintenance shop.

b. Observations and Findings

Evolution of Maintenance Procedure

The subject HPSI pump discharge check valves were 4-inch, 1500-pound, bonnet-hung, pressure-seal swing check valves manufactured by Borg-Warner. The licensee's maintenance procedures for these valves had evolved since plant construction. The original maintenance procedure applicable to the subject valves, O&M Manual 1024, Revision A, did not identify specific instructions regarding how far the bonnet retaining ring should be threaded into the body of the valve. The licensee informed the inspectors that during plant construction, valves were disassembled prior to being welded in place. During reassembly, the bonnet retaining ring was threaded into the valve body until it bottomed after the internals were installed.

As described to the industry in NRC Information Notice (IN) 89-62, "Malfunction of Borg-Warner Pressure Seal Bonnet Check Valves Caused By Vertical Misalignment of Disc," dated August 31, 1989, the assembly instructions for the subject valves were missing an essential assembly step, which, if not implemented, would result in the disc assembly being suspended too low inside the body of the valve. If the disc assembly was suspended too low, the valve may initially seat acceptably but still become jammed after forward flow exercised the valve, thus preventing proper valve seating and subsequently allowing reverse flow leakage. The original factory assembly process included a step that unthreaded the bonnet retaining ring after it bottomed in the valve body until the correct disc height was obtained. Backing out the retaining ring to achieve the correct vertical dimension was not included as a required step in the licensee's original procedure.

The licensee issued Procedure 31MT-9ZZ17, "Disassembly and Reassembly of Borg-Warner Check Valves," Revision 0, on November 30, 1992, after receiving vendor information developed in response to IN 89-62. As discussed in Section E1.4, the licensee had initially determined that no actions were necessary in response to the IN. This contributed to the 3-year delay from the time that IN 89-62 was issued to the time that Procedure 31MT-9ZZ17 was issued. The procedure included a step of measuring the distance from the top of the valve body to the top of the bonnet retaining ring (called the "A" dimension) before valve disassembly and after reassembly. However, this step did not ensure that the valve disc-to-body vertical alignment was correct. If the valve had been previously disassembled, measuring the "A" dimension prior to maintenance and returning the valve to that "A" dimension during reassembly would have merely returned the valve to its previous configuration, which may have been incorrect.

The licensee issued Revision 1 of Procedure 31MT-9ZZ17 on November 17, 1994. This revision included measurement of the "B" dimension, the distance from the top of the valve bonnet to the top of the valve body. The procedure contained instructions to determine the correct vertical disc-to-body configuration, as determined by the disc-to-body measurements, and place the valve in the correct alignment. However, performing these steps was only required if inspection of the valve identified improper seating. An enhancement to the dimensional measurement process was implemented in Procedure 31MT-9ZZ17, Revision 4, on January 24, 1997, to simplify the measurement process. The licensee did not evaluate the need to adjust valve alignment when these procedure revisions were made. The 1994 revision of Procedure 31MT-9ZZ17 appeared adequate to ensure that the correct valve alignment was established, but correct vertical alignment of all of the valves was not verified at that time.

Maintenance History

With respect to Valve 1PSIA-V404, the Unit 1, Train "A" HPSI pump discharge check valve, when maintenance was performed on April 10, 1998, Procedure 31MT-9ZZ17 was not followed because of personnel error while taking measurements to establish the correct "A" and "B" dimensions. This resulted in the erroneous conclusion that the valve disc had been approximately 0.5 inches too high inside the body of the valve. To correct this condition, a 0.5-inch spacer ring was installed. Later, as discussed in Section E1.1.b.3, the licensee recognized this error and corrected the condition by removing the spacer on May 15, 1998. The previous time that Valve 1PSIA-V404 was disassembled was May 1, 1992. The steps to measure the "A" or "B" dimensions and verify that the disc-to-body alignment was correct were not included in the maintenance procedure at that time. Therefore, the valve disc was susceptible to jamming open since May 1, 1992.

On May 15, 1998, the licensee discovered that the disc in Valve 2PSIB-V405, the Unit 2, Train "B" HPSI pump discharge check valve was vertically misaligned. Valve 2PSIB-V405 was previously disassembled on April 14, 1993. The Unit 2 valve was last reassembled prior to the revision of Procedure 31MT-9ZZ17 that would have established the correct vertical alignment. Therefore, the valve disc was susceptible to jamming open since April 14, 1993.

For the remaining HPSI pump discharge check valves on all three units, the licensee evaluated the maintenance and testing history, performed as-found external measurements of the "A" and "B" dimensions, and performed reverse flow tests. Each of the remaining four valves had as-found reverse flow test results of 0 gpm.

c. Conclusions

The licensee's maintenance procedure for Borg-Warner bonnet-hung, pressure-seal check valves did not include adequate instructions for ensuring correct vertical disc alignment until November 1994. The inspectors concluded that the licensee missed an opportunity to identify and correct the vertical alignment issue at that time. Once the problem was recognized in 1998, the licensee developed and implemented an acceptable plan to identify and correct the adverse condition on all of the HPSI pump discharge check valves.

M1.2 Valve Testing

a. Inspection Scope

The inspectors reviewed the inservice testing (IST) history of the HPSI discharge check valves, interviewed maintenance and engineering personnel, and reviewed testing procedures.

b. Observations and Findings

The licensee identified in its OEA review of NRC IN 88-70, "Check Valve Inservice Testing Program Deficiencies," that its IST program did not require reverse-flow testing of the HPSI pump discharge check valves. As discussed in Section E1.4, the licensee originally concluded that because they had an NRC-approved IST program, any changes to the program were considered enhancements. Therefore, the need for procedure revisions was not considered a priority. The licensee added reverse-flow testing requirements for these valves to its IST program on July 26, 1992. The test methodology involved operating one HPSI pump and verifying adequate flow was delivered to the RCS when both trains of the HPSI system were cross-connected. This method was intended to demonstrate that the HPSI pump discharge check valve in the idle train had closed as evidenced by maintaining sufficient flow to the RCS with inconsequential flow diversion through the check valve. No explicit acceptance criterion was specified for reverse flow through the check valve. The test was performed for each valve during refueling outages to satisfy the IST program surveillance requirements of TS 4.0.5. Due to the absence of reverse flow measurements through these check valves, these surveillance tests did not identify that Valves 1PSIA-V404 and 2PSIB-V405 were inoperable since 1992 and 1993, respectively.

This forward-flow testing methodology continued until the 1998 Unit 1 refueling outage. As discussed in Section E1.1, Procedure 73ST-9XI33, "HPSI Pump and Check Valve Full Flow Test," Revision 9, was issued on March 12, 1998, to perform a forward-flow type test and included an allowable 20 gpm variance in the measured flow in the acceptance criterion. The development of an explicit acceptance criterion for check

valve reverse flow was a corrective action from Condition Report/Disposition Request (CRDR) 2-7-0420 that was written following the October 28, 1997, Unit 2, safety injection tank (SIT) level decrease event described in Section E1.1.b.1. After Valve 1PSIA-V404 failed this test on April 9, 1998, and was repaired, plant conditions had changed and precluded the forward-flow type test from being performed. Therefore, the licensee issued Revision 10 of Procedure 73ST-9XI33 on April 11, 1998, which included a new testing methodology consisting of pressurizing the downstream side of the check valve and monitoring reverse flow through the valve. The new methodology was subsequently described in a new procedure (Procedure 73ST-9XI35) issued on May 13, 1998.

After the test failure of Valve 1PSIA-V404 during the Unit 1 refueling outage, engineering personnel continued investigation of the performance requirements for HPSI discharge check valve reverse flow. Based on engineering analysis of ECCS performance requirements and actual HPSI system performance (Section E1.2), the licensee determined that a reverse flow acceptance criterion of 10 gpm at a test differential pressure of 50 - 125 psid would be valid for all six valves in the three units. Procedure 73ST-9XI35, "HPSI Pump Discharge Check Valve Closed Exercise Test," was revised to include the 10 gpm acceptance criterion in Revision 6 on May 26, 1998.

Technical Specification 4.0.5 states, in part, that, ". . . inservice testing of ASME Code Class 1, 2, and 3 pumps and valves shall be performed in accordance with Section XI of the ASME Boiler and Pressure Vessel Code and applicable Addenda . . . ."

Prior to January 15, 1998, the applicable Edition of the ASME Code was the 1980 Edition through Winter 1981 Addenda. Subsection IWV, "Inservice Testing of Valves in Nuclear Power Plants," of Section XI of the ASME Code, Article IWV-2000, defines Category A valves as those for which seat leakage is limited to a specific maximum amount in the closed position for fulfillment of their function and defines Category C valves as those which are self-actuating in response to some system characteristic, such as check valves. Article IWV-2000 also states that valves within the scope of this section shall be placed in one or more categories and that when more than one distinguishing category characteristic is applicable, all requirements of each of the individual categories are applicable.

Effective January 15, 1998, the applicable Edition of the ASME Code was the 1989 Edition. Subsection IWV, "Inservice Testing of Valves in Nuclear Power Plants," required that valve testing be performed in accordance with the requirements stated in ASME/ANSI Inservice Testing of Valves in Light-Water Reactor Power Plants OM-10, OMa-1988 Addenda to the OM-1987 Edition. The definitions and requirements identified above for the 1980 ASME Code Edition are equivalent to the 1989 ASME Code Edition.

The HPSI pump discharge check valves have a safety-related function to close to prevent diversion of flow between trains of a system. As identified in NUREG-1482, "Guidelines for Inservice Testing at Nuclear Power Plants," the ASME Code does not specifically require that these valves be Category A; although, there may be a leakage limit based on the total system requirements. The licensee conducts their IST program

in accordance with Procedure 73DP-9XI01, "Pump and Valve Inservice Testing Program - Component Tables," Revision 5. Procedure 73DP-9XI01 identified that the HPSI pump discharge check valves were classified as Category C valves. This classification was acceptable; however, NUREG-1482 also identified that for valves of this type that the licensee should evaluate the consequences of reverse flow. This evaluation should consider: 1) the loss of water from the system and connecting systems; 2) the effect that the leakage might have on components and piping downstream of the valve; and 3) any increase in radiological exposure resulting from the leakage. The licensee had not performed evaluations of this type until the current problems with the HPSI pump discharge check valves were identified. These evaluations are discussed in Sections E1.1 and E1.2. At the conclusion of the onsite portion of the inspection, the licensee was evaluating whether the HPSI pump discharge check valves should be re-classified as Category A in the IST program.

c. Conclusions

The IST program was ineffective at demonstrating operability of the HPSI pump discharge check valves.

III Engineering

E1 Conduct of Engineering

E1.1 HPSI System Degraded Condition Review

a. Inspection Scope

To review the HPSI system degraded condition, the inspectors toured relevant areas of the facility including the auxiliary building, control room, and maintenance shop. The inspectors also conducted interviews with licensee personnel, reviewed selected procedures, calculations, maintenance packages, OEAs, and corrective action documents, and reviewed the licensee's investigation report and LER 50-528/-529/-530/98-006.

b. Observations and Findings

b.1 1997 Unit 2 Outages

On October 28, 1997, during Unit 2 restoration prior to startup from a forced outage, operators were performing Procedure 40OP-9SI02, "Recovery from Shutdown Cooling to Normal Operating Lineup," Revision 14, Section 7.0, "Boration Of Cold Leg Injection Lines," using the Train "A" HPSI pump. During the evolution, pressure and water level in SIT 1A decreased unexpectedly when Valve SIB-UV638, the SIT 1A check valve leakage line isolation valve, was opened to establish a recirculation path for the 1A injection line. The reactor operator closed Valve SIB-UV638, which terminated the loss of inventory, and restored the SIT pressure. The onshift crew contacted engineering personnel, who determined the cause of the loss of inventory in SIT 1A was leakage past Valve 2PSIB-V405, the Train "B" HPSI pump discharge check valve, to the RWT.

The engineering personnel reviewed the results of the previously performed reverse exercise test of Valve 2PSIB-V405, conducted during the previous refueling outage in accordance with Procedure 73ST-9XI33, and identified that the check valve was found to have a leakrate of approximately 30 gpm. This test had been performed to satisfy the IST program requirements. As stated previously in Section M1.2, the refueling outage test was accepted because adequate forward flow to the RCS was obtained when the HPSI trains were cross connected but there was no explicit acceptance criterion for reverse flow through the check valve. Therefore, the operators concluded that this amount of reverse flow did not prevent the HPSI system from performing its design function and plant startup continued. The onshift crew initiated CRDR 2-7-0420 to evaluate a procedure change to alert operators of the potential to affect SIT level when performing the cold-leg boration evolution.

The check valve leakage caused a depressurization of the loop injection piping during the cold-leg boration to approximately 600 psig and the SIT began to discharge as designed. The licensee documented in the CRDR that the condition could have been identified before if operations had questioned why safety injection header pressure did not respond as expected during the cold-leg recirculation line-up prior to opening SIB-UV638. The safety injection header pressure should have not decreased below SIT pressure and the SIT should not have discharged. The CRDR also documented that, "Operations noted the response to PI-339 [safety injection header pressure] was not normal, however, they were unable to explain the condition so the procedure was continued."

The CRDR also contained a reference to a similar event, which occurred on October 10, 1997, during plant restoration prior to startup from the previous refueling outage. Again, SIT level decreased during the performance of Procedure 40OP-9SI02, Section 7.0 with the Train "A" HPSI pump. In that particular instance, the decrease in level was terminated by the reactor operator closing the Train "B" injection valve and isolating the trains. This similar example was highlighted in the CRDR because the same crew was on duty when each SIT transient occurred during the cold-leg boration evolution. The crew did not request engineering assistance to evaluate the SIT level transient and the crew did not conclude that Valve 2PSIB-V405 was leaking. Reactor startup activities continued and the reactor was made critical later that day. With respect to the October 10, 1997, event, operations personnel had concluded that the unexpected loss of SIT inventory was caused by an "eductor effect," which caused a localized low pressure condition at the SIT outlet during HPSI cold-leg recirculation, and that the condition should have been expected. The inspectors did not consider this to be a plausible explanation because of the high localized pressure drop that would be required to decrease pressure below SIT pressure.

The inspectors reviewed control room and unit logs for October 10 and 28, 1997, and identified that no log entries were made regarding the SIT level decreases. The licensee's Procedure 40DP-9OP22, "Operations Logkeeping," Revision 9, Step 3.3.5 stated, in part, "The information entered in the Control Room Log shall include . . . abnormal occurrences, unless previously logged and identified by an active corrective action document." The licensee did not agree with the inspectors' characterization that the SIT level transients were abnormal occurrences. The inspectors determined that the

licensee's procedures did not exempt the conditions experienced on October 10 and 28 from being logged in accordance with the logkeeping procedure. Therefore, the inspectors concluded that the failure to log the abnormal SIT level transients that occurred on October 10 and 28, 1997, were two examples of an apparent violation of TS 6.8.1, which required adherence to Procedure 40DP-9OP22 (50-528/-529/-530/9814-02).

While the licensee identified a check valve reverse leakage problem as documented in CRDR 2-7-0420 on October 28, 1997, they failed to take prompt corrective actions to resolve the problem. 10 CFR Part 50, Appendix B, Criterion XVI, "Corrective Action," requires that measures shall be established to assure that conditions adverse to quality are promptly identified and corrected and in the case of significant conditions adverse to quality that the measures shall assure that the cause of the condition is determined and corrective action taken to preclude repetition. The inspectors considered the October 10 and 28, 1997, Unit 2 SIT drain events to have been occurrences where a significant condition adverse to quality (excessive reverse flow through Valve 2PSIB-V405) was not promptly identified and corrected. These were considered the first two examples of an apparent violation of 10 CFR Part 50, Appendix B, Criterion XVI (50-528/-529/-530/9814-03).

During the evaluation and resolution of CRDR 2-7-0420, the licensee concluded that a 20 gpm check valve reverse leak rate acceptance criterion should be sufficient to prevent unacceptable HPSI flow diversion. This conclusion was not based upon a rigorous calculation of the impact of flow diversion; rather, it was based on a review of leakage acceptance criteria for some check valves in the LPSI system and the methodology employed to select their leakage acceptance criteria.
Procedure 73ST-9XI33 was changed in Revision 9 to include the explicit acceptance criteria of either: 1) less than 20 gpm difference between the sum of hot and cold-leg injection flow rates before and after the HPSI trains were cross connected; or 2) hot-leg injection flow greater than or equal to 525 gpm, cold-leg injection flow greater than or equal to 525 gpm, and total HPSI flow less than or equal to 1200 gpm. The forward-flow acceptance criteria were consistent with the surveillance requirements in TS 4.5.2.h.

c.1 Conclusions

The inspectors concluded that the licensee had an opportunity to detect the flow diversion through Valve 2PSIB-V405 on October 10, 1997; however, the operators failed to identify the cause of unexpected decrease in SIT level. On October 28, the licensee identified the condition but did not take effective corrective action because of an incorrect assessment of the operability implications. Two examples of an apparent violation were identified for the failure to make log entries for the SIT level decreases, which occurred on two separate occasions while performing the cold-leg boration process. Two examples of an apparent violation were identified for inadequate corrective action to identify and correct a significant condition adverse to quality.

b.2 1998 Unit 1 Refueling Outage and Subsequent Operation

On April 9, 1998, the licensee had indication of excessive reverse flow through Valve 1PSIA-V404 during performance of Procedure 73ST-9XI33. The control room received an unexpected equipment drain tank (EDT) high level alarm and the test was suspended. The licensee concluded that reverse-direction flow through the check valve pressurized the Train "A" ECCS suction piping and the Train "A" containment spray (CS) pump discharge piping to the 650 psig setpoint of Valve 1JSIA-PSV194, the Train "A" shutdown cooling heat exchanger (SDCHX) outlet relief valve. The leak rate through Valve 1PSIA-V404 was initially estimated to be 85 gpm. On April 10, 1998, the licensee initiated CRDR 1-8-0238 to document the event and classified the CRDR as "significant" with action requests to perform an equipment root cause of failure evaluation and reportability determination. During a subsequent engineering evaluation, the licensee estimated that the event resulted in relief valve blowdown to the EDT at a flow rate of approximately 120 gpm and a total leak rate through Valve 1PSIA-V404 of approximately 214 gpm. The licensee also concluded that the valve body and disc had been in a misaligned condition for the entire previous operating cycle and likely had been misaligned since the last time maintenance was performed on the valve on May 1, 1992. At that time, the licensee had not yet incorporated additional guidance for addressing vertical misalignment concerns for Borg-Warner check valves in the maintenance procedure. The licensee's review and implementation of in-house and industry operating experience is discussed in Section E1.4 of this report.

The licensee performed Operability Determination (OD) 203 to evaluate the operability impact of the inadvertent pressurization. The OD evaluated the pressure rating and ASME Code allowables for stresses of piping and system components in the HPSI and CS suction piping, CS discharge piping, and SDCHX. The OD concluded that the piping and components remained operable on the basis of not exceeding ASME Code allowable stresses for the suction piping, not exceeding the design pressure for the CS discharge piping, and not exceeding the pressure rating of valves or flanges in the suction piping. The licensee also performed a system walkdown with the HPSI and CS pumps operating to examine performance of the pump seals and pipe flanges. No leaks were identified and no pipe supports exhibited signs of water hammer. The inspectors reviewed the OD and concluded that the licensee's evaluation of system operability was acceptable.

Maintenance technicians disassembled and inspected Valve 1PSIA-V404 via Work Order (WO) 836600 and Procedure 31MT-9ZZ17 on April 10, 1998. With engineering support, the technicians determined that a vertical offset existed in the alignment of the valve disc with respect to the valve body. The licensee concluded that the valve disc had been located too high in the body of the valve and that the disc needed to be lowered approximately 0.5 inch. Personnel reverified the calculation for the desired vertical dimensions, but did not independently verify the measurement of the dimensions. The technicians made a measurement error that resulted in an incorrect determination of the magnitude of the vertical offset. Maintenance and engineering personnel concluded that a spacer ring would have to be installed to adjust the height of the disc. Therefore, WO 836600 was amended to Deficiency Work Order (DFWO) 836600 to install a carbon steel spacer ring between the silver plated pressure

seal ring and the threaded retaining ring to compensate for the vertical offset. Longer bonnet studs were also required to accommodate the spacer. Installation of the spacer ring resulted in the valve disc being located too low within the body of the valve to seat properly. The failure to correctly assemble the check valve to correct the reverse leakage condition was considered to be the third example of an apparent violation of 10 CFR Part 50, Appendix B, Criterion XVI (50-528/-529/-530/9814-03).

A DFWO was the licensee's method for which degraded and nonconforming conditions requiring engineering direction were dispositioned and corrected. The licensee considered the DFWO a design change and completed a 10 CFR 50.59 safety evaluation to document that the change did not involve an unreviewed safety question. The inspectors reviewed the DFWO and concluded that it included an adequate evaluation of the acceptability of these subcomponents in the valve. The inspectors asked if any as-built drawings were revised to reflect the implementation of the DFWO and were informed that the design documents were not changed nor were they planned to be changed. The inspectors were concerned that installation of the spacer and replacement of the bonnet studs without updating any design documentation was representative of inadequate design control. The licensee informed the inspectors that when a maintenance planner reviews the maintenance history of a component as part of work package preparation, the maintenance history would reveal that subcomponents had been installed or replaced such as the spacer and studs for Valve 1PSIA-V404. The licensee, upon further evaluation, initiated CRDR 9-8-0893 to address this issue. NRC review of CRDR 9-8-0893 is considered to be an unresolved item (URI) (50-528/-529/-530/9814-04).

Procedure 73ST-9XI33 required full HPSI flow with the reactor vessel head removed. On April 11, 1998, after completion of the DFWO, the reactor vessel head had been reinstalled. Therefore, plant conditions did not allow the normal, forward flow test to be performed. An alternate test method was developed in Revision 10 of Procedure 73ST-9XI33 using demineralized water to pressurize the down stream side of the check valve and opening a drain valve on the upstream side of the valve to determine reverse flow. On completion of the test, Valve 1PSIA-V404 was declared operable with a measured leak rate of 18 gpm at a test pressure of 96 psig. The leak rate exceeded an administrative limit of 10 gpm, which in accordance with the test procedure, required the initiation of a work request. The inspectors verified that Work Request 941341 was initiated to repair the valve during the next outage. The licensee informed the inspectors that it had accepted these test results as satisfactory because they assumed that reverse-flow leakage would decrease when HPSI pump discharge pressure from the opposite train improved the valve disc-to-body seat contact during system operation.

On May 7, 1998, the licensee determined during its investigation of CRDR 1-8-0238 that the as-found condition of Valve 1PSIA-V404 on April 9, 1998, represented a condition that would have prevented it from performing its intended function during an accident. The licensee concluded that this event was reportable to the NRC per 10 CFR 50.73 and submitted LER 50-528/98-006 on June 5, 1998. The results and consequences of this assessment are discussed in Section E1.2.

Technical Specification 3.5.2 requires in Modes 1, 2, and 3, that two independent ECCS subsystems shall be operable with each subsystem comprised of one operable HPSI pump, one operable LPSI pump, and an independent operable flow path. Action statement a. associated with TS 3.5.2 required that with one ECCS subsystem inoperable, restore the inoperable subsystem to operable status within 72 hours or be in at least hot standby within the next 6 hours and in hot shutdown within the following 6 hours. As discussed earlier, Valve 1PSIA-V404 was installed incorrectly and did not have correct vertical disc alignment from May 1, 1992, until May 15, 1998. Therefore, Train "B" of the Unit 1 ECCS did not have an independent operable flow path from May 1, 1992, until May 15, 1998, and the licensee did not comply with Action a. of TS 3.5.2. This was considered to be the first example of an apparent violation of TS 3.5.2 (50-528/-529/-530/9814-05).

c.2 Conclusions

The April 1998, Unit 1 refueling outage test results demonstrated that Valve 1PSIA-V404 was in a significantly degraded condition. The maintenance history for the subject valve indicated that it had been in that condition since 1992. An example of an apparent violation of 10 CFR Part 50, Appendix B, Criterion XVI was identified for failure to correct the problem with Valve 1PSIA-V404 during maintenance. An incorrect interpretation of the 18 gpm April 11, 1998, post-maintenance testing results, contributed to continued operation with an inoperable valve. An example of an apparent violation of TS 3.5.2 was identified for having an inoperable independent HPSI flowpath for approximately 6 years.

b.3 Online Corrective Maintenance of Valve 1PSIA-V404

On May 13, 1998, as part of the CRDR 1-8-0238 review, the check valve engineer reviewed measurements of a spare Borg-Warner check valve and discussed the maintenance procedure and spacer installation with maintenance technicians. The engineer determined that a measurement error may have occurred during the April 1998 maintenance on Valve 1PSIA-V404, resulting in a vertical disc-to-body misalignment.

The test methodology that was used in Procedure 73ST-9XI33, Revision 10, was extracted and placed in Procedure 73ST-9XI35, Revision 0. Since the Unit 1 refueling outage, engineering personnel had determined that a new acceptance criterion of 30 gpm reverse flow through Valve 1PSIA-V404 would still maintain acceptable HPSI forward flow for system operability. This was based on an evaluation of the operating performance of the HPSI pumps and system flow characteristics. Procedure 73ST-9XI35, Revision 0 contained the 30 gpm acceptance criterion. On May 14, 1998, the licensee performed the test on Valve 1PSIA-V404 and it failed with an as-found result of 33 gpm at a differential pressure of 95 psid. The licensee made a one-hour 10 CFR 50.72 notification to the NRC to report that this was a condition outside the design basis of the facility.

After the failed test, the licensee disassembled the valve, removed the spacer ring in accordance with WO 840712, and verified that the disc was misaligned in the valve body. The maintenance technicians performed an inspection and exercised the valve

internals per WO 840826 and Procedure 73ST-9ZZ25. The technicians then attached a stainless steel wire to the swing arm of the valve, installed the internals with the wire extending outside the valve body (without the silver seal gasket installed), and set the bonnet height to the desired vertical dimension. When this was done, the technicians stroked the valve by pulling on the wire until a metallic noise was heard, indicating that the disc had contacted the backstop. This provided an additional indication that the valve was free to stroke. The technicians then removed the wire and reassembled the valve with the silver seal to the correct vertical dimensions.

The inspectors noted that WO 840712 was written to disassemble, rework, and reassemble Valve 1PSIA-V404. There were no instructions included to remove the spacer ring. The inspectors asked whether a special WO or WO amendment was required prior to the removal of the spacer ring and whether removing the spacer ring was a design change, as was the case previously for the installation of the spacer ring. The licensee stated that they considered the removal of the spacer to be a rework activity and not a design change. Rework was defined as the process by which a degraded or nonconforming item is made to conform to a prior specified design requirement by completion, machining, reassembly, replacing, or other corrective measures. The inspectors noted that the materials list for Valve 1PSIA-V404 that was attached to WO 840712 had not been updated to reflect the installation of the new bonnet studs or spacer ring. This issue will be reviewed as part of URI 50-528/-529/-530/9814-04 to determine whether the licensee implemented adequate design control.

After reassembly of Valve 1PSIA-V404 without the spacer ring, operations performed Procedure 73ST-9XI35, Revision 1 on May 15, 1998, and the valve passed its reverse flow test with a result of 0 gpm at 142 psid.

c3. Conclusions

The questioning attitude of the check valve engineer was instrumental to the identification of the misalignment of Valve 1PSIA-V404. Corrective actions were taken to restore the valve to an operable condition.

b.4 Inoperability of Valve 2PSIB-V405

After the April 1998 test failure of the Unit 1 Valve 1PSIA-V404, the licensee initiated CRDR 2-8-0128 and OD No. 204 to evaluate the operability impact of this condition for Units 2 and 3. Included in this evaluation was a review of past HPSI full flow test results conducted during the previous refueling outages and measurement of external valve dimensions. On May 14, 1998, as a result of this review and the results of the Unit 1 testing performed the previous day, engineering and maintenance personnel determined that Valve 2PSIB-V405 was misaligned. Engineering recommended to operations in Memorandum 469-00170-BJR that the valve be declared inoperable, that reverse flow testing be performed, and that corrective maintenance and post-maintenance testing be performed. The inspectors noted that the memorandum only addressed operability of Valve 2PSIB-V405 and did not address operability of the entire HPSI system.

The operators declared the Unit 2 Train "B" HPSI pump inoperable based on the recommendation of the memorandum from engineering. The inspectors noted that this was not consistent with the memorandum, which recommended that the Train "B" valve, not the Train "B" pump, be declared inoperable. The impact of reverse flow through Valve 2PSIB-V405 on operability of the Train "A" HPSI system flowpath was not addressed in the Unit 2 log. The licensee informed the inspectors that the Unit 2 log entry only addressed the inoperability of Train "B" because the operators were preparing to perform testing and maintenance on the Train "B" valve, which required removing the Train "B" HPSI system from service. This inoperable check valve required that the opposite HPSI train flowpath be declared inoperable, if the trains were not isolated, because of the safety function of the valve to close and prevent diversion of flow from the RCS.

The licensee performed Procedure 73ST-9XI35 to measure the as-found condition of Valve 2PSIB-V405 on May 15, 1998. The test results indicated a reverse flow rate through the valve of 37.5 gpm at a differential pressure of 6 psid. As discussed in Section E1.2, this amount of reverse flow would prevent the HPSI system from meeting the minimum-required ECCS performance assumed in the safety analysis during a LOCA. The licensee issued WO 836005 to disassemble the valve and verified that the vertical alignment of the disc within the body of the valve was too low and had caused the disc to hang in a cocked-open position. The valve alignment was corrected and the valve was retested in a manner similar to that discussed above for Valve 1PSIA-V404. The retest of Valve 2PSIB-V405 passed with a leakage rate of 0 gpm at 150 psid and the system was declared operable on May 16, 1998. As discussed earlier, Valve 2PSIB-V405 was installed incorrectly and did not have correct vertical disc alignment from April 14, 1993, until May 16, 1998. Therefore, Train "A" of the Unit 2 ECCS did not have an independent operable flow path from April 14, 1993, until May 16, 1998, and the licensee did not comply with Action a. of TS 3.5.2. This was considered to be a second example of an apparent violation of TS 3.5.2 (50-528/-529/-530/9814-05).

c.4 Conclusions

Licensee personnel successfully evaluated and confirmed that Valve 2PSIB-V405 was misaligned and corrective actions were taken to restore the valve to an operable condition. Testing results demonstrated that the valve was in a significantly degraded condition and the maintenance history for the subject valve indicated that it had been in that condition since 1993. The inspectors considered the communication between engineering and operations a weakness, as demonstrated by the May 14, 1998, memorandum from engineering, which did not provide a recommendation regarding HPSI system operability. An example of an apparent violation of TS 3.5.2 was identified.

b.5 Testing and Vertical Dimension Optimization of Remaining Valves

The licensee performed reverse flow tests of the four remaining HPSI pump discharge check valves. All of the valves passed the 73ST-9XI35 test with 0 gpm reverse flow. Based on external dimension measurements and a review of previous forward-flow surveillance tests performed during refueling outages, the licensee concluded that two of the four valves, Valves 3PSIB-V405 and 1PSIB-V405, should be reworked for "vertical dimension optimization."

Valve 3PSIB-V405 was disassembled, inspected, reassembled to a new desired vertical dimension, and retested with 0 gpm reverse flow on May 18, 1998. When Valve 1PSIB-V405 was inspected and reassembled to the desired dimension on May 26, 1998, maintenance technicians discovered that the disc was not seating properly. The technicians discovered that the seat angle of the valve was different than expected. Instead of an expected seat angle of 12 degrees, the licensee discovered that this valve had a seat angle of 5 degrees. The licensee contacted the vendor and was informed that all 4-inch Borg-Warner hung-bonnet pressure-seal valves were supplied with a 12-degree seat angle. The inspectors questioned the licensee regarding the procurement process and quality assurance receipt inspection for the subject valve. After further investigation, the licensee determined that the vendor implemented a design change in 1980 that changed the seat angle from 5 to 12 degrees. Valve 1PSIB-V405 was procured in 1979 and was the only HPSI pump discharge check valve that was built prior to the vendor design change. Therefore, its seat angle was correct. The licensee documented this condition in DFWO 842362. The inspectors will review the issue of updating design documents regarding this condition as part of the URI regarding design control (50-528/-529/-530/9814-04). The licensee calculated a revised vertical dimension to account for the different seat angle, reassembled the valve and successfully retested the valve with no reverse flow on May 27, 1998.

c.5 Conclusions

Licensee personnel successfully confirmed that the remaining four HPSI pump discharge check valves were operable by performing reverse-flow tests. Testing performed after maintenance confirmed that the valves remained operable. The licensee adequately demonstrated that one of the valves (Valve 1PSIB-V405) that had an unexpected seat angle, was acceptable for its application and was also operable.

E1.2 Assessment of As-found Conditions

a. Inspection Scope

The inspectors reviewed calculations and test results and interviewed engineering personnel to determine the safety and regulatory implications of the as-found degraded condition of the Unit 1 and Unit 2 HPSI systems.

b. Observations and Findings

Check Valve Leakage and Degraded HPSI System Performance

The inspectors reviewed Calculation 13-MA-SI-982, "Evaluation of Allowable Leak Rate Criteria for 1,2,3PSIA-V404 and 1,2,3PSIB-V405/Assessment of As-Found Leakage for 2PSIB-V405/1PSIA-V404," Revision 0 and Calculation 13-MC-SI-215, "Revised Single HPSI Pump Delivery Curve for Cold Leg Injection and Flow Rate Requirements for Technical Specification 4.5.2.h," Revision 1. In Calculation 13-MA-SI-982, the licensee performed a best-estimate evaluation of the current as-built HPSI system delivery profile for each HPSI pump based on historical system performance data and compared the resultant delivery profiles to the minimum-required HPSI system delivery profile identified in Calculation 13MC-SI-215 that was used in the LOCA safety analyses. The margin between the as-built HPSI system delivery capability and the minimum-required HPSI system delivery used in the LOCA analyses was used to estimate a maximum allowable leakage profile for the opposite-train HPSI pump discharge check valve. The results indicated that the most limiting system was Train "B" in Unit 3. A maximum leakage rate of 10.2 gpm at 40 psid was determined for Valve 3PSIA-V404, the opposite-train HPSI pump discharge check valve, to ensure that the Train "B" HPSI system would meet its minimum performance requirements.

The licensee also evaluated the April 9, 1998, as-found condition of Valve 1PSIA-V404 and the May 15, 1998, as-found condition of Valve 2PSIB-V405 in Calculation 13-MA-SI-982. This evaluation concluded that the actual reverse flow rate through Valve 1PSIA-V404 during the performance of the Procedure 73ST-9XI33, forward-flow HPSI refueling outage test, was approximately 214 gpm. Because this test had not been intended to obtain direct differential pressure measurements, it did not provide sufficient data to quantify a HPSI performance curve. However, the licensee had enough information to conclude that the results were qualitatively similar to the results obtained for the Unit 2 valve as described below.

Valve 2PSIB-V405 had an as-found reverse leakage test result of 37 gpm at 6 psid. The licensee calculated an as-found loss coefficient for the subject valve and developed a HPSI delivery curve that accounted for leakage through Valve 2PSIB-V405. The as-found degraded HPSI delivery curve and the minimum-required ECCS delivery curve are depicted in Attachment 3. As shown, the estimated as-found HPSI delivery capability was significantly degraded compared to the minimum-required HPSI delivery performance that was assumed in the LOCA analyses. For example, at an RCS pressure of 1200 psig, the estimated HPSI flow rate was approximately 350 gpm less than the flow rate assumed in the LOCA analyses. The licensee concluded that the results for Unit 1 were comparable.

Single Failure Consideration

The licensee identified in Calculation 13-MA-SI-982 that the initial evaluation of the April 9, 1998, Unit 1 refueling outage event included assessments of ECCS suction piping overpressurization, degraded HPSI performance, dose consequences, and impact on containment sump level following a LOCA. The licensee determined that degraded HPSI performance (due to failure of a HPSI pump to start) was the most limiting factor with which to assess the safety significance of the condition.

The inspectors questioned the basis for the licensee's conclusion. The inspectors considered the failure of an emergency diesel generator (EDG) during a LOCA coincident with a loss-of-offsite power to be the most limiting single failure for consideration since none of the ECCS pumps in the affected train would be operating. (The licensee documented in the calculation that if the LPSI and CS pumps associated with an idle HPSI pump were running, the ECCS suction piping would not be overpressurized as occurred on April 9, 1998, when the SDCHX relief valve lifted).

The licensee noted that failure of an EDG to start would not be a concern because the RCS loop injection valves associated with the failed EDG would not open and cross connect the HPSI trains. However, the inspectors noted that under a condition where an EDG failed to continue running after the RCS loop injection valves had opened due to a safety injection actuation signal, a flow path would be established to pressurize the ECCS suction piping and containment spray pump discharge piping to the SDCHX relief valve setpoint as occurred during the April 9, 1998, Unit 1 test. The inspectors also noted that this event created a release path via the vented RWT through the HPSI pump minimum flow line and a loss of water inventory to the auxiliary building via the SDCHX relief valve and should be evaluated. The licensee stated that it considered this possible event scenario but determined that it was not necessary to consider the failure of a component to continue running as an assumed single failure.

Section 6.3.1, "ECCS Design Bases," of the UFSAR states that, "Adequate physical separation shall be maintained between the redundant piping paths and containment penetrations of the SIS (safety injection system) such that the SIS will meet its functional requirements even with the failure of a single active component during the injection mode, or with a single active failure or a limited leakage passive failure during the recirculation mode."

The bases for TS 3/4.5.2 and 3/4.5.3, "ECCS Subsystems," states, "The operability of two separate and independent ECCS subsystems with the indicated RCS pressure greater than or equal to 1837 psia, or with the indicated RCS cold-leg temperature greater than or equal to 485 °F ensures that sufficient emergency core cooling capability will be available in the event of a LOCA assuming the loss of one subsystem through any single failure consideration."

The inspectors reviewed ANS-51.7/N658-1976, "Single Failure Criteria for PWR Fluid Systems," ANSI/ANS-58.9-1981, "Single Failure Criteria for Light Water Reactor Safety-Related Fluid Systems," and NRC SECY 77-439, "Single Failure Criterion." The inspectors concluded that guidance existed for application of the single failure criterion

that required the proposition that single failures can occur at any time. Therefore, the inspectors concluded that the licensee should have demonstrated that its assessment of consequences had assumed the most limiting single failure.

Online Maintenance

The inspectors asked the licensee if they had performed online maintenance of the HPSI system involving system configurations consisting of an inoperable HPSI pump, the associated discharge isolation valve open, and the associated RCS injection valves operable (i.e., would open on a safety-injection actuation signal). The inspectors also asked if the licensee had considered this configuration as a system vulnerability in its event investigation. The licensee reviewed its maintenance rule database and provided the inspectors a list dating back to 1994, that identified several occasions when online HPSI maintenance was performed that matched this system configuration. The inspectors were concerned that during these online maintenance periods, a single failure was not necessary for degraded HPSI performance during a postulated accident. The inspectors concluded that during these periods of maintenance on the Unit 1 Train "A" HPSI system and Unit 2 Train "B" HPSI system (the trains with the reverse leakage check valves) the licensee was in a condition prohibited by the TSs and that TS 3.0.3 required a unit shutdown. The licensee informed the inspectors that it had not evaluated this system configuration as a vulnerability in its event investigation.

The inspectors reviewed the out-of-service data provided by the licensee and noted that the maintenance activities generally consisted of minor preventive maintenance including oil changes, and valve and breaker maintenance. With respect to maintenance on the Unit 1 Train "A" HPSI system (associated with Valve 1PSIA-V404) and Unit 2 Train "B" HPSI system (associated with Valve 2PSIB-V405) the length of time for each occurrence ranged from as short as 0.92 hours to as long as 19.58 hours.

The out-of-service data indicated that the Unit 1 Train "A" HPSI pump was unavailable when the unit was operating in Mode 1 on September 4, 1996, for 19.58 hours and that no documentation was available to demonstrate that Train "A" was isolated from Train "B." Therefore, the inspectors determined that Unit 1 did not have any independent ECCS subsystem operable when Train "A" of the HPSI system was out of service without isolation from Train "B" of the HPSI system, and Valve 1PSIA-V404 was inoperable. Action was not initiated to place the unit in hot standby within 7 hours as required by TS 3.0.3. This was considered to be the second example of an apparent violation of TS 3.0.3 (50-528/-529/-530/9814-01).

The out-of-service data also indicated that the Unit 2 Train "B" HPSI pump was unavailable when the unit was operating in Mode 1 on October 21, 1994, for 19.8 hours. In this case, a clearance order for WO 6773826 identified that a clearance had been in effect during this period of time that closed the Train "B" HPSI pump discharge isolation valve. The exact length of time that the isolation valve was closed was indeterminate. The inspectors were able to conclude that the isolation valve was closed from between 2.5 to 6.25 hours. When the clearance order was cleared, the Train "B" HPSI pump discharge isolation valve was opened and the Train "B" HPSI pump was still unavailable due to other maintenance. The inspectors determined that Train "B" of the HPSI system

was unavailable during the maintenance activity and was not isolated from Train "A" for a period of 13.5 to 17.3 hours. Therefore, Unit 2 did not have any independent ECCS subsystem operable for a period in excess of 7 hours when Train "B" of the HPSI system was out of service without isolation from Train "A" of the HPSI system, and Valve 2PSIB-V405 was inoperable. Action was not initiated to place the unit in Hot Standby within 7 hours as required by TS 3.0.3. This was considered to be the third example of an apparent violation of TS 3.0.3 (50-528/-529/-530/9814-01).

All other examples of online maintenance of the Unit 1 Train "A" HPSI system and the Unit 2 Train "B" HPSI system were less than 7 hours in duration. Therefore, while the completion of a unit mode change was not required, the licensee failed to recognize the applicability of TS 3.0.3.

c. Conclusions

The misalignment of the Unit 1 and Unit 2 HPSI pump discharge check valves placed the units in a significantly degraded and vulnerable condition with respect to the capability to mitigate the consequences of a LOCA. Two examples of an apparent violation of TS 3.0.3 were identified.

E1.3 Assessment of Generic Implications

a. Inspection Scope

The inspectors reviewed licensee investigation reports, surveillance procedures, and maintenance procedures to determine whether the licensee had adequately addressed the issues of check valve misalignment and inadequate testing practices with respect to other safety-related valves.

b. Observations and Findings

The inspectors questioned whether the licensee had evaluated the generic aspects of the misaligned HPSI pump discharge check valves relative to other safety-related valves. The licensee had performed a study of other check valves. There were 27 Borg-Warner pressure-seal, bonnet-hung check valves installed in each of the three units. None of the valves in this population except for the two HPSI pump discharge check valves per unit had the welded-neck design that appeared most susceptible to the disc-cocking phenomenon. Valves with a forged-neck design did not have vertical alignment variability similar to welded-neck models. The licensee performed a review of the closed-direction exercise tests for the remaining 25 valves per unit and concluded that the testing performed on each valve adequately demonstrated operability. The licensee also examined a 3-inch valve in the maintenance shop and was unable to reproduce the disc-cocking phenomenon, even with the bonnet retaining ring threaded fully into the valve body. During the inspection, the licensee also initiated a generic review of check valve testing practices to evaluate the adequacy of testing.

The inspectors selected a sample of valves to verify that the surveillance tests were adequate to demonstrate valve closure. The valves chosen for this review were the

LPSI cold-leg injection valves (xSIE-V114, xSIE-V124, xSIE-V134, and xSIE-V144, where 'x' is the unit designator) and their associated test, Procedure 73ST-9SI05, "Leak Test of HPSI/LPSI Containment Isolation Check Valves," Revision 4. The test methodology involved pressurizing the downstream side of the valves with a HPSI pump or a hydro test pump and measuring the leak rate on the upstream side. The inspectors determined that the surveillance test was adequate to verify check valve closure.

c. Conclusions

The licensee adequately addressed the generic implications of the misalignment issue to other pressure-seal, bonnet-hung check valves to conclude that no additional operability concerns existed.

E1.4 In-house and Industry OEAs

a. Inspection Scope

The inspectors reviewed licensee in-house and industry OEAs pertinent to the HPSI pump discharge check valves.

b. Observations and Findings

NRC IN 88-70, "Check Valve Inservice Testing Program Deficiencies"

In its January 12, 1989, evaluation of NRC IN 88-70, the licensee identified that reverse flow testing of several check valves, including HPSI pump discharge check Valves 1PSIA-V404 and 2PSIB-V405, was not performed. However, the licensee concluded that because they had an NRC-approved IST program, any changes the program were considered enhancements. The licensee did not give this item a high priority and a due date to add these tests to the program was established for 1996. The licensee's quality assurance organization conducted an audit of the check valve programs in 1992, concluded that this schedule for action was untimely, and identified this as a finding. As corrective action, the licensee initiated action to revise the IST program to include reverse flow testing of the subject valves. Surveillance Procedure 73ST-xXI29, "Section XI Check Valve Operability Verification - Mode 6 - Full Stroke Testing of Safety Injection Check Valves," was approved on July 26, 1992, to conduct the test. The test methodology consisted of measuring forward HPSI flow to the RCS via the hot-leg injection flow path. The HPSI pump discharge check valves were considered operable if an acceptable forward flow was measured to the RCS with one HPSI pump operating while cross connected to the opposite train, but no explicit acceptance criterion was included to determine check valve reverse flow.

10 CFR Part 50, Appendix B, Criterion XVI, "Corrective Action," required that measures shall be established to assure that conditions adverse to quality are promptly identified and corrected and in the case of significant conditions adverse to quality that the measures shall assure that the cause of the condition is determined and corrective action taken to preclude repetition. The test procedures developed in 1992, as a result of the January 12, 1989, evaluation were not adequate to identify excessive reverse

flow, a significant condition adverse to quality (excessive reverse flow through HPSI pump discharge check valves). This was considered to be the fourth example of an apparent violation of 10 CFR Part 50, Appendix B, Criterion XVI (50-528/-529/-530/9814-03).

NRC IN 89-62, "Malfunction of Borg-Warner Pressure Seal Bonnet Check Valves Caused By Vertical Misalignment of Disc"

The licensee performed a review of IN 89-62 and concluded that no action was required. Engineering Action Request (EAR) 89-1931, completed January 26, 1990, concluded that the vendor manuals were adequate and had the necessary steps to ensure original factory-established seat/disc alignment. The licensee's initial screening, documented in an October 9, 1989, memorandum correctly identified that vertical disc/seat misalignment due to incorrect retainer ring position resulted in the problem identified in the IN and that the vendor manual did not include procedure steps for adjusting retainer ring position to achieve the correct alignment. The licensee identified that a review would be performed of check valve maintenance procedures to determine whether a similar problem existed. The licensee documented its evaluation conclusions in the EAR and in a memorandum dated February 15, 1990. The licensee identified that their procedures included instructions for match-marking the valve body and bonnet to ensure alignment of the disc and seat. Therefore, the licensee concluded that procedures contained adequate instructions. This conclusion addressed horizontal alignment concerns but did not consider the vertical misalignment issue and the need to ensure correct retainer ring position.

In 1992, the licensee re-evaluated applicability of IN 89-62 and documented in CRDR 9-2-0412 that its original conclusions were incorrect. The vendor had revised its technical manual in October 1990, which included instructions for measurement of the vertical "A" dimension (top of retainer ring to top of valve body) before and after maintenance. Borg-Warner issued a clarification to its Technical Alert 8909-77-001 (which addressed the vertical seat alignment issue) in a letter to the licensee dated July 8, 1992. The letter stated that the vertical alignment problem was limited to welded-neck check valves (such as Valve 1PSIA-V404) and that the welding of the neck to the body had caused the neck to shrink down, thus causing the bonnet disc assembly to sit lower in the valve body and possibly not seat properly on the valve seat. The licensee issued Procedure 31MT-9ZZ17 on November 30, 1992, which included the Borg-Warner technical alert instructions regarding permanent match marks for horizontal orientation and measurement of the "A" dimension. The licensee's February 15, 1990, evaluation failed to correct an inadequate maintenance procedure for establishing the correct vertical alignment of the valve disc within the valve body of Borg-Warner check valves. The resultant excessive reverse flow through HPSI pump discharge check valves was considered to be a significant condition adverse to quality. This was considered to be the fifth example of an apparent violation of 10 CFR Part 50, Appendix B, Criterion XVI (50-528/-529/-530/9814-03).

c. Conclusion

The inspectors considered the licensee's OEAs and corrective actions regarding Borg-Warner check valves to have been inadequate in preventing or detecting, in a timely manner, significant conditions adverse to quality relative to the HPSI system. Two examples of an apparent violation of 10 CFR Part 50, Appendix B, Criterion XVI, were identified.

E8 Miscellaneous Engineering Issues

E8.1 Review of Licensee's Followup and Significant Investigation Report

a. Inspection Scope

The inspectors reviewed the licensee's activities to assess, evaluate, and correct the degraded HPSI system and any potential impact on other safety-related systems. Included in the review was Significant Investigation Report CRDR 1-8-0238, "Excessive Leakage Through HPSI Pump Discharge Check Valve 1PSIA-V404," Revision 0, June 10, 1998. The licensee completed Revision 1 of the report on July 10, 1998, but the inspectors did not perform a detailed review of the report because it was completed following the onsite portion of the inspection.

b. Observations and Findings

CRDR 1-8-0238 was initiated to evaluate the April 9, 1998, failure of Valve 1PSIA-V404 to satisfy its reverse-flow acceptance criteria. On April 10, 1998, the CRDR review committee classified the subject CRDR as significant. An investigation team was assembled to evaluate the event. The inspectors reviewed the licensee's significant investigation report dated June 10, 1998. The licensee performed a thorough historical review of past testing and maintenance practices. The report identified the root cause of the failure of the check valve to be attributed to a common-cause error in assembling the valves stemming from inadequate maintenance instructions. Periodic surveillance testing was ineffective in identifying excessive reverse flow. The root cause of the inadequate surveillance test was an ineffective testing configuration developed by engineering. Missed opportunities to identify and correct problems with the check valves also existed in the form of in-house and industry operating experience reviews.

Revision 0 of the report identified the need for 20 corrective actions associated with this event. As of June 12, 1998, three of the corrective actions had been completed. A schedule for the remaining corrective actions had been developed with planned completion dates ranging from June 21, 1998, through the Unit 3 1998, and Unit 2 1999, refueling outages.

The inspectors noted that the investigation did not identify any problems regarding operator performance with respect to the October 1997, Unit 2 outages or the May 1998, entries into TS 3.0.3. Also, the report did not evaluate the safety consequences

of performing routine online maintenance of the Unit 1 and Unit 2 HPSI systems when the HPSI trains were not isolated from each other.

The licensee informed the inspectors that additional assessment of the safety significance of the degraded HPSI condition would be performed and the results of the assessment would be documented in the LER supplement.

c. Conclusions

The licensee's investigation report was objective and provided a candid self-assessment of its performance; however, it did not evaluate inspector-identified issues in the areas of operations or online maintenance.

V Management Meetings

X1 Exit Meeting Summary

The inspectors met with licensee representatives on June 11, 1998, to conduct a technical debrief prior to leaving the site. Following additional in-office inspection, and telephonic discussions of findings, the inspectors conducted an exit meeting with licensee representatives on July 21, 1998. These representatives acknowledged the findings presented, but disagreed with the May 13, 1998, apparent violation of TS 3.0.3. The licensee stated that operations recognized that Valve 1PSIA-V404 was in a degraded condition but information existed to conclude that the valve was operable until testing could determine otherwise. With respect to Unit 2, the licensee stated that operations also recognized that Valve 2PSIB-V405 was in a degraded condition but information existed to conclude that the valve was operable until testing could determine otherwise.

The inspectors asked the licensee representatives whether any materials examined during the inspection should be considered proprietary. No proprietary information was identified.

ATTACHMENT 1

SUPPLEMENTAL INFORMATION

PARTIAL LIST OF PERSONS CONTACTED

Licensee

G. Andrews, Section Leader, STA/Operations
B. Blackmore, Engineer
P. Borchert, Site Manager, Operations
J. Brown, Engineer
R. Buzzard, Senior Consultant, Regulatory Affairs
D. Carnes, Unit 1 Department Leader, Operations
D. Fan, Acting Department Leader, System Engineering
R. Fullmer, Director, Nuclear Assurance
R. Hazelwood, Senior Engineer, Nuclear Regulatory Affairs
W. Ide, Vice President, Nuclear Engineering
A. Krainik, Department Leader, Regulatory Affairs
J. Levine, Senior Vice President, Nuclear
D. Marks, Section Leader, Nuclear Regulatory Affairs
D. Mauldin, Director, Maintenance
D. Oakes, Section Leader, Specialty Engineering
K. Parrish, Section Leader, Transient Analysis
G. Shanker, Department Leader, Specialty Engineering
D. Smith, Director, Operations
N. Spooner, Engineer
P. Wiley, Unit 2 Department Leader, Operations

NRC

M. Fields, Project Manager, Office of Nuclear Reactor Regulation
J. Shackelford, Senior Reactor Analyst, Region IV

INSPECTION PROCEDURES USED

93702 Prompt Onsite Response to Events at Operating Power Reactors

ITEMS OPENED, CLOSED, and DISCUSSED

Opened

50-528/-529/-530/9814-01	APV	Three examples of an apparent violation of TS 3.0.3 involving: 1) failure to initiate actions within 1 hour to place Unit 1 in a mode in which TS 3.5.2 did not apply on May 13, 1998 (Section O1.1); failure to initiate actions to place the unit in hot standby within 7 hours when Unit 1 did not have an independent ECCS subsystem operable on September 4, 1996 (Section E1.2); and 3) failure to initiate actions to place the unit in hot standby within 7 hours when Unit 2 did not have an independent ECCS subsystem operable on October 21, 1994 (Section E1.2).
50-528/-529/-530/9814-02	APV	Two examples of an apparent violation of TS 6.8.1 involving: 1) failure to record in the Unit 2 log an unexpected decrease in SIT level on October 10, 1997 (Section E1.1.b.1); and 2) failure to record in the Unit 2 log an unexpected decrease in SIT level on October 28, 1997 (Section E1.1.b.1).
50-528/-529/-530/9814-03	APV	Five examples of an apparent violation of 10 CFR Part 50, Appendix B, Criterion XVI involving: 1) failure to identify and promptly correct excessive HPSI pump discharge check valve excessive reverse flow leakage following an unexpected decrease in SIT level on October 10, 1997 (Section E1.1.b.1); 2) failure to identify and promptly correct excessive HPSI pump discharge check valve excessive reverse flow leakage following an unexpected decrease in SIT level on October 28, 1997 (Section E1.1.b.1); 3) failure to correctly assemble the Unit 1 Train "A" HPSI pump discharge check valve to correct a reverse flow leakage condition on April 10, 1998 (Section E1.1.b.2); 4) failure to develop adequate test procedures to identify and correct HPSI pump discharge check valve excessive reverse flow following evaluation of IN 88-70 (Section E1.4); and 5) failure to correct inadequate maintenance procedures for establishing the correct assembly of Borg-Warner check valves following evaluation of IN 89-62 (Section E1.4).
50-528/-529/-530/9814-04	URI	Check valve design control issues (Sections E1.1.b.2, E1.1.b.3, and E1.1.b.5).

50-528/-529/-530/9814-05	APV	Two examples of an apparent violation of TS 3.5.2 involving: 1) failure to have an independent operable flow path for the Unit 1 Train "B" HPSI system from May 1, 1992 through May 15, 1998 (Section E1.1.b.2); and 2) failure to have an independent operable flow path for the Unit 2 Train "A" HPSI system from April 14, 1993 through May 16, 1998 (Section E1.1.b.4).

Closed

None

LIST OF ACRONYMS USED

APV	apparent violation
ASME	American Society of Mechanical Engineers
CFR	Code of Federal Regulations
CS	containment spray
CRDR	Condition Report/Disposition Request
EAR	Engineering Action Request
ECCS	emergency core cooling system
EDG	emergency diesel generator
EDT	equipment drain tank
EOP	emergency operating procedure
gpm	gallons per minute
HPSI	high-pressure safety injection
IN	Information Notice
IST	Inservice Testing
LCO	Limiting Condition for Operation
LER	licensee event report
LOCA	loss-of-coolant accident
LPSI	low-pressure safety injection
NRC	U.S. Nuclear Regulatory Commission
OEA	operating experience assessment
OD	operability determination
psia	pounds force per square inch absolute
psid	pounds force per square inch differential
psig	pounds force per square inch gage
RCS	reactor coolant system
RWT	refueling water tank
SDCHX	shutdown cooling heat exchanger
SIS	safety injection system
SIT	safety injection tank
TS	Technical Specification
UFSAR	Updated Final Safety Analysis Report
URI	Unresolved Item

LIST OF DOCUMENTS REVIEWED

Procedures

NUMBER	DESCRIPTION	REVISION
73DP-9XI01	Pump and Valve Inservice Testing Program - Component Tables	Revision 5
73DP-9XI02	Pump and Valve Inservice Testing Program - Administrative Requirements	Revision 5
73ST-9XI33	HPSI Pump and Check Valve Full Flow Test	Revision 9
73ST-9XI33	HPSI Pump and Check Valve Full Flow Test	Revision 10
73ST-9XI33	HPSI Pump and Check Valve Full Flow Test	Revision 11
73ST-9XI35	HPSI Pump Discharge Check Valve Closed Exercise Test	Revision 6
31MT-9ZZ17	Disassembly and Assembly of Borg-Warner Check Valves	Revision 1
31MT-9ZZ17	Disassembly and Assembly of Borg-Warner Check Valves	Revision 4
31MT-9ZZ17	Disassembly and Assembly of Borg-Warner Check Valves	Revision 5
73ST-9ZZ25	Check Valve Disassembly, Inspection, and Manual Exercise	Revision 2
73ST-9SI01	ECCS Flow Balance Test	Revision 7
40OP-9SI02	Recovery from Shutdown Cooling to Normal Operating Lineup	Revision 14

73ST-9SI05	Leak Test of HPSI/LPSI Containment Isolation Check Valves	Revision 4
73ST-9SI05	Leak Test of HPSI/LPSI Containment Isolation Check Valves	Revision 3
40EP-9EO03	Loss of Coolant Accident	Revision 5
40EP-9EO09	Functional Recovery	Revision 6

Calculations

NUMBER	DESCRIPTION	REVISION
13-MA-SI-982	Evaluation of Allowable Leak Rate Criteria for 1,2,3PSIA-V404 and 1,2,3PSIB-V405/Assessment of As-Found Leakage for 2PSIB-V405/1PSIA-V404	Revision 0
13-MC-SI-215	Revised Single HPSI Pump Delivery Curve for Cold Leg Injection and Flow Rate Requirements for Technical Specification 4.5.2.h	Revision 1

Drawings

NUMBER	DESCRIPTION	REVISION
01-M-SIP-001	Safety Injection and Shutdown Cooling System	Revision 22
01-M-SIP-002	Safety Injection and Shutdown Cooling System	Revision 21
79120	Valve Assembly- 4 inch, 1500 LB, swing check valve	Revision C

Condition Report/Disposition Requests

NUMBER	DESCRIPTION	REVISION
1-5-0131	Valve 1PSIEV113 failed seat leakage test	May 22, 1995
9-2-0412	Incorrect conclusion in review of IN 89-62	July 6, 1992
9-8-0893	Design configuration documents not updated	June 5, 1998
2-7-0420	SIT level dropped during cold-leg boration	October 28, 1997
1-8-0238	Valve 1PSIA-V404 failed reverse-flow leakage test	April 10, 1998
2-8-0128	Evaluate excessive check valve back leakage	April 16, 1998

Operability Determinations

NUMBER	DESCRIPTION	REVISION
203	Evaluation of piping operability after pressurization	April 12, 1998
204	Evaluation of HPSI operability	May 22, 1998

Work Orders

Deficiency Work Order 836600 and Work Orders 840712 and 840826 associated with the assembly and disassembly of 1PSIA-V404.

Other Documents

NUMBER	DESCRIPTION	REVISION
Significant Investigation Report CRDR 1-8-0238	Excessive Leakage Through HPSI Pump Discharge Check Valve 1PSIA-V404, Revision 0	June 10, 1998

Significant Investigation Report CRDR 1-8-0238	Excessive Leakage Through HPSI Pump Discharge Check Valve 1PSIA-V404, Revision 1	July 10, 1998
Reportability Determination	HPSI Discharge Check Valves	May 21, 1998
316-42-WEW/EDF	Memorandum Regarding IN 88-70 Evaluation	August 31, 1990
109-374-RAK/GLI/TNW	Memorandum Regarding IN 88-70 Evaluation	January 12, 1989
167-460-ECS/RRR	Memorandum Regarding IN 89-62 Evaluation	October 9, 1989
161-2874-ACR/RAB/DAF	Memorandum Regarding IN 89-62 Evaluation	February 15, 1990
162-8368-KCP/PMC	Memorandum Regarding HPSI Safety Assessment	May 20, 1998
281-2103-MAR/JAB	Memorandum Regarding Check Valve Leakage Criteria	May 14, 1998
Simulator Training Scenario	LOCA with Degraded HPSI Flow	July 14, 1998
Clearance Order for WO 6773826		October 21, 1994
Individual Plant Examination		April 7, 1992

ATTACHMENT 2

SIMPLIFIED HPSI FLOW DIAGRAM

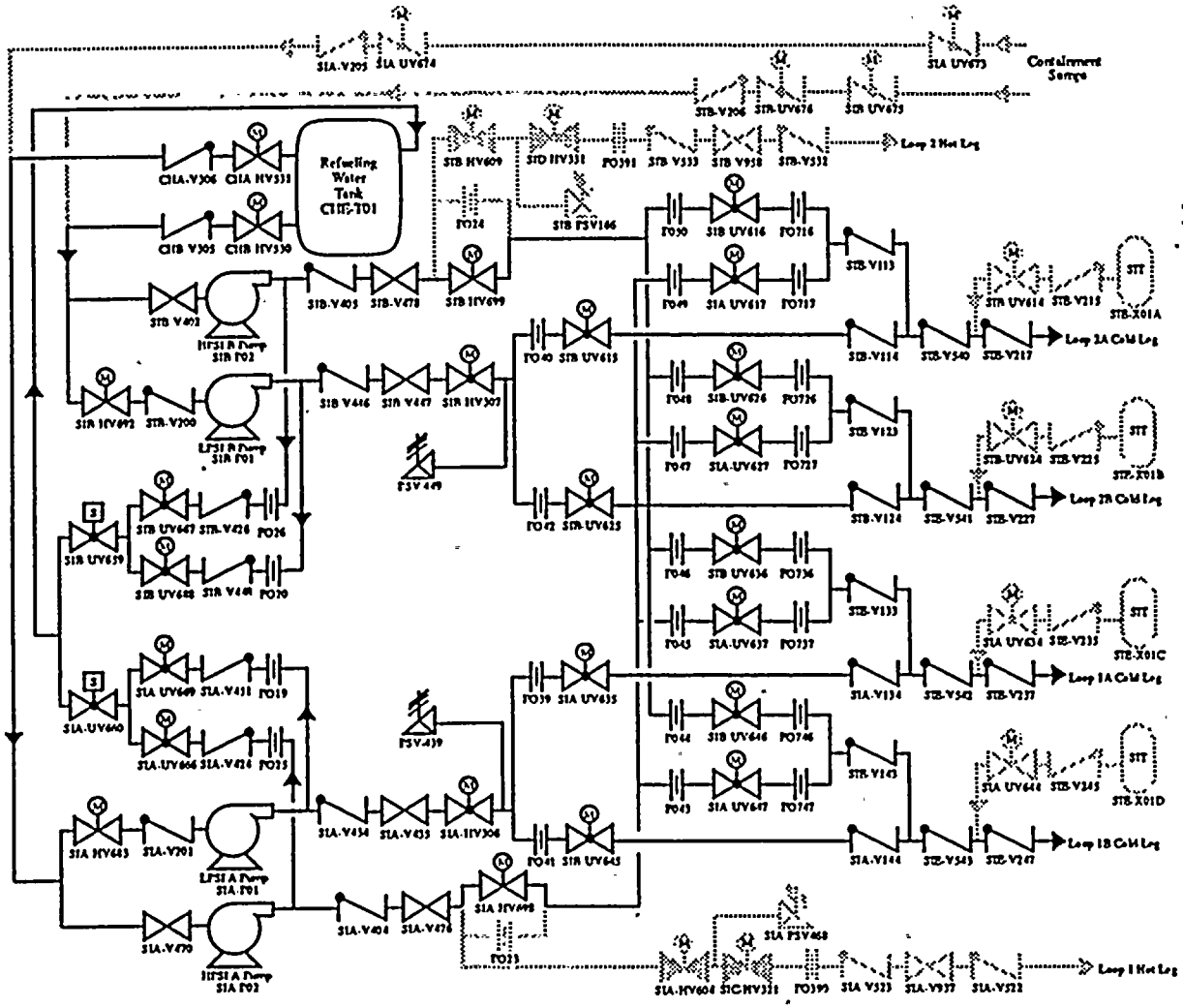

Figure 5.2-1

High/Low Pressure Safety Injection System

ATTACHMENT 3

DEGRADED HPSI FLOW PROFILE

CALCULATION SHEET

CALC. TITLE	EVALUATION OF ALLOWABLE LEAK RATE TEST CRITERIA FOR 1,2,3SIA-V-404 AND 1,2,3SIB-V-405	CALC. NO	13-MA-SI-982
		SHEET NO.	39

REV	ORIGINATOR	DATE	INDEPENDENT VERIFICATION	DATE	REV	ORIGINATOR	DATE	INDEPENDENT VERIFICATION	DATE
0	J. A. BROWN	6/7/98	J. D. HUGHEY	6/7/98					

Rev. Indi-cator ←

FIGURE 15
FINAL DEGRADED HPSI FLOW
UNIT 2 TRAIN A