PRIORITY 2

REGULATORY INFORMATION DISTRIBUTION SYSTEM (RIDS)

ACCESSION NBR:9412290093 DOC.DATE: 94/12/22 NOTARIZED: YES DOCKET #
FACIL:STN-50-528 Palo Verde Nuclear Station, Unit 1, Arizona Publi 05000528
STN-50-529 Palo Verde Nuclear Station, Unit 2, Arizona Publi 05000529
STN-50-530 Palo Verde Nuclear Station, Unit 3, Arizona Publi 05000530
AUTH.NAME AUTHOR AFFILIATION
STEWART,W.L. Arizona Public Service Co. (formerly Arizona Nuclear Power
RECIP.NAME RECIPIENT AFFILIATION
Document Control Branch (Document Control Desk)

See Report

SUBJECT: Forwards response to followup to request for addl info regarding GL-92-08,issued pursuant to 10CFR50.54(f) on 931221 for plant,units 1,2 & 3.

DISTRIBUTION CODE: A029D COPIES RECEIVED:LTR 1 ENCL 1 SIZE: 62
TITLE: Generic Letter 92-008 Thermal-Log 330 Fire Barrier

NOTES:STANDARDIZED PLANT 05000528
Standardized plant. 05000529
Standardized plant. 05000530

	RECIPIENT ID CODE/NAME	COPIES LTTR	COPIES ENCL	RECIPIENT ID CODE/NAME	COPIES LTTR	COPIES ENCL
	PD4-2 LA	1	0	PD4-2 PD	1	1
	HOLIAN, B	1	1	TRAN,L	1	1
INTERNAL:	FILE CENTER 01	1	1	NRR/DE/EELB	1	1
	NRR/DRPW/PD3-1	1	1	NRR/DSSA/SPLB	2	2
	RGN4 FILE	1	1			
EXTERNAL:	NOAC	1	1	NRC PDR	1	1

P R I O R I T Y 2 D O C U M E N T

NOTE TO ALL "RIDS" RECIPIENTS:

PLEASE HELP US TO REDUCE WASTE! CONTACT THE DOCUMENT CONTROL DESK, ROOM P1-37 (EXT. 504-2083) TO ELIMINATE YOUR NAME FROM DISTRIBUTION LISTS FOR DOCUMENTS YOU DON'T NEED!

TOTAL NUMBER OF COPIES REQUIRED: LTTR 12 ENCL 11

MA-2

Arizona Public Service Company
P.O. BOX 53999 • PHOENIX, ARIZONA 85072-3999

WILLIAM L. STEWART
EXECUTIVE VICE PRESIDENT
NUCLEAR

102-03211-WLS/SAB/NLT
December 22, 1994

U. S. Nuclear Regulatory Commission
ATTN: Document Control Desk
Mail Station P1-37
Washington, DC 20555

References: 1) Letter dated September 23, 1994, from Roy P. Zimmerman, Associate Director for Projects, Office of Nuclear Reactor Regulation, NRC, to William L. Stewart, Executive Vice President, Nuclear, APS

2) Letter dated February 7, 1994, from W. F. Conway, Executive Vice President, Nuclear, APS, to USNRC

3) Letter dated December 21, 1993, from L. J. Callan, Acting Associate Director for Projects, Office of Nuclear Reactor Regulation, NRC, to W. F. Conway, Executive Vice President, Nuclear, APS

Dear Sirs:

Subject: Palo Verde Nuclear Generating Station (PVNGS)
Units 1, 2, and 3
Docket Nos. STN 50-528/529/530
Response to the Follow-up to the Request for Additional Information Regarding Generic Letter 92-08, Issued Pursuant to 10 CFR 50.54(f) on December 21, 1993
File: 94-003-726; 94-010-026

By letter dated September 23, 1994 (Reference 1), the NRC required that Arizona Public Service Company (APS), pursuant to 10 CFR 50.54(f), submit additional information regarding Generic Letter (GL) 92-08, "Thermo-Lag 330-1 Fire Barriers." Enclosed with this letter is a written report which provides an update to the information originally provided to the NRC in letter dated February 7, 1994 (Reference 2), in response to the NRC Request for Additional Information (RAI) to GL 92-08 issued on December 21, 1993 (Reference 3). To facilitate NRC review, APS is submitting this report as Revision 1 of the report included in Reference 2.

In the September 23, 1994 letter (Reference 1) the NRC stated that it is their view that the unresolved technical issues regarding ampacity derating can be resolved independently of the fire endurance issues. APS acknowledges the need to resolve the

280006

9412290093 941222
PDR ADOCK 05000528
P PDR

A029

issues regarding ampacity derating independently from the fire endurance issues and will be pursuing the ampacity derating issue separately. However, the APS response to Section IV, "Ampacity Derating" in the enclosed report, provides an update to the original response on the overall resolution strategy.

Additionally, in the Reference 1 NRC follow-up letter, the NRC referenced the APS response to Section V provided in the February 7, 1994 letter (Reference 2), and stated that APS was "considering using a performance-based approach, such as probabilistic safety or risk assessment, to achieve compliance with NRC fire protection requirements in areas that contain Thermo-Lag." The Reference 1 follow-up letter requested that APS revise the Section V response to the RAI accordingly. APS has revised that portion of Section V. However, since NRC approved deviations, which are performance based, are in effect for Thermo-Lag, additional analysis may be used to verify and validate that existing deviation performance parameters can still be met.

Should you have any questions, please contact Scott A. Bauer at (602) 393-5978.

Sincerely,

E C Simpson
for W.L. Stewart

WLS/SAB/NLT/rv

Enclosure

cc: L. J. Callan
K. E. Perkins
B. E. Holian
K. E. Johnston

STATE OF ARIZONA)
) ss.
COUNTY OF MARICOPA)

I, E. C. Simpson, represent that I am Vice President - Nuclear Support, that the foregoing document has been signed by me on behalf of Arizona Public Service Company with full authority to do so, that I have read such document and know its contents, and that to the best of my knowledge and belief, the statements made therein are true and correct.

E. C. Simpson

Sworn To Before Me This 22 Day Of December, 1994.

Roxanna VanDillen
Notary Public

My Commission Expires

My Commission Expires June 12, 1997

ROXANNA VANDILLEN
NOTARY PUBLIC
MARICOPA COUNTY, ARIZONA

ENCLOSURE

REVISION 1 RESPONSE

TO THE REQUEST FOR

ADDITIONAL INFORMATION REGARDING

GENERIC LETTER 92-08,

PURSUANT TO 10 CFR 50.54(f)

9412290093

Revision 1 Response to the Request for Additional Information Regarding Generic Letter 92-08, Pursuant to 10 CFR 50.54(f)

I. THERMO-LAG FIRE BARRIER CONFIGURATIONS AND AMOUNTS

NRC REQUIRED INFORMATION ITEM I.B.1

Describe the Thermo-Lag 330-1 barriers installed in the plant to

a. Meet 10 CFR 50.48 or Appendix R to 10 CFR Part 50
b. Support an exemption from Appendix R
c. Achieve physical independence of electrical systems
d. Meet a condition of the plant operating license
e. Satisfy licensing commitments

The description should include the following information: the intended purpose and fire rating of the barrier (for example, 3-hour fire barriers, 1-hour fire barrier, radiant energy heat shield), and the type and dimension of the barrier (for example, 8-ft by 10-ft wall, 4-ft by 3-ft by 2-ft equipment enclosure, 36-inch-wide cable tray, or 3-inch-diameter conduit).

APS RESPONSE TO ITEM I.B.1

a. PVNGS uses Thermo-Lag 330-1 fire-rated barriers to meet the requirements of 10 CFR 50.48 and APS commitments to 10 CFR 50, Appendix R, Section III.G. In addition, a Thermo-Lag 330-1 barrier is used as a radiant energy heat shield inside containment to meet the APS commitments to 10 CFR 50, Appendix R, Section III.G.

   The total population of Thermo-Lag barriers relied upon at PVNGS has been decreased by approximately 80% by surface area (see APS response Item III.B.2) relative to Revision 0 of this report.

   Attachment A to this enclosure provides the intended purpose, fire rating, and the approximate dimensions for Thermo-Lag 330-1 fire-rated raceway configurations that are installed to meet APS commitments to 10 CFR 50, Appendix R.

   Attachment B to this enclosure provides the intended purpose, fire rating, and approximate dimensions for Thermo-Lag 330-1 configurations that are installed on heating, ventilation, and air conditioning (HVAC) and cable tray supports that penetrate through structures or walls which are subject to APS commitments to 10 CFR 50, Appendix R. The barriers are

constructed to 3-hour "box" configurations around unistrut support members. The individual dimensions for each support member may be different. Generally the overall "box" dimension for the unistrut members is approximately 6-inches by 7-inches.

Attachment C to this enclosure provides generic diagrams for each of the 11 typical configurations installed at PVNGS. The typical generic diagrams only apply to raceway configurations and 7 of the 12 diagrams depict those utilized to meet APS commitments to 10 CFR 50, Appendix R, and are referenced in Attachment A.

Please note the configuration identification numbers used in Attachments A and B are in-process identification numbers which are used to facilitate the evaluation of individual Thermo-Lag installations.

PVNGS has a radiant energy heat shield in each PVNGS unit for the Train A pressurizer auxiliary spray circuitry and Thermo-Lag 330-1 material is installed around conduit to provide separation. PVNGS is not committed to an hourly-rated barrier for its radiant energy heat shield; however, the barriers are conduit and junction box enclosures and are constructed similar to a 1-hour fire-rated barrier. Since the radiant energy heat shield is not fire rated, the specific dimensional parameters are not relevant to the acceptability of the radiant energy heat shield.

b. As stated in the Palo Verde Safety Evaluation Report, NUREG-0857, dated November 1981, the 10 CFR 50, Appendix R rule does not apply to PVNGS Units 1, 2, and 3. Although this fire protection rule does not apply to PVNGS, APS has committed to implement Sections III.G, III.J, and III.O of Appendix R. Exemption requests are not required for plants licensed post January 1, 1979, as specified in GL 86-10, and thus are not required for PVNGS. However, deviations from the commitments in the PVNGS Updated Final Safety Analysis Report (UFSAR) are identified and justified in the UFSAR in accordance with GL 86-10.

PVNGS has identified three deviations which utilize Thermo-Lag in the context of this question. The deviations, which have been reviewed and approved by the NRC, are identified as follows:

1. The UFSAR, Section 9B.2.1.1.B.6, discusses a deviation from Section III.G.2 to the extent that it requires 3-hour rated barriers to separate circuits of redundant trains in the 100-foot elevation of the Control Building.

2. The UFSAR, Section 9B.2.12.1.B.2, discusses a deviation from Section III.G.2 to the extent that Section III.G.2 requires a 1-hour fire barrier between redundant safe shutdown equipment in addition to fire detection and automatic fire suppression in the 100 foot elevation of the Main Steam Support Structure (MSSS).

3. The UFSAR, Section 9B.2.15.1.B.8, discusses a deviation from Section III.G.2 to the extent that it requires either a 1-hour rated barrier or separation by a horizontal distance of 20 feet or more without intervening combustibles and fire detection and suppression in the Auxiliary Building.

Some of the barriers credited in the above deviations are no longer required for compliance to PVNGS fire protection commitments. The Thermo-Lag 330-1 fire barriers that are required and are part of the justification for the listed deviations are a sub-group of those barriers described in Attachment A.

c. The UFSAR, Section 1.8, describes the PVNGS commitment to Regulatory Guide 1.75, "Physical Independence of Electrical Systems," Rev. 1, dated January 1975. PVNGS uses Thermo-Lag 330-1 to meet, in part, the separation requirement set forth in Regulatory Guide 1.75. The location of these barriers are identified on unit-specific drawings. The barriers are conduit, cable drop, and cable tray enclosures. The barriers are constructed similar to 1-hour rated fire barrier "box" enclosures. Since the Regulatory Guide 1.75 Thermo-Lag barriers are not fire rated, the specific dimensional parameters are not relevant to the acceptability of each Regulatory Guide 1.75 installation as a separation barrier.

d. Thermo-Lag barriers described in APS' response to Item I.B.1.a are relied upon in the implementation of the Fire Protection Program. The implementation of the Fire Protection Program is a condition of the following PVNGS operating licenses:

1. PVNGS Unit 1 License NPF-41, Section 2.C.7

2. PVNGS Unit 2 License NPF-51, Section 2.C.6

3. PVNGS Unit 3 License NPF-74, Section 2.F

e. As specified in the PVNGS UFSAR, the fire protection system shall be designed to minimize, consistent with other safety requirements, the effects of fires on structures, systems, and components important to safety, in accordance with 10 CFR 50, Appendix A, General Design Criterion 3, Fire

Protection; 10 CFR 50, Appendix R, Part III, Sections G, J, and O; and Appendix A to Branch Technical Position APCSB 9.5-1.

The barriers previously described in the response to I.B.1.a constitute the majority of the Thermo-Lag 330-1 barriers installed in the plant which are utilized to satisfy licensing commitments. Thermo-Lag 330-1 barriers are also installed on HVAC and cable tray supports to meet the requirements of BTP APCSB 9.5-1, Appendix A, and are included in the Attachment B list. These barriers are constructed to 3-hour "box" configurations around the unistrut support members. The individual dimensions for each support member may vary; however, the generic overall box dimension for the unistrut members is approximately 6-inches by 7-inches.

NRC REQUIRED INFORMATION ITEM I.B.2

For the total population of Thermo-Lag fire barriers described under Item I.B.1, submit an approximation of:

a. For cable tray barrier: the total linear feet and square feet of 1-hour barriers and the total linear feet and square feet of 3-hour barriers.

b. For conduit barriers: the total linear feet of 1-hour barriers and the total linear feet of 3-hour barriers.

c. For all other fire barriers: the total square feet of 1-hour barriers and the total square feet of 3-hour barriers.

d. For all other barriers and radiant energy heat shields: the total linear or square feet of 1-hour barriers and the total linear or square feet of 3-hour barriers, as appropriate for the barrier configuration or type.

APS RESPONSE TO ITEM I.B.2

The total population of Thermo-Lag barriers relied upon at PVNGS Units 1, 2, and 3, has been decreased by approximately 80% by surface area (see APS response Item III.B.2). The following information describes the remaining Thermo-Lag barriers at PVNGS Units 1, 2, and 3, which are required as described in NRC Item I.B.1, and reflects the total population in the 3 units combined:

a. PVNGS does not have 1-hour or 3-hour barriers required for cable trays.

b. PVNGS has approximately 705 linear feet which translates to approximately 2035 square feet of Thermo-Lag 330-1 installed for 1-hour conduit barriers. PVNGS does not have 3-hour barriers required for conduit.

c. PVNGS has approximately 820 square feet of Thermo-Lag 330-1 installed for 3-hour HVAC & cable tray support barriers. Additionally, approximately 625 square feet of Thermo-Lag 330-1 is installed for 1-hour junction box barriers. PVNGS does not have 3-hour barriers required for junction boxes.

d. PVNGS does not have 1-hour or 3-hour barriers which are utilized as "other" barriers in this context. As stated in the response to NRC Items I.B.1.a and I.B.1.c, the radiant energy heat shields and Regulatory Guide 1.75 Thermo-Lag barriers are not fire rated. PVNGS has approximately 230 linear feet which translates to approximately 460 square feet of radiant energy heat shield Thermo-Lag 330-1 for conduits and approximately 250 square feet for junctions boxes. PVNGS has approximately 3000 linear feet of Regulatory Guide 1.75 Thermo-Lag enclosures.

II. IMPORTANT BARRIER PARAMETERS

NRC REQUIRED INFORMATION ITEM II.B.1

State whether or not you have obtained and verified each of the aforementioned parameters for each Thermo-Lag barrier installed in the plant. If not, discuss the parameters you have not obtained or verified. Retain detailed information on site for NRC audit where the aforementioned parameters are known.

APS RESPONSE TO ITEM II.B.1

Attachment D provides a delineation of those parameters listed in the NRC discussion presented in Section II of Reference 3, which have been obtained and verified by PVNGS for each fire-rated Thermo-Lag barrier. As stated in the responses to NRC Items I.B.1.a and I.B.1.c, the radiant energy heat shields and regulatory Guide 1.75 Thermo-Lag barriers are not fire rated. All applicable barrier parameters have been obtained and verified as delineated in Attachment D. Please note that Attachment D, notes 5, 6, and 7, reflect the fact that Thermo-Lag 330-1 barriers are no longer required on cable trays at PVNGS and those parameters are no longer applicable. Additionally, Attachment D delineates which cable parameters have been obtained and verified at PVNGS. The cable parameters which have not been obtained and verified are not required to qualify conduit or junction boxes protected by Thermo-Lag 330-1, as provided in Generic Letter 86-10, Supplement 1 guidance, and are no longer applicable.

Nuclear Energy Institute (NEI) (previously NUMARC) issued Revision 1 of the NEI Application Guide for Evaluation of Thermo-Lag 330 Fire Barrier Systems on July 7, 1994. NEI has identified, through evaluation of actual fire tests, the critical

performance parameters of Thermo-Lag installation techniques. The performance parameters provided by the NEI in the Application Guide are in two categories; commodity and barrier. The parameters identified by NEI are a subset of the parameters Section II of Reference 3 parameters with 1 exception. NEI has identified an additional barrier parameter which pertains to the internal support mechanisms. PVNGS has obtained and verified all 5 of the NEI commodity performance parameters and 14 of the 15 NEI barrier performance parameters. The 1 NEI barrier performance parameter not obtained and verified is the internal support mechanisms parameter.

The interface between Thermo-Lag materials and other fire-barrier materials at PVNGS is between a penetration seal in a wall or floor/ceiling barrier and the Thermo-Lag configuration on a raceway. The configurations have flanges that extend beyond the penetration's perimeter and covers the penetration.

PVNGS has panels supplied by Thermal Science Inc. (TSI) and panels which were fabricated at PVNGS. PVNGS manufactured panels to maintain sufficient inventory for continuous installation. The number of panels fabricated at PVNGS is believed to be small but the identification number and the specific installed location of these panels is unknown.

The site fabricated panels were constructed using TSI materials, Thermo-Lag 330-1 Subliming Coating - trowel grade and Thermo-Lag Stress Skin Type 330-69, purchased directly from TSI. PVNGS fabricated 1/2" panels only. The Thermo-Lag 330-1 subliming material was provided with a Certificate of Analysis from TSI that certified the material had been tested and did comply with the listed TSI specification. The analysis provides the weight per gallon and Ph for each lot number of each purchase order and compares the results to TSI's specification. Only material that complied with TSI's specification was supplied. PVNGS purchased material directly from TSI with Certificates of Conformance and/or Certificate of Analysis from TSI. The testing performed by NEI has shown that the chemical composition of random panels from the industry are the same. It is reasonable to assume PVNGS's panels are chemically similar to those tested by NEI.

The panels were fabricated at PVNGS using the subcontractor, Insulation Services, Inc., installation instructions, and the verbal instructions from TSI's technical representative. Quality assurance surveillance reports show that Bechtel provided quality assurance oversight on the fabrication of these panels. Bechtel's QC verified the requirements of minimum thickness of the panels, temperature control of the area and the fabrication shop housekeeping.

NEI has analyzed twelve samples of Thermo-Lag materials by Pyrolysis Gas Chromatography. The samples were from the NEI (NUMARC) testing program

and three different utilities to ensure consistency of chemical make-up. The results show that from sample to sample the material is the same. It is reasonable to assume that the 12 panels were manufactured from different random lot numbers.

The original parameters for meeting TSI specifications are the minimum thickness and weight. The thickness of the panels was verified by ISI/Bechtel Q.C. The weight of the pre-fabricated panel from TSI was specified for seismic considerations and not for the fire-rated performance of the panel. Fire testing has shown that if the panel has more material the performance of the fire barrier would be more efficient. The panels from TSI had their thickness checked first and then were weighed to meet the TSI specification for lbs/sq. ft. TSI specifies 3.5 lbs/sq. ft. for 1/2" panels, 7 lbs/sq. ft. for 1" panels and a density of 78 lbs/cu. ft. for trowel grade material. This specific weight was to allow the utilities to design plant components for supporting the Thermo-Lag material.

PVNGS does not have documentation to show that the weights of the site manufactured panels were determined before installation. The verification of the minimum thickness provides a high level of confidence that the specified weight of the 1/2" panel is within the TSI specifications. The density of the trowel grade material used by PVNGS to fabricate their panels was 78 lbs/cu. ft. The 1/2" panels of Thermo-Lag material would weigh approximately 3.25 lbs/sq. ft. Adding the weight of the stress skin, the site fabricated panel weight would be approximately the same as the TSI panels (3.5 lbs/sq. ft).

The qualification of PVNGS fire-rated Thermo-Lag enclosures will be addressed in the reports from the recent fire tests conducted by NEI, Texas Utilities, Tennessee Valley Authority and from any tests that PVNGS may perform in the future. The tests already performed by NEI, TU and TVA have used Thermo-Lag supplied by TSI. Any fire tests performed by PVNGS will also use materials supplied by TSI.

Although PVNGS did not have a specific procedure to fabricate Thermo-Lag panels on site, the PVNGS site-fabricated Thermo-Lag panels' performance parameters have been shown to be equivalent to the TSI manufactured panels. The PWI 501 rev. 0, the verbal instructions from the TSI Technical representative, and the Quality assurance provided by Bechtel assure the panels' construction was uniform and controlled. The small quantity of panels fabricated at PVNGS is considered to be adequate since they meet the TSI manufacturing specifications for their fire-rated endurance performance parameters. As stated previously, PVNGS proposed tests will be conducted with existing inventory of TSI panels or panels ordered from TSI.

NRC REQUIRED INFORMATION ITEM II.B.2

For any parameter that is not known or has not been verified, describe how you will evaluate the in-plant barrier for acceptability.

APS RESPONSE TO ITEM II.B.2

The NEI identified barrier performance parameter pertaining to internal support mechanisms have been used at PVNGS as "skill-of-the-craft" practice. Installers used shims of Thermo-Lag material secured to the commodity with tie wires to provide support during the installation process. The actual location of each support can not be determined unless a complete destructive examination is performed. The structural evaluations for the configurations will conservatively assume unsupported span lengths and will not use the internal support mechanism performance parameter.

The fire barrier configurations remaining at PVNGS to meet fire protection commitments (reference APS Response to Item III.B.2) will be evaluated with the use of existing equipment qualification tests for PVNGS' IEEE 383-1974 cables. The fire tests conducted by NEI used a copper conductor wire in their raceways consistent with Generic Letter 86-10, Supplement 1. The performance parameter of the total enclosed mass of the cables and the raceways enclosed will be used in our evaluation. The remaining cable parameters are not required for the evaluation.

NRC REQUIRED INFORMATION ITEM II.B.3

To evaluate NUMARC's application guidance, an understanding of the types and extent of the unknown parameters is needed. Describe the type and extent of the unknown parameters at your plant in this context.

APS RESPONSE TO ITEM II.B.3

Reference Response to Item II.B.2

III. THERMO-LAG FIRE BARRIERS OUTSIDE THE SCOPE OF THE NUMARC PROGRAM

NRC REQUIRED INFORMATION ITEM III.B.1

Describe the barriers discussed under Item I.B.1 that you have determined will not be bounded by the NUMARC test program.

APS RESPONSE TO ITEM III.B.1

PVNGS has identified a group of configurations that are not completely bounded by the NEI test program. Attachment E provides the configuration ID, intended purpose, rating and resolution plan for all of PVNGS fire rated configurations originally reported in Attachment A of Revision 0 of this report. The group of configurations that have a stated resolution of "perform bounding test or reconfigure the configuration to a bounded test configuration" are not currently bounded by the NEI Application Guide.

NRC REQUIRED INFORMATION ITEM III.B.2

Describe the plant-specific corrective action program or plan you expect to use to evaluate the fire barrier configurations particular to the plant. This description should include a discussion of the evaluations and tests being considered to resolve the fire barrier issues identified in GL 92-08 and to demonstrate the adequacy of existing in-plant barriers.

APS RESPONSE TO ITEM III.B.2

PVNGS has reduced the total square footage of Thermo-Lag fire barriers required for compliance to fire protection commitments by approximately 80% by crediting operator actions. The PVNGS 10 CFR 50 Appendix R III.G/III.L Compliance Assessment Calculation has been revised to credit operator actions. The revised analysis shows that the listed operator actions meet the requirements of Appendix R and in these cases, the fire rated Thermo-Lag barriers are no longer required to provide the fire-rated barrier separation requirement. Attachment E delineates those configurations which have been eliminated due to engineering analysis and manual actions. This reduction has eliminated the requirement for all 3-hour fire rated Thermo-Lag configurations.

The total number of specific configurations, as originally provided in Reference 2, Attachment A is 612. The number of configurations that are no longer required is 433. The existing Thermo-Lag configurations, except those used for destructive examination, will remain in place and be classified as Balance-of-Plant (BOP) barriers as long as ampacity derating concerns do not require their removal. These barriers are to support the defense-in-depth approach that PVNGS Fire Hazard Analysis incorporates.

An evaluation of Appendix R III.G/III.L analysis for the manual and Control Room operation of the non-class auxiliary feedwater pump and alignment valves in the event of a fire in the MSSS (Fire Zones 72, 73, 74A, and 74B) will be performed. A successful evaluation would eliminate the requirement for fire rated Thermo-Lag configurations in the MSSS building. This reduction is approximately 5% of

Thermo-Lag fire barriers by sq. ft. This analysis should be complete in the first quarter of 1995. This would further reduce the number of configurations required by 50.

PVNGS has justified and received NRC approval for deviations to all 1-hour and 3-hour Thermo-Lag installations. The deviations are necessary due to the test configuration requirement to protect intervening steel which penetrates the protective envelope for a distance of 9 or 18 inches outward from the point of contact of the barrier, depending upon the hourly rating of the barrier. PVNGS protected intervening steel which came in contact with the protected raceway to a distance of 8 inches. Steel which penetrated the protected envelope, but did not come in contact with the raceway or associated supports, was not protected.

The requested and approved deviations pertain to the remaining fire-rated Thermo-Lag located in fire zones 10B, 42B, 42C, 46A, 46E, 47B, and 52D (this equates to all of the remaining fire rated Thermo-Lag at PVNGS). The deviations take exception to the requirement that the cold side temperature of the barrier be less than 325 degrees F. A fire test was performed to determine the effect of having less than 9" of protection on an intervening steel member in contact with the protected raceway. The fire test results were then extrapolated in order to determine the effect of 8-inches of protection on the intervening steel member. The resultant temperature at the protected raceway was found to be less than 175 degrees F.

A calculation was performed to show that intervening steel that does not contact the protected raceway and is not wrapped with Thermo-Lag would have to have a temperature in excess of 1000 degrees F to cause a heat flux sufficient to damage the cable. A fire test was performed to determine the maximum surface temperature of a 3/4-inch schedule 40 pipe, not protected with Thermo-Lag, inside the enclosure. This test showed the maximum temperature of the intervening steel to be 735 degrees F. A temperature of 1000 degrees F inside the protected envelope is not believed to be credible.

The deviations concluded that the existing barrier configurations are not qualified as 1-hour barriers, however they provide sufficient protection along with the other fire protection features to assure that the cables within the protected envelope would remain free of damage for the duration of the postulated fire.

At a minimum, PVNGS will evaluate the remaining required fire-rated configurations with respect to meeting the performance parameters of the approved deviations. Preliminary engineering evaluation has determined that the total number of configurations that are expected to be bounded by NEI's Application Guide is 114. The evaluation will determine the minimum fire endurance capability using NEI's Industry Application Guide. The fire endurance

capability of each configuration will be compared to the "worst-case" fire of the fire zone in which the Thermo-Lag configuration is located. The "worst-case" fire will be determined by Fire Hazards Analysis and/or fire modeling. If the configuration's fire endurance, based upon cold side temperature of the barrier, is not sufficient for the fire zone's "worst-case" fire, then the endurance of the configuration will be based on maintaining the cables free of damage. The cables are considered free of damage if their temperature is below 400 degrees F, as determined by fire tests.

Additionally, 3 configurations are installed as 3-hour barriers. The configurations are located in fire zone 10B which has detection and suppression. Therefore the fire endurance of these configurations will be shown to meet the 1-hour required endurance per Appendix R III.G.2.

Their are 12 remaining configurations which are not bounded by the NEI Application Guide. These configurations will be either reconfigured to a tested or bounded configuration or a fire test will be performed to determine the fire endurance of the specific configuration.

The Thermo-Lag enclosures that are installed on heating, ventilation, and air conditioning (HVAC) and cable tray supports will be evaluated using test results for cable trays or HVAC fire tests. It is expected that the evaluation will show the supports meet the requirement as protected, or are not required to be protected to meet the commitments as specified in the PVNGS UFSAR.

NRC REQUIRED INFORMATION ITEM III.B.3

If a plant-specific fire endurance test program is anticipated, describe the following:

a. Anticipated test specimens.

b. Test methodology and acceptance criteria including cable functionality.

APS RESPONSE TO ITEM III.B.3

PVNGS has 12 configurations that are not bounded by the NEI Application Guide. The intended resolution is to either reconfigure the enclosure to meet a tested bounded configuration or perform a test to bound the installed configuration. If the decision is to test these configurations they will be tested using the same installation configuration as in the plant. These installations are generally large three-sided and four-sided box configurations whose dimensions are not bounded by NEI's tests. The configurations have numerous conduits enclosed, some of

which are not required to be protected in accordance with Appendix R. The test methodology for these tests will be consistent with the test methodology delineated in Generic Letter 86-10, Supplement 1, utilizing a copper wire conductor.

The test report used for the original calculation, for the intervening steel which comes in contact with the protected raceway, was performed at TSI by Industrial Testing Laboratories, Inc. As a result, PVNGS will conduct or obtain a research fire test to provide engineering data. The test results of the TSI test are considered indeterminate.

IV. AMPACITY DERATING

NRC REQUIRED INFORMATION ITEMS IV.B.1 THROUGH IV.B.4

For the barriers described under Item I.B.1, describe those that you have determined will fall within the scope of the NUMARC program for ampacity derating, those that will not be bounded by the NUMARC program, and those for which ampacity derating does not apply.

For the barriers you have determined fall within the scope of the NUMARC program, describe what additional testing or evaluation you will need to perform to devise valid ampacity derating factors.

For the barrier configurations that you have determined will not be bounded by the NUMARC test program, describe your plan for evaluating whether or not the ampacity derating factors used for those electrical components protected by Thermo-Lag 330-1 (for protecting the safe-shutdown capability from fire or to achieve physical independence of electrical systems) are correct and applicable to the plant design. Describe all corrective actions needed and submit the schedule for completing such actions.

In the event that the NUMARC fire barrier tests indicate the need to upgrade existing in-plant barriers or to replace existing Thermo-Lag barriers with another fire barrier system, describe the alternative actions you will take (and the schedule for performing those actions) to confirm that the ampacity derating factors were derived by valid tests and are applicable to the modified plant design.

Your response to Section IV.B may depend on unknown specifics of the NUMARC ampacity derating test program (for example, the final barrier upgrades). However, your response should be as complete as possible. In addition, your response should be updated as additional information becomes available on the NUMARC program.

APS RESPONSE TO ITEMS IV.B.1 THROUGH IV.B.4

Ampacity derating is an issue that applies only to cable raceways containing power cables. Power cables which are routed through raceways enclosed in Thermo-Lag 330-1 material will be reviewed to verify actual amperage does not exceed the derated ampacity. The derating factors used will be based on the latest available industry data. The calculation will be formatted in a manner that will permit rapid reevaluation of the results at such a time as further information becomes available from the industry.

In the event derated ampacities are determined to be exceeded, additional reviews will be conducted to determine whether credit can be taken for conservatism such as diversity.

V. ALTERNATIVES

NRC REQUIRED INFORMATION ITEM V.B

Describe the specific alternatives available to you for achieving compliance with NRC fire protection requirements in plant areas that contain Thermo-Lag fire barriers. Examples of possible alternatives to Thermo-Lag-based upgrades include the following:

1. Upgrade existing in-plant barriers using other materials.

2. Replace Thermo-Lag barriers with other fire barrier materials or systems.

3. Reroute cables or relocate other protected components.

4. Qualify 3-hour barriers as 1-hour barriers and install detection and suppression systems to satisfy NRC fire protection requirements.

APS RESPONSE TO ITEM V.B

APS has significantly reduced the amount of Thermo-Lag 330-1 relied upon for compliance with NRC requirements by re-evaluating the engineering analyses and crediting operator actions as delineated in Attachment E.

Additionally, APS is currently pursuing the following alternatives to resolve the fire endurance issues on the Thermo-Lag 330-1 configurations that are required for achieving compliance with NRC fire protection requirements as described in APS response to item III.B.3:

1. Credit the non-class Auxiliary Feedwater Pump in the safe shutdown analysis.

2. Justify deviations based upon the use of fire modeling in conjunction with baseline (non-upgraded) test results to demonstrate adequate protection for the installed hazard.

3. Upgrade existing configurations to conform to tested configurations specified in the NEI Application Guide.

VI. SCHEDULES

NRC REQUIRED INFORMATION ITEM VI.B.1

Submit an integrated schedule that addresses the overall corrective action schedule for the plant. At a minimum, the schedule should address the following aspects for the plant:

1. implementation and completion of corrective actions and fire barrier upgrades for fire barrier configurations within the scope of the NUMARC program,

2. implementation and completion of plant-specific analysis, testing, or alternative actions for fire barriers outside the scope of the NUMARC program.

APS RESPONSE TO ITEM VI.B.1

PVNGS' current schedule for resolution of the Thermo-Lag 330-1 fire barrier concerns is preliminary, and future revisions to the schedule may be required. The integrated schedule for resolution of the Thermo-Lag 330-1 fire barrier concern is as follows:

ACTION	STATUS	SCHEDULED COMPLETION DATE
Obtain and Evaluate NUMARC Phase 2 Results and the Application Guide	Complete	
Reevaluate App R analysis credit operator actions	Complete	
Determine Qualification method or alternatives for remaining Thermo-Lag 330-1	In Progress	11/30/95
Finalize documentation of As-built configurations	In progress	03/30/95
Complete Thermo-Lag reduction effort	In progress	03/30/95
Apply NEI Application Guide	Open	11/30/95
Finalize PVNGS required fire tests	Open	03/30/95
Complete fire tests as required	Open	06/30/95
Complete upgrades in units as required	Open	12/30/95
Configuration control documents complete	Open	12/30/95
Combustibility evaluation	Open	12/30/95
Complete actions	Open	12/30/95

VII. SOURCES AND CORRECTNESS OF INFORMATION

NRC REQUIRED INFORMATION ITEM VII

Describe the sources of the information provided in response to this request for information (for example, from plant drawings, quality assurance documentation, walk downs or inspections) and how the accuracy and validity of the information was verified.

APS RESPONSE TO ITEM VII

The accuracy and validity of the information was verified as described in the response to Item II.B.1, as delineated in the notes contained in Attachment D.

Attachments

ATTACHMENT A

10 CFR 50, APPENDIX R

THERMO-LAG 330-1 RACEWAY CONFIGURATIONS

APPENDIX R THERMO-LAG RACEWAY CONFIGURATIONS:

Configuration ID:	Intended Purpose:	Fire Rating:	Configuration Type:		Length (in):	Width (in):	Depth (in):
1-A81-13-1A-04	Fire Barrier	1 hr	1A	J-Box / P-Box	17.5	16	11.5
1-A81-13-1A-05	Fire Barrier	1 hr	1A	J-Box / P-Box	27	27	15
1-A81-14-1A-01	Fire Barrier	1 hr	1A	J-Box / P-Box	32.25	36.5	30.75
1-A82-09-1A-01	Fire Barrier	1 hr	1A	J-Box / P-Box	18	20	10
1-A82-09-1A-02	Fire Barrier	1 hr	1A	J-Box / P-Box	38.75	10.75	10.75
1-A82-11-1A-01	Fire Barrier	1 hr	1A	J-Box / P-Box			11
1-A83-16-1A-01	Fire Barrier	1 hr	1A	J-Box / P-Box	27.5	26.25	15.5
1-C76-20-1A-01	Fire Barrier	1 hr	1A	J-Box / P-Box	41.25	26.75	15.5
1-C76-21-1A-02	Fire Barrier	1 hr	1A	J-Box / P-Box	26.75	26.75	15
1-C76-21-1A-06	Fire Barrier	1 hr	1A	J-Box / P-Box	26.25	27	15.5
2-A81-13-1A-03	Fire Barrier	1 hr	1A	J-Box / P-Box	8	20	9
2-A81-13-1A-04	Fire Barrier	1 hr	1A	J-Box / P-Box	26.5	32	27
2-A81-15-1A-01	Fire Barrier	1 hr	1A	J-Box / P-Box	48	37.5	15.25
2-A82-08-1A-01	Fire Barrier	1 hr	1A	J-Box / P-Box	20	18	8
2-A82-08-1A-02	Fire Barrier	1 hr	1A	J-Box / P-Box	26.25	11.5	10.25
2-A82-12-1A-01	Fire Barrier	1 hr	1A	J-Box / P-Box	26.5	12	10
2-A82-12-1A-02	Fire Barrier	1 hr	1A	J-Box / P-Box	18.25	7.5	8
2-A83-18-1A-01	Fire Barrier	1 hr	1A	J-Box / P-Box	27	27.5	14.5
2-C76-21-1A-01	Fire Barrier	1 hr	1A	J-Box / P-Box	40	34	16.5
2-C76-22-1A-01	Fire Barrier	1 hr	1A	J-Box / P-Box	47.5	26.5	15.5
2-C76-22-1A-06	Fire Barrier	1 hr	1A	J-Box / P-Box	29	32.75	14.75
3-A81-14-1A-02	Fire Barrier	1 hr	1A	J-Box / P-Box			12
3-A81-14-1A-03	Fire Barrier	1 hr	1A	J-Box / P-Box	19	8.5	11.5
3-A81-14-1A-04	Fire Barrier	1 hr	1A	J-Box / P-Box	26.5	26	15.5
3-A81-15-1A-01	Fire Barrier	1 hr	1A	J-Box / P-Box	61	42.5	44
3-A82-08-1A-01	Fire Barrier	1 hr	1A	J-Box / P-Box	21	17.75	8
3-A82-08-1A-02	Fire Barrier	1 hr	1A	J-Box / P-Box	26.75	11	9.75
3-A82-10-1A-01	Fire Barrier	1 hr	1A	J-Box / P-Box	25.75	26	14.5
3-A83-17-1A-01	Fire Barrier	1 hr	1A	J-Box / P-Box	26.5	29.5	15.5
3-A83-17-1A-02	Fire Barrier	1 hr	1A	J-Box / P-Box	16	26	19
3-C76-20-1A-01	Fire Barrier	1 hr	1A	J-Box / P-Box	38.75	26.75	15
3-C76-21-1A-01	Fire Barrier	1 hr	1A	J-Box / P-Box	13.75	22.5	9.75
3-C76-21-1A-02	Fire Barrier	1 hr	1A	J-Box / P-Box	38	29.5	15
3-C76-21-1A-03	Fire Barrier	1 hr	1A	J-Box / P-Box	12.75	25	8.5
3-C76-21-1A-04	Fire Barrier	1 hr	1A	J-Box / P-Box	26	26	15.25
1-A81-13-1B-01	Fire Barrier	1 hr	1B	J-Box / P-Box	35	26	16.5
2-A82-10-1B-01	Fire Barrier	1 hr	1B	J-Box / P-Box	17.5	8.75	7.75
2-C76-22-1B-02	Fire Barrier	1 hr	1B	J-Box / P-Box	7.75	17.25	9.25
3-C76-20-1B-01	Fire Barrier	1 hr	1B	J-Box / P-Box	22.75	10.75	8
1-A81-13-3A-02	Fire Barrier	1 hr	3A	Conduits			
1-A82-09-3A-01	Fire Barrier	1 hr	3A	Conduits	69	6	7
1-A82-09-3A-02	Fire Barrier	1 hr	3A	Conduits	100	16	7
1-A82-10-3A-01	Fire Barrier	1 hr	3A	Conduits	124.5	16.75	8
1-A82-11-3A-01	Fire Barrier	1 hr	3A	Conduits	50	10	8.5
1-A82-12-3A-01	Fire Barrier	1 hr	3A	Conduits	29.25	7	6.25
1-A83-16-3A-01	Fire Barrier	1 hr	3A	Conduits	26.75	22.75	9.5
1-C76-20-3A-01	Fire Barrier	1 hr	3A	Conduits	35	10.25	6.5
1-C76-20-3A-02	Fire Barrier	1 hr	3A	Conduits	36	9	8
2-A82-08-3A-01	Fire Barrier	1 hr	3A	Conduits	132	12.25	6.75
2-A82-09-3A-01	Fire Barrier	1 hr	3A	Conduits	95	14.5	6.5
2-A82-12-3A-01	Fire Barrier	1 hr	3A	Conduits	94	5.5	6
2-A82-12-3A-02	Fire Barrier	1 hr	3A	Conduits	123	5.25	6.5
2-C76-21-3A-01	Fire Barrier	1 hr	3A	Conduits	10.5	17	7.25
2-C76-21-3A-02	Fire Barrier	1 hr	3A	Conduits	17	11	6.75
2-C76-22-3A-01	Fire Barrier	1 hr	3A	Conduits	24.5	22.5	7.5
3-A81-14-3A-02	Fire Barrier	1 hr	3A	Conduits	27	19	9
3-A82-08-3A-01	Fire Barrier	1 hr	3A	Conduits	61.25	6	6.5

BLANK FIELD = UNABLE TO SIMPLIFY CONFIGURATION INTO (LENGTH x WIDTH x DEPTH), SEE FIGURE ON TYPICAL CONFIGURATION FORM.
J-BOX = JUNCTION BOX, P-BOX = PULL BOX.

APPENDIX R THERMO-LAG RACEWAY CONFIGURATIONS:

Configuration ID:	Intended Purpose:	Fire Rating:	Configuration Type:		Length (in):	Width (in):	Depth (in):
3-A82-08-3A-02	Fire Barrier	1 hr	3A	Conduits	187.75	14.5	6.25
3-A82-09-3A-01	Fire Barrier	1 hr	3A	Conduits	108.25	14.25	7
3-A82-10-3A-01	Fire Barrier	1 hr	3A	Conduits	24.5	16.5	9.25
3-A82-10-3A-02	Fire Barrier	1 hr	3A	Conduits	98	6.25	6.5
3-A82-10-3A-03	Fire Barrier	1 hr	3A	Conduits	130	6	6.5
3-A82-12-3A-01	Fire Barrier	1 hr	3A	Conduits	51.5	5.75	6.25
3-C76-20-3A-01	Fire Barrier	1 hr	3A	Conduits	8.75	19.5	7.75
3-C76-20-3A-02	Fire Barrier	1 hr	3A	Conduits	21	10	6.75
3-C76-21-3A-01	Fire Barrier	1 hr	3A	Conduits	77.5	11.75	9.75
3-C76-21-3A-02	Fire Barrier	1 hr	3A	Conduits	231.5	12	8.25
3-C76-21-3A-03	Fire Barrier	1 hr	3A	Conduits	18	22.5	9
1-A82-12-3B-03	Fire Barrier	1 hr	3B	Conduits	65.25	5	6.5
1-A83-16-3B-01	Fire Barrier	1 hr	3B	Conduits	23.25	36	11.25
1-A83-16-3B-02	Fire Barrier	1 hr	3B	Conduits	30.75	23.25	9.5
1-A83-16-3B-03	Fire Barrier	1 hr	3B	Conduits	20	36.5	12
1-A83-16-3B-04	Fire Barrier	1 hr	3B	Conduits	23	12	34
1-C76-20-3B-01	Fire Barrier	1 hr	3B	Conduits	21	19	10.25
1-C76-20-3B-02	Fire Barrier	1 hr	3B	Conduits	19	22.5	9
1-C76-20-3B-03	Fire Barrier	1 hr	3B	Conduits	141	11	7.5
1-C76-20-3B-04	Fire Barrier	1 hr	3B	Conduits	24	16	8.5
2-A81-13-3B-02	Fire Barrier	1 hr	3B	Conduits	21.5		
2-A83-18-3B-01	Fire Barrier	1 hr	3B	Conduits	20	25.5	11
2-A83-19-3B-01	Fire Barrier	1 hr	3B	Conduits	38.75	35	14.25
2-C76-21-3B-01	Fire Barrier	1 hr	3B	Conduits	34	24.75	10
2-C76-21-3B-02	Fire Barrier	1 hr	3B	Conduits	134	10.25	6.5
2-C76-22-3B-01	Fire Barrier	1 hr	3B	Conduits	9.75	12	8
3-A81-14-3B-01	Fire Barrier	1 hr	3B	Conduits	20.25	7	9
3-A81-14-3B-02	Fire Barrier	1 hr	3B	Conduits	51	19	8.5
3-A82-08-3B-01	Fire Barrier	1 hr	3B	Conduits	29	6	5.75
3-A82-08-3B-02	Fire Barrier	1 hr	3B	Conduits	33	5.5	6.25
3-A82-10-3B-01	Fire Barrier	1 hr	3B	Conduits	25	6.25	11.25
3-A82-12-3B-01	Fire Barrier	1 hr	3B	Conduits	26	5.75	6.75
3-A83-17-3B-01	Fire Barrier	1 hr	3B	Conduits	105	14.75	8.25
3-A83-17-3B-02	Fire Barrier	1 hr	3B	Conduits	39	19	9
1-A81-14-3D-01	Fire Barrier	1 hr	3D	Conduits	26.5	27	21
3-A81-15-3D-01	Fire Barrier	1 hr	3D	Conduits	44		
3-A83-18-3D-01	Fire Barrier	1 hr	3D	Conduits	30	34	14.5
1-A81-13-4A-03	Fire Barrier	1 hr	4A	Conduits	90	12.5	7.5
1-A81-13-4A-04	Fire Barrier	1 hr	4A	Conduits	15	7.25	6.25
1-A81-14-4A-02	Fire Barrier	1 hr	4A	Conduits	55.5	18	10.5
1-A82-09-4A-01	Fire Barrier	1 hr	4A	Conduits	41	5.5	4.75
1-A82-09-4A-02	Fire Barrier	1 hr	4A	Conduits	44	5	5.25
1-A82-09-4A-03	Fire Barrier	1 hr	4A	Conduits	22	5	5.25
1-A82-09-4A-04	Fire Barrier	1 hr	4A	Conduits	31	5	14
1-A82-10-4A-01	Fire Barrier	1 hr	4A	Conduits	29.5	6	14.5
1-A82-10-4A-02	Fire Barrier	1 hr	4A	Conduits	26	6	14.5
1-A82-11-4A-01	Fire Barrier	1 hr	4A	Conduits	72	5.75	14.5
1-A82-11-4A-02	Fire Barrier	1 hr	4A	Conduits	34	5.5	
1-A82-11-4A-03	Fire Barrier	1 hr	4A	Conduits	3.75	6	5.25
1-A82-11-4A-04	Fire Barrier	1 hr	4A	Conduits	8.25	5.25	5
1-A82-12-4A-02	Fire Barrier	1 hr	4A	Conduits	144	6.5	6.75
1-A83-16-4A-01	Fire Barrier	1 hr	4A	Conduits	49.5	15.5	7.5
1-A83-16-4A-02	Fire Barrier	1 hr	4A	Conduits	55	6.25	6
1-A83-18-4A-01	Fire Barrier	1 hr	4A	Conduits	30	24.25	10.75
1-A83-18-4A-02	Fire Barrier	1 hr	4A	Conduits	27	23	12
1-C76-20-4A-01	Fire Barrier	1 hr	4A	Conduits	223	9.5	5
1-C76-20-4A-02	Fire Barrier	1 hr	4A	Conduits	24	11	9.5

BLANK FIELD = UNABLE TO SIMPLIFY CONFIGURATION INTO (LENGTH x WIDTH x DEPTH), SEE FIGURE ON TYPICAL CONFIGURATION FORM.
J-BOX = JUNCTION BOX, P-BOX = PULL BOX.

APPENDIX R THERMO-LAG RACEWAY CONFIGURATIONS:

Configuration ID:	Intended Purpose:	Fire Rating:	Configuration Type:		Length (in):	Width (in):	Depth (in):
1-C76-21-4A-01	Fire Barrier	1 hr	4A	Conduits	51	7.5	6.5
1-C76-21-4A-03	Fire Barrier	1 hr	4A	Conduits	294	5.5	5
1-C76-21-4A-08	Fire Barrier	1 hr	4A	Conduits	30.75	6.5	4.5
2-A81-13-4A-02	Fire Barrier	1 hr	4A	Conduits	66.5	8	16
2-A81-15-4A-01	Fire Barrier	1 hr	4A	Conduits	24	26	6.25
2-A81-15-4A-03	Fire Barrier	1 hr	4A	Conduits	27.5	29	19.75
2-A82-08-4A-01	Fire Barrier	1 hr	4A	Conduits	44	6	5.5
2-A82-08-4A-02	Fire Barrier	1 hr	4A	Conduits	11	5.5	5.5
2-A82-08-4A-03	Fire Barrier	1 hr	4A	Conduits	69	5.5	5.75
2-A82-08-4A-04	Fire Barrier	1 hr	4A	Conduits	43	15	5.75
2-A82-09-4A-01	Fire Barrier	1 hr	4A	Conduits	45	13.75	5.75
2-A82-09-4A-02	Fire Barrier	1 hr	4A	Conduits	42	14.25	5.5
2-A82-10-4A-01	Fire Barrier	1 hr	4A	Conduits	60	5.75	5.5
2-A82-10-4A-02	Fire Barrier	1 hr	4A	Conduits	31	5.5	6
2-A82-10-4A-03	Fire Barrier	1 hr	4A	Conduits	142	5.75	5.5
2-A82-12-4A-01	Fire Barrier	1 hr	4A	Conduits	50	5	5.25
2-A82-12-4A-02	Fire Barrier	1 hr	4A	Conduits	50	5.25	5.25
2-A83-18-4A-01	Fire Barrier	1 hr	4A	Conduits	49	18	6.5
2-A83-18-4A-02	Fire Barrier	1 hr	4A	Conduits	30.5	12.25	7
2-C76-21-4A-01	Fire Barrier	1 hr	4A	Conduits	243	5	9
2-C76-22-4A-02	Fire Barrier	1 hr	4A	Conduits	303	6	6
2-C76-22-4A-06	Fire Barrier	1 hr	4A	Conduits	43	5.75	5.25
3-A81-14-4A-02	Fire Barrier	1 hr	4A	Conduits	45	21	6.75
3-A82-08-4A-01	Fire Barrier	1 hr	4A	Conduits	43.75	5.75	5.75
3-A82-08-4A-02	Fire Barrier	1 hr	4A	Conduits	22.75	12	5.75
3-A82-09-4A-01	Fire Barrier	1 hr	4A	Conduits	37.5	14.75	5.75
3-A82-09-4A-02	Fire Barrier	1 hr	4A	Conduits	34.25	14.5	5.75
3-A82-10-4A-01	Fire Barrier	1 hr	4A	Conduits	25.5	5.75	5.5
3-A82-10-4A-02	Fire Barrier	1 hr	4A	Conduits	17.5	5.25	5.75
3-A82-12-4A-01	Fire Barrier	1 hr	4A	Conduits	9.75	20	5.5
3-A82-12-4A-02	Fire Barrier	1 hr	4A	Conduits	35	5.75	6.25
3-A82-12-4A-03	Fire Barrier	1 hr	4A	Conduits	114.75	6	6.25
3-A83-17-4A-01	Fire Barrier	1 hr	4A	Conduits	23	22.5	6.25
3-A83-17-4A-02	Fire Barrier	1 hr	4A	Conduits	58	6	14.5
3-C76-20-4A-01	Fire Barrier	1 hr	4A	Conduits	17.75	5.5	18.5
3-C76-20-4A-02	Fire Barrier	1 hr	4A	Conduits	126	8.5	4.75
3-C76-20-4A-03	Fire Barrier	1 hr	4A	Conduits	58.5	8.25	4.75
1-J68-23-4A-01	Fire Barrier	3 hr	4A	Conduits	143		
2-J68-24-4A-01	Fire Barrier	3 hr	4A	Conduits	117		
3-J68-24-4A-01	Fire Barrier	3 hr	4A	Conduits	91.25	27.25	8
1-A81-13-4B-01	Fire Barrier	1 hr	4B	Conduits	35	13.5	7
1-A82-09-4B-01	Fire Barrier	1 hr	4B	Conduits	34	5	5.5
1-A83-16-4B-01	Fire Barrier	1 hr	4B	Conduits	23	15	8.5
1-A83-16-4B-02	Fire Barrier	1 hr	4B	Conduits	29	6.25	6.5
1-A83-18-4B-01	Fire Barrier	1 hr	4B	Conduits	25	24.25	12
1-A83-18-4B-02	Fire Barrier	1 hr	4B	Conduits	114	23	12.5
1-A83-18-4B-03	Fire Barrier	1 hr	4B	Conduits	30	22.75	11.75
1-C76-21-4B-02	Fire Barrier	1 hr	4B	Conduits	67	6	6.25
1-C76-21-4B-08	Fire Barrier	1 hr	4B	Conduits	18	5.5	5
1-C76-21-4B-11	Fire Barrier	1 hr	4B	Conduits	24	5.75	6.25
2-A81-13-4B-02	Fire Barrier	1 hr	4B	Conduits	34.5	6.25	13.75
2-A81-15-4B-01	Fire Barrier	1 hr	4B	Conduits	21.5	26.5	6.25
2-A82-08-4B-01	Fire Barrier	1 hr	4B	Conduits	28	6	5.5
2-A82-08-4B-02	Fire Barrier	1 hr	4B	Conduits	15	5.5	5.5
2-A82-10-4B-01	Fire Barrier	1 hr	4B	Conduits	57	6	5.75
2-A83-18-4B-01	Fire Barrier	1 hr	4B	Conduits	33.5	14	7
2-A83-18-4B-02	Fire Barrier	1 hr	4B	Conduits	141	19	6.5

BLANK FIELD = UNABLE TO SIMPLIFY CONFIGURATION INTO (LENGTH x WIDTH x DEPTH), SEE FIGURE ON TYPICAL CONFIGURATION FORM.
J-BOX = JUNCTION BOX, P-BOX = PULL BOX.

APPENDIX R THERMO-LAG RACEWAY CONFIGURATIONS:

Configuration ID:	Intended Purpose:	Fire Rating:	Configuration Type:		Length (in):	Width (in):	Depth (in):
2-A83-19-4B-03	Fire Barrier	1 hr	4B	Conduits	190	12.25	5.5
2-C76-21-4B-01	Fire Barrier	1 hr	4B	Conduits	21	4.5	9
2-C76-22-4B-02	Fire Barrier	1 hr	4B	Conduits	109	5.75	5.75
3-A83-17-4B-01	Fire Barrier	1 hr	4B	Conduits	23	18.5	6.25
3-A83-18-4B-02	Fire Barrier	1 hr	4B	Conduits	194	25	11.5
3-C76-20-4B-01	Fire Barrier	1 hr	4B	Conduits	40.5	6.25	6
3-C76-20-4B-02	Fire Barrier	1 hr	4B	Conduits	138	8	5
3-C76-21-4B-01	Fire Barrier	1 hr	4B	Conduits	99	11.25	5.75
3-C76-21-4B-02	Fire Barrier	1 hr	4B	Conduits	37.5	12.75	6.75

BLANK FIELD = UNABLE TO SIMPLIFY CONFIGURATION INTO (LENGTH x WIDTH x DEPTH). SEE FIGURE ON TYPICAL CONFIGURATION FORM.
J-BOX = JUNCTION BOX, P-BOX = PULL BOX.

TYPICAL CONFIGURATION
TYPE 1A
J-BOX/PULL-BOX ENCLOSURE

UNIT 1 BLDG AUX ROOM# A-123

ZONE 46A ELEV 100' RM NAME CHARGING PUMP

SIDES WITH EXPOSED ENTRIES 1 FIRE RATING 1 (hour)

RACEWAY #(S): (J-box # or conduit #(s) for pull boxes, LBs, and others)

1EZA1DBRF12 1EZA1DBRK13

INTERVENING STEEL (Y/N) Y (If yes, see corresponding Intervening Steel form)

ADJACENT CONFIGURATION TYPES 4A 4A

FILL IN CONFIGURATION DIMENSIONS:
SKETCH LOCATION AND DIMENSIONS OF EXPOSED ENTRIES:

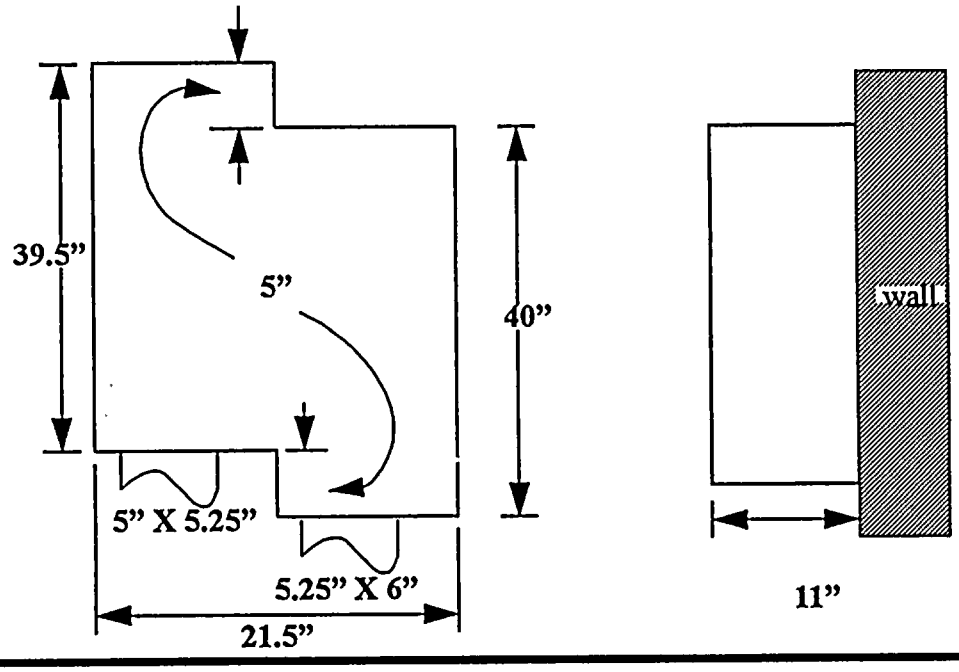

COMMENTS:

TM #1 KRISTOPHER D. BARR DATE

TM #2 RICHARD NAVARRO DATE

TYPICAL CONFIGURATION
TYPE 1A
J-BOX/PULL-BOX ENCLOSURE

UNIT 3 BLDG AUX. ROOM# A-128

ZONE 42C ELEV 100' RM NAME H2 RECOMBINER

SIDES WITH EXPOSED ENTRIES 2 FIRE RATING 1 (hour)

RACEWAY #(S): (J-box # or conduit #(s) for pull boxes, LBs, and others)

3EZA1BARR03 3EZA1BARR01 3EZA1BARK18

3EZA1BARK19

INTERVENING STEEL (Y/N) N (If yes, see corresponding Intervening Steel form)

ADJACENT CONFIGURATION TYPES 3A 4A

FILL IN CONFIGURATION DIMENSIONS:
SKETCH LOCATION AND DIMENSIONS OF EXPOSED ENTRIES:

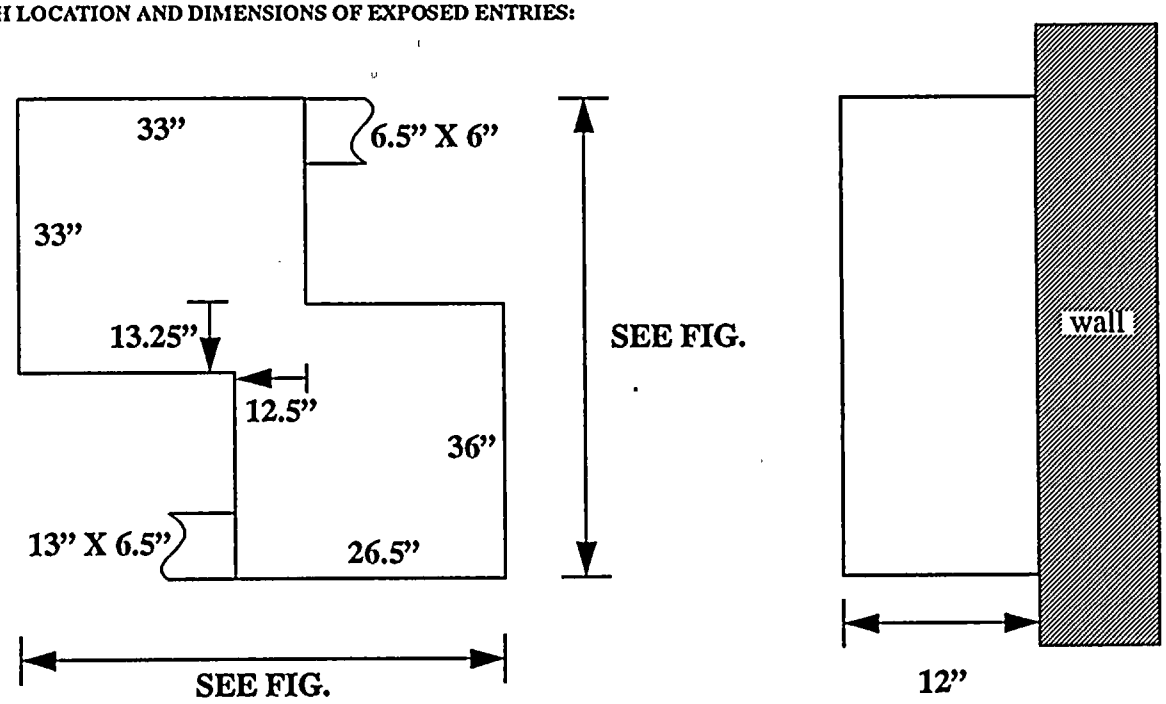

COMMENTS:
THE CONFIGURATION APPEARS TO HOLD CONDUITS BUT IT WAS ASSUMED TO BE A BOX INSTALLATION.

TM #1 KRISTOPHER D. BARR DATE

TM #2 KELLY MCGEE DATE

TYPICAL CONFIGURATION
TYPE 3A
HORIZONTAL CONDUIT ENCLOSURE MOUNTED ON WALL

UNIT 1 BLDG AUX ROOM# A-128

ZONE 42C ELEV 100' RM NAME H2 RECOMBINER

CONFIGURATION LENGTH SEE COMMENT FIRE RATING 1 (hour)

NUMBER OF CONDUITS 5

RACEWAY #(S):

1EZA1BARR01 1EZA1BARR02 1EZA1BARR03

1EZA1BARK18 1EZA1BARK19

INTERVENING STEEL (Y/N) N (If yes, see corresponding Intervening Steel form)

ADJACENT CONFIGURATION TYPES 1A 1A 1A

FILL IN CONFIGURATION DIMENSIONS:

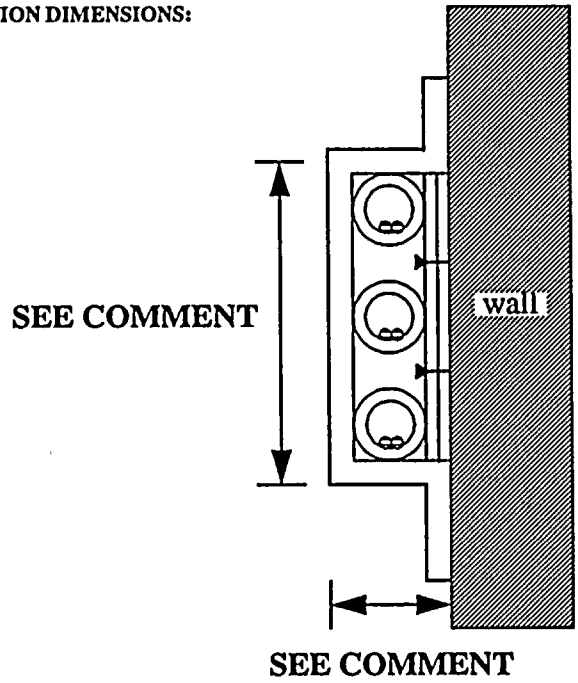

COMMENTS:
THIS CONFIGURATION IS WRAPPED WITH VARIOUS OTHERS AND IS NOT A TYPICAL 3A CONFIGURATION. SEE DETAILS AND NOTES FORM #1 OF DRAWING 1-E-ZAC-081 FOR DIMENSIONS OF THIS CONFIGURATION.

TM #1 _____ DATE _____
KRISTOPHER D. BARR

TM #2 _____ DATE _____
RICHARD NAVARRO

CORRESPONDING DRWG= 1-E-ZAC-081

DETAIL = 1B

DETAILS AND NOTES

DETAILS:

1-A81-13-3A-02:

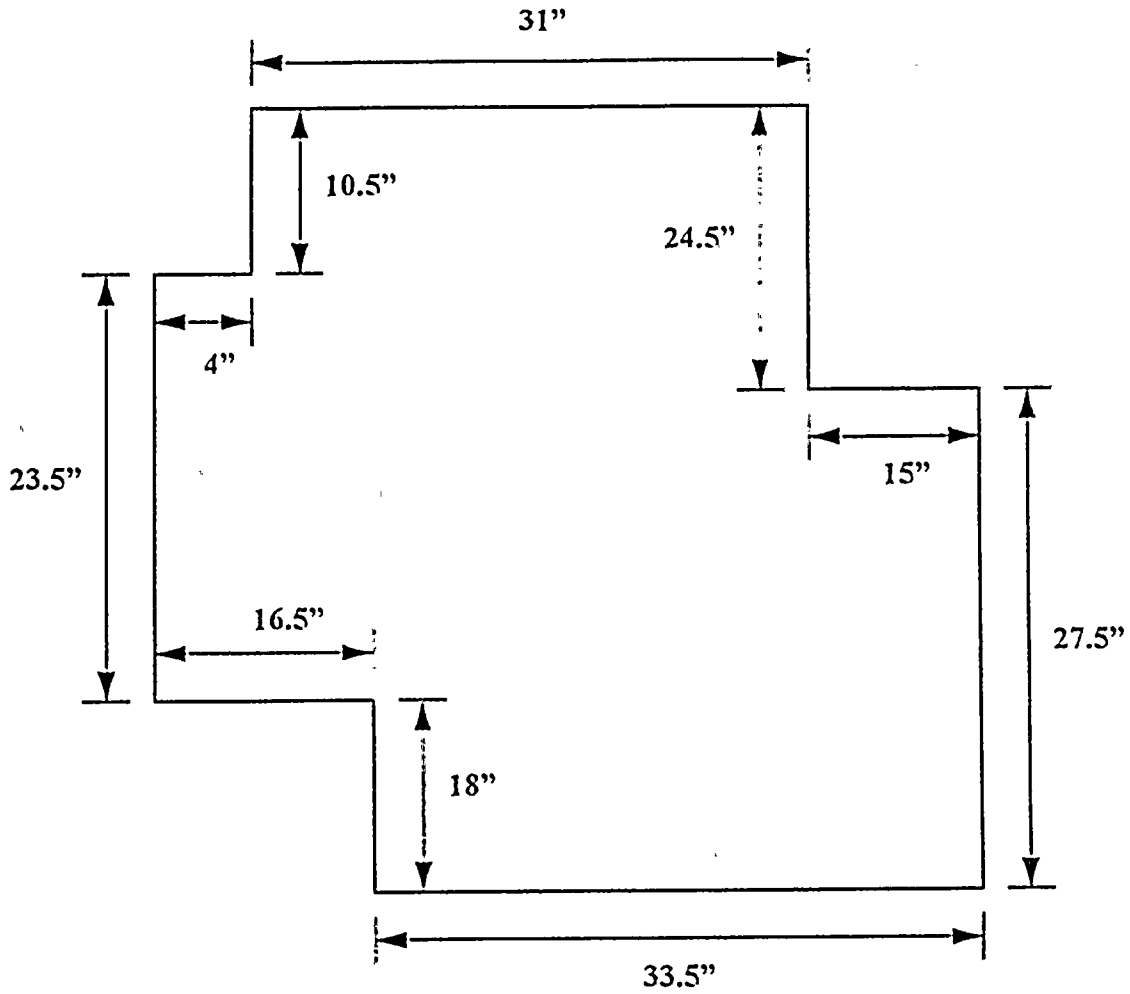

LEGEND:

CONCRETE

SUPPORT

CONFIGURATION CHANGE

NOTES:

THIS SHOWS THE DIMENSIONS FOR CONFIGURATION 1-A81-13-3A-02. IT HAS A DEPTH OF 15".

TYPICAL CONFIGURATION
TYPE 3B
VERTICAL CONDUIT ENCLOSURE MOUNTED ON WALL

UNIT 2 BLDG AUX ROOM# A-128

ZONE 42C ELEV 100' RM NAME H2 RECOMBINER

CONFIGURATION LENGTH 21.5" FIRE RATING 1 (hour)

NUMBER OF CONDUITS 1

RACEWAY #(S):

2EZA1BARR01

INTERVENING STEEL (Y/N) N (If yes, see corresponding Intervening Steel form)

ADJACENT CONFIGURATION TYPES 1A 1A

FILL IN CONFIGURATION DIMENSIONS:

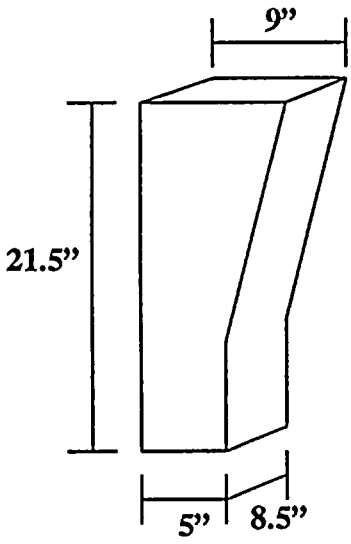

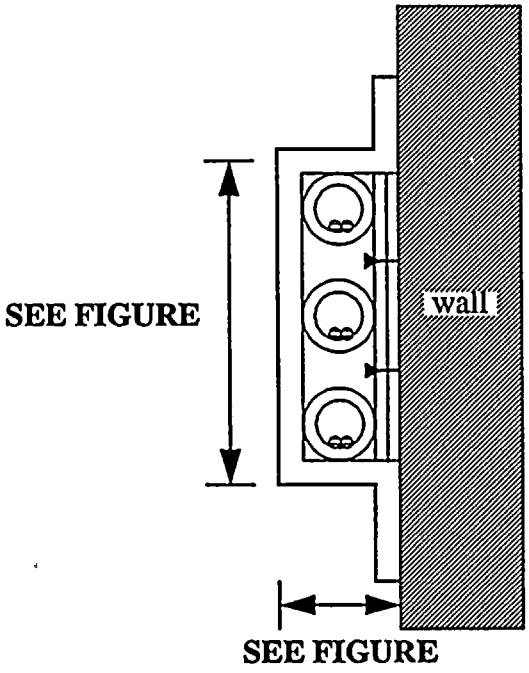

COMMENTS:
THE CONFIGURATION LENGTH FOR THIS ENCLOSURE WAS MEASURED TO THE ADJACENT 1A ENCLOSURE. THE CONFIGURATION ENLARGES ALONG RUN, SEE FIGURE ABOVE.

TM #1 KRISTOPHER D. BARR DATE

TM #2 JAMES FRATER DATE

TYPICAL CONFIGURATION
TYPE 3D
VERTICAL CONDUIT ENCLOSURE MOUNTED ON WALL CORNER

UNIT 3 BLDG AUX. ROOM# A-127

ZONE 42B ELEV 100' RM NAME E. ELEC. PEN

CONFIGURATION LENGTH 44" FIRE RATING 1 (hour)

NUMBER OF CONDUITS 6

RACEWAY #(S):

3EZA1BCRK03 3EZA1BCRK04 3EZA1BARK24

3EZA1BARK11 , 12 3EZA1BARK13 , 14 3EZA1BARK23

INTERVENING STEEL (Y/N) Y (If yes, see corresponding Intervening Steel form)

ADJACENT CONFIGURATION TYPES 1A ____ ____ ____

FILL IN CONFIGURATION DIMENSIONS:

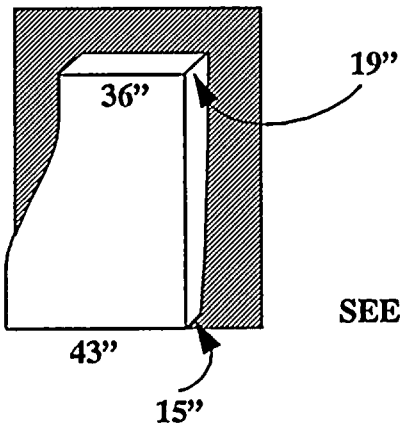

SEE FIG.

SEE FIG.

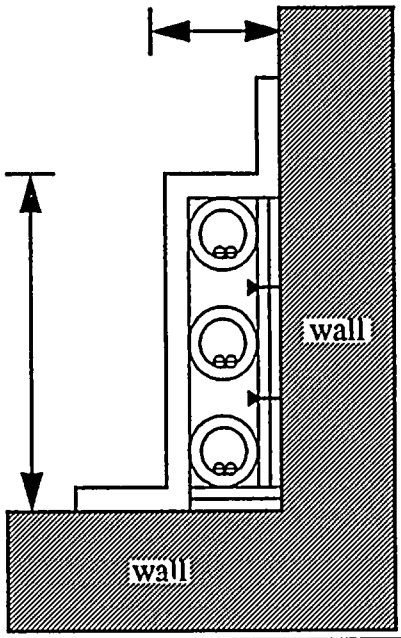

COMMENTS:
3EZA1BARK13 AND 3EZA1BARK14 ARE NOT REQUIRED TO BE WRAPPED.

TM #1 _____ DATE _____
KRISTOPHER D. BARR

TM #2 _____ DATE _____
Richard E. Navarro

TYPICAL CONFIGURATION
TYPE 4A
HORIZONTAL FOUR-SIDED CONDUIT ENCLOSURE

UNIT 1 BLDG AUX ROOM# A-123

ZONE 46A ELEV 100' RM NAME CHARGING PUMP

CONFIGURATION LENGTH 34" FIRE RATING 1 (hour)

NUMBER OF CONDUITS 2

RACEWAY #(S):

1EZA1DBRF12 1EZA1DBRK13

INTERVENING STEEL (Y/N) N (If yes, see corresponding Intervening Steel form)

ADJACENT CONFIGURATION TYPES 4A 3A

FILL IN CONFIGURATION DIMENSIONS:

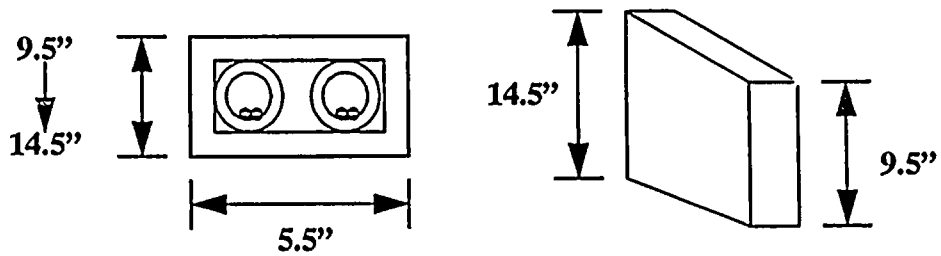

COMMENTS:
THIS CONFIGURATION ENLARGES SLIGHTLY ALONG THE LENGTH OF THE RUN.

TM #1 KRISTOPHER D. BARR DATE

TM #2 RICHARD NAVARRO DATE

TYPICAL CONFIGURATION
TYPE 4A
HORIZONTAL FOUR-SIDED CONDUIT ENCLOSURE

UNIT 1 BLDG CONTROL ROOM# J-113

ZONE 10B ELEV 100' RM NAME RMT SHUTDOWN B

CONFIGURATION LENGTH 143" FIRE RATING 3 (hour)

NUMBER OF CONDUITS 3

RACEWAY #(S):

1EZJ1AARC12 1EZJ1AARC14 1EZJ1AARC16

INTERVENING STEEL (Y/N) Y (If yes, see corresponding Intervening Steel form)

ADJACENT CONFIGURATION TYPES N/A

FILL IN CONFIGURATION DIMENSIONS:

SEE FIG.

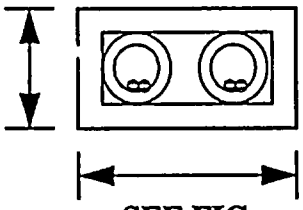

SEE FIG.

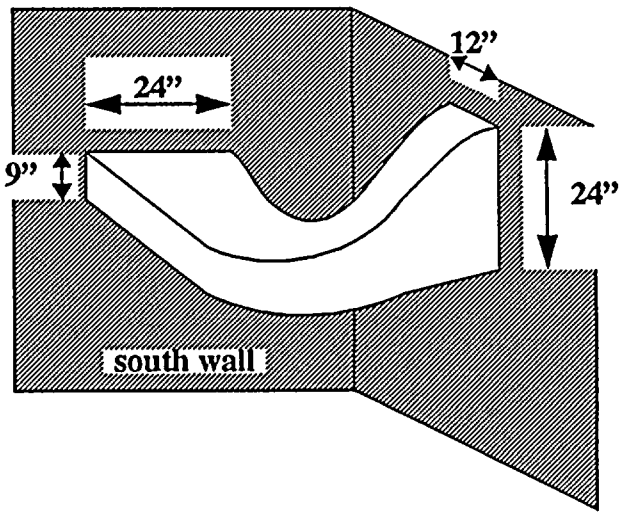

COMMENTS:
THIS CONFIGURATION CURVES TO WEST WALL AND CHANGES DIMENSIONS. SEE FIGURE.

TM #1 KRISTOPHER D. BARR DATE

TM #2 KELLY MCGEE DATE

TYPICAL CONFIGURATION
TYPE 4A
HORIZONTAL FOUR-SIDED CONDUIT ENCLOSURE

UNIT 2 BLDG CONTROL ROOM# J-113

ZONE 10B ELEV 100' RM NAME RMT SHUTDOWN B

CONFIGURATION LENGTH 117" FIRE RATING 3 (hour)

NUMBER OF CONDUITS 3

RACEWAY #(S):

2EZJ1AARC12 2EZJ1AARC14 2EZJ1AARC16

INTERVENING STEEL (Y/N) Y (If yes, see corresponding Intervening Steel form)

ADJACENT CONFIGURATION TYPES N/A

FILL IN CONFIGURATION DIMENSIONS:

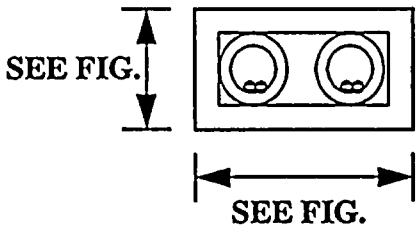

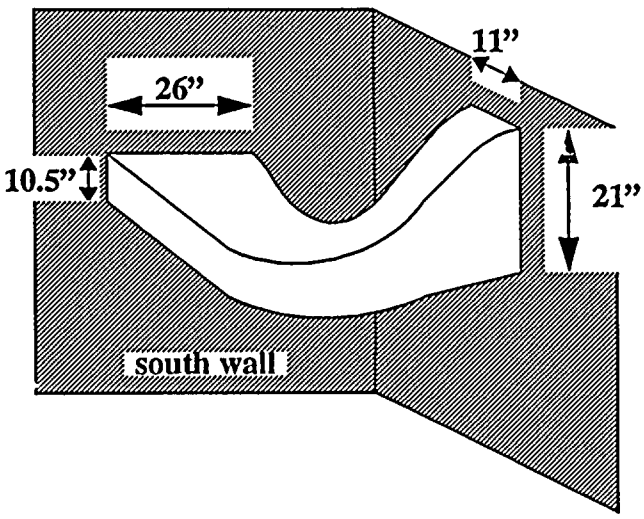

COMMENTS:
THE CONFIGURATION CHANGES SHAPE AS IT TURNS TOWARD THE WEST WALL.

TM #1 KRISTOPHER D. BARR DATE

TM #2 KELLY MCGEE DATE

ATTACHMENT B

10 CFR 50, APPENDIX R

THERMO-LAG 330-1 SUPPORT CONFIGURATIONS

THERMO-LAG SUPPORT CONFIGURATIONS

EQID:	Supported:	Hanger Number:	Drawing:	Intended Purpose:	Fire Rating:	Surface Area (sq in):	Surface Area (sq ft):
1EZA1BH19	Tray	H19	13-E-ZAC-033	Support, Fire Barrier	3-hr	2532	17.6
1EZA1BH39	Tray	H39	13-E-ZAC-033	Support, Fire Barrier	3-hr	5784	40
1EZA1BH44	Tray	H44	13-E-ZAC-033	Support, Fire Barrier	3-hr	5782	40
1EZA2BH31	Tray	H31	13-E-ZAC-035	Support, Fire Barrier	3-hr	11760	81.7
1EZA2DH14	Tray	H14	13-E-ZAC-039	Support, Fire Barrier	3-hr	6394	44
1EZA2DH20	Tray	H20	13-E-ZAC-039	Support, Fire Barrier	3-hr	11212	78
1EZJ1AH24	Tray	H24	13-E-ZJC-040	Support, Fire Barrier	3-hr	9180	63.8
1EZJ1AH26	Tray	H26	13-E-ZJC-040	Support, Fire Barrier	3-hr	10244	71
1EZJ1AH38	Tray	H38	13-E-ZJC-040	Support, Fire Barrier	3-hr	8155	56.6
1EZJ1AH39	Tray	H39	13-E-ZJC-040	Support, Fire Barrier	3-hr	7931	55
1EZJ1BH142	Tray	H142	13-E-ZJC-041	Support, Fire Barrier	3-hr	5138	35.7
1EZJ1BH143	Tray	H143	13-E-ZJC-041	Support, Fire Barrier	3-hr	6326	44
1EZJ2BH167	Tray	H167	13-E-ZJC-043	Support, Fire Barrier	3-hr	8932	62
1EZJ4BH2	Tray	H2	13-E-ZJC-045	Support, Fire Barrier	3-hr	6092	42
2ZJC311H001	HVAC	H001	13-P-ZJC-311	Support, Fire Barrier	3-hr	5798	40
2ZJC311H002	HVAC	H002	13-P-ZJC-311	Support, Fire Barrier	3-hr	1189	8.3
2ZJC311H003	HVAC	H003	13-P-ZJC-311	Support, Fire Barrier	3-hr	3881	27
2ZJC311H004	HVAC	H004	13-P-ZJC-311	Support, Fire Barrier	3-hr	1506	10.5
3ZJC311H003	HVAC	H003	13-P-ZJC-311	Support, Fire Barrier	3-hr	1000	7

ATTACHMENT C

TYPICAL PVNGS CONFIGURATIONS

Typical PVNGS Configurations (11 Typicals)

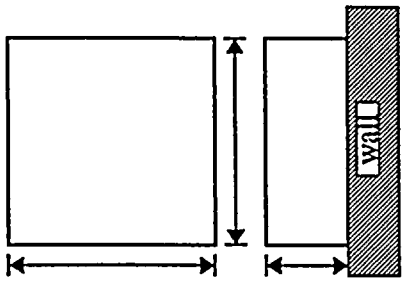

TYPE 1A
J-BOX/PULL BOX ENCLOSURE
FRONT & SIDE
ELEVATION VIEW

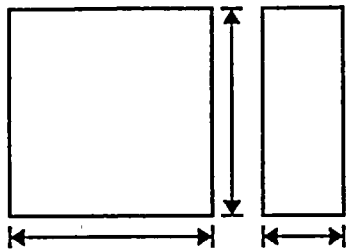

TYPE 1B
J-BOX/PULL BOX ENCLOSURE
ALL SIDES EXPOSED
FRONT & SIDE
ELEVATION VIEW

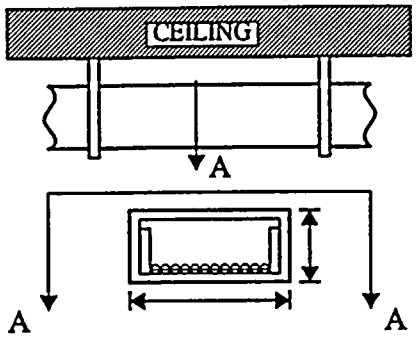

TYPE 2
CABLE TRAY ENCLOSURE
ALL SIDES EXPOSED
ELEVATION VIEW

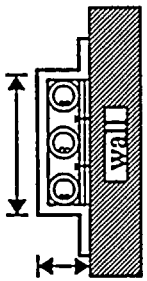

TYPE 3A
HORIZONTAL CONDUIT
ENCLOSURE
MOUNTED ON WALL
SIDE VIEW

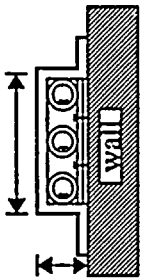

TYPE 3B
VERTICAL CONDUIT
ENCLOSURE
MOUNTED ON WAL
PLAN VIEW

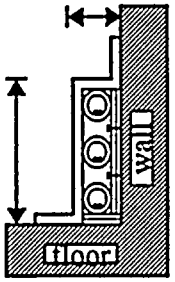

TYPE 3C
HORIZONTAL CONDUIT
ENCLOSURE
MOUNTED ON FLOOR &
WALL
SIDE VIEW

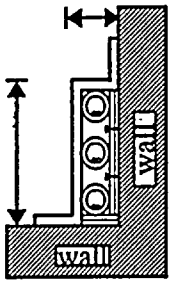

TYPE 3D
VERTICAL CONDUIT ENCLO-
SURE
MOUNTED ON WALL CORNER
PLAN VIEW

Typical PVNGS Configurations (11 Typicals)

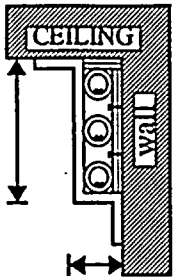

TYPE 3E
HORIZONTAL CONDUIT ENCLOSURE
MOUNTED ON WALL & CEILING
ELEVATION VIEW

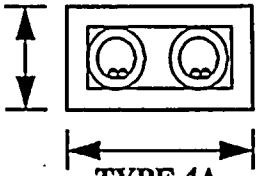

TYPE 4A
HORIZONTAL 4 - SIDED
CONDUIT ENCLOSURE
SIDE VIEW

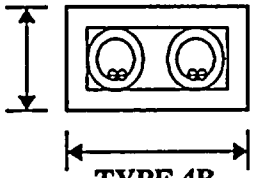

TYPE 4B
VERTICAL 4 - SIDED
CONDUIT ENCLOSURE
PLAN VIEW

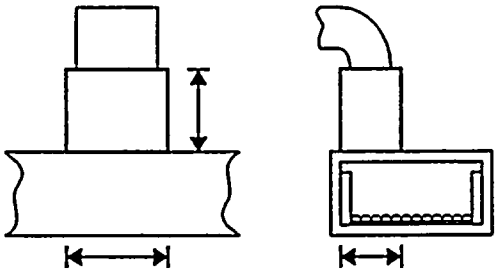

TYPE 5
CABLE DROP ENCLOSURE
ELEVATION VIEWx

ATTACHMENT D

THERMO-LAG BARRIER

INSTALLATION AND CABLE PARAMETERS

THERMO-LAG BARRIER INSTALLATION AND CABLE PARAMETERS

BARRIER PARAMETER	DESCRIPTION	OBTAINED	VERIFIED(METHOD)
1.	Raceway orientation (horizontal, vertical, radial bends)	Yes	Yes (Note 1)
2.	Conduit	Yes	Yes (Note 3)
3.	Junction boxes and lateral bends	Yes	Yes (Notes 1 & 3)
4.	Ladder back cable tray with single layer cable fill	Yes	Yes (Note 5)
5.	Cable tray with T-section	Yes	Yes (Notes 1,3 & 5)
6.	Raceway material (aluminum, steel)	Yes	Yes (Note 3)
7.	Support Protection, thermal shorts (penetrating elements)	Yes	Yes (Notes 1 & 3)
8.	Air drops	Yes	Yes (Note 5)
9.	Baseline fire barrier panel thickness	Yes	Yes (Notes 1,2 & 3)
10.	Preformed conduit panels	Yes	Yes (Notes 1 & 4)
11.	Panel rib orientation (parallel or perpendicular to the raceway	Yes	Yes (Note 2)
12.	Unsupported Spans	Yes	Yes (Note 1)
13.	Stress skin orientation (inside or outside)	Yes	Yes (Notes 1 & 2)
14.	Stress skin over joints or no stress skin over joints	Yes	Yes (Notes 1 & 2)

BARRIER PARAMETER	DESCRIPTION	OBTAINED	VERIFIED(METHOD)
15.	Stress skin ties or no stress skin ties	Yes	Yes (Note 2)
16.	Dry-fit, post buttered joints or pre-buttered joints	Yes	Yes (Note 2)
17.	Joint gap width	Yes	Yes (Note 2)
18.	Butt joints or grooved and scored	Yes	Yes (Note 2)
19.	Steel bands or tie wires	Yes	Yes (Note 2)
20.	Band/wire spacing	Yes	Yes (Note 2)
21.	Band/wire distance to joints	Yes	Yes (Note 2)
22.	No internal bands in trays	Yes	Yes (Note 5)
23.	No additional trowel material over sections and joints or additional trowel material applied.	Yes	Yes (Notes 1 & 2)
24.	No edge guards or edge guards	Yes	Yes (Notes 1 & 2)

CABLE PARAMETER	DESCRIPTION	OBTAINED	VERIFIED(METHOD)
1.	Cable size and type (power, control, or instrumentation).	Yes	Yes (Note 3)
2.	Cable jacket type (thermoplastic, thermoset) and materials	Yes	Yes (Note 3)
3.	Cable conductor insulation type (thermoplastic, thermoset plastic) and materials	Yes	Yes (Note 3)

CABLE PARAMETER	DESCRIPTION	OBTAINED	VERIFIED(METHOD)
4a.	Cable fill	Yes	Yes (Note 3)
4b.	Distribution of cables within the protected conduit or cable tray	No	No (Note 6)
5.	Proximity of cables to the unexposed (inside) surfaces of the fire barrier.	No	No
6.	Presence of materials between the cables and the unexposed side of the fire barrier material (for example, Sealtemp cloth, which is used in the NUMARC test specimens).	Yes	Yes (Notes 2 & 3)
7.	Cable operating temperature	Yes	Yes (Note 3)
8.	Temperatures at which the cables can no longer perform their intended function when energized at rated voltage and current.	No	No (Note 7)

NOTES PERTAINING TO TABLE

Note 1: Verification is from field walkdowns to perform installation verification. Walkdowns were performed by Engineering with second party verification.

Note 2: Field verification for <u>each</u> specific PVNGS installation was not performed. However, the installation technique for generic enclosures was determined by original installer testimony and verification of the testimony was performed utilizing destructive examination.

Note 3: Verification is from design documentation.

Note 4: PVNGS does not use pre-formed conduit panels. This has been validated by field walkdowns, Specifications, and Purchase Orders.

Note 5: PVNGS no longer credits Thermo-Lag 330-1 on cable trays to comply with commitments to 10 CFR 50, Appendix R.

Note 6: PVNGS no longer credits Thermo-Lag 330-1 on cable trays. Cables in conduits are random and the distribution of cables in conduit does not affect the applicability of fire endurance tests.

Note 7: PVNGS will use the equipment qualification maximum temperature limitation for LOCA events for PVNGS' IEEE 383 cable.

ATTACHMENT E

PVNGS THERMO-LAG CONFIGURATION RESOLUTION

RESOLUTIONS TO CONFIGURATIONS

CONFIGURATION ID	Intended Purpose:	RATING:	Resolution:
1-A81-13-1A-01	BOP	1 hr	See Note 1.
1-A81-13-1A-02	BOP	1 hr	See Note 1.
1-A81-13-1A-03	BOP	1 hr	See Note 1.
1-A81-13-1A-04	Appx R	1 hr	Use the Industry Application Guide to establish the extent that installed configurations can be bounded by previous tests.
1-A81-13-1A-05	Appx R	1 hr	Use the Industry Application Guide to establish the extent that installed configurations can be bounded by previous tests.
1-A81-14-1A-01	Appx R	1 hr	Perform bounding test or reconfigure the configuration to a bounded test configuration.
1-A82-09-1A-01	Appx R	1 hr	Use the Industry Application Guide to establish the extent that installed configurations can be bounded by previous tests.
1-A82-09-1A-02	Appx R	1 hr	Use the Industry Application Guide to establish the extent that installed configurations can be bounded by previous tests.
1-A82-11-1A-01	Appx R	1 hr	Use the Industry Application Guide to establish the extent that installed configurations can be bounded by previous tests.
1-A82-12-1A-01	BOP	1 hr	See Note 2.
1-A83-16-1A-01	Appx R	1 hr	Use the Industry Application Guide to establish the extent that installed configurations can be bounded by previous tests.
1-C76-20-1A-01	Appx R	1 hr	See Note 4.
1-C76-21-1A-01	BOP	1 hr	See Note 3.
1-C76-21-1A-02	Appx R	1 hr	See Note 4.
1-C76-21-1A-03	BOP	1 hr	See Note 3.
1-C76-21-1A-04	BOP	1 hr	See Note 3.
1-C76-21-1A-05	BOP	1 hr	See Note 3.
1-C76-21-1A-06	Appx R	1 hr	See Note 4.
1-C76-22-1A-01	BOP	1 hr	See Note 3.
2-A81-13-1A-01	BOP	1 hr	See Note 1.
2-A81-13-1A-02	BOP	1 hr	See Note 1.
2-A81-13-1A-03	Appx R	1 hr	Use the Industry Application Guide to establish the extent that installed configurations can be bounded by previous tests.
2-A81-13-1A-04	Appx R	1 hr	Use the Industry Application Guide to establish the extent that installed configurations can be bounded by previous tests.
2-A81-14-1A-01	BOP	1 hr	See Note 1.
2-A81-15-1A-01	Appx R	1 hr	Use the Industry Application Guide to establish the extent that installed configurations can be bounded by previous tests.
2-A81-15-1A-02	BOP	1 hr	See Note 3.
2-A81-16-1A-01	BOP	1 hr	See Note 3.
2-A81-17-1A-01	BOP	1 hr	See Note 1.
2-A81-17-1A-02	BOP	1 hr	See Note 1.
2-A82-08-1A-01	Appx R	1 hr	Use the Industry Application Guide to establish the extent that installed configurations can be bounded by previous tests.
2-A82-08-1A-02	Appx R	1 hr	Use the Industry Application Guide to establish the extent that installed configurations can be bounded by previous tests.
2-A82-12-1A-01	Appx R	1 hr	Use the Industry Application Guide to establish the extent that installed configurations can be bounded by previous tests.
2-A82-12-1A-02	Appx R	1 hr	Use the Industry Application Guide to establish the extent that installed configurations can be bounded by previous tests.
2-A83-18-1A-01	Appx R	1 hr	Use the Industry Application Guide to establish the extent that installed configurations can be bounded by previous tests.
2-C76-21-1A-01	Appx R	1 hr	See Note 4.
2-C76-22-1A-01	Appx R	1 hr	See Note 4.

BOP = Balance of Plant fire barrier

Appx R = Appendix R fire barrier

RESOLUTIONS TO CONFIGURATIONS

CONFIGURATION ID	Intended Purpose:	RATING:	Resolution:
2-C76-22-1A-02	BOP	1 hr	See Note 3.
2-C76-22-1A-03	BOP	1 hr	See Note 3.
2-C76-22-1A-04	BOP	1 hr	See Note 3.
2-C76-22-1A-05	BOP	1 hr	See Note 3.
2-C76-22-1A-06	Appx R	1 hr	See Note 4.
2-C76-23-1A-01	BOP	1 hr	See Note 3.
3-A81-13-1A-01	BOP	1 hr	See Note 1.
3-A81-14-1A-01	BOP	1 hr	See Note 1.
3-A81-14-1A-02	Appx R	1 hr	Perform bounding test or reconfigure the configuration to a bounded test configuration.
3-A81-14-1A-03	Appx R	1 hr	Perform bounding test or reconfigure the configuration to a bounded test configuration.
3-A81-14-1A-04	Appx R	1 hr	Use the Industry Application Guide to establish the extent that installed configurations can be bounded by previous tests.
3-A81-14-1A-05	BOP	1 hr	See Note 1.
3-A81-15-1A-01	Appx R	1 hr	Perform bounding test or reconfigure the configuration to a bounded test configuration.
3-A81-15-1A-02	BOP	1 hr	See Note 3.
3-A81-15-1A-03	BOP	1 hr	See Note 3.
3-A81-16-1A-01	BOP	1 hr	See Note 1.
3-A81-16-1A-02	BOP	1 hr	See Note 1.
3-A82-08-1A-01	Appx R	1 hr	Use the Industry Application Guide to establish the extent that installed configurations can be bounded by previous tests.
3-A82-08-1A-02	Appx R	1 hr	Use the Industry Application Guide to establish the extent that installed configurations can be bounded by previous tests.
3-A82-10-1A-01	Appx R	1 hr	Use the Industry Application Guide to establish the extent that installed configurations can be bounded by previous tests.
3-A82-11-1A-01	BOP	1 hr	See Note 2.
3-A83-17-1A-01	Appx R	1 hr	Use the Industry Application Guide to establish the extent that installed configurations can be bounded by previous tests.
3-A83-17-1A-02	Appx R	1 hr	Use the Industry Application Guide to establish the extent that installed configurations can be bounded by previous tests.
3-C76-20-1A-01	Appx R	1 hr	See Note 4.
3-C76-21-1A-01	Appx R	1 hr	See Note 4.
3-C76-21-1A-02	Appx R	1 hr	See Note 4.
3-C76-21-1A-03	Appx R	1 hr	See Note 4.
3-C76-21-1A-04	Appx R	1 hr	See Note 4.
3-C76-22-1A-01	BOP	1 hr	See Note 3.
3-C76-22-1A-02	BOP	1 hr	See Note 3.
3-C76-23-1A-01	BOP	1 hr	See Note 3.
1-A84-01-1A-01	BOP	3 hr	See Note 2.
1-A85-02-1A-01	BOP	3 hr	See Note 2.
1-A85-02-1A-02	BOP	3 hr	See Note 2.
1-A86-05-1A-01	BOP	3 hr	See Note 2.
1-A86-05-1A-02	BOP	3 hr	See Note 2.
1-A86-05-1A-03	BOP	3 hr	See Note 2.
1-A86-05-1A-04	BOP	3 hr	See Note 2.
1-A86-06-1A-01	BOP	3 hr	See Note 2.
1-A86-06-1A-02	BOP	3 hr	See Note 2.
1-A86-07-1A-01	BOP	3 hr	See Note 2.

BOP = Balance of Plant fire barrier
Appx R = Appendix R fire barrier

RESOLUTIONS TO CONFIGURATIONS

CONFIGURATION ID	Intended Purpose:	RATING:	Resolution:
1-A86-08-1A-01	BOP	3 hr	See Note 2.
1-A87-04-1A-01	BOP	3 hr	See Note 2.
1-A87-04-1A-02	BOP	3 hr	See Note 2.
1-A87-04-1A-03	BOP	3 hr	See Note 2.
1-C79-19-1A-01	BOP	3 hr	See Note 3.
1-C79-19-1A-02	BOP	3 hr	See Note 3.
1-C79-19-1A-03	BOP	3 hr	See Note 3.
2-A84-01-1A-01	BOP	3 hr	See Note 2.
2-A86-05-1A-01	BOP	3 hr	See Note 2.
2-A86-07-1A-01	BOP	3 hr	See Note 2.
2-A86-07-1A-02	BOP	3 hr	See Note 2.
2-A87-04-1A-01	BOP	3 hr	See Note 2.
2-A87-04-1A-02	BOP	3 hr	See Note 2.
2-A87-04-1A-03	BOP	3 hr	See Note 2.
2-A87-04-1A-04	BOP	3 hr	See Note 2.
2-C79-20-1A-01	BOP	3 hr	See Note 3.
2-C79-20-1A-02	BOP	3 hr	See Note 3.
2-C79-20-1A-03	BOP	3 hr	See Note 3.
2-C79-20-1A-04	BOP	3 hr	See Note 3.
2-C79-20-1A-05	BOP	3 hr	See Note 3.
3-A84-01-1A-01	BOP	3 hr	See Note 2.
3-A85-02-1A-01	BOP	3 hr	See Note 2.
3-A86-05-1A-01	BOP	3 hr	See Note 2.
3-A86-07-1A-01	BOP	3 hr	See Note 2.
3-A86-07-1A-02	BOP	3 hr	See Note 2.
3-A87-04-1A-01	BOP	3 hr	See Note 2.
3-A87-04-1A-02	BOP	3 hr	See Note 2.
3-A87-04-1A-03	BOP	3 hr	See Note 2.
3-A87-04-1A-04	BOP	3 hr	See Note 2.
3-A87-04-1A-05	BOP	3 hr	See Note 2.
3-A87-04-1A-06	BOP	3 hr	See Note 2.
3-C79-19-1A-01	BOP	3 hr	See Note 3.
1-A81-13-1B-01	BOP	1 hr	See Note 1.
1-A81-14-1B-01	BOP	1 hr	See Note 3.
1-A81-15-1B-01	BOP	1 hr	See Note 3.
1-A82-12-1B-01	BOP	1 hr	See Note 1.
1-A82-12-1B-02	BOP	1 hr	See Note 1.
1-A82-12-1B-03	BOP	1 hr	See Note 1.
1-A83-17-1B-01	BOP	1 hr	See Note 1.
1-A83-17-1B-02	BOP	1 hr	See Note 1:
1-C76-21-1B-01	BOP	1 hr	See Note 3.
1-C76-21-1B-02	BOP	1 hr	See Note 3.
1-C76-21-1B-03	BOP	1 hr	See Note 3.
1-C76-22-1B-01	BOP	1 hr	See Note 3.
1-C76-22-1B-02	BOP	1 hr	See Note 3.
2-A81-11-1B-01	BOP	1 hr	See Note 1.
2-A81-16-1B-01	BOP	1 hr	See Note 3.
2-A81-16-1B-02	BOP	1 hr	See Note 3.
2-A81-17-1B-01	BOP	1 hr	See Note 1.

BOP = Balance of Plant fire barrier
Appx R = Appendix R fire barrier

RESOLUTIONS TO CONFIGURATIONS

CONFIGURATION ID	Intended Purpose:	RATING:	Resolution:
2-A81-17-1B-02	BOP	1 hr	See Note 1.
2-A82-10-1B-01	Appx R	1 hr	Use the Industry Application Guide to establish the extent that installed configurations can be bounded by previous tests.
2-A83-18-1B-01	BOP	1 hr	See Note 1.
2-A83-18-1B-02	BOP	1 hr	See Note 1.
2-C76-22-1B-01	BOP	1 hr	See Note 3.
2-C76-22-1B-02	Appx R	1 hr	See Note 4.
2-C76-22-1B-03	BOP	1 hr	See Note 3.
2-C76-22-1B-04	BOP	1 hr	See Note 3.
2-C76-22-1B-05	BOP	1 hr	See Note 3.
2-C76-23-1B-01	BOP	1 hr	See Note 3.
2-C76-23-1B-02	BOP	1 hr	See Note 3.
3-A81-13-1B-01	BOP	1 hr	See Note 1.
3-A81-16-1B-01	BOP	1 hr	See Note 1.
3-A83-17-1B-01	BOP	1 hr	See Note 1.
3-C76-20-1B-01	Appx R	1 hr	See Note 4.
3-C76-22-1B-01	BOP	1 hr	See Note 3.
3-C76-22-1B-02	BOP	1 hr	See Note 3.
3-C76-22-1B-03	BOP	1 hr	See Note 3.
3-C76-23-1B-01	BOP	1 hr	See Note 3.
1-A86-08-1B-01	BOP	3 hr	See Note 2.
1-C79-19-1B-01	BOP	3 hr	See Note 3.
1-C79-19-1B-02	BOP	3 hr	See Note 3.
2-A87-04-1B-01	BOP	3 hr	See Note 2.
3-A85-02-1B-01	BOP	3 hr	See Note 2.
3-C79-19-1B-01	BOP	3 hr	See Note 3.
1-A82-12-02-01	BOP	1 hr	See Note 1.
1-A82-12-02-02	BOP	1 hr	See Note 1.
2-A82-10-02-01	BOP	1 hr	See Note 1.
3-A82-11-02-01	BOP	1 hr	See Note 1.
1-A81-13-3A-01	BOP	1 hr	See Note 1.
1-A81-13-3A-02	Appx R	1 hr	Perform bounding test or reconfigure the configuration to a bounded test configuration.
1-A81-14-3A-01	BOP	1 hr	See Note 3.
1-A82-09-3A-01	Appx R	1 hr	Use the Industry Application Guide to determine the minimum fire endurance capability that installed barrier configurations, which are bounded by test, can be reasonably expected to provide.
1-A82-09-3A-02	Appx R	1 hr	Use the Industry Application Guide to determine the minimum fire endurance capability that installed barrier configurations, which are bounded by test, can be reasonably expected to provide.
1-A82-10-3A-01	Appx R	1 hr	Use the Industry Application Guide to determine the minimum fire endurance capability that installed barrier configurations, which are bounded by test, can be reasonably expected to provide.
1-A82-11-3A-01	Appx R	1 hr	Use the Industry Application Guide to determine the minimum fire endurance capability that installed barrier configurations, which are bounded by test, can be reasonably expected to provide.
1-A82-12-3A-01	Appx R	1 hr	Use the Industry Application Guide to determine the minimum fire endurance capability that installed barrier configurations, which are bounded by test, can be reasonably expected to provide.

BOP = Balance of Plant fire barrier

Appx R = Appendix R fire barrier

RESOLUTIONS TO CONFIGURATIONS

CONFIGURATION ID	Intended Purpose:	RATING:	Resolution:
1-A83-16-3A-01	Appx R	1 hr	Use the Industry Application Guide to determine the minimum fire endurance capability that installed barrier configurations, which are bounded by test, can be reasonably expected to provide.
1-C76-20-3A-01	Appx R	1 hr	See Note 4.
1-C76-20-3A-02	Appx R	1 hr	See Note 4.
2-A81-11-3A-01	BOP	1 hr	See Note 1.
2-A81-13-3A-01	BOP	1 hr	See Note 1.
2-A81-14-3A-01	BOP	1 hr	See Note 3.
2-A82-08-3A-01	Appx R	1 hr	Use the Industry Application Guide to determine the minimum fire endurance capability that installed barrier configurations, which are bounded by test, can be reasonably expected to provide.
2-A82-09-3A-01	Appx R	1 hr	Use the Industry Application Guide to determine the minimum fire endurance capability that installed barrier configurations, which are bounded by test, can be reasonably expected to provide.
2-A82-12-3A-01	Appx R	1 hr	Use the Industry Application Guide to determine the minimum fire endurance capability that installed barrier configurations, which are bounded by test, can be reasonably expected to provide.
2-A82-12-3A-02	Appx R	1 hr	Use the Industry Application Guide to determine the minimum fire endurance capability that installed barrier configurations, which are bounded by test, can be reasonably expected to provide.
2-C76-21-3A-01	Appx R	1 hr	See Note 4.
2-C76-21-3A-02	Appx R	1 hr	See Note 4.
2-C76-22-3A-01	Appx R	1 hr	See Note 4.
2-C76-22-3A-02	BOP	1 hr	See Note 3.
3-A81-14-3A-01	BOP	1 hr	See Note 1.
3-A81-14-3A-02	Appx R	1 hr	Use the Industry Application Guide to determine the minimum fire endurance capability that installed barrier configurations, which are bounded by test, can be reasonably expected to provide.
3-A81-15-3A-01	BOP	1 hr	See Note 3.
3-A81-16-3A-01	BOP	1 hr	See Note 1.
3-A82-08-3A-01	Appx R	1 hr	Use the Industry Application Guide to determine the minimum fire endurance capability that installed barrier configurations, which are bounded by test, can be reasonably expected to provide.
3-A82-08-3A-02	Appx R	1 hr	Use the Industry Application Guide to determine the minimum fire endurance capability that installed barrier configurations, which are bounded by test, can be reasonably expected to provide.
3-A82-09-3A-01	Appx R	1 hr	Use the Industry Application Guide to determine the minimum fire endurance capability that installed barrier configurations, which are bounded by test, can be reasonably expected to provide.
3-A82-10-3A-01	Appx R	1 hr	Use the Industry Application Guide to determine the minimum fire endurance capability that installed barrier configurations, which are bounded by test, can be reasonably expected to provide.
3-A82-10-3A-02	Appx R	1 hr	Use the Industry Application Guide to determine the minimum fire endurance capability that installed barrier configurations, which are bounded by test, can be reasonably expected to provide.
3-A82-10-3A-03	Appx R	1 hr	Use the Industry Application Guide to determine the minimum fire endurance capability that installed barrier configurations, which are bounded by test, can be reasonably expected to provide.
3-A82-12-3A-01	Appx R	1 hr	Use the Industry Application Guide to determine the minimum fire endurance capability that installed barrier configurations, which are bounded by test, can be reasonably expected to provide.
3-C76-20-3A-01	Appx R	1 hr	See Note 4.
3-C76-20-3A-02	Appx R	1 hr	See Note 4.

BOP = Balance of Plant fire barrier

Appx R = Appendix R fire barrier

RESOLUTIONS TO CONFIGURATIONS

CONFIGURATION ID	Intended Purpose:	RATING:	Resolution:
3-C76-21-3A-01	Appx R	1 hr	See Note 4.
3-C76-21-3A-02	Appx R	1 hr	See Note 4.
3-C76-21-3A-03	Appx R	1 hr	See Note 4.
3-C76-22-3A-01	BOP	1 hr	See Note 3.
3-C76-23-3A-01	BOP	1 hr	See Note 3.
1-A85-02-3A-01	BOP	3 hr	See Note 2.
1-A85-02-3A-02	BOP	3 hr	See Note 2.
1-A85-02-3A-03	BOP	3 hr	See Note 2.
1-A85-02-3A-04	BOP	3 hr	See Note 2.
1-A86-06-3A-01	BOP	3 hr	See Note 2.
1-A86-06-3A-02	BOP	3 hr	See Note 2.
1-A86-07-3A-01	BOP	3 hr	See Note 2.
1-A86-07-3A-02	BOP	3 hr	See Note 2.
1-A86-07-3A-03	BOP	3 hr	See Note 2.
1-A86-08-3A-01	BOP	3 hr	See Note 2.
1-A87-04-3A-01	BOP	3 hr	See Note 2.
1-A87-04-3A-02	BOP	3 hr	See Note 2.
1-C79-19-3A-01	BOP	3 hr	See Note 3.
1-C79-19-3A-02	BOP	3 hr	See Note 3.
1-C79-19-3A-03	BOP	3 hr	See Note 3.
2-A85-03-3A-01	BOP	3 hr	See Note 2.
2-A86-05-3A-01	BOP	3 hr	See Note 2.
2-A86-05-3A-02	BOP	3 hr	See Note 2.
2-A86-06-3A-01	BOP	3 hr	See Note 2.
2-A86-06-3A-02	BOP	3 hr	See Note 2.
2-A86-07-3A-01	BOP	3 hr	See Note 2.
2-A86-07-3A-02	BOP	3 hr	See Note 2.
2-C79-20-3A-01	BOP	3 hr	See Note 3.
2-C79-20-3A-02	BOP	3 hr	See Note 3.
3-A85-02-3A-01	BOP	3 hr	See Note 2.
3-A86-05-3A-01	BOP	3 hr	See Note 2.
3-A86-05-3A-02	BOP	3 hr	See Note 2.
3-A86-05-3A-03	BOP	3 hr	See Note 2.
3-A86-06-3A-01	BOP	3 hr	See Note 2.
3-A86-07-3A-01	BOP	3 hr	See Note 2.
3-A86-07-3A-02	BOP	3 hr	See Note 2.
3-A86-07-3A-03	BOP	3 hr	See Note 2.
3-A87-04-3A-01	BOP	3 hr	See Note 2.
3-A87-04-3A-02	BOP	3 hr	See Note 2.
3-C79-19-3A-01	BOP	3 hr	See Note 3.
3-C79-19-3A-02	BOP	3 hr	See Note 3.
3-C79-19-3A-03	BOP	3 hr	See Note 3.
1-A81-13-3B-01	BOP	1 hr	See Note 1.
1-A82-12-3B-01	BOP	1 hr	See Note 2.
1-A82-12-3B-02	BOP	1 hr	See Note 2.
1-A82-12-3B-03	Appx R	1 hr	Use the Industry Application Guide to determine the minimum fire endurance capability that installed barrier configurations, which are bounded by test, can be reasonably expected to provide.

BOP = Balance of Plant fire barrier

Appx R = Appendix R fire barrier

RESOLUTIONS TO CONFIGURATIONS

CONFIGURATION ID	Intended Purpose:	RATING:	Resolution:
1-A83-16-3B-01	Appx R	1 hr	Use the Industry Application Guide to determine the minimum fire endurance capability that installed barrier configurations, which are bounded by test, can be reasonably expected to provide.
1-A83-16-3B-02	Appx R	1 hr	Use the Industry Application Guide to determine the minimum fire endurance capability that installed barrier configurations, which are bounded by test, can be reasonably expected to provide.
1-A83-16-3B-03	Appx R	1 hr	Use the Industry Application Guide to determine the minimum fire endurance capability that installed barrier configurations, which are bounded by test, can be reasonably expected to provide.
1-A83-16-3B-04	Appx R	1 hr	Use the Industry Application Guide to determine the minimum fire endurance capability that installed barrier configurations, which are bounded by test, can be reasonably expected to provide.
1-A83-17-3B-01	BOP	1 hr	See Note 1.
1-C76-20-3B-01	Appx R	1 hr	See Note 4.
1-C76-20-3B-02	Appx R	1 hr	See Note 4.
1-C76-20-3B-03	Appx R	1 hr	See Note 4.
1-C76-20-3B-04	Appx R	1 hr	See Note 4.
2-A81-11-3B-01	BOP	1 hr	See Note 1.
2-A81-11-3B-02	BOP	1 hr	See Note 1.
2-A81-13-3B-01	BOP	1 hr	See Note 1.
2-A81-13-3B-02	Appx R	1 hr	Use the Industry Application Guide to determine the minimum fire endurance capability that installed barrier configurations, which are bounded by test, can be reasonably expected to provide.
2-A81-17-3B-01	BOP	1 hr	See Note 1.
2-A81-17-3B-02	BOP	1 hr	See Note 1.
2-A83-18-3B-01	Appx R	1 hr	Use the Industry Application Guide to determine the minimum fire endurance capability that installed barrier configurations, which are bounded by test, can be reasonably expected to provide.
2-A83-19-3B-01	Appx R	1 hr	Use the Industry Application Guide to determine the minimum fire endurance capability that installed barrier configurations, which are bounded by test, can be reasonably expected to provide.
2-C76-21-3B-01	Appx R	1 hr	See Note 4.
2-C76-21-3B-02	Appx R	1 hr	See Note 4.
2-C76-22-3B-01	Appx R	1 hr	See Note 4.
2-C76-22-3B-02	BOP	1 hr	See Note 3.
2-C76-22-3B-03	BOP	1 hr	See Note 3.
3-A81-14-3B-01	Appx R	1 hr	Use the Industry Application Guide to determine the minimum fire endurance capability that installed barrier configurations, which are bounded by test, can be reasonably expected to provide.
3-A81-14-3B-02	Appx R	1 hr	Use the Industry Application Guide to determine the minimum fire endurance capability that installed barrier configurations, which are bounded by test, can be reasonably expected to provide.
3-A81-14-3B-03	BOP	1 hr	See Note 3.
3-A81-16-3B-01	BOP	1 hr	See Note 1.
3-A82-08-3B-01	Appx R	1 hr	Use the Industry Application Guide to determine the minimum fire endurance capability that installed barrier configurations, which are bounded by test, can be reasonably expected to provide.
3-A82-08-3B-02	Appx R	1 hr	Use the Industry Application Guide to determine the minimum fire endurance capability that installed barrier configurations, which are bounded by test, can be reasonably expected to provide.

BOP = Balance of Plant fire barrier
Appx R = Appendix R fire barrier

RESOLUTIONS TO CONFIGURATIONS

CONFIGURATION ID	Intended Purpose:	RATING:	Resolution:
3-A82-10-3B-01	Appx R	1 hr	Use the Industry Application Guide to determine the minimum fire endurance capability that installed barrier configurations, which are bounded by test, can be reasonably expected to provide.
3-A82-11-3B-01	BOP	1 hr	See Note 2.
3-A82-11-3B-02	BOP	1 hr	See Note 2.
3-A82-12-3B-01	Appx R	1 hr	Use the Industry Application Guide to determine the minimum fire endurance capability that installed barrier configurations, which are bounded by test, can be reasonably expected to provide.
3-A83-17-3B-01	Appx R	1 hr	Use the Industry Application Guide to determine the minimum fire endurance capability that installed barrier configurations, which are bounded by test, can be reasonably expected to provide.
3-A83-17-3B-02	Appx R	1 hr	Use the Industry Application Guide to determine the minimum fire endurance capability that installed barrier configurations, which are bounded by test, can be reasonably expected to provide.
3-C76-22-3B-01	BOP	1 hr	See Note 3.
3-C76-22-3B-02	BOP	1 hr	See Note 3.
1-A84-01-3B-01	BOP	3 hr	See Note 2.
1-A85-02-3B-01	BOP	3 hr	See Note 2.
1-A85-02-3B-02	BOP	3 hr	See Note 2.
1-A85-02-3B-03	BOP	3 hr	See Note 2.
1-A85-03-3B-01	BOP	3 hr	See Note 2.
1-A86-07-3B-01	BOP	3 hr	See Note 2.
1-A87-04-3B-01	BOP	3 hr	See Note 2.
1-A87-04-3B-02	BOP	3 hr	See Note 2.
1-A87-04-3B-03	BOP	3 hr	See Note 2.
2-A84-01-3B-01	BOP	3 hr	See Note 2.
2-A85-02-3B-01	BOP	3 hr	See Note 2.
2-A85-03-3B-01	BOP	3 hr	See Note 2.
2-A85-03-3B-02	BOP	3 hr	See Note 2.
2-A86-07-3B-01	BOP	3 hr	See Note 2.
2-A86-07-3B-02	BOP	3 hr	See Note 2.
2-A87-04-3B-01	BOP	3 hr	See Note 2.
2-A87-04-3B-02	BOP	3 hr	See Note 2.
2-A87-04-3B-03	BOP	3 hr	See Note 2.
3-A85-02-3B-01	BOP	3 hr	See Note 2.
3-A85-03-3B-01	BOP	3 hr	See Note 2.
3-A87-04-3B-01	BOP	3 hr	See Note 2.
3-A87-04-3B-02	BOP	3 hr	See Note 2.
3-A87-04-3B-03	BOP	3 hr	See Note 2.
1-A85-02-3C-01	BOP	3 hr	See Note 2.
2-A87-04-3C-01	BOP	3 hr	See Note 2.
2-A87-04-3C-02	BOP	3 hr	See Note 2.
3-A87-04-3C-01	BOP	3 hr	See Note 2.
3-A87-04-3C-02	BOP	3 hr	See Note 2.
3-A87-04-3C-03	BOP	3 hr	See Note 2.
1-A81-14-3D-01	Appx R	1 hr	Use the Industry Application Guide to establish the extent that installed configurations can be bounded by previous tests.
3-A81-15-3D-01	Appx R	1 hr	Perform bounding test or reconfigure the configuration to a bounded test configuration.
3-A83-18-3D-01	Appx R	1 hr	Use the Industry Application Guide to establish the extent that installed configurations can be bounded by previous tests.

BOP = Balance of Plant fire barrier

Appx R = Appendix R fire barrier

RESOLUTIONS TO CONFIGURATIONS

CONFIGURATION ID	Intended Purpose:	RATING:	Resolution:
1-A85-02-3D-01	BOP	3 hr	See Note 2.
1-A87-04-3D-01	BOP	3 hr	See Note 2.
1-A87-04-3D-02	BOP	3 hr	See Note 2.
2-A87-04-3D-01	BOP	3 hr	See Note 2.
3-A84-01-3D-01	BOP	3 hr	See Note 2.
3-A84-01-3D-02	BOP	3 hr	See Note 2.
3-A87-04-3D-01	BOP	3 hr	See Note 2.
1-A85-02-3E-01	BOP	3 hr	See Note 2.
2-C79-20-3E-01	BOP	3 hr	See Note 3.
1-A81-13-4A-01	BOP	1 hr	See Note 1.
1-A81-13-4A-02	BOP	1 hr	See Note 1.
1-A81-13-4A-03	Appx R	1 hr	Use the Industry Application Guide to determine the minimum fire endurance capability that installed barrier configurations, which are bounded by test, can be reasonably expected to provide.
1-A81-13-4A-04	Appx R	1 hr	Use the Industry Application Guide to determine the minimum fire endurance capability that installed barrier configurations, which are bounded by test, can be reasonably expected to provide.
1-A81-13-4A-05	BOP	1 hr	See Note 3.
1-A81-14-4A-01	BOP	1 hr	See Note 3.
1-A81-14-4A-02	Appx R	1 hr	Use the Industry Application Guide to determine the minimum fire endurance capability that installed barrier configurations, which are bounded by test, can be reasonably expected to provide.
1-A81-14-4A-03	BOP	1 hr	See Note 3.
1-A81-14-4A-04	BOP	1 hr	See Note 3.
1-A81-15-4A-01	BOP	1 hr	See Note 3.
1-A81-15-4A-02	BOP	1 hr	See Note 3.
1-A82-09-4A-01	Appx R	1 hr	Use the Industry Application Guide to determine the minimum fire endurance capability that installed barrier configurations, which are bounded by test, can be reasonably expected to provide.
1-A82-09-4A-02	Appx R	1 hr	Use the Industry Application Guide to determine the minimum fire endurance capability that installed barrier configurations, which are bounded by test, can be reasonably expected to provide.
1-A82-09-4A-03	Appx R	1 hr	Use the Industry Application Guide to determine the minimum fire endurance capability that installed barrier configurations, which are bounded by test, can be reasonably expected to provide.
1-A82-09-4A-04	Appx R	1 hr	Use the Industry Application Guide to determine the minimum fire endurance capability that installed barrier configurations, which are bounded by test, can be reasonably expected to provide.
1-A82-10-4A-01	Appx R	1 hr	Use the Industry Application Guide to determine the minimum fire endurance capability that installed barrier configurations, which are bounded by test, can be reasonably expected to provide.
1-A82-10-4A-02	Appx R	1 hr	Use the Industry Application Guide to determine the minimum fire endurance capability that installed barrier configurations, which are bounded by test, can be reasonably expected to provide.
1-A82-11-4A-01	Appx R	1 hr	Use the Industry Application Guide to determine the minimum fire endurance capability that installed barrier configurations, which are bounded by test, can be reasonably expected to provide.
1-A82-11-4A-02	Appx R	1 hr	Use the Industry Application Guide to determine the minimum fire endurance capability that installed barrier configurations, which are bounded by test, can be reasonably expected to provide.

BOP = Balance of Plant fire barrier

Appx R = Appendix R fire barrier

RESOLUTIONS TO CONFIGURATIONS

CONFIGURATION ID	Intended Purpose:	RATING:	Resolution:
1-A82-11-4A-03	Appx R	1 hr	Use the Industry Application Guide to determine the minimum fire endurance capability that installed barrier configurations, which are bounded by test, can be reasonably expected to provide.
1-A82-11-4A-04	Appx R	1 hr	Use the Industry Application Guide to determine the minimum fire endurance capability that installed barrier configurations, which are bounded by test, can be reasonably expected to provide.
1-A82-12-4A-01	BOP	1 hr	See Note 2.
1-A82-12-4A-02	Appx R	1 hr	Use the Industry Application Guide to determine the minimum fire endurance capability that installed barrier configurations, which are bounded by test, can be reasonably expected to provide.
1-A82-12-4A-03	BOP	1 hr	See Note 2.
1-A82-12-4A-04	BOP	1 hr	See Note 1.
1-A82-12-4A-05	BOP	1 hr	See Note 1.
1-A82-12-4A-06	BOP	1 hr	See Note 1.
1-A82-12-4A-07	BOP	1 hr	See Note 1.
1-A82-12-4A-08	BOP	1 hr	See Note 1.
1-A83-16-4A-01	Appx R	1 hr	Use the Industry Application Guide to determine the minimum fire endurance capability that installed barrier configurations, which are bounded by test, can be reasonably expected to provide.
1-A83-16-4A-02	Appx R	1 hr	Use the Industry Application Guide to determine the minimum fire endurance capability that installed barrier configurations, which are bounded by test, can be reasonably expected to provide.
1-A83-16-4A-03	BOP	1 hr	See Note 1.
1-A83-17-4A-01	BOP	1 hr	See Note 1.
1-A83-17-4A-02	BOP	1 hr	See Note 1.
1-A83-18-4A-01	Appx R	1 hr	Perform bounding test or reconfigure the configuration to a bounded test configuration.
1-A83-18-4A-02	Appx R	1 hr	Perform bounding test or reconfigure the configuration to a bounded test configuration.
1-C76-20-4A-01	Appx R	1 hr	See Note 4.
1-C76-20-4A-02	Appx R	1 hr	See Note 4.
1-C76-21-4A-01	Appx R	1 hr	See Note 4.
1-C76-21-4A-02	BOP	1 hr	See Note 3.
1-C76-21-4A-03	Appx R	1 hr	See Note 4.
1-C76-21-4A-04	BOP	1 hr	See Note 3.
1-C76-21-4A-05	BOP	1 hr	See Note 3.
1-C76-21-4A-06	BOP	1 hr	See Note 3.
1-C76-21-4A-07	BOP	1 hr	See Note 3.
1-C76-21-4A-08	Appx R	1 hr	See Note 4.
1-C76-21-4A-09	BOP	1 hr	See Note 3.
1-C76-21-4A-10	BOP	1 hr	See Note 3.
1-C76-21-4A-11	BOP	1 hr	See Note 3.
1-C76-21-4A-12	BOP	1 hr	See Note 3.
1-C76-21-4A-13	BOP	1 hr	See Note 3.
1-C76-21-4A-14	BOP	1 hr	See Note 3.
1-C76-22-4A-01	BOP	1 hr	See Note 3.
1-C76-22-4A-02	BOP	1 hr	See Note 3.
1-C76-22-4A-03	BOP	1 hr	See Note 3.
1-C76-22-4A-04	BOP	1 hr	See Note 3.
2-A81-11-4A-01	BOP	1 hr	See Note 1.
2-A81-13-4A-01	BOP	1 hr	See Note 1.

BOP = Balance of Plant fire barrier

Appx R = Appendix R fire barrier

RESOLUTIONS TO CONFIGURATIONS

CONFIGURATION ID	Intended Purpose:	RATING:	Resolution:
2-A81-13-4A-02	Appx R	1 hr	Use the Industry Application Guide to determine the minimum fire endurance capability that installed barrier configurations, which are bounded by test, can be reasonably expected to provide.
2-A81-15-4A-01	Appx R	1 hr	Use the Industry Application Guide to determine the minimum fire endurance capability that installed barrier configurations, which are bounded by test, can be reasonably expected to provide.
2-A81-15-4A-02	BOP	1 hr	See Note 3.
2-A81-15-4A-03	Appx R	1 hr	Use the Industry Application Guide to establish the extent that installed configurations can be bounded by previous tests.
2-A81-15-4A-04	BOP	1 hr	See Note 3.
2-A81-15-4A-05	BOP	1 hr	See Note 3.
2-A81-16-4A-01	BOP	1 hr	See Note 3.
2-A81-16-4A-02	BOP	1 hr	See Note 3.
2-A81-16-4A-03	BOP	1 hr	See Note 3.
2-A81-16-4A-04	BOP	1 hr	See Note 3.
2-A81-16-4A-05	BOP	1 hr	See Note 3.
2-A81-16-4A-06	BOP	1 hr	See Note 3.
2-A81-17-4A-01	BOP	1 hr	See Note 1.
2-A81-17-4A-02	BOP	1 hr	See Note 1.
2-A81-17-4A-03	BOP	1 hr	See Note 1.
2-A81-17-4A-04	BOP	1 hr	See Note 1.
2-A82-08-4A-01	Appx R	1 hr	Use the Industry Application Guide to determine the minimum fire endurance capability that installed barrier configurations, which are bounded by test, can be reasonably expected to provide.
2-A82-08-4A-02	Appx R	1 hr	Use the Industry Application Guide to determine the minimum fire endurance capability that installed barrier configurations, which are bounded by test, can be reasonably expected to provide.
2-A82-08-4A-03	Appx R	1 hr	Use the Industry Application Guide to determine the minimum fire endurance capability that installed barrier configurations, which are bounded by test, can be reasonably expected to provide.
2-A82-08-4A-04	Appx R	1 hr	Use the Industry Application Guide to determine the minimum fire endurance capability that installed barrier configurations, which are bounded by test, can be reasonably expected to provide.
2-A82-09-4A-01	Appx R	1 hr	Use the Industry Application Guide to determine the minimum fire endurance capability that installed barrier configurations, which are bounded by test, can be reasonably expected to provide.
2-A82-09-4A-02	Appx R	1 hr	Use the Industry Application Guide to determine the minimum fire endurance capability that installed barrier configurations, which are bounded by test, can be reasonably expected to provide.
2-A82-10-4A-01	Appx R	1 hr	Use the Industry Application Guide to determine the minimum fire endurance capability that installed barrier configurations, which are bounded by test, can be reasonably expected to provide.
2-A82-10-4A-02	Appx R	1 hr	Use the Industry Application Guide to determine the minimum fire endurance capability that installed barrier configurations, which are bounded by test, can be reasonably expected to provide.
2-A82-10-4A-03	Appx R	1 hr	Use the Industry Application Guide to determine the minimum fire endurance capability that installed barrier configurations, which are bounded by test, can be reasonably expected to provide.
2-A82-10-4A-04	BOP	1 hr	See Note 2.
2-A82-10-4A-05	BOP	1 hr	See Note 1.

BOP = Balance of Plant fire barrier

Appx R = Appendix R fire barrier

RESOLUTIONS TO CONFIGURATIONS

CONFIGURATION ID	Intended Purpose:	RATING:	Resolution:
2-A82-12-4A-01	Appx R	1 hr	Use the Industry Application Guide to determine the minimum fire endurance capability that installed barrier configurations, which are bounded by test, can be reasonably expected to provide.
2-A82-12-4A-02	Appx R	1 hr	Use the Industry Application Guide to determine the minimum fire endurance capability that installed barrier configurations, which are bounded by test, can be reasonably expected to provide.
2-A83-18-4A-01	Appx R	1 hr	Use the Industry Application Guide to determine the minimum fire endurance capability that installed barrier configurations, which are bounded by test, can be reasonably expected to provide.
2-A83-18-4A-02	Appx R	1 hr	Use the Industry Application Guide to determine the minimum fire endurance capability that installed barrier configurations, which are bounded by test, can be reasonably expected to provide.
2-A83-18-4A-03	BOP	1 hr	See Note 1.
2-A83-18-4A-04	BOP	1 hr	See Note 1.
2-A83-18-4A-05	BOP	1 hr	See Note 1.
2-A83-18-4A-06	BOP	1 hr	See Note 1.
2-A83-18-4A-07	BOP	1 hr	See Note 1.
2-C76-21-4A-01	Appx R	1 hr	See Note 4.
2-C76-22-4A-01	BOP	1 hr	See Note 3.
2-C76-22-4A-02	Appx R	1 hr	See Note 4.
2-C76-22-4A-03	BOP	1 hr	See Note 3.
2-C76-22-4A-04	BOP	1 hr	See Note 3.
2-C76-22-4A-05	BOP	1 hr	See Note 3.
2-C76-22-4A-06	Appx R	1 hr	See Note 4.
2-C76-22-4A-07	BOP	1 hr	See Note 3.
2-C76-22-4A-08	BOP	1 hr	See Note 3.
2-C76-22-4A-09	BOP	1 hr	See Note 3.
2-C76-22-4A-10	BOP	1 hr	See Note 3.
2-C76-22-4A-11	BOP	1 hr	See Note 3.
2-C76-22-4A-12	BOP	1 hr	See Note 3.
2-C76-23-4A-01	BOP	1 hr	See Note 3.
2-C76-23-4A-02	BOP	1 hr	See Note 3.
2-C76-23-4A-03	BOP	1 hr	See Note 3.
2-C76-23-4A-04	BOP	1 hr	See Note 3.
3-A81-13-4A-01	BOP	1 hr	See Note 1.
3-A81-13-4A-02	BOP	1 hr	See Note 1.
3-A81-14-4A-01	BOP	1 hr	See Note 1.
3-A81-14-4A-02	Appx R	1 hr	Use the Industry Application Guide to determine the minimum fire endurance capability that installed barrier configurations, which are bounded by test, can be reasonably expected to provide.
3-A81-14-4A-03	BOP	1 hr	See Note 1.
3-A81-14-4A-04	BOP	1 hr	See Note 3.
3-A81-15-4A-01	BOP	1 hr	See Note 3.
3-A81-15-4A-02	BOP	1 hr	See Note 3.
3-A81-16-4A-01	BOP	1 hr	See Note 1.
3-A81-16-4A-02	BOP	1 hr	See Note 1.
3-A81-16-4A-03	BOP	1 hr	See Note 1.
3-A82-08-4A-01	Appx R	1 hr	Use the Industry Application Guide to determine the minimum fire endurance capability that installed barrier configurations, which are bounded by test, can be reasonably expected to provide.

BOP = Balance of Plant fire barrier

Appx R = Appendix R fire barrier

RESOLUTIONS TO CONFIGURATIONS

CONFIGURATION ID	Intended Purpose:	RATING:	Resolution:
3-A82-08-4A-02	Appx R	1 hr	Use the Industry Application Guide to determine the minimum fire endurance capability that installed barrier configurations, which are bounded by test, can be reasonably expected to provide.
3-A82-09-4A-01	Appx R	1 hr	Use the Industry Application Guide to determine the minimum fire endurance capability that installed barrier configurations, which are bounded by test, can be reasonably expected to provide.
3-A82-09-4A-02	Appx R	1 hr	Use the Industry Application Guide to determine the minimum fire endurance capability that installed barrier configurations, which are bounded by test, can be reasonably expected to provide.
3-A82-10-4A-01	Appx R	1 hr	Use the Industry Application Guide to determine the minimum fire endurance capability that installed barrier configurations, which are bounded by test, can be reasonably expected to provide.
3-A82-10-4A-02	Appx R	1 hr	Use the Industry Application Guide to determine the minimum fire endurance capability that installed barrier configurations, which are bounded by test, can be reasonably expected to provide.
3-A82-11-4A-01	BOP	1 hr	See Note 1.
3-A82-11-4A-02	BOP	1 hr	See Note 2.
3-A82-11-4A-03	BOP	1 hr	See Note 1.
3-A82-12-4A-01	Appx R	1 hr	Use the Industry Application Guide to determine the minimum fire endurance capability that installed barrier configurations, which are bounded by test, can be reasonably expected to provide.
3-A82-12-4A-02	Appx R	1 hr	Use the Industry Application Guide to determine the minimum fire endurance capability that installed barrier configurations, which are bounded by test, can be reasonably expected to provide.
3-A82-12-4A-03	Appx R	1 hr	Use the Industry Application Guide to determine the minimum fire endurance capability that installed barrier configurations, which are bounded by test, can be reasonably expected to provide.
3-A83-17-4A-01	Appx R	1 hr	Use the Industry Application Guide to determine the minimum fire endurance capability that installed barrier configurations, which are bounded by test, can be reasonably expected to provide.
3-A83-17-4A-02	Appx R	1 hr	Use the Industry Application Guide to determine the minimum fire endurance capability that installed barrier configurations, which are bounded by test, can be reasonably expected to provide.
3-A83-17-4A-03	BOP	1 hr	See Note 1.
3-A83-17-4A-04	BOP	1 hr	See Note 1.
3-A83-17-4A-05	BOP	1 hr	See Note 1.
3-C76-20-4A-01	Appx R	1 hr	See Note 4.
3-C76-20-4A-02	Appx R	1 hr	See Note 4.
3-C76-20-4A-03	Appx R	1 hr	See Note 4.
3-C76-22-4A-01	BOP	1 hr	See Note 3.
3-C76-22-4A-02	BOP	1 hr	See Note 3.
3-C76-22-4A-03	BOP	1 hr	See Note 3.
3-C76-22-4A-04	BOP	1 hr	See Note 3.
3-C76-22-4A-05	BOP	1 hr	See Note 3.
3-C76-22-4A-06	BOP	1 hr	See Note 3.
3-C76-22-4A-07	BOP	1 hr	See Note 3.
3-C76-22-4A-08	BOP	1 hr	See Note 3.
3-C76-23-4A-01	BOP	1 hr	See Note 3.
3-C76-23-4A-02	BOP	1 hr	See Note 3.
1-A86-05-4A-01	BOP	3 hr	See Note 2.
1-A86-08-4A-01	BOP	3 hr	See Note 3.
1-A86-08-4A-02	BOP	3 hr	See Note 3.

BOP = Balance of Plant fire barrier

Appx R = Appendix R fire barrier

RESOLUTIONS TO CONFIGURATIONS

CONFIGURATION ID	Intended Purpose:	RATING:	Resolution:
1-A86-08-4A-03	BOP	3 hr	See Note 2.
1-A86-08-4A-04	BOP	3 hr	See Note 2.
1-A86-08-4A-05	BOP	3 hr	See Note 2.
1-A87-04-4A-01	BOP	3 hr	See Note 2.
1-C79-19-4A-01	BOP	3 hr	See Note 3.
1-C79-19-4A-02	BOP	3 hr	See Note 3.
1-C79-19-4A-03	BOP	3 hr	See Note 3.
1-C79-19-4A-04	BOP	3 hr	See Note 3.
1-C79-19-4A-05	BOP	3 hr	See Note 3.
1-C79-19-4A-06	BOP	3 hr	See Note 3.
1-C79-19-4A-07	BOP	3 hr	See Note 3.
1-J68-23-4A-01	Appx R	3 hr	Installation only requires 1-hr barrier, 3-hr installed.
2-A86-06-4A-01	BOP	3 hr	See Note 2.
2-A86-07-4A-01	BOP	3 hr	See Note 2.
2-A86-07-4A-02	BOP	3 hr	See Note 2.
2-A86-07-4A-03	BOP	3 hr	See Note 2.
2-A87-04-4A-01	BOP	3 hr	See Note 2.
2-A87-04-4A-02	BOP	3 hr	See Note 2.
2-A87-04-4A-03	BOP	3 hr	See Note 2.
2-A87-04-4A-04	BOP	3 hr	See Note 2.
2-A87-04-4A-05	BOP	3 hr	See Note 2.
2-C79-20-4A-01	BOP	3 hr	See Note 3.
2-C79-20-4A-02	BOP	3 hr	See Note 3.
2-C79-20-4A-03	BOP	3 hr	See Note 3.
2-C79-20-4A-04	BOP	3 hr	See Note 3.
2-C79-20-4A-05	BOP	3 hr	See Note 3.
2-C79-20-4A-06	BOP	3 hr	See Note 3.
2-C79-20-4A-07	BOP	3 hr	See Note 3.
2-C79-20-4A-08	BOP	3 hr	See Note 3.
2-J68-24-4A-01	Appx R	3 hr	Installation only requires 1-hr barrier, 3-hr installed.
3-A85-02-4A-01	BOP	3 hr	See Note 2.
3-A85-02-4A-02	BOP	3 hr	See Note 2.
3-A86-06-4A-01	BOP	3 hr	See Note 2.
3-A86-07-4A-01	BOP	3 hr	See Note 2.
3-A86-07-4A-02	BOP	3 hr	See Note 2.
3-A86-07-4A-03	BOP	3 hr	See Note 2.
3-A86-07-4A-04	BOP	3 hr	See Note 2.
3-A87-04-4A-01	BOP	3 hr	See Note 2.
3-A87-04-4A-02	BOP	3 hr	See Note 2.
3-A87-04-4A-03	BOP	3 hr	See Note 2.
3-C79-19-4A-01	BOP	3 hr	See Note 3.
3-C79-19-4A-02	BOP	3 hr	See Note 3.
3-C79-19-4A-03	BOP	3 hr	See Note 3.
3-C79-19-4A-04	BOP	3 hr	See Note 3.
3-C79-19-4A-05	BOP	3 hr	See Note 3.
3-C79-19-4A-06	BOP	3 hr	See Note 3.
3-C79-19-4A-07	BOP	3 hr	See Note 3.
3-C79-19-4A-08	BOP	3 hr	See Note 3.
3-C79-19-4A-09	BOP	3 hr	See Note 3.

BOP = Balance of Plant fire barrier

Appx R = Appendix R fire barrier

RESOLUTIONS TO CONFIGURATIONS

CONFIGURATION ID	Intended Purpose:	RATING:	Resolution:
3-J68-24-4A-01	Appx R	3 hr	Installation only requires 1-hr barrier, 3-hr installed.
1-A81-13-4B-01	Appx R	1 hr	Use the Industry Application Guide to determine the minimum fire endurance capability that installed barrier configurations, which are bounded by test, can be reasonably expected to provide.
1-A81-13-4B-02	BOP	1 hr	See Note 3.
1-A81-14-4B-01	BOP	1 hr	See Note 3.
1-A81-14-4B-02	BOP	1 hr	See Note 3.
1-A81-15-4B-01	BOP	1 hr	See Note 3.
1-A82-09-4B-01	Appx R	1 hr	Use the Industry Application Guide to determine the minimum fire endurance capability that installed barrier configurations, which are bounded by test, can be reasonably expected to provide.
1-A82-12-4B-01	BOP	1 hr	See Note 2.
1-A82-12-4B-02	BOP	1 hr	See Note 1.
1-A83-16-4B-01	Appx R	1 hr	Use the Industry Application Guide to determine the minimum fire endurance capability that installed barrier configurations, which are bounded by test, can be reasonably expected to provide.
1-A83-16-4B-02	Appx R	1 hr	Use the Industry Application Guide to determine the minimum fire endurance capability that installed barrier configurations, which are bounded by test, can be reasonably expected to provide.
1-A83-16-4B-03	BOP	1 hr	See Note 1.
1-A83-17-4B-01	BOP	1 hr	See Note 1.
1-A83-17-4B-02	BOP	1 hr	See Note 1.
1-A83-18-4B-01	Appx R	1 hr	Perform bounding test or reconfigure the configuration to a bounded test configuration.
1-A83-18-4B-02	Appx R	1 hr	Perform bounding test or reconfigure the configuration to a bounded test configuration.
1-A83-18-4B-03	Appx R	1 hr	Perform bounding test or reconfigure the configuration to a bounded test configuration.
1-C76-21-4B-01	BOP	1 hr	See Note 3.
1-C76-21-4B-02	Appx R	1 hr	See Note 4.
1-C76-21-4B-03	BOP	1 hr	See Note 3.
1-C76-21-4B-04	BOP	1 hr	See Note 3.
1-C76-21-4B-05	BOP	1 hr	See Note 3.
1-C76-21-4B-06	BOP	1 hr	See Note 3.
1-C76-21-4B-07	BOP	1 hr	See Note 3.
1-C76-21-4B-08	Appx R	1 hr	See Note 4.
1-C76-21-4B-09	BOP	1 hr	See Note 3.
1-C76-21-4B-10	BOP	1 hr	See Note 3.
1-C76-21-4B-11	Appx R	1 hr	See Note 4.
1-C76-21-4B-12	BOP	1 hr	See Note 3.
1-C76-21-4B-13	BOP	1 hr	See Note 3.
1-C76-21-4B-14	BOP	1 hr	See Note 3.
1-C76-21-4B-15	BOP	1 hr	See Note 3.
1-C76-22-4B-01	BOP	1 hr	See Note 3.
2-A81-13-4B-01	BOP	1 hr	See Note 1.
2-A81-13-4B-02	Appx R	1 hr	Use the Industry Application Guide to determine the minimum fire endurance capability that installed barrier configurations, which are bounded by test, can be reasonably expected to provide.
2-A81-15-4B-01	Appx R	1 hr	Use the Industry Application Guide to determine the minimum fire endurance capability that installed barrier configurations, which are bounded by test, can be reasonably expected to provide.

BOP = Balance of Plant fire barrier

Appx R = Appendix R fire barrier

RESOLUTIONS TO CONFIGURATIONS

CONFIGURATION ID	Intended Purpose:	RATING:	Resolution:
2-A81-15-4B-02	BOP	1 hr	See Note 3.
2-A81-16-4B-01	BOP	1 hr	See Note 3.
2-A82-08-4B-01	Appx R	1 hr	Use the Industry Application Guide to determine the minimum fire endurance capability that installed barrier configurations, which are bounded by test, can be reasonably expected to provide.
2-A82-08-4B-02	Appx R	1 hr	Use the Industry Application Guide to determine the minimum fire endurance capability that installed barrier configurations, which are bounded by test, can be reasonably expected to provide.
2-A82-10-4B-01	Appx R	1 hr	Use the Industry Application Guide to determine the minimum fire endurance capability that installed barrier configurations, which are bounded by test, can be reasonably expected to provide.
2-A83-18-4B-01	Appx R	1 hr	Use the Industry Application Guide to determine the minimum fire endurance capability that installed barrier configurations, which are bounded by test, can be reasonably expected to provide.
2-A83-18-4B-02	Appx R	1 hr	Use the Industry Application Guide to determine the minimum fire endurance capability that installed barrier configurations, which are bounded by test, can be reasonably expected to provide.
2-A83-18-4B-03	BOP	1 hr	See Note 1.
2-A83-18-4B-04	BOP	1 hr	See Note 1.
2-A83-18-4B-05	BOP	1 hr	See Note 1.
2-A83-19-4B-01	BOP	1 hr	See Note 3.
2-A83-19-4B-02	BOP	1 hr	See Note 3.
2-A83-19-4B-03	Appx R	1 hr	Use the Industry Application Guide to determine the minimum fire endurance capability that installed barrier configurations, which are bounded by test, can be reasonably expected to provide.
2-C76-21-4B-01	Appx R	1 hr	See Note 4.
2-C76-22-4B-01	BOP	1 hr	See Note 3.
2-C76-22-4B-02	Appx R	1 hr	See Note 4.
2-C76-22-4B-03	BOP	1 hr	See Note 3.
2-C76-22-4B-04	BOP	1 hr	See Note 3.
2-C76-22-4B-05	BOP	1 hr	See Note 3.
2-C76-22-4B-06	BOP	1 hr	See Note 3.
2-C76-22-4B-07	BOP	1 hr	See Note 3.
2-C76-22-4B-08	BOP	1 hr	See Note 3.
2-C76-22-4B-09	BOP	1 hr	See Note 3.
2-C76-22-4B-10	BOP	1 hr	See Note 3.
2-C76-23-4B-01	BOP	1 hr	See Note 3.
3-A81-13-4B-01	BOP	1 hr	See Note 1.
3-A81-15-4B-01	BOP	1 hr	See Note 3.
3-A82-11-4B-01	BOP	1 hr	See Note 2.
3-A82-11-4B-02	BOP	1 hr	See Note 1.
3-A83-17-4B-01	Appx R	1 hr	Use the Industry Application Guide to determine the minimum fire endurance capability that installed barrier configurations, which are bounded by test, can be reasonably expected to provide.
3-A83-17-4B-02	BOP	1 hr	See Note 1.
3-A83-18-4B-02	Appx R	1 hr	Perform bounding test or reconfigure the configuration to a bounded test configuration.
3-C76-20-4B-01	Appx R	1 hr	See Note 4.
3-C76-20-4B-02	Appx R	1 hr	See Note 4.
3-C76-21-4B-01	Appx R	1 hr	See Note 4.
3-C76-21-4B-02	Appx R	1 hr	See Note 4.

BOP = Balance of Plant fire barrier

Appx R = Appendix R fire barrier

RESOLUTIONS TO CONFIGURATIONS

CONFIGURATION ID	Intended Purpose:	RATING:	Resolution:
3-C76-22-4B-01	BOP	1 hr	See Note 3.
3-C76-22-4B-02	BOP	1 hr	See Note 3.
3-C76-22-4B-03	BOP	1 hr	See Note 3.
3-C76-22-4B-04	BOP	1 hr	See Note 3.
3-C76-22-4B-05	BOP	1 hr	See Note 3.
3-C76-22-4B-06	BOP	1 hr	See Note 3.
3-C76-23-4B-01	BOP	1 hr	See Note 3.
1-A84-01-4B-01	BOP	3 hr	See Note 2.
1-A86-05-4B-01	BOP	3 hr	See Note 2.
1-A86-05-4B-02	BOP	3 hr	See Note 2.
1-A86-08-4B-01	BOP	3 hr	See Note 3.
1-C79-19-4B-01	BOP	3 hr	See Note 3.
2-A84-01-4B-01	BOP	3 hr	See Note 2.
2-A87-04-4B-01	BOP	3 hr	See Note 2.
2-C79-20-4B-01	BOP	3 hr	See Note 3.
3-A86-07-4B-01	BOP	3 hr	See Note 2.
3-A86-07-4B-02	BOP	3 hr	See Note 2.
3-C79-19-4B-01	BOP	3 hr	See Note 3.
3-C79-19-4B-02	BOP	3 hr	See Note 3.
1-A82-12-05-01	BOP	1 hr	See Note 2.
1-A82-12-05-02	BOP	1 hr	See Note 1.
2-A82-10-05-01	BOP	1 hr	See Note 2.
3-A82-11-05-01	BOP	1 hr	See Note 2.

BOP = Balance of Plant fire barrier
Appx R = Appendix R fire barrier

Note 1: The fire rated Thermo-Lag located in analysis Area XVD (Fire Zones 42C and 52D), is not required for 10 CFR 50, Appendix R, Section III.G., due to crediting the use of Train A Safe Shutdown Equipment to safely shutdown the plant and the following additional manual operator actions: 1) Open power supply breakers to corresponding Train A Aux Feedwater Valves and Steam Supply Valves; 2) manually operate the Train A Aux Feedwater System per Emergency Operating Procedure (EOP) 4XEP-XRO05 (where X=1,2,3 for the applicable Unit), Attachment B-6, "Loss of all Feedwater); 3) manually operate the Train A ADVs per procedure 4XOP-XOP01, "Manual Operation of Air Operated Valves"; and 4) containment entry to manually open valve J-SIC-UV-653.

Note 2: The fire rated Thermo-Lag located in Analysis Area XVB (Fire Zones 37B, 39B, STR-G, and 37D) is not required for 10 CFR 50, Appendix R, Section III.G., due to crediting the use of Train A Safe Shutdown Equipment to safely shutdown the plant and the following additional manual operator actions: 1) Open power supply breakers to corresponding Train A Aux Feedwater Valves and Steam Supply Valves, and 2) manually operate the Train A Aux Feedwater System per EOP 4XEP-XRO05, Attachment B-6, "Loss of All Feedwater."

Note 3: The fire rated Thermo-Lag located in Analysis Area XVIIA and XIIC (Fire Zones 42B, 47B, 73, and 74B) is not required for 10 CFR 50, Appendix R, Section III.G., due to the crediting the use of Train A Safe Shutdown Equipment to safely shutdown the plant and the following additional manual operator actions: 1) Open power supply breakers to corresponding Train A Aux Feedwater Valves and Steam Supply Valves; 2) manually operate the Train A Aux Feedwater System per EOP 4XEP-XRO05, Attachment B-6, "Loss of All Feedwater"; and 3) manually operate the Train A ADVs per procedure 4XOP-XOP01, "Manual Operation of Air Operated Valves."

Note 4: PVNGS will evaluate the Appendix R analysis for the manual and Control Room operation of the non-class Aux Feedwater pump and alignment valves in the event of a fire in the MSSS (Fire Zones 72, 73, 74A, and 74B). The successful evaluation would eliminate the requirement for fire rated Thermo-Lag configurations in the MSSS building.