Attachment

SAIC-89/1643

TECHNICAL EVALUATION REPORT

ST. LUCIE UNIT 1

STATION BLACKOUT EVALUATION

TAC No. 68608

Science Applications International Corporation

An Employee-Owned Company

Final
August 17, 1990

Prepared for:

U.S. Nuclear Regulatory Commission
Washington, D.C. 20555

Contract NRC-03-87-029
Task Order No. 38

9008310002-XA

1710 Goodridge Drive, P.O. Box 1303, McLean, Virginia 22102 (703) 821-4300

Other SAIC Offices Albuquerque, Boston, Colorado Springs, Dayton, Huntsville, Las Vegas, Los Angeles, Oak Ridge, Orlando, Palo Alto, San Diego Seattle and Tucson

TABLE OF CONTENTS

TECHNICAL EVALUATION REPORT

ST. LUCIE UNIT 1
STATION BLACKOUT EVALUATION

1.0 BACKGROUND

On July 21, 1988, the Nuclear Regulatory Commission (NRC) amended its regulations in 10 CFR Part 50 by adding a new section, 50.63, "Loss of All Alternating Current Power" (1). The objective of this requirement is to assure that all nuclear power plants are capable of withstanding a station blackout (SBO) and maintaining adequate reactor core cooling and appropriate containment integrity for a required duration. This requirement is based on information developed under the commission study of Unresolved Safety Issue A-44, "Station Blackout" (2-6).

The staff issued Regulatory Guide (RG) 1.155, "Station Blackout," to provide guidance for meeting the requirements of 10 CFR 50.63 (7). Concurrent with the development of this regulatory guide, the Nuclear Utility Management and Resource Council (NUMARC) developed a document entitled, "Guidelines and Technical Basis for NUMARC Initiatives Addressing Station Blackout at Light Water Reactors," NUMARC 87-00 (8). This document provides detailed guidelines and procedures on how to assess each plant's capabilities to comply with the SBO rule. The NRC staff reviewed the guidelines and analysis methodology in NUMARC 87-00 and concluded that the NUMARC document provides an acceptable guidance for addressing the 10 CFR 50.63 requirements. The application of this method results in selecting a minimum acceptable SBO duration capability from two to sixteen hours depending on the plant's characteristics and vulnerabilities to the risk from station blackout. The plant's characteristics affecting the required coping capability are: the redundancy of the onsite emergency AC power sources, the reliability of onsite emergency power sources, the frequency of loss of offsite power (LOOP), and the probable time to restore offsite power.

In order to achieve a consistent systematic response from licensees to the SBO rule and to expedite the staff review process, NUMARC developed two generic response documents. These documents were reviewed and endorsed by the NRC staff (11) for the purposes of plant specific submittals. The documents are titled:

1. "Generic Response to Station Blackout Rule for Plants Using Alternate AC Power," and

2. "Generic Response to Station Blackout Rule for Plants Using AC Independent Station Blackout Response Power."

A plant-specific submittal, using one of the above generic formats, provides only a summary of results of the analysis of the plant's station blackout coping capability. Licensees are expected to ensure that the baseline assumptions used in NUMARC 87-00 are applicable to their plants and to verify the accuracy of the stated results. Compliance with the SBO rule requirements is verified by review and evaluation of the licensee's submittal and audit review of the supporting documents as necessary. Follow up NRC inspections assure that the licensee has implemented the necessary changes as required to meet the SBO rule.

In 1989, a joint NRC/SAIC team headed by an NRC staff member performed audit reviews of the methodology and documentation that support the licensees' submittals for several plants. These audits revealed several deficiencies which were not apparent from the review of the licensees' submittals using the agreed upon generic response format. These deficiencies raised a generic question regarding the degree of the licensees' conformance to the requirements of the SBO rule. To resolve this question, on January 4, 1990, NUMARC issued additional guidance as NUMARC 87-00 Supplemental Questions/Answers (16) addressing the NRC's concerns regarding the deficiencies. NUMARC requested that the licensees send their supplemental responses to the NRC addressing these concerns by March 30, 1990.

2.0 REVIEW PROCESS

The review of the licensee's submittal is focused on the following areas consistent with the positions of RG 1.155:

A. Minimum acceptable SBO duration (Section 3.1),

B. SBO coping capability (Section 3.2),

C. Procedures and training for SBO (Section 3.4),

D. Proposed modifications (Section 3.3), and

E. Quality assurance and technical specifications for SBO equipment (Section 3.5).

For the determination of the proposed minimum acceptable SBO duration, the following factors in the licensee's submittal are reviewed: a) offsite power design characteristics, b) emergency ac power system configuration, c) determination of the emergency diesel generator (EDG) reliability consistent with NSAC-108 criteria (9), and d) determination of the accepted EDG target reliability. Once these factors are known, Table 3-8 of NUMARC 87-00 or Table 2 of Regulatory Guide 1.155 provides a matrix for determining the required coping duration.

For the SBO coping capability, the licensee's submittal is reviewed to assess the availability, adequacy and capability of the plant systems and components needed to achieve and maintain a safe shutdown condition and recover from an SBO of acceptable duration which is determined above. The review process follows the guidelines given in RG 1.155, Section 3.2, to assure:

a. availability of sufficient condensate inventory for decay heat removal,

b. adequacy of the class 1E battery capacity to support safe shutdown,

c. availability of adequate compressed air for air-operated valves necessary for safe shutdown,

d. adequacy of the ventilation systems in the vital and/or dominant areas that include equipment necessary for safe shutdown of the plant,

e. ability to provide appropriate containment integrity, and

f. ability of the plant to maintain adequate reactor coolant system inventory to ensure core cooling for the required coping duration.

The licensee's submittal is reviewed to verify that required procedures (i.e., revised existing and new) for coping with SBO are identified and that appropriate operator training will be provided.

The licensee's submittal for any proposed modifications to emergency AC sources, battery capacity, condensate capacity, compressed air capacity, appropriate containment integrity and primary coolant make-up capability is reviewed. Technical Specifications and quality assurance set forth by the licensee to ensure high reliability of the equipment, specifically added or assigned to meet the requirements of the SBO rule, are assessed for their adequacy.

The licensee's proposed use of an alternate AC power source is reviewed to determine whether it meets the criteria and guidelines of Section 3.3.5 of RG 1.155 and Appendix B of NUMARC 87-00.

A normal SBO review is limited to the review of the licensee submittal; it does not include a concurrent site audit review of the supporting documentation. Such an audit may be warranted as an additional confirmatory

action. This determination would be made and the audit would be scheduled and performed by the NRC staff at some later date.

However, a limited number of concurrent site audit reviews were performed in order to obtain a benchmark for licensee conformance with the documentation requirements of the SBO rule. The St. Lucie site was one of the sites selected by the NRC for a concurrent audit review of the SBO supporting documentation. This audit was performed by a joint NRC/SAIC team, headed by an NRC staff member, on October 17-19, 1989 at Florida Power and Light's Juno Beach offices. The following evaluation was written in coordination with NRC staff and encompasses review of the licensee's submittal (10) and the licensee's response to questions raised during the site audit review (18). The licensee did not respond to the NUMARC 87-00 Supplemental Questions/Answers. The licensee claimed similar information had been provided in his response (18).

3.0 EVALUATION

The licensee, Florida Power and Light Company (FPL), stated (10) that the total loss of AC power event has been addressed in Section 15c.4 of the St. Lucie Unit 2 UFSAR (13), and that the analysis demonstrates that St. Lucie Unit 2 could successfully withstand a complete loss of AC power for at least 4 hours. Since the SBO rule, 10 CFR 50.63 (2)(b), exempts plants which have addressed the capability to withstand an SBO event as part of their licensing requirements, Unit 2 will not be evaluated in this report.

3.1 Proposed Station Blackout Duration

Licensee's Submittal

The licensee calculated (10 and 18) a minimum acceptable SBO duration of four hours for the St. Lucie Unit 1. The licensee stated that a modification is necessary to attain this proposed coping duration. This modification is described in Section 3.5.

The plant factors used to estimate the proposed SBO duration are as follows:

1. **Offsite Power Design Characteristics**

   The plant AC power design characteristic group is "P2" based on:

   a. Independence of offsite power system characteristics of "I2,"

   b. Estimated frequency of LOOPs due to severe weather (SW) places the plant in SW group "1,"

   c. Estimated frequency of LOOPs due to extremely severe weather (ESW) places the plant in ESW Group "4," and

d. Expected frequency of grid-related LOOPs of less than once per 20 years.

2. Emergency AC (EAC) Power Configuration Group

The licensee stated that the EAC power configuration of the plant is "A." The St. Lucie site is equipped with four emergency diesel generators (EDG) which are normally available to either unit's safe shutdown equipment. The licensee stated that following a modification (see Section 3.5) one EDG will be necessary to concurrently operate the safe shutdown equipment of both units following a LOOP.

3. Target Emergency Diesel Generator (EDG) Reliability

The licensee selected a target EDG reliability of 0.95 based on having a nuclear unit average EDG reliability of: a) greater than 0.90 for the last 20 demands for both units, b) greater than 0.94 for the last 50 demands for both units, and c) greater than 0.95 for the last 100 demands for both units consistent with the NUMARC 87-00 selection criteria. Additionally, FPL provided the following EDG failure counts:

EDG	Last 20 Demands	Last 50 Demands	Last 100 Demands
1A	1	1	3
1B	0	0	2
2A	1	1	1
2B	0	1	1

Review of Licensee's Submittal

Factors which affect the estimation of the SBO coping duration are: the independence of offsite power system grouping, the expected frequency of grid-related LOOPs, the estimated frequency of LOOPs due to SW and ESW

conditions, the classification of EAC, and the selection of EDG target reliability.

The licensee's estimated LOOP frequency due SW conditions is consistent with the guidance provided in NUMARC 87-00, Table 3-3, using single right-of-way transmission lines. The licensee stated that site independence of offsite power is "I2." The licensee stated (18) that, (see Figure 1), after the loss of the normal AC power source (the main generator), there is an automatic transfer of the safe shutdown buses to the preferred alternate power sources (offsite power through the start-up transformers). At this point, the St. Lucie Unit 1 safety bus 1A3 is powered from start-up transformer ST1A and safety bus 1B3 is powered from start-up transformer ST1B. The licensee also added:

1. Upon the loss (failure) of one start-up transformer (ST1A or ST1B), a manual transfer (through 1A4 or 2A4) is available to the Unit 2 start-up transformer (ST2A or ST2B) of the same train. This manual transfer can be accomplished in 30 minutes.

2. Following a loss of power to a start-up transformer (ST1 or ST2), the connected emergency bus in Unit 1 can be powered from one of the emergency buses in Unit 2 through the proposed class 1E cross-tie modification between the units.

Based on the above, we agree with the licensee that this configuration could place St. Lucie Unit 1 in group "I2" provided that each start-up transformer and unit auxiliary transformer has sufficient capacity to supply the loads on one division of buses in one unit and one division of emergency buses in the other. Otherwise, an "I3" offsite power grouping should be considered.

The licensee's estimation of remaining factors was not consistent with the guidance provided in RG 1.155 and NUMARC 87-00. The following summarizes our findings:

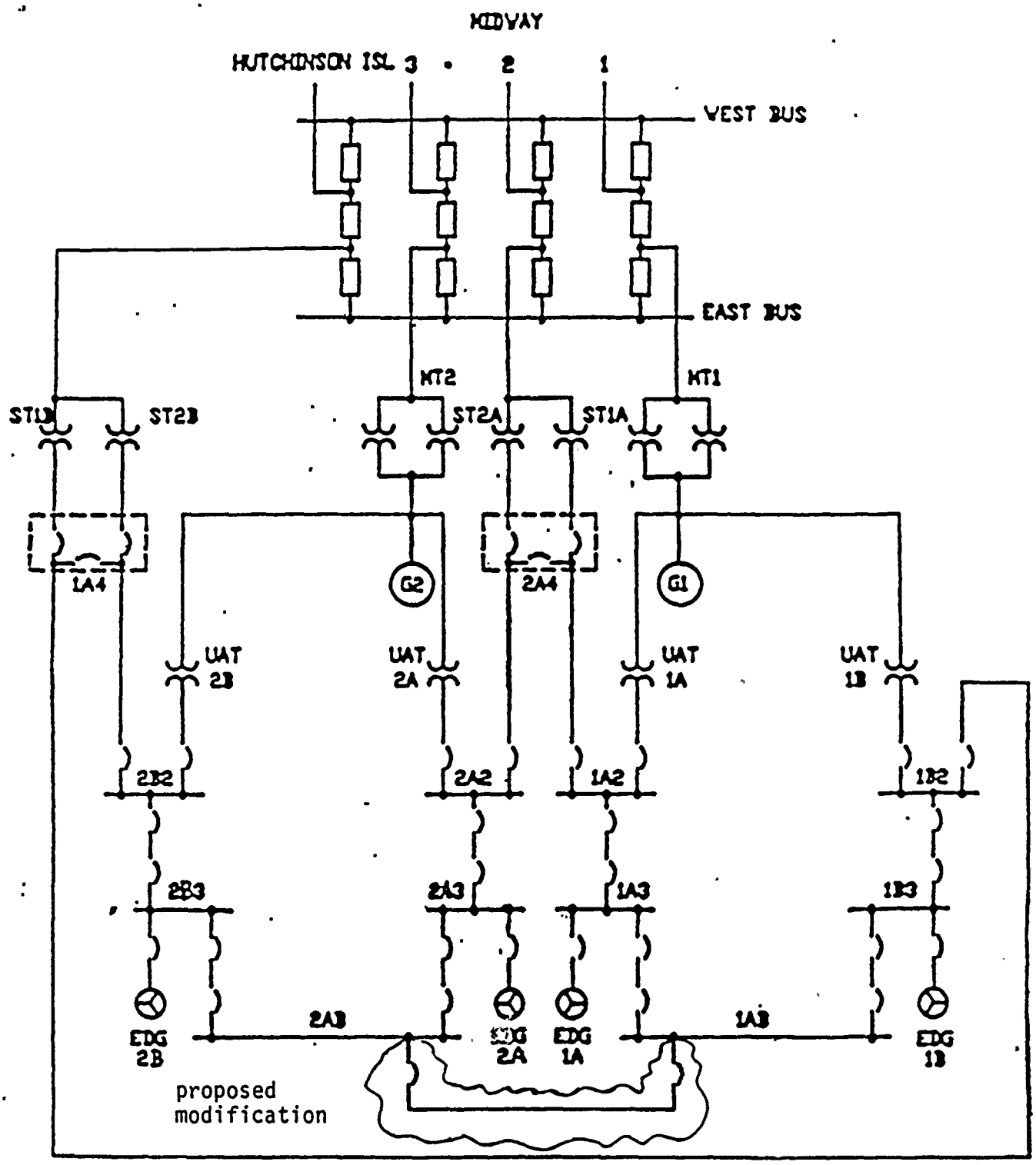

ST LUCIE PLANT
SIMPLIFIED ONE-LINE DIAGRAM

FIGURE 1

Emergency AC Power Configuration (EAC) Group -- The licensee stated that there are four redundant EDGs, and that only one is required to achieve and maintain safe shutdown at both units, therefore, the EAC power configuration is group "A." However, this assessment does not conform to the NUMARC 87-00, Section 3.2.2, Part 2B guidance, since one EDG does not have adequate capacity to carry the full LOOP loads (12 and 13) of both units. St. Lucie has two normally dedicated EDGs per unit which automatically respond to the LOOP-caused needs of the connected unit. This one-out-of-two per unit EDG configuration results in an EAC classification of group "C."

Extremely Severe Weather Group -- The licensee's estimation of ESW group "4" for the St. Lucie site is based on the results of two studies: The first, performed for the NRC by Sandia National Laboratory (SNL) (14), used wind data from the WASH-1300 report, and the second, performed by Dames and Moore (15), a consultant to FPL, used wind data from four separate studies: The National Hurricane Center/Neumann (NHC), the National Bureau of Standards (NBS), the University of Western Ontario (UWO) and the Federal Emergency Management Agency (FEMA). The results of these studies of the frequency of hurricane wind speeds greater than 125 mph range from 2.5E-4/yr. (FEMA data) to 7E-3/yr. (UWO data). These data indicate that the site should be in ESW group "4." If the National Oceanic and Atmospheric Administration (NOAA) data, which is given in Table 3-2 of NUMARC 87-00 and is based on 100 years of weather data, were to be used the site would be in ESW group "5," with an estimated frequency of ESW of 1.7E-2/yr. This frequency (1.7E-2/yr.) is about 2.5 times larger than the highest frequency estimated by the licensee. The licensee needs to resolve the difference between these results, or use ESW group "5" for the St. Lucie site per NUMARC 87-00 Table 3-2.

Offsite Power Design Characteristic (P) Group -- St. Lucie has not experienced any grid-related LOOPs of greater than 1/2 hour in duration. Occurrence of one such event would place the plant in the "P3" group. However, both NUMARC 87-00 and NUREG-1032 consider the St. Lucie site to be vulnerable to grid-related problems based on 2 short term LOOPs which

were considered to be grid-related. This would place the plant in Group "P3" without further analysis (Reference 7, Table 4). However, the licensee stated that in the last 10 years the southeastern Florida grid has been significantly strengthened by improved recovery procedures, additional 500 kV lines, and improved interconnections to gas turbines in the general area. Table 4 of RG 1.155 allows exemption from this automatic "P3" categorization of plants experiencing frequent LOOPs if the site has procedures to recover offsite power from a reliable source within approximately 1/2 hour following a grid failure. Florida Power & Light has grid-wide offsite power restoration procedures for supplying power to the St. Lucie site following a grid failure. The grid can be powered from several sources, including several gas turbine sites in southern Florida. Therefore, the licensee claims that the St. Lucie site should not be categorized as a "P3" site based on the past grid instability problems.

We believe that southeastern Florida is exposed to severe hurricanes and that the site geographic limitations hamper the availability of offsite power from multiple sources. (St. Lucie cannot get power from the east and essentially cannot get power from the south since a severe storm or grid problem is likely to effect all generating sites south of the site.) St. Lucie is susceptible to both weather-related (ESW "5") <u>and</u> grid-related events, therefore, it falls into the "P3" group. Since the licensee stated that the existing procedures will be modified to include criteria for shutdown of the units two hours prior to the arrival of hurricanes (16) consistent with the guidance provided in NUMARC 87-00, the site should be categorized as "P3*."

<u>EDG Target Reliability / Coping Duration</u> -- The licensee stated that the assignment of the EDG target reliability of 0.95 is supported by the diesel operability reports to INPO. These reports were not reviewed. A review of the information in NSAC-108 indicates that the EDGs at St. Lucie Units 1 and 2 have an average of 41 and 60 valid demands per calendar year and experienced no failures to start in the years 1983, 1984 or 1985. The licensee expects continued high diesel reliability

because the EDGs are continually prelubed and warmed, and states that a formalized EDG preventive maintenance program has been effective in maintaining high EDG reliability. The licensee's submittal stated that the plant meets the criteria for an EDG reliability goal of 0.95.

The licensee believes that the present EDG reliability program is sufficient to satisfy the guidelines of Regulatory Guide 1.155, Section 1.2 and NUMARC 87-00, Appendix D. The licensee presented a short write-up on the program (18) and a brief discussion during the audit review. From the available information, we cannot determine if the FPL program, which is based on quality control methods, satisfies the above guidelines. The licensee stated that following closure of the NRC/industry initiatives on EDG reliability (the Generic Safety Issue B-56) the new guidance will be reviewed and appropriate enhancements will be made to the current reliability program.

The results of our review indicate that the offsite power characteristic and the EAC configuration grouping of the site are "P3*" and "C," respectively. Using Table 3-8 of NUMARC 87-00, the site required coping duration would be four hours with an EDG target reliability of 0.975, or eight hours with an EDG target reliability of 0.95. The licensee's coping analysis was performed for a 4-hour SBO coping duration. We reviewed the licensee's submittal for a coping duration of eight hours as required for an EDG target reliability of 0.95.

3.2 Alternate AC (AAC) Power Source

Licensee's Submittal

The licensee stated that the AAC power source for the St. Lucie Unit 1 will be the emergency AC power source from the non-blacked out unit (Unit 2) which meets the criteria specified in Appendix B to NUMARC 87-00 and the assumptions in Section 2.3.1 of NUMARC 87-00. The AAC power source is available within 10 minutes of the onset of the SBO event by manual operation of cross-tie breakers from the control room. Each of

St. Lucie's two units have two dedicated EDGs. Upon the loss of offsite power and failure of Unit 1 EDGs to operate, either one of the Unit 2 EDGs is capable of providing power for safe shutdown of both units for four hours.

Review of Licensee's Submittal

Except for the following concern, we agree with the licensee's statement that the AAC power source (site EDGs) meets the criteria in Appendix B of NUMARC 87-00:

> Paragraph B.9 of Appendix B states," .... At a multi-unit site, except for 1/2 Shared or 2/3 emergency AC power configuration, an adjacent unit's Class 1E power source may be used as an AAC power source for the blacked-out unit if it is capable of powering the required loads at both units."

The guidance on the use of existing EDGs as AAC power sources at multi-unit sites is documented in RG 1.155, Section 3.3.5, NUMARC 87-00, Section 2.3.1(3) and further detailed under question 3.4 and B.3 in NUMARC 87-00 Supplemental Questions/Answers which was reviewed and endorsed by the NRC staff (16). The SBO rule states that at multi-unit sites where the combination of EAC power sources *'exceeds the minimum redundancy requirements for safe shutdown (non-DBA) of all units, the remaining EAC sources may be used as AAC sources'* provided that they meet the applicable requirements.

The rule statement requires *'minimum redundancy.'* This means that in order for an EDG to qualify as an AAC source there must be an EDG available in the NBO unit in addition to the number of EDGs required to meet the minimum EDG redundancy requirement for powering normal safe shutdown loads following a LOOP event. Thus, the EDGs in a two-unit site with two dedicated EDGs per unit would not qualify as AAC sources. Two EDGs per unit would meet only the minimum redundancy requirement, and there is no excess EDG.

However, there are some plants at multi-unit sites which have EDGs that just meet the minimum redundancy but each EDG has sufficient capacity to power all the normal LOOP loads of the NBO unit and also has sufficient excess capacity to power the required safe shutdown loads of the SBO unit. Recognizing the existence of this type of situation, the staff has interpreted the *'literal'* excess EDG redundancy requirement of the SBO rule to allow large capacity EDGs to qualify as AAC source, provided other applicable requirements are met.

In order to take credit for this interpretation, the NRC staff's basic position has been (17, 19 and 20) that:

1. no action should be taken that would exacerbate the already difficult situation in the NBO unit. Any actions that make operator tasks more difficult such as load switching or disablement of information readouts or alarms in the control room are also considered to be a degradation of normal safe shutdown capability for LOOP in the NBO unit. And,

2. excess capacity of the EDG being designated as an AAC source should not be the capacity made available by shedding or not powering normal safe shutdown loads in the NBO unit. Examples of such loads are: motor driven auxiliary feedwater pumps; heating, ventilation and air conditioning loads; the power supply of the plant computer; one or more sets of redundant instrumentation; etc. The shedding of such loads constitutes degradation of the normal safe shutdown capability of the NBO unit.

It is not in the interest of safety to reduce the capability to handle various eventualities in one unit for the purpose of meeting the SBO rule in another unit. Each unit must meet the SBO rule on its own merits without reducing another unit's capability to respond to its own potential problems.

The excess capacity of the EDG in the NBO unit that qualifies it as an AAC source is, therefore, *'only that available capacity within the normal continuous rating but above the EDG load represented by the complete contingent of safety related and non-safety related loads normally expected to be available for the LOOP condition.'*

During the site audit review the licensee stated that each of the Unit 2 EDGs has sufficient capacity to power the required loads at both units. In support of this statement the licensee provided the following load parameters representing the hot standby required loads (in kW):

EDG	2000 hr. Rating	Unit 2 LOOP Loads	Unit 1 SBO Loads
2A	3935	1954	897
2B	3935	1954	897

The licensee also provided a breakdown of the loads on each EDG. Our review of these loads reveals that, the licensee's LOOP loads do not include loads such as: auxiliary feedwater pump, residual heat removal pump, reactor coolant pump oil lift pump, diesel oil transfer pump, instrument air compressor and dryer, boric acid makeup pump, etc.. The licensee also did not consider the instrument air (IA) compressor and the associated cooling and drying ancillary loads in the SBO unit.

To conform to the guidance stated above, the LOOP loads at Unit 2, excluding the short-term MOV loads, are estimated at 2802.5 kW using the itemized LOOP loads in Table 8.3-2 of the plant UFSAR (13). If we were to add the corrected SBO loads (1133.5 kW), which includes an IA compressor and the second battery charger as their needs are indicated by the licensee, to the LOOP loads (2802.5 kW), then an EDG with a minimum 2000 hour rating capacity of 3936 kW would be needed to conform to the above guidance. The licensee stated that each EDG at Unit 2 is rated at 3935 kW for 2000-hour operation per year.

Based on this evaluation, it appears that the each EDG essentially has sufficient capacity to supply the needed loads in the NBO unit and the selected loads in the SBO unit. However, since no excess capacity is available, the licensee needs to verify that no additional loads other than those included under item 4 in Section 3.3.

Additionally, the licensee needs to demonstrate by a test that the AAC power source can power the shutdown buses within 10 minutes of the onset of an SBO, in accordance with NUMARC 87-00 Section 7.1.2 and RG 1.155, Section 3.3.5.3. During the site audit review, the licensee stated that this test would be performed as part of the modification.

3.3 Station Blackout Coping Capability

The licensee did not provide any information regarding the Unit 1 coping capability in its submittal dated April 17, 1989 (10). During the site audit review the licensee stated that since the AAC power source will be available within 10 minutes, the coping evaluations for class 1E battery capacity, compressed air, and containment isolation need not be addressed per 10 CFR 50.63 (c)(2). We consider this to mean that functions needed to cope an SBO are available and adequately powered for the required duration.

The plant coping capability with an SBO event for the required duration of eight hours is assessed based on the following results:

1. **Condensate Inventory for Decay Heat Removal**

   Licensee's Submittal

   During the site audit review, the licensee stated that St. Lucie technical specifications require a minimum condensate storage tank (CST) level of 116,000 gallons in Unit 1 and 307,000 gallons in Unit 2. The licensee stated that this volume of water exceeds the quantity required to cope with an SBO of 4-hour duration and provided justifications from analyses performed in support of the

plants' UFSARs (12 and 13). Based on this information, the licensee stated that Unit 1 needs ~62,000 gallons of condensate to remove decay heat during a 4-hour SBO event (18).

Review of Licensee's Submittal

Using NUMARC 87-00, Section 7.2.1, we estimated that St Lucie Unit 1 would need 97,905 gallons of condensate to remove decay heat during an 8-hour SBO event. This estimate is based on a maximum reactor thermal capacity of 2,754 MWt, or at 102% of the rated power. Therefore, the minimum CST level ensures adequate condensate water for coping with an SBO with a duration of 8 hours for each unit. The excess inventory available in the CST can be used to assist in SBO recovery.

2. Class 1E Battery Capacity

Licensee's Submittal

During the audit review, licensee stated that since the AAC is available within 10 minutes from the onset of an SBO event, the battery calculations do not need to be addressed per guidance provided in NUMARC 87-00, Section 7.1.2, and 10 CFR Part 50.63 (c)(2).

Review of Licensee's Submittal

The battery chargers are available as soon as the AAC source is on line, thus the licensee will have adequate DC power to cope with an SBO with a duration of eight hours. The licensee stated that they are not shedding any DC loads in the non-blacked out unit or the blacked-out unit that could degrade that units' safe shutdown capability.

3. Compressed Air

Licensee's Submittal

During the audit review, the licensee stated that the AAC power source will be available within 10 minutes and will power an air compressor which supports the air operated valves needed to cope with an SBO event.

Review of Licensee's Submittal

The instrument air system will be powered throughout the event. Therefore, we agree with the licensee that adequate instrument air is available to cope with an SBO.

4. Effect of Loss of Ventilation

Licensee's Submittal

During the audit review, the licensee stated that the control room heating, ventilation and air conditioning (HVAC), and the following ventilation systems will be operating during an SBO:

	Ventilation Fans	Unit
1.	Containment Fan Coolers	1/2
2.	Intake Cooling Water Building Cooling Fan	2
3.	Auxiliary Building Cooling Fan	1/2
4.	ECCS Area Exhaust Fan	1/2
5.	Reactor Cavity Cooling Fan	1/2
6.	Reactor Support Cooling Fan	1/2
7.	Electrical Equipment Room Supply Fan	1/2
8.	Electrical Equipment Room Exhaust Fan	1/2
9.	Electrical Equipment Room Roof Vent	1/2
10.	Battery Room Exhaust Fan	1/2

Review of Licensee's Submittal

During the audit review the licensee stated that he was not ready to discuss the effects of loss of ventilation in detail. The licensee stated that additional information concerning room cooling during an SBO will be provided. Additional information has yet to be provided.

Our analysis of the capacity of the AAC power source indicates that there is no additional available capacity to power ventilation systems other than those mentioned above. Therefore, if the licensee determines that additional ventilation is needed to ensure the operability of SBO equipment in other areas, the licensee needs to provide a separate AAC power source to supply the needed loads.

5. Containment Isolation

Licensee's Submittal

During the audit review, the licensee stated that all buses would be energized upon the availability of AAC power. The licensee

stated that this would allow for the normal establishment and verification of appropriate containment integrity.

Review of Licensee's Submittal

Since all AC and DC buses can be energized from the AAC power source, we agree that the licensee could be able to establish and verify appropriate containment integrity during an SBO event.

6. Reactor Coolant Inventory

Licensee's Submittal

During the site audit review the licensee stated that the AAC source powers the necessary make-up system to maintain adequate reactor coolant system inventory to ensure that the core is cooled for the required coping duration.

Review of Licensee's Submittal

The reactor coolant system (RCS) losses which the licensee needs to consider are:

1. 25 gpm per pump losses through reactor coolant pump seals per NUMARC guidelines,

2. maximum allowable RCS leakage per plant technical specifications.

St. Lucie has four reactor coolant pumps which will lose a total of 100 gpm seal leakage from the reactor coolant system (RCS). The technical specification maximum allowable leakage (sum of identified and unidentified) is estimated to be 12 gpm. Therefore, the licensee needs to provide a make-up system with a minimum capacity of 112 gpm to maintain the RCS inventory provided

that no RCS cooldown is initiated. The licensee's SBO loads only consider powering one charging pump; a positive displacement pump with a 44 gpm capacity.

The licensee did not provide any analysis to demonstrate that the core will not be uncovered during an SBO event with one charging pump operating. Our analytic experience with similar plants indicates that an RCS leakage of 112 gpm will not result in core uncovering during an 8-hours SBO event if a 44 gpm charging pump is kept operating and the RCS cooldown is minimized. However, an audit may be required to ensure that the licensee has an applicable evaluation which confirms our finding.

3.4 Proposed Procedures and Training

Licensee's Submittal

The licensee stated (10) that the station blackout and other applicable procedures will be revised. The licensee added (18) that FPL procedures meet or exceed NUMARC 87-00 guidelines, however, site procedures will be modified and revised to include:

1. procedures to electrically cross-connect units in 10 minutes from the control room and to mitigate the effects of a unit blackout

2. procedures to commence unit shutdown 2 hours priors to the projected onset of the hurricane force winds at the site.

The licensee stated that a procedure which will allow the operators to use any one of four EDGs to safely shut down and maintain both nuclear units in hot standby conditions for four hours will be developed (10).

The licensee stated that procedure changes will be completed within one year of the notification from the NRC staff per 10 CFR 50.63(c)(3).

This implementation is currently planned to be completed by fourth quarter of 1991.

The licensee stated that existing plant policies and guidelines for training will be used upon issuance of new and revised procedures. The licensee also stated that these policies will ensure that operators are adequately prepared to cope with SBO events.

Review of Licensee's Submittal

The review team did not examine the affected procedures or training. We consider these procedures as plant specific actions concerning the required activities to cope with an SBO. It is the licensee's responsibility to revise and implement these procedures, as needed, to mitigate an SBO event and to assure that these procedures are complete and correct and that the associated training needs are carried out accordingly.

3.5 Proposed Modifications

Licensee's Submittal

The proposed modification entails adding class 1E 4.16 kV breakers and buswork to tie the existing safety-related swing buses (1AB and 2AB) of the two units. (See Figure 1) The licensee stated that since each swing bus is capable of receiving power from either of the EDGs in that unit, at least one swing bus is always assured a source of power. The licensee stated that a safety bus on the blacked out unit could then be reenergized via the proposed cross-tie within ten minutes from the control room. The licensee stated that the modification and associated procedural changes are currently scheduled for the fourth quarter of 1991.

Review of Licensee's Submittal

The licensee stated that this design change will be implemented in accordance with the applicable design and licensing requirements to comply with the guidance of RG 1.155 and NUMARC 87-00 including the revised guidance (16). This design change will significantly improve the reliability of the site AC power system.

3.6 Quality Assurance and Technical Specifications

Quality Assurance

The licensee states (18) that:

"Quality Assurance (QA) guidance for St. Lucie station blackout modifications will be dictated by 10CFR50 Appendix B requirements under the current QA program at St. Lucie. This meets or exceeds criteria in Regulatory Guide 1.155."

Based on our audit, it appears that all equipment necessary to cope with an SBO event is covered by a QA program that is consistent with the guidance of Appendices A and B of RG 1.155.

Technical Specification

The licensee did not identify any changes to current technical specification for the involved SBO equipment. Our review of the licensee's approach indicates that the equipment necessary to cope with an SBO (EDGs, AFW, CST, batteries, etc.) is already covered by technical specification.

4.0 CONCLUSIONS

Based on our review of the licensee's submittal and the related supporting documents and discussions during a site audit for the St. Lucie Unit 1 we find that the submittal conforms to the requirements of the SBO rule and the guidance of RG 1.155 with the following exceptions:

1. **Proposed Station Blackout Duration**

a. Offsite Power Design Characteristic Group

The St. Lucie site has experienced two short-term grid-related LOOPs in the last 20 years, and based on its geographical position NRC data it is categorized as ESW group "5". Either the grid-related LOOP frequency of greater than one in 20 or the ESW group "5" in conjunction with the plant's pre-hurricane shutdown procedures, would place the plant in group "P3*." The licensee claims that the site is in ESW group "4" and requests an exemption from the grid related LOOP frequency criterion based on grid improvements. However, the preponderance of evidence indicates that the plant is in group "P3*" (see Section 3.1).

b. Emergency AC Power Configuration (EAC) Group

The licensee claims that the EAC configuration is "A." Our review indicates that it should be classified as an EAC group "C." Each EDG does not have sufficient capacity to support all the equipment required to be operational after a LOOP at both units consistent with the guidance provided in NUMARC 87-00 Supplemental Questions/Answers.

c. Independence of Offsite Power (I) Group

The licensee claims that St. Lucie should be considered as "I2" grouping. For the site to be considered as "I2" the licensee

needs to verify that each of the unit auxiliary or start-up transformers has sufficient capacity to support the normal loads on division of buses in one unit and the safe shutdown loads on one division of emergency buses in other unit. Otherwise, an "I3" classification should be considered. However, the "I" classification does not change the determination of "P3*."

d. SBO Coping Duration and EDG Target Reliability

Based on items a and b, the required coping duration of St Lucie Unit 1 with an EDG target reliability of 0.95 is eight hours. However, the licensee can claim a required coping duration of four hours if it selects an EDG target reliability of 0.975.

2. Alternate AC Power Source

The licensee needs to demonstrate, by a test, that the AAC power source can power the shutdown buses within 10 minutes of the onset of an SBO, in accordance with RG 1.155, Section 3.3.5.3.

3. Emergency Diesel Generator Reliability Program

The licensee's submittal does not document the conformance of the plant's EDG reliability program with the guidelines of Regulatory Guide 1.155, Section 1.2 and NUMARC 87-00, Appendix D. During the site audit review the licensee stated that the present EDG reliability program is sufficient to satisfy the above guidance. The licensee stated, however, that a reliability program will be evaluated against the above guidance and will be adjusted to meet the intent.

4. Effects of Loss of Ventilation

The licensee has not completed the evaluation to determine the effects of loss of ventilation during an SBO event. Our analysis

of the proposed AAC power source indicates that it does not have additional capacity to support ventilation systems other than those mentioned in Section 3.3. Therefore, if the licensee determines that additional ventilation is needed to ensure the operability of SBO equipment in other areas, the licensee needs to provide a separate AAC power source to supply the needed loads.

5.0 REFERENCES

1. The Office of Federal Register, "Code of Federal Regulations Title 10 Part 50.63," 10 CFR 50.63, January 1, 1989.

2. U.S. Nuclear Regulatory Commission, "Evaluation of Station Blackout Accidents at Nuclear Power Plants - Technical Findings Related to Unresolved Safety Issue A-44," NUREG-1032, Baranowsky, P. W., June 1988.

3. U.S. Nuclear Regulatory Commission, "Collection and Evaluation of Complete and Partial Losses of Offsite Power at Nuclear Power Plants," NUREG/CR-3992, February 1985.

4. U.S. Nuclear Regulatory Commission, "Reliability of Emergency AC Power System at Nuclear Power Plants," NUREG/CR-2989, July 1983.

5. U.S. Nuclear Regulatory Commission, "Emergency Diesel Generator Operating Experience, 1981-1983," NUREG/CR-4347, December 1985.

6. U.S. Nuclear Regulatory Commission, "Station Blackout Accident Analyses (Part of NRC Task Action Plan A-44)," NUREG/CR-3226, May 1983.

7. U.S. Nuclear Regulatory Commission Office of Nuclear Regulatory Research, "Regulatory Guide 1.155 Station Blackout," August 1988.

8. Nuclear Management and Resources Council, Inc., "Guidelines and Technical Bases for NUMARC Initiatives Addressing Station Blackout at Light Water Reactors," NUMARC 87-00, November 1987.

9. Nuclear Safety Analysis Center, "The Reliability of Emergency Diesel Generators at U.S. Nuclear Power Plants," NSAC-108, Wyckoff, H., September 1986.

10. Conway, W. F., letter to the U. S. Nuclear Regulatory Commission, "St. Lucie Units 1 and 2, Dockets 50-335 and 50-389, Information to Resolve Station Blackout," FPL L-89-144, 10 CFR 50.63, April 17, 1989

11. Thadani, A. C., Letter to W. H. Rasin of NUMARC, "Approval of NUMARC Documents on Station Blackout (TAC-40577)," dated October 7, 1988.

12. Florida Power & Light, "Final Safety Analysis Report - St. Lucie Unit 1"

13. Florida Power & Light, "Final Safety Analysis Report - St. Lucie Unit 2"

14. U.S. Nuclear Regulatory Commission, "Shutdown Decay Heat Removal Analysis of a Westinghouse 3-Loop Pressurized Water Reactor - Case Study," NUREG/CR-4762, dated 1986.

15. Dames & Moore, "Updated Report - Probabilistic Hurricane Analyses Methodology Development - Turkey Point and St. Lucie Nuclear Power Plants for Florida Power & Light Company", January 1989

16. Thadani, A. C., letter to A. Marion of NUMARC, "Publicly Noticed Meeting December 27, 1989," dated January 3, 1990, (Confirming "NUMARC 87-00 Supplemental Questions/Answers," December 27, 1989).

17. Rosa, F., Memorandum to Docket concerning Beaver Valley Units 1 and 2, "Meeting Summary - Meeting of February 22, 1990, on Station Blackout Issues (TAC 68510/68511)," Docket Nos. 50-334 and 50-412, dated March 6, 1990.

18. Sager, D. A., letter to the U. S. Nuclear Regulatory Commission, "St. Lucie Units 1 and 2, Dockets 50-335 and 50-389, Information to Resolve Station Blackout," FPL L-90-58, 10 CFR 50.63, dated March 7, 1990.

19. Tam, P. S., Memorandum for, "Daily Highlight-Forthcoming Meeting with NUMARC on Station Blackout (SBO) Issues (TAC 40577)," dated April 25, 1990 (Providing a Draft Staff Position Regarding Use of Emergency AC

Power Sources (EDGs) as Alternate AC (AAC) Power Sources, dated April 24, 1990).

20. Russell, W. T., letter to W. Rasin of NUMARC, "Station Blackout," dated June 6, 1990.