INSERVICE INSPECTION

SECOND TEN YEAR SUMMARY PROGRAM

DOCUMENT NO. MCI-PSL-100

REVISION NO. 0

DATE : 9/01/87

PREPARED BY

FLORIDA POWER & LIGHT COMPANY
MATERIALS, CODES AND INSPECTIONS SECTION
700 UNIVERSE BLVD.
JUNO BEACH, FLORIDA 33408

FOR

PLANT ST. LUCIE UNIT 1
P.O.BOX 128
FT. PIERCE, FLORIDA. 33454

COMMERCIAL SERVICE DATE : 21 DECEMBER 1976

NRC DOCKET NUMBER : 50-335

PREPARED BY : G.P.ALEXANDER
ISI SPECIALIST

REVIEWED BY : Edward L Anderson DATE 9-2-87
ISI ENGINEER

APPROVED BY : _____ DATE 9/2/87
SECTION SUPERVISOR - C & P

AUTHORIZED BY : Joseph E Moaba DATE 9/2/87
MANAGER - MCI

8709090272 870902
PDR ADOCK 05000335
Q PDR

ABSTRACT

This document describes the basis and plans for the Second Ten Year Inservice Inspection Summary Program for St. Lucie Unit 1. This summary addresses the requirements of the ASME B&PV Code Section XI,1983 Edition through the Summer 1983 Addenda, and is subject to the limitations and modifications stated in 10 CFR 50.55a (b)(2)(i). In addition, Code Case N - 408, Alternative Rules for Examination of Class 2 Piping Section XI, Division 1 is incorporated as applicable. Requirements for augmented examinations are also addressed.

As permitted by 10 CFR 50.55a (g)(4)(iv), FP&L may elect to invoke the requirements set forth in subsequent editions and addenda that are incorporated by reference in 10 CFR 50.55a (b),subject to the limitations and modifications listed in 10 CFR 50.55a(b), and subject to Commission approval.

Included in this summary are the applicable Relief Requests and tables identifying all items subject to examination by Code Category and item number.

TABLE OF CONTENTS

TABLE OF CONTENTS

TITLE PAGE

ABSTRACT

TABLE OF CONTENTS

RECORD OF REVISIONS

LIST OF ABBREVIATIONS

1.0 INTRODUCTION

1.1 General
1.2 Applicable Editions & Addenda to Section XI
1.3 System Classification
1.4 Inspection Program

2.0 Development of the Inspection Program

2.1 Class 1
2.1.1 ASME Code Exemptions Employed
2.1.2 Component/Piping Examination Development
2.1.3 Component Supports
2.1.4 System Pressure Tests
2.1.5 Instrumented Inspection Technique
2.1.6 Repair and Replacement

2.2 Class 2
2.2.1 ASME Code Exemptions Employed
2.2.2 Component/Piping Examination Development
2.2.3 Component Supports
2.2.4 System Pressure Tests
2.2.5 Instrumented Inspection Technique
2.2.6 Repair and Replacement

2.3 Class 3
2.3.1 ASME Code Exemptions Employed
2.3.2 Component Supports
2.3.3 System Pressure Tests
2.3.4 Instrumented Inspection Technique
2.3.5 Repair and Replacement

2.4 Flaw Indications

2.5 Class MC Components

3.0 Relief Requests

3.1&2 General
3.3 Format
3.4 Relief Request Tables
3.5 List of Applicable Relief Requests

4.0 Evaluation Criteria

4.1 Class 1 Acceptance Standards
4.2 Class 2 Acceptance Standards
4.3 Class 3 Acceptance Standards
4.4 Acceptance Standards for Supports (Class 1,2,3)

5.0 Submittal Summary

5.1 Description of ISI Plan Format
5.2 Description of Summary Submittal Tables

6.0 Records and Data Management

7.0 Appendices

A CLASS 1 EXAMINATION SUMMARY TABLES

B CLASS 2 EXAMINATION SUMMARY TABLES

C CLASS 3 EXAMINATION SUMMARY TABLES

D CLASS 1 HANGER SUMMARY TABLES

E CLASS 2 HANGER SUMMARY TABLES

F CLASS 3 HANGER SUMMARY TABLES

G ASME CODE CASES

8.0 Code Boundary Drawings

LIST OF FIGURES

5.1.1 Inservice Inspection Plan Table
5.2.1 Summary Submittal Table

RECORD OF REVISIONS

REV. NO.	DATE	SECTION	PAGE PARA.	DESCRIPTION REASON FOR CHANGE	APPROVAL/ DATE
0	9/01/87	ORIGINAL ISSUE			

ABBREVIATIONS

Listed below are the abbreviations utilized in this document:

AFW	AUXILARY FEEDWATER
ASME	AMERICAN SOCIETY OF MECHANICAL ENGINEERS
ASB	AUXILIARY SYSTEMS BRANCH (formerly APCSB)
B&PV	BOILER & PRESSURE VESSEL CODE
BTP	BRANCH TECHNICAL POSITION
C	CONDENSATE SYSTEM
CC	COMPONENT COOLING WATER SYSTEM
CEDM	CONTROL ELEMENT DRIVE MECHANISM
CFR	CODE OF FEDERAL REGULATIONS
CRV	CODE REQUIRED VOLUME
C&PG	CODES & PROGRAMS GROUP
CW	INTAKE COOLING WATER SYSTEM
ECT	EDDY CURRENT TESTING
FP&L	FLORIDA POWER & LIGHT COMPANY
FSAR	FINAL SAFETY ANALYSIS REPORT
ISI	INSERVICE INSPECTION
ID	INSIDE DIAMETER
HPSI	HIGH PRESSURE SAFETY INJECTION
JNS	JUNO NUCLEAR ENERGY SERVICES
LPSI	LOW PRESSURE SAFETY INJECTION
MSIV	MAIN STEAM ISOLATION VALVE
MCI	MATERIALS,CODES & INSPECTIONS GROUP
MFW	FEEDWATER SYSTEM
MSS	MAIN STEAM SYSTEM
NRC	NUCLEAR REGULATORY COMMISSION

ABBREVATIONS (cont.)

NPS	NOMINAL PIPE SIZE
OD	OUTSIDE DIAMETER
P&ID	PIPING & INSTRUMENTATION DIAGRAM
PRZR	PRESSURIZER
PSL-1	PLANT ST. LUCIE UNIT 1
RPV	REACTOR PRESSURE VESSEL
RCP	REACTOR COOLANT PUMP
SRP	STANDARD REVIEW PLAN
T	THICKNESS OF COMPONENT, PIPE, ETC.
USAS	USA STANDARD
VT	VISUAL TECHNIQUE I.E. VT-1,VT-2

1.0 INTRODUCTION

1.1 General

1.1.1 This Summary Submittal describes the St. Lucie Unit 1 Second Ten Year Inservice Inspection Program.This Program will be implemented for the Second Inspection Interval which starts 11 Feb.1988,and ends 11 Feb.1998.

The Inspection Program, which consists of ASME Class 1,2,and 3 systems, components, and related supports, is being developed giving due consideration to the following documents:

* 10 CFR 50.55 (a)
* Section XI of the ASME Code
* Section III of the ASME Code
* Section V of the ASME Code
* Code Case N-408
* Branch Technical Position, ASB 3-1
* Standard Rreview Plan 6.6, Section I,II
* USNRC Regulatory Guides

  Regulatory Guide 1.147
  Regulatory Guide 1.26
  Regulatory Guide 1.14
  Regulatory Guide 1.150
  Regulatory Guide 1.65
  Regulatory Guide 1.83

* St.Lucie Unit 1 - Technical Specifications
* St.Lucie Unit 1 - Final Safety Analysis Report

1.1.2 The program for Inservice Testing of Class 1, 2, and 3 pumps and valves is addressed separately.

1.1.3 The First Ten Year Inservice Inspection was conducted in accordance with the following editions of Section XI.

A. First Period (40 months) - 1970 Edition thru the Winter 1970 Addenda

B. Second and third periods - 1974 Edition through Summer -1975 Addenda for BOP Components (see reference 1 and 2).

C. RPV Examinations to 1977 Edition through S - 1978 addenda, and R.G. 1.150 Rev. 01 (see reference 3).

D. System Pressure Tests, 1980 Edition through W - 1981 Addenda (see reference 4 and 5)

1.1.3(cont.)
The correspondence referenced below relates to NRC acceptance to code changes:

1. FP&L letter: L-77-302, dated 7/1/77 and 9/87
2. FP&L letter: L-81-203, dated 9/21/81
3. FP&L letter: L-83-254, dated 4/22/83
4. FP&L letter: L-85-149, dated 4/5/85
5. NRC TAC-Nos. 59918 and 59919

1.2 Applicable Editions and Addenda to Section XI

Pursuant to Title 10 of the Code of Federal Regulations, part 50, paragraph 50.55 (a),the Inservice Inspection requirements applicable to nondestructive examination and system pressure testing at St.Lucie Unit 1 are based on the rules set forth in the 1983 Edition of ASME Section XI through Summer 1983 Addenda, hereafter referenced to as ASME Section XI.

As permitted by 10 CFR 50.55a (g)(4)(iv), FP&L may elect to invoke the requirements set forth in subsequent editions and addenda that are incorporated by reference in 10 CFR 50.55a (b), subject to the limitations and modifications listed in 10 CFR 50.55a(b), and subject to Commission approval.Portions of editions and addenda may be used provided that all related requirements of the respective editions and addenda are met.

It is FP&L's intent to continually evaluate and apply,as appropriate changes in adopted Code editions and addenda which will improve the overall quality and safety of the ST.Lucie Unit 1 nuclear power plant.

1.3 System Classification

The Construction Permit for St. Lucie Unit 1 was issued in July, 1970. The Commercial Operating License was issued in March 1976. Florida Power and Light Company is the owner of record.

Vessels, piping,pumps,and valves were built and installed according to the rules of ASME Section III and USAS B31.7 for those systems classified as Class 1, 2, and 3.

The system classification used as a basis for the Inservice Inspection Plan are based on the requirements of 10 CFR 50.2 (v) and the Regulatory Guide 1.26.

Class 1 System Boundaries were developed based on 10 CFR 50.2 (v).

Class 2 and 3 System Boundaries were developed based on Regulatory Guide 1.26.

Code Boundary diagrams are provided to show the specific boundaries for Class 1, 2, and 3 systems in Section 8 of this Submittal.

1.4 Inspection Program

Examinations for the Second Ten Year Interval will be scheduled in accordance with Inspection Program B, as described in IWA-2400 of ASME Section XI, for all Class 1, 2,and 3 systems, components, and supports.

2.0 DEVELOPMENT OF INSPECTION PLAN

This section is the detailed description of the Inspection Plan basis for each component and/or system to be examined.

2.1 Class 1 Systems

The Class 1 System Boundaries are developed based upon the requirements of 10 CFR 50.2(v), and the St.Lucie Unit 1 FSAR. The systems/ Components to be examined in the Class 1 System are described in detail below:

2.1.1 ASME Code Exemptions Employed

IWB-1220: The following components (or parts of components) are exempted from the volumetric and surface examination requirements of IWB-2500:

(a) Components that are connected to reactor coolant system and part of the reactor coolant pressure boundary and are of such a size and shape so that upon postulated rupture the resulting flow of coolant from the reactor coolant system under normal operating conditions is within the capacity of makeup systems which are operable from onsite emergency power;

(b) component connections, piping, and associated valves of 1 inch nominal pipe size and smaller, except for steam generator tubing;

(c) Reactor head connections and associated piping, 2 in.nominal pipe size and smaller,made inaccessible by control rod drive penetrations.

2.1.2 Component/Piping Examination Development

Reactor Pressure Vessel

The longitudinal weld seams (9), shell side of the flange to shell weld, upper shell to intermediate shell circumferential weld, intermediate to lower shell circumferential weld, lower shell to bottom head circumferential weld, bottom head disk weld, and bottom head meridional welds(6), nozzle to shell welds(6), nozzle inner radii(6), nozzle to extension piece and extension piece to pipe circ.welds are examined from the I.D. surface using remote examination equipment and techniques. Those areas of the bottom head which are obstructed from a complete I.D. examination are manually examined from the O.D. surface to the maximum extent possible. The flange to upper shell weld is examined from the upper shell I.D. surface and from the flange seal surface manually(UT). The flange ligaments are examined manually from the mating surface. Closure studs are manually examined using surface and volumetric techniques when removed.

Reactor Pressure Vessel (cont.)

Relief Request (RR-1) covers the areas which are not examinable.

Core support lugs and the remainder of the vessel interior are examined visually utilizing remote television equipment. A permanent visual record of these areas is recorded.

The Core Barrel including the repaired areas will be visually examined during the scheduled ASME Section XI B-N-1 visual examinations to the extent possible, with the entire Core Barrel being examined at or near the end of the Inspection Interval.

The RPV examinations will be performed to meet the intent of the requirements of Regulatory Guide 1.150 and ASME Section XI.

Reactor Vessel Closure Head

All ultrasonic examinations are performed manually. The flange to shell weld, dome circumferential weld, and the head meridional welds (6) will be examined from the O.D. surface to the extent practical due to obstruction by the CRDM penetrations. Refer to Relief Request (RR-2) for areas not examinable.

The peripheral CRDM welds and extension tube welds, are subject to surface examination (PT) to meet the requirements of Category B-O inservice inspection requirements.

The RPV Closure Head examinations will be performed to meet the intent of the requirements of Regulatory Guide 1.150 and ASME Section XI.

Steam Generators (Primary Side)

All examinations are performed manually from the O.D. surface of the components. Areas to be examined include the tube sheet to extension piece weld, extension piece meridional welds(4), extension piece to lower head weld, lower head meridional welds, nozzle to vessel welds nozzle inner radii, support skirt to vessel weld and stay cylinder welds. Primary bolting receives a visual examination. Refer to Relief Request (RR-3) for areas not examinable.

Pressurizer

All volumetric examinations are done manually from the O.D. surface. Areas include both shell to head welds and 1 foot of their respective intersecting longitudinal welds(2), nozzle to shell welds, and a visual examination of manway bolting.

Pressurizer(cont.)

Refer to Relief Request (RR-5) for areas not examinable.

Four support bracket welds and the support skirt weld receive a surface examination.

Reactor Coolant Pressure Boundary Piping

All volumetric examinations are conducted from the O.D. surface with the exception of the Reactor Vessel nozzle to extension and extension to pipe welds (as addressed under Reactor Vessel).Areas to be examined include circumferential welds, longitudinal welds, and branch connection welds.

Refer to Relief Request (RR-6) for areas of welds not examined.

Welds on piping greater than 1 inch nominal pipe size are selected for examination in accordance with Table IWB-2500-1, categories B-F and B-J as follows:

a) All terminal ends in each pipe or branch run connected to vessels

b) All terminal ends and joints in each pipe or branch run connected to other components where the stress levels exceed the following limits under loads associated with specific seismic events and operational conditions:

   1) primary plus secondary stress intensity range of $2.4S_m$ for ferritic steel and austenitic steel;

   2) cumulative usage factor U of 0.4.

c) All dissimilar metal welds between combinations of:

   1) carbon or low alloy steels to high alloy steels;

   2) carbon or low alloy steels to high nickel alloys;

   3) high alloy steels to high nickel alloys.

d) Additional piping welds so that the total number of circumferential butt welds (or branch connection or socket welds) selected for examination equals 25% of the circumferential butt welds (or branch connection or socket welds) in the reactor coolant system. This total does not include welds excluded by IWB-1220.These additional welds may be located in one loop.

Reactor coolant Pressure Boundary Piping (cont.)

One loop as defined for PWR Plants:

a) one hot leg and one cold leg in one reactor coolant piping loop;

b) one branch, representative of an essentially symmetric piping configuration among each group of branch runs that are connected to reactor coolant loops and that perform similar system functions;

c) each piping and branch run exclusive of the categories of loops and runs that are part of a) and b) above.

Reactor Coolant Pumps

As required by Regulatory Guide 1.14, the bore and keyway areas of each reactor coolant pump flywheel are examined ultrasonically once each period. Additionally, the flywheels receive a 100% volumetric examination (UT) and a surface examination near the end of each Inspection Interval.

A 100% volumetric examination (RT) is required to be performed on the casing upper and lower scroll welds, and a visual examination of the casing internal surfaces of one (1) reactor coolant pump. These examinations are the subject of Relief Request (RR-7).

The RCP studs are examined ultrasonically from the bore hole,and the nuts are visually examined (VT-1) inplace. In the event the pump is disassembled,(see Relief Request (RR-7)) the bolting and flange surface are visually examined.

Steam Generator Tubes

The Steam Generator tubing surveillance requirements are contained in the Plant Technical Specification 3/4.4.5. This specification is based on a modification of USNRC Regulatory Guide 1.83, Revision 1, as modified by St.Lucie Unit 1 Technical Specifications and contains the requirements for sampling, acceptance, plugging and reporting. Eddy current examination of steam generator tubing is conducted in accordance with Article IV of ASME Section XI.

Valve Bodies: Internal Surfaces

Class 1 valves exceeding 4 inch nominal pipe size are required to receive a visual examination (VT-3) of the internal surfaces.Refer to Relief Request (RR-8) for clarification.

2.1.3 Component Supports - Class 1

Integral attachment welds are selected and examined per the requirements of Table IWB-2500-1, Categories B-H and B-K-1. Class 1 component supports subject to examination are selected in accordance with Subarticle IWF-2510.Those supports selected receive a visual examination (VT-3) to determine their general mechanical and structural condition. An additional visual examination (VT-4) is performed on spring type supports and mechanical/hydraulic snubbers to determine conditions relating to their operability to the extent of confirming their functional adequacy, verfication of settings or freedom of motion, as applicable.

The functional testing requirements, testing method, and extent and frequency of testing for mechanical and hydraulic snubbers shall be governed by the Plant Technical Specifications.

2.1.4 System Pressure Tests - Class 1

System pressure tests are conducted on Class 1 systems and components as follows:

a) A System Leakage Test is conducted prior to plant startup following each refueling outage. The pressure retaining boundary subject to the leakage test corresponds to the reactor coolant system boundary, as established with all valves aligned as required by approved plant operating procedures for startup and normal reactor operation. The VT-2 examination boundary extends to include the second closed valve at the boundary extremity, which may be a check valve opposing Reactor Coolant system pressure. The test is conducted at system operating temperature and pressure.

b) A System Hydrostatic Test is conducted on all Class 1 piping and components within the system boundary at or near the end of the Inspection Interval. The system test boundary is determined in accordance with the requirements of paragraph IWA-5229 of the Code.

2.1.5 Instrumented Inspection Technique (IIT)

FP&L will continue to utilize the Instrumented Inspection Technique for only those portions of Class 1 systems which have been evaluated in accordance with H.A.F.A. International Topical Report: HAFA 135(P),Section IV. The IIT, where employed, is done in lieu of both the system functional test and system hydrostatic test and is employed each period,if applicable.

Reference Documents:
FP&L Letter: L-85-379, Dated Oct.4,1985(Request for approval to use Instrumented Inspection Technique)

NRC Letter,Dated Nov.8,1985 (TAC #59917)

2.1.6 Repair and Replacement - Class 1

Repair to Class 1 components,piping, and supports is done in accordance with the requirements of IWA-4000 and IWB-4000,ASME Section XI.

Replacement of Class 1 components, piping, and supports is done in accordance with the requirements of IWA-7000 and IWB-7000 of ASME Section XI.

2.2 Class 2 Systems

The Class 2 Systems Boundaries are developed based upon the requirements of Regulatory Guide 1.26 and St.Lucie Unit 1 - FSAR.

Specific examination requirements for components and systems are based upon the requirements of ASME Section XI and as modified by 10 CFR 50.55a paragraph (b)(2) (IV) and Code Case N-408. Supplemental examinations required by Standard Review Plan SRP 6.6,Section I-7, II-7,and ASB 3-1 are also incorporated where applicable.

Details of how all requirements are factored into the Class 2 Program are delineated below:

2.2.1 ASME Code Exemptions Employed

Code Case N-408: Alternative Rules for Examination of Class 2 Piping Section XI, Division 1.

The following alternative rules are used for determining components subject to examination and for establishing examination requirements for Class 2 piping under Section XI, Division 1.

a) The following components (or parts of components) of RHR,ECC,and CHR systems (or portions of systems) are exempt from the volumetric and surface examination requirements of IWC-2500:

1) vessels, piping, pumps, valves, and other components NPS 4 inch and and smaller in all systems except in high pressure safety injection systems of pressurized water reactor plants;

2) vessels, piping,pumps,valves, and other components NPS 1 1/2 inch and smaller in high pressure safety injection systems of pressurized water reactor plants;

3) component connections NPS 4 inch and smaller (including nozzles, socket fittings, and other connections) in vessels,piping, pumps, valves, and other components of any size in all systems except in high pressure safety injection systems of pressurized water reactor plants;

4) component connections NPS 1 1/2 inch and smaller (including nozzles,socket fittings, and other connections)in vessels,piping, pumps,valves,and other components of any size in high pressure safety injection systems of pressurized water reactor plants;

5) vessels, piping, pumps, valves, other components, and component connections of any size in statically pressurized, passive,(i.e. no pumps) safety injection systems[2] of pressurized water reactor plants.

6) piping and other components of any size beyond the last shutoff valve in open ended portions of systems that do not contain water during normal plant operating conditions.[3]

2.2.1 ASME Code Exemptions Employed (cont.)

b) The following components (or parts of components)other than RHR,ECC, and CHR systems (or portions of systems) are exempt from the volumetric and surface examination requirements of IWC-2500:

1) vessels, piping, pumps, valves, and other components NPS 4 inch and smaller;

2) component connections NPS 4 inch and smaller (including nozzles, socket fittings, and other connections) in vessels,piping,pumps, valves,and other components of any size;

3) vessels, piping, pumps, valves, other components, and component connections of any size in systems or portions of systems that operate (when the system function is required) at a pressure equal to or less than 275 psig and at a temperature equal to or less than 200 degrees Fahrenheit;

4) piping and other components of any size beyond the last shutoff valve in open ended portions of systems that do not contain water during normal plant operating conditions.

c) For welds in austenitic stainless steel or high alloy piping, the requirements of Table 1, Category C-F-1, Pressure Retaining Welds in Austenitic Stainless Steel or High Alloy Piping,(located in Code Case N-408) shall be used as an alternative to the requirements of Table IWC-2500-1.

d) For welds in carbon or low alloy steel piping, the requirements of Table 2, Category C-F-2, Pressure Retaining Welds in Carbon or Low Alloy Steel Piping,(located in Code Case N-408) shall be used as an alternative to the requirements of Table IWC-2500-1.

Note2: Statically pressurized, passive safety injection systems of pressurized water reactor plants are typically called by such names as accumulator tank and associated system, safety injection tank and associated system, or core flooding tank and associated system.

Note3: Normal plant operating conditions include reactor startup, operation at power, hot standby, and reactor cooldown to cold shut down conditions, but do not include test conditions.

2.2.2 Component/Piping Examination Development

Steam Generators (Secondary Side)

All required volumetric examinations are conducted manually from the O.D. surface of Steam Generators to the extent required in Table IWC -2500-1 of ASME Section XI.The examinations are distributed between the two generators. Specific referencing paragraphs are as follows;

Code Category C-A

Note 3: In the case of multiple vessels of similar design, size,and service(such as steam generators and heat exchangers) the required examinations may be limited to one vessel or distributed among the vessels.

For both generators, the steam and feedwater nozzle welds and inner radii areas are examined due to the selection criteria utilized for both the Feedwater and Main steam piping systems.

Secondary manway bolting receives a visual (VT-1) examination, in place.

Shutdown Cooling Heat Exchangers

All volumetric examinations are conducted manually from the O.D. surface of the heat exchanger. Areas examined include the two girth welds on the primary water box and the inlet and outlet nozzles on each heat exchanger.The examinations are equally distributed between the two vessels.

Main Steam and Feedwater Piping

All volumetric and surface examinations on these piping systems are performed from the O.D. surface.

Piping welds are selected for examination based upon the requirements of Code Case N-408, Table 2, Code Category C-F-2. In addition, high stress welds that exceed the criteria of Note 1a, in the 1983 Edition of ASME Section XI, Category C-F shall be examined.

IWC-2500-1, Category C-F, Note 1(a): all welds at locations where the stresses under the loadings resulting from normal and upset plant conditions, as calculated by the sum of Eqs.(9) and (10) in NC-3652, exceed $0.8(1.2S_h + S_A)$

Welds in those portions of systems addressed in SRP 6.6 paragraph I, and SRP 3.6.1, BTP ASB 3-1 are addressed as follows; Pipe to pipe welds and longitudinal seams are required to be examined, additionally, the Code Category (C-F) boundary is extended past the code class boundary (MSIV) to the first restraint providing at least two degrees of restraint to piping thermal expansion. Welds and supports are specifically identified in the Main Steam and Feedwater examination tables.

2.2.2 Component/Piping Examination Development (cont.)

Austenitic Piping Systems

All volumetric and surface examinations on these piping systems are performed from the O.D. surface. Piping welds are selected for examination based upon the requirements of Code Case N-408, Table 1, Code Category C-F-1.

2.2.3 Component Supports - Class 2

Integral attachment welds are selected and examined per the requirements of Table IWC-2500-1, Category C-C. Class 2 component supports subject to examination are selected in accordance with Subarticle IWF-2510.Those supports selected receive a visual examination (VT-3) to determine their general mechanical and structural condition. An additional visual examination (VT-4) is performed on spring type supports and mechanical/hydraulic snubbers to determine conditions relating to their operability to the extent of confirming their functional adequacy, verification of settings or freedom of motion, as applicable.

The functional testing requirements, testing method, and extent and frequency of testing for mechanical and hydraulic snubbers shall be governed by the Plant Technical Specifications.

2.2.4 System Pressure Tests - Class 2

The pressure retaining components within the Class 2 system boundaries are subjected to System Pressure Tests in accordance with IWC - 5210 and visually examined (VT-2) per IWA - 5240. The tests are conducted as follows:

a) System Functional Test, IWA - 5211 (b), - For those systems or portions of systems,not required to operate during normal reactor operation, but for which periodic system or component functional tests are performed, as required by the Plant Technical Specifications and / or the Pump and Valve (IST) program, a VT-2 examination is performed at least once each period (except in the period when a hydrostatic test is performed) during the system or component functional test. The boundary subject to pressurization during a System Functional Test includes only those pressure retaining components within the system boundary pressurized under the test mode required during the performance of the periodic system (or component) functional test. Nominal operating pressure of the system functional test is acceptable as the system test pressure.

2.2.4 System Pressure Tests - Class 2 (cont.)

b) A System Hydrostatic Test, IWA - 5211 (d) is performed on Class 2 systems at least once during each Inspection Interval. The boundary subject to test pressurization during a System Hydrostatic Test is defined as the Class 2 system boundary and includes only those portions of the system required to operate or support the safety system function up to and including the first normally closed valve(including a safety or relief valve),or valve capable of automatic closure when the safety function is required. The VT-2 examination performed during a System Hydrostatic Test is used to satisfy the system functional test requirements of a) above for the period in which it conducted.

2.2.5 Instrumented Inspection Technique (IIT)

FP&L will continue to utilize the Instrumented Inspection Technique for only those systems(or portions of systems) which have been evaluated in accordance with H.A.F.A. International Topical Report: HAFA 135(P),Section IV. The IIT, where employed, takes the place of both the system functional test and the system hydrostatic test and is employed each period, as applicable.

Reference Documents:
FP&L Letter: L-85-379, Dated Oct.4,1985(Request for approval to use Instrumented Inspection Technique)

NRC Letter,Dated Nov.8,1985 (TAC #59917)

2.2.6 Repair and Replacement - Class 2

Repair to Class 2 components,piping, and supports is done in accordance with the requirements of IWA-4000 and IWC-4000,ASME Section XI.

Replacement of Class 2 components, piping, and supports is done in accordance with the requirements of IWA-7000 and IWC-7000 of ASME Section XI.

2.3 Class 3 Systems

The Class 3 System Boundaries are developed based upon the requirements of Regulatory Guide 1.26 and ASME Section XI.

2.3.1 ASME Code Exemptions Employed

Integral attachments of supports and restraints, to components that are 4 inch NPS and smaller, within the system boundaries of Examination Categories D-A, D-B, and D-C of Table IWD-2500-1, shall be exempt from the visual examination (VT-3), except for the Auxiliary Feedwater Systems.

Integral attachments of supports and restraints, to components exceeding 4 inch NPS may be exempted provided:

a) the components are located in systems (or portions of systems) whose function is not required in support of reactor residual heat removal, containment heat removal, and emergency core cooling;

b) the components operate at a pressure of 275 psig or less and at a temperature of 200 degrees Fahrenheit(93 degrees Centigrade) or less.

2.3.2 Component Supports - Class 3

Class 3 piping and component support integral attachment welds, except those exempted by IWD-1220.1 and IWD-1220.2 are visually examined (VT-3).Other Class 3 piping and component supports are visually examined to determine their general mechanical and structural integrity. An additional visual examination (VT-4) is performed on spring type supports and mechanical/hydraulic snubbers to determine conditions relating to their operability to the extent of confirming their functional adequacy, verfication of settings or freedom of motion, as applicable. The Class 3 supports subject to examination have been selected in accordance with Subarticle IWF-2510 of ASME Section XI.

The functional testing requirements, testing method, and extent and frequency of testing for mechanical and hydraulic snubbers shall be governed by the Plant Technical Specifications.

2.3.3 System Pressure Test - Class 3

The pressure retaining components within the boundary of each system specified for Categories D-A, D-B, and D-C are pressure tested and visually examined (VT-2) for leakage during the following tests:

a) For systems required to operate during normal plant operation, a System Inservice Test, IWA-5211(c) is conducted at least once each period while the system is in operation and at operating pressure. The boundary subject to test pressurization, during a System Inservice Test, extends to those pressure retaining components under operating pressure during normal system operations;

OR

b) System Functional Test, IWA-5211(b), For those systems,or portions of systems, not required to operate during normal plant operation, a VT-2 examination is performed during a periodic system or component functional test, as required by the Plant Technical Specifications and/or the Pump and Valve (IST) Program. The boundary subject to test pressurization during a System Functional Test includes only those pressure retaining components within the system boundary pressurized under the test mode required during the performance of the periodic system (or Component) functional test. The nominal operating pressure of the system functional test is acceptable as the system test pressure.

AND

c) System Hydrostatic Test,IWA-5211(d), is performed on Class 3 systems once in each interval. The boundary subject to test pressurization extends up to and includes the first normally closed valve, or valve capable of automatic closure, as required to perform the safety-related system function. The system pressure requirements are defined in Subarticle IWD-5223 of ASME Section XI.

2.3.4 Instrumented Inspection Technique (IIT)

FP&L will continue to utilize the Instrumented Inspection Technique for only those systems(or portions of systems) which have been evaluated in accordance with H.A.F.A. International Topical Report: HAFA 135(P),Section IV. The IIT, where employed,takes the place of the system functional test and system hydrostatic test and is employed each period,if applicable.

Reference Documents:
FP&L Letter: L-85-379, Dated Oct.4,1985(Request for approval to use Instrumented Inspection Technique)

NRC Letter,Dated Nov.8,1985 (TAC #59917)

2.3.5 Repair and Replacement - Class 3

Repair to Class 3 components,piping,and supports is done in accordance with the requirements of IWA-4000 and IWD-4000 of ASME Section XI.

Replacement of Class 1 components,piping,and supports shall be in accordance with the requirements of IWA-7000 and IWD-7000 of ASME Section XI.

2.4 Flaw Indications

Class 1

Pursuant to the ASME Section XI, subarticle IWB-2420,in the case of welds where examinations reveal the presence of flaw indications that exceed the acceptance standards and the component is evaluated as acceptable for service, the areas containing the flaw indications will be scheduled for reexamination during the next three(3)inspection periods of Inspection Plan B (IWB-2410). Provided the flaw indications remain essentially the unchanged for three successive inspection periods, the component examination schededule will revert to the original schedule of successive inspections.

Class 2

Pursuant to the ASME Section XI, subarticle IWC-2420,in the case of welds where examinations reveal the presence of flaw indications that exceed the acceptance standards and the component is evaluated as acceptable for service, the areas containing the flaw indications will be scheduled for reexamination during the next inspection period of Inspection Plan B per IWC-2412. Provided the flaw indications remain essentially the unchanged for the next inspection period, the component examination schededule will revert to the original schedule of successive inspections.

2.5 Class MC Components

10 CFR 50.55a presently incorporates only those portions of Section XI that address the ISI requirements for Class 1, 2,and 3 components and their supports. The regulation does not currently address the ISI of containments. Since this proposed amendment is only intended to update current regulatory requirements to include the latest ASME Code edition and addenda, the requirements of Subsection IWE would not be imposed upon Commission licensees by this amendment.

Per the above statement,Subsection IWE of Section XI is exempted and therefore will not be addressed in this Program.

Reference: Federal Register,Vol. 53, No.123 Dated June 26,1987.

3.0 Relief Requests

During the First Ten Year Inspection Interval there were cases where component configuration and / or interferences, prohibited 100% coverage of the Code required volume or surfaces. In each case,where such limitations were encountered, the details are documented in a Relief Request. Since those same conditions will prevail during this Inservice Inspection Interval, those Relief Requests are included that will utilized in the Second ISI Interval.

In cases where parts of the required examination areas cannot be effectively be examined, because of a combination of component design or current inspection technique limitations, FP&L will continue to evaluate the development of new or improved examination techniques, with the intent of applying these techniques where a practical improvement in the examination can be achieved.

3.1 FORMAT

Relief Requests are arranged in order by Code Category, followed by those of general nature where Code Category does not apply. They are numbered sequentially. Each Relief Request contains the following information:

A) COMPONENT CLASSIFICATION: describes the Code Class, component or system description,and Code Category description (if applicable)

B) EXAMINATION/TESTING REQUIREMENTS: lists Code Category, Code Item Number,(if applicable)and describes the examination/test requirements.

C) RELIEF REQUESTED: describes specific areas in which relief is needed,(i.e. weld i.d.and description)and gives brief description for the reason why relief is being requested.

D) BASIS FOR RELIEF: describes examination(s) conducted and/or evaluated to support the reason relief is being requested.

E) ALTERNATE EXAMINATIONS: proposes alternative examinations to replace, supplement, or support the examinations/tests and evaluations required or already conducted.

F) IMPLEMENTATION SCHEDULE: proposed time frame/schedule

G) ATTACHMENTS: lists drawings,tables,etc..

3.2 Relief Request Tables

Where applicable,supportive documentation in the form of Tables and Figures specifically identify each item affected by the Relief Request and describes the limitations encountered and the extent of examination achieved during the First Ten Year ISI Interval which is expected to remain the same for the Second Ten Year ISI Interval.

3.3 List of Applicable Relief Requests

Relief Requests known to be applicable to the ISI examinations are listed below. Additional Relief Requests, as deemed necessary, will be submitted pursuant to the requirements of 10 CFR 50.55a(g)(5).

RR #	Description	Code Category	Code Item No.
RR-1	Pressure Retaining Welds in Reactor Vessel	B-A	B1.10 B1.11 B1.12
		B-A	B1.20 B1.21 B1.22
RR-2	Reactor Pressure Vessel Closure Head	B-A	B1.22 B1.40
RR-3	Pressure Retaining Welds in Vessels, other than Reactor Vessel	B-B	B2.32 B2.40
	Full Penetration Welds of Nozzles in Vessels Program B, Steam Generator	B-D	B3.130 B3.140
RR-4	Full Penetration Welds of Nozzles in Vessels Reactor Pressure Vessel	B-D B-D	B3.90 B3.100
RR-5	Full Penetration Welds of Nozzles in Vessels Program B Pressurizer	B-D B-D	B3.110 B3.120
RR-6	Pressure Retaining Welds in Piping	B-J	B9.11 B9.31
RR-7	Pressure Retaining Welds in Pump Casing/Pump Casing	B-L-1 B-L-2	B12.10 B12.20
RR-8	Valve Bodies, >4 in. NPS	B-M-2	B12.50
RR-9	Open Ended Systems	C-H	------
RR-10	IWF-5000 Test Requirements	---	-----
RR-11	Ultrasonic Calibration Blocks	APPENDIX III	
RR-12	Class 1 & 2 Welds	-----	------

ST. LUCIE NUCLEAR POWER PLANT UNIT 1
SECOND INSPECTION INTERVAL
INSERVICE INSPECTION

RELIEF REQUEST NO.: 1

A. COMPONENT CLASSIFICATION:

- Class 1
- Reactor Pressure Vessel
- Pressure Retaining Welds in Reactor Vessel

B. EXAMINATION REQUIREMENTS:

EXAM CAT.	ITEM NO.	EXAMINATION REQUIREMENTS
B-A	B1.10 B1.11 B1.12	Volumetric examination to include essentially 100% of the weld length of one beltline region weld. These examinations shall be performed during each inspection interval, and may be performed at or near the end of the inspection interval.
B-A	B1.20 B1.21 B1.22	Volumetric examination to include essentially 100% of the weld length of one accessible weld. These examinations shall be performed during each inspection interval, and may be performed at or near the end of the inspection interval for bottom head welds only.
B-A	B1.30	Volumetric examination to include essentially 100% of the weld length. This examination shall be performed during each inspection interval, and may be deferred till the end of the interval providing that at least 50% of the shell to flange weld is examined by the end of the first inspection period and the remainder examined by the end of the third period in conjunction with the nozzle examination of examination category B-D (Program B).

ST. LUCIE NUCLEAR POWER PLANT UNIT 1
SECOND INSPECTION INTERVAL
INSERVICE INSPECTION

RELIEF REQUEST NO.: 1

C. RELIEF REQUESTED:

Relief is requested from the ASME Boiler and Pressure Vessel Code required volume due to the following:

(1) Configuration and permanent attachments prohibit 100% ultrasonic examination coverage of the required examination volume.

(2) Interference from search unit wedge-to-component near surface interface noise, and

(3) Component geometric interference with scanning equipment and/or geometric shadowing of examination areas.

Relief is requested for the following welds:

WELD IDENTIFICATION	WELD DESCRIPTION
7-203	UPPER SHELL -TO- FLANGE WELD
204-02	LOWER HEAD DOLLAR PLATE
204-03A 204-03B 204-03C 204-03D 204-03E 204-03F	LOWER HEAD MERIDIONAL WELDS
10-203	LOWER SHELL -TO- LOWER HEAD WELD
9-203	MIDDLE SHELL -TO-LOWER SHELL WELD
3-203A 3-203B 3-203C	LOWER SHELL VERTICAL WELDS

D. BASIS FOR RELIEF:

1. 10 CFR 50.55a (g) (4) recognizes that throughout the service life of a nuclear power facility, components which are classified as ASME Code Class 1 shall meet the requirements, except design and access provisions requirements, set forth in Section XI, to the extent practical within the limitations of design, geometry and materials of construction of the components.

ST. LUCIE NUCLEAR POWER PLANT UNIT 1
SECOND INSPECTION INTERVAL
INSERVICE INSPECTION

RELIEF REQUEST NO.: 1

2. Configuration and permanent attachments prohibit 100% ultrasonic examination coverage of the required code volume.

3. Additional ultrasonic techniques are employed, where practical, to achieve the code required volume. Described below, by weld description, denotes the limitations encountered and those additional techniques employed to compensate for those areas where CRV could not be effectively covered.

a. RPV LOWER HEAD WELDS

The only examination coverage limitations experienced during examination of the lower head dollar plate weld, no. 204-02, were due to near surface interface noise. Those volumes shadowed by the interface noise were completely examined with the 45-degree full vee path scans. See dwg. no. 001-LIM and 001-PSLRR for location of weld.

WELD NO.	EXAM ANGLE	% OF VOLUME NOT EFFECTIVELY EXAMINED	FIGURE NO.
204-02	0 DEGREE	50.0	001-LIM
	45 DEGREE	0	N/A
	60 DEGREE	16.99	001-LIM
	* COMBINED COVERAGE	0	

*COMBINED COVERAGE INDICATES THE PERCENT OF CODE REQUIRED VOLUME NOT EFFECTIVELY COVERED BY AT LEAST ONE CALIBRATED BEAM.

TABLE NO. 1

b. LOWER HEAD MERIDIONAL WELDS

Access for examinations of the Lower Head Meridional Weld, Nos. 204-03A through F, was limited due to interference from the core support lugs and flow skirt Drawing No. 001-LIM is a rollout plan view of the scan surface limitations for the meridional welds. These areas of inaccessibility resulted in volumetric coverage limitations quantified in Table 2 of this Relief.

ST. LUCIE NUCLEAR POWER PLANT UNIT 1
SECOND INSPECTION INTERVAL
INSERVICE INSPECTION

RELIEF REQUEST NO.: 1

WELD NO.	EXAM ANGLE	% OF VOLUME NOT EFFECTIVELY EXAMINED	FIGURE NO.
204-03A	0 DEGREE	74.82	001-LIM
	45 DEGREE	63.92	
	60 DEGREE	62.24	
	45 DEGREE T	57.13	
	60 DEGREE T	49.56	
	*COMBINED COVERAGE	0	
204-03B	0 DEGREE	79.99	001-LIM
	45 DEGREE	71.34	
	60 DEGREE	70.0	
	45 DEGREE T	63.94	
	60 DEGREE T	58.36	
	*COMBINED COVERAGE		
204-03C	0 DEGREE	74.82	001-LIM
	45 DEGREE	71.75	
	60 DEGREE	62.24	
	45 DEGREE T	57.13	
	60 DEGREE T	49.56	
	*COMBINED COVERAGE	0	
204-03D	0 DEGREE	79.99	001-LIM
	45 DEGREE	71.34	
	60 DEGREE	70.0	
	45 DEGREE T	63.94	
	60 DEGREE T	58.36	
	*COMBINED COVERAGE	0	
204-03E	0 DEGREE	74.82	001-LIM
	45 DEGREE	71.75	
	60 DEGREE	62.24	
	45 DEGREE T	57.13	
	60 DEGREE T	49.56	
	*COMBINED COVERAGE	0	
204-03F	0 DEGREE	79.99	001-LIM
	45 DEGREE	71.84	
	60 DEGREE	70.0	
	45 DEGREE T	63.94	
	60 DEGREE T	58.36	
	*COMBINED COVERAGE	0	

TABLE NO. 2

ST. LUCIE NUCLEAR POWER PLANT UNIT 1
SECOND INSPECTION INTERVAL
INSERVICE INSPECTION

RELIEF REQUEST NO.: 1

c. RPV CIRCUMFERENTIAL WELDS

The mechanized examination of the Lower Shell-to-Lower Head Weld, No. 10-203, was limited due to interference from the core support lugs and anti-rotation lugs. The near surface volume was effectively examined with 45-degree full vee path scans. Drawing No. 001-LIM shows the inaccessible scan surfaces from the vessel inside surface. Table 3 lists the coverage limitations for each beam component.

WELD NO.	EXAM ANGLE	% OF VOLUME NOT EFFECTIVELY EXAMINED	FIGURE NO.
10-203	0 DEGREE	36.61	001-LIM
	45 DEGREE	17.71	
	60 DEGREE	23.46	
	45 DEGREE	2.45	
	60 DEGREE	8.73	
	*COMBINED COVERAGE	0	

TABLE NO. 3

d. MIDDLE SHELL -TO- LOWER SHELL WELD

Examination of the Middle Shell-to-Lower Shell Weld, No. 9-203, was limited due to interference from the surveillance specimens. The 70-degree and 45-degree full vee path scans effectively examined the near surface volume except in those areas where scanning was limited due to the surveillance specimens. Drawing No. 001-LIM is a rollout view showing Weld No. 9-203 and depicting areas where scans could not be performed. Drawing No. 001-SKT, figure no. 3 is a sectional view showing the 45-degree and 60-degree transverse examination limitations. Figure no. 4, same drawing shows the 70-degree transverse examination beam profiles in the area of the specimen tubes.

ST. LUCIE NUCLEAR POWER PLANT UNIT 1
SECOND INSPECTION INTERVAL
INSERVICE INSPECTION

RELIEF REQUEST NO.: 1

WELD NO.	EXAM ANGLE	% OF VOLUME NOT EFFECTIVELY EXAMINED	FIGURE NO.
9-203	0 DEGREE	15.8	001-LIM
	45 DEGREE	22.05	
	60 DEGREE	29.17	
	45 DEGREE T	.30	001-SKT
	60 DEGREE T	14.3	FIG. 3
	70 DEGREE RL	2.41	001-SKT
	70 DEGREE RLT	.21	FIG. 4
	*COMBINED COVERAGE	0	

TABLE NO. 4

e. UPPER SHELL-TO-FLANGE WELD

The Upper Shell-to-Flange Weld, No. 7-203, was examined from the shell side. The 0-degree and 60-degree examinations were limited due to near surface interface noise; however, this volume was effectively examined using the 45-degree full vee path beam. Manual examinations utilizing beams directed nearly perpendicular to the weld plane from the flange seal surface will compensate for the straight beam and angle beam examination limitations on the flange side of the weld. Due to the flange configuration, no transverse examination scans were performed from the flange side of the weld. Drawing No. 001-SKT, figure no. 7 provides a section view of the limitations to Weld No. 7-203.

WELD NO.	EXAM ANGLE	% OF VOLUME NOT EFFECTIVELY EXAMINED	FIGUR NO.
7-203.	0 DEGREE	80.83	001-SKT
	45 DEGREE	35.0	FIG. 7
	60 DEGREE	1.32	
	45 DEGREE T	58.11	
	60 DEGREE T	58.11	
	*COMBINED COVERAGE	0	

TABLE NO. 5

ST. LUCIE NUCLEAR POWER PLANT UNIT 1
SECOND INSPECTION INTERVAL
INSERVICE INSPECTION

RELIEF REQUEST NO.: 1

f. RPV LONGITUDINAL SHELL WELDS

The examinations of the Lower Shell Vertical Welds, Nos. 3-203A, B, and C, were limited very slightly due to anti-rotation lug and flow skirt interference. The near surface volume was effectively examined with the 70-degree and 45-degree full vee path scans. Drawing No. 001-PSLRR shows the location of those limitations due to the lug and flow skirt interference. The examination of weld no. 3-203B was also limited due to interference of a surveillance capsule. This volume was effectively examined by the 45-degree full vee path beam. Drawing No. 001-LIM shows the limitation due to the surveillance capsule interference.

WELD NO.	EXAM ANGLE	% OF VOLUME NOT EFFECTIVELY EXAMINED	FIGUR NO.
2-203A	0 DEGREE	38.56	001-LIM
	45 DEGREE	5.0	
	60 DEGREE	28.56	
	45 DEGREE T	0	
	60 DEGREE T	0	
	70 DEGREE RL	0	
	70 DEGREE RLT	0	
	*COMBINED COVERAGE	0	
2-203B	0 DEGREE	38.56	001-LIM
	45 DEGREE	5.0	
	60 DEGREE	28.56	
	45 DEGREE T	0	
	60 DEGREE T	0	
	70 DEGREE RL	0	
	70 DEGREE RLT	0	
	*COMBINED COVERAGE	0	
2-203C	0 DEGREE	27.77	001-LIM
	45 DEGREE	0	
	60 DEGREE	19.9	
	45 DEGREE T	0	
	60 DEGREE T	0	
	70 DEGREE RL	0	
	70 DEGREE RLT	0	
	*COMBINED COVERAGE	0	

TABLE NO. 6

ST. LUCIE NUCLEAR POWER PLANT UNIT 1
SECOND INSPECTION INTERVAL
INSERVICE INSPECTION

RELIEF REQUEST NO.: 1

4. Limitations to coverage of the ASME Code Required Examination Volumes were due to component configuration and interference by vessel attachments. These limitations are identified in figures and tables provided in this request for relief. The limitations were minimized to the maximum extent possible. In all cases where limitations were experienced, the examinations were supplemented by additional scans using alternate sound beam components to enhance overall coverage.

5. The extent of examination volume achieved ultrasonically and the alternate scans performed coupled with the system pressure tests provide assurance of an acceptable level of quality and safety.

E. ALTERNATE EXAMINATIONS:

1) Conduct Mechanized Ultrasonic Examinations to the extent practical within the limitations.

2) Perform as required supplemental beam angles to maximize the percentage of code required volume achieved.

3) Periodic System Leakage tests per Table IWB-2500-1

4) Inservice Hydrostatic test per Table IWB-2500-1

F. IMPLEMENTATION SCHEDULE:

SECOND INSERVICE INSPECTION INTERVAL

11 FEBURARY 1988 TO 11 FEBURARY 1998

G. ATTACHMENTS:

001-PSLRR ST. LUCIE RPV GENERAL ARRANGEMENT DRAWING

001-LIM RPV COMPOSITE SCAN LIMITATIONS

001-SKT ULTRASONIC SCAN LIMITATIONS

ST. LUCIE NUCLEAR POWER PLANT UNIT NO. 1
SECOND INSPECTION INTERVAL
INSERVICE INSPECTION

RELIEF REQUEST NO.: 2

A. COMPONENT CLASSIFICATION:

- CLASS 1
- REACTOR PRESSURE VESSEL - CLOSURE HEAD
- PRESSURE RETAINING WELDS IN REACTOR VESSEL
- CLOSURE HEAD TO FLANGE WELD
- MERIDIONAL WELDS

B. EXAMINATION REQUIREMENTS:

EXAM. CAT.	ITEM NO.	EXAMINATION REQUIREMENTS
B-A	B1.22	Volumetric examination to include essentially 100% of the length of one accessible weld. This examination shall be performed during each inspection interval.
B-A	B1.40	Volumetric and surface examination to include essentially 100% of the weld length. This examination shall be performed during each inspection interval.

C. RELIEF REQUESTED:

Relief is requested from the ASME Boiler and Pressure Vessel Code required volume due to the following:

1. Configuration and permanent attachments prohibit 100% Ultrasonic examination of the required volume.

2. Configuration and permanent attachments prohibit 100% surface examination of the code required surface.

ST. LUCIE NUCLEAR POWER PLANT UNIT NO. 1
SECOND INSPECTION INTERVAL
INSERVICE INSPECTION

RELIEF REQUEST NO.: 2

3. Relief is requested from the following welds:

WELD IDENTIFICATION	WELD DESCRIPTION
209-02	CLOSURE HEAD TO FLANGE WELD
209-03A	MERIDIONAL WELD
209-03B	MERIDIONAL WELD
209-03C	MERIDIONAL WELD
209-03D	MERIDIONAL WELD
209-03E	MERIDIONAL WELD
209-03F	MERIDIONAL WELD

D. BASIS FOR RELIEF:

1. 10 CFR 50.55a (g) (4) recognizes that throughout the service life of a nuclear power facility, components which are classified as ASME Class 1 shall meet the requirements, except design and access provisions requirements, set forth in section XI, to the extent practical within the limitations of design, geometry and material of construction of the component.

2. Configuration and permanent attachments prohibit 100% ultrasonic and surface examination of the code required volume and surface.

3. Described below, by weld description, donotes the limitations encountered and those additional techniques employed to compensate for those areas where CRV could not be effectively covered.

   a. MERIDIONAL WELDS

      All six (6) intersecting meridional welds between the closure head to flange weld is limited to 15 1/2 inches of weld that can be examined by the ultrasonic examination method due to the closure head insulation ring. See drawing no. 001-CH-1 for insulation ring limitations.

ST. LUCIE NUCLEAR POWER PLANT UNIT NO. 1
SECOND INSPECTION INTERVAL
INSERVICE INSPECTION

RELIEF REQUEST NO.: 2

b. CLOSURE HEAD TO FLANGE WELD

Configuration of the closure head limits the examination of the weld to a one side examination. Drawing no. 001-CH provides the limitations and the extent of code required volume that cannot be examined.

4. The extent of examination volume achieved ultrasonically and the surface area achieved and the system pressure tests provide assurance of an acceptable level of quality and safety.

E. ALTERNATE EXAMINATIONS:

1) Conduct Volumetric Ultrasonic examinations to the extent practical within the limitations.

2) Conduct the Surface examination to the extent practical within the limitations.

3) Periodic System Leakage tests per Table IWB-2500-1

4) Inservice Hydrostatic Tests per Table IWB-2500-1

F. IMPLEMENTATION SCHEDULE:

SECOND INSERVICE INSPECTION INTERVAL

11 FEBURARY 1988 TO 11 FEBURARY 1988

G. ATTACHMENTS:

001-CH RPV CLOSURE HEAD LIMITATIONS

001-CH-1 RPV CLOSURE HEAD MERIDIONAL WELD LIMITATIONS

ST. LUCIE NUCLEAR POWER PLANT UNIT NO. 5
SECOND INSPECTION INTERVAL
INSERVICE INSPECTION

RELIEF REQUEST NO.: 3

Relief is requested for the following welds:

COMPONENT IDENTIFICATION	WELD DESCRIPTION
S/G-A	TUBESHEET TO HEAD WELD
	OUTLET AND INLET NOZZLE TO VESSEL WELDS
	OUTLET AND INLET NOZZLE INNER RADIUS SECTION
	MERIDIONAL HEAD WELDS
S/G-B	TUBESHEET TO HEAD WELD
	OUTLET AND INLET NOZZLE TO VESSEL WELD
	OUTLET AND INLET NOZZLE INNER RADIUS SECTION
	MERIDIONAL HEAD WELDS

D. BASIS FOR RELIEF:

1. 10 CFR 50.55 a (g) (4) recognizes that throughout the service life of a nuclear power facility, components which are classified as ASME Code Class 1 shall meet the requirements, except design and access provisions requirements, set forth in Section XI, to the extent practical within the limitations of design, geometry and materials of construction of the components.

2. Configuration and permanent attachments prohibit 100% ultrasonic examination coverage of the required code volume.

3. Additional ultrasonic techniques are employed, where practical, to achieve the code required volume. Described below, by weld description, denotes the limitations encountered and those additional techniques employed to compensate for those areas where CRV could not be effectively covered.

ST. LUCIE NUCLEAR POWER PLANT UNIT NO. 5
SECOND INSPECTION INTERVAL
INSERVICE INSPECTION

RELIEF REQUEST NO.: 3

a. TUBE SHEET TO HEAD WELD

The TUBESHEET TO HEAD WELD is obstructed from code required volume for the following reasons:

1. Primary manways obstruct a 30 inch area, located approximately 14" from the center line of the tube sheet weld on the head side. The primary manways are located at the 0 and 90 degree location. See drawing no. 001-SG for illustration of limitations.

2. Four 1 inch lines located at approximately the 31", 49", 39' and 40 foot location, clockwise from datum 0. An area, 7 inches from the weld edge and 2 inches cannot be examined. See drawing no. 001-SG for illustration of limitations.

3. An area 4 foot 5 inches, located 14 inches from the weld edge is obstructed due to the Hot leg Nozzle. See drawing no. 001-SG for illustration of scan limitations.

b. NOZZLE TO SHELL AND INNER RADIUS SECTION

Scan limitations are defined as follows:

1. An area 23 inches long by 14" in width is limited by the primary manways. See drawing no. 001-SG-1.

2. An area 15 inches, long by 12 foot in width is limited by the steam generator stay base for the cold legs and an area 18 inches long on the hot leg. See drawing no. 001-SG-1 for limitations.

ST. LUCIE NUCLEAR POWER PLANT UNIT NO. 1
SECOND INSPECTION INTERVAL
INSERVICE INSPECTION

RELIEF REQUEST NO.: 3

A. COMPONENT CLASSIFICATION:

- Class 1
- Pressure Retaining Welds in Vessels other than Reactor Vessel
- Full Penetration Welds of Nozzles in Vessels - Program B
- Steam Generators Primary Side

B. EXAMINATION REQUIREMENTS:

EXAM CAT.	ITEM NO.	EXAMINATION REQUIREMENTS
B-B	B2.40 B2.32	Volumetric examination to include essentially 100% of the weld length of one vessel amoung a group of vessels performing a similar function. This examinations shall be performed during each inspection interval.
B-D	B3.130 B3.140	Volumetric examination to include essentially 100% of the weld length. These examinations shall be performed during each inspection interval.

C. RELIEF REQUESTED:

Relief is requested from the ASME Boiler and Pressure Vessel Code required volume due to the following:

(1) Configuration and permanent attachments prohibit 100% ultrasonic examination coverage of the required examination volume.

ST. LUCIE NUCLEAR POWER PLANT UNIT NO. 1
SECOND INSPECTION INTERVAL
INSERVICE INSPECTION

RELIEF REQUEST NO.: 3

c. MERIDIONAL HEAD WELDS

The five (5) meridional head welds are obstructed by the primary manways and the nozzles. See drawing no. 001-SG-2 for limitations. The welds affected are as follows:

WELD NO.	LOCATION
111-A	LOCATED AT 66 DEGREES
111-B	LOCATED AT 138 DEGREES
111-C	LOCATED AT 210 DEGREES
111-D	LOCATED AT 282 DEGREES
111-E	LOCATED AT 354 DEGREES

4. Limitations to coverage of the ASME Code Required Examination Volumes were due to component configuration and interference by vessel attachments. These limitations are identified in figures and tables provided in this request for relief. The limitations were minimized to the maximum extent possible. In all cases where limitations were experienced, the examinations were supplemented by additional scans using alternate sound beam components to enhance overall coverage.

5. The extent of examination volume achieved ultrasonically and the alternate scans performed coupled with the system pressure tests provide assurance of an acceptable level of quality and safety.

ST. LUCIE NUCLEAR POWER PLANT UNIT NO. 1
SECOND INSPECTION INTERVAL
INSERVICE INSPECTION

RELIEF REQUEST NO.: 3

E. ALTERNATE EXAMINATIONS:

1) Conduct VOLUMETRIC Ultrasonic Examinations to the extent practical within the limitations.

2) Perform as required supplemental beam angles to maximize the percentage of code required volume achieved.

3) Periodic System Leakage tests per Table IWB-2500-1

4) Inservice Hydrostatic test per Table IWB-2500-1

F. IMPLEMENTATION SCHEDULE:

SECOND INSERVICE INSPECTION INTERVAL

11 FEBURARY 1988 TO 11 FEBURARY 1998

G. ATTACHMENTS:

001-SG	STEAM GENERATOR TUBE SHEET TO SHELL LIMITATIONS
001-SG-1	STEAM GENERATOR NOZZLE SCAN LIMITATIONS
001-SG-2	STEAM GENERATOR MERIDIONAL WELD LIMITATIONS

ST. LUCIE NUCLEAR POWER PLANT UNIT 1
SECOND INSPECTION INTERVAL
INSERVICE INSPECTION

RELIEF REQUEST NO.: 4

A. COMPONENT CLASSIFICATION:

- Class 1
- Reactor Pressure Vessel
- Full Penetration Welds of Nozzles in Vessels
- Nozzle to Vessel Welds
- Nozzle Inside Radius Section

B. EXAMINATION REQUIREMENTS:

EXAM CAT.	ITEM NO.	EXAMINATION REQUIREMENTS
B-D	B3.90	Volumetric examination to include all nozzles with full penetration welds to vessel shell. These examinations shall be performed during each inspection interval, and may be performed at or near the end of the inspection interval.
B-D	B3.100	Volumetric examination to include all nozzle inner radius sections. These examinations shall be performed during each inspection interval, and may be performed at or near the end of the inspection interval.

C. RELIEF REQUESTED:

Relief is requested from the ASME Boiler and Pressure Vessel Code required volume due to the following:

(1) Configuration of nozzle integral extension prohibit 100% ultrasonic examination coverage of the required examination volume.

(2) Interference from search unit wedge-to-component near surface interface noise.

ST. LUCIE NUCLEAR POWER PLANT UNIT 1
SECOND INSPECTION INTERVAL
INSERVICE INSPECTION

RELIEF REQUEST NO.: 4

Relief is requested for the following welds:

WELD IDENTIFICATION	WELD DESCRIPTION
205-05	OUTLET NOZZLE
205-10	OUTLET NOZZLE
205-01A	INLET NOZZLE
205-01B	INLET NOZZLE
205-09A	INLET NOZZLE
205-09B	INLET NOZZLE

D. BASIS FOR RELIEF:

1. 10 CFR 50.55a (g) (4) recognizes that throughout the service life of a nuclear power facility, components which are classified as ASME Code Class 1 shall meet the requirements, except design and access provisions requirements, set forth in Section XI, to the extent practical within the limitations of design, geometry and materials of construction of the components.

2. Configuration and design of the nozzles prohibit 100% ultrasonic examination coverage of the required code volume.

3. Additional ultrasonic techniques are employed, where practical, to achieve the code required volume. Described below, by weld description, denotes the limitations encountered and those additional techniques employed to compensate for those areas where CRV could not be effectively covered.

ST. LUCIE NUCLEAR POWER PLANT UNIT 1
SECOND INSPECTION INTERVAL
INSERVICE INSPECTION

RELIEF REQUEST NO.: 4

a. NOZZLE -TO- SHELL WELD

The inlet and outlet Nozzle-to-Shell Welds were examined from the vessel shell and from the nozzle bore. The nozzle bore examinations were limited due to near surface interface noise; however, surface wave examinations were performed on nozzle inner radius sections and shear wave beams directed from the shell supplemented nozzle bore inside surface coverage. The shell side transverse examinations of the outlet nozzles were limited due to interference from the nozzle integral extensions. Transverse scans from the nozzle bore on the integral extensions supplemented coverage of this volume. Limitations to the inlet nozzle examinations and limitations to the outlet nozzle examinations are shown on drawing 001-PSLNOZ.

INLET NOZZLE

WELD NO.	EXAM ANGLE	% OF VOLUME NOT EFFECTIVELY EXAMINED	FIGUR NO.
INLET NOZZLE	0 DEGREE	20.0	001-PSLNOZ
(SHELL SIDE)	45 DEGREE	20.0	
	60 DEGREE	1.0	
	45 DEGREE T	0	N/A
	60 DEGREE T	0	N/A
(FROM BORE)	15 DEGREE	2.2	001-PSLNOZ
	45 DEGREE	1.6	

TABLE NO. 1

OUTLET NOZZLE

WELD NO.	EXAM ANGLE	% OF VOLUME NOT EFFECTIVELY EXAMINED	FIGUR NO.
OUTLET NOZZLE	0 DEGREE	80.0	001-PSLNOZ
(SHELL SIDE)	45 DEGREE	46.1	
	60 DEGREE	28.3	
	45 DEGREE T	72.0	
	60 DEGREE T	72.0	
(FROM BORE)	15 DEGREE	1.5	
	45 DEGREE	1.5	

TABLE NO. 2

ST. LUCIE NUCLEAR POWER PLANT UNIT 1
SECOND INSPECTION INTERVAL
INSERVICE INSPECTION

RELIEF REQUEST NO.: 4

4. Limitations to coverage of the ASME Code Required Examination Volumes were due to component configuration and near surface interface noise. These limitations are identified in figures and tables provided in this request for relief. The limitations were minimized to the maximum extent possible. In all cases where limitations were experienced, the examinations were supplemented by additional scans using alternate sound beam components to enhance overall coverage.

5. The extent of examination volume achieved ultrasonically and the alternate scans performed coupled with the system pressure tests provide assurance of an acceptable level of quality and safety.

E. ALTERNATE EXAMINATIONS:

1) Conduct Mechanized Ultrasonic Examinations to the extent practical within the limitations.

2) Perform as required supplemental beam angles to maximize the percentage of code required volume achieved.

3) periodic System Leakage tests per Table IWB-2500-1

4) Inservice Hydrostatic test per Table IWB-2500-1

F. IMPLEMENTATION SCHEDULE:

SECOND INSERVICE INSPECTION INTERVAL

11 FEBURARY 1988 TO 11 FEBURARY 1998

G. ATTACHMENTS:

001-PSLNOZ INLET AND OUTLET NOZZLE LIMITATIONS

ST. LUCIE NUCLEAR POWER PLANT UNIT NO. 1
SECOND INSPECTION INTERVAL
INSERVICE INSPECTION

RELIEF REQUEST NO.: 5

A. COMPONENT CLASSIFICATION:

- Class 1
- Full Penetration Welds of Nozzles in Vessels - Program B
- Pressurizer (Top and Bottom head)

B. EXAMINATION REQUIREMENTS:

EXAM CAT.	ITEM NO.	EXAMINATION REQUIREMENTS
B-D	B3.110 B3.120	Volumetric examination to include essentially 100% of the weld length. These examinations shall be performed during each inspection interval.

C. RELIEF REQUESTED:

Relief is requested from the ASME Boiler and Pressure Vessel Code required volume due to the following:

(1) Configuration and permanent attachments prohibit 100% ultrasonic examination coverage of the required examination volume.

ST. LUCIE NUCLEAR POWER PLANT UNIT NO. 1
SECOND INSPECTION INTERVAL
INSERVICE INSPECTION

RELIEF REQUEST NO.: 5

Relief is requested for the following welds:

COMPONENT IDENTIFICATION	WELD DESCRIPTION
SV-A	SAFETY NOZZLE LOCATED AT 180 DEGREES
RV	RELIEF NOZZLE LOCATED AT 225 DEGREE
SV-B	SAFETY NOZZLE LOCATED AT 270 DEGREES
SV-C	SAFETY NOZZLE LOCATED AT 305 DEGREES
SP	SPRAY NOZZLE CENTER OF HEAD
SURGE	SURGE NOZZLE CENTER BOTTOM HEAD

D. BASIS FOR RELIEF:

1. 10 CFR 50.55 a (g) (4) recognizes that throughout the service life of a nuclear power facility, components which are classified as ASME Code Class 1 shall meet the requirements, except design and access provisions requirements, set forth in Section XI, to the extent practical within the limitations of design, geometry and materials of construction of the components.

2. Configuration and permanent attachments prohibit 100% ultrasonic examination coverage of the required code volume.

3. Additional ultrasonic techniques are employed, where practical, to achieve the code required volume. Described below, by weld description, denotes the limitations encountered and those additional techniques employed to compensate for those areas where CRV could not be effectively covered.

ST. LUCIE NUCLEAR POWER PLANT UNIT NO. 1
SECOND INSPECTION INTERVAL
INSERVICE INSPECTION

RELIEF REQUEST NO.: 5

a. PRESSURIZER TOP HEAD NOZZLE WELDS

The NOZZLE TO SHELL WELDS are obstructed from code required volume for the following reasons:

1. The required scan path for each of the nozzles is approximately 12" for the 0 and 60 degree angle. Because of the close proximity of the nozzle arangements to each other the 12 inches scan path cannot be achieved. See drawing no. 001-PRZ for obstructions.

b. PRESSURIZER BOTTOM HEAD NOZZLE WELDS

1. Ten Pressurizer Heater Penetrations on the Bottom head limit the scan distance for the 60 degree angle only. See drawing 001-PRZ-1 for scan limitations.

4. Limitations to coverage of the ASME Code Required Examination Volumes were due to component configuration and interference by vessel attachments. These limitations are identified in figures and tables provided in this request for relief. The limitations were minimized to the maximum extent possible. In all cases where limitations were experienced, the examinations were supplemented by additional scans using alternate sound beam components to enhance overall coverage.

5. The extent of examination volume achieved ultrasonically and the alternate scans performed coupled with the system pressure tests provide assurance of an acceptable level of quality and safety.

ST. LUCIE NUCLEAR POWER PLANT UNIT NO. 1
SECOND INSPECTION INTERVAL
INSERVICE INSPECTION

RELIEF REQUEST NO.: 5

E. ALTERNATE EXAMINATIONS:

1) Conduct VOLUMETRIC Ultrasonic Examinations to the extent practical within the limitations.

2) Perform as required supplemental beam angles to maximize the percentage of code required volume achieved.

3) periodic System Leakage tests per Table IWB-2500-1

4) Inservice Hydrostatic test per Table IWB-2500-1

F. IMPLEMENTATION SCHEDULE:

SECOND INSERVICE INSPECTION INTERVAL

11 FEBURARY 1988 TO 11 FEBURARY 1998

G. ATTACHMENTS:

001-PRZ PRESSURIZER NOZZLE LIMITATIONS TOP OF PRZ

001-PRZ-1 PRESSURIZER BOTTOM HEAD LIMITATIONS

ST. LUCIE NUCLEAR POWER PLANT UNIT 1
SECOND INSPECTION INTERVAL
INSERVICE INSPECTION

RELIEF REQUEST NO.: 6

A. COMPONENT CLASSIFICATION:

- CLASS 1
- CODE CATEGORY B-J
- PRESSURE RETAINING WELDS IN PIPING
- NOMINAL PIPE SIZE EQUAL TO OR GREATER THAN 4 INCHES
- NOZZLE TO PIPE TRANSITION WELDS

B. EXAMINATION REQUIREMENTS:

CODE CATEGORY	EXAMINATION REQUIREMENTS
B9.11 B9.31	The examinations performed during each inspection interval shall cover the circumference of 100% of the weld. Piping welds require volumetric and surface examination methods. The area subject to examination is identified in IWB-2500-8, See figure no. 001-PIPEBJ for examination requirements.

C. RELIEF REQUESTED:

Relief is requested from the ASME Code required surface area utilizing the surface examination method.

D. BASIS FOR RELIEF:

1. Performance of these examinations on the Reactor Pressure Nozzle to pipe transition weld involves excessive costs, manhours and man/rem with little or no compensating increase in the level of quality and safety.

2. Section XI has reduced the volumetric portion of the examination volume to the inner one-third of the wall thickness (see figure no. 001-PIPEBJ), and still requires the surface examination of the outside surface (see figure no. 001-PIPEBJ). In most cases, this is the most efficient and less expensive way of examining these welds. In the case of the Main Reactor Coolant piping this is not the case due to the size of the piping, location of the welds (access), manrem exposure due to the close proximity of the RPV, the cost of insulation removal, erecting scafolding , not to mention the increased time of the examiner to conduct the surface examinations.

ST. LUCIE NUCLEAR POWER PLANT UNIT 1
SECOND INSPECTION INTERVAL
INSERVICE INSPECTION

RELIEF REQUEST NO.: 6

3. Florida Power and Light Company feels that the extent of examinations conducted and the volume achieved along with the proposed ultrasonic examination in lieu of the surface exam will provide assurance of an acceptable level of Quality and Safety.

E. ALTERNATIVE EXAMINATIONS AND TESTS

1. Conduct volumetric examinations from the inside surface of the Reactor Pressure Vessel during the Mechanized RPV ultrasonic examinations of the nozzles, exam category B-D, and the remainder of the Nozzles welds at or near the end of the inspection interval in conjunction with the RPV mechanized examinations.

2. Conduct a full volumetric ultrasonic examination technique to effectively examine the outside surfaces of the Reactor Vessel Nozzle Pipe to Transition welds, (OUTLET and INLET) from the I.D. surface (Figure No. 001-PSLNOZ) in lieu of the surface examinations as defined in the proposed attachment to this relief request.

3. Conduct system pressure tests as required by the St. Lucie Inservice Pressure Test Program.

4. The extent of examination required and the proposed exam coupled with the system pressure tests provide assurance of an acceptable level of quality and safety.

F. IMPLEMENTATION SCHEDULE:

- SECOND INSERVICE INSPECTION INTERVAL

  11 FEBURARY 1988 TO 11 FEBURARY 1998

- The outlet nozzle pipe to transition welds to be examined by the end of the First period, in conjunction with the category B-D examinations.

- The inlet nozzle pipe to transition welds to be examined with the mechanized examinations at or near the end of the inspection interval.

ST. LUCIE NUCLEAR POWER PLANT UNIT 1
SECOND INSPECTION INTERVAL
INSERVICE INSPECTION

RELIEF REQUEST NO.: 6

G. ATTACHMENTS:

001-PIPEBJ	CODE REQUIRED EXAMINATION VOLUME AND SURFACE EXAM REQUIREMENTS
001-PSLNOZ	TYPICAL WELD CONFIGURATION (PSL)
ATTACHMENT	ALTERNATE VOLUMETRIC EXAMINATION

ST. LUCIE NUCLEAR POWER PLANT UNIT 1
SECOND INSPECTION INTERVAL
INSERVICE INSPECTION

RELIEF REQUEST NO.: 6

ST. LUCIE NUCLEAR POWER PLANT
ATTACHMENT

FOR

ALTERNATE VOLUMETRIC EXAMINATION

OF THE ST. LUCIE PLANT UNIT NO. 1 and 2

OUTLET AND INLET PIPING WELDS

TO BE USED IN LIEU OF

THE SURFACE EXAMINATION REQUIREMENTS

ST. LUCIE NUCLEAR POWER PLANT UNIT 1
SECOND INSPECTION INTERVAL
INSERVICE INSPECTION

RELIEF REQUEST NO.: 6

BACKGROUND

TO PERFORM ULTRASONIC WELD EXAMINATIONS, THE ULTRASONIC SEARCH UNIT IS APPLIED TO THE PIPE BASE METAL ADJACENT TO THE WELD. ANGULATION WEDGES CAUSE THE ULTRASONIC BEAM TO REFRACT AT THE PIPE SURFACE AND PROPAGATE INTO THE WELD AT A PREDETERMINED ANGLE. AS THE ULTRASONIC BEAM PASSES THROUGH THE PIPE WALL AND THE VOLUME OF THE WELD METAL, THE ULTRASONIC INSTRUMENT DISPLAYS ECHOS FROM THE REFLECTING SURFACES. THE DEGREE OF SUCESS DEPENDS ON THE EXAMINATION MATERIAL, THE STRENGTH OF THE ULTRASONIC BEAM, AND BEAM ANGLE WITH RESPECT TO THE ORIENTATION OF THE REFLECTING SURFACE.

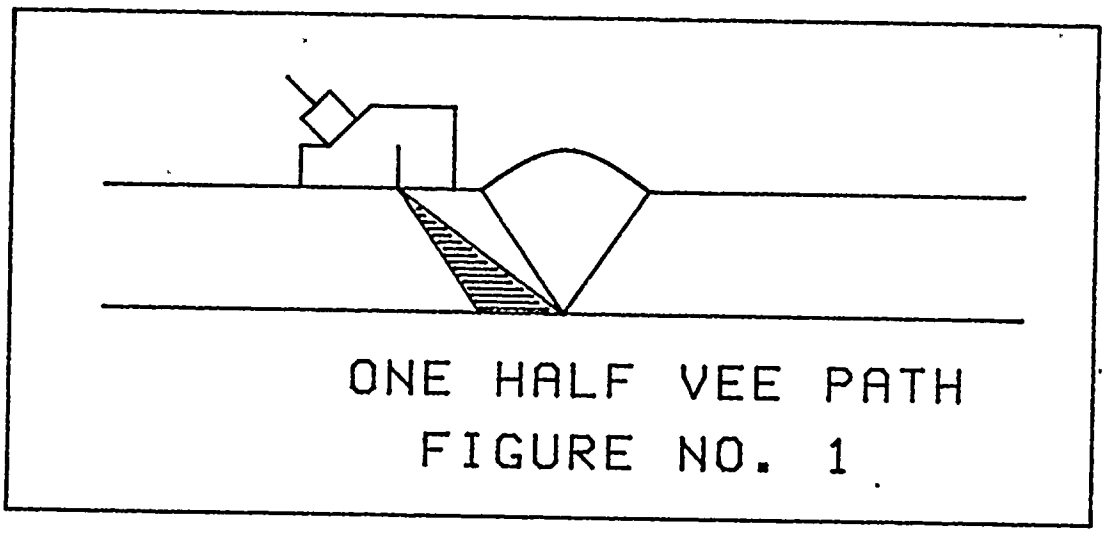

ONE HALF VEE PATH
FIGURE NO. 1

ST. LUCIE NUCLEAR POWER PLANT UNIT 1
SECOND INSPECTION INTERVAL
INSERVICE INSPECTION

RELIEF REQUEST NO.: 6

WHEN FULL VOLUME EXAMINATIONS ARE REQUIRED, THE ULTRASONIC BEAM IS MONITORED DURING THE ENTIRE BEAM PATH, i.e. ENTRY TO INSIDE SURFACE INPINGEMENT. CONDITIONS PERMITTING, THE BEAM IS FURTHER MONITORED AFTER IT REFLECTS AT THE INSIDE SURFACE AND CONTINUES TO PROPAGATE IN A VEE PATH TOWARD THE OUTSIDE SURFACE.

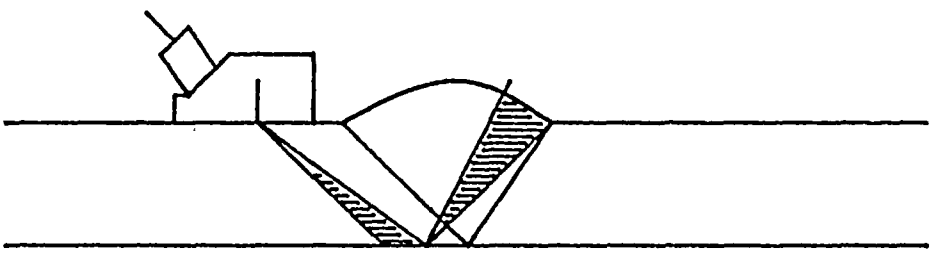

FULL VEE PATH
FIGURE NO. 2

ST. LUCIE NUCLEAR POWER PLANT UNIT 1
SECOND INSPECTION INTERVAL
INSERVICE INSPECTION

RELIEF REQUEST NO.: 6

DURING PROPAGATION THE ULTRASONIC BEAM EXHIBITS THREE MAIN CHARACTERISTICS; DIVERGENCE, ATTENUATION, AND SCATTERING. THE ESTABLISHMENT OF A DISTANCE AMPLITUDE-CORRECTION DURING CALIBRATION WILL GENERALLY COMPENSATE FOR THESE BEAM CHARACTERISTICS, TO A DEGREE. A FOURTH, RECENTLY RECOGNIZED CHARACTERISTIC IS THE FACT THAT ENTRY SURFACE "NOISE" CAUSES A "BLIND ZONE" IMMEDIATELY UNDER THE ULTRASONIC SEARCH UNIT. THIS BLIND ZONE CONTAINS A MULTITUDE OF ENTRY SURFACE SIGNALS FROM; THE ANGULATION WEDGE, THE COUPLING MATERIAL, SURFACE IRREGULARITIES, AND FROM THE EXAMINATION MATERIAL GRAIN STRUCTURE. DEPENDING ON THE EXAMINATION PARAMETERS, THIS BLIND ZONE CAN REPRESENT FROM A FEW MILS TO AS MUCH AS AN INCH OF THE ULTRASONIC BEAM PATH WHERE FLAWS COULD EXIST UN-NOTICED.

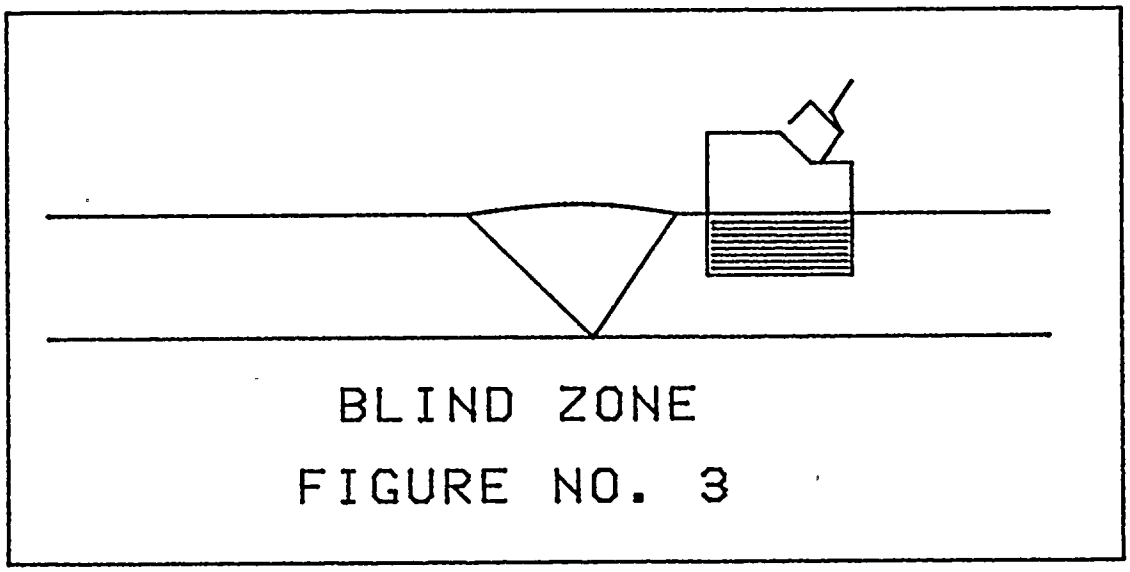

BLIND ZONE

FIGURE NO. 3

ST. LUCIE NUCLEAR POWER PLANT UNIT 1
SECOND INSPECTION INTERVAL
INSERVICE INSPECTION

RELIEF REQUEST NO.: 6

THERE ARE TWO WAYS TO ENHANCE THE EXAMINATION OF THE ENTRY SURFACE. THE MOST COMMONLY EMPLOYED TECHNIQUE IS TO EXTEND THE ULTRASONIC CALIBRATION TO A FULL VEE PATH OR BEYOUND. THIS ALLOWS THE OBSERVATION OF THE OUTSIDE SURFACE IN A RELATIVELY NOISE-FREE SEGEMENT OF THE ULTRASONIC BEAM. (FIGURE NO. 2)

SECOND, THE SIMPLEST AND LEAST EXPENSIVE APPROACH, WOULD BE TO EXAMINE THE OUTSIDE (ENTRY) SURFACE WITH ANOTHER NDE METHOD. THUS, WE RELY ON THE ULTRASONIC METHOD ONLY FOR THAT PORTION OF THE EXAMINATION VOLUME WHERE IT HAS PROVEN RELIABILITY. THIS IS THE ESSENCE OF THE ASME SECTION XI EXAMINATION REQUIREMENTS. EVEN THOUGH THE ULTRASONIC PORTION OF THE EXAMINATION VOLUME HAS BEEN REDUCED TO THE INNER ONE-THRID OF THE WALL THICKNESS, FIGURE NO. 4 THE SURFACE EXAMINATION OF THE OUTSIDE SURFACE IS STILL MANDATED. FIGURE NO. 5

FOR MOST PIPING WELDS THIS APPROACH IS THE SIMPLEST AND LEAST EXPENSIVE, BUT THIS IS NOT SO WHEN APPLIED TO THE REACTOR VESSEL NOZZLE -TO- PIPE WELDS. BECAUSE OF THEIR LOCATION, THESE WELDS POSE UNUSUAL PROBLEMS.

ST. LUCIE NOZZLE TO PIPE TRANSITION WELD PROBLEMS

1. SCAFFOLDING IS NOT POSSIBLE, OR OF LIMITED VALUE
2. MAN-REM EXPOSURE IS HIGH (5 MAN-REM)
3. THE REMOVAL OF THE INSULATION IS VERY COSTLY

ST. LUCIE NUCLEAR POWER PLANT UNIT 1
SECOND INSPECTION INTERVAL
INSERVICE INSPECTION

RELIEF REQUEST NO.: 6

FPL PROPOSES THE USE OF STATE-OF-THE-ART ULTRASONIC EXAMINATION TECHNIQUES TO EFFECTIVELY EXAMINE THE OUTSIDE SURFACE OF THE REACTOR VESSEL NOZZLE-TO-PIPE TRANSITION WELDS. THIS EXAMINATION WILL ACCOMPLISH MORE THAN THE CURRENT SURFACE EXAMINATION BEING PERFORMED AT ST. LUCIE. THE ULTRASONIC EXAMINATION WILL INVESTIGATE THE OUTSIDE SURFACE OF THE WELDS IN TWO DIRECTIONS CIRCUMFERENTIALLY AND IN TWO DIRECTIONS AXIALLY COVERING 100% OF THE WELDS PLUS ONE INCH ON EACH SIDE.

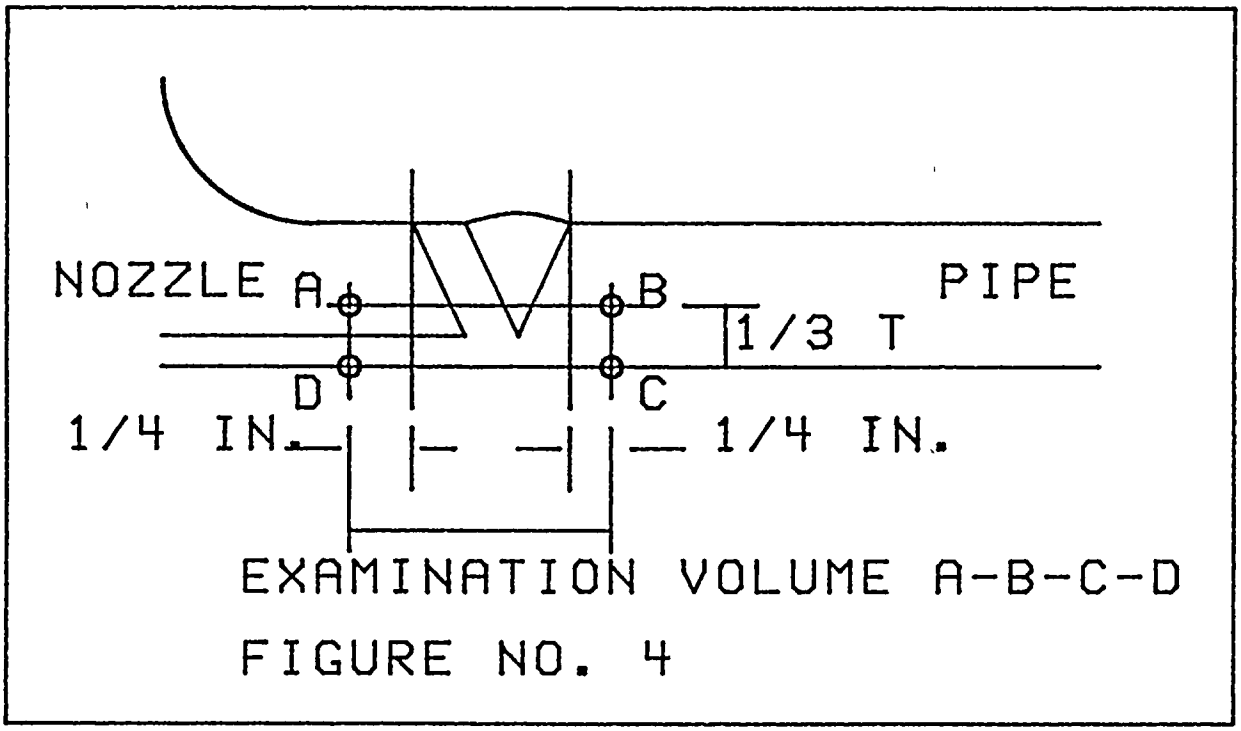

EXAMINATION VOLUME A-B-C-D

FIGURE NO. 4

ST. LUCIE NUCLEAR POWER PLANT UNIT 1
SECOND INSPECTION INTERVAL
INSERVICE INSPECTION

RELIEF REQUEST NO.: 6

A HIGH RESOLUTION 45 DEGREE SHEAR WAVE ULTRASONIC EXAMINATION WILL BE PERFORMED ON THE WELDS WITH THE EXAMINATION SENSITIVITY ESTABLISHED USING 2% T DEEP NOTCHES.

ULTRASONIC EXAMINATION

THIS EXAMINATION WILL BE PERFORMED TO DETECT UNACCEPTABLE OUTSIDE SURFACE FLAWS THAT WOULD HAVE BEEN DETECTED USING SURFACE EXAMINATION TECHNIQUES ON THE OUTSIDE SURFACE. THIS APPROACH WILL ALLOW EXAMINATION OF THE ENTIRE CIRCUMFERENCE OF THE WELD WHILE ALSO SAVING A SIGNIFICANT AMOUNT OF RADIATION EXPOSURE BY ALLEVIATING THE NEED FOR MANUAL EXAMINATION OF THE OUTSIDE SURFACE.

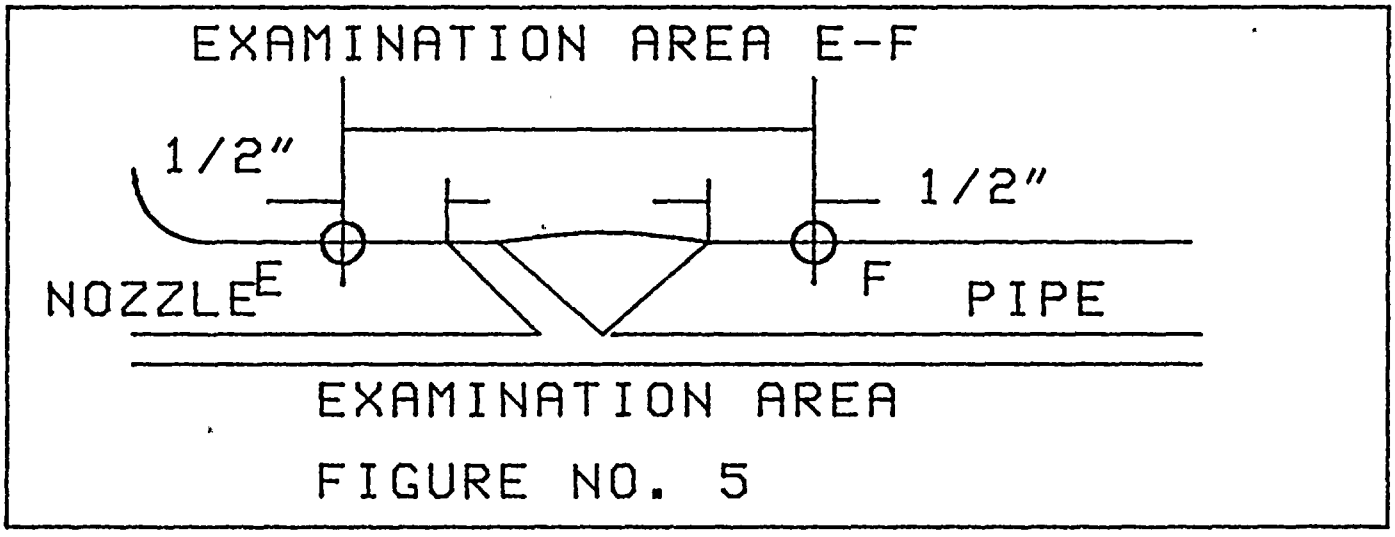

FIGURE NO. 5

ST. LUCIE NUCLEAR POWER PLANT UNIT 1
SECOND INSPECTION INTERVAL
INSERVICE INSPECTION

RELIEF REQUEST NO.: 6

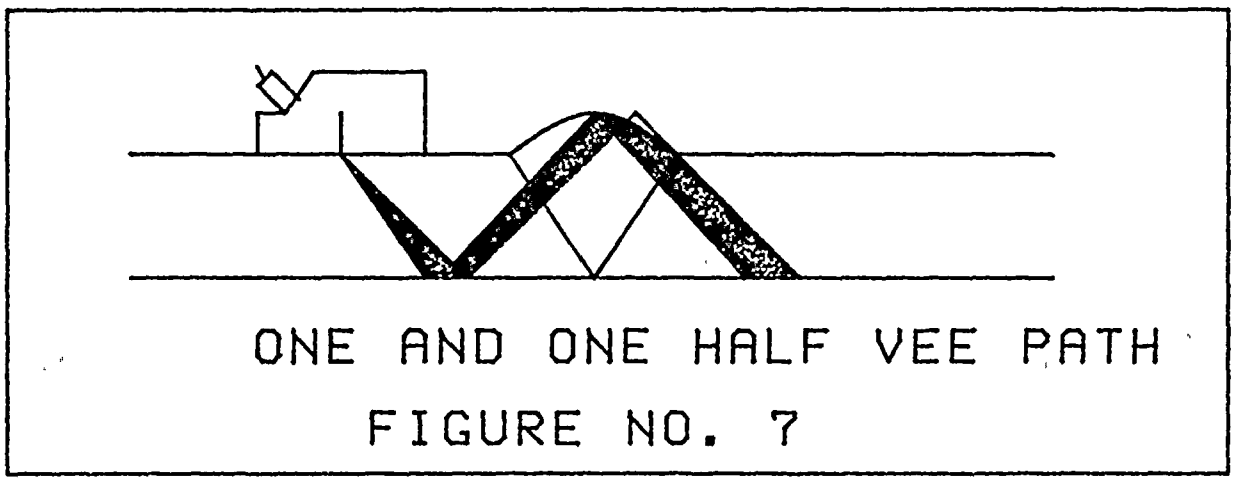

ONE AND ONE HALF VEE PATH

FIGURE NO. 7

ST. LUCIE NUCLEAR POWER PLANT UNIT 1
SECOND INSPECTION INTERVAL
INSERVICE INSPECTION

RELIEF REQUEST No. 7

A. COMPONENT CLASSIFICATION:

- Class 1
- Manufacturer - Byron Jackson
- Type pump - DFSS
- Size - 35 x 35 x 43
- Component - REACTOR COOLANT PUMP

B. EXAMINATION REQUIREMENTS:

EXAM CAT.	ITEM NO.	EXAMINATION REQUIREMENTS
B-L-1	B12.10	Volumetric examination, to include 100% of pressure retaining welds, of one pump in each group of pumps performing similar functions in a system. The examinations shall be performed during each inspection interval, and maybe performed at or near the end of the inspection interval.
B-L-2	B12.20	Visual examination of the internal pressure boundary surface on one pump in each of the group of pumps performing similar functions in the system during each inspection interval. The examinations maybe performed at or near the end of the inspection interval.

RELIEF REQUESTED:

Relief is requested from the ASME Code required examinations for the following:

1. 100% volumetric examination of the reactor coolant pump casing welds.

AND

2. 100% visual examination of the reactor coolant pump interior pressure boundary surface.

ST. LUCIE NUCLEAR POWER PLANT UNIT 1
SECOND INSPECTION INTERVAL
INSERVICE INSPECTION

RELIEF REQUEST No. 7

3. Relief is requested for the following components:

PUMP IDENTIFICATION	SERIAL NUMBER	R.C. NUMBERS
1A1	681-N-0445	34356
1A2	681-N-0446	34981
1B1	681-N-0447	34982
1B2	681-N-0448	34983

D. BASIS FOR RELIEF:

GENERAL

St. Lucie Nuclear Power Plants, Unit No. 1, has reactor coolant pumps which were manufactured prior to the initial issuance of the ASME Boiler and Pressure Vessel Code, Section XI and the design did not provide for the disassembly and removal of fixed internals. The pumps were designed to provide reliable service for the plant lifetime without internal maintenance or inspection. The impracticality of performing these examinations is not unique to St. Lucie, and has initiated generic studies to evaluate the need for inspection and to develop specific examination techniques.
To date, no technique has been qualified and proven practical for performing inservice inspection's of the Type E pump design.

DISASSEMBLY & REASSEMBLY

The disassembly and reassembly of the pumps is extremely difficult given the interference and/or tight fits which need to be addressed. Without painstaking care, the disassembly / reassembly process could degrade the pump internals from an operational standpoint.

There is a very low probability, based upon experience, to disassemble pump(s) soley for maintenance purposes. There is no requirement by the pump manufacturer (Byron Jackson) to disassemble the pump(s) as part of normal maintenance or inspection. Accordingly, Florida Power & Light Company's procedures do not require disassembly of the pump(s) for maintenance or inspection purposes. There is no reported failures within the pump casings with these model pump(s). Operating experience with these pumps to date has validated the designer's intent to provide for service free of major disassembly.

ST. LUCIE NUCLEAR POWER PLANT UNIT 1
SECOND INSPECTION INTERVAL
INSERVICE INSPECTION

RELIEF REQUEST No. 7

EXAMINATIONS

RADIOGRAPHIC CONVENTIONAL

The presence of the diffuser vanes (Fig. No. 1) precludes conventional radiography, in that the vanes prevent placement of the RT film cassettes inside the pump (as does the radiation field in terms of the radiographic film and personnel radiation exposure).

Placement of the film on the outside of the pump is feasible, but there is no radiographic source suitable for placement inside the pump. Standard isotopic radiation sources are too weak to penetrate the thick casting and background radiation from the inside surface of the pump would diminish sensitivity.

Special strong isotopic sources would be impractical to handle and position inside the pump without special designed handling equipment and not to mention personnel radiological exposure from the radiographic source itself.

MINIATURE LINEAR ACCELERATOR (MINAC)

The Miniature Linear Accelerator was considered, but the Type E pump design precludes positioning of the accelerator inside the pump.

Double wall radiography utilizing the MINAC has also been considered with some hope of attaining meaningful radiographs of a portion of the casing welds. This technique has not been qualified to date and appears to be some time off, if at all possible.

To perform this examination, large expenditures of manhours and man-rem are required. Based on actual data compiled from the radiographic examination of the Turkey Point Unit No. 3 reactor coolant pumps casing welds and the visual examination of the internal pressure boundary surface on one pump, in excess of 5900 manhours and 46 man-rem exposure was expended in the disassembly, examinations and reassembly of the pump. This data does not include engineering time or pre-outage job planning, nor does it include radiation protection personnel that required direct coverage and the posponement of work activities in other areas of the containment building due to the amounts of radiation being produced during the conduct of the radiography exposures of the casing welds.

ST. LUCIE NUCLEAR POWER PLANT UNIT 1
SECOND INSPECTION INTERVAL
INSERVICE INSPECTION

RELIEF REQUEST No. 7

ULTRASONIC EXAMINATION

Ultrasonic examination is not feasible due to the material construction of the pump casing. The pump casing is fabricated from cast stainless steel (ASTM A351, Grade CF8M). The material is essentially a cast-type 316 stainless steel. The coarse grain structure inherent in thick stainless steel castings preclude the use of conventional ultrasonic examinations. Future developments in ultrasonic examination techniques may provide a method to examine thick stainless steel castings.
When and if a major breakthrough in ultrasonic examination techniques is made that satisfies the examination requirements of the ASME code Florida Power & Light will comply with the intent of the code

LIQUID PENETRANT METHOD

Florida power & light Company has considered using the liquid penetrant method of examination as a alternate to the volumetric examination referenced in the code, but rejected this method based on the following:

Because of the porus condition of the casting surface of the weld zones, considerable surface smoothing will be required in order to enable meaningful examination and interpretation of the results.

Such weld surface finishing operations, if not performed prior to the preservice inspection, will be extremely difficult at the time of the inservice inspection.

To further complicate the surface smoothing process, St. Lucie's pumps have been operational since 1976, and at that time the insulation used on these pumps was abestos. The surface preparation would require personnel to conduct this process in a closed area with respirators, and be directly monitored by health physics personnel to control the spreading of contaimination to other areas within the containment building.

The reccommended method of penetrant is the water-washable type, using this method would require a sufficient water supply, a method of containing the water and disposing of the run offs after removal of the penetrant

ST. LUCIE NUCLEAR POWER PLANT UNIT 1
SECOND INSPECTION INTERVAL
INSERVICE INSPECTION

RELIEF REQUEST No. 7

The solvent-removable type penetrant method was rejected due to the size of the pump and the surface roughness would entrap the penetrant thereby enable meaningful examination and interpretation of the results. Using this method would also require excessive manhours and man-rem.

CODE REQUIREMENTS

The examination requirements for pumps (Figure IWB-2500, ASME Code, Section XI) were originally developed for Type F, radially split, axisymmetric casing designs. St. Lucie Plant has Type E pump designs (Fig. No.2) which have geometric configurations that make examination's of the casing welds not practical or meaningful to perform under the current code requirements.

Florida Power & Light Company feels that adequate safety margins are adherent in the basic design. The structural integrity afforded by the existing pump casing material will not significantly degrade over its lifetime. Pump casings are generally overdesigned (because of added wall thickness) to provide stability under operating load. Operating stresses in the pump casings, are well below the levels associated with vessels, therefore with lower operating stresses, fatigue life is significantly improved.

Florida Power and Light Company feels that the satisfactory inspection results achieved on our Turkey Point Plant in 1982, coupled with the same results conducted by (3) other utility company's will provide the additional assurance as to the pump's casing integrity.

E. ALTERNATE EXAMINATIONS:

As a alternate to the examination,s required by the code, Florida Power & Light Company proposes the following:

1. A 100% visual examination of the pump interior to the extent practical (recoginizing the interference by the vanes) (Fig. No. 1) should the pump be disassembled for maintenance.

2. A 100% Radiographic examination of the pump casing welds to the extent practical (recognizing the interference by the vanes) should the pump be disassembled for maintenance.

ST. LUCIE NUCLEAR POWER PLANT UNIT 1
SECOND INSPECTION INTERVAL
INSERVICE INSPECTION

RELIEF REQUEST No. 7

3. The reactor coolant pump shall be hydrostatically tested per the requirements of the ASME Boiler & Pressure Vesssel Code.

4. A 100% visual examination of the external surfaces only, of one (1) pump, and one (1) weld at or near the end of the inspection interval.

The alternate examinations and tests provide assurance of an acceptable level of quality and safety.

F. IMPLEMENTATION SCHEDULE

At or near the end of the inservice inspection interval.

Interval dates: 11 Feburary 1988 to 11 Feburary 1998

G. ATTACHMENTS TO RELIEF REQUEST NO. 7

FIGURE NO. 1 HORIZONTAL CROSS SECTION OF PUMP

FIGURE NO. 2 VERTICAL CROSS SECTION OF PUMP

FIGURE NO. 3 PUMP WELD LOCATION

ST. LUCIE NUCLEAR POWER PLANT UNIT NO. 1
SECOND INSPECTION INTERVAL
INSERVICE INSPECTION

RELIEF REQUEST NO.: 8

A. COMPONENT CLASSIFICATION:

- CLASS 1
- CODE EXAMINATION CATEGORY B-M-2
- VALVE BODY, EXCEEDING 4 IN. NOMINAL PIPE SIZE

B. EXAMINATION REQUIREMENTS:

- B12.50 Perform VT-3 visual examination of the internal surface of one valve within each group of valves that are of the same constructional design.(such as globe, gate or check valve) and manufacturing method, and perform similar functions in the system (such as containment isolation and system overpressure protection).

C. RELIEF REQUESTED:

Relief is requested from the disassembly of these valves for the sole purpose of performing a visual examination.

SIZE	SYSTEM	VALVE ID	TYPE
6"	RC	V-1200	SAFETY
6"	RC	V-1201	SAFETY
6"	RC	V-1202	SAFETY
6"	SI	HCV-3615	GLOBE
6"	SI	HCV-3625	GLOBE
6"	SI	HCV-3635	GLOBE
6"	SI	HCV-3645	GLOBE
6"	SI	V-3114	CHECK
6"	SI	V-3124	CHECK
6"	SI	V-3134	CHECK
6"	SI	V-3144	CHECK
12"	SI	V-3217	CHECK
12"	SI	V-3227	CHECK
12"	SI	V-3237	CHECK
12"	SI	V-3247	CHECK
10"	SI	V-3480	GATE
10"	SI	V-3481	GATE
10"	SI	V-3651	GATE
10"	SI	V-3652	GATE
12"	SI	V-3614	GATE
12"	SI	V-3624	GATE
12"	SI	V-3634	GATE
12"	SI	V-3644	GATE

ST. LUCIE NUCLEAR POWER PLANT UNIT NO. 1
SECOND INSPECTION INTERVAL
INSERVICE INSPECTION

RELIEF REQUEST NO.: 8

D. BASIS FOR RELIEF:

Disassembly of these valves for the sole purpose of performing a visual (VT-3) examination is not practical. The process of disassembling these components will result in considerable exposure of personnel to radiation and significantly increase the risk of component damage or failure without providing a compensating increase in the level of quality and safety.

E. ALTERNATE EXAMINATIONS:

1) Conduct a visual (VT-3) examination in accordance with the requirements of table IWB-2500-1, category B-M-2 in the event the components are disassembled for maintenance or repair.

2) Periodic inservice testing per subarticle IWV-3400 and or IWV-3520 (valves) or

3) Periodic system leakage tests per category B-P, table IWB-2500-1

4) The alternative tests and examinations provide an assurance of acceptable quality and safety.

F. IMPLEMENTATION SCHEDULE:

SECOND INSERVICE INSPECTION INTERVAL

11 FEBURARY 1988 TO 11 FEBURARY 1988

G. ATTACHMENTS:

None

ST. LUCIE NUCLEAR POWER PLANT UNIT NO. 1
SECOND INSPECTION INTERVAL
INSERVICE INSPECTION

RELIEF REQUEST NO.: 9

A. COMPONENT CLASSIFICATION:

- CLASS 2
- CONTAINMENT SPRAY SYSTEM
- PRESSURE RETAINING WELDS IN PIPING, 1/2" OR LESS

B. EXAMINATION REQUIREMENTS:

EXAM CAT.	ITEM NO.	EXAMINATION REQUIREMENTS
C-F	C5.10 C5.11	Perform a surface examination of 100% of each circumferential weld requiring examination.
	C5.12	Perform a surface examination of 2.5 t at intersecting circum - ferential weld.

C. RELIEF REQUESTED:

Relief is requested from the surface examination requirements for the following lines.

I-6-CS-16	I-10-CS-12	I-12-CS-18
I-6-CS-17	I-10-CS-13	I-12-CS-19
I-6-CS-20		
I-6-CS-21		
I-6-CS-22		
I-6-CS-23		
I-6-CS-24		
I-6-CS-25		
I-6-CS-28		
I-6-CS-29		

Drawing 001-CS, attached provides a P&ID of those lines that are 1) Affected, 2) exempt and 3) those lines to be examined.

ST. LUCIE NUCLEAR POWER PLANT UNIT NO. 1
SECOND INSPECTION INTERVAL
INSERVICE INSPECTION

RELIEF REQUEST NO.: 9

D. BASIS FOR RELIEF:

1) The containment Spray System piping is not required to operate during normal operation

2) Following initial inspection and testing, the Containment Spray piping downstream of the second isolation valve outside containment is subjected to no pressure transients and no temperature transients other than ambient containment building/auxiliary building pressure and temperature, thus, there is no mechanism for failure

3) ASME Section XI, Table IWC-2500-1, Examination Category C-H, Note 1, exempts open ended portions of systems from the Visual (VT-2) examination.

E. ALTERNATE EXAMINATIONS:

1) At least once every five (5) years, the piping is tested by performing an air or smoke flow test through each spray header to demonstrate an open flow path. (reference ASME Section XI, IWC-5222(d).

2) In the event that the containment spray system is operated or in the case of a significant seismic event, FP&L will evaluate this Relief Request to determine if additional nondestructive examinations are warranted.

3) The alternative tests and examinations provide an assurance of acceptable quality and safety.

F. IMPLEMENTATION SCHEDULE:

SECOND INSERVICE INSPECTION INTERVAL

11 FEBURARY 1988 TO 11 FEBURARY 1988

G. ATTACHMENTS:

001-CS CONTAINMENT SPRAY PIPING DRAWING

ST. LUCIE NUCLEAR POWER PLANT UNIT NO. 1
SECOND INSPECTION INTERVAL
INSERVICE INSPECTION

RELIEF REQUEST NO.: 10

A. COMPONENT CLASSIFICATION:

- CLASS 1, 2 AND 3
- ASME SECTION XI, 1983 EDITION THROUGH SUMMER 1983 ADDENDA
- IWF-5000 INSERVICE TEST REQUIREMENTS
- MECHANICAL AND HYDRAULIC SHOCK ARRESTORS (SNUBBERS)

B. TESTING REQUIREMENTS:

- IWF-5400(c) - Snubbers that fail the inservice test requirements of IWF-5400 shall be repaired in accordance with IWF-4000 and retested. An additional sample of 10% of the total number of snubbers shall be tested at that time. Additional sample testing shall be continued until all units within the sample have met the requirements of (b) above.

C. RELIEF REQUESTED:

Relief is requested from the additional sample of 10% of the total number of nonexempt (IWF-1230) snubbers.

D. BASIS FOR RELIEF:

1. The Code requirements to test an additional 10% of the total snubber population in the event of a failure does not take into account the difference in the operating characteristics of different types of snubbers and their relative susceptibility to various service-induced failure mechanisms.

2. There are substantial differences, based on manufacture and design, specifically in functional operation and dynamic response of the load of snubbers. A snubber of one design may tend toward failure under a given set of conditions while a snubber of a different design may be essentially unaffected by the same condition.

3. In addition to item 2 above, conditions which lead to the failure of a susceptible snubber may sometimes be demonstrated to be consistent with conditions unique to the system in which it is installed.

RELIEF REQUEST NO.: 10

4. Failure evaluation may indicate that snubbers of a certain type have a tendency to fail when exposed to a certain combination of temperature and vibration. When this evaluation clearly establishes that this failure exists only in a certain system, then it becomes evident that the additional sample should be taken from the susceptible population. Snubbers of the same type in other systems, that are exposed to different operating conditions, should be adequately addressed in the original test sample.

5. The NRC Standard Technical Specification for Combustion Engineering requires testing of the additional 10% of the snubber population to be conducted on the same type of snuber as the snubber that failed.

6. Florida Power and Light Company feels that the additional sampling as required by IWF-5400(c) does not adequately provide for a realistic level of confidence for locating and correcting conditions as described above.

7. Florida Power and Light Company feels that these alternative sampling methods described below are consistent with the NRC position as evidenced by the Combustion Engineering Standard Technical Specification.

E. ALTERNATE EXAMINATIONS:

1) Conduct a visual (VT-3) examination of all snubbers during each refueling outage.

2) During the scheduled functional test, if a snubber failure is identified, an additional 10% sample of the same type of snubber as that which failed will be tested as required by plant technical specifications.

3) An engineering evaluation shall be made of each failure to meet the functional test acceptance criteria to determine the cause of the failure. The results of this evaluation shall be used, if applicable, in selecting snubbers to be tested in an effort to determine the operability of other snubbers irrespective of type which may be subject to the same failure mode.

RELIEF REQUEST NO.: 10

4) Should the results of the evaluation indicate that failure was caused be either manufacturer or design deficiency, further action shall be taken, if needed, based on manufacturer or engineering recommendations.

5) The alternative examinations and tests provide assurance of an acceptable level of quality and safety.

F. IMPLEMENTATION SCHEDULE:

SECOND INSERVICE INSPECTION INTERVAL

11 FEBURARY 1988 TO 11 FEBURARY 1988

G. ATTACHMENTS:

None

ST. LUCIE NUCLEAR POWER PLANT UNIT NO. 1
SECOND INSPECTION INTERVAL
INSERVICE INSPECTION

RELIEF REQUEST NO.: 11

A. COMPONENT CLASSIFICATION:

- CLASS 1 and CLASS 2
- CODE EXAMINATION CATEGORY N/A
- ULTRASONIC CALIBRATION BLOCKS
- ASME SECTION XI, APPENDIX III

B. EXAMINATION REQUIREMENTS:

- III-3400 The basic calibration blocks shall be made from the same nominal diameter and nominal wall thickness or pipe schedule as the pipe to be examined.
- III-3411 The calibration block shall be fabricated from one of the materials specified for the piping being joined by the weld.

C. RELIEF REQUESTED:

Relief is requested from the ASME Code, Appendix III, requirements, III-3400 AND III-3411 which requires 1) the calibration block to be the same nominal diameter and wall thickness or pipe schedule and 2) be fabricated from one of the same materials as the piping being joined. Relief is requested for the following:

CAL. BLOCK I.D. NUMBER	COMPONENT DESCRIPTION	DEVIATION FROM CODE
UT-4A	PRIMARY COOLANT PIPING HOT LEG	THE BLOCK IS NOT CURVED DIFFERENT MATERIAL
UT-6	PRIMARY COOLANT PIPING COLD LEGS	THE BLOCK IS NOT CURVED
UT-45	MAIN STEAM PIPING WELDS	DIFFERENT DIAMETERS DIFFERENT THICKNESS
UT-4	REACTOR PRESSURE VESSEL	THE 3/4t HOLE IS TOO CLOSE FOR THE STRAIGHT BEAM(0 deg.) EXAM
UT-5	REACTOR PRESSURE VESSEL	THE HOLES ARE DRILLED WITHIN 3/4" OF THE END OF THE BLOCK.

ST. LUCIE NUCLEAR POWER PLANT UNIT NO. 1
SECOND INSPECTION INTERVAL
INSERVICE INSPECTION

RELIEF REQUEST NO.: 11

D. BASIS FOR RELIEF:

1. UT-4A PRIMARY COOLANT PIPING, HOT LEG

FP&L has determined that SA-533 Grade A is comparable to SA-516 Grade 70 (piping material), as provided by ASME Section XI, Appendix III, Article III-3411 (c).

Article 5 of the ASME Section V allows flat blocks for items greater than 20 inch diameter, as does Article 4 of ASME Section V.

2. UT-6 PRIMARY COOLANT PIPING, COLD LEG

The block material is identical to the coolant piping material, therefore it is preferred over a curved block of different material.

Article 5 of the ASME Section V allows flat blocks for items greater than 20 inch diameter, as does Article 4 of ASME Section V.

With a half vee examination technique, curvature is not a major source of error. Sound path calibration is used with full scale plots of indications.

3. UT-45 MAIN STEAM PIPING WELDS

The subject piping welds sre of two sizes:

a) 34" diameter, 1.250 " wall

b) 36.625" diameter, 1.234" wall. The requirements of ASME cod are such that two blocks, one of each diameter would be required.

c) The wall thickness is essentially the same, therefore there is little or no change in the sensitivity.

d) The small difference in diameter is not ultrasonically noticable.

ST. LUCIE NUCLEAR POWER PLANT UNIT NO. 1
SECOND INSPECTION INTERVAL
INSERVICE INSPECTION

RELIEF REQUEST NO.: 11

4. UT-4 AND UT-5 REACTOR PRESSURE VESSEL

The closeness of the 3/4 t hole to the end of the block, satisfies the requirements of the code to which they were fabricated.

The condition noted does not interfere with the calibration performed on these blocks.

5. The proposed calibration blocks have been in use since the plant was built, their continued use would tend to provide consistent results.

E. ALTERNATE EXAMINATIONS:

1) Perform the Code required examinations using the proposed calibration blocks as defined above.

2) Periodic system leakage tests per category B-P, and C-H tables IWB-2500-1 and IWC-2500-1.

3) The alternative tests and examinations provide an assurance of acceptable quality and safety.

F. IMPLEMENTATION SCHEDULE:

SECOND INSERVICE INSPECTION INTERVAL

11 FEBURARY 1988 TO 11 FEBURARY 1988

G. ATTACHMENTS:

None

ST. LUCIE NUCLEAR POWER PLANT UNIT NO. 1
SECOND INSPECTION INTERVAL
INSERVICE INSPECTION

RELIEF REQUEST NO.: 12

A. COMPONENT CLASSIFICATION:

- CLASS 1 WELDS
- CLASS 2 WELDS
- SECTION XI 1983 EDITION THRU SUMMER 1983 ADDENDA
- TABLES; IWB-2500-1
- TABLES; IWC-2500-1

B. EXAMINATION REQUIREMENTS:

- CLASS 1 Examination volumes and surfaces shall be performed in accordance with the applicable figures as referenced in Tables IWB-2500-1.
- CLASS 2 Examination volumes and surfaces shall be performed in accordance with the applicable figures as referenced in Tables IWC-2500-1.

C. RELIEF REQUESTED:

Relief is requested from the ASME Code, Section XI, Division 1, code required volume and surface examination requirements for Class 1 welds IWB-2500 or Class 2 welds IWC-2500 that cannot be examined.

D. BASIS FOR RELIEF:

1. 10 CFR 50.55a (g) (4) recognizes that throughout the service life of a nuclear power facility, components which are classified as ASME Code Class 1 shall meet the requirements, except design and access provisions requirements, set forth in Section XI, to the extent practical within the limitations of design, geometry and materials of construction of the components.

2. St. Lucie Nuclear Plant, Unit No. 1, Operating License was issued on March 1, 1976, and the initial Inservice Inspection Program was prepared to meet the ASME Code 1970 Edition through the Winter 1970 addenda, which only addressed class 1 components. Interference by another component or part geometry which reduces the examination coverage was not taken into consideration for the remainder of the components class 2 and class 3.

ST. LUCIE NUCLEAR POWER PLANT UNIT NO. 1
SECOND INSPECTION INTERVAL
INSERVICE INSPECTION

RELIEF REQUEST NO.: 12

3. Interferences are common throughout the industry for older constructed plants. Even with added examinations to compensate for these interferences small parts of an examination volume or surface area still cannot be fully examined as required by later Editions and Addenda of the code.

4. Section XI, does not address or even recognize relief from any of the code requirements, therefore only the Nuclear Regulatory Commission through 10 CFR 50 can approve reliefs from any of the code requirements.

5. The NRC representatives at the ASME committee meetings expressed concern as to the amount of Utility requests for relief that they were recieving and the lack of manpower to review and approve these request in an expiedient manner.

6. A proposed ASME Code Case is currently being discussed within the ASME Code committees that would reduce the examination coverage by a certain percentage and still be acceptable for compliance with the code requirements. To date this Code case has not been issued.

7. In order to provide some relief in these areas, FP&L proposes the following alternative action that will not only provide ease to FP&L and the NRC, but still maintain the required documentation necessary for enforcement and review of Inservice Inspection obstructions to assure that the Quality and safety level has not been reduced beyound the minimum standards.

E. ALTERNATE EXAMINATIONS:

1) FP&L proposes that up to a 20% reduction in examination coverage on any given Class 1 or 2 weld may be accepted provided:

ST. LUCIE NUCLEAR POWER PLANT UNIT NO. 1
SECOND INSPECTION INTERVAL
INSERVICE INSPECTION

RELIEF REQUEST NO.: 12

a) The reduction in coverage is due to access or configuration conditions;

b) The reduction in coverage is required to be for discrete volumes or areas. A general reduction in coverage for the complete length of a weld is not acceptable.

c) The length of any discrete volume or area of missed coverage shall not exceed 8 inches along the weld length or 20% of the total weld length, whichever is less.

d) For ultrasonic examination, if multiple angles (e.g. 0 deg., 45 deg., and 60 deg.) or scan directions (e.g. parallel to the weld and perpendicular to the weld) are required, and the examination cannot be performed using all the required angles and scan directions, then the examination volumes that missed coverage by any required angle or scan direction shall be included in the total volume of missed coverage.

e) For volumetric or surface examination, the 20% reduction limit applies to the sum of all discrete volumes or areas of missed coverage for each weld.

f) When the reduction in coverage is less than 20%, the coverage of greater than 80% is assumed to be essentially 100%, and acceptable by the code.

2) When the reduction in coverage is equal to or greater than 20%, A relief request shall be filed with the Regulatory Authority pursuant to the requirements of 10 CFR 50.55 a.

3) When the reduction in coverage is less than 20%, the reduction in coverage shall be fully documented in a format consistent with the format for a relief and included within the applicable Inservice Inspection Program in accordance with IWA-6000.

RELIEF REQUEST NO.: 12

4) On a periodical bases all documented reductions in coverage shall be submitted to the Regulatory Authority as part of the Program update submittal.

5) Periodic system leakage tests per category B-P, and C-H tables IWB-2500-1 and IWC-2500-1.

6) The alternative tests and examinations provide an assurance of acceptable quality and safety and assure the that all reductions in coverage are documented and included in existing programs as required by ASME Code.

F. IMPLEMENTATION SCHEDULE:

SECOND INSERVICE INSPECTION INTERVAL

11 FEBURARY 1988 TO 11 FEBURARY 1988

G. ATTACHMENTS:

None

4.0 EVALUATION CRITERIA

4.1 Acceptance Standards - Class 1

Class 1 examination acceptance standards are in accordance with the requirements of ASME Section XI 1983 Edition, through and including the Summer of 1983 Addenda:

Examination Category	Components and Part Examined	Acceptance Standard
B-A	Welds in Reactor Vessels	IWB-3510
B-B	Welds in Other Vessels	IWB-3511
B-D	Vessel Nozzle Welds	IWB-3512
B-E	Partial Penetration Welds in Vessels	IWA-5250
B-F	Dissimilar Metal Welds	IWB-3514
B-G-1	Bolting > 2" in Diameter	IWB-3515
B-G-2	Bolting < or = to 2" Diameter	*
B-H	Integral Attachments for Vessels	IWB-3516
B-J	Welds in Piping	IWB-3514
B-K-1	Integral Attachments for Piping Pumps, and Valves	IWB-3516
B-L-1, B-M-1	Welds in Pump casings & Valve Bodies	IWB-3518
B-L-2, B-M-2	Pump Casings & Valve Bodies	*
B-N-1, B-N-2 B-N-3	Interior Surfaces & Internal Components of Reactor Vessels	*
B-O	Control Rod Drive Housing Welds	IWB-3523
B-P	All Pressure Retaining Components	IWA-5250
B-Q	Steam Generator Tubing	IWB-3521

* ASME Section XI Acceptance Standards are in the course of preparation,use Mfg. Code & Applicable Standards.

4.2 Acceptance Standards - Class 2

Class 2 examination acceptance standards are in accordance with the requirements of ASME Section XI 1983 Edition, through and including the Summer of 1983 Addenda. Article IWC-3000, Acceptance Standards for Flaw Indications, are in course of preparation.The rules of IWB-3000 may be used.

Examination Category	Components and Part Examined	Acceptance Standard
C-A	Welds in Pressure Vessels	IWB-3511
C-B	Vessel Nozzle Welds	IWB-3512
C-C	Integral Attachments for Vessels Piping, Pumps, and & Valves	IWB-3516
C-D	Bolting > than 2"	IWB-3515
C-F	Welds in Piping	IWB-3514
C-G	Welds in Pumps and Valves	IWB-3518
C-H	All Pressure Retaining Components	IWA-5250

4.3 Acceptance Standards - Class 3

Class 3 examination acceptance standards are in accordance with the requirements of ASME Section XI 1983 Edition, through and including the Summer of 1983 Addenda. Article IWD-3000, Acceptance Standards for Flaw Indications, are in course of preparation.The rules of IWB-3000 may be used.

Examination Category	Components and Part Examined	Acceptance Standard
D-A	Integral Attachment Welds on Systems in Support of Reactor Shutdown Function	IWB-3516
	Pressure Retaining Components	IWA-5250
D-B	Integral Attachment Welds on Systems in Support of ECC,CHR Atmosphere Cleanup,and RHR	IWB-3516
	Pressure Retaining Components	IWA-5250
D-C	Integral Attachment Welds on Systems in Support of Residual Heat Removal from Spent Fuel Storage Pool	IWB-3516
	Pressure Retaining Components	IWA-5250

4.4 Acceptance Standard for Supports - Class 1,2,& 3

The acceptance standards for the examination of Class 1, 2, and 3 supports are in accordance with the requirements of ASME Section XI, 1983 Edition,through and including the Summer 1983 Addenda as follows:

4.4.1 Acceptance Standards IWF-3400 - Component Support Structural Integrity

(a) Component support conditions which are unacceptable for continued service shall include the following;

1) deformations or structural degradations of fasteners, springs clamps,or other support items;

2) missing, detached, or loosened support items;

3) arc strikes, weld spatter, paint, scoring, roughness, or general corrosion on close tolerance machined or sliding surfaces;

4) fluid loss beyond specified limits or lack of fluid indication, (hydraulic snubbers only);

5) improper hot or cold positions,(snubbers and spring supports).

(b) Except as defined in a) above, the following are examples of nonrelevant conditions:

1) fabrication marks (e.g.,from punching,layout,bending,rolling and machining);

2) chipped or discolored paint;

3) weld spatter on other than close tolerance machined or sliding surfaces;

4) scratches or surface abrasion marks;

5) roughness or general corrosion which does not reduce the load bearing capacity of the support;

6) general conditions acceptable by material,Design,and/or Construction Specifications.

(c) Component supports whose examinations reveal conditions as defined in a) above, shall be unacceptable for continued service until they have been repaired, replaced, or evaluated as meeting the acceptance standards found in 4.4.2 of this Summary.

4.4.2 Acceptance

IWF-3122.1 Acceptance by Examination, Component supports whose examinations do not reveal conditions described in IWF-3400(a) shall be acceptable for continued service. Verified changes of indications from prior examination shall be recorded in accordance with IWA-6220

IWF-3122.2 Acceptance by Repair, Component supports whose examination reveal conditions described in IWF-3400(a) shall be unacceptable for continued service until such conditions are repaired and re-examined in accordance with IWF-3123.

IWF-3122.3 Acceptance by Replacement, As an alternative to the requirement of IWF-3122.2, a component support or portion of a component support which is unacceptable for continued service may be replaced in accordance with IWA-7000.

IWF-3122.4 Acceptance by Evaluation or Test,As an alternative to the requirements of IWF-3122.2, a Component support or portion of a component support which is unacceptable for continued service may be analyzed and/or tested to the extent necessary to substantiate it's integrity for it's intended service. Records and reports shall meet the requirements of IWA-6000.

4.4.3 The Inservice testing of hydraulic and mechanical snubbers is performed in accordance with Section XI requirements as augmented by the St.Lucie Unit 1 Technical Specifications which contain the testing and acceptance criteria.

5.0 SUBMITTAL SUMMARY

5.1 Description of ISI Plan Format

The Second Ten Year Inservice Inspection Plan Tables are being prepared for the components and piping systems which are subject to examination per the requirements of ASME Section XI.The examination Tables have been designed to provide the information necessary to effectively implement the examination program.

For the purpose of efficiency and control the inspection plan has been divided into smaller areas of interest called zones. Each zone is developed from an isometric drawing of a specific component,system, or portion of a component or system which identifies all the welds and any other examination areas for that zone.The inspection plan tables that are generated from these isometrics (in conjuction with the isometrics) contain the information necessary for qualified examiners to perform the required examinations.The following is a description of the format used in the tables:

A. Table Header
The table header contains, but is not limited to:
a) Plant name and unit no.
b) Plan revision no.
c) Code Class
d) Component or system description
e) Zone no.

B. Summary Number
Each examination area(i.e.,weld,valve,support) is assigned an item number for administrative use only.

C. REF. DWG. NO.
Lists isometric drawing for the zone

D. Examination area identification
Lists unique identification number,description of examination area, calibration block, and location within the plant.

E. ASME Section XI Item number

F. ASME Section XI Code Category

G. NDE Method(to be used)

H. Plan Status
Lists scheduling information for when each item is scheduled for examination by interval, period, and outage.also shows when the item was last examined.

I. Instructions
Gives specific details for each item,i.e.,material type and thickness,relief request number(if applicable),and any other information which will aid in the examination of the item.

5.2 Description of Summary Submittal Tables

The tables included in this submittal (appendices A, B, & C for Class 1, 2, & 3 respectively) summarize by code category and code item number the total number of each item in the plant. Further definition is given as to the number of items to be selected for examination during the Second Ten Year Interval.

The tables in appendices D, E, & F summarize by code catergory and code item number the hangers and supports subject to examination per Subsection IWF for Class 1, 2, & 3 respectively.

Also included in the summary tables are the piping systems which were subject to examination during the First Ten Year Inservice Inspection Interval but are exempted for examination per Code Case N-408.These items are identified with "dummy" item numbers for correlation purposes only.

All tables and isometric drawings used for in the Second Ten Year Inservice Inspection Program are developed from the Plant "As Built" Drawings and from the First Ten Year Inservice Inspection Program.

PLANT ST.LUCIE UNIT 1
INSERVICE INSPECTION LONG TERM PLAN
CLASS 1 COMPONENTS

REACTOR VESSEL HEAD

SUMMARY NUMBER	EXAMINATION AREA IDENTIFICATION	LOOP OR PIPE	INSPECTION INTERVAL ASME SEC.XI ITEM #	ASME SEC. XI CATGY	NDE METH	OUTAGE YEAR FIRST PERIOD OUTAGE 1 2 3 4	SECOND PERIOD OUTAGE 1 2 3 4	THIRD PERIOD OUTAGE 1 2 3 4	PRESERVICE YEAR INSTRUCTIONS
	RPVCH REF. DWG. NO.								
000023	RPV-CH-209-03C MERID. WELD @ 180		B1.2	B-B	UT	1 -- -- 87 -- -- -- 2 -- -- -- -- -- -- 3 -- -- -- -- -- -- 4 -- -- -- -- -- --	-- -- -- -- -- --	87 -- -- -- -- -- -- -- -- -- -- -- -- -- -- --	EXAMINE 10% OF WELD.

87 - 10% OF WELD LENGTH EXAMINED

FIGURE 5.1-1

ST. LUCIE NUCLEAR PLANT UNIT 1
INSERVICE INSPECTION PLAN FOR THE FIRST INTERVAL
CLASS 1 SECTION XI SUMMARY
TABLE B

CATEGORY C-A - PRESSURE RETAINING WELDS IN PRESSURE VESSELS

ASME SEC. XI ITEM #	ITEM DESCRIPTION	EXAM METHOD	SYSTEM DESCRIPTION	ZONE	NUMBER OF COMPONENTS	RELIEF REQ.	# OF COMPONENTS SCHEDULED/COMPLETED 1ST PER	2ND PER	3RD PER

FIGURE 5.2.1

6.0 Records and Data Management

Records of the ISI Plan, schedules, calibration standards, examination procedures, examination results and reports, certifications, and corrective actions required and taken, will be developed, submitted and maintained in accordance with the requirements ASME Section XI, Article IWA-6000.

APPENDIX A

CLASS 1 EXAMINATION SUMMARY TABLES

CATEGORY B-A - PRESSURE RETAINING WELDS IN REACTOR VESSEL

ASME SEC. XI ITEM #	ITEM DESCRIPTION	EXAM METHOD	SYSTEM DESCRIPTION	ZONE	NUMBER OF COMPONENTS	RELIEF REQ.	# OF COMPONENTS SCHEDULED/COMPLETED 1ST PER	2ND PER	3RD PER
B1.11	CIRCUMFERENTIAL SHELL WELDS	VOLUMETRIC	RCS RPV	1	1	RR-1	0/0	0/0	1/0
B1.12	LONGITUDINAL SHELL WELDS	VOLUMETRIC	RCS RPV	1	9	RR-1	0/0	0/0	1/0
B1.21	CIRCUMFERENTIAL HEAD WELDS	VOLUMETRIC	RCS RPV	1	1	RR-1	0/0	0/0	1/0
B1.21	CIRCUMFERENTIAL HEAD WELDS	VOLUMETRIC	RCS CLOSURE HEAD	2	1		0/0	0/0	1/0
B1.22	MERIDIONAL HEAD WELDS	VOLUMETRIC	RCS RPV	1	6	RR-1	0/0	0/0	1/0
B1.22	MERIDIONAL HEAD WELDS	VOLUMETRIC	RCS CLOSURE HEAD	2	6	RR-2	0/0	1/0	0/0
B1.30	SHELL-TO-FLANGE WELD	VOLUMETRIC	RCS RPV	1	1	RR-1	1/0	1/0	1/0
	***** NOTE :EXAMINE 1/4 1ST PERIOD, 1/4 2ND PERIOD, 1/2 3RD PERIOD								
B1.40	HEAD-TO-FLANGE WELD	VOLUMETRIC SURFACE	RCS CLOSURE HEAD	2	1	RR-2	1/0	1/0	1/0
	***** NOTE :EXAMINE 1/3 1ST PER, 1/3 2ND PER, 1/3 3RD PER								
B1.50	REPAIR WELDS	VOLUMETRIC	RCS RPV	1	0		0/0	0/0	0/0
B1.51	REPAIR WELDS-BELTLINE REGION	VOLUMETRIC	RCS RPV	1	0		0/0	0/0	0/0

CATEGORY B-B - PRESSURE RETAINING WELDS IN PRESSURIZER

ASME SEC. XI ITEM #	ITEM DESCRIPTION	EXAM METHOD	SYSTEM DESCRIPTION	ZONE	NUMBER OF COMPONENTS	RELIEF REQ.	# OF COMPONENTS SCHEDULED/COMPLETED 1ST PER	2ND PER	3RD PER
B2.10	PRESSURIZER-SHELL-TO-HEAD WELDS	VOLUMETRIC	RCS	5	0		0/0	0/0	0/0
B2.11	PRESSURIZER-CIRCUMFERENTIAL SHELL-TO-HEAD WELDS	VOLUMETRIC	RCS	5	2		1/0	1/0	0/0
B2.12	PRESSURIZER-LONGITUDINAL SHELL WELDS	VOLUMETRIC	RCS	5	4		1/0	1/0	0/0
B2.21	CIRCUMFERENTIAL HEAD WELDS	VOLUMETRIC	RCS	5	1		0/0	0/0	1/0
B2.22	MERIDIONAL HEAD WELDS	VOLUMETRIC	RCS	5	4		0/0	0/0	1/0
B2.31	STEAM GENERATORS (PRIMARY SIDE)-CIRCUMFERENTIAL HEAD WELDS ***** NOTE :EXAMINE 1/3 1ST PERIOD, 1/3 2ND PERIOD, 1/3 3RD PERIOD	VOLUMETRIC	RCS SG-1A	3	4	RR-3	1/0	1/0	1/0
B2.31	STEAM GENERATORS (PRIMARY SIDE)-CIRCUMFERENTIAL HEAD WELDS	VOLUMETRIC	RCS SG-1B	4	4		0/0	0/0	0/0
B2.32	STEAM GENERATORS (PRIMARY SIDE)-MERIDIONAL HEAD WELDS ***** NOTE :NUMBER OF COMPONENTS INCLUDES 4 LONG. SEAMS IN EXTENSION RING. ALL FOUR EXAMINED WHEN TUBESHEET TO HEAD DONE.	VOLUMETRIC	RCS SG-1A	3	9	RR-3	1/0	1/0	2/0
B2.32	STEAM GENERATORS (PRIMARY SIDE)-MERIDIONAL HEAD WELDS ***** NOTE :NUMBER OF COMPONENTS INCLUDES 4 LONG. SEAMS IN EXTENSION RING. ALL FOUR EXAMINED WHEN TUBESHEET TO HEAD DONE.	VOLUMETRIC	RCS SG-1B	4	9		0/0	0/0	0/0
B2.40	STEAM GENERATORS (PRIMARY SIDE)-TUBESHEET-TO-HEAD WELD ***** NOTE :EXAMINE 1/3 1ST PERIOD, 1/3 2ND PERIOD, 1/3 3RD PERIOD	VOLUMETRIC	SG-1A	3	1	RR-3	1/0	1/0	1/0
B2.40	STEAM GENERATORS (PRIMARY SIDE)-TUBESHEET-TO-HEAD WELD	VOLUMETRIC	SG-1B	4	1		0/0	0/0	0/0
B2.50	HEAT EXCHANGERS (PRIMARY SIDE) -HEAD-HEAD WELDS	VOLUMETRIC	RCS N/A		0		0/0	0/0	0/0
B2.51	HEAT EXCHANGERS (PRIMARY SIDE) -HEAD-CIRCUMFERENTIAL HEAD WELDS	VOLUMETRIC	RCS N/A		0		0/0	0/0	0/0

ST. LUCIE NUCLEAR PLANT UNIT 1
INSERVICE INSPECTION PLAN FOR THE FIRST INTERVAL
CLASS 1 SECTION XI SUMMARY
TABLE A

CATEGORY B-B - PRESSURE RETAINING WELDS IN PRESSURIZER

ASME SEC. XI ITEM #	ITEM DESCRIPTION	EXAM METHOD	SYSTEM DESCRIPTION	ZONE	NUMBER OF COMPONENTS	RELIEF REQ.	# OF COMPONENTS SCHEDULED/COMPLETED 1ST PER	2ND PER	3RD PER
B2.52	HEAT EXCHANGERS (PRIMARY SIDE) -HEAD-MERIDIONAL HEAD WELDS	VOLUMETRIC	RCS N/A		0		0/0	0/0	0/0
B2.60	HEAT EXCHANGERS (PRIMARY SIDE) -SHELL-TUBESHEET-TO-HEAD WELDS	VOLUMETRIC	N/A		0		0/0	0/0	0/0
B2.70	HEAT EXCHANGERS (PRIMARY SIDE) -SHELL-LONGITUDINAL WELDS	VOLUMETRIC	N/A		0		0/0	0/0	0/0
B2.80	HEAT EXCHANGERS (PRIMARY SIDE) -SHELL-TUBESHEET-TO-SHELL WELDS	VOLUMETRIC	N/A		0		0/0	0/0	0/0

ST. LUCIE NUCLEAR PLANT UNIT 1
INSERVICE INSPECTION PLAN FOR THE FIRST INTERVAL
CLASS 1 SECTION XI SUMMARY
TABLE A

CATEGORY B-D - FULL PENETRATION WELDS OF NOZZLES IN REACTOR VESSEL (INSPECTION PROGRAM A)

ASME SEC. XI ITEM #	ITEM DESCRIPTION	EXAM METHOD	SYSTEM DESCRIPTION	ZONE	NUMBER OF COMPONENTS	RELIEF REQ.	# OF COMPONENTS SCHEDULED/COMPLETED 1ST PER	2ND PER	3RD PER
B3.90	REACTOR VESSEL-NOZZLE-TO -VESSEL WELDS	VOLUMETRIC	RCS RPV	1	6	RR-4	2/0	0/0	4/0
B3.100	REACTOR VESSEL-NOZZLE INSIDE RADIUS SECTION	VOLUMETRIC	RCS RPV	1	6	RR-4	2/0	0/0	4/0
B3.110	PRESSURIZER-NOZZLE-TO-VESSEL WELDS	VOLUMETRIC	RCS	5	6	RR-5	2/0	2/0	2/0
B3.120	PRESSURIZER-NOZZLE INSIDE RADIUS SECTION	VOLUMETRIC	RCS	5	6	RR-5	2/0	2/0	2/0
B3.130	STEAM GENERATORS (PRIMARY SIDE)-NOZZLE-TO-VESSEL WELDS	VOLUMETRIC	RCS SG-1A	3	3	RR-3	2/0	1/0	0/0
B3.130	STEAM GENERATORS (PRIMARY SIDE)-NOZZLE-TO-VESSEL WELDS	VOLUMETRIC	RCS SG-1B	4	3	RR-3	0/0	1/0	2/0
B3.140	STEAM GENERATORS (PRIMARY SIDE)-NOZZLE INSIDE RADIUS SECTION	VOLUMETRIC	RCS SG-1A	3	3	RR-3	2/0	1/0	0/0
B3.140	STEAM GENERATORS (PRIMARY SIDE)-NOZZLE INSIDE RADIUS SECTION	VOLUMETRIC	RCS SG-1B	4	3	RR-3	0/0	1/0	2/0
B3.150	HEAT EXCHANGERS (PRIMARY SIDE) -NOZZLE-TO-VESSEL WELDS	VOLUMETRIC	RCS N/A		0		0/0	0/0	0/0
B3.160	HEAT EXCHANGERS (PRIMARY SIDE) -NOZZLE INSIDE RADIUS SECTION	VOLUMETRIC	RCS N/A		0		0/0	0/0	0/0

CATEGORY B-E - PRESSURE RETAINING PARTIAL PENETRATION WELDS IN VESSELS

ASME SEC. XI ITEM #	ITEM DESCRIPTION	EXAM METHOD	SYSTEM DESCRIPTION	ZONE	NUMBER OF COMPONENTS	RELIEF REQ.	# OF COMPONENTS SCHEDULED/COMPLETED 1ST PER	2ND PER	3RD PER
B4.10	PARTIAL PENETRATION WELDS	VISUAL VT-2	RCS		0		0/0	0/0	0/0
B4.11	VESSEL NOZZLES	VISUAL VT-2	RCS N/A		0		0/0	0/0	0/0
B4.12	CONTROL ROD DRIVE NOZZLES	VISUAL VT-2	RCS CLOSURE HEAD	2	91		0/0	0/0	23/0
B4.13	INSTRUMENTATION NOZZLES	VISUAL VT-2	RCS CLOSURE HEAD	2	10		0/0	0/0	3/0
B4.20	PRESSURIZER-HEATER PENETRATION WELDS	VISUAL VT-2	RCS PRESSURIZER	5	120		0/0	0/0	120/0

CATEGORY B-F - PRESSURE RETAINING DISSIMILAR METAL WELDS IN REACTOR VESSEL

ASME SEC. XI ITEM #	ITEM DESCRIPTION	EXAM METHOD	SYSTEM DESCRIPTION	ZONE	NUMBER OF COMPONENTS	RELIEF REQ.	# OF COMPONENTS SCHEDULED/COMPLETED 1ST PER	2ND PER	3RD PER
B5.10	REACTOR VESSEL-NOZZLE-TO-SAFE END BUTT WELDS >= 4 INCHES NOMINAL PIPE SIZE	VOLUMETRIC SURFACE	RCS RPV	1	0		0/0	0/0	0/0
B5.20	REACTOR VESSEL-NOZZLE-TO-SAFE END BUTT WELDS < 4 INCHES NOMINAL PIPE SIZE		RCS RPV	1	0		0/0	0/0	0/0
B5.20	REACTOR VESSEL-NOZZLE-TO-SAFE END BUTT WELDS < 4 INCHES NOMINAL PIPE SIZE	SURFACE	RCS RPV	1	0		0/0	0/0	0/0
B5.30	REACTOR VESSEL-NOZZLE-TO-SAFE END SOCKET WELDS	SURFACE	RCS RPV	1	0		0/0	0/0	0/0
B5.40	PRESSURIZER-NOZZLE-TO-SAFE END BUTT WELDS >= 4 INCHES NOMINAL PIPE SIZE	VOLUMETRIC SURFACE	RCS PRESSURE	5	3		1/0	1/0	1/0
B5.50	PRESSURIZER-NOZZLE-TO-SAFE END BUTT WELDS < 4 INCHES NOMINAL PIPE SIZE	SURFACE	RCS PRESSURIZER	5	0		0/0	0/0	0/0
B5.60	PRESSURIZER-NOZZLE-TO-SAFE END SOCKET WELDS	SURFACE	RCS PRESSURIZER	5	0		0/0	0/0	0/0
B5.70	STEAM GENERATOR-NOZZLE-TO-SAFE END BUTT WELDS >= 4 INCHES NOMINAL PIPE SIZE		SG-1A, SG-1B	3,4	0		0/0	0/0	0/0
B5.70	STEAM GENERATOR-NOZZLE-TO-SAFE END BUTT WELDS >= 4 INCHES NOMINAL PIPE SIZE	VOLUMETRIC SURFACE	SG-1A,SG-1B	3,4	0		0/0	0/0	0/0
B5.80	STEAM GENERATOR-NOZZLE-TO-SAFE END BUTT WELDS < 4 INCHES NOMINAL PIPE SIZE		SG-1A,SG-1B	3,4	0		0/0	0/0	0/0
B5.80	STEAM GENERATOR-NOZZLE-TO-SAFE END BUTT WELDS < 4 INCHES NOMINAL PIPE SIZE	SURFACE	SG-1A,SG-1B	3,4	0		0/0	0/0	0/0
B5.90	STEAM GENERATOR-NOZZLE-TO-SAFE END SOCKET WELDS	SURFACE	RCS SG-1A,SG-1B	3,4	0		0/0	0/0	0/0

CATEGORY B-F - PRESSURE RETAINING DISSIMILAR METAL WELDS IN REACTOR VESSEL

ASME SEC. XI ITEM #	ITEM DESCRIPTION	EXAM METHOD	SYSTEM DESCRIPTION	ZONE	NUMBER OF COMPONENTS	RELIEF REQ.	# OF COMPONENTS SCHEDULED/COMPLETED 1ST PER	2ND PER	3RD PER
B5.100	HEAT EXCHANGERS-NOZZLE-TO-SAFE END BUTT WELDS >= 4 INCHES NOMINAL PIPE SIZE		RCS N/A		0		0/0	0/0	0/0
B5.100	HEAT EXCHANGERS-NOZZLE-TO-SAFE END BUTT WELDS >= 4 INCHES NOMINAL PIPE SIZE	SURFACE	RCS N/A		0		0/0	0/0	0/0
B5.110	HEAT EXCHANGERS-NOZZLE-TO-SAFE END BUTT WELDS < 4 INCHES NOMINAL PIPE SIZE	SURFACE	RCS N/A		0		0/0	0/0	0/0
B5.110	HEAT EXCHANGERS-NOZZLE-TO-SAFE END BUTT WELDS < 4 INCHES NOMINAL PIPE SIZE		RCS N/A		0		0/0	0/0	0/0
B5.120	HEAT EXCHANGERS-NOZZLE-TO-SAFE END SOCKET WELDS	SURFACE	RCS N/A		0		0/0	0/0	0/0
B5.130	PIPING-DISSIMILAR METAL BUTT WELDS >= 4 INCHES NOMINAL PIPE SIZE	VOLUMETRIC SURFACE	RCS MCP	8	1		1/0	0/0	0/0
B5.130	PIPING-DISSIMILAR METAL BUTT WELDS >= 4 INCHES NOMINAL PIPE SIZE	VOLUMETRIC SURFACE	RCS MCP	9	1		0/0	0/0	1/0
B5.130	PIPING-DISSIMILAR METAL BUTT WELDS >= 4 INCHES NOMINAL PIPE SIZE	VOLUMETRIC SURFACE	RCS MCP	10	1		1/0	0/0	0/0
B5.130	PIPING-DISSIMILAR METAL BUTT WELDS >= 4 INCHES NOMINAL PIPE SIZE	VOLUMETRIC SURFACE	RCS MCP	11	1		0/0	0/0	1/0
B5.130	PIPING-DISSIMILAR METAL BUTT WELDS >= 4 INCHES NOMINAL PIPE SIZE	VOLUMETRIC SURFACE	RCS MCP	12	1		1/0	0/0	0/0
B5.130	PIPING-DISSIMILAR METAL BUTT WELDS >= 4 INCHES NOMINAL PIPE SIZE	VOLUMETRIC SURFACE	RCS MCP	13	1		0/0	1/0	0/0

CATEGORY B-F - PRESSURE RETAINING DISSIMILAR METAL WELDS IN REACTOR VESSEL

ASME SEC. XI ITEM #	ITEM DESCRIPTION	EXAM METHOD	SYSTEM DESCRIPTION	ZONE	NUMBER OF COMPONENTS	RELIEF REQ.	# OF COMPONENTS SCHEDULED/COMPLETED 1ST PER	2ND PER	3RD PER
B5.130	PIPING-DISSIMILAR METAL BUTT WELDS >= 4 INCHES NOMINAL PIPE SIZE	VOLUMETRIC SURFACE	RCS MCP	14	1		1/0	0/0	0/0
B5.130	PIPING-DISSIMILAR METAL BUTT WELDS >= 4 INCHES NOMINAL PIPE SIZE	VOLUMETRIC SURFACE	RCS MCP	15	1		0/0	1/0	0/0
B5.130	PIPING-DISSIMILAR METAL BUTT WELDS >= 4 INCHES NOMINAL PIPE SIZE	VOLUMETRIC SURFACE	RCS SURGE LINE	16	2		1/0	1/0	0/0
B5.130	PIPING-DISSIMILAR METAL BUTT WELDS >= 4 INCHES NOMINAL PIPE SIZE	VOLUMETRIC SURFACE	RCS SI NOZZLE	21	1		1/0	0/0	0/0
B5.130	PIPING-DISSIMILAR METAL BUTT WELDS >= 4 INCHES NOMINAL PIPE SIZE	VOLUMETRIC SURFACE	RCS SI NOZZLE	22	1		1/0	0/0	0/0
B5.130	PIPING-DISSIMILAR METAL BUTT WELDS >= 4 INCHES NOMINAL PIPE SIZE	VOLUMETRIC SURFACE	RCS SI NOZZLE	23	1		1/0	0/0	0/0
B5.130	PIPING-DISSIMILAR METAL BUTT WELDS >= 4 INCHES NOMINAL PIPE SIZE	VOLUMETRIC SURFACE	RCS SI NOZZLE	24	1		0/0	0/0	1/0
B5.130	PIPING-DISSIMILAR METAL BUTT WELDS >= 4 INCHES NOMINAL PIPE SIZE		RCS PR. SPRAY	25	4		2/0	0/0	2/0
B5.130	PIPING-DISSIMILAR METAL BUTT WELDS >= 4 INCHES NOMINAL PIPE SIZE		RCS S.D.C.	28	1		1/0	0/0	0/0
B5.130	PIPING-DISSIMILAR METAL BUTT WELDS >= 4 INCHES NOMINAL PIPE SIZE		RCS S.D.C.	29	1		1/0	0/0	0/0
B5.130	PIPING-DISSIMILAR METAL BUTT WELDS >= 4 INCHES NOMINAL PIPE SIZE		RCS PR. RELIEF	38	1		0/0	0/0	1/0

CATEGORY B-F - PRESSURE RETAINING DISSIMILAR METAL WELDS IN REACTOR VESSEL

ASME SEC. XI ITEM #	ITEM DESCRIPTION	EXAM METHOD	SYSTEM DESCRIPTION	ZONE	NUMBER OF COMPONENTS	RELIEF REQ.	# OF COMPONENTS SCHEDULED/COMPLETED 1ST PER	2ND PER	3RD PER
B5.140	PIPING-DISSIMILAR METAL BUTT WELDS < 4 INCHES NOMINAL PIPE SIZE	SURFACE	RCS MCP	6	1		0/0	0/0	1/0
B5.140	PIPING-DISSIMILAR METAL BUTT WELDS < 4 INCHES NOMINAL PIPE SIZE	SURFACE	RCS PRESSURE SPRAY	26	1		0/0	1/0	0/0
B5.140	PIPING-DISSIMILAR METAL BUTT WELDS < 4 INCHES NOMINAL PIPE SIZE	SURFACE	RCS PRESSURE SPRAY	27	1		0/0	0/0	1/0
B5.140	PIPING-DISSIMILAR METAL BUTT WELDS < 4 INCHES NOMINAL PIPE SIZE	SURFACE	RCS CHARGING	31	1		0/0	0/0	1/0
B5.140	PIPING-DISSIMILAR METAL BUTT WELDS < 4 INCHES NOMINAL PIPE SIZE	SURFACE	RCS CHARGING	32	1		0/0	1/0	0/0
B5.140	PIPING-DISSIMILAR METAL BUTT WELDS < 4 INCHES NOMINAL PIPE SIZE	SURFACE	RCS DRAIN	33	1		1/0	0/0	0/0
B5.140	PIPING-DISSIMILAR METAL BUTT WELDS < 4 INCHES NOMINAL PIPE SIZE	SURFACE	RCS DRAIN	34	1		0/0	1/0	0/0
B5.140	PIPING-DISSIMILAR METAL BUTT WELDS < 4 INCHES NOMINAL PIPE SIZE	SURFACE	RCS DRAIN	35	1		1/0	0/0	0/0
B5.140	PIPING-DISSIMILAR METAL BUTT WELDS < 4 INCHES NOMINAL PIPE SIZE	SURFACE	RCS DRAIN	36	1		0/0	0/0	1/0
B5.140	PIPING-DISSIMILAR METAL BUTT WELDS < 4 INCHES NOMINAL PIPE SIZE	SURFACE	RCS PRESSURE RELIEF	38	1		1/0	0/0	0/0
B5.150	PIPING-DISSIMILAR METAL SOCKET WELDS		RCS N/A		0		0/0	0/0	0/0

CATEGORY B-G-1 - PRESSURE RETAINING BOLTING GREATER THAN 2 INCHES IN DIAMETER IN REACTOR VESSEL

ASME SEC. XI ITEM #	ITEM DESCRIPTION	EXAM METHOD	SYSTEM DESCRIPTION	ZONE	NUMBER OF COMPONENTS	RELIEF REQ.	# OF COMPONENTS SCHEDULED/COMPLETED 1ST PER	2ND PER	3RD PER
B6.10	REACTOR VESSEL-CLOSURE HEAD NUTS	SURFACE	RCS RPV	1	54		18/0	18/0	18/0
B6.20	REACTOR VESSEL-CLOSURE STUDS, IN PLACE	VOLUMETRIC	RCS RPV	1	0		0/0	0/0	0/0
B6.30	REACTOR VESSEL-CLOSURE STUDS, WHEN REMOVED	VOLUMETRIC SURFACE	RCS RPV	1	54		18/0	18/0	18/0
B6.40	REACTOR VESSEL-THREADS IN FLANGE ***** NOTE :EXAMINE 1/3 1ST PERIOD, 1/3 2ND PERIOD, 1/3 3RD PERIOD	VOLUMETRIC	RCS RPV	1	54		18/0	18/0	18/0
B6.50	REACTOR VESSEL-CLOSURE WASHERS , BUSHINGS	VISUAL VT-1	RCS RPV	1	54		18/0	18/0	18/0
B6.60	PRESSURIZER-BOLTS AND STUDS	VOLUMETRIC	RCS PRESSURE	5	0		0/0	0/0	0/0
B6.70	PRESSURIZER-FLANGE SURFACE, WHEN CONNECTION DISASSEMBLED	VISUAL VT-1	RCS PRESSURE	5	0		0/0	0/0	0/0
B6.80	PRESSURIZER-NUTS, BUSHINGS, AND WASHERS	VISUAL VT-1	RCS PRESSURE	5	0		0/0	0/0	0/0
B6.90	STEAM GENERATORS-BOLTS AND STUDS	VOLUMETRIC	SG-1A,SG-1B	3,4	0		0/0	0/0	0/0
B6.100	STEAM GENERATORS-FLANGE SURFACE, WHEN CONNECTION DISASSEMBLED	VISUAL VT-1	RCS SG-1A,SG-1B	3,4	0		0/0	0/0	0/0
B6.110	STEAM GENERATORS-NUTS, BUSHINGS, AND WASHERS	VISUAL VT-1	RCS SG-1A,SG-1B	3,4	0		0/0	0/0	0/0
B6.120	HEAT EXCHANGERS-BOLTS AND STUDS	VOLUMETRIC	RCS N/A		0		0/0	0/0	0/0
B6.130	HEAT EXCHANGERS-FLANGE SURFACE , WHEN CONNECTION DISASSEMBLED	VISUAL VT-1	RCS N/A		0		0/0	0/0	0/0
B6.140	HEAT EXCHANGERS-NUTS, BUSHINGS , AND WASHERS	VISUAL VT-1	RCS N/A		0		0/0	0/0	0/0

ST. LUCIE NUCLEAR PLANT UNIT 1
INSERVICE INSPECTION PLAN FOR THE FIRST INTERVAL
CLASS 1 SECTION XI SUMMARY
TABLE A

CATEGORY B-G-1 - PRESSURE RETAINING BOLTING GREATER THAN 2 INCHES IN DIAMETER IN REACTOR VESSEL

ASME SEC. XI ITEM #	ITEM DESCRIPTION	EXAM METHOD	SYSTEM DESCRIPTION	ZONE	NUMBER OF COMPONENTS	RELIEF REQ.	# OF COMPONENTS SCHEDULED/COMPLETED 1ST PER	2ND PER	3RD PER
B6.150	PIPING-BOLTS AND STUDS	VOLUMETRIC	RCS N/A		0		0/0	0/0	0/0
B6.160	PIPING-FLANGE SURFACE, WHEN CONNECTION DISASSEMBLED	VISUAL VT-1	RCS N/A		0		0/0	0/0	0/0
B6.170	PIPING-NUTS, BUSHINGS, AND WASHERS	VISUAL VT-1	RCS N/A		0		0/0	0/0	0/0
B6.180	PUMPS-BOLTS AND STUDS	VOLUMETRIC	RCS RCP-1A1	17	16		16/0	0/0	0/0
B6.180	PUMPS-BOLTS AND STUDS	VOLUMETRIC	RCS RCP-1A2	18	16		0/0	0/0	16/0
B6.180	PUMPS-BOLTS AND STUDS	VOLUMETRIC	RCS RCP-1B1	19	16		0/0	16/0	0/0
B6.180	PUMPS-BOLTS AND STUDS	VOLUMETRIC	RCS RCP-1B2	20	16		0/0	0/0	16/0
B6.190	PUMPS-FLANGE SURFACE, WHEN CONNECTION DISASSEMBLED ***** NOTE :SEE RELIEF REQUEST	VISUAL VT-1	RCS RCP-1A1	17	1	RR-7	0/0	0/0	0/0
B6.190	PUMPS-FLANGE SURFACE, WHEN CONNECTION DISASSEMBLED ***** NOTE :SEE RELIEF REQUEST	VISUAL VT-1	RCS RCP-1A2	18	1	RR-7	0/0	0/0	0/0
B6.190	PUMPS-FLANGE SURFACE, WHEN CONNECTION DISASSEMBLED ***** NOTE :SEE RELIEF REQUEST	VISUAL VT-1	RCS RCP-1B1	19	1	RR-7	0/0	0/0	0/0
B6.190	PUMPS-FLANGE SURFACE, WHEN CONNECTION DISASSEMBLED ***** NOTE :SEE RELIEF REQUEST	VISUAL VT-1	RCS RCP-1B2	20	1	RR-7	0/0	0/0	0/0
B6.200	PUMPS-NUTS, BUSHINGS, AND WASHERS	VISUAL VT-1	RCS RCP-1A1	17	16		16/0	0/0	0/0
B6.200	PUMPS-NUTS, BUSHINGS, AND WASHERS	VISUAL VT-1	RCS RCP-1A2	18	16		0/0	0/0	16/0
B6.200	PUMPS-NUTS, BUSHINGS, AND WASHERS	VISUAL VT-1	RCS RCP-1B1	19	16		0/0	16/0	0/0
B6.200	PUMPS-NUTS, BUSHINGS, AND WASHERS	VISUAL VT-1	RCS RCP-1B2	20	16		0/0	0/0	16/0

CATEGORY B-G-1 - PRESSURE RETAINING BOLTING GREATER THAN 2 INCHES IN DIAMETER IN REACTOR VESSEL

ASME SEC. XI ITEM #	ITEM DESCRIPTION	EXAM METHOD	SYSTEM DESCRIPTION	ZONE	NUMBER OF COMPONENTS	RELIEF REQ.	# OF COMPONENTS SCHEDULED/COMPLETED 1ST PER	2ND PER	3RD PER
B6.210	VALVES-BOLTS AND STUDS	VOLUMETRIC	RCS	N/A	0		0/0	0/0	0/0
B6.220	VALVES-FLANGE SURFACE, WHEN CONNECTION DISASSEMBLED	VISUAL VT-1	RCS	N/A	0		0/0	0/0	0/0
B6.230	VALVES-NUTS, BUSHINGS, AND WASHERS	VISUAL VT-1	RCS	N/A	0		0/0	0/0	0/0

CATEGORY B-G-2 - PRESSURE RETAINING BOLTING, 2 INCHES AND LESS IN DIAMETER IN REACTOR VESSEL

ASME SEC. XI ITEM #	ITEM DESCRIPTION	EXAM METHOD	SYSTEM DESCRIPTION	ZONE	NUMBER OF COMPONENTS	RELIEF REQ.	# OF COMPONENTS SCHEDULED/COMPLETED 1ST PER	2ND PER	3RD PER
B7.10	REACTOR VESSEL-BOLTS, STUDS, AND NUTS	VISUAL VT-1	RCS RPV	1	0		0/0	0/0	0/0
B7.20	PRESSURIZER-BOLTS, STUDS, AND NUTS	VISUAL VT-1	RCS PRESSURE	5	20		7/0	7/0	6/0
	***** NOTE :NUMBER OF ITEMS = 20 NUTS, 20 STUDS. EXAMINE 1/3 1ST PERIOD, 1/3 2ND PERIOD, 1/3 3RD PERIOD.								
B7.30	STEAM GENERATORS-BOLTS, STUDS, AND NUTS	VISUAL VT-1	RCS PRESSURE-1A	3	40		20/0	0/0	20/0
	***** NOTE :NUMBER OF ITEMS = 40 NUTS, 40 STUDS. EXAMINE 20 EACH 1ST PERIOD, 20 EACH 3RD PERIOD.								
B7.30	STEAM GENERATORS-BOLTS, STUDS, AND NUTS	VISUAL VT-1	RCS PRESSURE-1B	4	40		0/0	20/0	20/0
	***** NOTE :NUMBER OF ITEMS = 40 NUTS, 40 STUDS. EXAMINE 20 EACH 2ND PERIOD, 20 EACH 3RD PERIOD.								
B7.40	HEAT EXCHANGERS-BOLTS, STUDS, AND NUTS	VISUAL VT-1	RCS N/A		40		13/0	13/0	14/0
	***** NOTE :NUMBER OF ITEMS = 40 NUTS, 40 STUDS. EXAMINE 1/3 1ST PERIOD, 1/3 2ND PERIOD, 1/3 3RD PERIOD								
B7.50	PIPING-BOLTS, STUDS, AND NUTS	VISUAL VT-1	RCS	33	2		1/0	1/0	0/0
	***** NOTE :NUMBER OF ITEMS ARE FLANGES.								
B7.50	PIPING-BOLTS, STUDS, AND NUTS	VISUAL VT-1	RCS	34	1		0/0	1/0	0/0
	***** NOTE :NUMBER OF ITEMS ARE FLANGES.								
B7.50	PIPING-BOLTS, STUDS, AND NUTS	VISUAL VT-1	RCS	35	1		0/0	0/0	1/0
	***** NOTE :NUMBER OF ITEMS ARE FLANGES.								
B7.50	PIPING-BOLTS, STUDS, AND NUTS	VISUAL VT-1	RCS	36	1		1/0	0/0	0/0
	***** NOTE :NUMBER OF ITEMS ARE FLANGES.								
B7.50	PIPING-BOLTS, STUDS, AND NUTS	VISUAL VT-1	RCS	38	1		0/0	1/0	0/0
	***** NOTE :NUMBER OF ITEMS ARE FLANGES.								
B7.60	PUMPS-BOLTS, STUDS, AND NUTS	VISUAL VT-1	RCS	17	0		1/0	1/0	1/0
	***** NOTE :EXAMINE 1/3 1ST PERIOD, 1/3 2ND PERIOD, 1/3 3RD PERIOD								
B7.60	PUMPS-BOLTS, STUDS, AND NUTS	VISUAL VT-1	RCS	18	0		1/0	1/0	1/0
	***** NOTE :EXAMINE 1/3 1ST PERIOD, 1/3 2ND PERIOD, 1/3 3RD PERIOD								
B7.60	PUMPS-BOLTS, STUDS, AND NUTS	VISUAL VT-1	RCS	19	0		1/0	1/0	1/0
	***** NOTE :EXAMINE 1/3 1ST PERIOD, 1/3 2ND PERIOD, 1/3 3RD PERIOD								

CATEGORY B-G-2 - PRESSURE RETAINING BOLTING, 2 INCHES AND LESS IN DIAMETER IN REACTOR VESSEL

ASME SEC. XI ITEM #	ITEM DESCRIPTION	EXAM METHOD	SYSTEM DESCRIPTION	ZONE	NUMBER OF COMPONENTS	RELIEF REQ.	# OF COMPONENTS SCHEDULED/COMPLETED 1ST PER	2ND PER	3RD PER
B7.60	PUMPS-BOLTS, STUDS, AND NUTS	VISUAL VT-1	RCS	20	0		1/0	1/0	1/0
	***** NOTE :EXAMINE 1/3 1ST PERIOD, 1/3 2ND PERIOD, 1/3 3RD PERIOD								
B7.70	VALVES-BOLTS, STUDS, AND NUTS	VISUAL VT-1	RCS 12" VALVES		8		1/0	1/0	1/0
	***** NOTE :EXAMINE 1/3 1ST PERIOD, 1/3 2ND PERIOD, 1/3 3RD PERIOD.								
B7.70	VALVES-BOLTS, STUDS, AND NUTS	VISUAL VT-1	RCS 10" VALVES		4		1/0	1/0	1/0
	***** NOTE :EXAMINE 1/3 1ST PERIOD, 1/3 2ND PERIOD, 1/3 3RD PERIOD.								
B7.70	VALVES-BOLTS, STUDS, AND NUTS	VISUAL VT-1	RCS 6" VALVES		8		1/0	1/0	1/0
	***** NOTE :EXAMINE 1/3 1ST PERIOD, 1/3 2ND PERIOD, 1/3 3RD PERIOD.								
B7.70	VALVES-BOLTS, STUDS, AND NUTS	VISUAL VT-1	RCS 3" VALVES		11		1/0	1/0	1/0
	***** NOTE :EXAMINE 1/3 1ST PERIOD, 1/3 2ND PERIOD, 1/3 3RD PERIOD.								
B7.70	VALVES-BOLTS, STUDS, AND NUTS	VISUAL VT-1	RCS 2.5" VALVES		4		1/0	1/0	1/0
	***** NOTE :EXAMINE 1/3 1ST PERIOD, 1/3 2ND PERIOD, 1/3 3RD PERIOD.								
B7.70	VALVES-BOLTS, STUDS, AND NUTS	VISUAL VT-1	RCS 2" VALVES		25		1/0	1/0	1/0
	***** NOTE :EXAMINE 1/3 1ST PERIOD, 1/3 2ND PERIOD, 1/3 3RD PERIOD.								
B7.80	CRD HOUSINGS-BOLTS, STUDS, AND NUTS	VISUAL VT-1	RCS	N/A	0		0/0	0/0	0/0

CATEGORY B-H - INTEGRAL ATTACHMENTS FOR REACTOR VESSEL

ASME SEC. XI ITEM #	ITEM DESCRIPTION	EXAM METHOD	SYSTEM DESCRIPTION	ZONE	NUMBER OF COMPONENTS	RELIEF REQ.	# OF COMPONENTS SCHEDULED/COMPLETED 1ST PER	2ND PER	3RD PER
B8.10	REACTOR VESSEL-INTEGRALLY WELDED ATTACHMENTS	VOLUMETRIC OR SURFACE	RCS N/A PER B8.10(1)	1	0		0/0	0/0	0/0
B8.20	PRESSURIZER-INTEGRALLY WELDED ATTACHMENTS	VOLUMETRIC OR SURFACE	RCS PRESSURE	5	1		1/0	1/0	1/0
	***** NOTE :EXAMINE 1/3 1ST PERIOD, 1/3 2ND PERIOD, 1/3 3RD PERIOD								
B8.30	STEAM GENERATORS-INTEGRALLY WELDED ATTACHMENTS	VOLUMETRIC OR SURFACE	RCS	3	1		1/0	1/0	1/0
	***** NOTE :EXAMINE 1/3 1ST PERIOD, 1/3 2ND PERIOD, 1/3 3RD PERIOD								
B8.30	STEAM GENERATORS-INTEGRALLY WELDED ATTACHMENTS	VOLUMETRIC OR SURFACE	RCS	4	1		0/0	0/0	0/0
B8.40	HEAT EXCHANGERS-INTEGRALLY WELDED ATTACHMENTS	VOLUMETRIC OR SURFACE	RCS N/A		0		0/0	0/0	0/0

ST. LUCIE NUCLEAR PLANT UNIT 1
INSERVICE INSPECTION PLAN FOR THE FIRST INTERVAL
CLASS 1 SECTION XI SUMMARY
TABLE A

CATEGORY B-J - PRESSURE RETAINING WELDS IN PIPING

ASME SEC. XI ITEM #	ITEM DESCRIPTION	EXAM METHOD	SYSTEM DESCRIPTION	ZONE	NUMBER OF COMPONENTS	RELIEF REQ.	# OF COMPONENTS SCHEDULED/COMPLETED 1ST PER	2ND PER	3RD PER
B9.11	CIRCUMFERENTIAL WELDS	VOLUMETRIC SURFACE	RCS MAIN COOLANT 42"-NPS		10	RR-6	1/0	1/0	2/0
B9.11	CIRCUMFERENTIAL WELDS	VOLUMETRIC SURFACE	RCS MAIN COOLANT 30"-NPS		44	RR-6	3/0	4/0	4/0
B9.11	CIRCUMFERENTIAL WELDS	VOLUMETRIC SURFACE	RCS PIPING: 12"-NPS		19		5/0	5/0	5/0
	***** NOTE :NUMBER TO EXAMINE: GREATER THAN 25% DUE TO EXCEEDING STRESS CRITERIA OR ARE TERMINAL ENDS PER TABLES - NOTE 1.								
B9.11	CIRCUMFERENTIAL WELDS	VOLUMETRIC SURFACE	RCS PIPING:10"-NPS		3		0/0	0/0	1/0
B9.11	CIRCUMFERENTIAL WELDS	VOLUMETRIC SURFACE	RCS PIPING: 4"-NPS		19		2/0	2/0	2/0
	***** NOTE :NUMBER TO EXAMINE: GREATER THAN 25% DUE TO EXCEEDING STRESS CRITERIA OR ARE TERMINAL ENDS PER TABLES - NOTE 1.								
B9.11	CIRCUMFERENTIAL WELDS	VOLUMETRIC SURFACE	SI PIPING: 12"-NPS		49		16/0	16/0	17/0
	***** NOTE :NUMBER TO EXAMINE: GREATER THAN 25% DUE TO EXCEEDING STRESS CRITERIA OR ARE TERMINAL ENDS PER TABLES - NOTE 1.								
B9.11	CIRCUMFERENTIAL WELDS	VOLUMETRIC SURFACE	SI PIPING: 10"-NPS		13		1/0	1/0	2/0
B9.11	CIRCUMFERENTIAL WELDS	VOLUMETRIC SURFACE	SI PIPING: 6"-NPS		162		50/0	50/0	62/0
	***** NOTE :NUMBER TO EXAMINE: GREATER THAN 25% DUE TO EXCEEDING STRESS CRITERIA OR ARE TERMINAL ENDS PER TABLES - NOTE 1.								
B9.12	LONGITUDINAL WELDS	VOLUMETRIC SURFACE	RCS MAIN COOLANT 42"-NPS		16		2/0	2/0	4/0
B9.12	LONGITUDINAL WELDS	VOLUMETRIC SURFACE	RCS MAIN COOLANT 30"-NPS		56		6/0	6/0	8/0
B9.21	CIRCUMFERENTIAL WELDS	SURFACE	RCS PIPING: 3"-NPS		47		4/0	4/0	4/0
B9.21	CIRCUMFERENTIAL WELDS	SURFACE	RCS PIPING: 2.5"-NPS		19		4/0	4/0	6/0
	***** NOTE :NUMBER TO EXAMINE: GREATER THAN 25% DUE TO EXCEEDING STRESS CRITERIA OR ARE TERMINAL ENDS PER TABLES - NOTE 1.								
B9.21	CIRCUMFERENTIAL WELDS	SURFACE	RCS PIPING: 2"-NPS		11		1/0	1/0	1/0
B9.21	CIRCUMFERENTIAL WELDS	SURFACE	CH PIPING: 2"-NPS		4		1/0	1/0	2/0

ST. LUCIE NUCLEAR PLANT UNIT 1
INSERVICE INSPECTION PLAN FOR THE FIRST INTERVAL
CLASS 1 SECTION XI SUMMARY
TABLE A

CATEGORY B-J - PRESSURE RETAINING WELDS IN PIPING

ASME SEC. XI ITEM #	ITEM DESCRIPTION	EXAM METHOD	SYSTEM DESCRIPTION	ZONE	NUMBER OF COMPONENTS	RELIEF REQ.	# OF COMPONENTS SCHEDULED/COMPLETED 1ST PER	2ND PER	3RD PER
B9.21	CIRCUMFERENTIAL WELDS	SURFACE	SI PIPING: 3"-NPS		20		6/0	6/0	8/0
	***** NOTE :NUMBER TO EXAMINE: GREATER THAN 25% DUE TO EXCEEDING STRESS CRITERIA OR ARE TERMINAL ENDS PER TABLES - NOTE 1.								
B9.21	CIRCUMFERENTIAL WELDS	SURFACE	SI PIPING: 2"-NPS		15		1/0	1/0	2/0
B9.22	LONGITUDINAL WELDS	SURFACE	RCS,SI N/A		0		0/0	0/0	0/0
B9.31	NOMINAL PIPE SIZE >= 4 IN.		RCS 12"		7		0/0	1/0	1/0
B9.32	NOMINAL PIPE SIZE <4 IN.		RCS 2"		7		0/0	1/0	1/0
B9.32	NOMINAL PIPE SIZE <4 IN.		RCS 3"		2		0/0	1/0	0/0
B9.32	NOMINAL PIPE SIZE <4 IN.		SI 2"		3		0/0	0/0	1/0
B9.40	SOCKET WELDS	SURFACE	RC 2"		69		6/0	6/0	6/0
B9.40	SOCKET WELDS	SURFACE	CH 2"		97		8/0	8/0	9/0

CATEGORY B-K-1 - INTEGRAL ATTACHMENTS FOR PIPING

ASME SEC. XI ITEM #	ITEM DESCRIPTION	EXAM METHOD	SYSTEM DESCRIPTION	ZONE	NUMBER OF COMPONENTS	RELIEF REQ.	# OF COMPONENTS SCHEDULED/COMPLETED 1ST PER	2ND PER	3RD PER
B10.10	PIPING-INTEGRALLY WELDED ATTACHMENTS	VOLUMETRIC SURFACE	SI 6"-SI-110		4		1/0	1/0	2/0
	***** NOTE :NUMBER OF COMPONENTS: LUGS, LOCATED AT A PENETRATION.								
B10.10	PIPING-INTEGRALLY WELDED ATTACHMENTS	VOLUMETRIC SURFACE	SI 6"-SI-111		2		0/0	1/0	1/0
	***** NOTE :NUMBER OF COMPONENTS: LUGS, LOCATED AT A PENETRATION.								
B10.10	PIPING-INTEGRALLY WELDED ATTACHMENTS	VOLUMETRIC SURFACE	SI 6"-SI-112		2		1/0	1/0	0/0
	***** NOTE :NUMBER OF COMPONENTS: LUGS, LOCATED AT A PENETRATION.								
B10.10	PIPING-INTEGRALLY WELDED ATTACHMENTS	VOLUMETRIC SURFACE	SI 6"-SI-113		2		1/0	0/0	1/0
	***** NOTE :NUMBER OF COMPONENTS: LUGS, LOCATED AT A PENETRATION.								
B10.20	PUMPS-INTEGRALLY WELDED ATTACHMENTS	VOLUMETRIC SURFACE	RCP 1A1		4		4/0	0/0	0/0
	***** NOTE :NUMBER OF COMPONENTS: LUGS								
B10.20	PUMPS-INTEGRALLY WELDED ATTACHMENTS	VOLUMETRIC SURFACE	RCP 1A2		4		0/0	0/0	4/0
	***** NOTE :NUMBER OF COMPONENTS: LUGS								
B10.20	PUMPS-INTEGRALLY WELDED ATTACHMENTS	VOLUMETRIC SURFACE	RCP 1B1		4		0/0	4/0	0/0
	***** NOTE :NUMBER OF COMPONENTS: LUGS								
B10.20	PUMPS-INTEGRALLY WELDED ATTACHMENTS	VOLUMETRIC SURFACE	RCP 1B3		4		0/0	0/0	4/0
	***** NOTE :NUMBER OF COMPONENTS: LUGS								
B10.30	VALVES-INTEGRALLY WELDED ATTACHMENTS	VOLUMETRIC SURFACE	RCS N/A		0		0/0	0/0	0/0

CATEGORY B-L-1 - PRESSURE RETAINING WELDS IN PUMP CASING

ASME SEC. XI ITEM #	ITEM DESCRIPTION	EXAM METHOD	SYSTEM DESCRIPTION	ZONE	NUMBER OF COMPONENTS	RELIEF REQ.	# OF COMPONENTS SCHEDULED/COMPLETED 1ST PER	2ND PER	3RD PER
B12.10	PUMPS-PUMP CASING WELDS	VOLUMETRIC	RCS RCP-1A1,1A2,1B1,1B2		4	RR-7	0/0	0/0	0/0
	***** NOTE :SEE RELIEF REQUEST.								

CATEGORY B-L-2 - PUMP CASINGS

ASME SEC. XI ITEM #	ITEM DESCRIPTION	EXAM METHOD	SYSTEM DESCRIPTION	ZONE	NUMBER OF COMPONENTS	RELIEF REQ.	# OF COMPONENTS SCHEDULED/COMPLETED 1ST PER	2ND PER	3RD PER
B12.20	PUMPS-PUMP CASINGS	VT-3	RCS RCP-1A1,1A2,1B1,1B2		4	RR-7	0/0	0/0	0/0
	***** NOTE :SEE RELIEF REQUEST.								

CATEGORY B-M-1 - PRESSURE RETAINING WELDS IN VALVE BODIES

ASME SEC. XI ITEM #	ITEM DESCRIPTION	EXAM METHOD	SYSTEM DESCRIPTION	ZONE	NUMBER OF COMPONENTS	RELIEF REQ.	# OF COMPONENTS SCHEDULED/COMPLETED 1ST PER	2ND PER	3RD PER
B12.30	VALVES-VALVE BODY WELDS < 4 INCHES NOMINAL PIPE SIZE	SURFACE	RCS,SI	NONE	0		0/0	0/0	0/0
B12.40	VALVES-VALVE BODY WELDS >= 4 INCHES NOMINAL PIPE SIZE	VOLUMETRIC	RCS,SI	NONE	0		0/0	0/0	0/0

CATEGORY B-M-2 - VALVE BODIES

ASME SEC. XI ITEM #	ITEM DESCRIPTION	EXAM METHOD	SYSTEM DESCRIPTION	ZONE	NUMBER OF COMPONENTS	RELIEF REQ.	# OF COMPONENTS SCHEDULED/COMPLETED 1ST PER	2ND PER	3RD PER
B12.50	VALVES-VALVE BODIES EXCEEDING 4 INCHES NOMINAL PIPE SIZE ***** NOTE :NUMBER TO EXAMINE: EXAMINE WHEN DISASSEMBLED.	INTERN VT-3	RCS,SI 12" VALVES		8	RR-8	0/0	0/0	0/0
B12.50	VALVES-VALVE BODIES EXCEEDING 4 INCHES NOMINAL PIPE SIZE ***** NOTE :NUMBER TO EXAMINE: EXAMINE WHEN DISASSEMBLED.	INTERN VT-3	RCS,SI 10" VALVES		4	RR-8	0/0	0/0	0/0
B12.50	VALVES-VALVE BODIES EXCEEDING 4 INCHES NOMINAL PIPE SIZE ***** NOTE :NUMBER TO EXAMINE: EXAMINE WHEN DISASSEMBLED.	INTERN VT-3	RCS,SI 6" VALVES		8	RR-8	0/0	0/0	0/0

ST. LUCIE NUCLEAR PLANT UNIT 1
INSERVICE INSPECTION PLAN FOR THE FIRST INTERVAL
CLASS 1 SECTION XI SUMMARY
TABLE A

CATEGORY B-N-1 - INTERIOR OF REACTOR VESSEL

ASME SEC. XI ITEM #	ITEM DESCRIPTION	EXAM METHOD	SYSTEM DESCRIPTION	ZONE	NUMBER OF COMPONENTS	RELIEF REQ.	# OF COMPONENTS SCHEDULED/COMPLETED 1ST PER	2ND PER	3RD PER
B13.10A	REACTOR VESSEL-VESSEL INTERIOR	VISUAL VT-3	RCS RPV	1	0		1/0	1/0	1/0
	***** NOTE :EXAMINE ACCESSIBLE AREAS EACH PERIOD.								
B13.10B	REACTOR VESSEL - CORE BARREL	VISUAL VT-3	RCS RPV	1	0		1/0	1/0	1/0
	***** NOTE :EXAMINE ACCESSIBLE AREAS EACH PERIOD.								

CATEGORY B-N-2 - INTEGRALLY WELDED CORE SUPPORT STRUCTURES AND INTERIOR ATTACHMENTS TO BWR VESSEL

ASME SEC. XI ITEM #	ITEM DESCRIPTION	EXAM METHOD	SYSTEM DESCRIPTION	ZONE	NUMBER OF COMPONENTS	RELIEF REQ.	# OF COMPONENTS SCHEDULED/COMPLETED 1ST PER	2ND PER	3RD PER
B13.50	REACTOR VESSEL (PWR)-INTERIOR ATTACHMENTS WITHIN BELTLINE REGION ***** NOTE :EXAMINE ALL WELDS EACH INTERVAL.	VISUAL VT-1	RCS RPV	1	0		0/0	0/0	0/0
B13.60	REACTOR VESSEL (PWR)-INTERIOR ATTACHMENTS BEYOND BELTLINE REGION ***** NOTE :EXAMINE ALL WELDS EACH INTERVAL.	VISUAL VT-3	RCS RPV	1	0		0/0	0/0	0/0

DATE: 08/25/87
REVISION: 1

ST. LUCIE NUCLEAR PLANT UNIT 1
INSERVICE INSPECTION PLAN FOR THE FIRST INTERVAL
CLASS 1 SECTION XI SUMMARY
TABLE A

CATEGORY B-N-3 - REMOVABLE CORE SUPPORT STRUCTURES IN BWR VESSEL

ASME SEC. XI ITEM #	ITEM DESCRIPTION	EXAM METHOD	SYSTEM DESCRIPTION	ZONE	NUMBER OF COMPONENTS	RELIEF REQ.	# OF COMPONENTS SCHEDULED/COMPLETED 1ST PER	2ND PER	3RD PER
B13.70A	REACTOR VESSEL (PWR)-CORE SUPPORT STRUCTURE ***** NOTE :EXAMINE SURFACES EACH INTERVAL.	VISUAL VT-3	RCS RPV	1	0		0/0	0/0	0/0
B13.70B	REACTOR VESSEL (PWR)-CORE BARREL ***** NOTE :EXAMINE 100% UPON REMOVAL FROM RPV	VISUAL VT-3	RCS RPV	1	0		0/0	0/0	0/0

CATEGORY B-O - PRESSURE RETAINING WELDS IN CONTROL ROD HOUSINGS

ASME SEC. XI ITEM #	ITEM DESCRIPTION	EXAM METHOD	SYSTEM DESCRIPTION	ZONE	NUMBER OF COMPONENTS	RELIEF REQ.	# OF COMPONENTS SCHEDULED/COMPLETED 1ST PER	2ND PER	3RD PER
B14.10	REACTOR VESSEL-WELDS IN CONTROL ROD DRIVE HOUSINGS	VOLUMETRIC SURFACE	RCS RPV-CLOSUR	2	12		0/0	0/0	1/0

***** NOTE :EXAMINE 10% OF PERIPHERAL HOUSINGS, END OF INTERVAL

CATEGORY B-P - ALL PRESSURE RETAINING COMPONENTS IN REACTOR VESSEL

ASME SEC. XI ITEM #	ITEM DESCRIPTION	EXAM METHOD	SYSTEM DESCRIPTION	ZONE	NUMBER OF COMPONENTS	RELIEF REQ.	# OF COMPONENTS SCHEDULED/COMPLETED 1ST PER	2ND PER	3RD PER
B15.10	REACTOR VESSEL-SYSTEM LEAKAGE TEST	VISUAL VT-2	ALL CLASS 1		1		1/0	1/0	1/0
	***** NOTE :EXAMINE ALL CLASS 1 COMPONENTS AND SYSTEMS. EACH REFUELING OUTAGE.								
B15.11	REACTOR VESSEL-SYSTEM HYDROSTATIC TEST	VISUAL VT-2	ALL CLASS 1		1		0/0	0/0	1/0
	***** NOTE :EXAMINE ALL CLASS 1 COMPONENTS AND SYSTEMS. ONE TEST AT OR NEAR END OF INTERVAL.								
B15.20	PRESSURIZER-SYSTEM LEAKAGE TEST	VISUAL VT-2	ALL CLASS 1		1		1/0	1/0	1/0
	***** NOTE :EXAMINE ALL CLASS 1 COMPONENTS AND SYSTEMS. EACH REFUELING OUTAGE.								
B15.21	PRESSURIZER-SYSTEM HYDROSTATIC TEST	VISUAL VT-2	ALL CLASS 1		1		0/0	0/0	1/0
	***** NOTE :EXAMINE ALL CLASS 1 COMPONENTS AND SYSTEMS. ONE TEST AT OR NEAR END OF INTERVAL.								
B15.30	STEAM GENERATORS-SYSTEM LEAKAGE TEST	VISUAL VT-2	ALL CLASS 1		2		2/0	2/0	2/0
	***** NOTE :EXAMINE ALL CLASS 1 COMPONENTS AND SYSTEMS. EACH REFUELING OUTAGE.								
B15.31	STEAM GENERATORS-SYSTEM HYDROSTATIC TEST	VISUAL VT-2	ALL CLASS 1		2		0/0	0/0	2/0
	***** NOTE :EXAMINE ALL CLASS 1 COMPONENTS AND SYSTEMS. ONE TEST AT OR NEAR END OF INTERVAL.								
B15.40	HEAT EXCHANGERS-SYSTEM LEAKAGE TEST	VISUAL VT-2	ALL CLASS 1		4		4/0	4/0	4/0
	***** NOTE :EXAMINE ALL CLASS 1 COMPONENTS AND SYSTEMS. EACH REFUELING OUTAGE.								
B15.41	HEAT EXCHANGERS-SYSTEM HYDROSTATIC TEST	VISUAL VT-2	ALL CLASS 1		4		0/0	0/0	4/0
	***** NOTE :EXAMINE ALL CLASS 1 COMPONENTS AND SYSTEMS. ONE TEST AT OR NEAR END OF INTERVAL.								
B15.50	PIPING-SYSTEM LEAKAGE TEST	VISUAL VT-2	ALL CLASS 1		4		4/0	4/0	4/0
	***** NOTE :EXAMINE ALL CLASS 1 COMPONENTS AND SYSTEMS. EACH REFUELING OUTAGE. :RCS, RC, CVCS, SI								
B15.51	PIPING-SYSTEM HYDROSTATIC TEST	VISUAL VT-2	ALL CLASS 1		4		0/0	0/0	4/0
	***** NOTE :EXAMINE ALL CLASS 1 COMPONENTS AND SYSTEMS. ONE TEST AT OR NEAR END OF INTERVAL. :RCS, RC, CVCS, SI								
B15.60	PUMPS-SYSTEM LEAKAGE TEST	VISUAL VT-2	ALL CLASS 1		4		4/0	4/0	4/0
	***** NOTE :EXAMINE ALL CLASS 1 COMPONENTS AND SYSTEMS. EACH REFUELING OUTAGE.								
B15.61	PUMPS-SYSTEM HYDROSTATIC TEST	VISUAL VT-2	ALL CLASS 1		4		0/0	0/0	4/0
	***** NOTE :EXAMINE ALL CLASS 1 COMPONENTS AND SYSTEMS. ONE TEST AT OR NEAR END OF INTERVAL.								

CATEGORY B-P - ALL PRESSURE RETAINING COMPONENTS IN REACTOR VESSEL

ASME SEC. XI ITEM #	ITEM DESCRIPTION	EXAM METHOD	SYSTEM DESCRIPTION	ZONE	NUMBER OF COMPONENTS	RELIEF REQ.	# OF COMPONENTS SCHEDULED/COMPLETED 1ST PER	2ND PER	3RD PER
B15.70	VALVES-SYSTEM LEAKAGE TEST	VISUAL VT-2	ALL CLASS 1		ALL		1/0	1/0	1/0
	***** NOTE :EXAMINE ALL CLASS 1 COMPONENTS AND SYSTEMS. EACH REFUELING OUTAGE.								
	:PART OF PIPING SYSTEM								
B15.71	VALVES-SYSTEM HYDROSTATIC TEST	VISUAL VT-2	ALL CLASS 1		ALL		0/0	0/0	1/0
	***** NOTE :EXAMINE ALL CLASS 1 COMPONENTS AND SYSTEMS. ONE TEST AT OR NEAR END OF INTERVAL.								
	:PART OF PIPING SYSTEM								

CATEGORY B-Q - STEAM GENERATOR TUBING

ASME SEC. XI ITEM #	ITEM DESCRIPTION	EXAM METHOD	SYSTEM DESCRIPTION	ZONE	NUMBER OF COMPONENTS	RELIEF REQ.	# OF COMPONENTS SCHEDULED/COMPLETED 1ST PER	2ND PER	3RD PER
B16.20	STEAM GENERATOR TUBING IN U -TUBE DESIGN ***** NOTE :EXAMINE PER TECH. SPEC. REQUIREMENTS.	VOLUMETRIC	RCS SG-1A	3	0		0/0	0/0	0/0
B16.20	STEAM GENERATOR TUBING IN U -TUBE DESIGN ***** NOTE :EXAMINE PER TECH. SPEC. REQUIREMENTS.	VOLUMETRIC	RCS SG-1B	4	0		0/0	0/0	0/0

APPENDIX B

CLASS 2 EXAMINATION SUMMARY TABLES

ST. LUCIE NUCLEAR PLANT UNIT 1
INSERVICE INSPECTION PLAN FOR THE FIRST INTERVAL
CLASS 2 SECTION XI SUMMARY
TABLE B

CATEGORY C-A - PRESSURE RETAINING WELDS IN PRESSURE VESSELS

ASME SEC. XI ITEM #	ITEM DESCRIPTION	EXAM METHOD	SYSTEM DESCRIPTION	ZONE	NUMBER OF COMPONENTS	RELIEF REQ.	# OF COMPONENTS SCHEDULED/COMPLETED 1ST PER	2ND PER	3RD PER
C1.10	SHELL CIRCUMFERENTIAL WELDS	VOLUMETRIC	MSS S/G 1A	41	3		0/0	0/0	0/0
C1.10	SHELL CIRCUMFERENTIAL WELDS	VOLUMETRIC	MSS S/G 1B	42	3		1/0	1/0	1/0
C1.20	HEAD CIRCUMFERENTIAL WELDS	VOLUMETRIC	MSS S/G 1A	41	2		0/0	0/0	0/0
C1.20	HEAD CIRCUMFERENTIAL WELDS	VOLUMETRIC	MSS S/G 1B	42	2		0/0	1/0	0/0
C1.20	HEAD CIRCUMFERENTIAL WELDS	VOLUMETRIC	MSS SHE 1A	55	1		0/0	1/0	0/0
C1.20	HEAD CIRCUMFERENTIAL WELDS	VOLUMETRIC	MSS SHE 1B	56	1		0/0	0/0	0/0
C1.30	TUBESHEET-TO-SHELL WELDS	VOLUMETRIC	MSS S/G 1A	41	1		1/0	0/0	0/0
C1.30	TUBESHEET-TO-SHELL WELDS	VOLUMETRIC	MSS S/G 1B	42	1		0/0	0/0	0/0
C1.30	TUBESHEET-TO-SHELL WELDS	VOLUMETRIC	SI SHE 1A	55	1		0/0	0/0	0/0
C1.30	TUBESHEET-TO-SHELL WELDS	VOLUMETRIC	SI SHE 1B	56	1		0/0	0/0	1/0

CATEGORY C-B - PRESSURE RETAINING NOZZLE WELDS IN VESSELS

ASME SEC. XI ITEM #	ITEM DESCRIPTION	EXAM METHOD	SYSTEM DESCRIPTION	ZONE	NUMBER OF COMPONENTS	RELIEF REQ.	# OF COMPONENTS SCHEDULED/COMPLETED 1ST PER	2ND PER	3RD PER
C2.10	NOZZLES IN VESSELS <= 1/2 IN. NOMINAL THICKNESS		MSS, FW, SI, N/A		0		0/0	0/0	0/0
C2.11	NOZZLE-TO-SHELL (OR HEAD) WELD	SURFACE	MSS, FW, SI		0		0/0	0/0	0/0
C2.21	NOZZLE-TO-SHELL (OR HEAD) WELD	SURFACE VOLUMETRIC	S/G 1A	41	2		1/0	1/0	0/0
C2.21	NOZZLE-TO-SHELL (OR HEAD) WELD	SURFACE VOLUMETRIC	S/G 1B	42	2		0/0	0/0	2/0
C2.21	NOZZLE-TO-SHELL (OR HEAD) WELD	SURFACE VOLUMETRIC	SI SHE 1A	55	2		0/0	0/0	0/0
C2.21	NOZZLE-TO-SHELL (OR HEAD) WELD	SURFACE VOLUMETRIC	SI SHE 1B	56	2		0/0	0/0	0/0
C2.22	NOZZLE INSIDE RADIUS SECTION	VOLUMETRIC	S/G 1A	41	2		1/0	1/0	0/0
C2.22	NOZZLE INSIDE RADIUS SECTION	VOLUMETRIC	S/G 1B	42	2		0/0	0/0	2/0
C2.22	NOZZLE INSIDE RADIUS SECTION	VOLUMETRIC	SI SHE 1A	55	2		0/0	0/0	0/0
C2.22	NOZZLE INSIDE RADIUS SECTION	VOLUMETRIC	SI SHE 1B	56	2		0/0	0/0	0/0
C2.30	NOZZLES WITH REINFORCING PLATE IN VESSELS > 1/2 IN. NOMINAL THICKNESS		N/A		0		0/0	0/0	0/0
C2.31	REINFORCING PLATE WELDS TO NOZZLE AND VESSEL	SURFACE	N/A		0		0/0	0/0	0/0
C2.32	NOZZLE-TO-SHELL (OR HEAD) WELDS WHEN INSIDE OF VESSEL IS ACCESSIBLE	VOLUMETRIC	N/A		0		0/0	0/0	0/0
C2.33	NOZZLE-TO-SHELL (OR HEAD) WELDS WHEN INSIDE OF WELD IS INACCESSIBLE	VISUAL VT-2	N/A		0		0/0	0/0	0/0

CATEGORY C-C - INTEGRAL ATTACHMENTS FOR PRESSURE VESSELS

ASME SEC. XI ITEM #	ITEM DESCRIPTION	EXAM METHOD	SYSTEM DESCRIPTION	ZONE	NUMBER OF COMPONENTS	RELIEF REQ.	# OF COMPONENTS SCHEDULED/COMPLETED 1ST PER	2ND PER	3RD PER
C3.10	PRESSURE VESSELS-INTEGRALLY WELDED ATTACHMENTS	SURFACE	S/G 1A	41	8		2/0	0/0	2/0
C3.10	PRESSURE VESSELS-INTEGRALLY WELDED ATTACHMENTS	SURFACE	S/G 1B	42	8		0/0	2/0	2/0
C3.20	PIPING-INTEGRALLY WELDED ATTACHMENTS	SURFACE	MSS	63	4		0/0	2/0	2/0
C3.20	PIPING-INTEGRALLY WELDED ATTACHMENTS	SURFACE	MSS	64	5		0/0	5/0	0/0
C3.20	PIPING-INTEGRALLY WELDED ATTACHMENTS	SURFACE	MSS	65	0		0/0	0/0	0/0
C3.20	PIPING-INTEGRALLY WELDED ATTACHMENTS	SURFACE	MSS	66	0		0/0	0/0	0/0
C3.20	PIPING-INTEGRALLY WELDED ATTACHMENTS	SURFACE	FW	67	1		1/0	0/0	0/0
C3.20	PIPING-INTEGRALLY WELDED ATTACHMENTS	SURFACE	FW	68	1		1/0	0/0	0/0
C3.20	PIPING-INTEGRALLY WELDED ATTACHMENTS	SURFACE	FW	71	1		0/0	1/0	0/0
C3.20	PIPING-INTEGRALLY WELDED ATTACHMENTS	SURFACE	FW	72	0		0/0	0/0	0/0
C3.30	PUMPS-INTEGRALLY WELDED ATTACHMENTS	SURFACE	SI LPSI PUMPS		2		0/0	1/0	1/0
C3.30	PUMPS-INTEGRALLY WELDED ATTACHMENTS	SURFACE	SI HPSI PUMPS		3		1/0	1/0	1/0
C3.30	PUMPS-INTEGRALLY WELDED ATTACHMENTS	SURFACE	SI CHARGING PUMPS		3		1/0	1/0	1/0
C3.40	VALVES-INTEGRALLY WELDED ATTACHMENTS	SURFACE	ALL N/A		0		0/0	0/0	0/0

CATEGORY C-D - PRESSURE RETAINING BOLTING GREATER THAN 2 INCHES IN DIAMETER IN PRESSURE VESSELS

ASME SEC. XI ITEM #	ITEM DESCRIPTION	EXAM METHOD	SYSTEM DESCRIPTION	ZONE	NUMBER OF COMPONENTS	RELIEF REQ.	# OF COMPONENTS SCHEDULED/COMPLETED 1ST PER	2ND PER	3RD PER
C4.10	PRESSURE VESSELS-BOLTS AND STUDS	VOLUMETRIC	ALL N/A		0		0/0	0/0	0/0
C4.20	PIPING-BOLTS AND STUDS	VOLUMETRIC	ALL N/A		0		0/0	0/0	0/0
C4.30	PUMPS-BOLTS AND STUDS	VOLUMETRIC	ALL N/A		0		0/0	0/0	0/0
C4.40	VALVES-BOLTS AND STUDS	VOLUMETRIC	ALL N/A		0		0/0	0/0	0/0

CATEGORY C-F-1 - CODE CASE N-408 TABLES

ASME SEC. XI ITEM #	ITEM DESCRIPTION	EXAM METHOD	SYSTEM DESCRIPTION	ZONE	NUMBER OF COMPONENTS	RELIEF REQ.	# OF COMPONENTS SCHEDULED/COMPLETED 1ST PER.	2ND PER	3RD PER
C5.11	CIRCUMFERENTIAL WELDS	SURFACE VOLUMETRIC	SI 6"	44	12		4/0	4/0	4/0
	***** NOTE :# OF COMPONENTS: NECESSARY TO MEET 7.5% OF SI WELDS PER C-F-1.								
C5.11	CIRCUMFERENTIAL WELDS	SURFACE VOLUMETRIC	HPSI 6"	61	22		3/0	3/0	4/0
	***** NOTE :# OF COMPONENTS: NECESSARY TO MEET 7.5% OF SI WELDS PER C-F-1.								
C5.11	CIRCUMFERENTIAL WELDS	SURFACE VOLUMETRIC	HPSI 6"	62	25		3/0	3/0	4/0
	***** NOTE :# OF COMPONENTS: NECESSARY TO MEET 7.5% OF SI WELDS PER C-F-1.								
C5.12	LONGITUDINAL WELDS	SURFACE VOLUMETRIC			0		0/0	0/0	0/0
C5.21	CIRCUMFERENTIAL WELDS	UT-PT	HPSI 3"	61	5		1/0	1/0	0/0
C5.21	CIRCUMFERENTIAL WELDS	UT-PT	HPSI 4"	62	13		0/0	1/0	1/0
C5.21	CIRCUMFERENTIAL WELDS	UT-PT	HPSI 3"	62	34		1/0	0/0	3/0
C5.22	LONGITUDINAL WELDS	UT-PT	HPSI		0		0/0	0/0	0/0
C5.30	SOCKET WELDS	PT	HPSI 2"	83	30		4/0	0/0	0/0
C5.30	SOCKET WELDS	PT	HPSI 2"	87	156		8/0	4/0	8/0
C5.30	SOCKET WELDS	PT	HPSI 2"	84	29		0/0	4/0	0/0
C5.30	SOCKET WELDS	PT	HPSI 2"	85	35		0/0	0/0	5/0
C5.30	SOCKET WELDS	PT	HPSI 2"	86	39		0/0	5/0	0/0
C5.41	BRANCH CONNECTORS >= 2" NPS - CIRCUMFERENTIAL WELDS	PT	HPSI 2"	61	6		0/0	1/0	0/0
C5.41	BRANCH CONNECTORS >= 2" NPS - CIRCUMFERENTIAL WELDS	PT	HPSI 2"	62	6		1/0	0/0	0/0
C5.42	BRANCH CONNECTORS >= 2" NPS - PT LONGITUDINAL WELDS	PT	HPSI NONE		0		0/0	0/0	0/0
C5.43	WELDS T < .375" - EXEMPT - N -408		SI 12"	43	71		0/0	0/0	0/0

CATEGORY C-F-1 - CODE CASE N-408 TABLES

ASME SEC. XI ITEM #	ITEM DESCRIPTION	EXAM METHOD	SYSTEM DESCRIPTION	ZONE	NUMBER OF COMPONENTS	RELIEF REQ.	# OF COMPONENTS SCHEDULED/COMPLETED 1ST PER	2ND PER	3RD PER
C5.43	WELDS T < .375" - EXEMPT - N -408		SI 10"	43	27		0/0	0/0	0/0
C5.43	WELDS T < .375" - EXEMPT - N -408		SI 12"	44	22		0/0	0/0	0/0
C5.43	WELDS T < .375" - EXEMPT - N -408		SI 6"	44	27		0/0	0/0	0/0
C5.44	CIRCUMFERENTIAL WELDS - EXEMPT - N-408		SD CLG. 10"	49	23		0/0	0/0	0/0
C5.44	CIRCUMFERENTIAL WELDS - EXEMPT - N-408		SD CLG. 10"	50	35		0/0	0/0	0/0
C5.44	CIRCUMFERENTIAL WELDS - EXEMPT - N-408		SD CLG. 10"	51	30		0/0	0/0	0/0
C5.44	CIRCUMFERENTIAL WELDS - EXEMPT - N-408		SD CLG. 10"	52	20		0/0	0/0	0/0
C5.44	CIRCUMFERENTIAL WELDS - EXEMPT - N-408		SD CLG. 24"	70	61		0/0	0/0	0/0
C5.44	CIRCUMFERENTIAL WELDS - EXEMPT - N-408		HPSI,LPSI,SUCTION 24"	73	18		0/0	0/0	0/0
C5.44	CIRCUMFERENTIAL WELDS - EXEMPT - N-408		HPSI,LPSI,SUCTION 14"	73	30		0/0	0/0	0/0
C5.44	CIRCUMFERENTIAL WELDS - EXEMPT - N-408		HPSI,LPSI,SUCTION 6"	73	16		0/0	0/0	0/0
C5.44	CIRCUMFERENTIAL WELDS - EXEMPT - N-408		HPSI,LPSI,SUCTION 24"	74	30		0/0	0/0	0/0
C5.44	CIRCUMFERENTIAL WELDS - EXEMPT - N-408		HPSI,LPSI,SUCTION 14"	74	29		0/0	0/0	0/0
C5.44	CIRCUMFERENTIAL WELDS - EXEMPT - N-408		HPSI,LPSI,SUCTION 8"	74	12		0/0	0/0	0/0
C5.44	CIRCUMFERENTIAL WELDS - EXEMPT - N-408		HPSI,LPSI,SUCTION 6"	74	22		0/0	0/0	0/0

CATEGORY C-F-1 - CODE CASE N-408 TABLES

ASME SEC. XI ITEM #	ITEM DESCRIPTION	EXAM METHOD	SYSTEM DESCRIPTION	ZONE	NUMBER OF COMPONENTS	RELIEF REQ.	# OF COMPONENTS SCHEDULED/COMPLETED 1ST PER	2ND PER	3RD PER
C5.44	CIRCUMFERENTIAL WELDS - EXEMPT - N-408		SD CLG., SI, C.S. 10"	75	7		0/0	0/0	0/0
C5.44	CIRCUMFERENTIAL WELDS - EXEMPT - N-408		SD CLG., SI, C.S. 12"	76	19		0/0	0/0	0/0
C5.44	CIRCUMFERENTIAL WELDS - EXEMPT - N-408		SD CLG., SI, C.S. 12"	77	8		0/0	0/0	0/0
C5.44	CIRCUMFERENTIAL WELDS - EXEMPT - N-408		SD CLG., SI, C.S. 10"	77	6		0/0	0/0	0/0
C5.44	CIRCUMFERENTIAL WELDS - EXEMPT - N-408		SD CLG., SI, C.S. 6"	77	2		0/0	0/0	0/0
C5.44	CIRCUMFERENTIAL WELDS - EXEMPT - N-408		SD CLG., SI, C.S. 12"	78	19		0/0	0/0	0/0
C5.44	CIRCUMFERENTIAL WELDS - EXEMPT - N-408		SD CLG., SI, C.S. 8"	78	1		0/0	0/0	0/0
C5.44	CIRCUMFERENTIAL WELDS - EXEMPT - N-408		C.S. 12"	79	38		0/0	0/0	0/0
C5.44	CIRCUMFERENTIAL WELDS - EXEMPT - N-408		C.S. 12"	80	34		0/0	0/0	0/0

***** EXEMPT CIRCUMFERENTIAL WELD SUMMARY *****

24" - 109
14" - 59
12" - 211
10" - 148
8" - 13
6" - 67

TOTAL - 607

CATEGORY C-F-2 - CODE CASE N-408

ASME SEC. XI ITEM #	ITEM DESCRIPTION	EXAM METHOD	SYSTEM DESCRIPTION	ZONE	NUMBER OF COMPONENTS	RELIEF REQ.	# OF COMPONENTS SCHEDULED/COMPLETED 1ST PER	2ND PER	3RD PER
C5.51	PIPING >= 3/8T; 4 NPS - CIRCUMFERENTIAL WELDS	MT PT	MSS 36"	63	3		1/0	0/0	0/0
C5.51	PIPING >= 3/8T; 4 NPS - CIRCUMFERENTIAL WELDS	MT PT	MSS 34"	63	12		0/0	2/0	0/0
C5.51	PIPING >= 3/8T; 4 NPS - CIRCUMFERENTIAL WELDS	MT PT	MSS 36"	64	3		0/0	0/0	1/0
C5.51	PIPING >= 3/8T; 4 NPS - CIRCUMFERENTIAL WELDS	MT PT	MSS 34"	64	14		0/0	2/0	0/0
C5.51	PIPING >= 3/8T; 4 NPS - CIRCUMFERENTIAL WELDS	MT PT	MSS 35.5"	65	4		1/0	1/0	0/0
C5.51	PIPING >= 3/8T; 4 NPS - CIRCUMFERENTIAL WELDS	MT PT	MSS 34"	65	1		0/0	0/0	0/0
C5.51	PIPING >= 3/8T; 4 NPS - CIRCUMFERENTIAL WELDS	MT PT	MSS 8"	65	2		1/0	0/0	0/0
C5.51	PIPING >= 3/8T; 4 NPS - CIRCUMFERENTIAL WELDS	MT PT	MSS 6"	65	8		1/0	0/0	0/0
C5.51	PIPING >= 3/8T; 4 NPS - CIRCUMFERENTIAL WELDS	MT PT	MSS 35.5"	66	5		0/0	0/0	2/0
C5.51	PIPING >= 3/8T; 4 NPS - CIRCUMFERENTIAL WELDS	MT PT	MSS 34"	66	1		0/0	0/0	1/0
C5.51	PIPING >= 3/8T; 4 NPS - CIRCUMFERENTIAL WELDS	MT PT	MSS 8"	66	2		0/0	0/0	0/0
C5.51	PIPING >= 3/8T; 4 NPS - CIRCUMFERENTIAL WELDS	MT PT	MSS 6"	66	8		0/0	0/0	1/0
C5.51	PIPING >= 3/8T; 4 NPS - CIRCUMFERENTIAL WELDS	MT UT	BF 20"	67	7		1/0	0/0	0/0
C5.51	PIPING >= 3/8T; 4 NPS - CIRCUMFERENTIAL WELDS	MT UT	BF 18"	67	6		1/0	1/0	0/0
C5.51	PIPING >= 3/8T; 4 NPS - CIRCUMFERENTIAL WELDS	MT UT	BF 20"	68	10		0/0	0/0	2/0

CATEGORY C-F-2 - CODE CASE N-408

ASME SEC. XI ITEM #	ITEM DESCRIPTION	EXAM METHOD	SYSTEM DESCRIPTION	ZONE	NUMBER OF COMPONENTS	RELIEF REQ.	# OF COMPONENTS SCHEDULED/COMPLETED 1ST PER	2ND PER	3RD PER
C5.51	PIPING >= 3/8T; 4 NPS - CIRCUMFERENTIAL WELDS	MT UT	BF 18"	68	5		1/0	0/0	0/0
C5.51	PIPING >= 3/8T; 4 NPS - CIRCUMFERENTIAL WELDS	MT UT	BF 20"	71	5		0/0	2/0	0/0
C5.51	PIPING >= 3/8T; 4 NPS - CIRCUMFERENTIAL WELDS	MT UT	BF 20"	72	5		0/0	0/0	2/0
C5.52	PIPING >= 3/8T; 4 NPS - LONGITUDINAL WELDS	MT UT	MSS 36"	63	4		2/0	0/0	0/0
C5.52	PIPING >= 3/8T; 4 NPS - LONGITUDINAL WELDS	MT UT	MSS 34"	63	24		0/0	4/0	0/0
C5.52	PIPING >= 3/8T; 4 NPS - LONGITUDINAL WELDS	MT UT	MSS 36"	64	4		0/0	0/0	2/0
C5.52	PIPING >= 3/8T; 4 NPS - LONGITUDINAL WELDS	MT UT	MSS 34"	64	28		0/0	4/0	0/0
C5.52	PIPING >= 3/8T; 4 NPS - LONGITUDINAL WELDS	MT UT	MSS 35.5"	65	2		1/0	1/0	0/0
C5.52	PIPING >= 3/8T; 4 NPS - LONGITUDINAL WELDS	MT UT	MSS 34"	65	1		0/0	0/0	0/0
C5.52	PIPING >= 3/8T; 4 NPS - LONGITUDINAL WELDS	MT UT	MSS 35.5"	66	3		0/0	0/0	2/0
C5.52	PIPING >= 3/8T; 4 NPS - LONGITUDINAL WELDS	MT UT	MSS 34"	66	1		0/0	0/0	1/0
C5.70	SOCKET WELDS > 4"	MT	MSS, BF		0		0/0	0/0	0/0
C5.81	BRANCH PIPE CONNECTIONS > 2" NPS - CIRCUMFERENTIAL WELDS	MT	MSS 6"	65	8		1/0	0/0	0/0
C5.81	BRANCH PIPE CONNECTIONS > 2" NPS - CIRCUMFERENTIAL WELDS	MT	MSS 8"	65	1		1/0	0/0	0/0
C5.81	BRANCH PIPE CONNECTIONS > 2" NPS - CIRCUMFERENTIAL WELDS	MT	MSS 4"	65	1		1/0	0/0	0/0

ST. LUCIE NUCLEAR PLANT UNIT 1
INSERVICE INSPECTION PLAN FOR THE FIRST INTERVAL
CLASS 2 SECTION XI SUMMARY
TABLE B

CATEGORY C-F-2 - CODE CASE N-408

ASME SEC. XI ITEM #	ITEM DESCRIPTION	EXAM METHOD	SYSTEM DESCRIPTION	ZONE	NUMBER OF COMPONENTS	RELIEF REQ.	# OF COMPONENTS SCHEDULED/COMPLETED 1ST PER	2ND PER	3RD PER
C5.81	BRANCH PIPE CONNECTIONS > 2" NPS - CIRCUMFERENTIAL WELDS	MT	MSS 6"	66	8		0/0	0/0	1/0
C5.81	BRANCH PIPE CONNECTIONS > 2" NPS - CIRCUMFERENTIAL WELDS	MT	MSS 8"	66	1		0/0	0/0	1/0
C5.81	BRANCH PIPE CONNECTIONS > 2" NPS - CIRCUMFERENTIAL WELDS	MT	MSS 4"	66	1		0/0	0/0	0/0
C5.81	BRANCH PIPE CONNECTIONS > 2" NPS - CIRCUMFERENTIAL WELDS	MT	BF 4"	71	2		0/0	1/0	0/0
C5.81	BRANCH PIPE CONNECTIONS > 2" NPS - CIRCUMFERENTIAL WELDS	MT	BF 4"	72	2		0/0	0/0	0/0
C5.82	BRANCH PIPE CONNECTIONS > 2" NPS - LONGITUDINAL WELDS	MT	MSS, BF, N/A		0		0/0	0/0	0/0

CATEGORY C-G - PRESSURE RETAINING WELDS IN PUMPS AND VALVES

ASME SEC. XI ITEM #	ITEM DESCRIPTION	EXAM METHOD	SYSTEM DESCRIPTION	ZONE	NUMBER OF COMPONENTS	RELIEF REQ.	# OF COMPONENTS SCHEDULED/COMPLETED 1ST PER	2ND PER	3RD PER
C6.10	PUMPS-PUMP CASING WELDS	SURFACE	ALL N/A		0		0/0	0/0	0/0
C6.20	VALVES-VALVE BODY WELDS	SURFACE	ALL N/A		0		0/0	0/0	0/0

CATEGORY C-H - ALL PRESSURE RETAINING COMPONENTS IN PRESSURE VESSELS

ASME SEC. XI ITEM #	ITEM DESCRIPTION	EXAM METHOD	SYSTEM DESCRIPTION	ZONE	NUMBER OF COMPONENTS	RELIEF REQ.	# OF COMPONENTS SCHEDULED/COMPLETED 1ST PER	2ND PER	3RD PER
C7.10	PRESSURE VESSELS-SYSTEM PRESSURE TEST	VISUAL VT-2	ALL CLASS 2 PER COLOR CODED P&ID'S		12		12/0	12/0	12/0
	***** NOTE :# OF COMPONENTS: EXAMINE ALL CLASS 2 COMPONENTS AND SYSTEMS EACH PERIOD. :S/G, RHX, BAT, NDDHST, SCHX								
C7.20	PRESSURE VESSELS-SYSTEM HYDROSTATIC TEST	VISUAL VT-2	ALL CLASS 2 PER COLOR CODED P&ID'S		12		0/0	0/0	12/0
	***** NOTE :# OF COMPONENTS: EXAMINE ALL CLASS 2 COMPONENTS AND SYSTEMS EACH INTERVAL.								
C7.30	PIPING-SYSTEM PRESSURE TEST	VISUAL VT-2	ALL CLASS 2 PER COLOR CODED P&ID'S		12		12/0	12/0	12/0
	***** NOTE :# OF COMPONENTS: EXAMINE ALL CLASS 2 COMPONENTS AND SYSTEMS EACH PERIOD. :CCW, MS, FW, BD, CS, AFW, RC, CVCS, CS, RFW, SI, SCS								
C7.40	PIPING-SYSTEM HYDROSTATIC TEST	VISUAL VT-2	ALL CLASS 2 PER COLOR CODED P&ID'S		12		0/0	0/0	12/0
	***** NOTE :# OF COMPONENTS: EXAMINE ALL CLASS 2 COMPONENTS AND SYSTEMS EACH INTERVAL.								
C7.50	PUMPS-SYSTEM PRESSURE TEST	VISUAL VT-2	ALL CLASS 2 PER COLOR CODED P&ID'S		12		12/0	12/0	12/0
	***** NOTE :# OF COMPONENTS: EXAMINE ALL CLASS 2 COMPONENTS AND SYSTEMS EACH PERIOD. :BAP, CHP, CSP, LPSI, HPSI								
C7.60	PUMPS-SYSTEM HYDROSTATIC TEST	VISUAL VT-2	ALL CLASS 2 PER COLOR CODED P&ID'S		12		0/0	0/0	12/0
	***** NOTE :# OF COMPONENTS: EXAMINE ALL CLASS 2 COMPONENTS AND SYSTEMS EACH INTERVAL.								
C7.70	VALVES-SYSTEM PRESSURE TEST	VISUAL VT-2	ALL CLASS 2 PER COLOR CODED P&ID'S		1		1/0	1/0	1/0
	***** NOTE :# OF COMPONENTS: EXAMINE ALL CLASS 2 COMPONENTS AND SYSTEMS EACH PERIOD.								
C7.80	VALVES-SYSTEM HYDROSTATIC TEST	VISUAL VT-2	ALL CLASS 2 PER COLOR CODED P&ID'S		1		0/0	0/0	1/0
	***** NOTE :# OF COMPONENTS: EXAMINE ALL CLASS 2 COMPONENTS AND SYSTEMS EACH INTERVAL. :PART OF PIPING SYSTEM								

APPENDIX C

CLASS 3 EXAMINATION SUMMARY TABLES

ST. LUCIE NUCLEAR PLANT UNIT 1
INSERVICE INSPECTION PLAN FOR THE FIRST INTERVAL
CLASS 3 SECTION XI SUMMARY
TABLE C

CATEGORY D-A - SYSTEMS IN SUPPORT OF REACTOR SHUTDOWN FUNCTION

ASME SEC. XI ITEM #	ITEM DESCRIPTION	EXAM METHOD	SYSTEM DESCRIPTION	ZONE	NUMBER OF COMPONENTS	RELIEF REQ.	# OF COMPONENTS SCHEDULED/COMPLETED 1ST PER	2ND PER	3RD PER
D1.10A	SYSTEM PRESSURE TEST ***** NOTE :ALL COMPONENTS TO BE EXAMINED EACH PERIOD.	VT-2	ALL CLASS 3 BOUNDARY		1		1/0	1/0	1/0
D1.10B	SYSTEM HYDROSTATIC TEST ***** NOTE :ALL COMPONENTS TO BE EXAMINED EACH INTERVAL	VT-2	ALL CLASS 3 BOUNDARY		1		0/0	0/0	1/0
D1.20	INTEGRAL ATTACHMENT-COMPONENT SUPPORTS AND RESTRAINTS	VT-3	AFW	113	2		1/0	1/0	0/0
D1.20	INTEGRAL ATTACHMENT-COMPONENT SUPPORTS AND RESTRAINTS	VT-3	CONDENSATE	118	3		1/0	1/0	1/0
D1.20	INTEGRAL ATTACHMENT-COMPONENT SUPPORTS AND RESTRAINTS	VT-3	CONDENSATE	119	2		0/0	1/0	1/0
D1.30	INTEGRAL ATTACHMENT-MECHANICAL AND HYDRAULIC SNUBBERS	VT-3	N/A		0		0/0	0/0	0/0
D1.40	INTEGRAL ATTACHMENT-SPRING TYPE SUPPORTS	VT-3	N/A		0		0/0	0/0	0/0
D1.50	INTEGRAL ATTACHMENT-CONSTANT LOAD TYPE SUPPORTS	VT-3	CONDENSATE	120	1		0/0	1/0	0/0
D1.60	INTEGRAL ATTACHMENT-SHOCK ABSORBERS	VT-3	N/A		0		0/0	0/0	0/0

ST. LUCIE NUCLEAR PLANT UNIT 1
INSERVICE INSPECTION PLAN FOR THE FIRST INTERVAL
CLASS 3 SECTION XI SUMMARY
TABLE C

CATEGORY D-B - SYSTEMS IN SUPPORT OF EMERGENCY CORE COOLING, CONTAINMENT HEAT REMOVAL, ATMOSPHERE CLEANUP

ASME SEC. XI ITEM #	ITEM DESCRIPTION	EXAM METHOD	SYSTEM DESCRIPTION	ZONE	NUMBER OF COMPONENTS	RELIEF REQ.	# OF COMPONENTS SCHEDULED/COMPLETED 1ST PER	2ND PER	3RD PER
D2.10A	SYSTEM PRESSURE TEST ***** NOTE :ALL COMPONENTS TO BE EXAMINED EACH PERIOD.	VT-2	ALL CLASS 3 BOUNDARY		1		1/0	1/0	1/0
D2.10B	SYSTEM HYDROSTATIC TEST ***** NOTE :ALL COMPONENTS TO BE EXAMINED EACH INTERVAL	VT-2	ALL CLASS 3 BOUNDARY		1		0/0	0/0	1/0
D3.10A	SYSTEM PRESSURE TEST	VT-3	CC	101	1		0/0	0/0	1/0
D3.10B	SYSTEM HYDROSTATIC TEST	VT-3	CW	110	18		6/0	6/0	6/0
D3.20	INTEGRAL ATTACHMENT-COMPONENT SUPPORTS AND RESTRAINTS.	VT-3	N/A		0		0/0	0/0	0/0
D3.30	INTEGRAL ATTACHMENT-MECHANICAL AND HYDRAULIC SNUBBERS	VT-3	CC	100	3		1/0	1/0	1/0
D3.30	INTEGRAL ATTACHMENT-MECHANICAL AND HYDRAULIC SNUBBERS	VT-3	CC	105	3		1/0	1/0	1/0
D3.40	INTEGRAL ATTACHMENT-SPRING TYPE SUPPORTS	VT-3	N/A		0		0/0	0/0	0/0
D3.50	INTEGRAL ATTACHMENT-CONSTANT LOAD TYPE SUPPORTS	VT-3	N/A		0		0/0	0/0	0/0

CATEGORY D-C - SYSTEMS IN SUPPORT OF RESIDUAL HEAT REMOVAL FROM SPENT FUEL STORAGE POOL

ASME SEC. XI ITEM #	ITEM DESCRIPTION	EXAM METHOD	SYSTEM DESCRIPTION	ZONE	NUMBER OF COMPONENTS	RELIEF REQ.	# OF COMPONENTS SCHEDULED/COMPLETED 1ST PER	2ND PER	3RD PER
D3.10A	SYSTEM PRESSURE TEST ***** NOTE :ALL COMPONENTS TO BE EXAMINED EACH PERIOD.	VT-2	ALL CLASS 3 BOUNDARY		1		1/0	1/0	1/0
D3.10B	SYSTEM HYDROSTATIC TEST ***** NOTE :ALL COMPONENTS TO BE EXAMINED EACH INTERVAL	VT-2	ALL CLASS 3 BOUNDARY		1		0/0	0/0	1/0
D3.20	INTEGRAL ATTACHMENT-COMPONENT SUPPORTS AND RESTRAINTS	VT-3	N/A		0		0/0	0/0	0/0
D3.30	INTEGRAL ATTACHMENT-MECHANICAL AND HYDRAULIC SNUBBERS	VT-3	N/A		0		0/0	0/0	0/0
D3.40	INTEGRAL ATTACHMENT-SPRING TYPE SUPPORTS	VT-3	N/A		0		0/0	0/0	0/0
D3.50	INTEGRAL ATTACHMENT-CONSTANT LOAD TYPE SUPPORTS	VT-3	N/A		0		0/0	0/0	0/0
D3.60	INTEGRAL ATTACHMENT-SHOCK ABSORBERS	VT-3	N/A		0		0/0	0/0	0/0

APPENDIX D

CLASS 1 HANGER SUMMARY TABLES

ST. LUCIE NUCLEAR PLANT UNIT 1
INSERVICE INSPECTION PLAN FOR THE FIRST INTERVAL
CLASS 1 SECTION XI SUMMARY
TABLE D

CATEGORY F-A - PLATE AND SHELL TYPE SUPPORTS

ASME SEC. XI ITEM #	ITEM DESCRIPTION	EXAM METHOD	SYSTEM DESCRIPTION	ZONE	NUMBER OF COMPONENTS	RELIEF REQ.	# OF COMPONENTS SCHEDULED/COMPLETED 1ST PER	2ND PER	3RD PER
F1.10	MECHANICAL CONNECTIONS TO PRESSURE RETAINING COMPONENTS AND BUILDING STRUCTURE	VT-3	RCS		0		0/0	0/0	0/0

ST. LUCIE NUCLEAR PLANT UNIT 1
INSERVICE INSPECTION PLAN FOR THE FIRST INTERVAL
CLASS 1 SECTION XI SUMMARY
TABLE D

CATEGORY F-B - LINEAR TYPE SUPPORTS

ASME SEC. XI ITEM #	ITEM DESCRIPTION	EXAM METHOD	SYSTEM DESCRIPTION	ZONE	NUMBER OF COMPONENTS	RELIEF REQ.	# OF COMPONENTS SCHEDULED/COMPLETED 1ST PER	2ND PER	3RD PER
F2.10	MECHANICAL CONNECTIONS TO PRESSURE RETAINING COMPONENTS AND BUILDING STRUCTURE	VT-3	SI	21	12		1/0	1/0	1/0
F2.10	MECHANICAL CONNECTIONS TO PRESSURE RETAINING COMPONENTS AND BUILDING STRUCTURE	VT-3	SI	22	11		1/0	1/0	1/0
F2.10	MECHANICAL CONNECTIONS TO PRESSURE RETAINING COMPONENTS AND BUILDING STRUCTURE	VT-3	SI	23	5		1/0	0/0	0/0
F2.10	MECHANICAL CONNECTIONS TO PRESSURE RETAINING COMPONENTS AND BUILDING STRUCTURE	VT-3	SI	24	4		0/0	1/0	0/0
F2.10	MECHANICAL CONNECTIONS TO PRESSURE RETAINING COMPONENTS AND BUILDING STRUCTURE	VT-3	RCS	25	1		0/0	0/0	0/0
F2.10	MECHANICAL CONNECTIONS TO PRESSURE RETAINING COMPONENTS AND BUILDING STRUCTURE	VT-3	RCS	26	12		1/0	1/0	1/0
F2.10	MECHANICAL CONNECTIONS TO PRESSURE RETAINING COMPONENTS AND BUILDING STRUCTURE	VT-3	RCS	27	10		1/0	1/0	1/0
F2.10	MECHANICAL CONNECTIONS TO PRESSURE RETAINING COMPONENTS AND BUILDING STRUCTURE	VT-3	RCS	28	2		0/0	0/0	1/0
F2.10	MECHANICAL CONNECTIONS TO PRESSURE RETAINING COMPONENTS AND BUILDING STRUCTURE	VT-3	RCS	30	4		1/0	0/0	0/0
F2.10	MECHANICAL CONNECTIONS TO PRESSURE RETAINING COMPONENTS AND BUILDING STRUCTURE	VT-3	CH	31	1		0/0	1/0	0/0
F2.10	MECHANICAL CONNECTIONS TO PRESSURE RETAINING COMPONENTS AND BUILDING STRUCTURE	VT-3	CH	32	6		0/0	0/0	1/0

ST. LUCIE NUCLEAR PLANT UNIT 1
INSERVICE INSPECTION PLAN FOR THE FIRST INTERVAL
CLASS 1 SECTION XI SUMMARY
TABLE D

CATEGORY F-B - LINEAR TYPE SUPPORTS

ASME SEC. XI ITEM #	ITEM DESCRIPTION	EXAM METHOD	SYSTEM DESCRIPTION	ZONE	NUMBER OF COMPONENTS	RELIEF REQ.	# OF COMPONENTS SCHEDULED/COMPLETED 1ST PER	2ND PER	3RD PER
F2.10	MECHANICAL CONNECTIONS TO PRESSURE RETAINING COMPONENTS AND BUILDING STRUCTURE	VT-3	RCS	38	6		1/0	1/0	0/0
F2.10	MECHANICAL CONNECTIONS TO PRESSURE RETAINING COMPONENTS AND BUILDING STRUCTURE	VT-3	SI	39	10		1/0	1/0	1/0
F2.10	MECHANICAL CONNECTIONS TO PRESSURE RETAINING COMPONENTS AND BUILDING STRUCTURE	VT-3	SI	40	13		2/0	1/0	1/0

ST. LUCIE NUCLEAR PLANT UNIT 1
INSERVICE INSPECTION PLAN FOR THE FIRST INTERVAL
CLASS 1 SECTION XI SUMMARY
TABLE D

CATEGORY F-C - COMPONENT STANDARD SUPPORTS

ASME SEC. XI ITEM #	ITEM DESCRIPTION	EXAM METHOD	SYSTEM DESCRIPTION	ZONE	NUMBER OF COMPONENTS	RELIEF REQ.	# OF COMPONENTS SCHEDULED/COMPLETED 1ST PER	2ND PER	3RD PER
F3.10	MECHANICAL CONNECTIONS TO PRESSURE RETAINING COMPONENTS AND BUILDING STRUCTURE	VT-3	RCS	16	3		0/0	1/0	0/0
F3.10	MECHANICAL CONNECTIONS TO PRESSURE RETAINING COMPONENTS AND BUILDING STRUCTURE	VT-3	SI	21	17		1/0	2/0	1/0
F3.10	MECHANICAL CONNECTIONS TO PRESSURE RETAINING COMPONENTS AND BUILDING STRUCTURE	VT-3	SI	22	9		1/0	1/0	1/0
F3.10	MECHANICAL CONNECTIONS TO PRESSURE RETAINING COMPONENTS AND BUILDING STRUCTURE	VT-3	SI	23	5		0/0	0/0	1/0
F3.10	MECHANICAL CONNECTIONS TO PRESSURE RETAINING COMPONENTS AND BUILDING STRUCTURE	VT-3	SI	24	13		1/0	1/0	1/0
F3.10	MECHANICAL CONNECTIONS TO PRESSURE RETAINING COMPONENTS AND BUILDING STRUCTURE	VT-3	RCS	25	4		0/0	0/0	1/0
F3.10	MECHANICAL CONNECTIONS TO PRESSURE RETAINING COMPONENTS AND BUILDING STRUCTURE	VT-3	RCS	26	6		0/0	1/0	1/0
F3.10	MECHANICAL CONNECTIONS TO PRESSURE RETAINING COMPONENTS AND BUILDING STRUCTURE	VT-3	RCS	27	5		1/0	0/0	1/0
F3.10	MECHANICAL CONNECTIONS TO PRESSURE RETAINING COMPONENTS AND BUILDING STRUCTURE	VT-3	RCS	28	2		0/0	1/0	0/0
F3.10	MECHANICAL CONNECTIONS TO PRESSURE RETAINING COMPONENTS AND BUILDING STRUCTURE	VT-3	RCS	29	1		0/0	0/0	1/0
F3.10	MECHANICAL CONNECTIONS TO PRESSURE RETAINING COMPONENTS AND BUILDING STRUCTURE	VT-3	CH	30	11		1/0	1/0	1/0

ST. LUCIE NUCLEAR PLANT UNIT 1
INSERVICE INSPECTION PLAN FOR THE FIRST INTERVAL
CLASS 1 SECTION XI SUMMARY
TABLE D

CATEGORY F-C - COMPONENT STANDARD SUPPORTS

ASME SEC. XI ITEM #	ITEM DESCRIPTION	EXAM METHOD	SYSTEM DESCRIPTION	ZONE	NUMBER OF COMPONENTS	RELIEF REQ.	# OF COMPONENTS SCHEDULED/COMPLETED 1ST PER	2ND PER	3RD PER
F3.10	MECHANICAL CONNECTIONS TO PRESSURE RETAINING COMPONENTS AND BUILDING STRUCTURE	VT-3	CH	31	9		0/0	1/0	1/0
F3.10	MECHANICAL CONNECTIONS TO PRESSURE RETAINING COMPONENTS AND BUILDING STRUCTURE	VT-3	CH	32	26		2/0	2/0	2/0
F3.10	MECHANICAL CONNECTIONS TO PRESSURE RETAINING COMPONENTS AND BUILDING STRUCTURE	VT-3	RCS	37	14		1/0	1/0	1/0
F3.10	MECHANICAL CONNECTIONS TO PRESSURE RETAINING COMPONENTS AND BUILDING STRUCTURE	VT-3	RCS	38	8		1/0	1/0	2/0
F3.10	MECHANICAL CONNECTIONS TO PRESSURE RETAINING COMPONENTS AND BUILDING STRUCTURE	VT-3	SI	39	17		1/0	2/0	1/0
F3.10	MECHANICAL CONNECTIONS TO PRESSURE RETAINING COMPONENTS AND BUILDING STRUCTURE	VT-3	SI	40	21		2/0	2/0	2/0

APPENDIX E

CLASS 2 HANGER SUMMARY TABLES

ST. LUCIE NUCLEAR PLANT UNIT 1
INSERVICE INSPECTION PLAN FOR THE FIRST INTERVAL
CLASS 2 SECTION XI SUMMARY
TABLE E

CATEGORY F-A - PLATE AND SHELL TYPE SUPPORTS

ASME SEC. XI ITEM #	ITEM DESCRIPTION	EXAM METHOD.	SYSTEM DESCRIPTION	ZONE	NUMBER OF COMPONENTS	RELIEF REQ.	# OF COMPONENTS SCHEDULED/COMPLETED 1ST PER	2ND PER	3RD PER
F1.10	MECHANICAL CONNECTIONS TO PRESSURE RETAINING COMPONENTS AND BUILDING STRUCTURE	VT-3	ALL	NONE	0		0/0	0/0	0/0

ST. LUCIE NUCLEAR PLANT UNIT 1
INSERVICE INSPECTION PLAN FOR THE FIRST INTERVAL
CLASS 2 SECTION XI SUMMARY
TABLE E

CATEGORY F-B - LINEAR TYPE SUPPORTS

ASME SEC. XI ITEM #	ITEM DESCRIPTION	EXAM METHOD	SYSTEM DESCRIPTION	ZONE	NUMBER OF COMPONENTS	RELIEF REQ.	# OF COMPONENTS SCHEDULED/COMPLETED 1ST PER	2ND PER	3RD PER
F2.10	MECHANICAL CONNECTIONS TO PRESSURE RETAINING COMPONENTS AND BUILDING STRUCTURE	VT-3	SI	44	2		0/0	1/0	1/0
F2.10	MECHANICAL CONNECTIONS TO PRESSURE RETAINING COMPONENTS AND BUILDING STRUCTURE	VT-3	HPSI	61	7		1/0	0/0	1/0
F2.10	MECHANICAL CONNECTIONS TO PRESSURE RETAINING COMPONENTS AND BUILDING STRUCTURE	VT-3	HPSI	62	23		2/0	1/0	2/0
F2.10	MECHANICAL CONNECTIONS TO PRESSURE RETAINING COMPONENTS AND BUILDING STRUCTURE	VT-3	MSS	63	5		1/0	1/0	1/0
F2.10	MECHANICAL CONNECTIONS TO PRESSURE RETAINING COMPONENTS AND BUILDING STRUCTURE	VT-3	MSS	64	2		0/0	1/0	0/0
F2.10	MECHANICAL CONNECTIONS TO PRESSURE RETAINING COMPONENTS AND BUILDING STRUCTURE	VT-3	MSS	65	2		0/0	0/0	1/0
F2.10	MECHANICAL CONNECTIONS TO PRESSURE RETAINING COMPONENTS AND BUILDING STRUCTURE	VT-3	MSS	66	2		0/0	0/0	1/0
F2.10	MECHANICAL CONNECTIONS TO PRESSURE RETAINING COMPONENTS AND BUILDING STRUCTURE	VT-3	MFW	67	2		1/0	0/0	0/0
F2.10	MECHANICAL CONNECTIONS TO PRESSURE RETAINING COMPONENTS AND BUILDING STRUCTURE	VT-3	MFW	68	2		0/0	1/0	0/0
F2.10	MECHANICAL CONNECTIONS TO PRESSURE RETAINING COMPONENTS AND BUILDING STRUCTURE	VT-3	MFW	71	1		0/0	0/0	1/0
F2.10	MECHANICAL CONNECTIONS TO PRESSURE RETAINING COMPONENTS AND BUILDING STRUCTURE	VT-3	MFW	72	1		1/0	0/0	0/0

ST. LUCIE NUCLEAR PLANT UNIT 1
INSERVICE INSPECTION PLAN FOR THE FIRST INTERVAL
CLASS 2 SECTION XI SUMMARY
TABLE E

CATEGORY F-B - LINEAR TYPE SUPPORTS

ASME SEC. XI ITEM #	ITEM DESCRIPTION	EXAM METHOD	SYSTEM DESCRIPTION	ZONE	NUMBER OF COMPONENTS	RELIEF REQ.	# OF COMPONENTS SCHEDULED/COMPLETED 1ST PER	2ND PER	3RD PER
F2.10	MECHANICAL CONNECTIONS TO PRESSURE RETAINING COMPONENTS AND BUILDING STRUCTURE	VT-3	MFW	87	2		0/0	1/0	0/0

ST. LUCIE NUCLEAR PLANT UNIT 1
INSERVICE INSPECTION PLAN FOR THE FIRST INTERVAL
CLASS 2 SECTION XI SUMMARY
TABLE E

CATEGORY F-C - COMPONENT STANDARD SUPPORTS

ASME SEC. XI ITEM #	ITEM DESCRIPTION	EXAM METHOD	SYSTEM DESCRIPTION	ZONE	NUMBER OF COMPONENTS	RELIEF REQ.	# OF COMPONENTS SCHEDULED/COMPLETED 1ST PER	2ND PER	3RD PER
F3.10	MECHANICAL CONNECTIONS TO PRESSURE RETAINING COMPONENTS AND BUILDING STRUCTURE	VT-3	SI	44	8		2/0	3/0	3/0
F3.10	MECHANICAL CONNECTIONS TO PRESSURE RETAINING COMPONENTS AND BUILDING STRUCTURE	VT-3	HPSI	61	11		1/0	1/0	1/0
F3.10	MECHANICAL CONNECTIONS TO PRESSURE RETAINING COMPONENTS AND BUILDING STRUCTURE	VT-3	HPSI	62	10		1/0	1/0	1/0
F3.10	MECHANICAL CONNECTIONS TO PRESSURE RETAINING COMPONENTS AND BUILDING STRUCTURE	VT-3	MSS	63	5		0/0	1/0	1/0
F3.10	MECHANICAL CONNECTIONS TO PRESSURE RETAINING COMPONENTS AND BUILDING STRUCTURE	VT-3	MSS	64	8		0/0	1/0	1/0
F3.10	MECHANICAL CONNECTIONS TO PRESSURE RETAINING COMPONENTS AND BUILDING STRUCTURE	VT-3	MSS	65	1		1/0	0/0	0/0
F3.10	MECHANICAL CONNECTIONS TO PRESSURE RETAINING COMPONENTS AND BUILDING STRUCTURE	VT-3	MSS	66	1		0/0	1/0	0/0
F3.10	MECHANICAL CONNECTIONS TO PRESSURE RETAINING COMPONENTS AND BUILDING STRUCTURE	VT-3	MFW	67	6		0/0	0/0	1/0
F3.10	MECHANICAL CONNECTIONS TO PRESSURE RETAINING COMPONENTS AND BUILDING STRUCTURE	VT-3	MFW	68	9		1/0	1/0	0/0
F3.10	MECHANICAL CONNECTIONS TO PRESSURE RETAINING COMPONENTS AND BUILDING STRUCTURE	VT-3	HPSI	93	4		0/0	0/0	1/0
F3.10	MECHANICAL CONNECTIONS TO PRESSURE RETAINING COMPONENTS AND BUILDING STRUCTURE	VT-3	HPSI	84	4		0/0	1/0	0/0

ST. LUCIE NUCLEAR PLANT UNIT 1
INSERVICE INSPECTION PLAN FOR THE FIRST INTERVAL
CLASS 2 SECTION XI SUMMARY
TABLE E

CATEGORY F-C - COMPONENT STANDARD SUPPORTS

ASME SEC. XI ITEM #	ITEM DESCRIPTION	EXAM METHOD	SYSTEM DESCRIPTION	ZONE	NUMBER OF COMPONENTS	RELIEF REQ.	# OF COMPONENTS SCHEDULED/COMPLETED 1ST PER	2ND PER	3RD PER
F3.10	MECHANICAL CONNECTIONS TO PRESSURE RETAINING COMPONENTS AND BUILDING STRUCTURE	VT-3	HPSI	85	4		1/0	0/0	0/0
F3.10	MECHANICAL CONNECTIONS TO PRESSURE RETAINING COMPONENTS AND BUILDING STRUCTURE	VT-3	HPSI	86	3		0/0	0/0	1/0
F3.10	MECHANICAL CONNECTIONS TO PRESSURE RETAINING COMPONENTS AND BUILDING STRUCTURE	VT-3	HPSI	87	27		2/0	3/0	2/0

APPENDIX F

CLASS 3 HANGER SUMMARY TABLES

ST. LUCIE NUCLEAR PLANT UNIT 1
INSERVICE INSPECTION PLAN FOR THE FIRST INTERVAL
CLASS 3 SECTION XI SUMMARY
TABLE F

CATEGORY F-A - PLATE AND SHELL TYPE SUPPORTS

ASME SEC. XI ITEM #	ITEM DESCRIPTION	EXAM METHOD	SYSTEM DESCRIPTION	ZONE	NUMBER OF COMPONENTS	RELIEF REQ.	# OF COMPONENTS SCHEDULED/COMPLETED 1ST PER	2ND PER	3RD PER
F1.10	MECHANICAL CONNECTIONS TO PRESSURE RETAINING COMPONENTS AND BUILDING STRUCTURE	VT-3	CC	102	1		0/0	0/0	0/0
F1.10	MECHANICAL CONNECTIONS TO PRESSURE RETAINING COMPONENTS AND BUILDING STRUCTURE	VT-3	CH	110	3		1/0	1/0	1/0

CATEGORY F-B - LINEAR TYPE SUPPORTS

ASME SEC. XI ITEM #	ITEM DESCRIPTION	EXAM METHOD	SYSTEM DESCRIPTION	ZONE	NUMBER OF COMPONENTS	RELIEF REQ.	# OF COMPONENTS SCHEDULED/COMPLETED 1ST PER	2ND PER	3RD PER
F2.10	MECHANICAL CONNECTIONS TO PRESSURE RETAINING COMPONENTS AND BUILDING STRUCTURE	VT-3	CC	100	9		1/0	1/0	0/0
F2.10	MECHANICAL CONNECTIONS TO PRESSURE RETAINING COMPONENTS AND BUILDING STRUCTURE	VT-3	CC	101	12		1/0	1/0	1/0
F2.10	MECHANICAL CONNECTIONS TO PRESSURE RETAINING COMPONENTS AND BUILDING STRUCTURE	VT-3	CC	102	24		2/0	2/0	2/0
F2.10	MECHANICAL CONNECTIONS TO PRESSURE RETAINING COMPONENTS AND BUILDING STRUCTURE	VT-3	CC	103	14		1/0	1/0	1/0
F2.10	MECHANICAL CONNECTIONS TO PRESSURE RETAINING COMPONENTS AND BUILDING STRUCTURE	VT-3	CC	104	22		1/0	2/0	2/0
F2.10	MECHANICAL CONNECTIONS TO PRESSURE RETAINING COMPONENTS AND BUILDING STRUCTURE	VT-3	CC	105	24		2/0	2/0	2/0
F2.10	MECHANICAL CONNECTIONS TO PRESSURE RETAINING COMPONENTS AND BUILDING STRUCTURE	VT-3	CC	106	12		1/0	1/0	1/0
F2.10	MECHANICAL CONNECTIONS TO PRESSURE RETAINING COMPONENTS AND BUILDINS STRUCTURE	VT-3	CW	107	16		2/0	1/0	1/0
F2.10	MECHANICAL CONNECTIONS TO PRESSURE RETAINING COMPONENTS AND BUILDING STRUCTURE	VT-3	CW	108	19		1/0	2/0	2/0
F2.10	MECHANICAL CONNECTIONS TO PRESSURE RETAINING COMPONENTS AND BUILDING STRUCTURE	VT-3	CW	109	18		1/0	2/0	1/0
F2.10	MECHANICAL CONNECTIONS TO PRESSURE RETAINING COMPONENTS AND BUILDING STRUCTURE	VT-3	CW	110	16		5/0	5/0	5/0

ST. LUCIE NUCLEAR PLANT UNIT 1
INSERVICE INSPECTION PLAN FOR THE FIRST INTERVAL
CLASS 3 SECTION XI SUMMARY
TABLE F

CATEGORY F-B - LINEAR TYPE SUPPORTS

ASME SEC. XI ITEM #	ITEM DESCRIPTION	EXAM METHOD	SYSTEM DESCRIPTION	ZONE	NUMBER OF COMPONENTS	RELIEF REQ.	# OF COMPONENTS SCHEDULED/COMPLETED 1ST PER	2ND PER	3RD PER
F2.10	MECHANICAL CONNECTIONS TO PRESSURE RETAINING COMPONENTS AND BUILDING STRUCTURE	VT-3	SFC	111	4		0/0	1/0	0/0
F2.10	MECHANICAL CONNECTIONS TO PRESSURE RETAINING COMPONENTS AND BUILDING STRUCTURE	VT-3	AFW	112	6		0/0	0/0	1/0
F2.10	MECHANICAL CONNECTIONS TO PRESSURE RETAINING COMPONENTS AND BUILDING STRUCTURE	VT-3	AFW	113	7		1/0	1/0	0/0
F2.10	MECHANICAL CONNECTIONS TO PRESSURE RETAINING COMPONENTS AND BUILDING STRUCTURE	VT-3	C	118	7		0/0	1/0	1/0
F2.10	MECHANICAL CONNECTIONS TO PRESSURE RETAINING COMPONENTS AND BUILDING STRUCTURE	VT-3	C	120	6		0/0	1/0	0/0

CATEGORY F-C - COMPONENT STANDARD SUPPORTS

ASME SEC. XI ITEM #	ITEM DESCRIPTION	EXAM METHOD	SYSTEM DESCRIPTION	ZONE	NUMBER OF COMPONENTS	RELIEF REQ.	# OF COMPONENTS SCHEDULED/COMPLETED 1ST PER	2ND PER	3RD PER
F3.10	MECHANICAL CONNECTIONS TO PRESSURE RETAINING COMPONENTS AND BUILDING STRUCTURE	VT-3	CC	100	13		1/0	1/0	1/0
F3.10	MECHANICAL CONNECTIONS TO PRESSURE RETAINING COMPONENTS AND BUILDING STRUCTURE	VT-3	CC	101	17		1/0	2/0	1/0
F3.10	MECHANICAL CONNECTIONS TO PRESSURE RETAINING COMPONENTS AND BUILDING STRUCTURE	VT-3	CC	102	20		2/0	1/0	2/0
F3.10	MECHANICAL CONNECTIONS TO PRESSURE RETAINING COMPONENTS AND BUILDING STRUCTURE	VT-3	CC	103	15		1/0	2/0	1/0
F3.10	MECHANICAL CONNECTIONS TO PRESSURE RETAINING COMPONENTS AND BUILDING STRUCTURE	VT-3	CC	104	8		0/0	1/0	1/0
F3.10	MECHANICAL CONNECTIONS TO PRESSURE RETAINING COMPONENTS AND BUILDING STRUCTURE	VT-3	CC	105	21		2/0	1/0	2/0
F3.10	MECHANICAL CONNECTIONS TO PRESSURE RETAINING COMPONENTS AND BUILDING STRUCTURE	VT-3	CC	106	5		0/0	1/0	0/0
F3.10	MECHANICAL CONNECTIONS TO PRESSURE RETAINING COMPONENTS AND BUILDING STRUCTURE	VT-3	CW	107	6		0/0	0/0	1/0
F3.10	MECHANICAL CONNECTIONS TO PRESSURE RETAINING COMPONENTS AND BUILDING STRUCTURE	VT-3	CW	108	23		2/0	2/0	2/0
F3.10	MECHANICAL CONNECTIONS TO PRESSURE RETAINING COMPONENTS AND BUILDING STRUCTURE	VT-3	CW	109	13		1/0	2/0	1/0
F3.10	MECHANICAL CONNECTIONS TO PRESSURE RETAINING COMPONENTS AND BUILDING STRUCTURE	VT-3	CW	110	2		0/0	0/0	0/0

ST. LUCIE NUCLEAR PLANT UNIT 1
INSERVICE INSPECTION PLAN FOR THE FIRST INTERVAL
CLASS 3 SECTION XI SUMMARY
TABLE F

CATEGORY F-C - COMPONENT STANDARD SUPPORTS

ASME SEC. XI ITEM #	ITEM DESCRIPTION	EXAM METHOD	SYSTEM DESCRIPTION	ZONE	NUMBER OF COMPONENTS	RELIEF REQ.	# OF COMPONENTS SCHEDULED/COMPLETED 1ST PER	2ND PER	3RD PER
F3.10	MECHANICAL CONNECTIONS TO PRESSURE RETAINING COMPONENTS AND BUILDING STRUCTURE	VT-3	SFC	111	6		0/0	0/0	1/0
F3.10	MECHANICAL CONNECTIONS TO PRESSURE RETAINING COMPONENTS AND BUILDING STRUCTURE	VT-3	AFW	112	22		2/0	2/0	2/0
F3.10	MECHANICAL CONNECTIONS TO PRESSURE RETAINING COMPONENTS AND BUILDING STRUCTURE	VT-3	AFW	113	15		1/0	1/0	2/0
F3.10	MECHANICAL CONNECTIONS TO PRESSURE RETAINING COMPONENTS AND BUILDING STRUCTURE	VT-3	AFW	114	14		1/0	1/0	2/0
F3.10	MECHANICAL CONNECTIONS TO PRESSURE RETAINING COMPONENTS AND BUILDING STRUCTURE	VT-3	AFW	115	10		1/0	1/0	0/0
F3.10	MECHANICAL CONNECTIONS TO PRESSURE RETAINING COMPONENTS AND BUILDING STRUCTURE	VT-3	AFW	116	5		0/0	0/0	1/0
F3.10	MECHANICAL CONNECTIONS TO PRESSURE RETAINING COMPONENTS AND BUILDING STRUCTURE	VT-3	AFW	117	6		1/0	0/0	1/0
F3.10	MECHANICAL CONNECTIONS TO PRESSURE RETAINING COMPONENTS AND BUILDING STRUCTURE	VT-3	C	118	16		1/0	1/0	2/0
F3.10	MECHANICAL CONNECTIONS TO PRESSURE RETAINING COMPONENTS AND BUILDING STRUCTURE	VT-3	C	119	16		1/0	2/0	1/0

APPENDIX G

ASME CODE CASES

APPENDIX G

ASME CODE CASES

The following is a list of ASME Code Cases which have been evaluated by FP&L as applicable to the St.Lucie Second Ten Year Inservice Inspection Program and are therefore incorporated into the program.

CODE CASE	TITLE
N-307-1	Revised Ultrasonic Examination Volume for Class 1 Bolting,Examination Category B-G-1
N-335-1	Rules for Ultrasonic Examination of Similar and Dissimilar Metal Welds
N-408	Alternate Rules for Examination of Class 2 Piping
N-416	Alternative Rules for Hydrostatic Testing of Repair or Replacement of Class 2 Piping
N-419	Extent of VT-1 Examinations Category B-G-1 of Table IWB-2500-1
N-424	Qualification of Visual Examination Personnel
N-426	Extent of VT-1 Examinations, Category B-G-2 of Table IWB-2500-1

CODE BOUNDARY DRAWINGS

8.0 Code Boundary Drawings

In this section are all the Code boundary drawings for the Class 1, 2, and 3 systems. Code Class is designated on each drawing using a letters and and colors. Class 1 systems are color coded RED. and denoted with the letter A boxed. Class 2 systems are color coded BLUE and denoted with the letter B boxed. Class 3 systems are color coded GREEN and the letter C boxed is used.

CODE BOUNDARY DRAWING LIST

Drawing Number	Rev.	Sheet No.	Title
8770-E-80303 PSL1-CB-007-1	1	1 of 5	Ultimate Heat Sink
8770-E-80303 PSL1-CB-007-2	1 1	2 of 5 3 of 5	Component Cooling Water System
8770-E-80303 PSL1-CB-007-3	1	5 of 5	Intake Cooling Water System
8770-E-80306 PSL1-CB-009-1	1	1 of 2	Miscellaneous Systems
8770-E-80307 PSL1-CB-001-1 PSL1-CB-001-2 PSL1-CB-001-3	1	1 of 3 Thru 3 of 3	Main Steam, Feedwater, Blowdown, Aux. Feedwater and Condensate Storage
8770-E-80308 PSL1-CB-002-1 PSL1-CB-002-2	1	1 of 3 Thru 3 of 3	Reactor Coolant System
8770-E-80309 PSL1-CB-003-1 PSL1-CB-003-2 PSL1-CB-003-3	1	1 of 5 Thru 5 of 5	Chemical & Volume Control and Sampling System
8870-E-80310 PSL1-CB-004-1 PSL1-CB-004-2	1	1 of 4 Thru 3 of 4	Safety Injection and Shutdown Cooling System
8770-E-80311 PSL1-CB-005-1 PSL1-CB-005-2	1	1 of 2 Thru 2 of 2	Containment Spray, Iodine Removal and Refueling Water Systems
8770-E-80312 PSL1-CB-006-1 PSL1-CB-006-2	1	1 of 3 Thru 2 of 3	Fuel Pool Cooling and Waste Gas Systems

FPL

FLORIDA POWER & LIGHT COMPANY

ST. LUCIE NUCLEAR PLANT UNIT NO. 1 RR N0. 1

SUMMARY OF INCOMPLETE EXAMINATIONS

PROGRAM ITEM NO.	IDENTIFICATION NUMBER	DESCRIPTION	ASME CODE ITEM NO.	ASME CODE CATEGORY	DESCRIPTION OF LIMITATION	REL REQ	FIG. NO.	REMARKS
ZONE 1	SHELL WELDS 9-203	CIRC. WELDS MIDDLE SHELL TO LOWER SHELL	B1.10 B1.11	B-A	N/A SURVEILLANCE SPECIMEN 0-15.8% 45-.30% 45-22.05% 60T-14.3% 60-29.17% 70RL-2.41% 70RLT-.21%	N/A 1	N/A 001-LIM 001-SKT	N/A COMBINED COVERAGE 0%
	3-203A 3-203B 3-203C	LOWER SHELL VERTICAL WELDS	B1.12	B-A	ANTI-ROTATION LUGS 0 -38.56% 45-5.0% 60-28.56%	1	001-PSLRR	COMBINED COVERAGE 0%
	HEAD WELDS 10-203	CIRC WELDS LOWER SHELL TO LOWER HEAD WELD	B1.20 B1.21	B-A	N/A CORE SUPPORT LUGS & ANTI-ROTATION LUGS 0-36.61% 45-2.45% 45-17.71% 60-8.73% 60-23.46%	N/A 1	N/A 001-LIM	N/A COMBINED COVERAGE 0%
	204-02	LOWER HEAD DOLLAR PLATE WELD	B1.21	B-A	NEAR SURFACE INTERFACE NOISE 0-50.0% 60-16.98%	1	001-LIM 001-PSLRR	COMBINED COVERAGE 0%
TI APERTURE CARD Also Available On Aperture Card	204-03A 204-03B 204-03C 204-03D 204-03E 204-03F	LOWER HEAD MERIDIONAL WELDS	B1.22	B-A	CORE SUPPORT LUGS FLOW SKIRT 0-74.82% 45-63.92% 60-62.24% 45T-57.13% 60T-49.56%	1	001-LIM	COMBINED COVERAGE 0%
	7-203	UPPER SHELL TO FLANGE WELD	B1.30	B-A	NEAR SURFACE INTERFACE NOISE NO TRANSVERSE SCAN DUE TO CONFIGURATION 0-80.83% 45T-58.11% 45-35.0% 60T-58.11% 60-1.32%	1	001-SKT	COMBINED COVERAGE 0%

8709090272-01

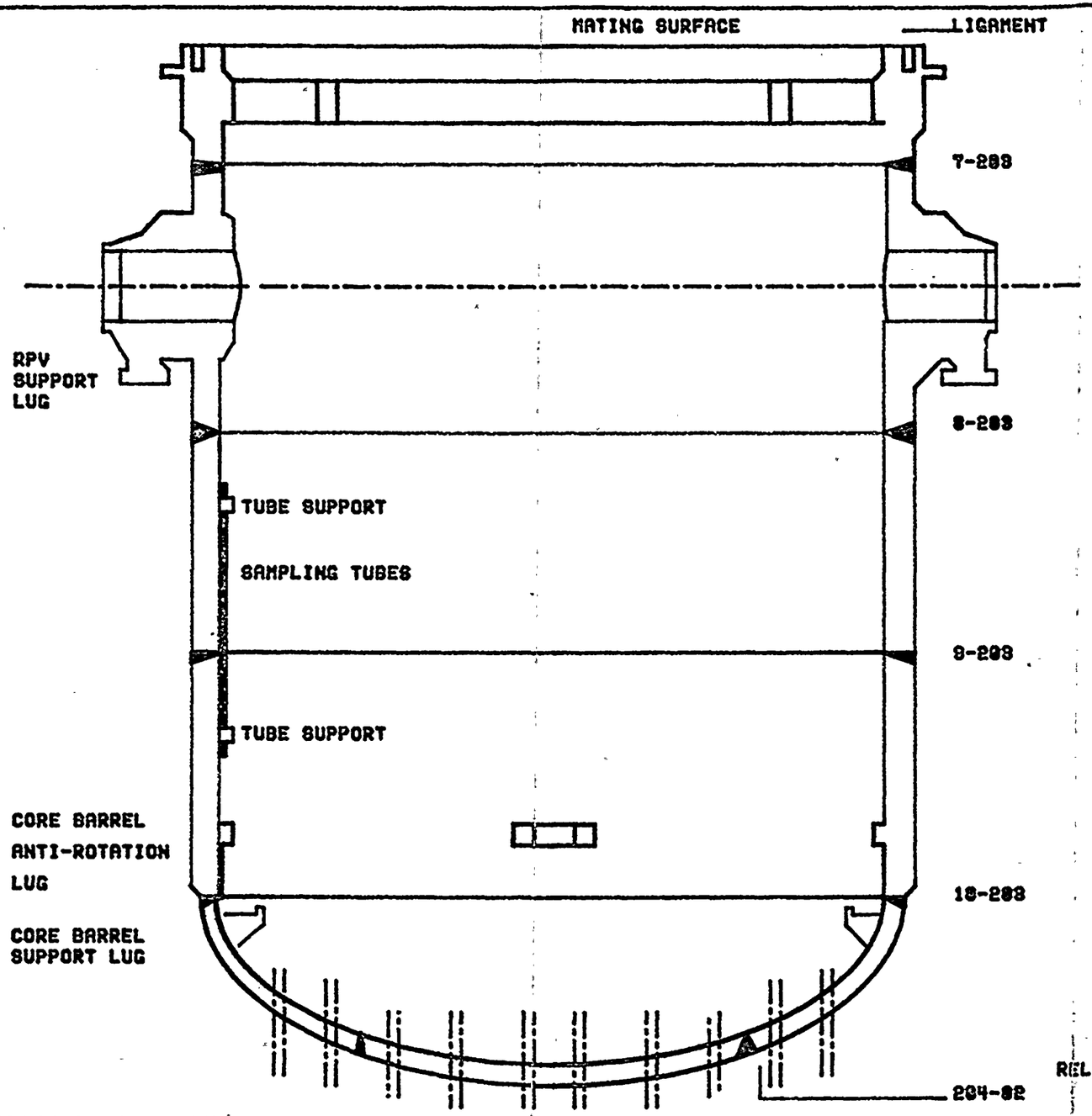

TI
APERTURE
CARD

Also Available On
Card

RELIEF REQUEST NO. 1

REFERENCE DRAWINGS: REV:	PRESSURE & TEMPERATURE STATS	MATERIAL SPECS SIZE SCH TYPE	CODES AND PROGRAMS GROUP ST. LUCIE POWER PLANT
	DESIGN PSIG: TEMP(F):		TITLE: ST. LUCIE REACTOR PRESSURE VESSEL GENERAL ARRANGEMENT
	OPERATING PSIG: TEMP(F):		DATE: 8/24/1987 ZONE: 01
	HYDROSTATIC PSIG: TEMP(F):	UT CALIBRATION BLOCK:	REV. 0 / APPROVED BY: E. L. ANDERSON / DRAWING NUMBER: 881-PSLRR

8709090272-02

MECHANIZED ULTRASONIC EXAMINATION LIMITATIONS

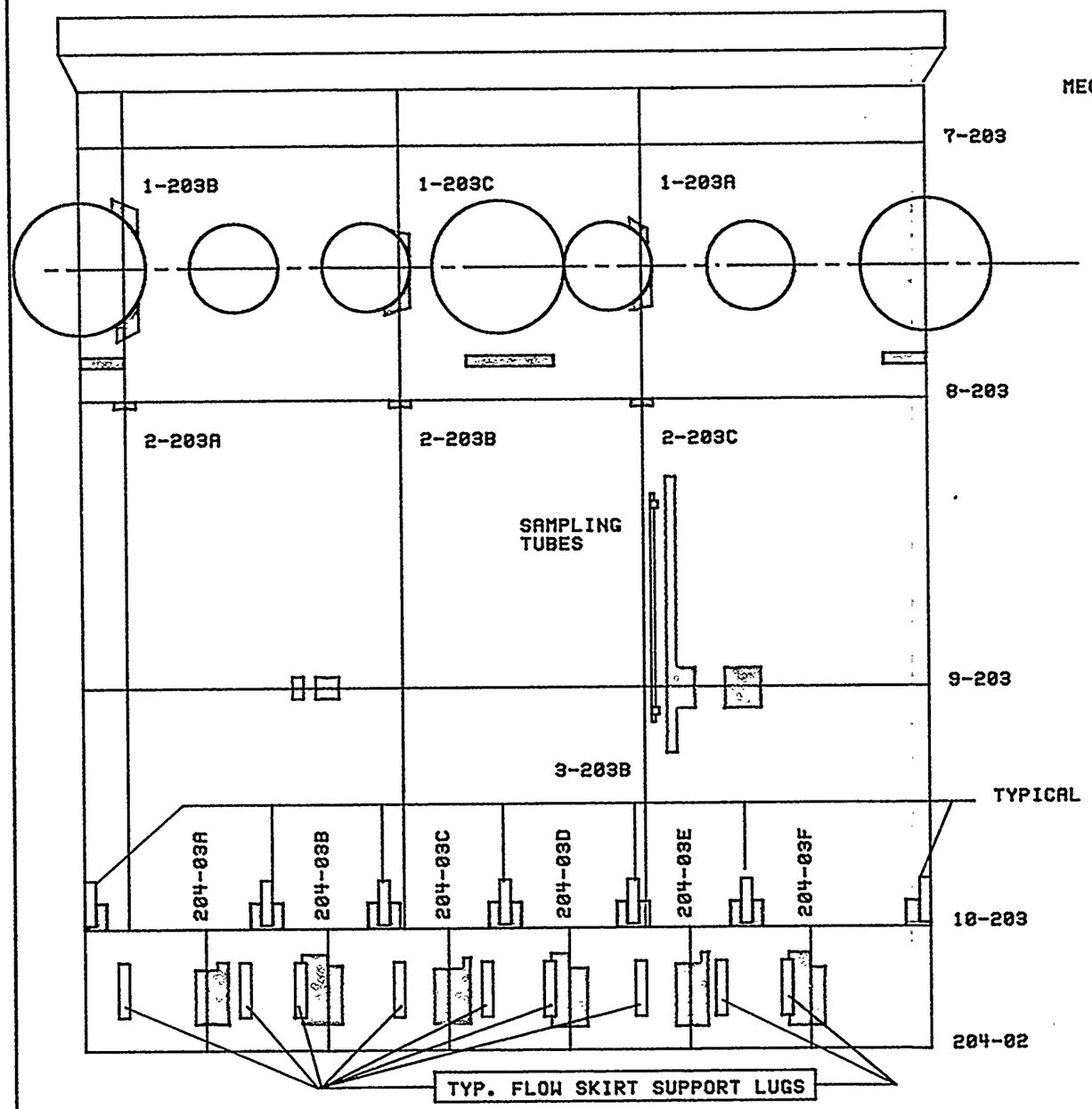

▤ = LIMITATIONS

TI APERTURE CARD

Also Available On Aperture Card

REFERENCE DRAWINGS: REV:	PRESSURE & TEMPERATURE STATS	MATERIAL SPECS SIZE SCH TYPE	CODES AND PROGRAMS GROUP ST. LUCIE NUCLEAR PLANT
	DESIGN PSIG: TEMP(F):		TITLE: RPV COMPOSITE OF ALL LIMITATIONS RELIEF REQUEST NO. 1
	OPERATING PSIG: TEMP(F):		DATE: 7/26/87 ZONE: 01
	HYDROSTATIC PSIG: TEMP(F):	UT CALIBRATION BLOCK:	REV. 0 / APPROVED BY: E. L. ANDERSON / DRAWING NUMBER: 001-LIM

8709090272-03

MECHANIZED ULTRASONIC EXAMINATION LIMITATIONS

CHARPY TUBES

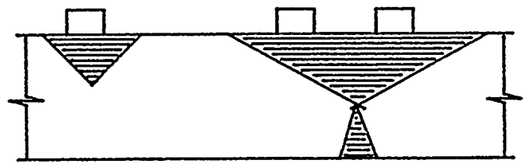

CIRC WELD 9-203
TYP VOLUME NOT COVERED - TRANSVERSE
AREA OF CHARPY TUBES
FIG. NO. 3

CHARPY TUBES

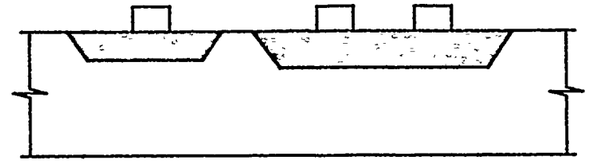

CIRC WELD 9-203
AREA NOT COVERED AT CHARPY TUBES

FIG. NO. 4

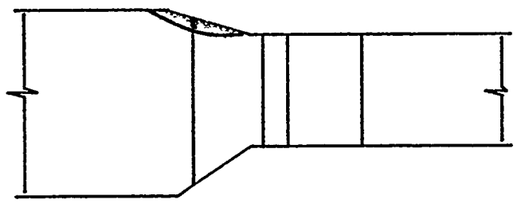

WELD 8-203
AREA NOT COVERED

FIG. NO. 5

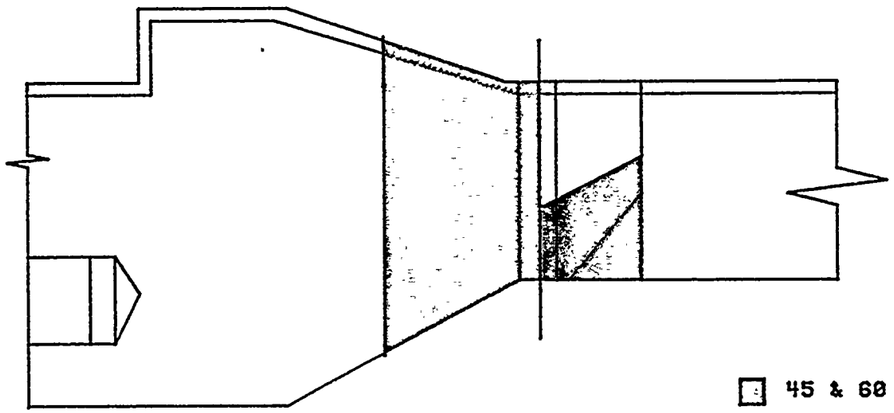

CIRC WELD 7-203

NO 45 & 60 ON FLANGE

45 & 60 LIMITED ON OUTLET

NOZZLES ONLY

FIG. NO. 7

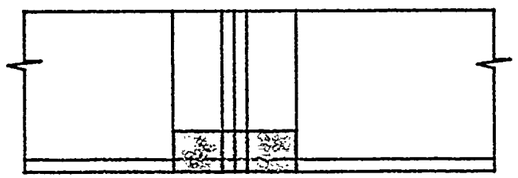

TYPICAL VERTICAL & CIRCUMFERENTIAL WELD
0 DEGREE GATE LIMITATIONS

FIG. NO. 6

TI
APERTURE
CARD

Also Available On
Aperture Card

- ☐ 45 & 60 DEGREE TRANSVERSE
- ☐ 45 & 60 DEGREE LIMITATIONS
- ▤ 60 DEGREE LIMITATIONS
- ▤ 45 DEGREE LIMITATIONS
- ☐ 70 DEGREE REFRACTED LONGITUDINAL CW & CCW
- ☐ 0 DEGREE LIMITATIONS

REFERENCE DRAWINGS: REV:	PRESSURE & TEMPERATURE STATS	MATERIAL SPECS SIZE SCH TYPE	CODES AND PROGRAMS GROUP ST. LUCIE NUCLEAR PLANT
	DESIGN PSIG: TEMP(F):		TITLE: ULTRASONIC SCAN LIMITATIONS RELIEF REQUEST NO. 1
	OPERATING PSIG: TEMP(F):		DATE: 7/26/87 ZONE: 01
	HYDROSTATIC PSIG: TEMP(F):	UT CALIBRATION BLOCK:	REV. 0 | APPROVED BY: E. L. ANDERSON | DRAWING NUMBER: 001-SKT

8709090272-04

FPL

FLORIDA POWER & LIGHT COMPANY

ST. LUCIE NUCLEAR PLANT UNIT NO. 1

SUMMARY OF INCOMPLETE EXAMINATIONS

PROGRAM ITEM NO.	IDENTIFICATION NUMBER	DESCRIPTION	ASME CODE ITEM NO.	ASME CODE CATEGORY	DESCRIPTION OF LIMITATION	REL REQ	FIG. NO.	REMARKS
ZONE 2	209-02	CLOSURE HEAD TO FLANGE	B1.40	B-A	ONE SIDE EXAM DUE TO CONFIGURATION	2	001 -CH	
	209-03A 209-03B 209-03C 209-03D 209-03E 209-03F	MERIDIONAL WELD INTERSECTING HEAD TO FLANGE	B1.22	B-A TI 'APERTURE' CARD Also Available On Aperture Card	INSULATION RING LIMITS 15-1/2" OF WELD TO BE EXAMINED	2	001 -CH -1	

8709090272-05

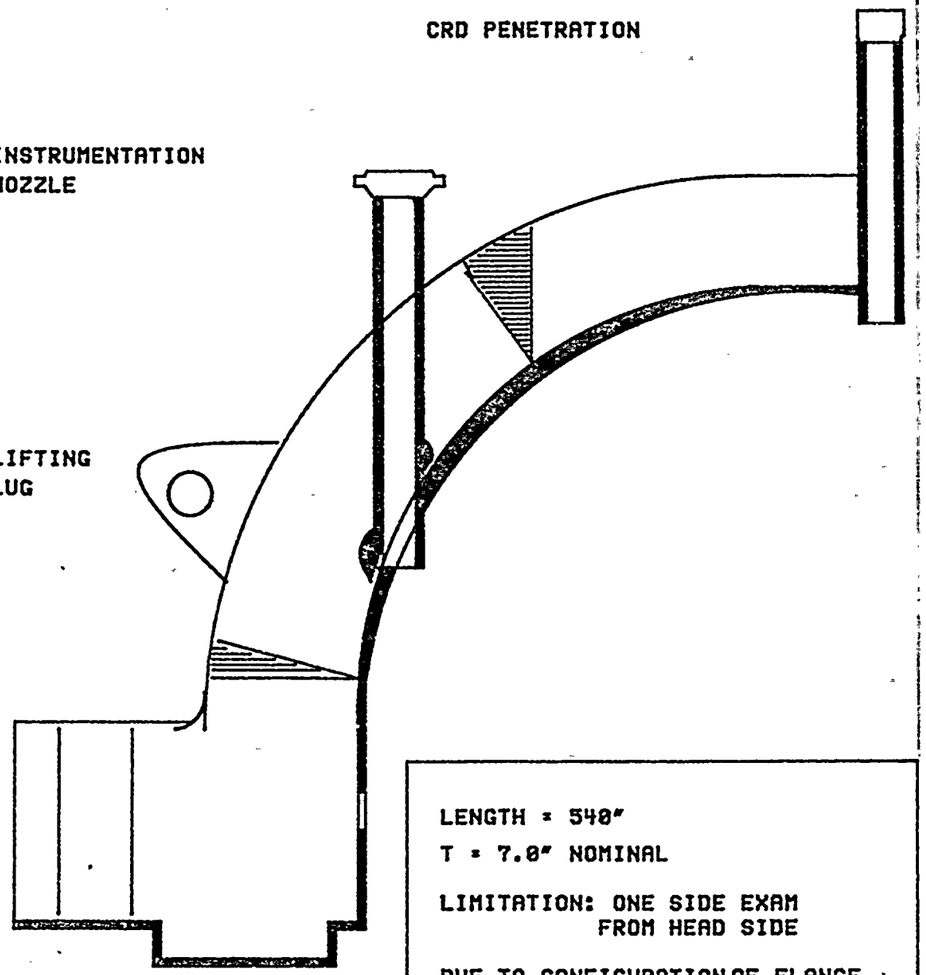

LENGTH = 540"

T = 7.0" NOMINAL

LIMITATION: ONE SIDE EXAM
FROM HEAD SIDE

DUE TO CONFIGURATION OF FLANGE

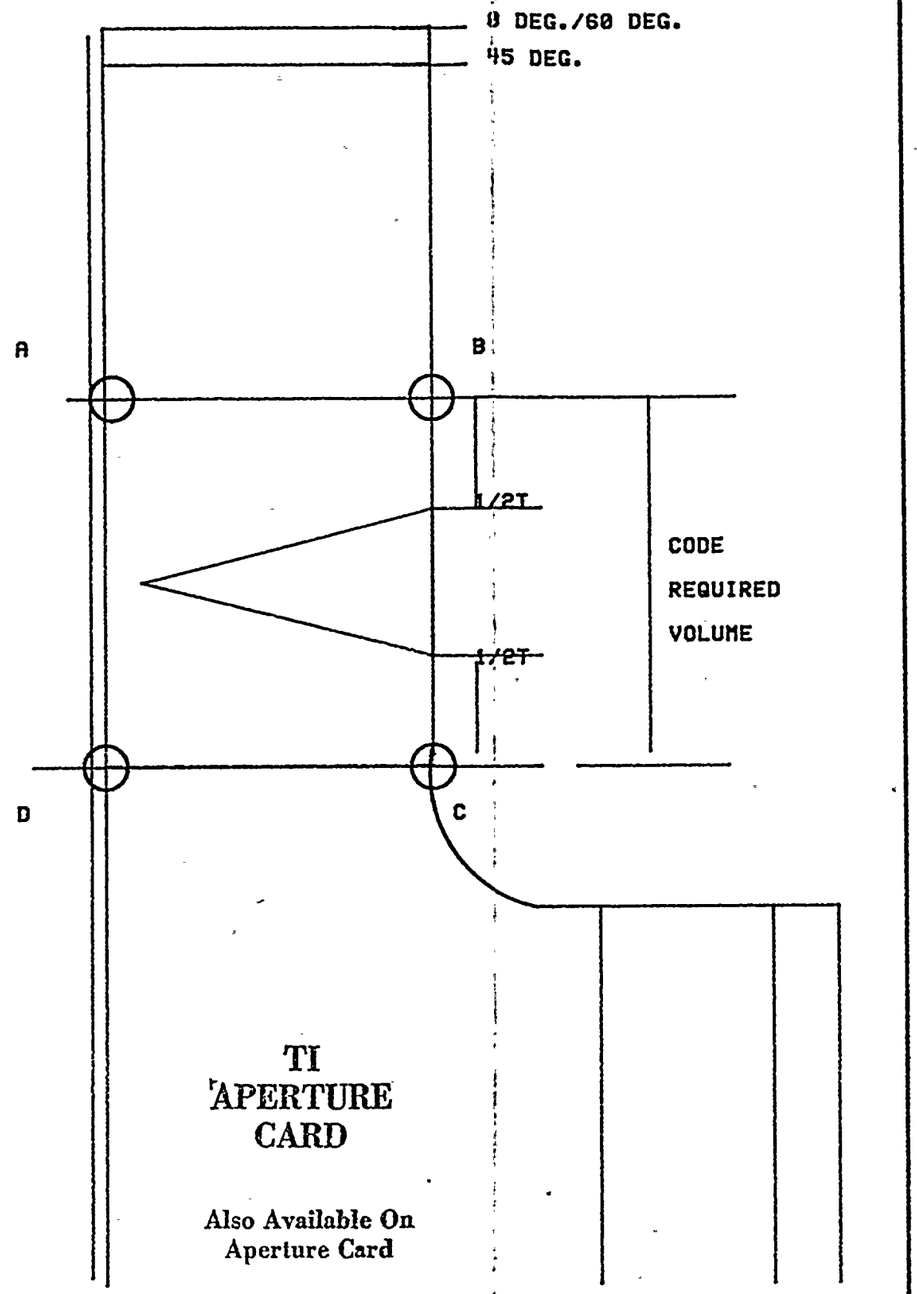

TI
APERTURE
CARD

Also Available On
Aperture Card

REFERENCE DRAWINGS: REV:	PRESSURE & TEMPERATURE STATS	MATERIAL SPECS SIZE SCH TYPE	CODES AND PROGRAMS GROUP ST. LUCIE NUCLEAR PLANT
	DESIGN PSIG: TEMP(F): OPERATING PSIG: TEMP(F): HYDROSTATIC PSIG: TEMP(F):	UT CALIBRATION BLOCK:	TITLE: RPV CLOSURE HEAD EXAM RELIEF REQUEST NO. 2 DATE: 8/5/87 ZONE: 02 REV. 0 | APPROVED BY: E. L. ANDERSON | DRAWING NUMBER: 001-CH

8709090272-06

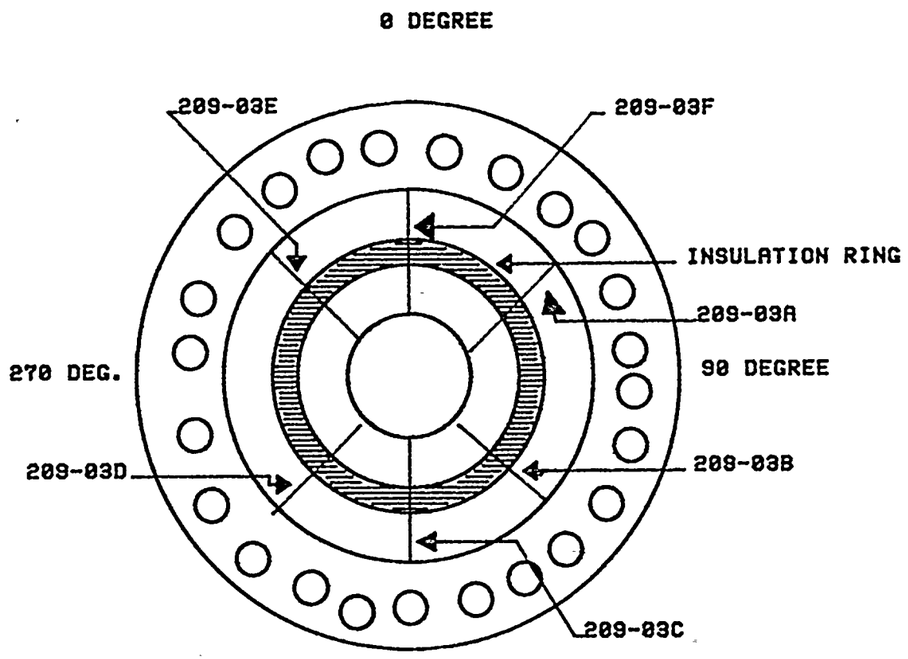

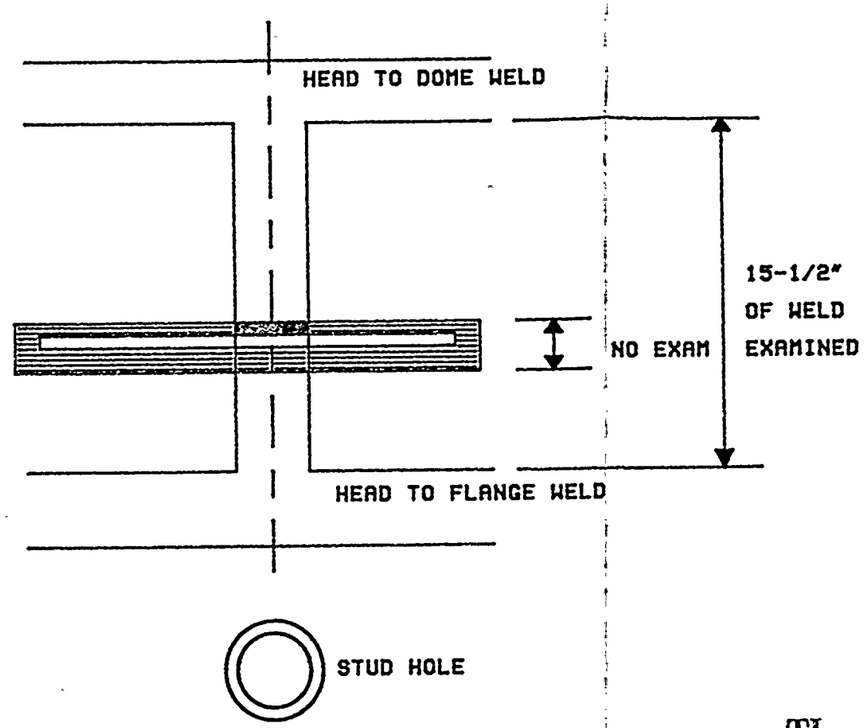

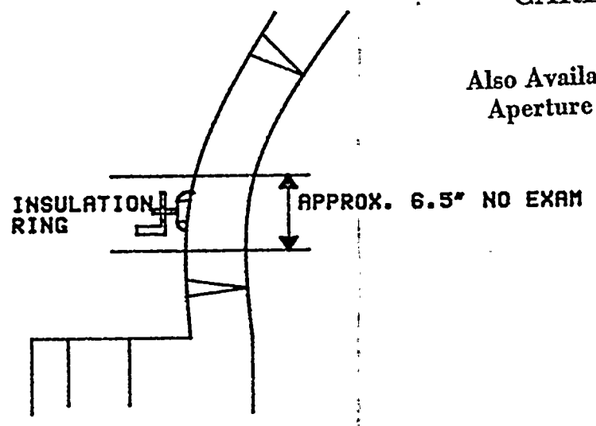

TI
APERTURE
CARD

Also Available On
Aperture Card

REFERENCE DRAWINGS: REV:	PRESSURE & TEMPERATURE STATS	MATERIAL SPECS SIZE SCH TYPE	CODES AND PROGRAMS GROUP ST. LUCIE NUCLEAR PLANT UNIT 1
	DESIGN PSIG: TEMP(F): OPERATING PSIG: TEMP(F): HYDROSTATIC PSIG: TEMP(F):	UT CALIBRATION BLOCK:	TITLE: RPV CLOSURE HEAD LIMITATIONS RELIEF REQUEST NO. 2 DATE: 8/7/87 ZONE: 02 REV. 0 / APPROVED BY: E. L. ANDERSON / DRAWING NUMBER: 001-CH-1

8709090272-07

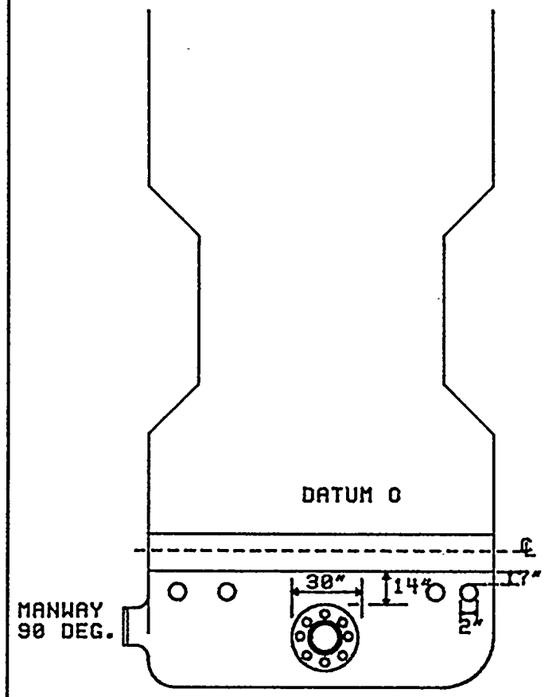

LIMITATIONS; MANWAYS 14" FROM CENTER LINE OF WELD FOR 30" AT 0 & 90 DEG.
(4) I" LINES LOCATED CW AT 31", 49", 39' AND 40';

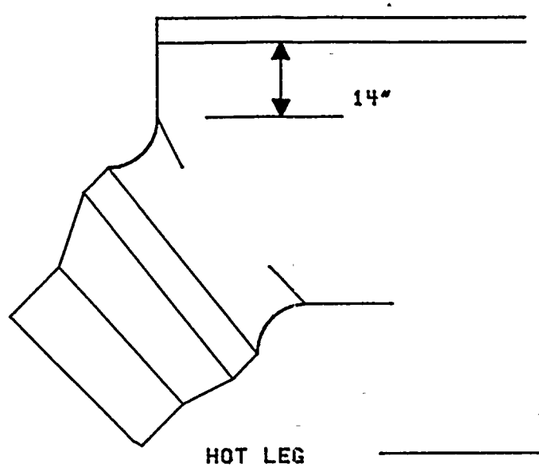

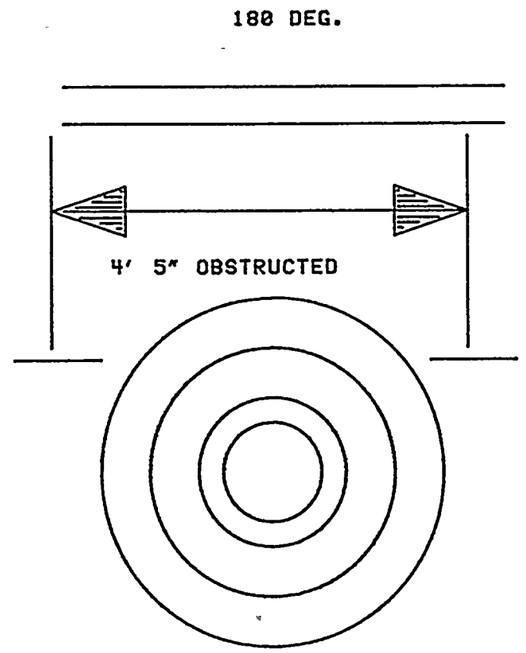

LIMITATIONS: 4' 5" OF SCAN PATH OBSTRUCTED DUE TO HOT LEG NOZZLE LOCATED AT THE 180 DEGREES (22' DATUM 14" FROM WELD EDGE

TI APERTURE CARD

Also Available On Aperture Card

REFERENCE DRAWINGS: REV:	PRESSURE & TEMPERATURE STATS	MATERIAL SPECS SIZE SCH TYPE	CODES AND PROGRAMS GROUP ST. LUCIE NUCLEAR PLANT UNIT 1
	DESIGN PSIG: TEMP(F):		TITLE: STEAM GENERATOR LIMITATIONS RELIEF REQUEST NO. 3
	OPERATING PSIG: TEMP(F):		DATE: 8/7/87 ZONE: 3 & 4
	HYDROSTATIC PSIG: TEMP(F):	UT CALIBRATION BLOCK:	REV. 0 | APPROVED BY: E. L. ANDERSON | DRAWING NUMBER: 001-SG

8709090272-08

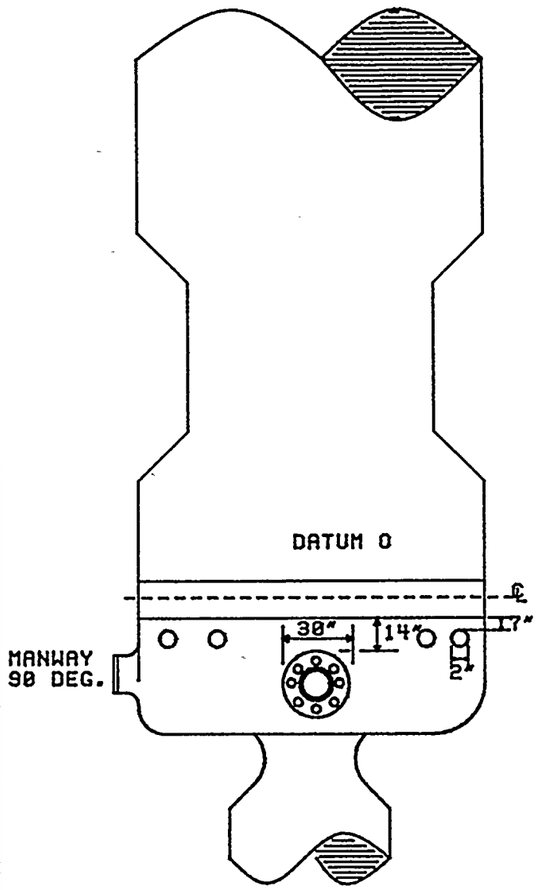

STAY BASE

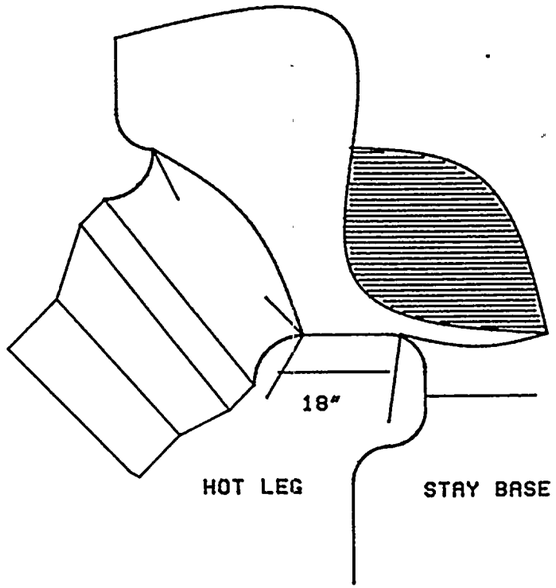

HOT LEG: STAY BASE TO PRIMARY HEAD IN WAY OF SCAN 18" FROM WELD CENTER LINE FOR 28"

COLD LEGS: BOTH 15" AREAS ON UNDER SIDE OF COLD LEGS COVER FROM 9' TO 13'

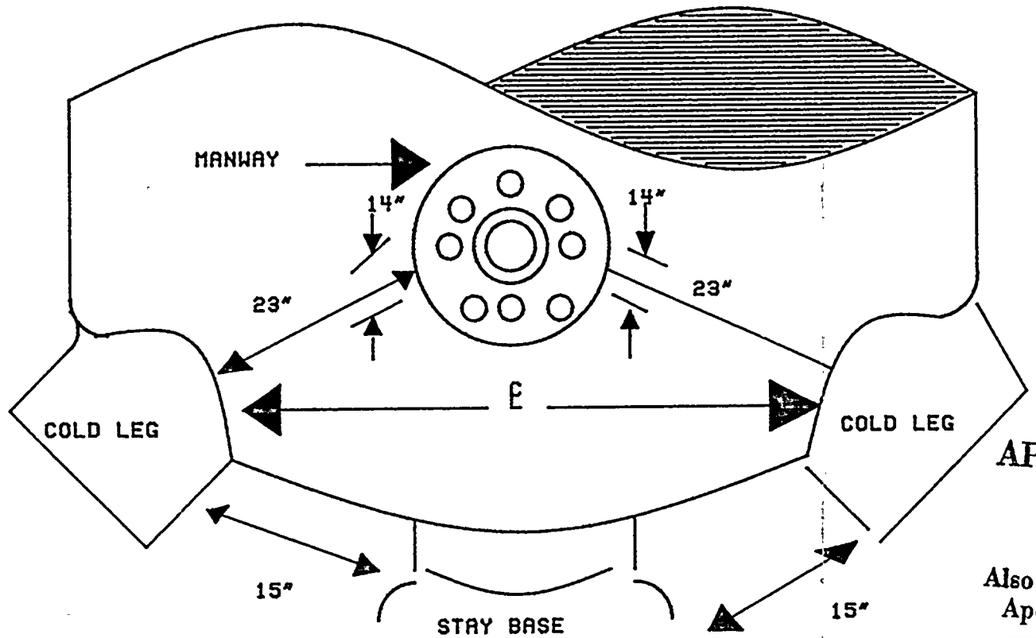

TI APERTURE CARD

Also Available On Aperture Card

REFERENCE DRAWINGS: REV:	PRESSURE & TEMPERATURE STATS	MATERIAL SPECS SIZE SCH TYPE	CODES AND PROGRAMS GROUP ST. LUCIE NUCLEAR PLANT UNIT 1
	DESIGN PSIG: TEMP(F):		TITLE: STEAM GENERATOR LIMITATIONS RELIEF REQUEST NO. 3
	OPERATING PSIG: TEMP(F):		DATE: 8/7/87 ZONE: 3 & 4
	HYDROSTATIC PSIG: TEMP(F):	UT CALIBRATION BLOCK:	REV. 0 / APPROVED BY: E. L. ANDERSON / DRAWING NUMBER:001-SG-1

8709090272-09

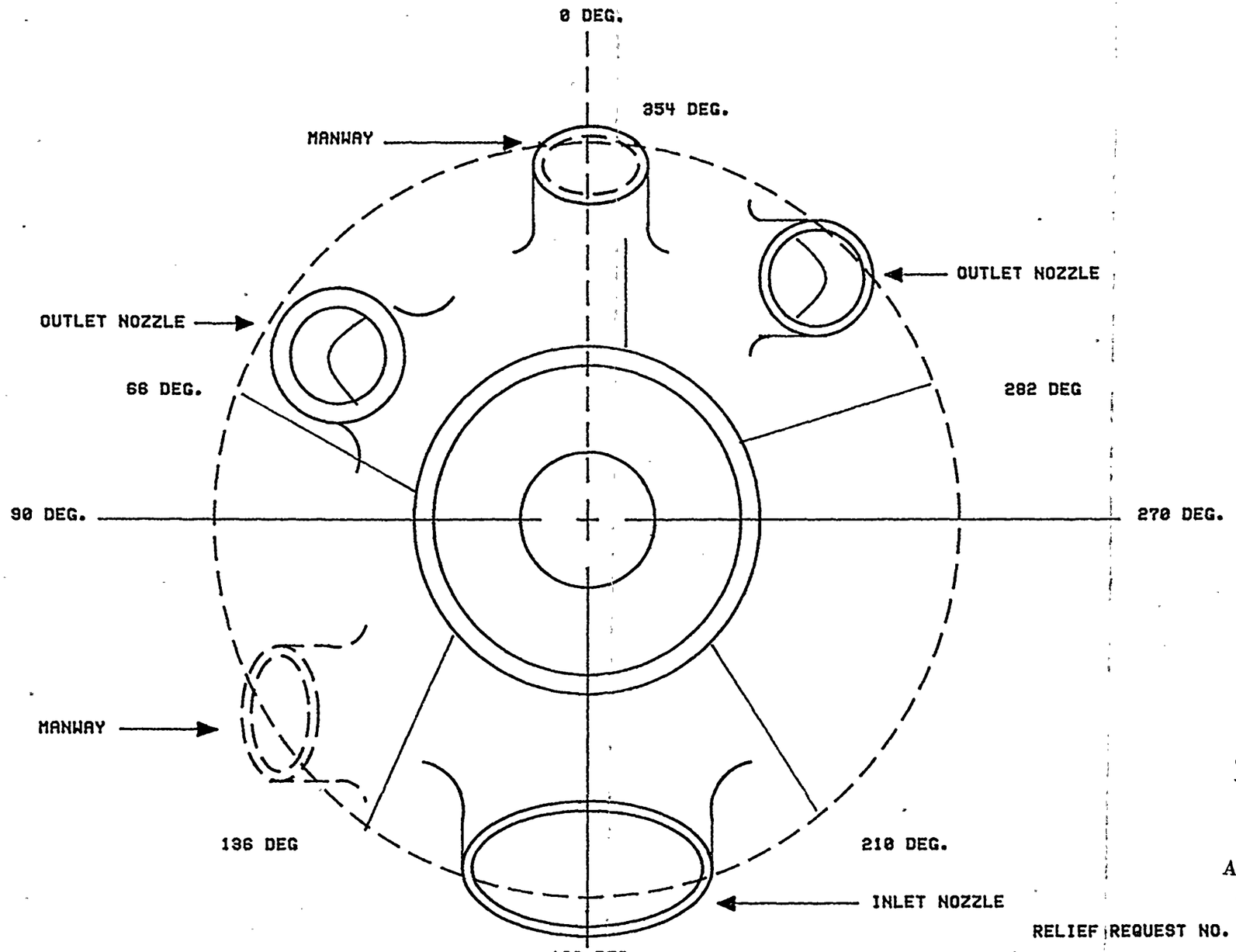

TI
APERTURE
CARD

Also Available On
Aperture Card

RELIEF REQUEST NO. 3

REFERENCE DRAWINGS: REV:	PRESSURE & TEMPERATURE STATS	MATERIAL SPECS SIZE SCH TYPE	CODES AND PROGRAMS GROUP ST. LUCIE NUCLEAR PLANT
	DESIGN PSIG: TEMP(F): OPERATING PSIG: TEMP(F): HYDROSTATIC PSIG: TEMP(F):	UT CALIBRATION BLOCK:	TITLE: STEAM GENERATOR PRIMARY HEAD OUTLINE AND WELD LOCATION DATE: 8/12/87 ZONE: 3 & 4 REV. 0 / APPROVED BY: E. L. ANDERSON / DRAWING NUMBER: 001-SG-2

8709090272-16

FPL

FLORIDA POWER & LIGHT COMPANY

ST. LUCIE NUCLEAR PLANT UNIT NO. 1

SUMMARY OF INCOMPLETE EXAMINATIONS

PROGRAM ITEM NO.	IDENTIFICATION NUMBER	DESCRIPTION	ASME CODE		DESCRIPTION OF LIMITATION	REL REQ	FIG. NO.	REMARKS
			ITEM NO.	CATEGORY				
ZONE 1	205-05 205-10	OUTLET NOZ. TO SHELL WELD	B3.90 B3.100	B-D	0-80.0% 45-46.1% 60-28.3% 45T-72.0% 60T-72.0% 15-1.5% 45-1.5%	4	001-PSL NOZ	
	205-01A 205-01B 205-09A 205-09B	INLET NOZ. TO SHELL WELD	B3.90 B3.100	B-D TI APERTURE CARD Also Available On Aperture Card	0-20.0% 45-20.0% 60- 1.0% 45T-0% 60T-0% FROM BORE. 15-2.2% 45-1.6%	4	001-PSL NOZ	

8709090272-

RELIEF REQUEST NO. 4

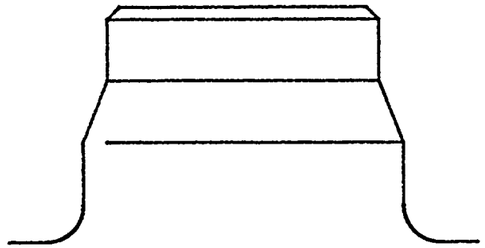

OUTLET NOZZLE

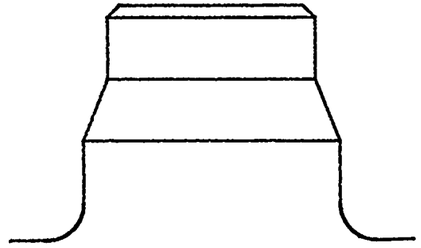

INLET NOZZLE

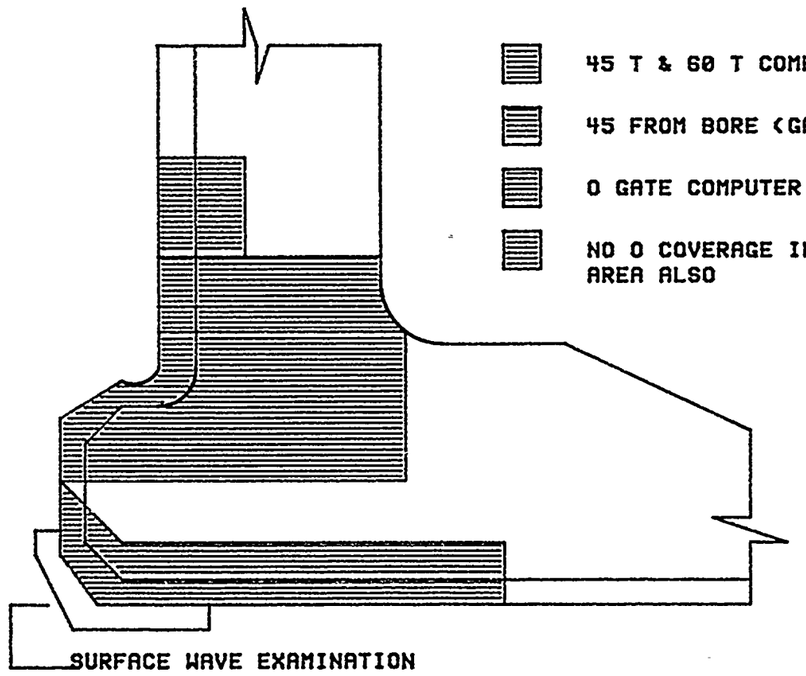

OUTLET NOZZLE LIMITATIONS

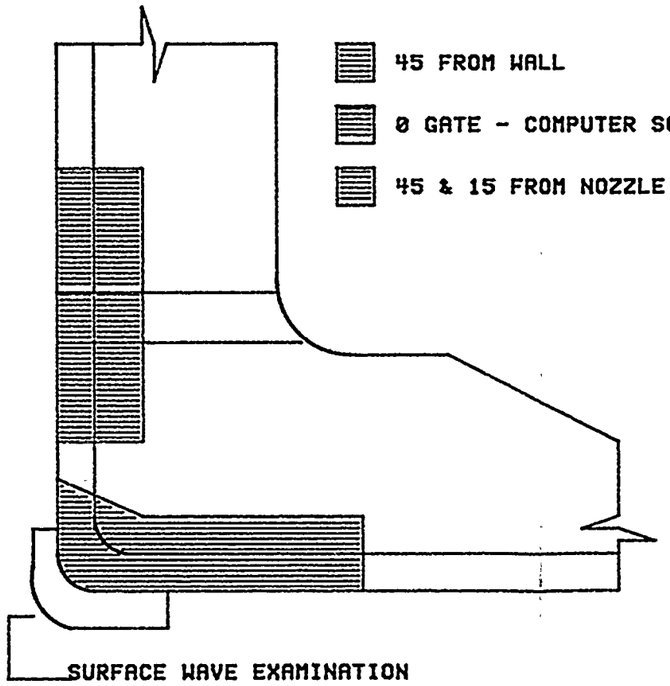

INLET NOZZLE LIMITATIONS

TI APERTURE CARD

Also Available On Aperture Card

REFERENCE DRAWINGS: REV:	PRESSURE & TEMPERATURE STATS	MATERIAL SPECS SIZE SCH TYPE	CODE AND PROGRAMS GROUP ST. LUCIE POWER PLANT
	DESIGN PSIG: TEMP(F):		TITLE: RPV INLET & OUTLET NOZZLE LIMITATIONS
	OPERATING PSIG: TEMP(F):		DATE: 7/30/87 ZONE: 01
	HYDROSTATIC PSIG: TEMP(F):	UT CALIBRATION BLOCK:	REV. 0 / APPROVED BY: E. L. ANDERSON / DRAWING NUMBER: 001-PSLNOZ-A

8709090272-12

NOTE: SCAN PATH OF EACH NOZZLE IS SHOWN BY DOTTED LINES (SCAN PATH = 12" FROM CENTER LINE FOR 0 & 60 DEGREE) (SCAN PATH = 8" FROM WELD CENTER LINE FOR 45 DEGREE)

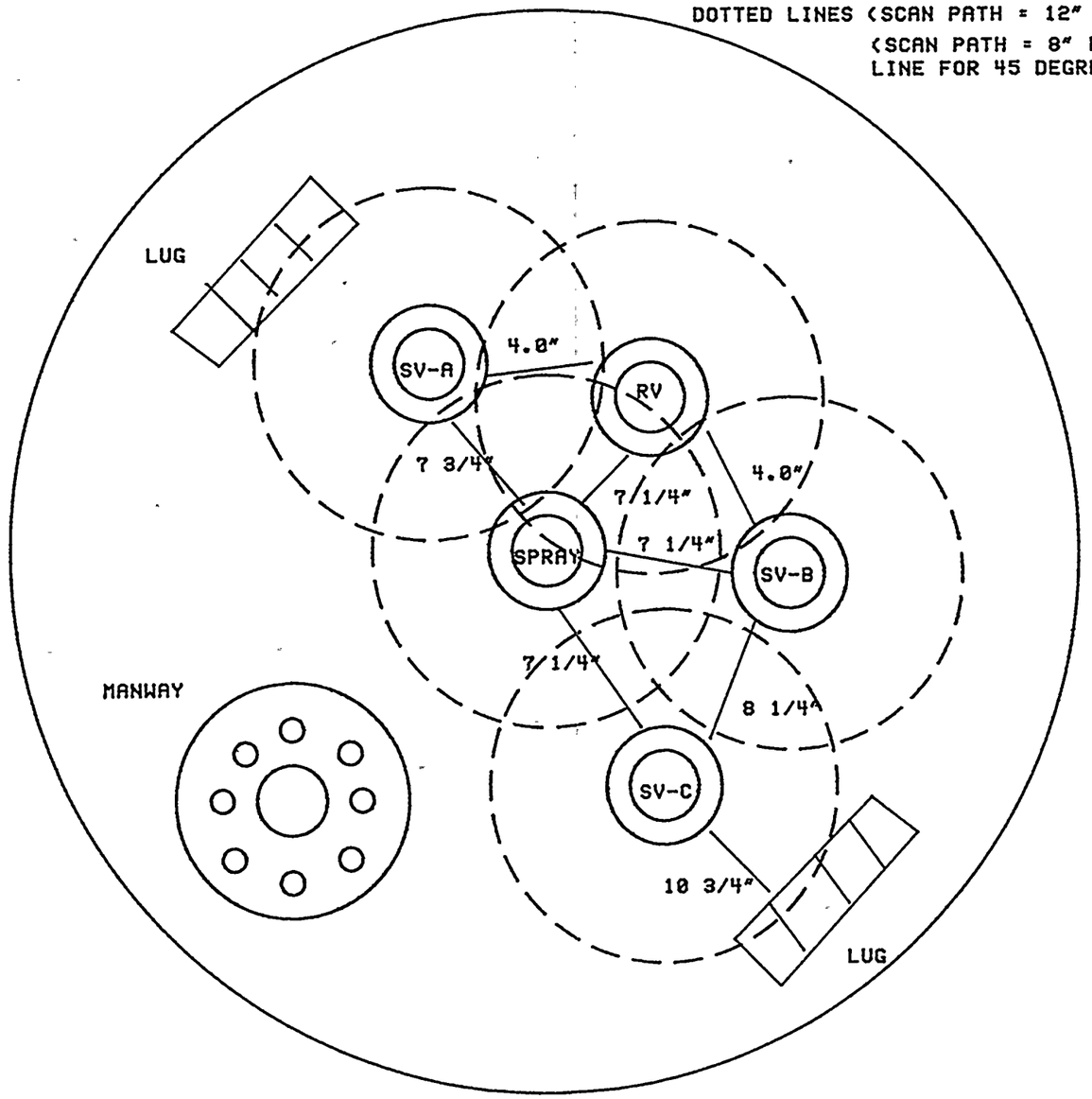

TI APERTURE CARD

Also Available On Aperture Card

REFERENCE DRAWINGS: REV:	PRESSURE & TEMPERATURE STATS	MATERIAL SPECS SIZE SCH TYPE	CODES AND PROGRAMS GROUP ST. LUCIE NUCLEAR PLANT UNIT 1
	DESIGN PSIG: TEMP(F):		TITLE: PRESSURIZER NOZZLE LIMITATIONS RELIEF REQUEST NO. 5
	OPERATING PSIG: TEMP(F):		DATE: 8/7/87 ZONE: 5
	HYDROSTATIC PSIG: TEMP(F):	UT CALIBRATION BLOCK:	REV. 0 / APPROVED BY: E. L. ANDERSON / DRAWING NUMBER: 001-PRZ

8709090272-13

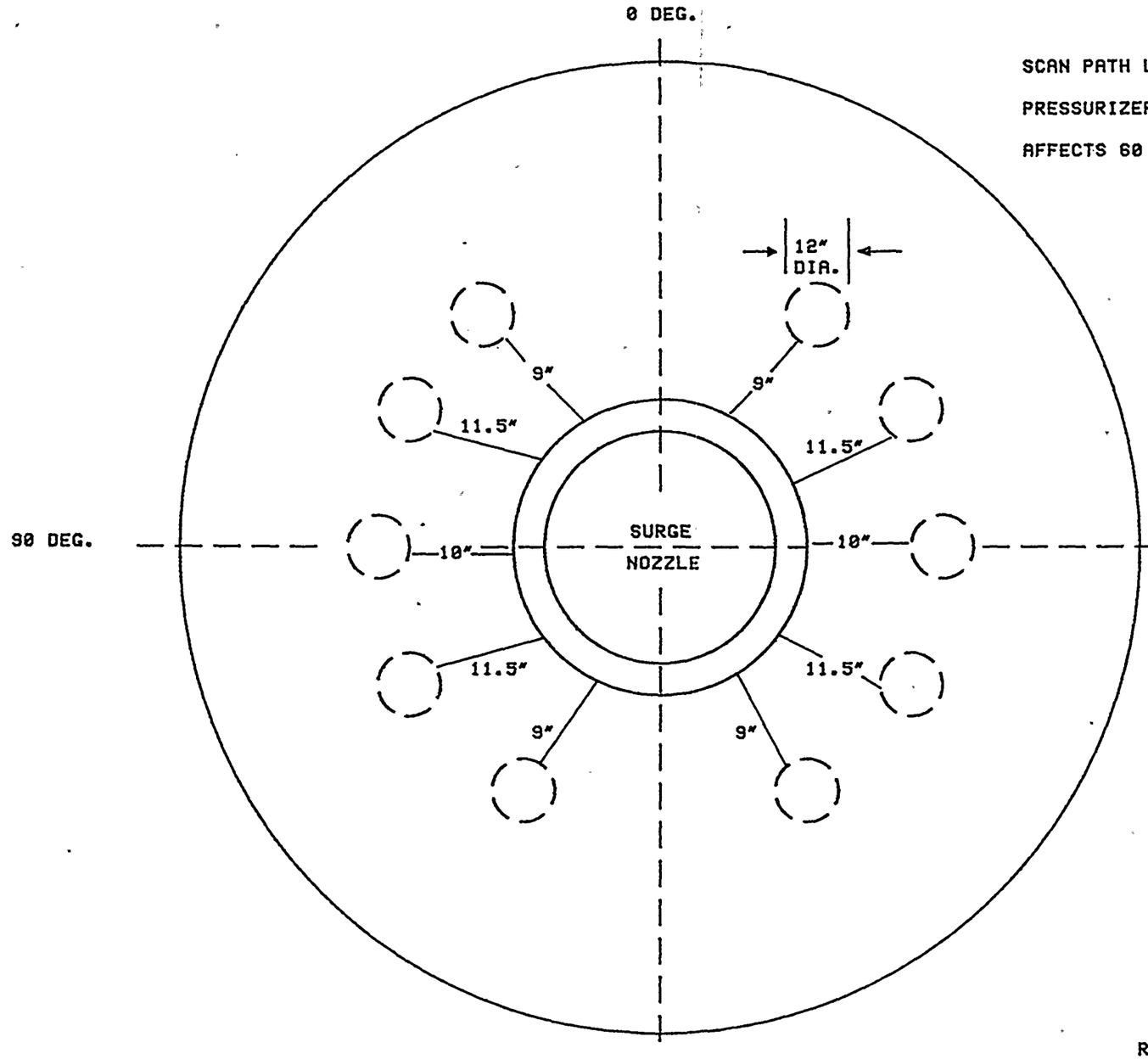

SCAN PATH LIMITED BY 10 PRESSURIZER HEATER PENETRATIONS AFFECTS 60 DGREE ONLY

TI APERTURE CARD

Also Available On Aperture Card

RELIEF REQUEST NO. 5

REFERENCE DRAWINGS: REV:	PRESSURE & TEMPERATURE STATS	MATERIAL SPECS SIZE SCH TYPE	CODES AND PROGRAMS GROUP ST. LUCIE NUCLEAR PLANT UNIT 1
	DESIGN PSIG: TEMP(F):		TITLE: PRESSURIZER BOTTOM HEAD LIMITATIONS
	OPERATING PSIG: TEMP(F):		DATE: 8/7/87 ZONE: 5
	HYDROSTATIC PSIG: TEMP(F):	UT CALIBRATION BLOCK:	REV. 0 / APPROVED BY: E. L. ANDERSON / DRAWING NUMBER: 001-PRZ-1

8709090272-14

SECTION XI - DIVISION 1

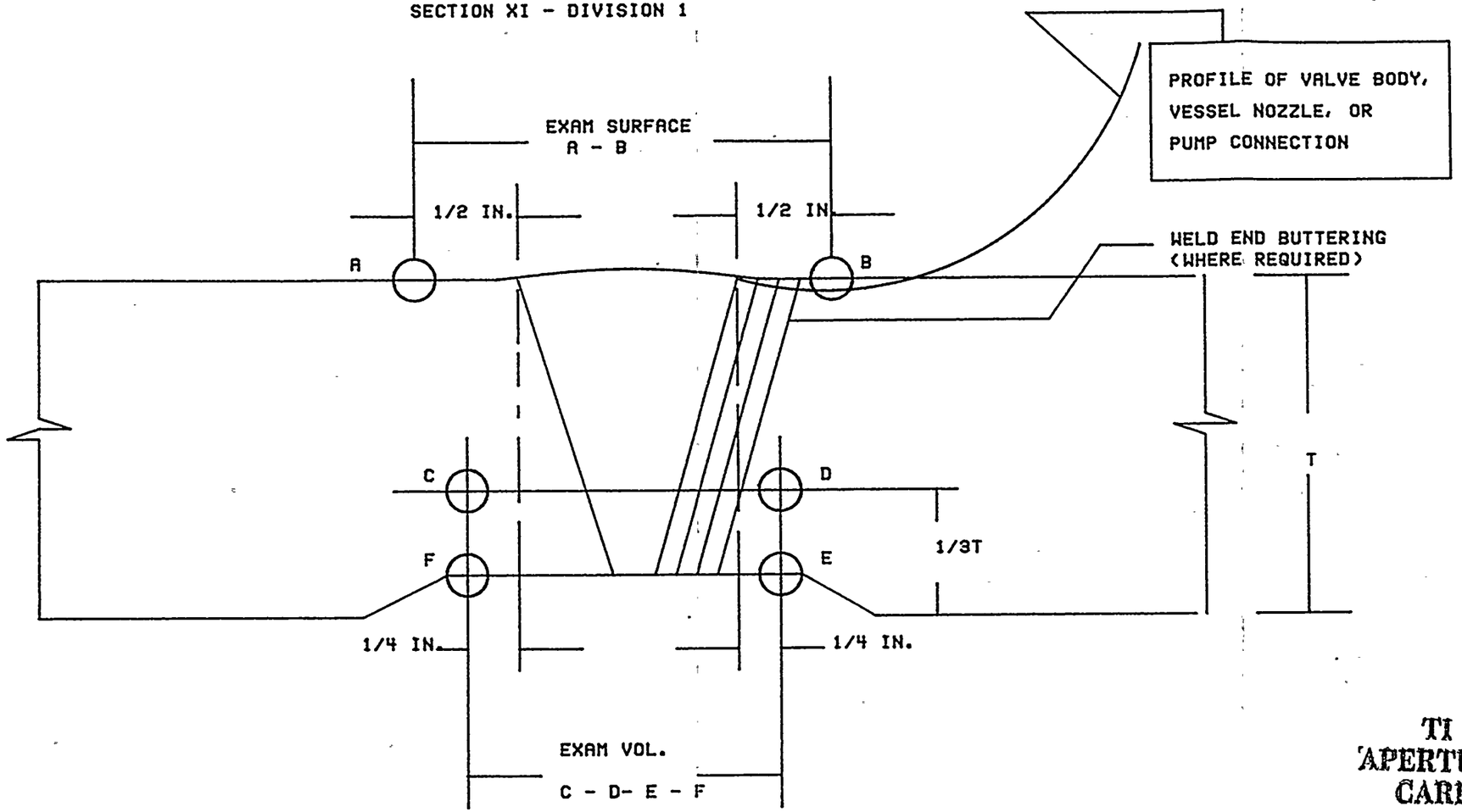

FIGURE IWB-2500-8 (C)

NPS > 4 INCHES

TI APERTURE CARD

Also Available On Aperture Card

REFERENCE: SECTION XI 1983 EDITION

RELIEF REQUEST NO. 6

REFERENCE DRAWINGS: REV:	PRESSURE & TEMPERATURE STATS	MATERIAL SPECS SIZE SCH TYPE	CODES AND PROGRAMS GROUP ST. LUCIE NUCLEAR PLANT
	DESIGN PSIG: TEMP(F): OPERATING PSIG: TEMP(F): HYDROSTATIC PSIG: TEMP(F):	UT CALIBRATION BLOCK:	TITLE: SIMILAR AND DISSIMILAR METAL WELDS IN COMPONENTS AND PIPING DATE: 7/30/87 ZONE: N/A REV. 0 / APPROVED BY: E. L. ANDERSON / DRAWING NUMBER: 001-PIPEBJ

8709090272 - 15

VOLUMETRIC EXAMINATION FROM THE ID SURFACE
IN LIEU OF SURFACE EXAMINATION

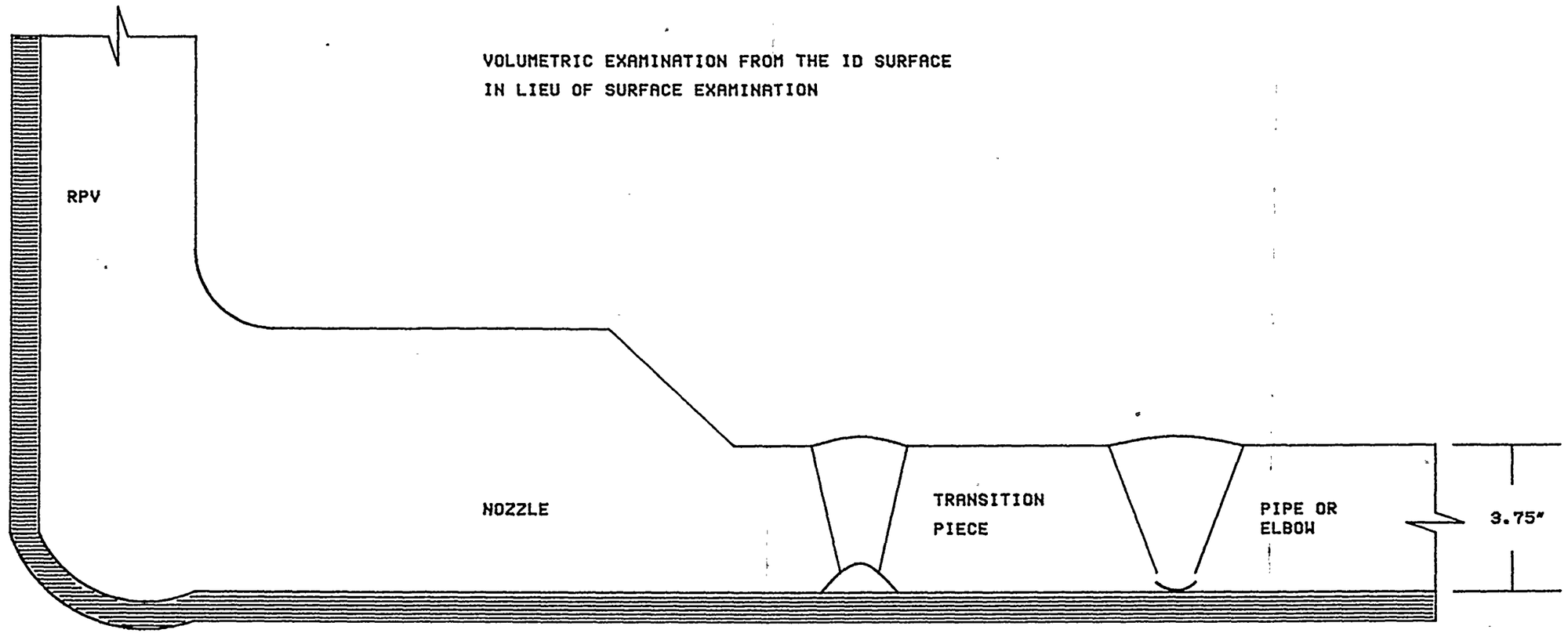

LINES AFFECTED
42"-RC-114
42"-RC-123
30"-RC-115
30"-RC-121
30"-RC-112
30"-RC-124

TI
APERTURE
CARD

Also Available On
Aperture Card

REFERENCE DRAWINGS: REV:	PRESSURE & TEMPERATURE STATS	MATERIAL SPECS SIZE SCH TYPE	CODES AND PROGRAMS GROUP ST. LUCIE NUCLEAR POWER PLANT
	DESIGN PSIG: TEMP(F):		TITLE: TYPICAL WELD CONFIGURATION RELIEF REQUEST NO. 6
	OPERATING PSIG: TEMP(F):		DATE: 7/30/87 ZONE: 01
	HYDROSTATIC PSIG: TEMP(F):	UT CALIBRATION BLOCK:	REV. 0 / APPROVED BY: E. L. ANDERSON / DRAWING NUMBER: 001-PSLNOZ

-2-

8709090272 - 16

BYRON JACKSON TYPE E PUMP DETAIL

HORIZONTAL CROSS SECTION

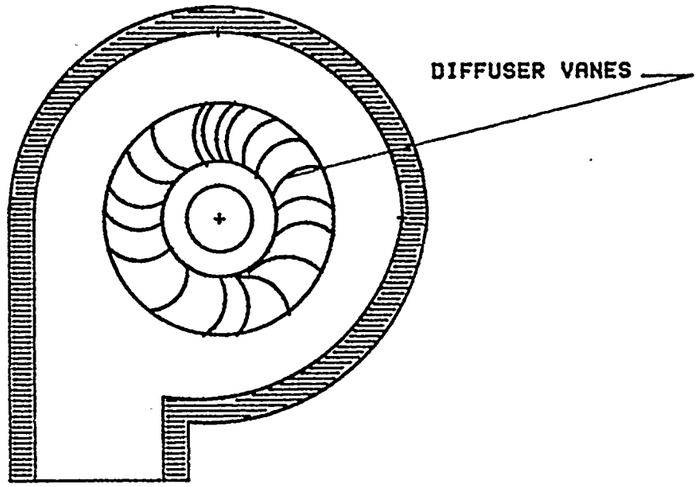

FIGURE NO. 1

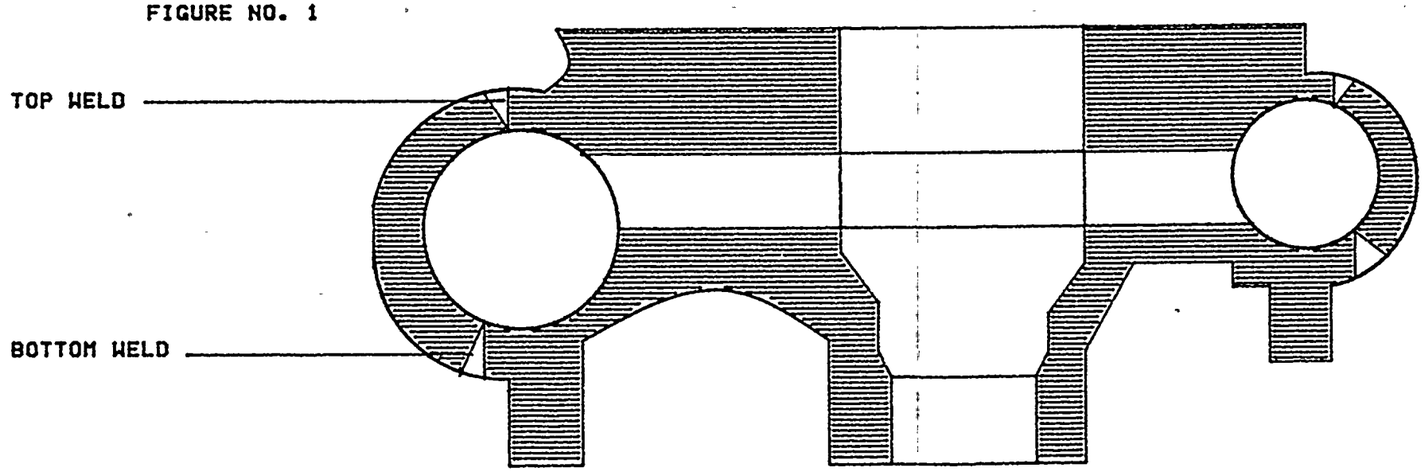

VERTICAL CROSS SECTION

FIGURE NO. 2

FIGURE NO. 3

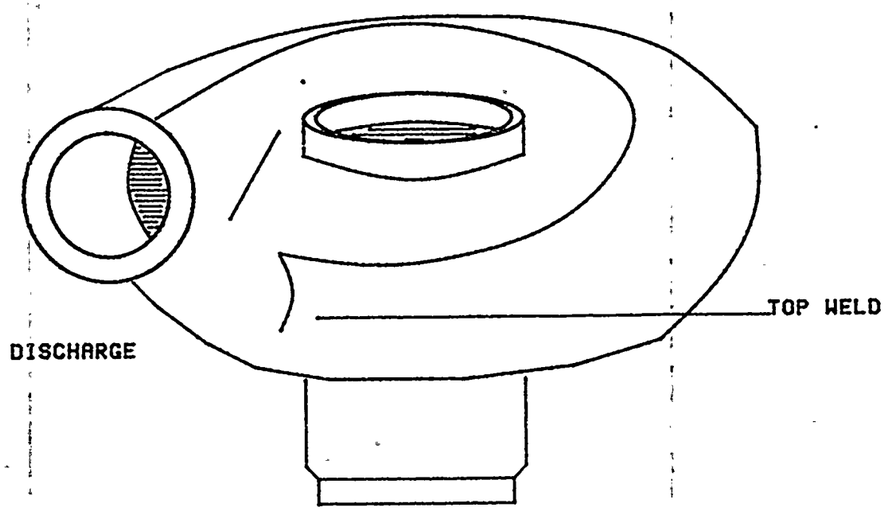

TI
APERTURE
CARD

Also Available On
Aperture Card

REFERENCE DRAWINGS: REV:	PRESSURE & TEMPERATURE STATS	MATERIAL SPECS SIZE SCH TYPE	CODES AND PROGRAMS GROUP ST. LUCIE NUCLEAR PLANT
	DESIGN PSIG: TEMP(F):		TITLE: REACTOR COOLANT PUMP RELIEF REQUEST NO. 7
	OPERATING PSIG: TEMP(F):		DATE: 7/29/87 ZONE: 17/18/19/20
	HYDROSTATIC PSIG: TEMP(F):	UT CALIBRATION BLOCK:	REV. 0 / APPROVED BY: E. L. ANDERSON / DRAWING NUMBER: 001-PSLRCP

8709090272-17

AFFECTED LINES	EXAMINED LINES	SIZE EXEMPT LINES
I-6-CS-23	I-12-CS-11	I-3-CS-35
I-6-CS-22	I-12-CS-10	I-3-CS-34
I-6-CS-29	AND ALL LINES	I-4-CS-31
I-6-CS-28	UPSTREAM	I-4-CS-30
I-6-CS-25		I-4-CS-27
I-6-CS-24		I-4-CS-26
I-6-CS-21		I-4-CS-33
I-6-CS-20		I-4-CS-32
I-6-CS-16		I-3-CS-59
I-6-CS-17		
I-10-CS-13		
I-10-CS-12		
I-12-CS-19		
I-12-CS-11		
I-12-CS-18		
I-12-CS-10		
I-12-SI-406		
I-12-SI-407		

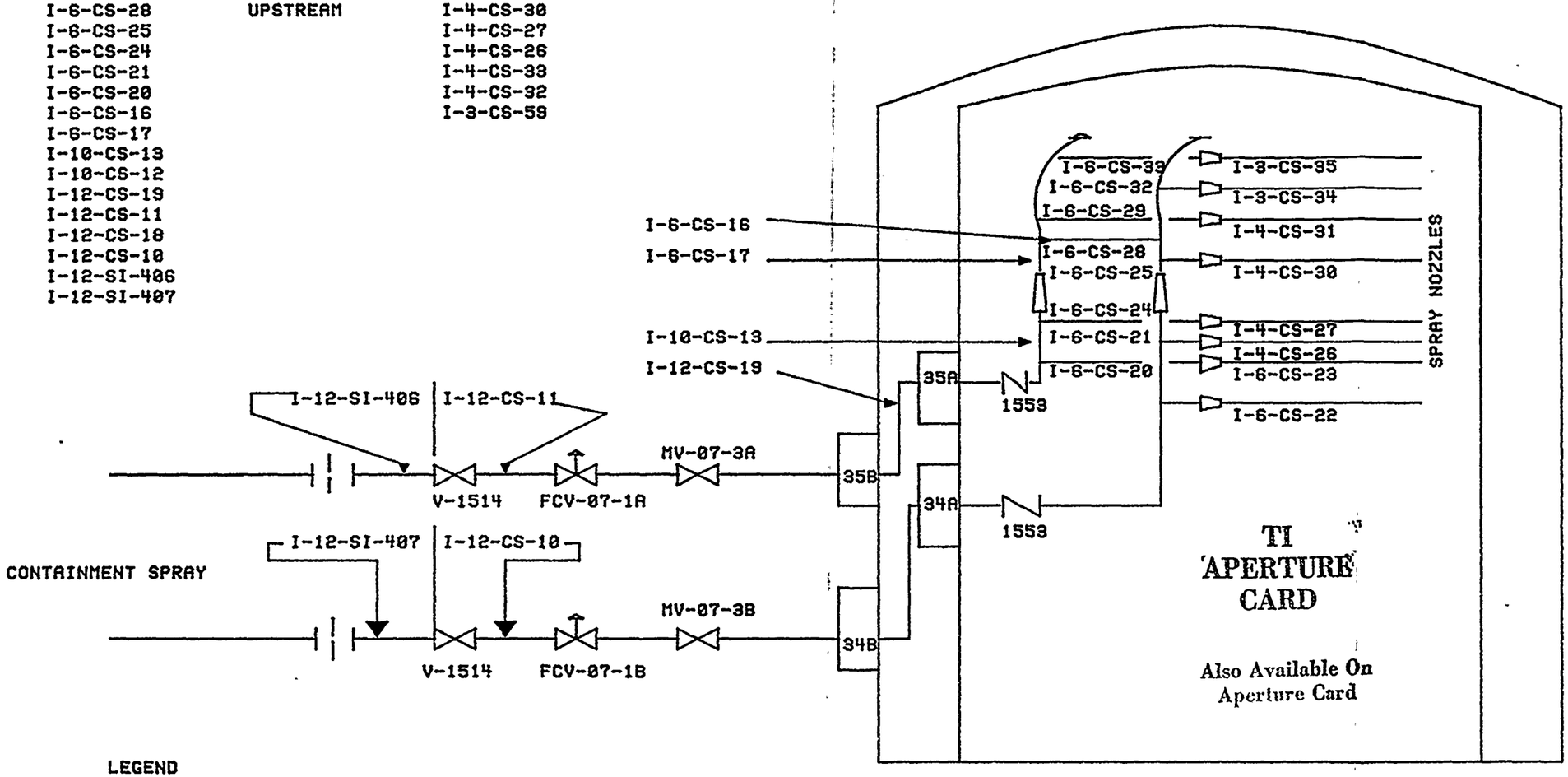

TI
APERTURE
CARD

Also Available On
Aperture Card

LEGEND

- EXAMINED LINES
- AFFECTED LINES
- SIZE EXEMPT LINES

REFERENCE DRAWINGS: REV:	PRESSURE & TEMPERATURE STATS	MATERIAL SPECS SIZE SCH TYPE	CODES AND PROGRAMS GROUP ST. LUCIE NUCLEAR PLANT UNIT 1
8770-E-80311 SHT 2 OF 21 PSL1-CB-005-2	DESIGN PSIG: TEMP(F): OPERATING PSIG: TEMP(F): HYDROSTATIC PSIG: TEMP(F):	UT CALIBRATION BLOCK:	TITLE: CONTAINMENT SPRAY LINES RELIEF REQUEST NO. 9 DATE: 8/11/87 ZONE: N/A REV. 0 / APPROVED BY: E. L. ANDERSON / DRAWING NUMBER: 001-CS

8709090272 - 18

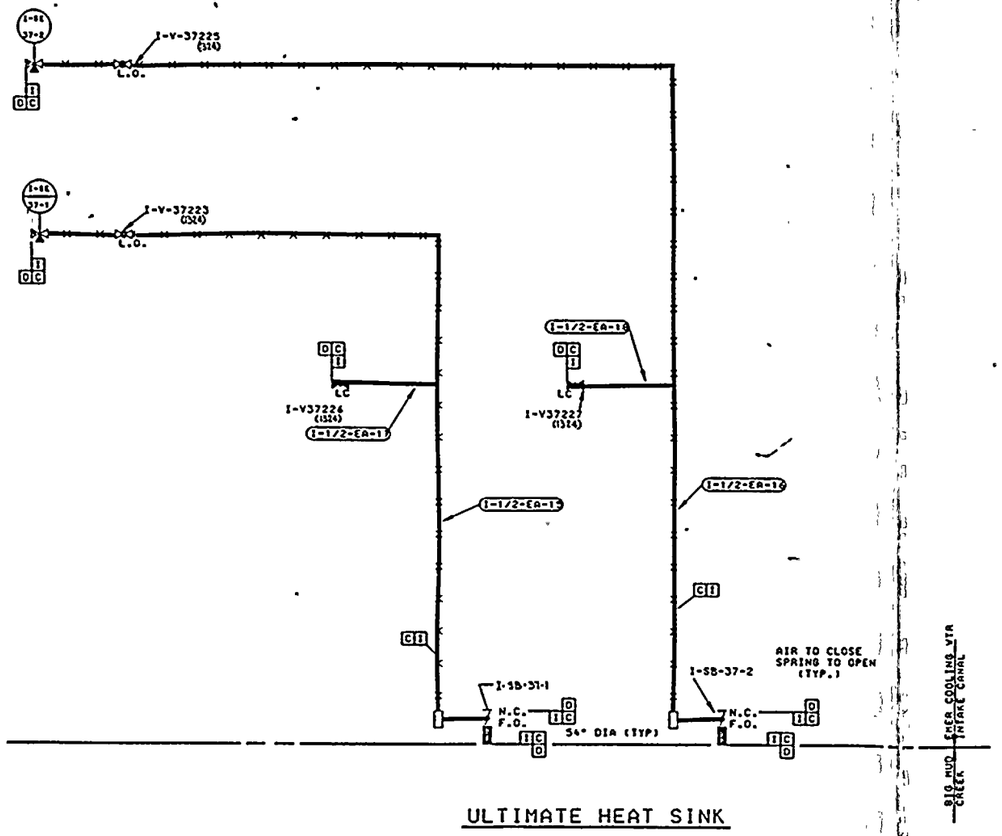

ULTIMATE HEAT SINK

TI APERTURE CARD

Also Available On : Aperture Card

8709090272-19

AUTH	NO	DATE	REVISION	BY	CH	COR	APP
AUTH	1	11/6/86	GENERAL REVISIONS	MC	DWC		

DATE 5/10/82 SCALE

FPL FLORIDA POWER & LIGHT COMPANY

DR LCC ER NO
CH COR
APPROVED C.S. KENT

ST. LUCIE UNIT #1
CODE BOUNDARIES
ULTIMATE HEAT SINK
PSL1-CB-007-1

(SL1,M,-)
SHEET 1 OF 3
8770 E- 80303 CAD
REV NO 1

COMPONENT COOLING SURGE TANK

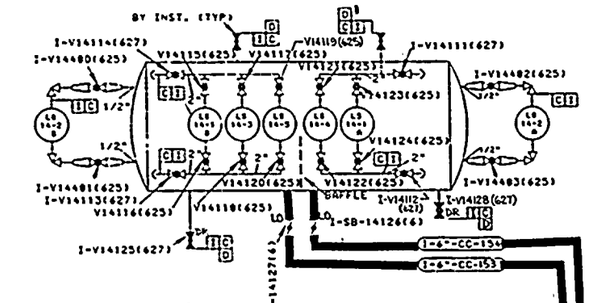

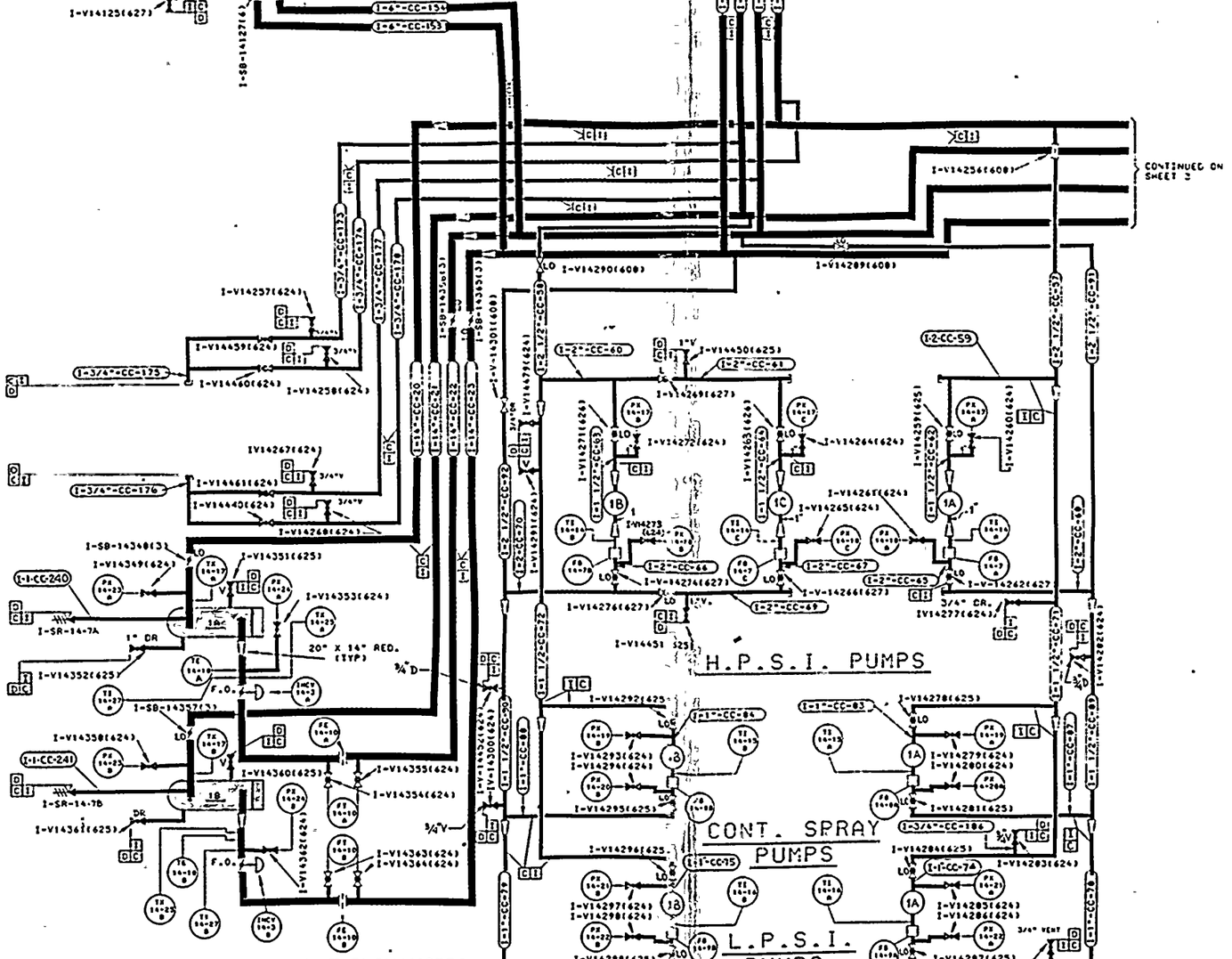

TI APERTURE CARD

Also Available On Aperture Card

8709090272-20

AUTH	NO	DATE	REVISION	BY	CH	COR	APP
	1	9/15/87	TRACING REDRAWN, GENERAL REVISION	SD	DWC		

DATE 3/18/81 SCALE

FPL FLORIDA POWER & LIGHT COMPANY

CR LCC | ER NO
CH | COR
APPROVED C.S. KENT

ST. LUCIE UNIT #1
CODE BOUNDARIES
COMPONENT COOLING WATER SYSTEM
PSL1-CB-007-2

(SL1,M,-)
8770-E-80303 CAD
SHEET 2 OF 3
REV NO 1

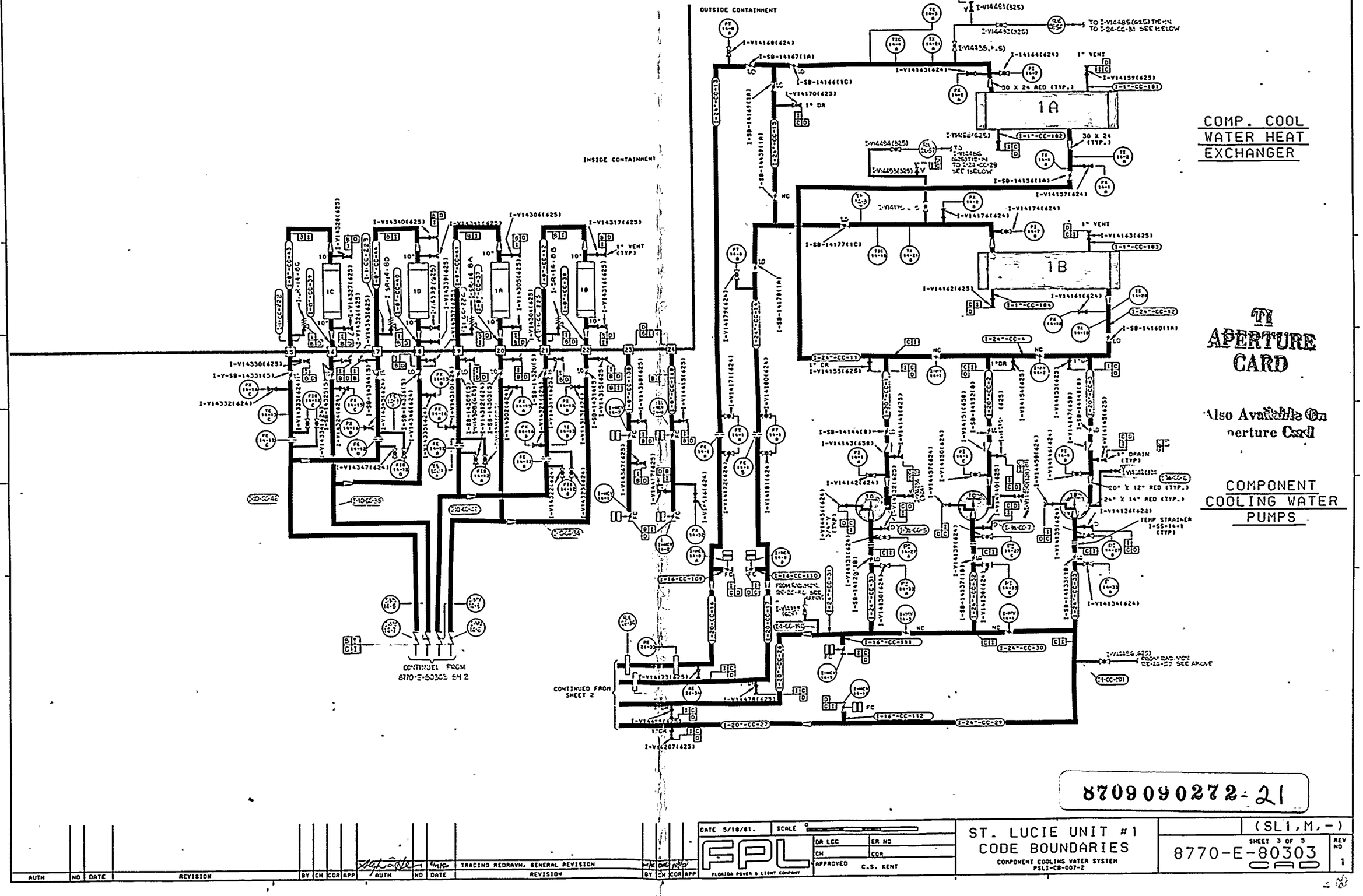

TI APERTURE CARD

Also Available On Aperture Card

8709090272-21

AUTH	NO	DATE	REVISION	BY	CH	COR	APP
AUTH	NO	DATE	REVISION	BY	CH	COR	APP
	1	4/15/82	TRACING REDRAWN, GENERAL REVISION				

DATE 5/18/81. SCALE 0

FPL FLORIDA POWER & LIGHT COMPANY

DR LCC | ER NO
CH | COR
APPROVED C.S. KENT

ST. LUCIE UNIT #1
CODE BOUNDARIES
COMPONENT COOLING WATER SYSTEM
PSLI-CB-007-2

(SL1,M,-)

SHEET 3 OF 3
8770-E-80303
CAD

REV NO 1

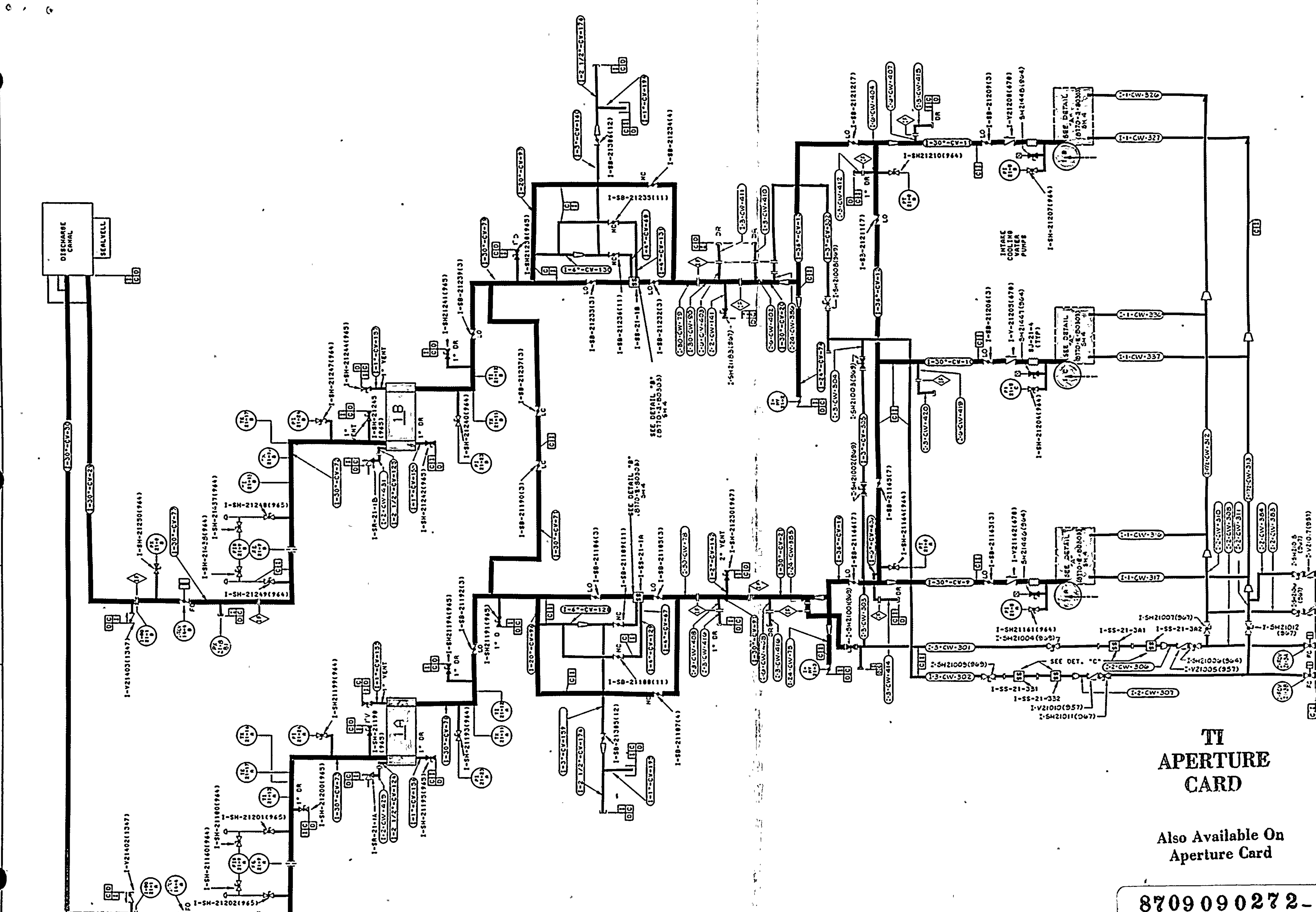

TI
APERTURE
CARD

Also Available On
Aperture Card

8709090272- 22

AUTH	NO	DATE	REVISION	BY	CH	COR	APP
[signature]	1	11/16/86	TRACING REDRAWN, GENERAL REVISIONS	FP	DWC	[initials]	[initials]

DATE 5/18/81 | SCALE
FPL — FLORIDA POWER & LIGHT COMPANY
DR LCC | ER NO
CH | COR
APPROVED C.S. KENT

ST. LUCIE UNIT #1
CODE BOUNDRIES
INTAKE COOLING WATER SYSTEM
PSL1-CB-007-3

(SL1, M, -)
SHEET 5 OF 5
8770-E-80303
REV NO 1
CAD

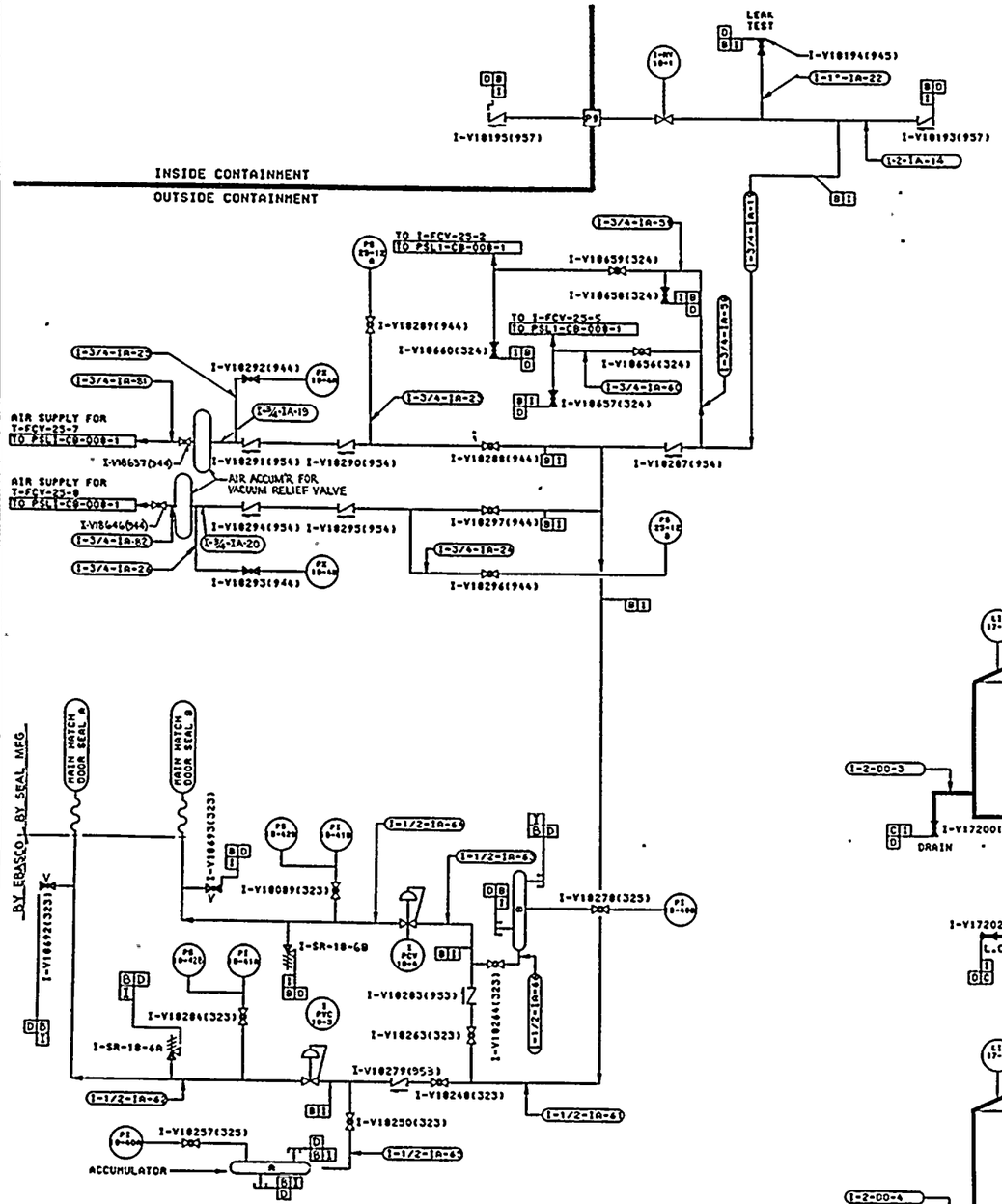

INSTRUMENT AIR SUPPLY
TO CONTAINMENT
AND ANNULUS

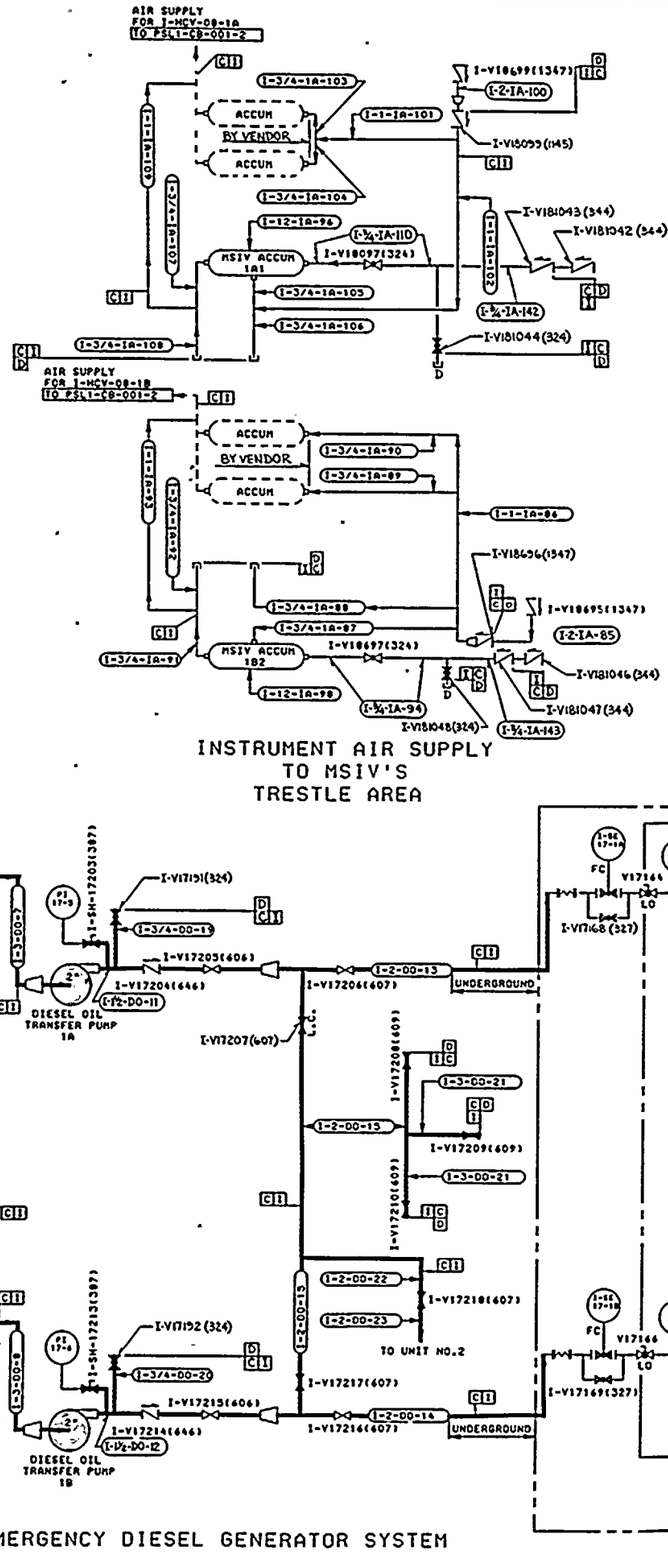

INSTRUMENT AIR SUPPLY
TO MSIV'S
TRESTLE AREA

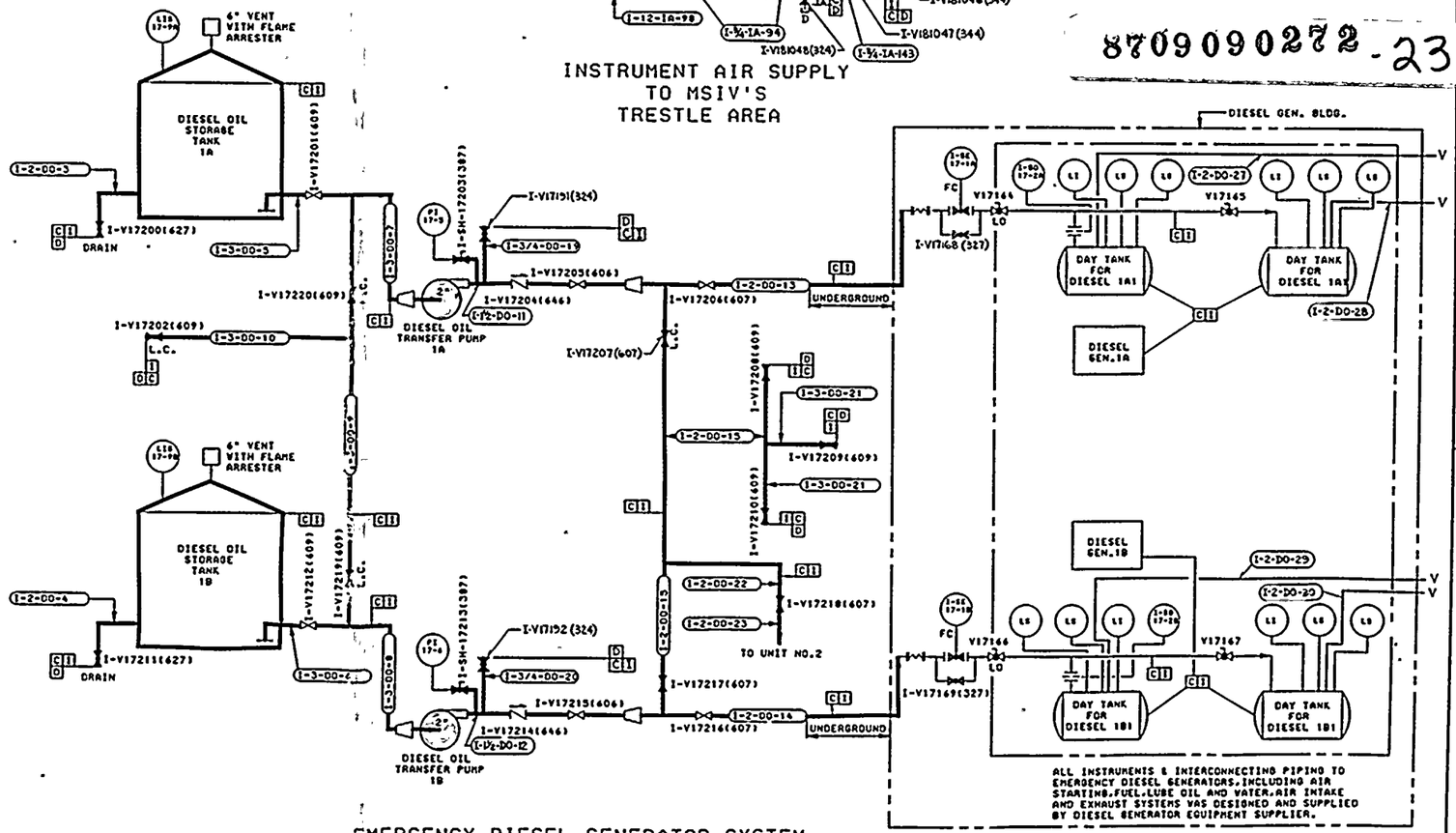

EMERGENCY DIESEL GENERATOR SYSTEM

TI
APERTURE
CARD

Also Available On
Aperture Card

8709090272-23

AUTH	NO	DATE	REVISION	BY	CH	COR	APP
AUTH	1	9/15/87	GENERAL REVISION	SD	DMC		

DATE 5-18-81 | SCALE 0

FPL — FLORIDA POWER & LIGHT COMPANY

DR DAS | ER NO
CH | COR
APPROVED C.S. KENT

ST. LUCIE UNIT #1
CODE BOUNDARIES
MISCELLANEOUS SYSTEMS
PSL1-CB-009-1

(SL1,M,-)

SHEET 1 OF 2

8770-E-80306 CAD

REV NO 1

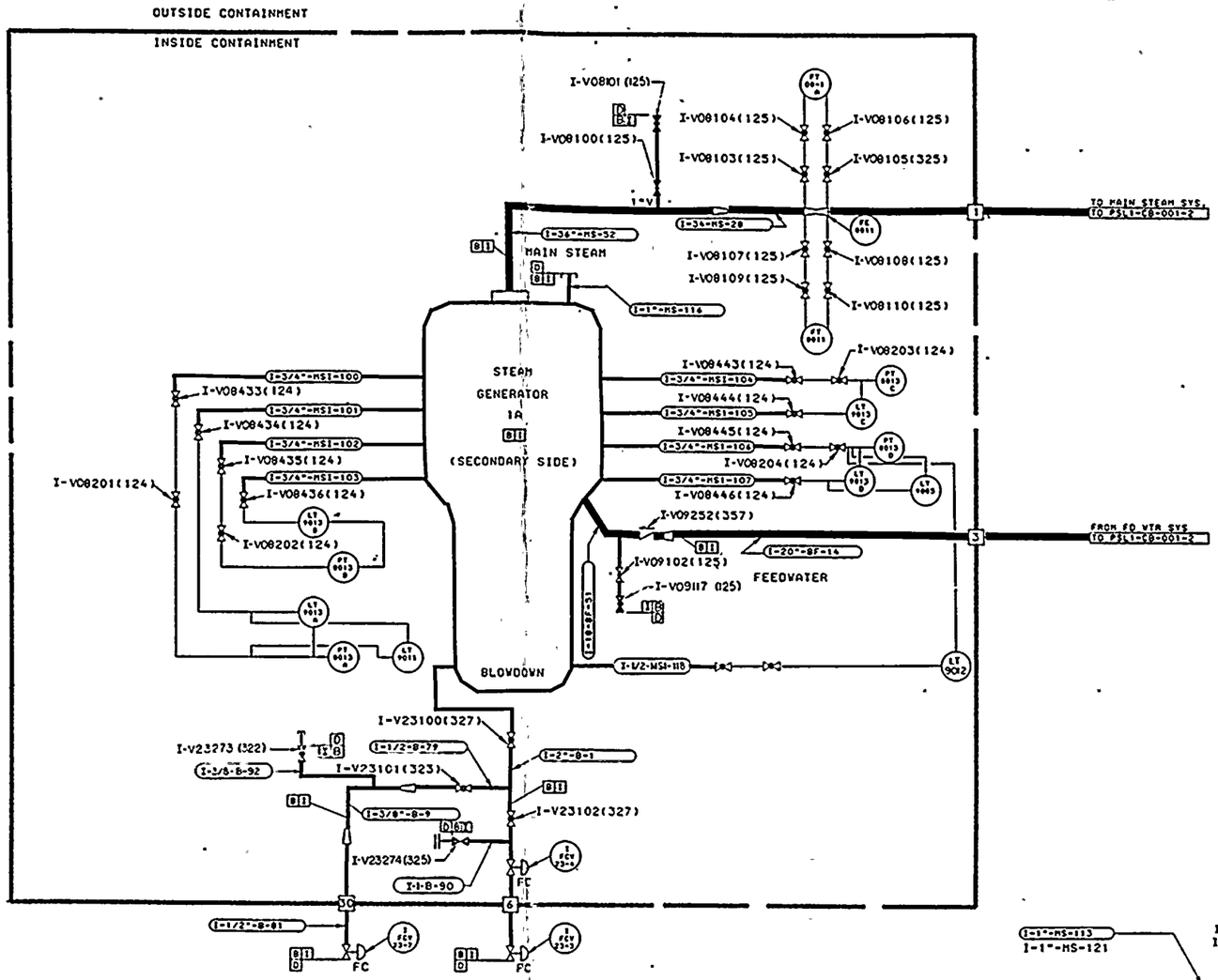

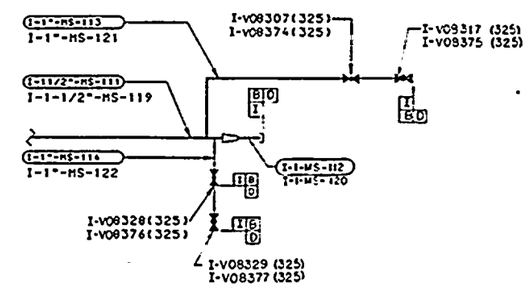

DETAIL A"
MSIV STEAM TRAPS

TI
APERTURE
CARD

Also Available On
Aperture Card

8709090272 - 24

AUTH	NO	DATE	REVISION	BY	CH	COR	APP	AUTH	NO	DATE	GENERAL REVISION / REVISION	BY	CH	COR	APP
									1	7/8/86					

DATE 5-18-81 | SCALE 0

FPL
FLORIDA POWER & LIGHT COMPANY

DR DGB | ER NO
CH | COR
APPROVED C.S. KENT

ST. LUCIE UNIT #1
CODE BOUNDARIES
MAIN STEAM, FEEDWATER, BLOWDOWN
AUXILIARY FEEDWATER AND
CONDENSATE STORAGE SYSTEMS
PSL1-CB-001-1

(SL1,R,-)
SHEET 1 OF 3
8770-E-80307
CAD
REV NO 1

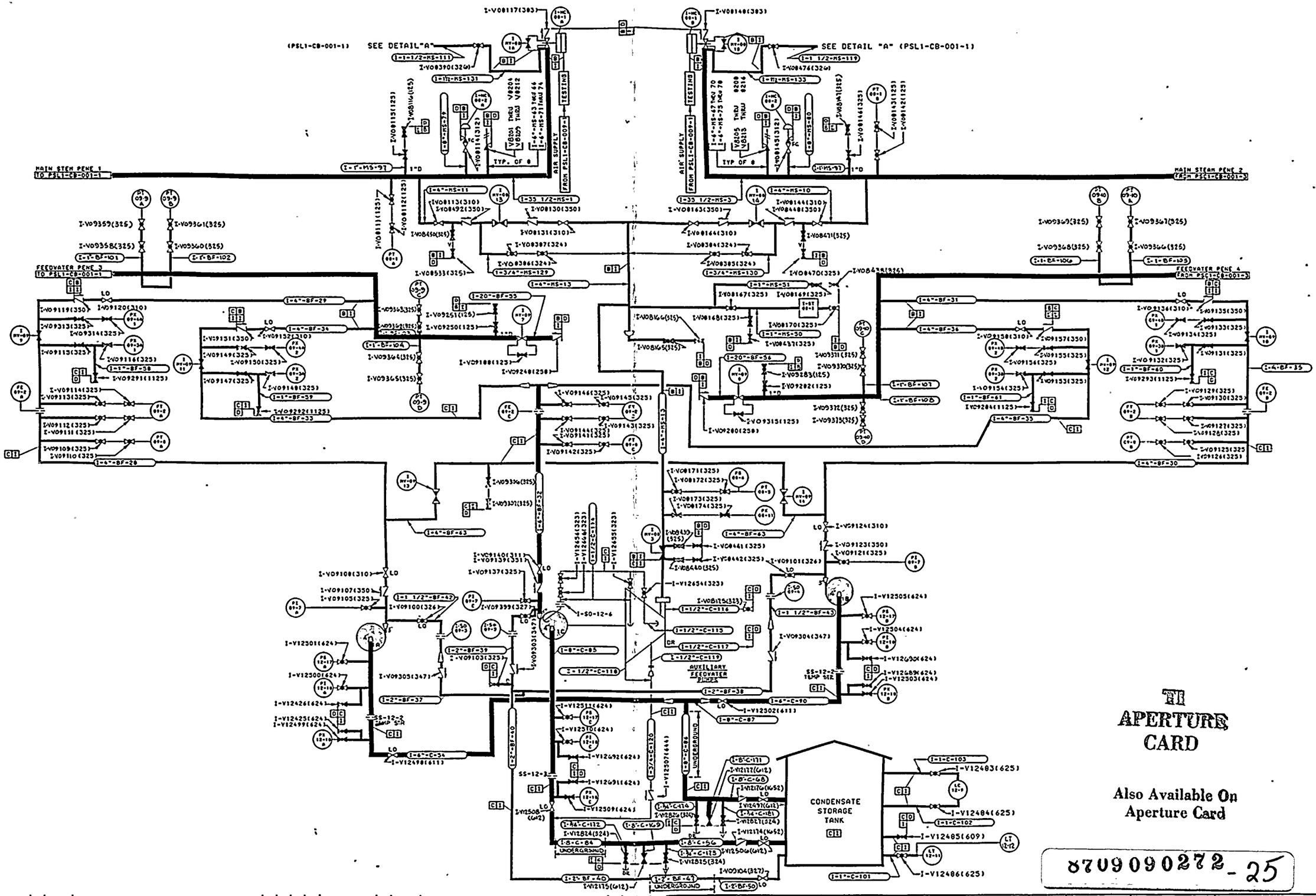

TI APERTURE CARD

Also Available On Aperture Card

8709090272-25

AUTH	NO	DATE	REVISION	BY	CH	COR	APP	AUTH	NO	DATE	GENERAL REVISION	BY	CH	COR	APP
									1	8/18/80					

DATE 5-18-81 SCALE 0

FPL FLORIDA POWER & LIGHT COMPANY

DR DGB ER NO
CH COR
APPROVED C.S. KENT

ST. LUCIE UNIT #1
CODE BOUNDARIES
MAIN STEAM, FEEDWATER, BLOWDOWN
AUXILIARY FEEDWATER AND
CONDENSATE STORAGE SYSTEMS
PSL1-CB-001-2

(PMR, R, -)

SHEET 2 OF 3

8770-E-80307

CAD

REV NO 1

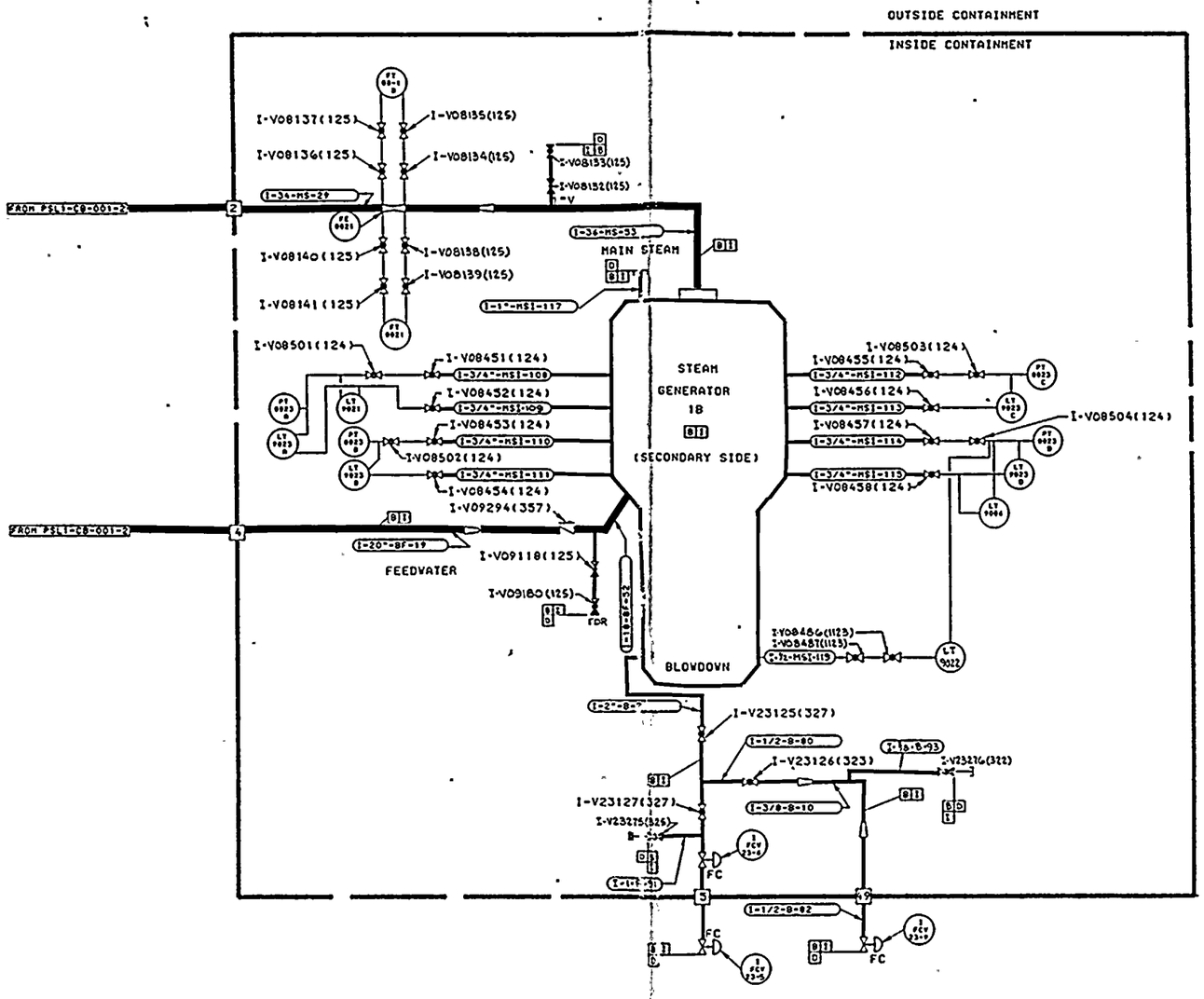

TI
APERTURE
CARD

Also Available On
Aperture Card

8709090272-26

AUTH	NO	DATE	REVISION	BY	CH	COR	APP
AUTH	1	11/6/86	GENERAL REVISION	HC	CH	COR	APP

DATE 5-18-81 | SCALE

FPL FLORIDA POWER & LIGHT COMPANY

DR DGB | ER NO
CH | COR
APPROVED C.S. KENT

ST. LUCIE UNIT #1
CODE BOUNDARIES
MAIN STEAM, FEEDWATER, BLOWDOWN
AUXILIARY FEEDWATER AND
CONDENSATE STORAGE SYSTEMS
PSL1-CB-001-3

(SL1,R,-)
SHEET 3 OF 3
8770-E-80307
CAD
REV NO 1

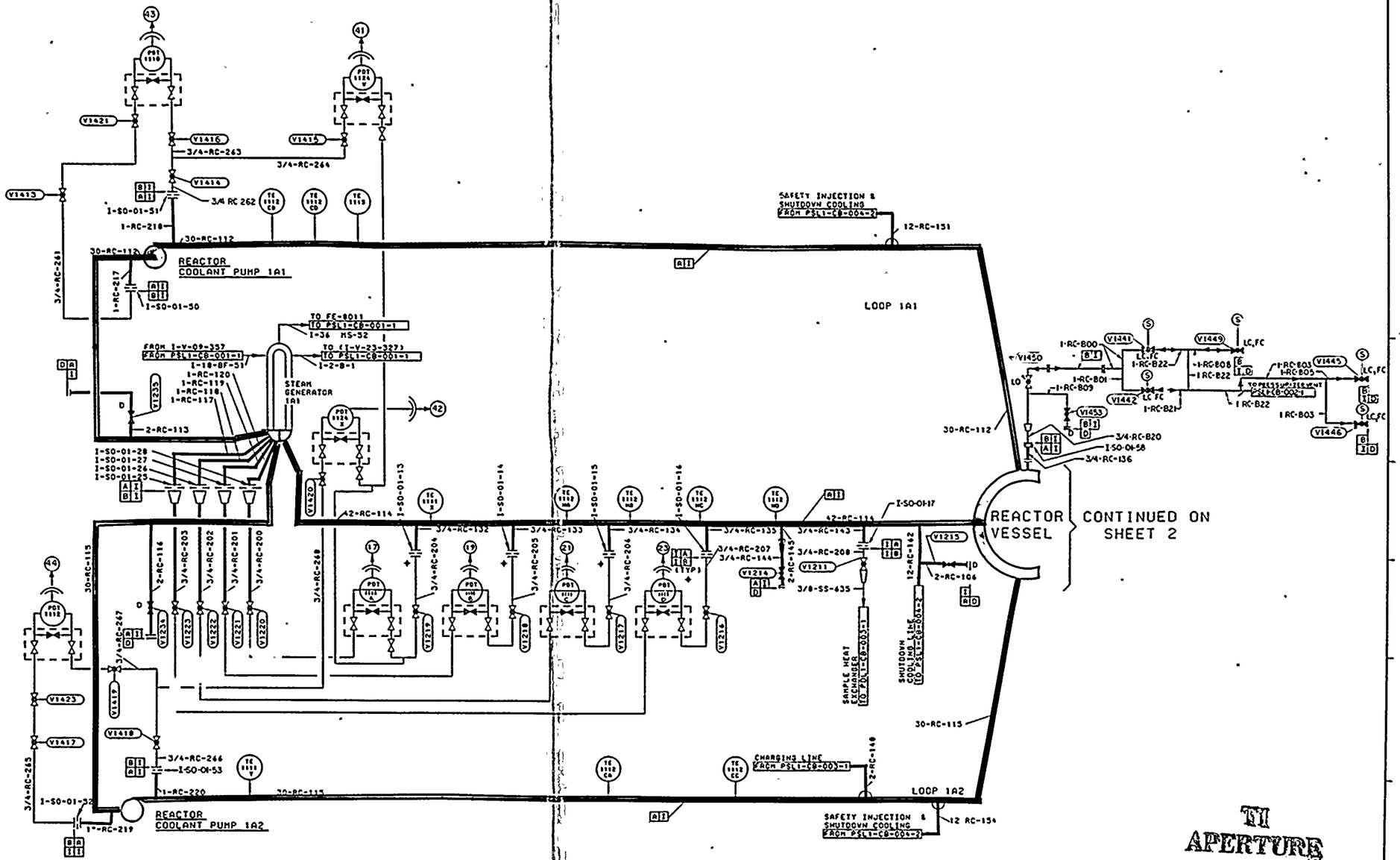

TI APERTURE CARD

Also Available On Aperture Card

AUTH	NO	DATE	REVISION	BY	CH	COR	APP
	1	4/15/82	TRACING REDRAWN, GENERAL REVISION	HC	DWC	[illegible]	[illegible]

DATE 5/18/81 SCALE 0

DR KAB ER NO

CH COR

APPROVED C.S. KENT

FPL FLORIDA POWER & LIGHT COMPANY

ST. LUCIE #1
CODE BOUNDARIES
RE

(SL1,R,-)

SHEET 1 OF 3

E-80308

REV NO 1

8709090272-27

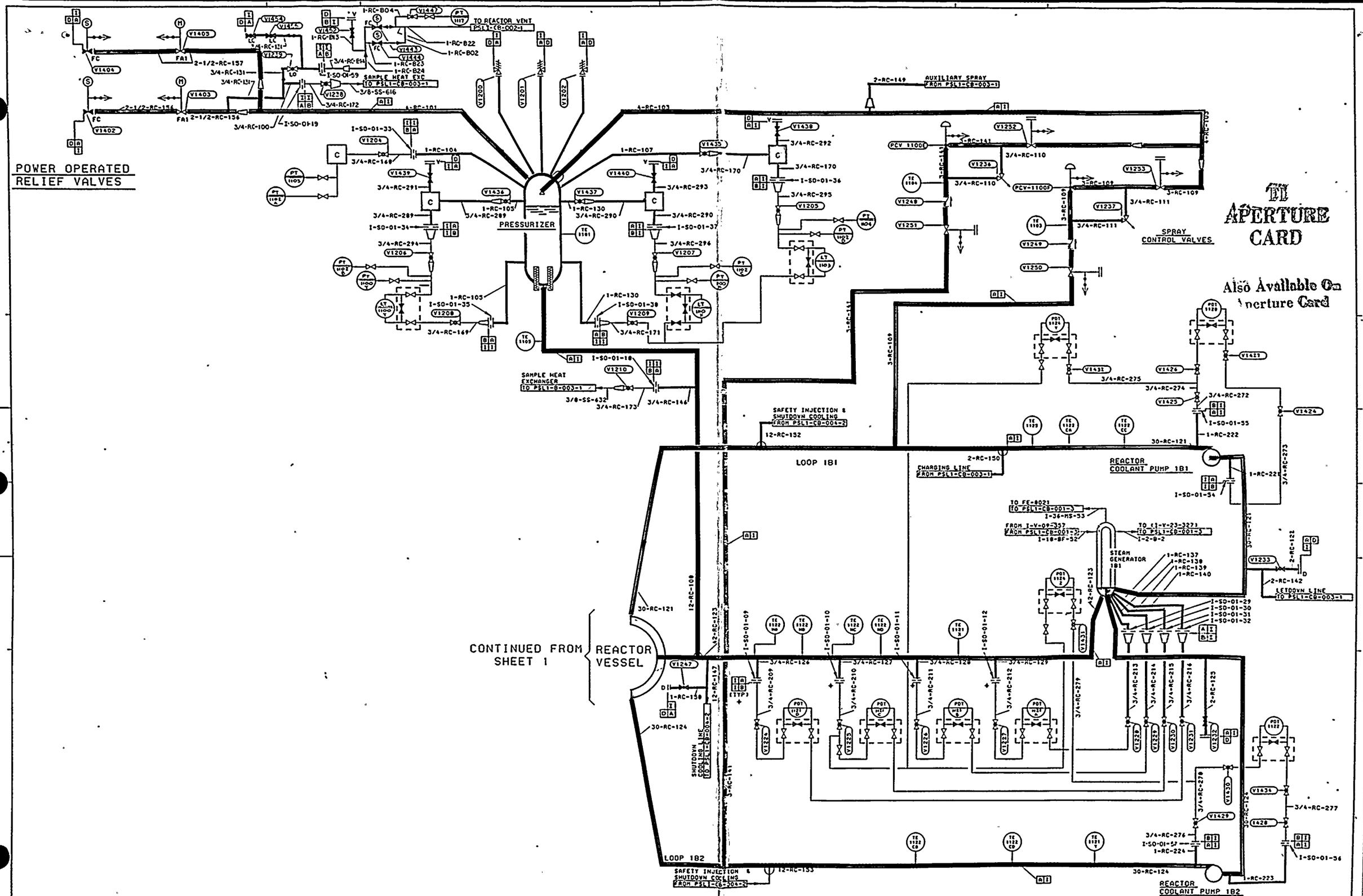

TI APERTURE CARD

Also Available On Aperture Card

8709090272-28

AUTH	NO	DATE	REVISION	BY	CH	COR	APP	AUTH	NO	DATE	REVISION	BY	CH	COR	APP
									1	1/18/80	TRACING REDRAWN, GENERAL REVISION	BC	DWC		

DATE 5/18/81 SCALE

FPL FLORIDA POWER & LIGHT COMPANY

DR KRB ER NO
CH COR
APPROVED C.S. KENT

ST. LUCIE #1
CODE BOUNDARIES
REACTOR COOLANT SYSTEM
PSL1-CB-002-1

(SL1,R,-)

SHEET 2 OF 3

8770-E-80308

CAD

REV NO 1

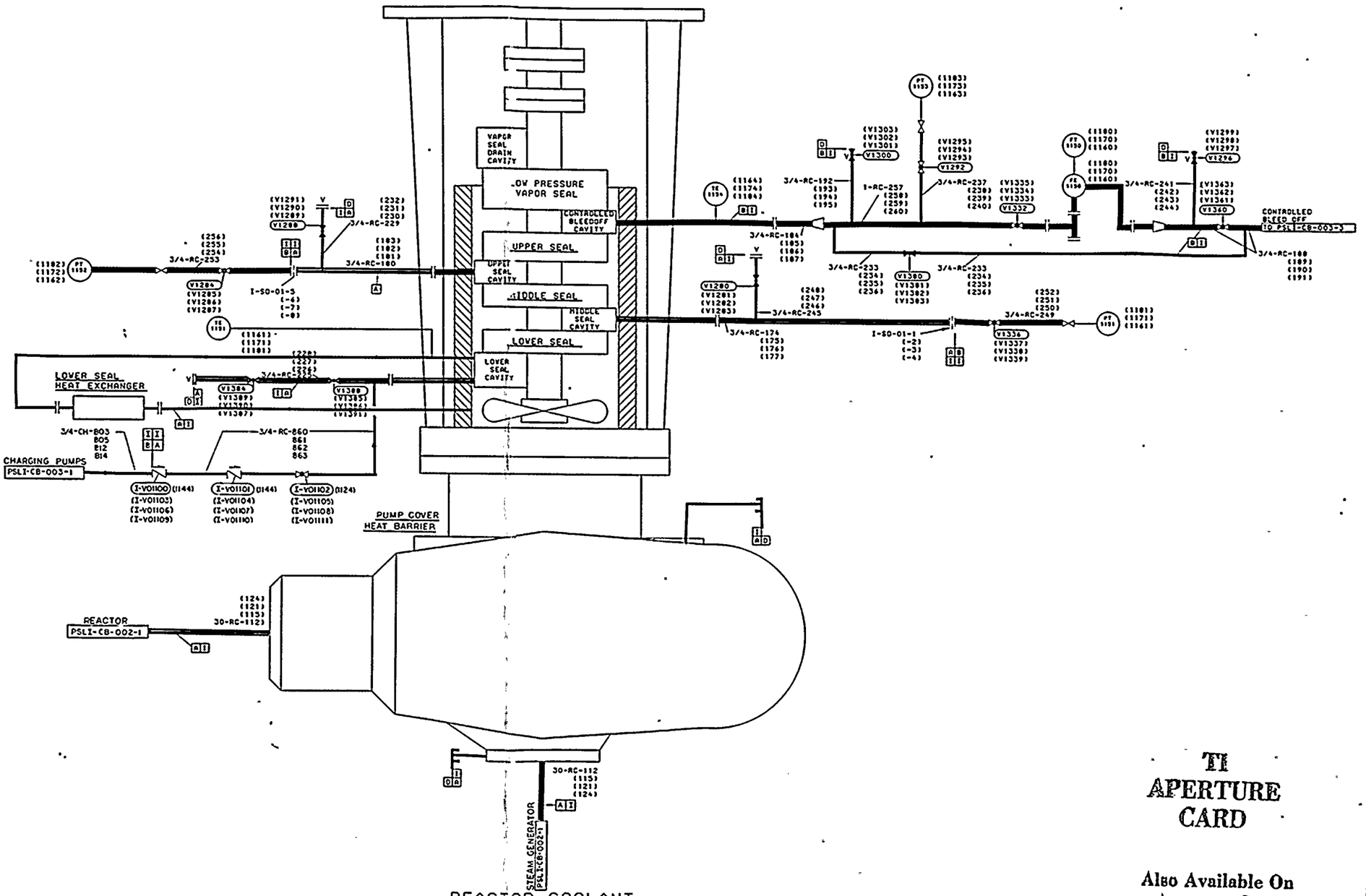

TI APERTURE CARD

Also Available On Aperture Card

8709090272-29

AUTH	NO	DATE	REVISION	BY	CH	COR	APP
AUTH	NO	DATE	GENERAL REVISION	HC	CWC	COR	APP
			REVISION	BY	CH	COR	APP

DATE 5/18/81 SCALE

FPL FLORIDA POWER & LIGHT COMPANY

DR KRB ER NO
CH COR
APPROVED C.S. KENT

ST. LUCIE #1
CODE BOUNDARIES
REACTOR COOLANT SYSTEM
PSL1-CB-002-2

(SL1,R,-)

SHEET 5 OF 5
8770-E-80308
CAD

REV NO 1

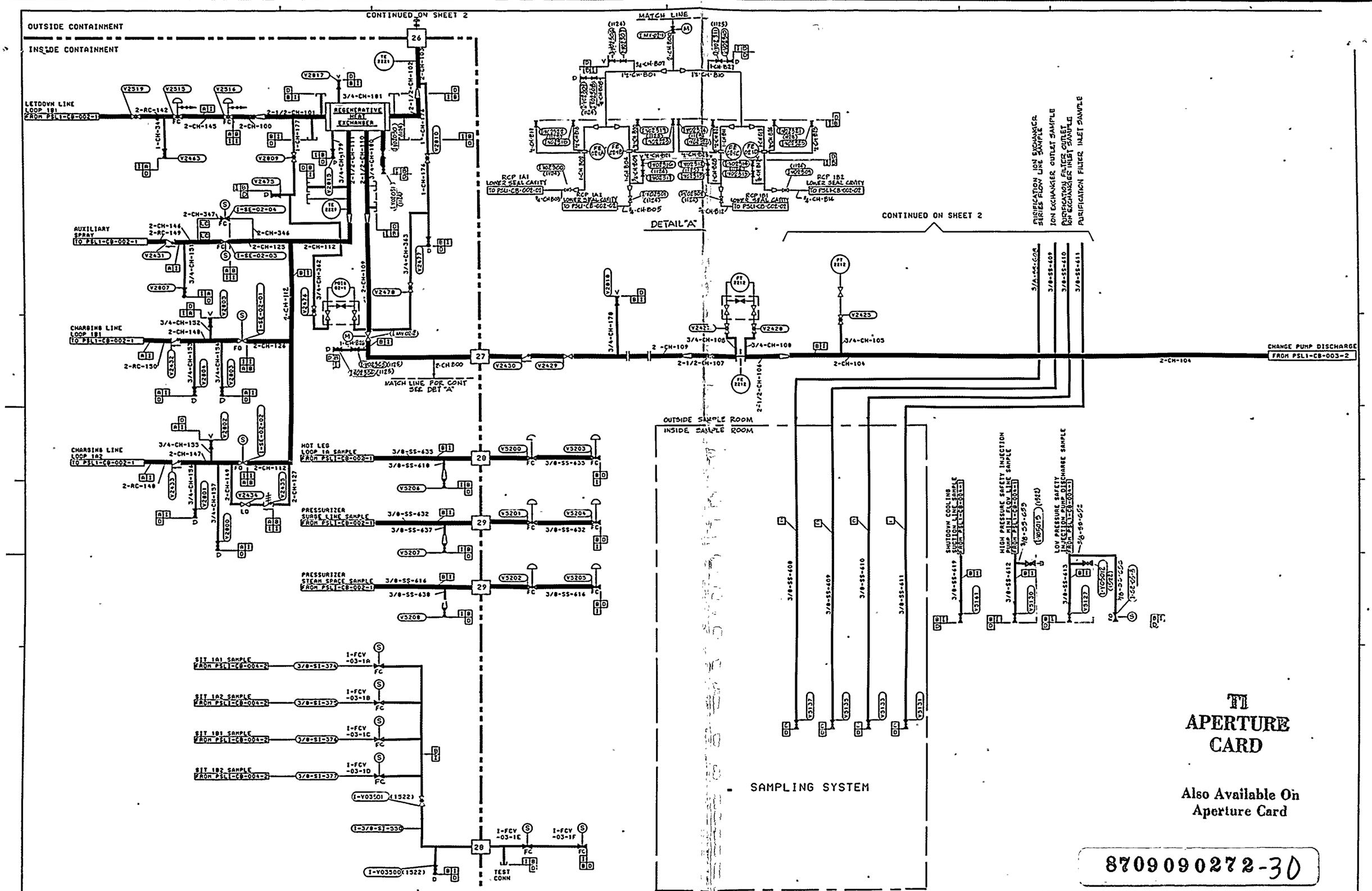

TI
APERTURE
CARD

Also Available On
Aperture Card

8709090272-30

AUTH	NO	DATE	REVISION	BY	CH	COR	APP
	1	12/4/81	TRACING REDRAWN, GENERAL REVISION	PB	DWC		

DATE 5/10/81 SCALE 0

FPL FLORIDA POWER & LIGHT COMPANY

DR KRB ER NO
CH COR
APPROVED C.S. KENT

ST. LUCIE #1
CODE BOUNDARIES
CHEMICAL & VOLUME CONTROL,
AND SAMPLING SYSTEMS
PSLI-CB-003-1

(SL1,R,-)

SHEET 1 OF 5

8770-E-80309

CAD

REV NO 1

TI APERTURE CARD

Also Available On Aperture Card

LETDOWN HEAT EXCHANGER

LETDOWN CONTROL VALVES

PURIFICATION FILTER 1A

PURIFICATION ION EXCHANGER 1A

PURIFICATION ION EXCHANGER 1B

DEBORATING ION EXCHANGER

LETDOWN STRAINER S-2900

PURIFICATION FILTER 1B

CONTINUED FROM SHEET 1

CONTINUED FROM SHEET 1

TO PSLI-CB-003-2 VOLUME CONTROL TANK

8709090272 -31

AUTH	NO	DATE	REVISION	BY	CH	COR	APP
AUTH	1	8/19/87	TRACING REDRAWN, GENERAL REVISION	MH	PB	WKP	

DATE 5/18/81 SCALE

FPL FLORIDA POWER & LIGHT COMPANY

DR KAB | ER NO

CH | COR

APPROVED C.S. KENT

ST. LUCIE #1
CODE BOUNDARIES
CHEMICAL & VOLUME CONTROL, AND SAMPLING SYSTEMS
PSLI-CB-003-1

(SL1,R,-)

SHEET 2 OF 5

8770-E-80309 CAD

REV NO 1

CONTINUED ON SHEET 4

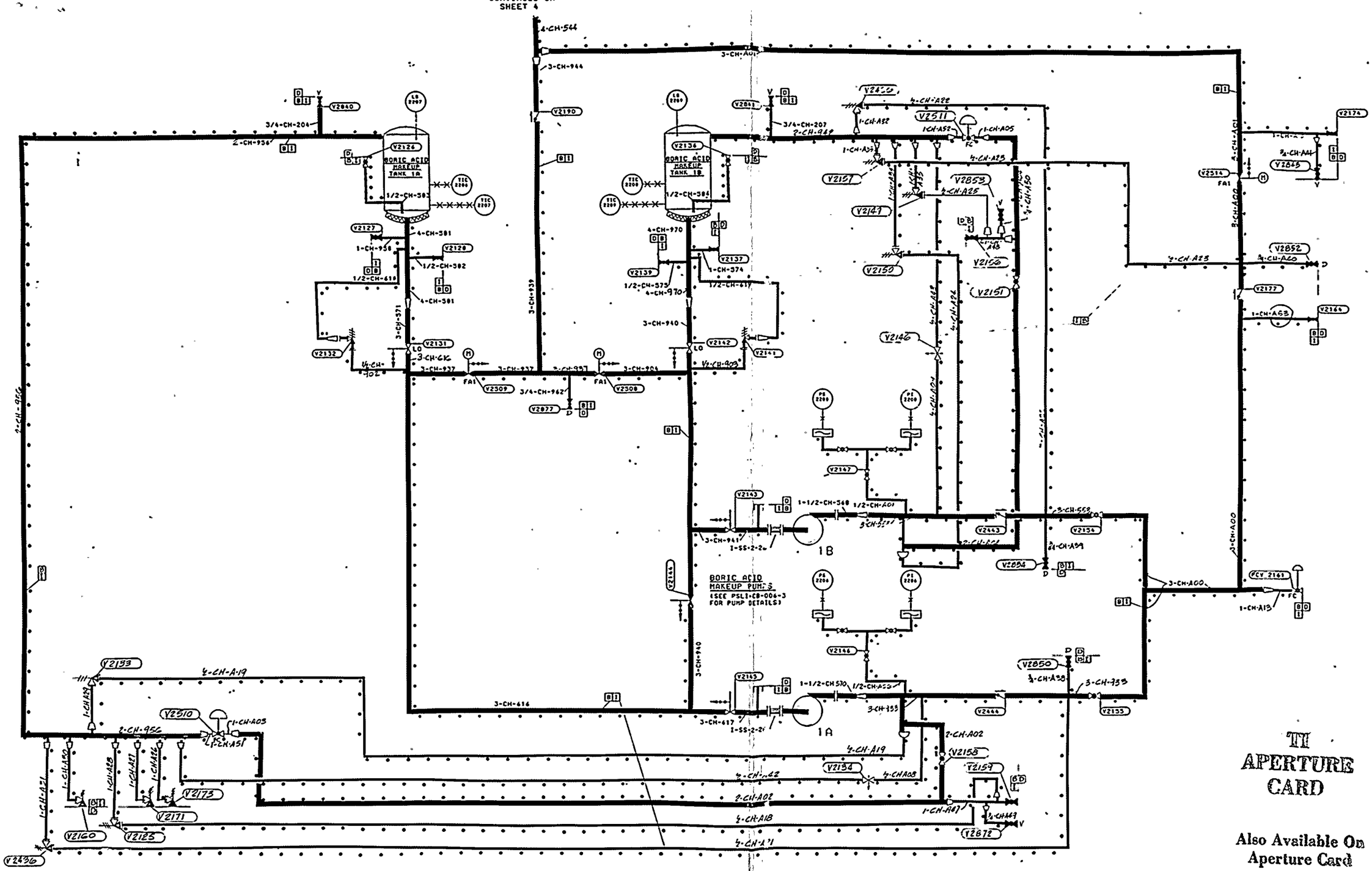
BORIC ACID MAKEUP TANK 1A
BORIC ACID MAKEUP TANK 1B
BORIC ACID MAKEUP PUMPS
(SEE PSL1-CB-006-3 FOR PUMP DETAILS)
1A
1B
4-CH-544
3-CH-A01
3-CH-944
3-CH-939
3-CH-940
3-CH-416
3-CH-937
3-CH-904
3-CH-962
3-CH-971
3-CH-970
3-CH-941
3-CH-947
3-CH-553
3-CH-555
3-CH-A00
2-CH-956
2-CH-A02
4-CH-A19
4-CH-A22
4-CH-A23
4-CH-A24
4-CH-A18
4-CH-A17
4-CH-A21
3/4-CH-204
3/4-CH-207
2-CH-949
1/2-CH-581
1/2-CH-582
1/2-CH-583
1/2-CH-584
1/2-CH-616
1/2-CH-617
1/2-CH-618
1-CH-956
4-CH-581
4-CH-970
1-1/2-CH-568
1-1/2-CH-570
1/2-CH-A01
1/2-CH-A03
1-CH-A03
1-CH-A51
1-CH-A52
1-CH-A53
1-CH-A55
1-CH-A56
1-CH-A57
1-CH-A58
1-CH-A59
1-CH-A60
1-CH-A61
1-CH-A62
1-CH-A63
1-CH-A64
1-CH-A65
1-CH-A66
1-CH-A67
1-CH-A68
1-CH-A69
1-CH-A70
1-CH-A71
2-CH-A44
2-CH-A45
2-CH-A46
2-CH-A47
2-CH-A48
2-CH-A49
2-CH-A50
2-CH-A51
2-CH-A52
2-CH-A53
2-CH-A54
2-CH-A55
2-CH-A56
2-CH-A57
2-CH-A58
2-CH-A59
2-CH-A60
2-CH-A61
2-CH-A62
2-CH-A63
2-CH-A64
2-CH-A65
2-CH-A66
2-CH-A67
2-CH-A68
2-CH-A69
2-CH-A70
2-CH-A71
V2126
V2127
V2128
V2129
V2130
V2131
V2132
V2133
V2134
V2135
V2136
V2137
V2139
V2140
V2141
V2142
V2143
V2144
V2145
V2146
V2147
V2148
V2149
V2150
V2151
V2153
V2154
V2155
V2157
V2158
V2159
V2160
V2161
V2162
V2163
V2164
V2165
V2166
V2167
V2168
V2169
V2170
V2171
V2172
V2173
V2174
V2175
V2176
V2177
V2178
V2179
V2180
V2181
V2182
V2183
V2184
V2185
V2186
V2187
V2188
V2189
V2190
V2191
V2192
V2193
V2194
V2195
V2196

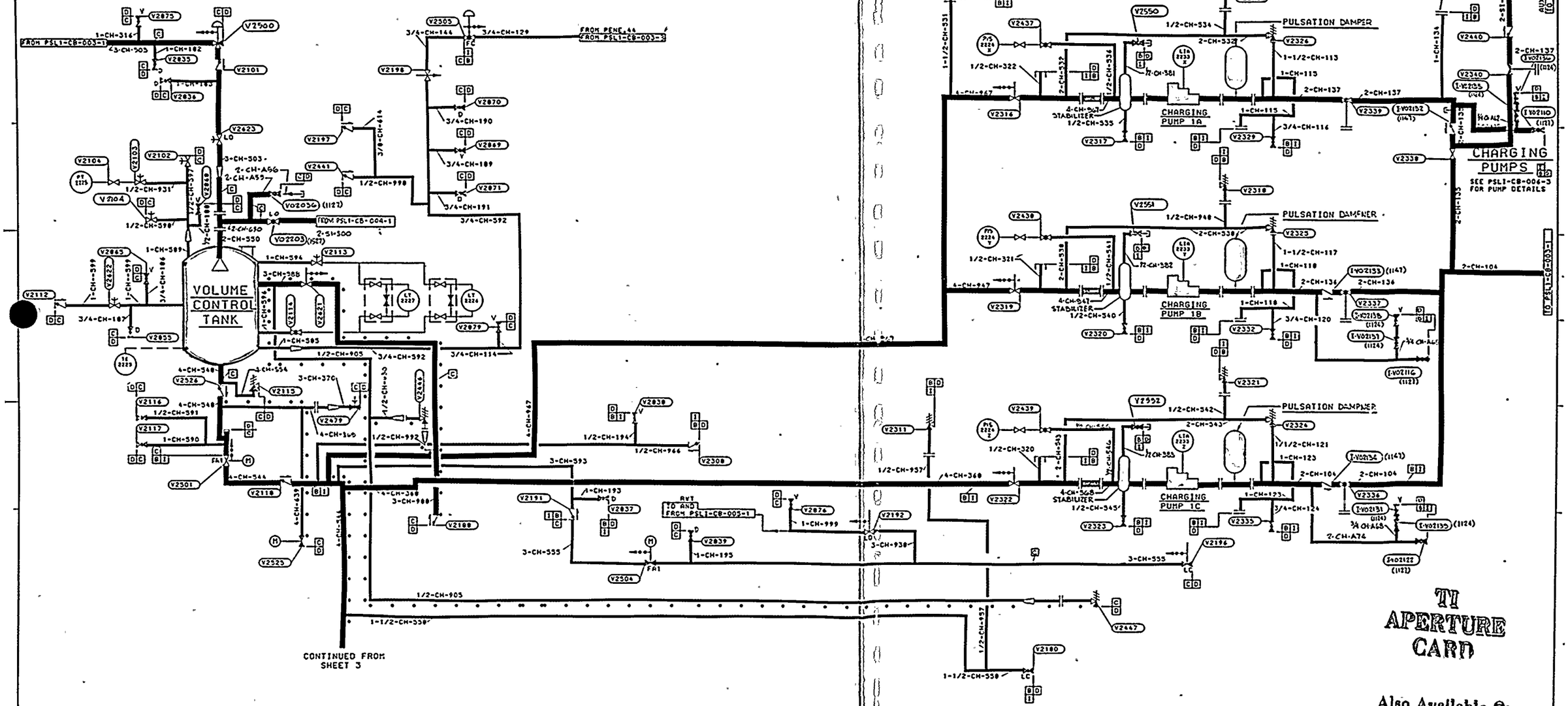

TI APERTURE CARD

Also Available On Aperture Card

8709090272-33

AUTH	NO	DATE	REVISION	BY	CH	COR	APP
	1	12/15/86	TRACING REDRAWN, GENERAL REVISION	MM	BC		

DATE 5/18/81 SCALE

FPL FLORIDA POWER & LIGHT COMPANY

DR KRB ER NO

CH COR

APPROVED C.S. KENT

ST. LUCIE UNIT #1
CODE BOUNDARIES
CHEMICAL & VOLUME CONTROL AND SAMPLING SYSTEMS
PSL1-CB-003-2

(SL1,R,-)

SHEET 4 OF 5

8770-E-80309 CAD

REV NO 1

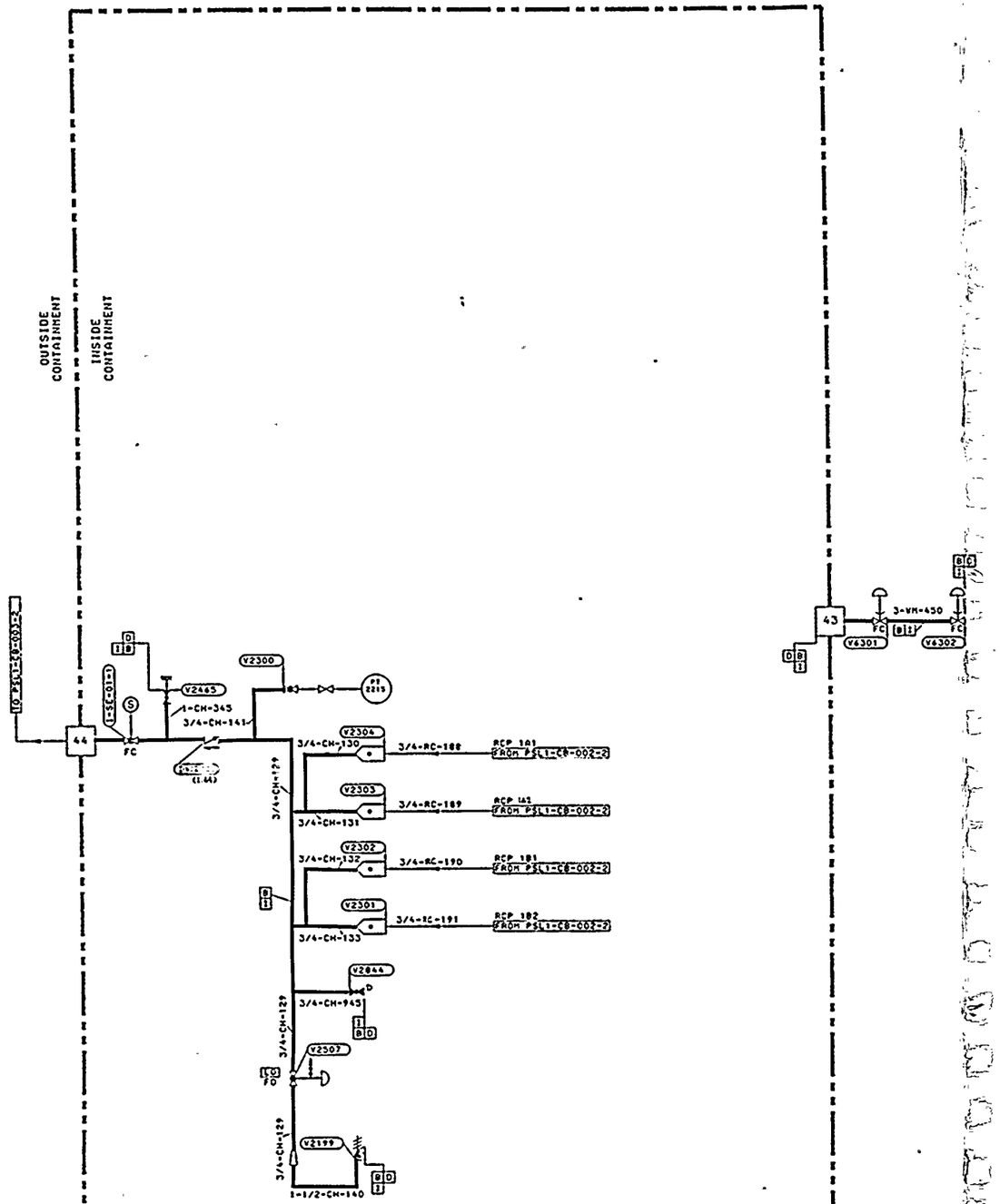

TI
APERTURE
CARD

Also Available On
Aperture Card

8709090272 -34

AUTH	NO	DATE	REVISION	BY	CH	COR	APP	AUTH	NO	DATE	REVISION	BY	CH	COR	APP
										11/1/81	GENERAL REVISIONS	MC	DWC		

DATE 5/18/81 | SCALE 0

FPL
FLORIDA POWER & LIGHT COMPANY

DR KRB | ER NO
CH | COR
APPROVED C.S. KENT

ST. LUCIE UNIT #1
CODE BOUNDARIES
CHEMICAL & VOLUME CONTROL
AND SAMPLING SYSTEMS
PSL1-CB-003-3

(SL1,R,-)
SHEET 5 OF 5
8770-E-80309
CAD
REV NO 1

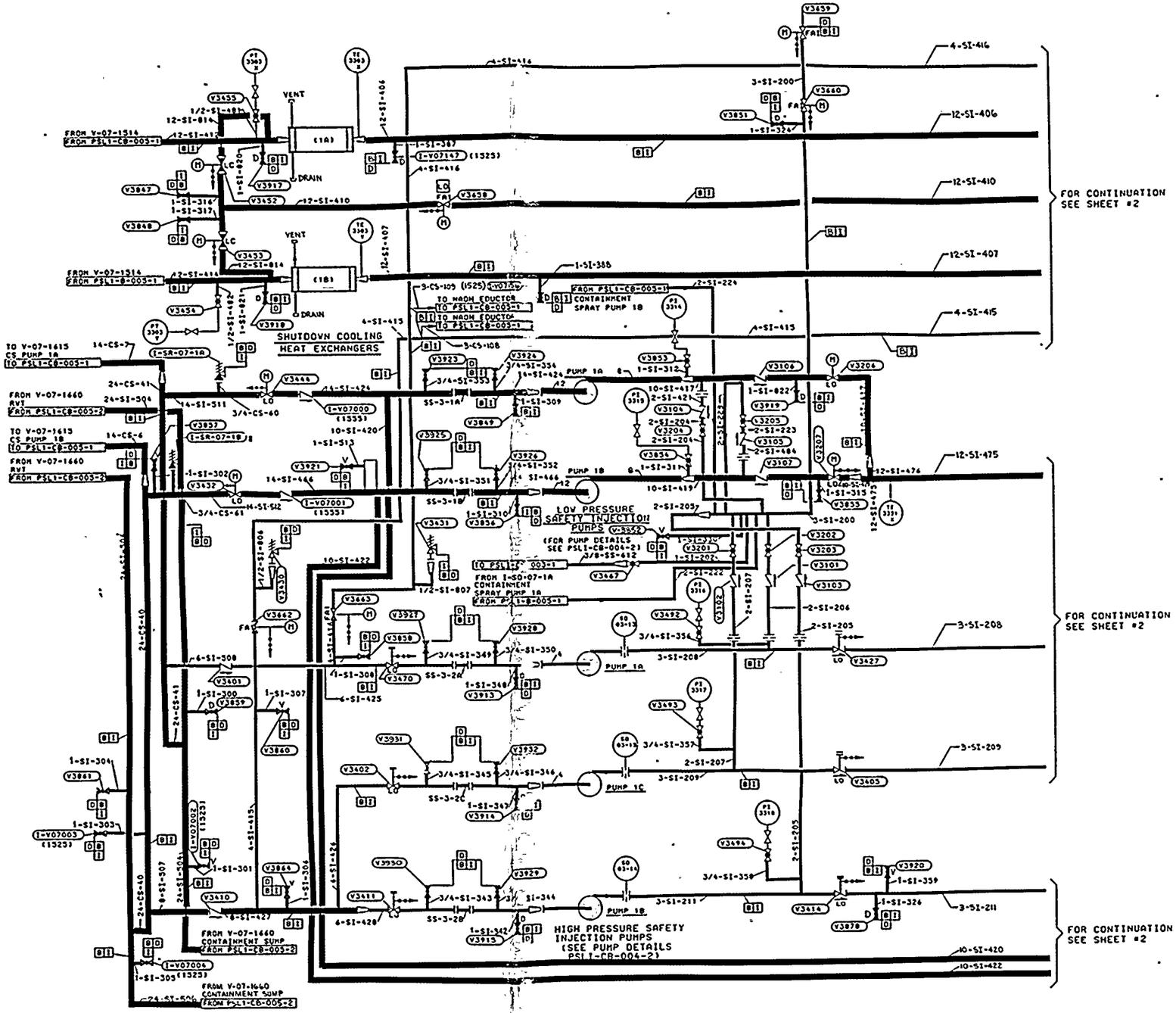

TI APERTURE CARD

Also Available On Aperture Card

8709090272-35

AUTH	NO	DATE	REVISION	BY	CH	COR	APP
AUTH	1	12/15/80	TRACING REDRAWN. GENERAL REVISION	PB	DWC		

DATE 5-18-81 SCALE

FPL FLORIDA POWER & LIGHT COMPANY

DR DGB ER NO
CH COR
APPROVED C.S. KENT

ST.LUCIE UNIT #1
CODE BOUNDARIES
SAFETY INJECTION AND SHUTDOWN COOLING SYSTEMS
PSL1-CB-004-1

(SL1,R,-)
SHEET 1 OF 4
8770-E-80310
CAD
REV NO 1

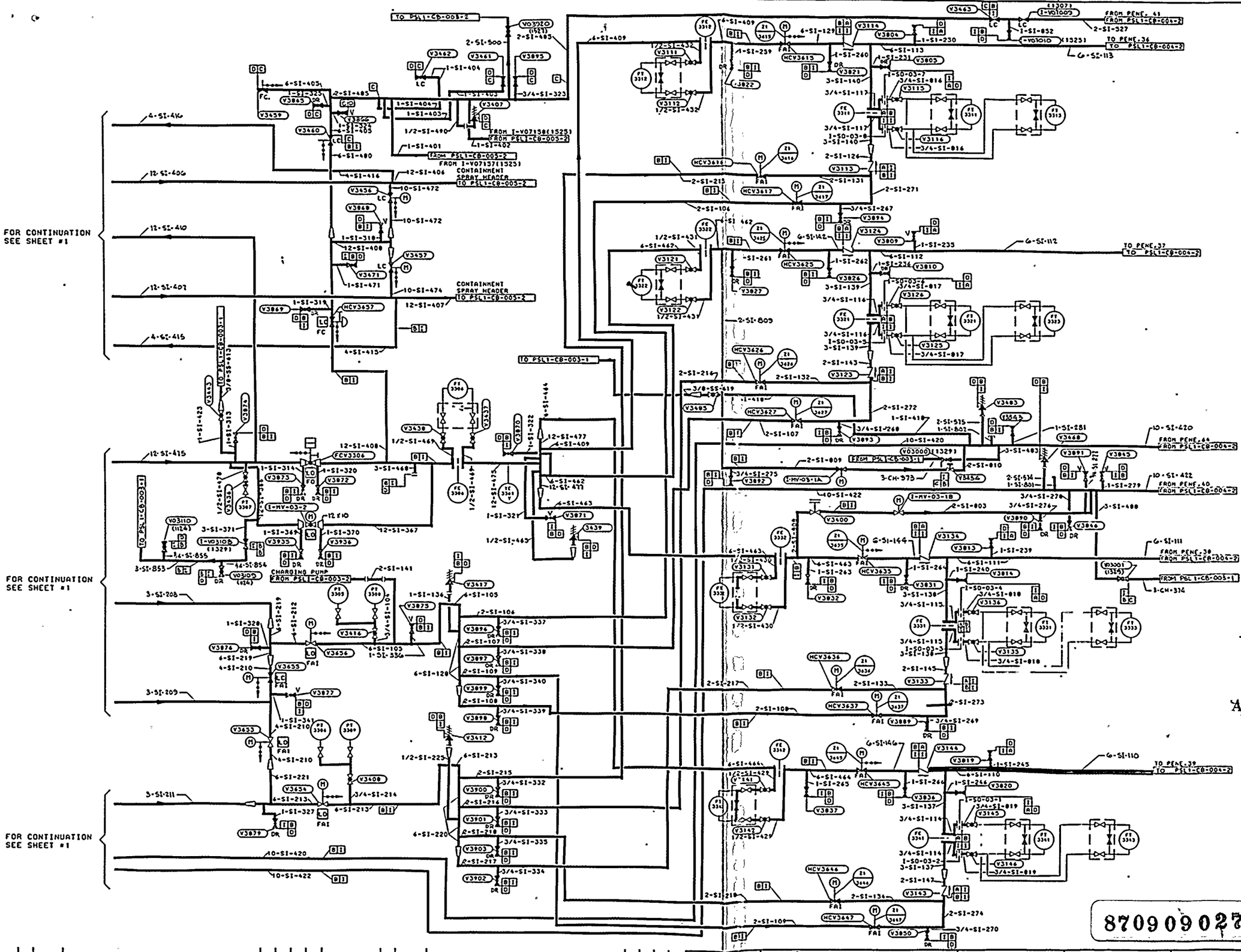

APERTURE CARD

Also Available On Aperture Card

8709090272-36

AUTH	NO	DATE	REVISION	BY	CH	COR	APP
AUTH	1	8/1/87	TRACING REDRAWN. GENERAL REVISION	SD	BC		

DATE 5-18-81 SCALE

FPL FLORIDA POWER & LIGHT COMPANY

DR DGB ER NO

CH COR

APPROVED C.S. KENT

ST.LUCIE UNIT #1
CODE BOUNDARIES
SAFETY INJECTION
AND SHUTDOWN COOLING SYSTEMS
PSL1-CB-004-1

(SL1,R,-)

SHEET 2 OF 4

8770-E-80310

REV NO 1

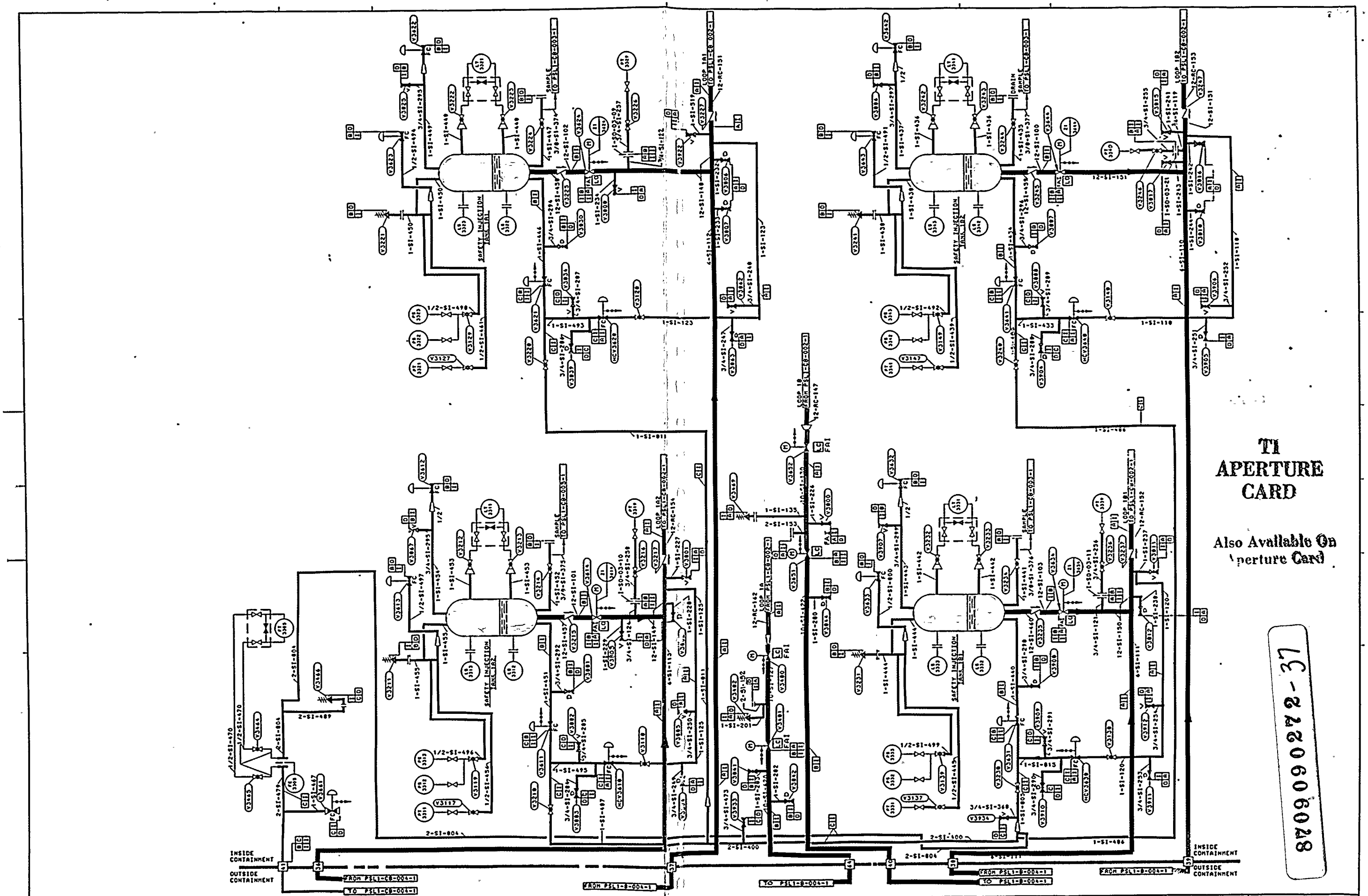

TI APERTURE CARD

Also Available On Aperture Card

8709090272-37

AUTH	NO	DATE	REVISION	BY	CH	COR	APP

AUTH	NO	DATE	REVISION	BY	CH	COR	APP
	1		TRACING REDRAWN, GENERAL REVISION	SD	BC		

DATE 5/18/81 SCALE

FPL FLORIDA POWER & LIGHT COMPANY

DR DGB ER NO
CH COR
APPROVED C.S. KENT

ST. LUCIE UNIT #1
CODE BOUNDARIES
SAFETY INJECTION
AND SHUTDOWN COOLING SYSTEMS
PSL1-CB-004-2

(SL1,R,-)

SHEET 3 OF 4

8770-E-80310

REV NO 1

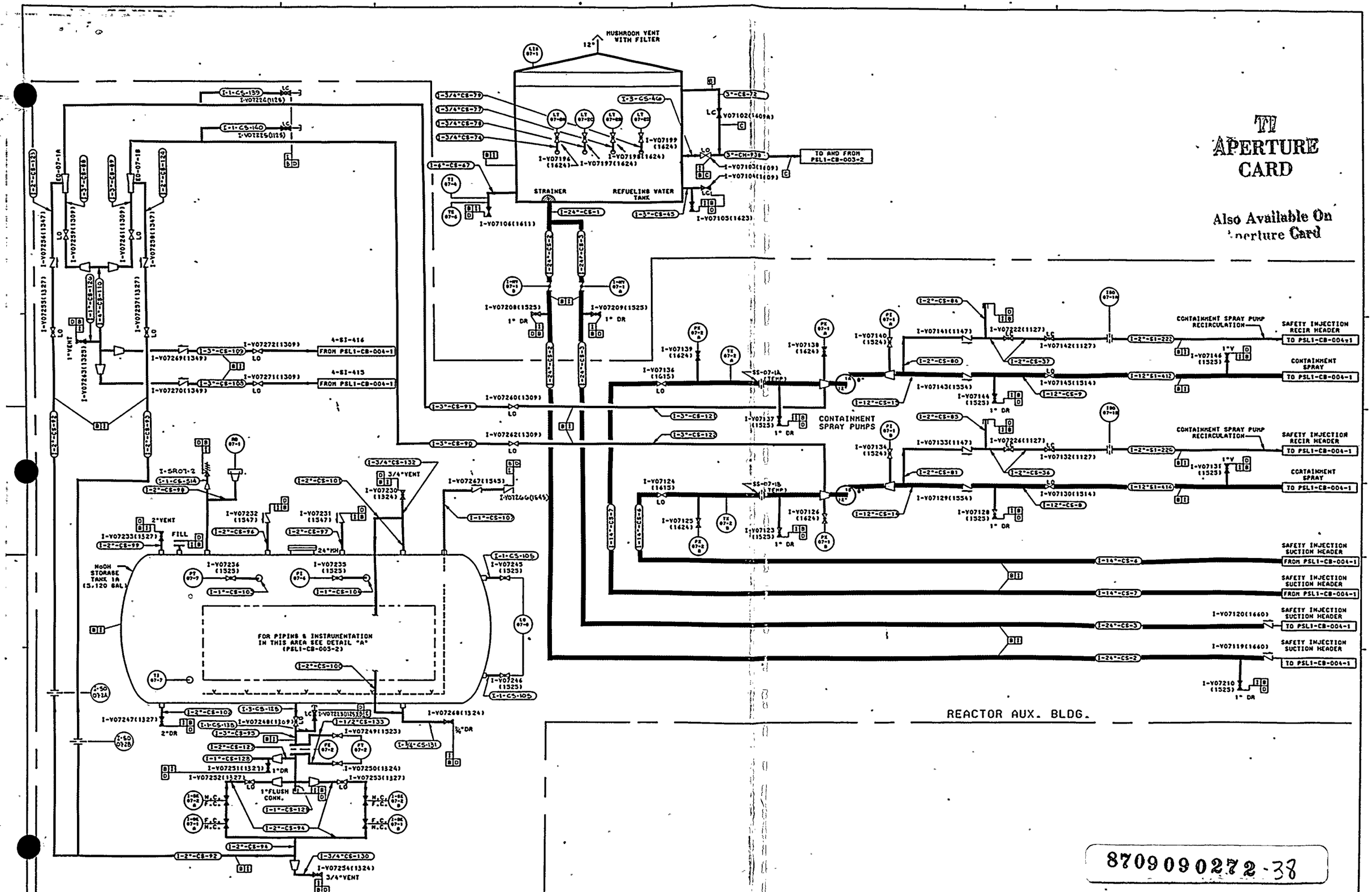

TI APERTURE CARD

Also Available On Aperture Card

8709090272-38

AUTH	NO	DATE	REVISION	BY	CH	COR	APP	AUTH	NO	DATE	REVISION	BY	CH	COR	APP
									1	11/4/80	GENERAL REVISION	HM	SC		

DATE 5/18/81 SCALE

FPL FLORIDA POWER & LIGHT COMPANY

DR H.Schleier ER NO
CH COR
APPROVED C.S. KENT

ST. LUCIE UNIT #1
CODE BOUNDARIES
CONTAINMENT SPRAY, IODINE REMOVAL AND REFUELING WATER SYSTEMS
PSLI-CB-005-1

(PMR,M,-)
SHEET 1 OF 2
8770-E-80311
CAD
REV NO 1

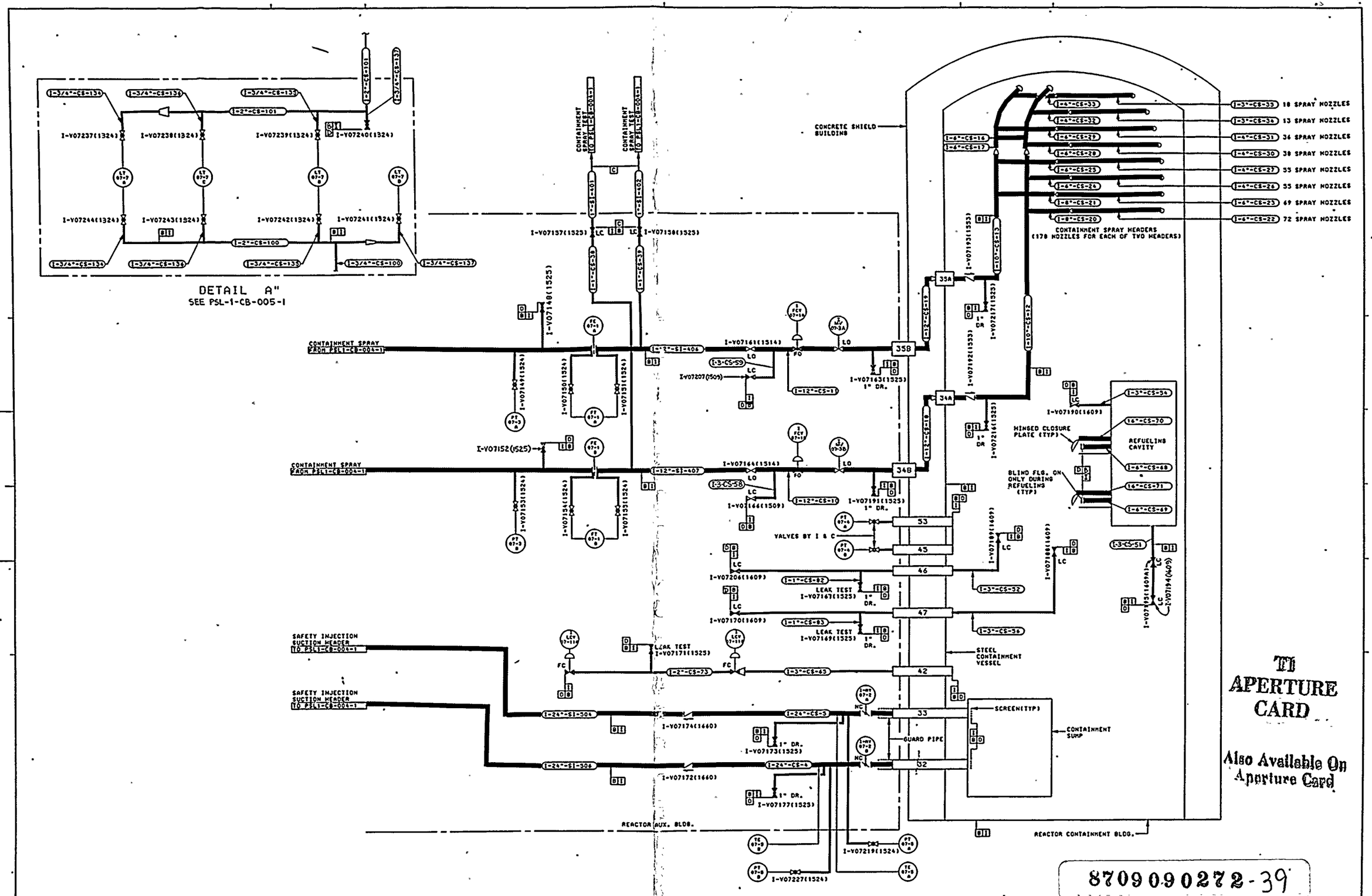

TI APERTURE CARD

Also Available On Aperture Card

8709090272-39

AUTH	NO	DATE	REVISION	BY	CH	COR	APP	AUTH	NO	DATE	REVISION	BY	CH	COR	APP
									1	12/8/80	GENERAL REVISION	PB	DWC		

DATE 5/18/81 SCALE

FPL FLORIDA POWER & LIGHT COMPANY

DR DAS ER NO
CH COR
APPROVED C.S. KENT

ST. LUCIE UNIT #1
CODE BOUNDARIES
CONTAINMENT SPRAY, IODINE REMOVAL AND REFUELING WATER SYSTEMS
PSL1-CB-005-2

(SL1,M,-)
SHEET 2 OF 2
8770-E-80311
CAD
REV NO 1

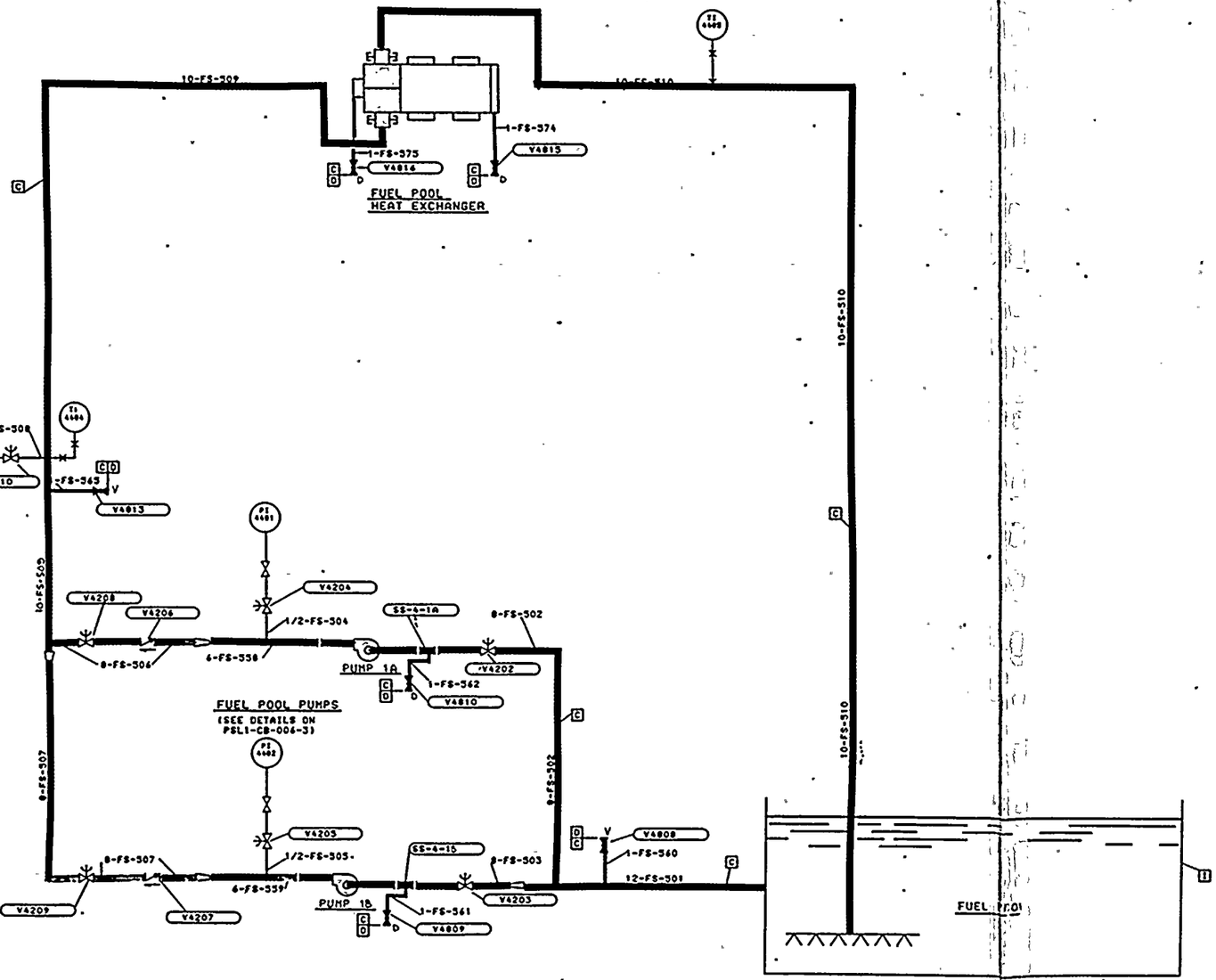

TI
APERTURE
CARD

Also Available On
Aperture Card

8709090272-40

AUTH	NO	DATE	REVISION	BY	CH	COR	APP	AUTH	NO	DATE	REVISION	BY	CH	COR	APP
									1		GENERAL REVISIONS	SD	JAS		

DATE 5/18/81 SCALE 0

FPL FLORIDA POWER & LIGHT COMPANY

DR LCC | ER NO
CH | COR
APPROVED C.S. KENT

ST. LUCIE UNIT #1
CODE BOUNDARIES
FUEL POOL COOLING SYSTEM
PSL1-CB-006-1

(SL1,M,-)
SHEET 1 OF 3
8770E-80312
CAD
REV NO 1

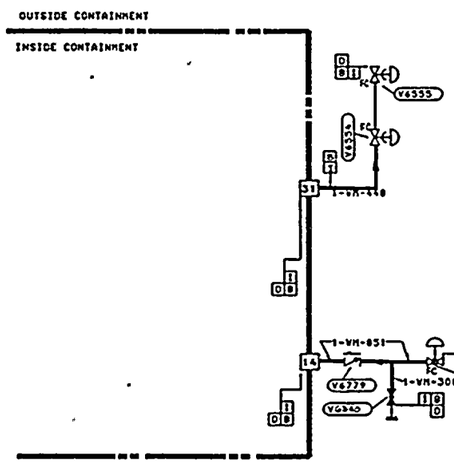

TI
APERTURE
CARD

Also Available On
Aperture Card

8709090272 - 41

AUTH	NO	DATE	REVISION	BY	CH	COR	APP	AUTH	NO	DATE	REVISION	BY	CH	COR	APP
									1	11/4/81	GENERAL REVISIONS	MC	DWC		

DATE 5/18/81 SCALE 0

FPL FLORIDA POWER & LIGHT COMPANY

DR LCC | ER NO
CH | COR
APPROVED C.S. KENT

ST. LUCIE UNIT #1
CODE BOUNDARIES
WASTE GAS SYSTEM
PSL1-CB-006-2

(SL1,M,-)
SHEET 2 OF 3
8770 E-80312
CAD
REV NO 1