U. S. NUCLEAR REGULATORY COMMISSION

REGION V

Report Nos. 50-528/92-23, 50-529/92-23, and 50-530/92-23

Docket Nos. 50-528, 50-529, and 50-530

License Nos. NPF-41, NPF-51, and NPF-74

Enforcement Action No. 92-119

Licensee Arizona Public Service Company
P. O. Box 53999, Station 9012
Phoenix, AZ 85072-3999

Facility Name Palo Verde Nuclear Generating Station
Units 1, 2, and 3

Inspection Conducted June 15 through June 19, 1992

Inspector B. Olson, Project Inspector

Approved By H. Wong, Chief
Reactor Projects Section 2

6-26-92
Date Signed

Inspection Summary:

Inspection on June 15 through June 19, 1992 (Report Numbers 50-528/92-23, 50-529/92-23, and 50-530/92-23)

Areas Inspected: Special inspection of the circumstances surrounding a Unit 1 containment isolation check valve found improperly assembled on March 18, 1992. This condition was documented by Unit 1 Licensee Event Report 92-005. Inspection Procedure 92700 was used as guidance during this inspection.

Results:

General Conclusions and Specific Findings:

The inspector identified concerns with the level of detail of instructions in a valve maintenance work order and in the test procedure used to verify valve operability subsequent to the maintenance activities. As a result of using the work order and the test procedure, a containment isolation check valve was returned to service even though

the valve internals were installed backwards. This condition existed from August 1989 to March 1992.

Significant Safety Matters:

The concerns noted above represent a weakness in the licensee's control of maintenance activities.

Summary of Violations:

One apparent violation was identified.

DETAILS

1. Persons Contacted

The below listed technical and supervisory personnel were among those contacted:

Arizona Public Service (APS)

B. Blackmore,	System Engineer
T. Bradish,	Manager, Compliance
*M. Friedlander,	Manager, Component and Specialty Engineering
*A. Johnson,	Supervisor, Compliance
B. Lehman,	Component Engineer
M. McEwan	System Engineer
*G. Overbeck,	Director, Site Technical Support (STS)
M. Radspinner,	Supervisor, Mechanical/Chemical Engineering
*R. Roehler,	Senior Engineer

Combustion Engineering (CE)

M. Crawford
J. Isakson

Nuclear Regulatory Commission

D. Coe, Senior Resident Inspector
*F. Ringwald, Resident Inspector
J. Sloan, Resident Inspector

* Denotes personnel in attendance at the Exit meeting held with the NRC inspector on June 19, 1992.

The inspector also talked with other licensee personnel during the course of the inspection.

2. Containment Isolation Check Valve Inoperable Due to Incorrect Maintenance and Inadequate Retest - Unit 1

On March 18, 1992, the licensee discovered that the valve bonnet assembly for a Unit 1 containment isolation check valve was installed backwards. The discovery was made during valve maintenance while Unit 1 was in a refueling outage. The licensee subsequently determined that the valve had been improperly assembled on August 22, 1989. As a result of the improper assembly, the licensee declared that the valve had been inoperable and issued Unit 1 Licensee Event Report (LER) 92-005. The LER indicated that the inoperable valve was a condition prohibited by the plant's Technical Specifications (TS).

a. Valve Background

1) Description

Unit 1 valve SIE-V133 was found to have its bonnet assembly installed approximately 160 degrees from normal alignment. The valve was manufactured by Borg-Warner and is a three inch swing check, model 77700. The bonnet assembly includes the attached valve disc, and the bonnet assembly is secured to the valve body with a bonnet retainer held by studs, nuts, and washers. A silver plated seal between the bonnet and valve body provides leakage protection. The valve design allows the bonnet assembly to be rotated in the valve body when the retainer and seal are not present. Attachment 1 depicts the valve assembly.

2) Location and Use

SIE-V133 is located in the high pressure safety injection (HPSI) system leading to reactor coolant system loop 1A. The valve is located inside of containment, within five feet of the containment wall. Upstream of the valve, and outside of containment, the two HPSI trains join to form one line. A motor operated valve (MOV) is located outside of containment in each of the HPSI trains. Downstream of SIE-V133, the low pressure safety injection (LPSI) system connects to the injection piping. Attachment 2 depicts the location of the check valve in the safety injection system.

The valve remains shut for normal plant operation. Upon initiation of HPSI, the valve would open to provide flow from both HPSI trains.

3) Regulatory Basis

The two upstream MOVs and check valve SIE-V133 are part of the containment isolation system for containment piping penetration number 15. Section 6.2.4.1.1 a) of the Combustion Engineering Standard Safety Analysis Report (CESSAR) indicates that two isolation valves are provided at each containment penetration: one inside the containment, and one outside the containment. Section 6.2.4.2 and Figure 6.2.4-1A of the CESSAR along with Table 6.2.4-1 of the Palo Verde Updated Final Safety Analysis Report (UFSAR) indicate that this penetration design satisfies 10 CFR Part 50, Appendix A, General Design Criterion (GDC) 55. GDC 55 requires, in part, that containment penetrations have an automatic isolation valve located inside and outside of containment. The check valve is considered to be an automatic valve for the purpose of containment isolation.

SIE-V133 is listed in TS Table 3.6-1 as a containment isolation valve for penetration 15. The applicable TS Limiting Condition

for Operation, 3.6.3, indicates that the valve is to be operable in Modes 1, 2, 3, and 4. Following valve maintenance, TS Surveillance Requirement 4.6.3.1 indicates that the valve shall be demonstrated to be operable prior to returning it to service. Although SIE-V133 forms part of the containment isolation system, TS Table 3.6-1 exempts the valve from the Type C containment leak testing requirements of 10 CFR Part 50, Appendix J.

b. SIE-V133 Maintenance Activities

Work Order (WO) 00356906 was prepared in May 1989 to rework valve SIE-V133 to fix a body-to-bonnet leak. The valve was disassembled on August 22, 1989, in the following procedure sequence: the studs, nuts, washers, and bonnet clamp were removed; the bonnet retainer was partially unscrewed, and the bonnet clamp was reinstalled; a scribe line was marked from the center line of one of the studs to the valve body; the nuts were re-tightened to break the body-to-bonnet seal; and the bonnet was free to be lifted from the body. The purpose of the scribe line was to provide alignment indication for the bonnet assembly and the valve body. Following inspection, the valve seal was replaced, and the valve was assembled on August 22, 1989.

The inspector reviewed SIE-V133 WOs issued subsequent to the 1989 seal replacement and noted that the valve was not disassembled again until March 18, 1992, using WO 00426283. This WO indicated the valve was suspected of leaking because pressurizer level dropped approximately one percent every two minutes when the "A" train of shutdown cooling was in service with one of the MOVs upstream of SIE-V133 open. In addition to reworking SIE-V133 to stop the leakage past the valve seat, the WO was to repair a body-to-bonnet leak. During disassembly, the licensee found that the bonnet assembly was installed about 160 degrees from normal alignment. The licensee also observed damage to the valve internals as a result of installation in the reverse orientation.

The licensee initiated Condition Report/Disposition Request (CRDR) 1-2-0177 to investigate the root cause of SIE-V133 being improperly assembled. The licensee speculated, but could not confirm, that the improper assembly was due to incorrect scribe lines (possible multiple scribe lines existed), removal and replacement of a marked stud in a different sequence, or personnel difficulty associated with working in a respirator during valve reassembly. This event was treated as an isolated occurrence.

The inspector reviewed the WOs associated with the disassembly of SIE-V133 and noted that there were no specific instructions for marking the line from a valve stud to the body. The inspector noted that this action was critical as mismarking could allow the valve to be reassembled in the wrong orientation. The licensee indicated that this action had been considered to be within the skill of the

craft. The inspector also noted that the sequence of WO steps was different than specified by the vendor manual. The first step for disassembly in the Borg-Warner manual was to mark the body-to-bonnet orientation. The licensee's WOs marked the valve orientation after removal of the studs and nuts, partially unscrewing the bonnet retainer, and reinstalling the studs and nuts. The inspector questioned if some misalignment might occur while unscrewing the bonnet retainer and inadvertently rotating the bonnet assembly prior to match marking. The licensee indicated that while misalignment was possible, it would be unlikely due to the force needed to break the seal between the bonnet assembly and the valve body. The licensee added that the seal in SIE-V133 did not show any markings to indicate that it had rotated. The inspector also noted that the Borg-Warner manual specified measurement of a seating dimension for the bonnet retainer, and the WOs did not specify making the measurement.

c. Post Maintenance Tests

The licensee conducted a surveillance test for SIE-V133 following the 1989 maintenance. The test procedure, 73SR-1XI29, consisted of operating the HPSI pumps and measuring the flow through the check valve. Since the test was satisfactory, even though the valve internals were reversed, the valve was returned to service. The inspector reviewed the results from tests performed on August 29, 1989, and on November 2, 1989, and did not observe any unusual results which may have indicated that SIE-V133 was improperly assembled.

One stated objective of the licensee's test procedure was to satisfy the requirements of TS 4.0.5. TS 4.0.5 indicates that inservice testing of ASME Code Class 2 valves shall be performed in accordance with Section XI of the ASME Boiler and Pressure Vessel Code. The test procedure referred to Section XI, Subarticle IWV-3520 of the ASME Boiler and Pressure Vessel Code, 1980 Edition, Winter 1981 Addenda. Subarticle IWV-3520 indicated that check valves shall be exercised to the position required to fulfill their function, and the subarticle described test requirements for normally open and normally shut check valves. The inspector noted that the test procedure did not refer to Subarticle IWV-3200 of ASME Section XI which indicated that a valve shall be tested to demonstrate that the performance parameters which could be affected by maintenance are within acceptable limits.

Another stated objective of the test procedure was to demonstrate valve operability. Testing to ensure valve operability was required by TS 4.6.3.1, which indicated that containment isolation valves shall be demonstrated operable prior to returning a valve to service after maintenance, repair, or replacement work is performed on the valve.

The inspector noted that while the surveillance procedure would test that valve SIE-V133 would pass flow, it would not test that the valve provided isolation capability. The inspector discussed the function of SIE-V133 with various licensee personnel including a component engineer, system engineers and an engineer responsible for the test procedure. Licensee personnel indicated that the function of the valve was to open after safety injection initiated. These personnel did not indicate that the valve had a design feature to shut for the purpose of containment isolation.

d. Other Occurrences

The licensee had three other occurrences where the bonnet assembly of similarly designed valves was misaligned.

Through discussions with licensee personnel and review of documents, the inspector learned of two previous instances where bonnet assemblies had been improperly installed. In 1986, during Unit 3 pre-operational testing, valves SIE-V134 and SIE-V144 were found to have their bonnet assemblies installed approximately 30 degrees from normal. Corrective action for these two valves included repair of minor defects observed during valve inspection. The inspector did not find any documentation to indicate that corrective actions were taken to prevent future occurrences.

On April 30, 1992, Unit 1 valve SIA-V404, the HPSI "A" pump discharge check valve, was disassembled and the bonnet assembly was found to be 180 degrees out of normal alignment. The licensee had been alerted to a problem with the check valve when a 300 to 1,000 psi pressure drop across the valve was observed during flow testing of the pumps's discharge MOV. Additionally, the licensee observed reduced safety injection flows during the testing. SIA-V404 had been previously disassembled during the refueling outage, and the valve internals had been reversed only during a time period when the HPSI train was inoperable.

e. Corrective Actions

Unit 1 LER 92-005 indicated that mechanical maintenance personnel would be briefed on the misassmbly of SIE-V133. The LER also indicated that since starting a check valve inspection program in February 1990, no other check valve alignment problems had been identified, and SIE-V133 was an isolated occurrence. The LER stated that before SIE-V133, there had been no previous similar events reported pursuant to 10 CFR Part 50.73.

Following the discovery of SIA-V404 misassembly, the licensee initiated CRDR 1-2-0310 to identify the root cause and evaluate additional corrective actions since the valve was the second one found to be misassembled during the Unit 1 refueling outage. The licensee took the additional action of assessing the need for further testing of check valves at all units. This assessment

resulted in the identification of 208 bonnet hung swing check valves for all three units. Most of these valves were judged not to be suspect due to being reverse flow tested or due to the bonnet bolting directly to the valve body (versus the silver seal valve design which allows bonnet rotation after positioning the internals inside the valve body). The licensee determined that 10 valves per unit required verification. The licensee chose to use an ultrasonic (UT) technique to identify the orientation of a groove cut into the underside of the bonnet. The location of the groove verified the orientation of the hanging disc. The 10 valves in each unit were inspected and were found to be satisfactory.

In addition to the CRDRs issued for the two Unit 1 valves found misassembled, the licensee initiated Engineering Evaluation Request (EER) 91-SI-032 to evaluate the safety function and determine if reverse flow testing is required for HPSI pump discharge check valves and the LPSI and HPSI containment isolation check valves that are not required to be leak tested.

f. Safety Significance

During the period when Unit 1 operated at power with SIE-V133 improperly assembled, three reactor trips occurred and two shutdowns were performed. The licensee did not report any abnormal operation of the safety injection system during these events. At the time of completion of this inspection, the licensee indicated that an assessment of the effects of design bases accidents coupled with valve misassembly would be performed.

The safety significance of the misassembly of SIE-V133 is based primarily on the generic implication of not performing acceptable post maintenance tests on safety related check valves prior to their return to service. Many of these check valves are opened and inspected in accordance with the licensee's check valve preventive maintenance program, and therefore, continue to be vulnerable to misassembly and inadequate testing. As discussed above, two instances arose in which safety related check valves in the same system were similarly misassembled. One, SIA-V404, was identified prior to returning the valve to service, and the other, SIE-V133, was not. As a result of SIE-V133 misassembly, GDC requirements for containment isolation were not met for an entire fuel cycle. Adherence to the General Design Criteria is still required to maintain the "defense in depth" posture inherent in the 10 CFR requirements.

The Palo Verde UFSAR did not appear to credit SIE-V133 with an isolation function since it was always assumed to be open for safety injection flow throughout any analyzed accident. Even if one train of HPSI sustained total failure (single failure criteria), system design would continue to provide opposite train flow through the penetration. The inspector noted that the CESSAR stated that check valve failures were not considered credible and therefore, analysis

did not consider such a failure. Other containment isolation check valves are credited with design functions related to different system failure modes. For example, CESSAR 6.3.2.5.4, "Capacity to Maintain Cooling Following a Single Failure," and Table 6.3.2.-2, "Safety Injection System Failure Modes and Effects Analysis," (Item No. 6) credits the LPSI penetration containment isolation check valves with preventing recirculation mode backflow from HPSI pumps if the MOV containment isolation valve for LPSI fails open. The inspector thus noted it was fortunate that a more significant valve did not suffer degradation.

g. Conclusions

Based on the discussion above, the inspector concluded the following:

1) The licensee initially limited the scope of corrective actions because SIE-V133 was considered to be an isolated event. The licensee did not take into account two previous instances where similarly designed valves were found to be misassembled. Additional corrective actions were initiated as a result of finding SIA-V404 misassembled. Unit 1 LER 92-005 did not address the previous occurrences.

2) The maintenance procedure did not provide sufficient detail for marking the orientation of the valve during disassembly. The procedure relied on the skill of the craft to ensure that this action was successfully accomplished. In addition, the maintenance activities did not accomplish the intended goal of proper valve reassembly.

3) The function of the valve to provide containment isolation was not fully considered when developing the post maintenance test procedure to demonstrate operability. Isolation capability was not tested.

4) As a result of the improper maintenance and the lack of testing to demonstrate isolation capability, the valve was inappropriately placed into service. The unit was operated in Modes 1, 2, 3, and 4 with the valve inoperable, and the TS 3.6.3 action requirements were not met. This is an apparent violation of NRC requirements (Violation 528/92-23-01).

5) The actual safety significance of plant operation with SIE-V133 inoperable appeared to be low in that the check valve was not called upon to perform a containment isolation function during the period of improper assembly. In addition, it appeared that the Palo Verde UFSAR accident analyses did not credit the ability of the valve to close (safety function is to open for a safety injection).

h. Licensee Commitments

The conclusions of the inspector were presented to licensee management at the exit meeting. Licensee management made the following commitments:

1) To evaluate the need for a supplement to LER 92-05 or a new LER to assess the TS surveillance and ASME Section XI requirements and any needed corrective action (clarifying the position that there were no requirements to test SIE-V133 for reverse flow), and to modify the statement that SIE-V133 was an isolated occurrence.

2) To review the guidance promulgated in Generic Letter 89-04 for adequacy. This generic letter addressed reverse flow testing of check valves.

3) To review Quality Assurance (QA) program involvement and the need for program modifications, if necessary.

4) To review the mechanical technician valve maintenance training program for needed modifications.

5) To develop a Model Work Order for disassembly of silver seal bonnet valves.

6) To evaluate the safety significance of SIE-V133 being misassembled when coupled with design basis accidents.

7) To perform an inspection or test to confirm isolation capabilities of the HPSI pump discharge check valves and the HPSI and LPSI containment isolation check valves that are not tested for leakage. The inspection or test would be performed after any maintenance activity that is completed prior to the licensee completing their evaluation of the need for reverse flow testing of the valves.

One apparent violation of NRC requirements was identified.

3. Exit Meeting (30702)

An exit meeting was held on June 19, 1992, with licensee management and the inspector during which the observations and conclusions in this report were generally discussed.

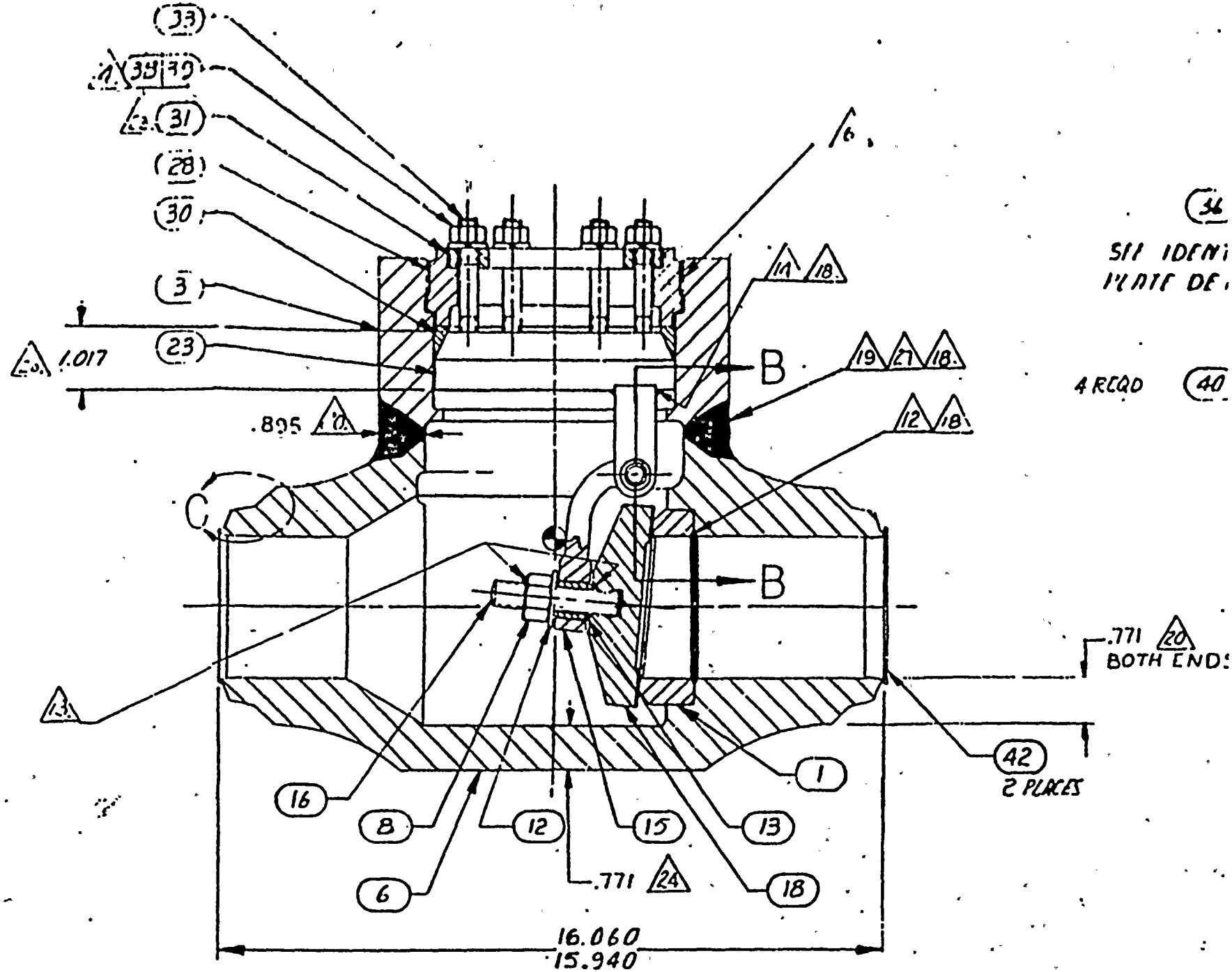

SECTION A - A

ATTACHMENT 1

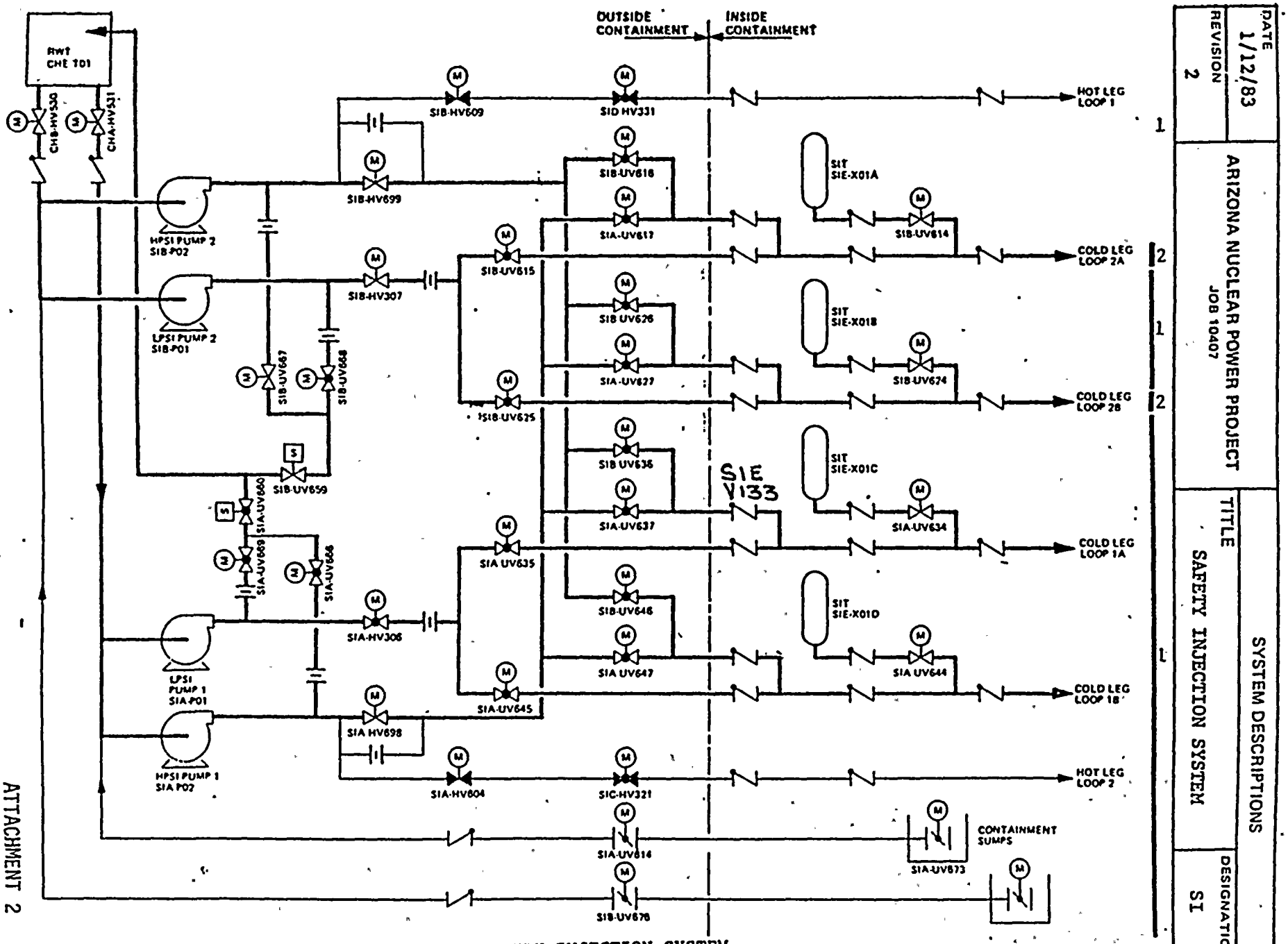

SAFETY INJECTION SYSTEM
INJECTION MODE

FIGURE SI-1

ATTACHMENT 2

PF-1123 110802/8/25