U.S. NUCLEAR REGULATORY COMMISSION

REGION V

AUGMENTED INSPECTION TEAM (AIT) REPORT

Report Nos. 50-528/91-47, 50-529/91-47, and 50-530/91-47

Docket Nos. 50-528, 50-529, and 50-530

License Nos. NPF-41, NPF-51, and NPF-74

Licensee: Arizona Public Service Company
P. O. Box 53999, Station 9012
Phoenix, Arizona 85072-3999

Facility Name: Palo Verde Nuclear Generating Station
Units 1, 2, and 3

Inspection at: Palo Verde Nuclear Generating Station
Wintersburg, Arizona

Inspection Conducted: November 16-19, 1991

Team Members: L. F. Miller Jr., Chief, Operations Section, Region V, Team Leader

J. Sloan, Resident Inspector, Palo Verde

D. G. Acker, Engineering Inspector, Region V

N. K. Trehan, Electrical Engineer, NRR/SELB

Approved by: D. F. Kirsch 12/10/91
D. F. Kirsch, Chief
Reactor Safety Branch, Region V

Inspection Summary:

Inspection on November 16-19, 1991 (Report Nos. 50-528/91-47, 50-529/91-47, and 50-530/91-47)

Areas Inspected: Augmented Inspection Team (AIT) review of a partial loss of offsite power event at Unit 3 due to an unattended, ungrounded mobile crane boom striking one of two offsite 13.8 kV power transmission lines.

During this inspection, Inspection Procedure 93800 was used.

TABLE OF CONTENTS

INSPECTION DETAILS

I. INTRODUCTION - MANAGEMENT SUMMARY AND EVENT OVERVIEW

A. Purpose and Scope of the AIT Inspection

This report presents the findings of an NRC Augmented Inspection Team (AIT) inspection of the partial loss of offsite power event which occurred on November 15, 1991 at the Palo Verde Unit 3 facility.

The decision to dispatch an AIT was made by NRC management based on the similarities to the event at the Vogtle Unit 1 facility in March 1990, and to the event at the Diablo Canyon Unit 1 facility in March 1991. Other issues which supported the formation of an AIT included the complication of the event by operator communication errors, and questions concerning the effectiveness of licensee followup actions for the Vogtle and Diablo Canyon events.

The Vogtle event occurred while the unit was shutdown, and resulted in a complete loss of power and a complete loss of core cooling for about ninety minutes, after a fuel truck knocked down the only transmission line supplying power to the facility. The Diablo Canyon event also occurred while the unit was shutdown, and resulted in a loss of offsite power when a mobile crane grounded the only offsite power transmission line to the facility.

The NRC notified all nuclear facilities of these events and their consequences. NUREG-1410, "Loss of Vital AC Power and the Residual Heat Removal System During Mid-Loop Operation at Vogtle Unit 1 on March 20, 1990" and NRC Information Notice No. 90-25, Supplement 1, "Loss of Vital AC Power with Subsequent Reactor Coolant System Heat-Up" described the Vogtle event. NRC Information Notice No. 91-22, "Four Plant Outage Events Involving Loss of AC Power or Coolant Spills" described the Diablo Canyon Unit 1 event, as well as three other shutdown power interruption events.

The Palo Verde Unit 3 event occurred while shutdown when a mobile crane grounded one of two offsite 13.8 kV power transmission lines to the facility. The operators mistakenly deenergized the wrong transmission line in an attempt to clear the ground, before deenergizing the correct line. Although offsite power was never simultaneously lost to both safety related 4.16 kilovolt (kV) buses, the plant response to the event was similar to the response for a loss of offsite power event.

The AIT consisted of three Region V staff inspectors and one Headquarters expert on high voltage distribution systems. The AIT Charter (Appendix A) directed that the team verify the circumstances and evaluate the significance of the event.

The inspection was conducted from November 16-19, 1991. An entrance meeting was held with licensee management on November 16, 1991 at Unit 3. The exit meeting was conducted on November 20, 1991 at corporate headquarters. Appendix J provides a list of attendees at these meetings.

B. Inspection Methodology

After an initial briefing by licensee personnel at the entrance meeting, the AIT interviewed those licensee personnel with direct knowledge of the event, observed testing of the mobile crane, observed inspections of other affected plant equipment, reviewed procedures and records, and interviewed facility managers. The AIT also reviewed relevant charts, logs, written statements, procedures, memoranda, and other documentation during the inspection. Region V management was briefed daily on the progress and preliminary findings of the inspection.

C. Event Summary

On the day of the event, November 15, 1991, Palo Verde Unit 3 was shutdown, at normal operating pressure and temperature. The reactor had automatically tripped the previous day upon sensing of an electrical fault on the phase A main transformer. Subsequent to the trip, plant personnel inspected the main transformer, and discovered that the transformer bushing had been damaged due to electrical arcing.

At 9:09 a.m., work had just been completed to test a new bushing, in preparation for installing it into the transformer. A large, mobile crane which had been used to hoist the bushing free of its packing crate for testing was extended in the vicinity of the main transformer, and the new bushing. The crane operator left the crane to check on the job status. The boom then swung into one phase of the east 13.8 kV transmission lines supplying one half of the offsite power to Unit 3.

A current began to flow through the crane's front outrigger pads to the asphalt and gravel on which the crane was parked.

Incorrect initial reports from witnesses led the Shift Supervisor to direct deenergizing the transmission lines supplying the other half of the offsite power to Unit 3. This resulted in the loss of power to two of the four reactor coolant pumps (RCPs). This error was corrected upon subsequent reports from the scene. Operators restored offsite power through the deenergized lines, and then deenergized the correct lines at 9:22 a.m. This caused the loss of forced circulation, as expected, when power to the only two RCPs which were still running was removed. Natural circulation was confirmed at 9:40 a.m.

Power was also lost to the Class 1E buses coincident with the loss of offsite power to them. The emergency diesel generators (EDGs) started and loaded as designed.

Small fires started around the crane outrigger pads. These were extinguished shortly after the correct transmission lines were deenergized. A Notification of Unusual Event (NUE) was made at 9:28 a.m. because the fire lasted more than 10 minutes. The NUE was terminated at 10:02 a.m. No personnel injuries resulted from the event.

Operators restored forced circulation at 9:50 a.m. The incomplete restoration of non-Class 1E power caused difficulties in restoring some equipment. Forced circulation was interrupted at 10:57 a.m., when an auxiliary operator inadvertently tripped the only running RCP. The RCP was restarted at 11:05 a.m. The licensee restored non-Class 1E power to all but the affected buses by use of bus cross-ties. After inspection and repair of the overhead transmission lines, the electrical distribution system was restored to a normal shutdown alignment.

The reactor was maintained in Hot Standby (Mode 3) throughout the event. There was no heatup of the reactor coolant system due to the transient.

D. AIT Findings and Conclusions

The AIT made numerous observations, findings, and conclusions which are detailed in this report. The following findings and conclusions are considered to be the most significant ones identified:

1. The AIT found that the crane operator left the crane unattended, and the wind blew the crane boom into a 13.8 kV offsite power supply transmission line. The team concluded that the crane operator leaving the crane unattended was the immediate cause for the event.

2. The AIT found that the licensee had not considered it necessary to take any additional actions related to mobile crane controls following its review of the Vogtle and Diablo Canyon events. Moreover, in interviews with personnel directly involved in the event, none of them were aware of the Vogtle or Diablo Canyon events.

   The team concluded that the licensee had not followed up adequately on these events to ensure that events involving mobile equipment and transmission lines were prevented. The AIT considered this to be the root cause of the event.

3. The AIT found that no requirement existed for the continuous presence of a crane operator in the crane when the crane boom was potentially able to contact energized transmission lines. The team concluded that the licensee's procedures were not adequate in this respect.

4. The AIT found that the licensee had procedures which required grounding the crane, required the continuous presence of a signalman and an electrical checker, and required acknowledgement of communications by control room operators. The AIT concluded that if these procedures had been followed, the event would have been significantly less complex.

5. The AIT concluded that confused communications, and lack of formal communication discipline between the control room and other reporting personnel significantly complicated the event, resulting in the deenergization of the wrong transmission line.

6. The AIT found many weaknesses in the job planning process for the transformer bushing job: the work order did not explicitly state any precautions to protect the energized transmission lines, the work order for the work was not available to the supervisor for the work, the substation electricians performing the work had been working for over 24 hours continuously, and the senior site electrician supervising the work was not continuously present at the job. The AIT concluded that job controls for the transformer bushing job were poor.

7. The AIT found that the site specific training program for mobile crane operation at PVNGS was inadequate in that it did not discuss the existing precautions required by station procedures for operating mobile cranes near transmission lines.

8. The AIT found that the crane operator had not received any formal site specific training for mobile crane operation near transmission lines at Palo Verde because he was waived from participation in the formal training program.

9. The AIT concluded that the control room operators had generally responded appropriately throughout the event.. Two exceptions noted were the operator's use of an unapproved method to start a second reactor coolant pump by defeating a protective interlock for the pump, and the auxiliary operator's inadvertent local trip of the only operating reactor coolant pump.

10. The AIT found that the emergency diesel generator automatic load sequencing operated properly in response to a loss of offsite power to the respective engineered safety feature bus.

11. The AIT concluded that the lightning protection for the Unit 3 main transformers was not as effective as industry design practice provides, in that the lightning arresters were too far from the main transformers they were supposed to protect.

II. EVENT NARRATIVE

A. Initial Plant Status

Background Palo Verde is a three-unit facility comprised of essentially identical but separate 1303 MWe Combustion Engineering System-80 nuclear plants. Figure 1 of this report depicts the plan view of the facility.

At the time of the event, Unit 1 was operating at 100% power, Unit 2 was shutdown and defueled for refueling, and Unit 3 was in Hot Standby (Mode 3).

Unit 3 had tripped on November 14, 1991, while operating at 100% power, following an electrical flashover on the high voltage bushing for the "A" phase main transformer, possibly due to a lightning strike. The loss of load also resulted in a reactor cutback prior to the reactor trip on low Departure from Nucleate Boiling Ratio (DNBR). (The reactor trip event will be discussed in Inspection Report 530/91-41.) The Reactor Coolant System (RCS) was being maintained at normal operating pressure (2250 psia) and temperature (560 degrees F) in Hot Standby (Mode 3), and all four Reactor Coolant Pumps (RCPs) were running.

Electrical Distribution System Figure 2 depicts the plant electrical single line diagram. Offsite electrical power is supplied to each unit from the 525 kilovolt (kV) switchyard via two 13.8 kV startup transformers and buses NAN-S05 and NAN-S06 (located in the switchyard) through two sets of transmission lines (east and west, respectively), each comprised of two conductors for each of the three phases. These transmission lines supply power to 13.8 kV buses (NAN-S03 and NAN-S04, respectively), from which Class 1E 4160 volt Engineered Safety Features (ESF) buses (PBA-S03 and PBB-S04, respectively) are powered via two ESF Service Transformers. When shutdown, non-Class 1E loads, including RCPs, are also powered from buses NAN-S03 and NAN-S04. Each unit is provided with two 4160 volt Emergency Diesel Generators (EDGs) connected to their respective ESF buses.

The Main Transformer was tagged out for repairs at the time of the event, precluding backfeeding from the 525 kV switchyard through the unit auxiliary transformer.

Letdown and Charging Subsystems The letdown and charging systems function to regulate the volume of water in the RCS. The charging system also provides seal injection flow to the RCS seals. Normally, the letdown system modulates to remove water from the RCS as it is being added by the operation of the positive displacement charging pumps. This maintains a constant inventory of water in the RCS, as indicated by pressurizer level.

Control Room Staffing At the time of the event, the Control Room was staffed with two Senior Reactor Operators (SROs) (the Shift Supervisor and the Assistant Shift Supervisor) and three Reactor Operators (ROs). Additionally, a Shift Technical Advisor (STA) was assigned to a 24 hour shift, but was not required to be present in the control room.

During this event, which occurred during normal working hours on a Friday, other qualified personnel were available and responded to assist the designated Control Room staff. These included another Assistant Shift Supervisor-qualified SRO and two qualified STAs.

In this report the Primary Operator will be designated RO No. 3, the Secondary Operator will be designated RO No. 2, and the extra (backboards) reactor operator will be designated RO No. 1.

Inoperable Equipment and Abnormal System Alignments All required safety equipment was operable except the B Control Room Ventilation Intake radiation monitor (RU-30), the Fuel Building Effluent radiation monitor (RU-145), the A Core Protection Calculator, and Atmospheric Dump Valve 3J-SGB-HV-185. None of these outages contributed to the event.

Troubleshooting of the Control Element Drive Mechanism Control System (CEDMCS) was in progress to determine the cause of the reactor trip which had occurred the previous day.

RCP 1B was operating with a slightly degraded middle seal. The seals are not safety-related, but function as a barrier to keep reactor coolant from leaking out of the RCS around the RCP shafts. Each seal package consists of three 100% capacity seals.

The phase A main transformer high side bushing had been damaged the day before by an electrical flashover. (See Appendices C and D). Inspection and repair work was in progress. Several work vehicles were in the area in support of the work, including a tank truck into which oil from the transformer had been drained and an oil purifying truck (the Stokes unit).

B. Description of the Event

At approximately 9:00 a.m. (MST) on November 15, 1991, a work crew was using a 35-ton Grove mobile crane to lift a replacement bushing from a shipping crate for inspection. A light breeze (12 mph maximum and 5 mph average wind speed) was blowing. The ungrounded crane was located approximately 40 feet west of the transmission lines between NAN-S05 and NAN-S03, and the bushing crate was adjacent to the wall on the east side of the phase A main transformer. The crane boom was trained to the north and extended approximately 66 feet and was elevated approximately 40 degrees. The front outriggers of the crane were extended onto the asphalt. After the bushing was lowered back into the crate and detached from the crane, the crane operator raised the hook above head level. He then turned off the crane engine, locked the steering wheel (with a chain and padlock), and got out of the crane cab ("house"), apparently without properly setting the swing brake (which prevents rotation of the crane boom).

A few seconds after the crane operator left the crane, the boom started rotating clockwise toward the energized 13.8 kV transmission lines between NAN-S05 and NAN-S03. When the workers noticed this, the crane operator ran to the crane, intending to get in and stop the boom. He was unable to get in immediately because the steps leading to the crane house were no longer aligned with the house door. In less than a minute, an arc was observed as the boom passed under the "B" phase conductors. The boom came to rest against one of the "C" phase conductors a few seconds later, causing a 140 ampere phase-to-ground fault and arcing on the boom. The magnitude of the fault through the ungrounded crane was insufficient to activate protective relays, so the lines remained energized.

The unit oscillograph alarmed at 9:10 a.m., illuminating a low priority annunciator in the Control Room. The alarm response procedure for this alarm required control room operators to monitor the main generator, unit auxiliary transformer, ESF service transformer, and 13.8 kV buses NAN-S01 and NAN-S02 for abnormal operation indications. Second priority actions were to document the indications on the Digital Fault Recorder and attempt to reset the alarm. Operators did not have time to complete this response. In any event, the fault was too small to be readily noticeable on Control Room indicators, and the Digital Fault Recorder information required engineering support for analysis.

A witness immediately called the station emergency number, alerting the site fire department and security personnel that a crane was in contact with energized high voltage lines in Unit 3. The fire department, which is located outside of the Protected Area, responded, arriving at the scene approximately five minutes later.

The Control Room was notified at about 9:11 a.m. of a crane in the high voltage lines, but the communications were inaccurate, resulting in the Shift Supervisor directing that the wrong lines be deenergized. Operators deenergized NAN-S06, which removed power from two of four RCPs and from 4160 volt ESF bus PBB-S04 (see Figure 2). The B EDG started and provided power to Class 1E loads as designed.

At 9:14 a.m., the Control Room was informed that the lines were still energized and that a fire had begun around the crane. The asphalt under the outriggers had started to burn. The Shift Supervisor was now also made aware that no personnel were in the crane. The Shift Supervisor directed that power be restored to NAN-S06 and other major non-Class 1E buses. The Primary Operator was dispatched from the Control Room to act as Fire Team Advisor at the scene.

Control Room personnel held a short briefing regarding the plans to reenergize non-Class 1E loads off of NAN-S06 and to deenergize NAN-S05, as this would result in loss of forced circulation due to the loss of power to the last two RCPs. At 9:20 a.m., power was restored to 13.8 kV buses NAN-S06, NAN-S04, and NAN-S02; to Normal Service Transformer No. 2; and to six 480 volt load centers. The Normal Service Transformers are two 13.8 kV to 4.16kV transformers which each supply nonclass 1E electrical loads to half of the plant. At 9:22 a.m., NAN-S05 was deenergized, and the A EDG started and loaded, providing power to ESF bus PBA-S03. Other effects of the loss of power to non-Class 1E loads included the isolation of letdown and the loss of power to all three instrument air compressors. The backup nitrogen system reacted to provide instrument air header pressure until a compressor was restored at 10:51 a.m.

The Fire Department quickly extinguished the fire, which had resulted in low flames (about 3 feet high and 3 feet wide) around each of the outriggers. The fire was reported out at 9:28 a.m., at which time a Notification of Unusual Event (NUE) was declared due to a fire in the Protected Area lasting greater than 10 minutes, consistent with procedure EPIP-02, "Emergency Classification."

At this time, the crane was slightly tilted, and appeared unstable. The Central Maintenance Electrical Foreman, after discussions with key personnel present at the scene, directed the crane operator to enter the crane and try to extend the right rear outrigger. The crane operator successfully started the crane engine and extended the outrigger as discussed, and then turned off the engine and left the crane again.

C. Event Recovery

The Shift Technical Advisor (STA) and an extra Assistant Shift Supervisor-qualified SRO responded to the Control Room to assist. The STA verified the establishment of natural circulation. The Shift Supervisor assigned the Assistant Shift Supervisor to oversee electrical distribution system restoration and the second SRO to oversee efforts to recover letdown and to restore forced circulation. The Primary Operator returned from Fire Team Advisor duties and resumed his Control Room duties.

At 9:45 a.m., pressurizer level exceeded the Technical Specifications (TS) upper limit of 56%. Pressurizer level was increasing because one charging pump was running to provide seal injection flow to the RCPs. The STA, who had been troubleshooting the restoration of the letdown system, identified the cause a few minutes later. However, pressurizer level reached 68% before letdown was restored at 10:05 a.m.

At 9:50 a.m., RCP 2B was started, restoring forced circulation.

At this time, operators also reenergized most non-Class 1E loads normally supplied from the still deenergized NAN-S05 bus by reenergizing 4160 volt bus NBN-S01 through the crosstie from bus NBN-S02 and NAN-S06. This provided enough power for most loads, but not enough to run RCPs 1A or 2A. Instrument Air Compressor B was restored to service at 9:51 a.m. following restoration of control power from 480 volt motor control center NHN-M02.

The NUE was terminated at 10:02 a.m.

Reactor Operators made three unsuccessful attempts to start RCP 1B during this event. At 10:57 a.m., while performing prerequisites for starting RCP 1B, an Auxiliary Operator inadvertently tripped RCP 2B, resulting in the second loss of forced circulation. RCP 2B was restarted at 11:05 a.m. after the prerequisites for starting it had been satisfied. RCP 1B was started at 11:16 a.m. but tripped after 14 seconds due to the reverse rotation interlock being present. It was ultimately restarted at 2:36 p.m.

Offsite power was restored to ESF bus PBB-S04 at 11:40 a.m. Offsite power to ESF bus PBA-S03 was restored on November 17, 1991, at 9:16 a.m., following inspection and repair of the damaged overhead power lines. The electrical distribution system alignment was restored to normal and RCPs 1A and 2A were subsequently restarted.

III. REVIEW OF PERSONNEL PERFORMANCE

A. Mobile Crane Operation

(1) Mechanics of Crane Operation

This event occurred when the extended boom of a 35 ton mobile, rough terrain crane, Grove Model RT 65S, No. 42117P swung into one phase of the east 13.8 kV transmission lines for Palo Verde Unit 3. This crane was of a model commonly used at the facility.

This crane is self propelled, mounted on a four wheel drive chassis, with a single operator's control cab, which rotates with the boom as the boom pivots completely around (see Figure 3). The boom is telescoping, with three sections which can be extended to 80 feet. The boom can also be elevated in azimuth. Four outriggers can be extended from the chassis, one from each corner, to stabilize the crane.

A bubble level inside the cab can be used by the operator to ensure that the crane is level. The operator can brake the rotation of the boom with three devices: a swing lock, which locks the boom directly forward if the boom is aligned directly forward; a hand swing brake, which is a mechanical linkage, disc brake which is either on or off; and a foot swing brake, which is hydraulically actuated, but which cannot be locked into position.

The load which the crane can safely carry is dependent on how the crane is configured (either all outriggers out or sitting on its four rubber tires), the length of boom extended, the radius of boom extended, and the azimuth of the boom. The load charts and precautions which detail this information are supplied by the manufacturer. They are permanently mounted in the crane cab.

The licensee measured and recorded the position of the crane immediately after the event, after the boom was rotated clear of the transmission line to its approximate initial position, adjacent to the bushing packing crate. The mobile crane was then moved out of the area to a quarantine site. The position of the crane's tires was painted on the ground.

From these measurements, the licensee concluded that prior to the event the operator positioned his crane approximately 50 feet from the bushing, with the boom extended 66 feet, elevated 40 degrees, and trained 9 degrees to the right of straight ahead. Only the front outriggers were extended. The vehicle was level left to right, but the rear was 1.5 degrees lower than the front. As discussed in the next section of the report, this was not an approved crane configuration.

The AIT reviewed the licensee's measurements, and toured the site. The AIT concluded that the licensee's reconstruction was reasonably accurate.

(2) Review of Crane Operator's Performance

The inspectors reviewed the following information related to mobile crane operation:

1. Procedure 30AC-OMP13, "PVNGS Rigging Control," Revision 2, dated 9-26-90

2. Procedure 30AC-9TR02, "Crane Operator Qualification," Revision 2, dated 4-3-91

3. PVNGS Accident Prevention Manual dated 1-4-90

4. Grove Operator and Safety Handbook (Revision 1, dated 10-20-79)

5. Grove RT65S Load Chart (posted in crane's cab)

6. Training Courses NMB09 and NMW09, "Mobile Crane" and "Mobile Crane - Self Study"

The inspectors also interviewed the mobile crane operator, his signalman, and the Central Maintenance foreman responsible for the crane operator's work. The team inspected the site of the event, reviewed as found logs and photographs of the site taken immediately after the event, and reviewed the mobile crane training materials.

The inspectors determined that the licensee had no procedures which described the methods to be used to operate this type of crane. However, the training syllabus appeared adequate to describe the general methods of safe crane operation, the calculation of safe loads for the crane, and avoidance of energized electrical equipment with cranes. The operator's handbook and load chart provided detailed precautions for crane loading and operation.

The inspectors determined from their interviews of the crane operator that the crane operator had left the crane unattended after he had replaced the new bushing in its packing crate. The bushing had been disconnected from the crane hook. Prior to leaving the crane, the operator turned off the engine and locked the steering wheel. He stated that he had engaged the hand brake for the boom prior to leaving. He further stated that he left the crane to find further instructions on whether his services were still needed.

A few seconds after he left the crane it swung steadily into the transmission line. He attempted to reboard the crane but was unable to do so before the crane became energized. He abandoned his attempt to reboard the crane when he felt a tingle in one of his feet as he was about to jump on the left front outrigger. The operator was not injured.

Immediately after the event, and once power to the line was secured, the crane operator was directed to reboard the crane to stabilize it since it was leaning visibly to the right, and was displacing the transmission lines it was contacting. The operator extended the right rear outrigger.

Prior to the event, the operator stated that he had only extended the front two outriggers, and had only leveled the crane right-to-left, not front to back. This nonlevel configuration with only two outriggers out is not authorized by the operator's safety handbook. The handbook stated:

> WARNING: THE OUTRIGGERS MUST BE SET BEFORE ANY OTHER OPERATION OF THE CRANE IS ATTEMPTED, UNLESS LIFTING ON RUBBER. (p. 4-24)

The importance of properly leveling a crane cannot be overstressed. A crane only slightly out of level can quickly encounter a tipping condition. (p. 2-15)

"Lifting on rubber" is operation of the crane with no outriggers out. In that configuration, the handbook and load charts required that the boom swing lock must be engaged. Also, the boom must not be extended over 56 feet, according to the load charts for the crane located in the crane cab. As noted above, the crane was extended about 66 feet at the time of the event.

From the Grove load charts posted in the crane cab, the load capacity of the crane in this configuration was indeterminate. If the outriggers had all been extended, the capacity would have been approximately 12,000 pounds, as compared to the approximately 4,000 pound weight of the bushing and crane hook.

The licensee's training course for mobile cranes taught the precaution to extend all of the outriggers and level the crane. Lesson plan NMB09-00-XC-001 states on page 21:

> 3. Whenever possible fully extend the outriggers for maximum stability.
>
> 4. Insure the crane is level. All load charts are based on the fact that the crane is level.

The AIT concluded that the crane operator had improperly operated the crane when he failed to level it or to extend all outriggers.

Finally, the licensee tested the crane on November 18, 1991. The AIT observed this testing. The team also reviewed the records of maintenance for this crane, and the special inspection of the hand brake that was performed on November 21, 1991. Details of this inspection are provided in Appendix B. This testing and inspection determined that the crane hand swing brake was operating normally, and was capable of stopping the boom's motion in the wind which was present at the time of the event.

(3) Conclusion

The AIT concluded that there was reasonable assurance that the crane operator did not set the handbrake. The AIT also concluded that the wind had blown the unbraked boom into the 13.8 kV transmission lines because the operator had left the crane unattended.

B. Work Planning, Coordination, and Supervision

(1) Work Planning

(i) Work Order Precautions The AIT reviewed the work order for the main transformer phase "A" bushing replacement. In addition, the team interviewed the work planners, electricians, crane operator, crane signalman, and foremen for this work to determine their understanding of the job's requirements.

Work order, No. 526228, was issued on November 14, 1991, to permit the station central maintenance electrical department to troubleshoot and repair the phase "A" main transformer "as required."

The work order which the senior electrician had in his possession referenced the station procedure for conduct of maintenance, 30DP-9MP01, "Conduct of Maintenance." Section 3.5.16 of that procedure required:

Necessary precautions shall be taken whenever work is done, such that the work activity and any tools/equipment used will not accidentally damage or remove equipment from service, thus compromising essential plant safety functions.

That procedure, Section 3.5.9, in turn, referenced procedure 30AC-OMP13, "Rigging Control."

Section 3.9.6.1 of the rigging control procedure required that:

> When working with or around cranes that are within a boom's length of any power line, an electrical checker shall be required. Ensure that a qualified signalman and checker are stationed at all times within view of the operator to warn him when any part of the machine or its load is approaching the minimum safe clearance.

The senior electrician stated that he was not aware of the station rigging control procedure's requirement for an electrical checker for the job.

He also stated that he had not attempted to act as an electrical checker.

Similarly, the transformer crew leadman stated that he was not aware of the procedural requirement for an electrical checker for mobile crane work within a boom's length of energized transmission lines.

The AIT concluded that the nested referencing of the checker precaution in the second subtier work control procedure did not provide an adequate warning for the senior electrician on-the-job concerning operation of mobile cranes in the vicinity of energized transmission lines.

(ii) Distribution of Work Order Amendment The initial work order was not specific concerning how the transformer troubleshooting was to be performed. In particular, no reference was made to testing the replacement bushing. However, it was soon apparent to the workers that the transformer high voltage bushing was damaged, and would have to be replaced.

Amendment A to the work order was prepared to permit the bushing to be replaced by an APS transformer crew from offsite. However, this amendment was not provided to the senior electrician in charge on the job until after the event on November 15, 1991. The amendment had been drafted on November 14, 1991. No one on the job was aware of this amendment, or its provisions.

The amendment for the job stated that the senior electrician was to act as an independent safety observer of the job. This was an important precaution, which resembled the rigging control procedure's precaution discussed in section (i) above in abbreviated form. Also, the amendment clarified that the transformer crew was responsible for supervising its own work.

The AIT concluded that the instructions for this job were not distributed to the job supervisor before the job was conducted.

(iii) Selection of Bushing Test Location

Station central electrical maintenance personnel procured a replacement bushing from the site warehouse. The amended work order did not specify where to test the replacement bushing. The night shift central maintenance electrical foreman had placed the bushing with its crate near the east side of the main transformer. A fork lift was used to transport the bushing. The bushing remained in this position until it was moved in its crate immediately adjacent to the east side of the main transformer. Then the bushing was removed briefly for testing just prior to the event.

This location was close enough to the Doble testing apparatus that the test equipment would not have to be moved to test the bushing (see Appendix I for a discussion of Doble testing). The Doble test apparatus was also to be used to test the main transformer.

In order to perform the Doble testing of the bushing it had to be suspended clear of its packing crate. The dayshift electrical and mechanical central maintenance foremen conferred, and agreed to use a Grove RT65 S mobile crane for this operation. The bushing was 20'9" long, 28" maximum diameter, and weighed 3479 pounds.

The AIT concluded that the bushing location for testing was not carefully considered to minimize the hazard to transmission lines from mobile crane operation.

(iv) Review of the Planners' Understanding of the Job.

The AIT interviewed the work planners for this job. The planners stated that they were not familiar with the details of the testing being conducted, including the need for a mobile crane. Given the planners' lack of knowledge regarding the job's specific tasks, the team concluded that the planners did not have enough information about the job to prepare a work order which would ensure the job was conducted safely.

Conclusion

In summary, the AIT concluded that work planning for this job was inadequate, in that it had not provided adequate precautions to ensure that mobile cranes did not contact energized transmission lines.

(2) Supervision of the Job

On the morning of the event, the workers involved with this job consisted of a transformer crew of three APS electricians from the offsite substation department, one of whom was the lead person for the crew; a senior site central maintenance electrician who was directly supervising the job; a crane operator, and a signalman for the crane operator. In addition the station central maintenance mechanical foreman and electrical foreman had visited the job site and arranged for the crane to be present.

The senior electrician discussed the job with the crane operator, pointed out that the east 13.8 kV transmission lines were energized, and then left the scene to try to arrange for temporary power to a transformer oil purification unit. He was not present at the beginning of the bushing movement with the crane, but returned briefly when the bushing was being replaced in its crate. He then left again to continue the search for temporary power. He became aware of a problem with the bushing

job when the lights went out in the turbine building where he was located.

The amendment to the work order which described the bushing testing to be performed stated that the transformer crews would be working under their own supervision. However, this amendment had not been received by the electrician at the time of the work, and he was not aware of this provision.

The senior electrician was considered to be in charge of the job by his foreman, by the leadman for the transformer crew, and by the crane operator. However, the senior electrician considered his role to be limited to facilitating the job for the transformer crew. The AIT acknowledged his understanding, but concluded that he was the supervisor for the job.

The leadman for the transformer crew was directly controlling the testing of the replacement bushing. The leadman gave instructions to the crane signalman regarding where the bushing needed to be moved.

Conclusion

The AIT concluded that he became the de facto supervisor for the job after the senior electrician left the job.

The AIT concluded that, because of this lack of continuity and clarity of assignments, the licensee's supervision of this job was inadequate.

(3) Prejob Briefing

From the interviews of the personnel directly involved, the AIT found that no one conducted a prejob briefing discussing precautions for crane operation in the vicinity of the transmission lines. As a consequence of this, the crane operator and his signalman were not sure of what was to be done next after they had replaced the bushing in its crate. The crane operator left his crane to seek clarification of his role, precipitating the event. The AIT concluded that the absence of a coordinated prejob briefing was a contributing cause for the event.

(4) Work Hours for Transformer Crew

The leadman for the transformer crew stated that at the time of the event he and his crew had been awake since Thursday morning, the previous day. A licensee representative subsequently confirmed that the leadman had been called out for the job Thursday evening, after they had completed a normal workday and returned to their homes. They arrived on site around 11 p.m. Thursday, and worked through the night on the job. At the time of the event they had been awake approximately thirty hours, and on the job approximately ten hours. Subsequent to the event, his crew continued to work another 17 hours without sleep on the transformer bushing. The AIT concluded that the licensee had

failed to ensure that all personnel working on this job were adequately rested.

C. Operation of Reactor Coolant Pump 1B

During the restoration from partial loss of power on November 15, 1991, three unsuccessful attempts were made to start Reactor Coolant Pump (RCP) 1B. After natural circulation was terminated at 9:50 a.m. by starting RCP 2B, the extra senior reactor operator (SRO) and reactor operator (RO) No. 3 noted that a reverse rotation alarm was indicated for RCP 1B. The extra SRO directed an auxiliary operator (AO) to enter containment and verify by visual observation that RCP 1B was not experiencing reverse rotation. The extra SRO arranged with Health Physics personnel to enter containment. The AO entered the containment at approximately 10:40 a.m. and verified that RCP 1B was not experiencing reverse rotation. The AO notified the control room of his finding.

RO No. 3 then attempted to start RCP 1B at 10:50 a.m. RCP 1B did not start. He sent an AO to the circuit breaker for RCP 1B to visually verify that all associated relays were reset. While evaluating the circuit breaker for RCP 1B, the AO inadvertently tripped RCP 2B at 10:57 a.m. RO No. 3 again started RCP 2B at 11:05 a.m. He then attempted to start RCP 1B again at 11:05 a.m. It failed again to start.

The Shift Supervisor informed RO No. 3 that a special technique for starting RCP 1B existed. It consisted of stopping and then restarting the oil lift pump for RCP 1B prior to starting RCP 1B. This method had previously been used to start RCP 1B. RO No. 3 started RCP 1B using this technique at 11:06 a.m.

RCP 1B tripped after approximately 15 seconds. The STA then assisted the operators in researching the electrical prints for the circuits controlling RCP 1B. It was identified that the speed probe for RCP 1B was deenergized due to panel NNN-D15 being deenergized (See Section III.C.(2) for a discussion of the power supplies to this panel.) The speed probe was energized and RCP 1B was started at 2:36 p.m.

The inspectors reviewed the circumstances involved in the three unsuccessful RCP 1B start attempts. The findings and the conclusions reached follow.

(1) Review of RCP 1B Starting Method

The procedure for starting RCP 1B, Procedure No. 43OP-3RC01, Revision 2, Preliminary Change Notice (PCN) 6, dated October 6, 1991, "Reactor Coolant Pump Operation," did not include the technique used by the operators to start RCP 1B. Control room personnel stated that a temporary procedure change called a Special Variance was being used to start RCP 1B. The inspectors reviewed the control room copy of Procedures 40AC-90P02, "Conduct of Operations," and 43OP-3RC01. The AIT found that no Special Variance had been approved for starting RCP 1B. (The detailed procedural requirements for Special Variances are provided in Appendix F.)

The licensee stated that the method which the operators used to start RCP 1B was intended to overcome an apparent problem with the oil lift pump flow switch. This switch indicated a low oil flow condition even with the oil pump running. The indicated low flow condition locked out starting RCP 1B. The licensee had discovered some time in the past that if the oil lift pump was deenergized and reenergized the low flow lock out would clear for a few seconds. RCP 1B could be started during these few seconds.

The licensee stated that the oil lift pump provided two functions. The first function was to ensure that the thrust bearing reservoir was filled with sufficient oil for continued operation. Procedure 430P-3RC01 required that the oil lift pump be run for seven minutes prior to starting an RCP to ensure the thrust bearing reservoir was filled. The vendor manual, Palo Verde No. N0016.02-205, "Reactor Coolant Pump Instruction Manual," stated that the oil lift pump should be run for several minutes prior to starting an RCP. The manual did not address stopping and restarting the oil lift pump.

The second function of the oil lift pump was to lift the thrust runner off of the thrust pads to eliminate metal to metal contact during an RCP start. Running the oil lift pump during RCP starting was designed to provide sufficient oil pressure to provide the required lift. The inspectors asked control room personnel how they knew that the technique they were using to start RCP 1B would not damage RCP 1B, due to the oil lift pump not continuously running prior to starting RCP 1B. Control room personnel stated that site engineering personnel had evaluated and agreed with the technique.

The inspectors then asked site engineering personnel for the basis of their evaluation that RCP 1B would not be damaged by the technique being used to start RCP 1B. During the inspection, the licensee reviewed the system design, the vendor manual, the inspectors' concerns and the low oil pump flow indication. The licensee concluded that there should be no detrimental effects in starting RCP 1B after the oil lift pump was stopped and immediately restarted. This conclusion was based on the evaluation that oil pump flow was normal. The licensee stated that normal flow was indicated by normal oil pump discharge pressure, by expected reservoir level changes and by expected RCP 1B bearing running temperatures. The licensee also determined that the vendor had accidentally started and stopped a pump 20 times without the oil lift pump operating during initial prototype testing at the vendor's test facility. The vendor reported to the licensee that no damage to the thrust bearing had occurred from this experience.

The inspectors reached two conclusions with respect to the operation of RCP 1B:

1. The licensee evaluation that RCP 1B was not damaged by the starting technique was technically adequate. This conclusion was based on a review of the licensee's evaluation, a review of the system design, a review of the pump vendor manual and vendor testing which indicated no damage to the thrust bearing had occurred with no oil lift pump operation.

2. The inspectors concluded that the technique used by the operators to bypass the low oil flow safety interlock without a formal written procedure in accordance with Procedure No. 40AC-90P02 was inappropriate, and contrary to the requirements of the licensee's procedure for conduct of operations, 40AC-90P02.

   Procedure No. 40AC-90P02 clearly indicated that all operations would be done in accordance with an approved procedure. The inspectors asked the licensee if any other undocumented operational practices existed. The licensee stated that they were not aware of any, but no specific search for them had been performed.

   Although in this case the licensee concluded that RCP 1B was not damaged by the starting technique, the inspectors were concerned that other informal, undocumented operational techniques not in accordance with Procedure 40AC-90P02 might also exist. These informal practices could lead to damage to safety related equipment or cause unanalyzed increases in accident probabilities.

(2) <u>Power Supply for RCP 1B Speed Sensor</u>

The speed sensor for RCP 1B was energized via 120 volt alternating current (ac) 60 Hz non-Class 1E electrical power by power panel NNN-D15. The procedure for starting RCP 1B, Procedure No. 43OP-3RC01, Prerequisite 5.2.4, required that panel NNN-D15 be energized before starting RCP 1B.

There were two sources of power to panel NNN-D15. One source of power was via the NAN-S03 to NAN-S05, east, 13.8 kV line which was contacted by the crane. This line was deenergized. The other source of power was via the energized NAN-S04 to NAN-S06, west, 13.8 kV line through 13.8 kV to the 480 V non-Class 1E load center supply breaker NNN-S02D. Breaker NNN-S02D would not initially close causing the the speed sensor to deenergize when the NAN-S03 to NAN-S05 line was deenergized. (See Section VII.C of this report for further details.) When the speed sensor was deenergized a reverse rotation alarm was produced in the control room for RCP 1B. The speed sensor provided a signal which would trip RCP 1B on zero speed or reverse rotation. By design, this signal was blocked for 14 seconds during starting of RCP 1B.

However, the extra assistant SRO and RO No. 3 stated that they did not know that a reverse rotation alarm would be received if the speed sensor was deenergized. The extra assistant shift supervisor stated that he believed that all the RCP 1B starting prerequisites had been verified by the ROs. RO No. 3 stated that he verified all the prerequisites except those dealing with electrical power availability. RO No. 3 stated that initially there were insufficient AOs available to check availability of all the power sources listed in the prerequisites for starting RCP 1B. RO No. 3 stated that prior to attempting to start RCP 1B he did not remember whether he forgot that the prerequisites had not been completed, of if he had decided to attempt to start RCP 1B knowing that all the required power might not be available.

The inspectors noted that the conduct of shift operations procedure, 40AC-90P02, treated prerequisites as requirements and directed that if a prerequisite was altered or deleted, then the alteration or deletion was to be authorized by an approved Special Variance (See Appendix F). In addition, the inspectors noted that since RCP 2B was providing adequate reactor cooling at the time, there was no apparent urgency in starting RCP 1B.

The inspectors concluded that attempting to start RCP 1B without formally verifying the procedure prerequisites was inappropriate, and contrary to the conduct of shift operations procedural requirements.

D. Operation of Reactor Coolant Pump 2B

RCP 2B was started at 10:50 a.m. after approximately 28 minutes using natural circulation cooling. The pump operated normally for approximately 1 hour and 7 minutes. The pump was then accidentally tripped by an AO.

After the first unsuccessful attempt to start RCP 1B at 10:50 a.m. RO No. 3 sent an AO to the circuit breaker for RCP 1B to look for problems which would have prevented starting RCP 1B. The circuit breaker for RCP 2B was located immediately adjacent and to the right of the circuit breaker for RCP 1B. When the AO approached the breakers he heard a clicking noise coming from the circuit breaker for RCP 2B. The AO placed his right hand on the local control switch handle on the circuit breaker for RCP 2B to see if there was any noticeable vibration. While still holding the handle the AO leaned to the left to observe the relays associated with the circuit breaker for RCP 1B. As he was leaning he accidentally turned the handle to the trip position and the circuit breaker tripped to the open position. The AO immediately notified the control room. RCP 2B was again started, approximately eight minutes following its trip.

The AO demonstrated his actions to the inspectors. A low clicking noise could be heard coming from both the circuit breaker cubicles for RCP 1B and RCP 2B which were both running at the time. The AO indicated that this was the noise he had previously heard. The inspectors noted that the clicking sound was coming from the "running time" indicator. The inspectors considered the clicking noise to be normal for the "running time" indicator based on their previous experience.

The inspectors concluded that the tripping of the circuit breaker for RCP 2B was inadvertent, and that RCP 2B had functioned normally.

E. Pressurizer Inoperability

(1) Sequence of Events, Operator Actions, and Precursors

Power was removed from 13.8 kV bus NAN-S05 at 9:22 a.m. As a result, power was lost to the only operating RCPs. Letdown was lost at this time due to the loss of the 13.8 kV bus. Operators secured all but but one 44 gpm charging pump. The addition of 44 gpm of water to the RCS via the charging system, and the absence of letdown as a removal path, resulted in a steadily increasing pressurizer level. At 9:45 a.m., pressurizer level reached the Technical Specification (TS) operability limit of 56%. At 9:50 a.m., operators restarted RCP 2B, restoring forced circulation. At about the same time, the Shift Technical Advisor (STA) advised the control room operators how to reenergize power to CHB-UV-523, the letdown system inside containment isolation valve, which had been deenergized. Letdown was restored at 10:05 a.m.

During this event, the AIT found that operators had intentionally allowed pressurizer level to become administratively inoperable, as defined by Technical Specifications (TS) Limiting Condition for Operation (LCO) 3.4.3., by failing to secure charging before pressurizer level exceeded 56%.

The AIT determined from interviews of operators that the reason why the operators did not secure charging and isolate seal injection and RCP bleedoff, leaving the RCPs off, was their greater concern for restarting a RCP with seal injection, thus restoring forced circulation of the RCS. They expressed concern that operating the RCP without seal injection might have degraded its seals.

Operators considered that it was important to maintain seal injection flow. The AIT found that several recent events affecting RCP seals had highlighted the preferred normal operational procedures for RCP seal operation to them. These events are detailed in Appendix G.

In July 1991, the licensee determined that there were no time restrictions on operating the RCPs with seal injection isolated as long as Nuclear Cooling Water continued to be supplied to the seal coolers. The RCP technical manual acknowledges this as an acceptable abnormal mode of operation, since the RCP auxiliary impeller and jet pump provide an alternate supply of seal injection. However, the technical manual recommends that this not be a normal mode of operation because this flowpath bypasses the seal injection filters and could contaminate and possible degrade the RCP seals.

The AIT found that operation of RCPs without seal injection had occurred in the past, and was approved as an abnormal operational method, but was not the preferred normal method of RCP operation.

(2) Design Features

During the event, a few minutes after exceeding the pressurizer TS limit, the STA determined that restoration of letdown was being prevented by the absence of power to flow switch 3J-NCN-FS-L613 for Nuclear Cooling Water flow to the Letdown Heat Exchanger. This flow switch had contacts in the control circuit for CHB-UV-523, the inside-containment isolation valve in the letdown line. When the switch was deenergized, its contacts prevented CHB-UV-523 from being opened remotely.

This switch is only powered off of a 120 volt distribution panel ultimately supplied by 13.8 kV bus NAN-S01 through breaker NNN-S01G. The electrical lineup for initiation of letdown, in procedure 430P-3CH01, "CVCS Normal Operations," omitted this necessary configuration. Once the STA identified this interlock as the problem at about 9:50 a.m., operators took about 15 minutes to restore power, warm up the letdown system, and initiate letdown.

Operators had restored power to the standby Nuclear Cooling Water (NCW) pumps before removing power from NAN-S01, which powered the running NCW pump. They intended to ensure that Nuclear Cooling Water flow would not be interrupted when power was lost to the running Nuclear Cooling Water pump. However, this effort overlooked the loss of power to the flow switch, since the flow switch was not designed with an alternate power source or feature to be bypassed upon loss of power.

The AIT found that the letdown system was designed so that the loss of a single power source would result in the loss of letdown. The AIT noted that although letdown was not a safety-related subsystem, it was necessary to conduct normal plant operations.

(3) Procedures

Abnormal Operating Procedure 43AO-3ZZ37, "Loss of Letdown Flow," was in use during this event. The procedure is written from the perspective of being initially in Modes 1 or 2 (Power Operation or Startup). It cautions operators that "loss of letdown for an extended period of time may impact TS 3.4.3 concerning pressurizer operability."

The section of the procedure titled "Plant Operation with Extended Loss of Letdown" instructs the operators to stop seal injection flow and stop the operating charging pumps when the pressurizer level reaches 55%. Additionally, the procedure advises that "Depending upon existing plant conditions and the estimated time to recover letdown, operation may continue by securing seal injection flow and stopping the running charging pumps, to allow pressurizer level to decrease. Factors that are to be considered are: time in life, existing degraded RCP seal packages, and outages scheduled in the near future."

The section entitled "Plant Shutdown on Sustained Loss of Letdown Flow" advises that "if a plant shutdown may be necessary or desirable when letdown is not available, plant shutdown/cooldown may be accomplished in accordance with operating procedures . . . if the following factors are considered and accounted for: . . . during cooldown . . . avoid taking the pressurizer solid . . . by . . . maintaining pressurizer level 33 - 55%. Pressurizer level can only be maintained by manually cycling the charging pumps . . . If the use of Auxiliary Spray is required (i.e., during Natural Circulation conditions) cycle the charging pumps as necessary to support the Auxiliary Spray."

Abnormal Operating Procedure 43AO-3ZZ29, "Reactor Coolant Pump and Motor Emergency," states that "The RCPs may be maintained in the hot standby condition for an indefinite period of time with either [Nuclear Cooling Water] flow or seal injection lost (but not both) provided: . . . If seal injection flow is lost anytime an RCP is in hot standby, ensure that the controlled bleedoff valve in the affected pump(s) is closed within 1-minute."

In contrast, normal operating Procedure 43OP-3CH03, "Reactor Coolant Pump Seal Injection System," cautioned operators that "Seal injection shall be in operation whenever RCS temperature is [above] 150 degrees F or pressure is above 150 psia" and that "to extend seal life, seal injection should be supplied to the RCPs whenever RCS level is above the top of the cold legs."

The alarm response procedure for the pressurizer trouble annunciator, 43AL-3RK4A, directed operators to restore pressurizer level by automatic or manual control of letdown. The AIT found that this procedure did not appear to address the loss of letdown condition.

The licensee concluded that control room operators followed these procedures, and performed as expected. However, licensee personnel stated that the procedures did not fit the situation well.

The AIT interpreted the loss of letdown procedure, 45AO-3ZZ37, to require the operators to secure charging and isolate RCP controlled bleedoff before exceeding 55% pressurizer level. In addition, it permitted subsequent cycling of the charging pumps as necessary for auxiliary spray and RCS makeup. Both sections of this procedure required that charging pumps be secured and pressurizer level maintained below 55%, and one section specifically directs seal injection to be secured if necessary in order to allow the level to be maintained below 55%. The other procedures discussed permitted seal injection to be isolated indefinitely while RCPs are secured.

(4) Conclusions

The AIT considered that the decision to start an RCP should have been made independently of the decision to secure a charging pump. Specifically, at the time forced circulation was restored, natural circulation was effectively cooling the RCS, and there was no urgency to restore it until the normal seal injection and letdown alignments to operate the RCP normally could be restored.

F. Communications

(1) Initial Reports

During the initial minutes of the event, the Shift Supervisor understood that the crane was in contact with the 13.8 kV power lines between NAN-S06 and NAN-S04, which are located on the west side of the transformer yard, when in fact, the crane was in contact with power lines between 13.8 kV buses NAN-S05 and NAN-S03, on the east side of the transformer yard.

The first person to call the Control Room reached the Assistant Shift Supervisor. The Assistant Shift Supervisor could not tell what the caller was trying to say because the caller's speech was unintelligible. The Assistant Shift Supervisor gave the telephone to the Shift Supervisor, apparently at the same time that the caller gave the telephone to another person. This second person told the Shift Supervisor that a crane was in contact with lines "from NAN-S06," using the plant terminology that persons familiar with the electrical distribution system would use. The Shift Supervisor, knowing that crane work was in progress for the Main Transformer "A" phase, but not being aware of any work near the lines from NAN-S06, challenged the caller by asking if he meant the lines to the east or to the west. The

caller confirmed his previous statement by stating that the crane was in the lines to the west. Someone else told the caller that it was the lines to the east, and the caller then corrected himself. When interviewed, the Shift Supervisor stated that he did not recall hearing the correction. The caller stated that he thought the Shift Supervisor acknowledged his correction. The Shift Supervisor did not know the identity of the caller. The Shift Supervisor stated that, on the basis of this call, he directed deenergizing bus NAN-S06.

Over the next few minutes, several radio and telephone communications were received in the Control Room related to the event. However, specific details, such as whom any of the calls were from or what was said, or whether the information came by telephone or radio, were not able to be recalled by any of the Control Room operators. Operators stated that they "had a sense" or "understood" that the power lines were still energized and that no one was in the crane. The Shift Supervisor understood from these communications that the wrong lines had been deenergized and that it was probably safe to reenergize the lines from NAN-S06. He ordered NAN-S06 to be reenergized without positive confirmation that it was safe to do so.

Procedure 40AC-90P02, "Conduct of Shift Operations," discusses communications. Section 3.2.5.1 states that "Formality in communications will be emphasized to reduce operating errors due to assumptions, ambiguous directions, and misunderstandings between operations personnel." Section 3.2.5.2.3 states that "all communications directing or reporting completion of an operating activity must include ... identification of the originator and intended recipient if other than face to face communication ... identification of each valve or component ... [and] acknowledgment of receipt and understanding of direction including as a minimum repeating back each valve or component ... "

The AIT concluded that these elements of communications had not been thoroughly followed during the early part of this event in communications with personnel outside the Control Room. This substantially complicated the event, when the wrong 13.8 kV bus was deenergized.

(2) <u>Communications Between Control Room Operators</u>

The communications between operators in the Control Room throughout the event appeared to be good and consistent with plant procedures. Coordination between operators performing parallel activities was sufficient to avoid problems. Proper communications following the inadvertent trip of RCP 2B led to

prompt restoration of the pump to service. The AIT concluded that these communications were effective.

(3) Station Emergency Reporting Room Operators

The Station Emergency telephone number (4444) is intended for reporting of fire, medical, or other similar emergencies to site emergency response personnel. During the event at least four people called this number, which was continuously monitored by security personnel with repeaters at the Fire Department and Medical Facility. However, the telephone log maintained by Security only indicated receipt of one call. Additionally, one caller, the extra Assistant Shift Supervisor who responded to the Control Room during the event, called this number several minutes after the event initiation but got no answer after ten rings.

The AIT concluded that this emergency reporting system was not effective in capturing multiple calls during an emergency situation. The AIT observed that this incapacity could potentially result in a second unrelated emergency response condition not receiving the appropriate response.

G. Effectiveness of the Fire Team Advisor

The AIT concluded that the Fire Team Advisor (FTA) was not effective because of his late arrival on the scene, his inoperable radio, and the short duration of the fire. The details of this determination are provided in Appendix H.

IV. LICENSEE RESPONSE TO VOGTLE AND DIABLO CANYON INFORMATION

A. NRC Notification of Precursor Events

The NRC formally informed APS of precursor events at Vogtle and Diablo Canyon in the following references:

1. NRC Information Notice No. 90-25, "Loss of Vital AC Power with Subsequent Reactor Coolant System Heat-Up," dated April 16, 1990.

2. NRC Information Notice No. 90-25, Supplement 1, same subject, dated March 11, 1991.

3. Letter T. E. Murley (NRC) to W. F. Conway (APS) dated March 21, 1991, "Operational Events while Shutdown."

4. NUREG-1410, "Loss of Vital AC Power and the Residual Heat Removal System During Mid-Loop Operations at Vogtle Unit 1 on March 20, 1990," published June, 1990.

Reference (2) was issued by the NRC to give all licensees additional information regarding switchyard administrative control, and referred to findings from Reference (4).

Both of these events were initiated by mobile equipment affecting offsite power transmission lines to the facility. In the Vogtle event, a fuel truck backed into an offsite power transmission line support structure, damaging it, and causing loss of offsite power to the facility. At Diablo Canyon, a mobile crane boom was moved too close to an energized offsite power transmission line, causing a loss of offsite power to the facility. In Reference (2), the NRC advised all licensees:

Therefore, particularly during plant outages, activities and hazardous materials in switchyards and protected areas need to be controlled properly to prevent an event similar to the Vogtle event.

In Reference (3), the NRC cautioned APS that:

Because of the potential for loss of a critical safety function in these and similar events, I believe a high level of management attention is required in the planning, coordination, and execution of shutdown operations.

References (2) and (4) cited two other events, at Crystal River in 1987, and at Quad Cities in 1985 which occurred due to unsafe work contacting offsite power transmission lines. NUREG-1410 noted that the lessons learned from these two events were provided to the industry in operating experience documents that contained actions for the industry to consider.

B. <u>Licensee Action in Response to NRC Notifications</u>

The AIT determined that the licensee had received the referenced industry reports and the NRC Information Notices, and had aggregated all corrective actions for these advisory documents under a review of Reference (4), NUREG-1410. The Nuclear Licensing organization coordinated the responses of other APS departments to these documents. The licensee provided information concerning the status of their actions.

The licensee identified many areas for review from NUREG-1410 and related documents. Among these, the AIT reviewed the licensee's response in three areas related to this inspection: control of activities in the switchyard, operation of motor vehicles, and control of combustibles and other materials in the switchyard.

The AIT determined that prior to the event, the Maintenance Standards department had reviewed the procedures for control of activities in the switchyard on two occasions in 1991. That department concluded each time that the existing procedures and controls were sufficient.

Similarly, the Health and Safety Department, Fire Protection, Security Departments, and Training Departments all reviewed portions of station procedures and programs for which they were responsible. Collectively, they concluded that there were sufficient controls for operation of mobile cranes near transmission lines. They also concluded that there were sufficient controls for combustibles within transformer areas.

The Health and Safety Department did, however, initiate a request to study the installation of vehicle barriers to protect transmission line towers, and a request for additional training for occasional operators of large vehicles. The AIT noted that at least one temporary vehicle barrier had been installed around one of the 525 kV transmission line support structures at Unit 2.

During the inspection, the Licensing Department manager stated that the Maintenance Standards Department conclusion that procedures for control of activities in the switchyard were adequate was still under review by the Licensing Department, but that the control of combustibles and of motor vehicles issues were considered to be completed.

The AIT reviewed the procedures cited by the departments in support of their conclusion that the existing procedures were adequate. These included:

1. PVNGS Accident Prevention Manual
2. Procedure, 14AC-OFP03, "Control of Transient Combustibles,"
3. Security Lesson Plan No. 200-C-09, "Vehicle Access Control,"
4. Procedure 30AC-9ZZ01, "Work Control Process,"
5. Procedure 30DP-WP02, "Work Order Development,"

The AIT observed that all of these documents had been developed prior to the Vogtle and Diablo Canyon events. None of them referenced any special measures for control of activities and hazardous materials in switchyards during outages. The measures which they did contain were either very general precautions to avoid hazardous activities, or were precautions applicable throughout the company in any work (such as grounding mobile equipment, maintaining separation distances from energized lines, and requiring ground guides for vehicles that were backing). It appeared to the AIT that no substantive reassessment of the hazard posed by mobile equipment in proximity to transmission lines had been performed subsequent to the Vogtle and Diablo Canyon notifications.

C. Conclusions

The AIT found that, prior to the event, the licensee had not identified any additional controls such as a safety review of the job on use of mobile cranes near energized transmission lines, or on the storage of combustible materials in the switchyard. The AIT concluded that the licensee had not performed a substantive review of this issue, and had missed an opportunity to prevent the event.

V. ADEQUACY OF TRAINING

A. Crane Operator's Training

The inspectors reviewed the crane operator's training record, and discussed it with training department supervisory personnel. These personnel stated that the operator had passed a self-study version of the mobile crane course, NMW09, in 1989. This operator was a contractor who had worked at Palo Verde periodically since 1986. He had been waived from further training in 1991 when he returned to work at the site.

The AIT observed that the crane operator was an experienced operating engineer, and was quite familiar with the mechanics of operating the Grove RT65S crane. The AIT found that the operator had not received any site specific training on special precautions required for mobile crane operation near transmission lines.

B. Mobile Crane Operator Course

The AIT reviewed the lesson plans for the licensee's mobile crane course, NMB09. These plans did not contain adequate instructions for mobile crane operation near the Palo Verde transmission lines. Specifically, the plans did not discuss the station rigging control procedure requirement for an electrical checker when working within a boom's length of energized electrical equipment. Also, they did not mention the events at Vogtle or Diablo Canyon. Finally, the lesson plans did not reference the PVNGS Accident Prevention Manual requirements to ground mobile cranes when working in the vicinity of energized electrical equipment. However, the plans did discuss the minimum separation distances at Palo Verde for a boom from energized equipment. They amply illustrated the general hazards of crane operation near energized equipment with viewgraphs, and with lesson plan text. The AIT concluded that the licensee's mobile crane training program was too limited in scope, due to the omissions discussed above.

C. Other Switchyard Safety Training

The AIT observed that none of the personnel directly involved with this event could recall being trained about the lessons learned from the Vogtle or Diablo Canyon events.

The team determined that central maintenance electricians had received a related industry events training lesson. This lesson included a discussion of the 1985 loss of offsite power at Quad

Cities referred to briefly in Information Notice 90-25, Supplement 1, along with a discussion of five other events. The lesson plan for this training contained a reminder for the electricians that:

> "Special precautions should be considered for activities in the vicinity of the incoming and outgoing transmission lines."

The senior electrician supervising the job received this training on June 18, 1991.

The AIT concluded that for this individual, the training he had received had not been effective, in that he considered no special precautions for the job he was supervising, when they were appropriate.

VI. ADEQUACY OF PROCEDURES

A. Control of Switchyard Activities

As previously discussed in Section III A (2) of this report, the team determined that the licensee's procedures to control mobile crane operations had some precautions to prevent a crane from contacting energized equipment. The licensee considered these precautions adequate prior to this event. These precautions were:

1. The Palo Verde Accident Prevention Manual (Section 29.9 (c)) required that mobile cranes be grounded when working "in the vicinity of" energized high voltage equipment. The term "in the vicinity of" was ambiguous. The AIT observed that if the crane had been grounded as required, the 13.8 kV breaker protection scheme would likely have quickly interrupted the fault, avoiding the fire and and operation of the plant in natural circulation which occurred.

2. The same manual (Section 29.7 (c)) required at least ten feet of separation to be maintained between cranes and 13.8 kV energized lines when operating "in close proximity to energized electrical systems." No methods to ensure this separation was maintained were specified.

3. The Palo Verde rigging control procedure, 30AC-OMP13, Section 3.9.6.1, required an electrical checker when working within a boom's length of any power line at all times to warn the operator when any part of the crane was approaching the minimum safe clearance. The AIT found that none of the personnel directly involved with this event were aware of this provision, or what the term "electrical checker" meant in this context.

   The same procedure, Section 3.23.1, required a safety evaluation for operation or temporary storage of mobile cranes in the vicinity of safety related structures, equipment and

components, but did not provide for any similar review of operation near offsite power transmission lines or equipment.

The AIT noted the following weaknesses in the station procedures:

1. There was no requirement for the crane operator to remain in his crane at all times.

2. There was no requirement for the crane operator to positively lock his crane boom with the swing lock mechanism, nor to retract the boom.

3. There was no requirement for a prejob briefing of the specific hazards of crane operation in the vicinity of high voltage energized equipment.

4. There was no requirement for a safety review of the job planning, to include mitigation of combustibles used on the job or other job specific precautions.

The AIT concluded that the licensee's procedures for control of equipment operation near enough to potentially affect energized offsite power supplies were insufficient, due to the omissions discussed above.

B. Control of Combustibles in the Switchyard

The fire which resulted from this event was minor, and was readily controlled by the station fire department. The AIT noted that one of the findings and conclusions of NUREG-1410, the Vogtle event investigation report, was that there were no specific restrictions to control combustibles and other hazardous materials within the switchyard. NUREG-1410 stated that if the fuel and lubricants truck which was in the switchyard for approved work had ignited, the damage to the switchyard could have been more severe.

The AIT observed from photographs taken at the scene shortly after the event that there were several large vehicles in the immediate vicinity of the mobile crane and the phase "A" main transformer. These included two mobile aerial hoists, a van, a trailer, three large transportable oil tanks, and two portable generating units. Each of these vehicles were potentially very combustible, given a high enough intensity ignition source. From interviews of fire protection personnel, the AIT found that no special consideration had been given to fire prevention in the area due to the additional combustibles from the fuel and oil on these vehicles, in particular the large trailer mounted oil tanks.

The AIT found that the licensee's procedure 14AC-OFP03, "Control of Transient Combustibles," did not provide for any special review or consideration of how much fuel and oil could be brought into the transformer areas.

The AIT concluded that, as at Vogtle, the damage done by the mobile crane could have been more severe if electrical arcing had ignited the fuel or hydraulic oil on the mobile crane, and if this fire had involved the other vehicles. The AIT was concerned that the the main transformer job had not received a specific fire prevention review.

C. Verification of Natural Circulation

The STA verified natural circulation at approximately 9:40 a.m., eighteen minutes after the loss of forced circulation, using procedure 43EP-3ZZ01, "Emergency Operations," Appendix E. This procedure directs the operator to "verify natural circulation flow is established by performing flow chart Figure 1."

The AIT confirmed the natural circulation had occurred through the review of the Unit 3 strip charts in conjunction with the procedure's flow chart. However, in reviewing Figure 1 of the procedure, the AIT found that in other cases where some of the natural circulation criteria might not be met, the flow chart would not definitively conclude that natural circulation had not been established. Instead, the flow chart would become a procedure for restoration of natural circulation.

The AIT concluded that the natural circulation verification flow chart was weak in that it would not result in an explicit conclusion that natural circulation was not established when the criteria for natural circulation were not satisfied.

VII. REVIEW OF EQUIPMENT PERFORMANCE

Several minor equipment failures occurred as a result of the interruptions of offsite power. These affected the operator's followup actions, but did not worsen the plant transient. In addition, the AIT inspected the damaged phase of the west 13.8 kV transmission line. These issues are discussed in this section.

A. Emergency Diesel Generator System Performance

When the control room operator deenergized NAN-S06, which resulted in a loss of NAN-S04 and subsequently the loss of Class 1E bus PBB-S04, emergency diesel generator (EDG) DGB-G02 started. It came up to rated speed and voltage and connected to PBB-S04. Similarly, when NAN-S05 was deenergized, which resulted in a loss of NAN-S03 and subsequently the loss of Class 1E bus PAB-S03, EDG DGB-G01 started, came up to rated speed and voltage and connected to the Class 1E bus PBA-S03. This indicated that the Class 1E buses PBB-S04 and PBA-S03 shed their loads and connected to their respective EDGs as designed.

The inspectors noted that the EDGs energized their respective safety buses in all of the loss of offsite power and partial loss of power events at Palo Verde reviewed (see Appendix E). The inspectors concluded that proper operation of the EDGs had minimized the potential consequences of a number of these events, including the most recent one.

B. 13.8 kV Transmission Line NAN-S03 to NAN-S05

(1) Adequacy of Ground Fault Protection

The AIT determined that the licensee had used GE Model 12 IFC 53A6A relays for the 13.8 kV bus ground overcurrent protection with a current setting of 320 amps at Tap 0.4 and Time Dial 7. The fault recorder recorded a maximum phase to ground fault current of 140 amps when the crane boom was in contact with phase C of the 13.8 kV lines. The inspectors reviewed the calculations and the relay settings for the phase to ground fault protection and found them to be adequate. However, the phase to ground fault current was only 140 amps while the relay was set at 320 amps. The AIT considered that, if the crane had been grounded, the phase to ground fault relay would have picked up and isolated the fault.

(2) Damage to 13.8 kV Line

The licensee inspected the 13.8 kV line contacted by the crane for damage. The line was composed of two 2156 thousand circular millimeter conductors per phase. One indentation, perpendicular to the line, was noted in five strands on one of the two lines for phase C. The indentation was noted to be a maximum of 1/16 of an inch deep. No strand was noted to be indented more than about 1/4 of the strand depth.

The licensee noted that there were no cut strands. The licensee also noted a smaller indentation on the other line for phase C and some minor scrapes on both lines for phase C. No damage was noted on the lines for phases A and B. The licensee concluded that the crane had not put any unusual stress on the phase C lines.

The licensee cleaned off the scraped areas of the phase C lines. The licensee concluded that the existing lines were adequate.

The inspectors viewed the string of insulators between the two H-Frames supporting the conductors from the ground, and saw no damage. The inspectors reviewed the licensee's actions and inspected closely the area of the lines contacted by the crane.

Based on the review of the licensee's evaluation and observation of the damage, the inspectors concluded that the lines were acceptable for continued operation.

C. 13.8 KV Load Center Non Class 1E Circuit Breaker Performance

After control room personnel realized that the crane was contacting the NAN-S03 to NAN-S05 line, the NAN-S04 to NAN-S06 line was reenergized at 9:20 a.m. Prior to deenergizing the NAN-S03 to NAN-S05 line, RO No. 2 attempted to close four 13.8 kV non-class 1E load center circuit breakers. One of these four circuit breakers, NAN-S02D, would not close. At 1:39 p.m., RO No. 2 tried to close the remaining 13.8 kV non-class 1E circuit breakers fed from NAN-S04 to NAN-S06. One of these circuit breakers, NAN-S02G, would not close.

Electrical maintenance personnel were dispatched to investigate why the circuit breakers would not close.

Maintenance personnel racked circuit breaker NAN-S02D down to the test position and were able to open and close the circuit breaker. Maintenance personnel then determined that the circuit breaker 86 lock out relay had secondary contacts which were not making a connection necessary for control room operation. Maintenance personnel cleaned the contacts and determined that the circuit was satisfactory for control room operation of the circuit breaker. Circuit breaker NAN-S02D was closed to support starting of RCP 1B as discussed in Section III.C (2).

The failure of NAN-S02G made it impossible to remotely completely shut the discharge valve for circulating water pump D. The pump was deenergized, and received high bearing temperature alarms for some time, apparently as a result of the discharge valve being open with the pump deenergized. The control room operators were concerned about this condition, and expedited the troubleshooting of this breaker.

Maintenance personnel racked circuit breaker NAN-S02G down to the test position and were unable to open and close the circuit breaker. Maintenance personnel further removed the circuit breaker and determined that secondary contact number 4 fingers were compressed and not making good contact. Maintenance personnel spread the fingers and verified proper circuit breaker operation. Circuit breaker NAN-S02G was successfully closed from the control room some time after this repair was completed.

The AIT concluded that failure of 13.8 kV load center circuit breaker NAN-S02D left the RCP 1B speed sensor deenergized and delayed starting RCP 1B. The basis for this conclusion is discussed in more detail in Section III.C (2). Considering that adequate natural circulation cooling existed at the time, the team considered that the delay in starting RCP 1B was not significant. Therefore, the inspectors concluded that failure of the 13.8 kV non-1E load center supply circuit breakers to close did not interfere with necessary recovery actions for this event.

However, the AIT also concluded that failure of 13.8 kV load center circuit breakers NAN-S02G and NAN-S02D added to the event recovery workload of the control room operators.

VIII. REVIEW OF QUALITY ASSURANCE ACTIVITIES

A. Immediate Corrective Actions Taken by the Licensee

Immediately after the event occurred, the Director of Site Maintenance issued interim guidelines for mobile crane operation, and conducted an extensive event investigation.

The interim guidelines for mobile crane usage reiterated existing station procedural requirements, and added several new precautions. The requirements which were restated were: minimum separation distance requirements from energized lines, and grounding of mobile cranes near high voltage equipment.

The new precautions added guidelines that: crane operators were to stow and lock their cranes before leaving them; crane operators were to level and stabilize their cranes before using them; foremen were to conduct pre-job briefings which detailed the precautions to be used with cranes and energized equipment; and work orders would document the precautions used.

The AIT reviewed the interim guidelines, and concluded that the guidelines provided reasonable assurance that mobile cranes would be adequately controlled near energized equipment, provided the guidelines were observed.

B. Licensee Response to Previous Losses of Onsite Power at Palo Verde

The inspectors reviewed previous loss of power events at Palo Verde. The inspectors looked for similar occurrences for both the 525 kV main transformer bushing flashover and the partial loss of power event caused by the crane.

The inspectors noted that four previous loss of power or partial loss of power events had occurred at Palo Verde since the beginning of 1988 which involved rain storms. In particular, a flashover of the high voltage bushing on the Unit 3 Phase B main transformer on July 31, 1988 appeared quite similar to the November 14, 1991 event. The inspectors also noted that one previous partial loss of power event had occurred at Palo Verde on July 26, 1988 which involved a ventilation trunk contacting energized high voltage power lines. (These and other events are described further in Appendix E).

The AIT determined that the licensee's corrective actions on previous storm related events did not include a detailed review of the adequacy of the site lightning protection despite the fact that lightning was initially considered by the licensee to have been a contributing factor in two of these previous events. The AIT recognized that a followup licensee report discounted lightning as a cause for the July 31, 1988 event. However, the AIT determined that the licensee had taken no action to resolve the differences between the initial (August 1988) report and the followup (February 1989) report.

The AIT also found that the licensee's action on the ventilation trunk event did not consider increasing administrative controls on the use of temporary equipment near high voltage transmission lines.

The AIT concluded that the licensee's corrective action on previous storm related events had been inappropriately limited in scope.

C. Licensee Event Investigation

The AIT monitored the licensee's event investigation while it was in progress and found that it was, in general, very thorough and methodical. The licensee appeared to have expended considerable resources to ensure that all issues were fully and promptly addressed and well-documented. The licensee's investigation was being documented in Condition Report/Disposition Request (CRDR) 3-1-0208.

However, the AIT identified three errors in the licensee's determination of the sequence of events:

The licensee determined that letdown was restored at 11:18 a.m. on November 15, 1991, based on an entry in the Unit Log. The Control Room log indicates that letdown was restored at 10:28 a.m. However, based on review of printouts from the plant computer and on the strip chart of pressurizer level, the AIT determined that letdown was restored at 10:05 a.m. The licensee then agreed with this finding.

The licensee determined that instrument air compressors were restored to service at 9:27 a.m. on November 15, 1991, based on an entry in the Control Room log. Several of the entries in the Control Room log were determined by post-event review of the plant computer printouts. However, in a more careful review of the printout, the AIT determined that the first instrument air compressor was not restored to service until 9:51 a.m. The licensee agreed with this finding. The backup nitrogen system adequately supplied instrument air loads during this event.

The licensee did not identify one of the failed attempts to start Reactor Coolant Pump (RCP) 1B in its sequence of events. The AIT noted that the two events identified by the licensee addressed the apparent root causes for all three failures. The licensee agreed with this finding.

The AIT concluded that the licensee's preliminary event investigation, though not yet complete, appeared adequately comprehensive.

IX. RADIOLOGICAL AND SECURITY CONSEQUENCES OF THE EVENT

The AIT did not review radiological or security consequences of this event in detail, since none were reported or expected. The AIT concluded that there were no radiological or security consequences of this event.

Table 1

Sequence of Events

TIME	EVENT	SOURCE
11/14/91		
14:49	Reactor trip following electrical surge.	UNIT LOG
11/15/91		
09:00 est	Bushing was set in crate by crane, chokers were removed and crane hook was raised above head level.	STMT - CRANE OPER
09:09 est	Operator stopped crane engine, padlocked steering wheel, and left crane house.	STMT - CRANE OPER
09:10 est	Crane boom began to swing toward 13.8 kV lines from bus NAN-S05.	STMT - CRANE OPER
09:11	Unit oscillograph alarmed.	PLANT MONITORING SYSTEM (PMS) COMPUTER
09:11 est	Station emergency number called by unknown person, alerting site fire department of fire emergency.	STMT - FIRE CHIEF
09:12 est	Control Room notified of crane contacting 13.8 kV line. Caller stated that crane was touching NAN-S06 lines (using technical reference). The Shift Supervisor, knowing of ongoing work near NAN-S05 but none near NAN-S06, tried to clarify by asking if the east or the west lines were involved. The caller responded incorrectly by stating that it was the west lines, corresponding to NAN-S06. An unknown person who was with the caller corrected him, and the caller then told the Shift Supervisor that he meant the east lines (corresponding to NAN-S05). However, the Shift Supervisor apparently did not hear the correction.	UNIT LOG STMT - SS AND ELECT. MAINT. SUPV.
09:13:13	Reactor Operator #1 opened breaker NAN-S06C, removing one train of offsite power and deenergizing 13.8 kV buses NAN-S06, NAN-S04, and NAN-S02, and 4160 V Class 1E bus PBB-S04. Entered LCO 3.8.1.1.a for offsite power availability.	UNIT LOG PMS
09:13:13	Instrument air compressor "B" tripped due to loss of power to bus NAN-S02.	PMS

09:13:15	As designed, loads shed off of NAN-S02, automatically due to undervoltage. ESF bus PBB-S04 load shed and undervoltage was sensed, generating "B" diesel generator (PEB-G02) start signal.	PMS
09:13:16	4160 V bus NBN-S02 load shed.	PMS
09:13:21	Diesel generator "B" was running at rated speed and voltage.	SEQUENCE OF EVENTS (SOE) COMPUTER
09:13:21	Diesel generator "B" output breaker closed, clearing undervoltage condition on ESF bus PBB-S04.	SOE
09:13:30	Reactor Coolant Pumps (RCPs) 1B and 2B stopped due to loss of power.	SOE
09:14	Control Room was notified from scene by several sources nearly simultaneously (over a ten-minute period) that lines over crane were still energized. Fire was reported. Shift Supervisor directed reenergization of buses NAN-S06, NAN-S04, NAN-S02, and NBN-S02.	UNIT LOG
09:16	Reactor Operator #1 was dispatched to scene to act as Fire Team Advisor. Two Reactor Operators remained in the Control Room.	STMT - RO#1
[illegible]16	Site Fire Department arrived at scene and made preparations for fighting fire while waiting for lines to be deenergized. Personnel barriers were established.	STMT - DEPUTY FIRE CHIEF
09:17 est	Control Room was notified that no personnel were in the crane.	STMT - ELECT. MAINT. SUPVR.
09:20	Reactor Operator #2 closed breaker NAN-S06C, reenergizing buses NAN-S06, NAN-S04, and NAN-S02.	PMS
09:21	Reactor Operator #2 closed breaker NBN-S02N, reenergizing the 13.8 kV TO 4.16 kV Normal Service Transformer, and buses NBN-X02 and NBN-S02.	STMT - RO#2
09:21	Reactor Operator #2 closed 13.8 kV breakers NAN-S02E and NAN-S02F, energizing six 480 V load centers. He also unsuccessfully attempted to close breaker NAN-S02D. The most significant effect of this failure occurred after the subsequent loss of bus NAN-S05. This combination of deenergized sources activated the reverse rotation interlock which inhibited starting RCP 1B.	STMT - ASST. SS, AND RO#2
09:22	Reactor Operator #2 opened breaker NAN-S05D, removing one train of offsite power and deenergizing 13.8 kV buses NAN-S05, NAN-S03, and NAN-S01, and 4160 V Class 1E bus PBA-S03.	PMS

09:22	Power was lost to instrument air compressors "A" and "C" when bus NAN-S01 was denergized, leaving no operating air compressors.	PMS
09:22	Letdown was lost due to loss of power to the Nuclear Cooling Water flow switch for the Letdown Heat Exchanger. Pressurizer level was about 28 %. Operators secured all but one 44 gpm charging pump.	PMS
09:22:00	Loads shed off of bus NAN-S01 due to undervoltage. ESF bus PBA-S03 load shed and undervoltage was sensed, generating an "A" diesel generator (PEA-G01) start signal.	PMS
09:22:00	Forced circulation was lost when RCPs 1A and 2A stop due to loss of power.	PMS
09:22:00	4160 V bus NBN-S01 load shed.	PMS
09:22:06	Diesel generator "A" was running at rated speed and voltage.	SOE
09:22:06	Diesel generator output breaker closed, clearing undervoltage condition on ESF bus PBA-S03.	SOE
09:23 est	Fire Team Advisor arrives on scene after lines deenergized and electrical hazard removed. The Site Fire Department is already fighting the fire. Fire Team Advisor's radio cannot transmit, so he borrowed a radio from an Auxiliary Operator at the scene.	STMT - RO#1(FTA)
09:25	Instrument air header pressure low alarm received. Backup nitrogen system valve opened to supply instrument air header, and alarm clears.	PMS
09:28	Control Room was notified that the fire is out.	UNIT LOG
09:28	NUE was declared on the basis of a fire in the Protected Area greater than 10 minutes.	UNIT LOG
09:30 est	STA arrived in Control Room	STMT - STA
09:35 est	Extra SRO (Qualified Assistant SS) arrived in Control Room.	STMT - ASST. SS
09:40 est	STA verified establishment of natural circulation.	STMT - STA
09:45	Pressurizer was inoperable (TS LCO 3.4.3.1) due to level >56%. Operators elected to continue running one charging pump to provide RCP seal injection.	UNIT LOG
09:47 est	Reactor Operator #1 returned from Fire Team Advisor duties.	STMT - RO#1
09:50	Reactor Operator #3 restarted RCP 2B.	UNIT LOG
09:50	Reenergized NBN-S01 through 4160 V crosstie from NBN-S02, providing source of power to non-Class 1E loads normally supplied by NAN-S05.	CR LOG

09:51	Instrument Air Compressor B was restarted, and nitrogen backup system isolation valves closed.	SOE
10:02	NUE terminated.	UNIT LOG
10:02	Power was restored to Instrument Air Compressors A and C.	PMS
10:05	Letdown was restored after Load Center NHN-M13 (off of breaker NAN-S01G) was energized, supplying power to the non-regenerative heat exchanger nuclear cooling water flow switch.	PMS
10:40 est	Auxiliary Operator No. 2 made a emergency containment entry and verified that RCP 1B was not rotating, in response to Control Room indication of reverse rotation. Alarm later found to be due to lack of power to RCP speed probe, which would have been energized if the prerequisites for starting the RCP had been completed.	STMT - AO #2
10:50	Attempted to start RCP 1B. The RCP did not start because the lift oil flow interlock was not satisfied, but this was not recognized as the cause at the time.	STMT - RO#3
10:57	Forced circulation was lost when RCP 2B was inadvertently tripped by Auxiliary Operator #1.	UNIT LOG STMT - AO#1 PMS
11:05	Restarted RCP 2B after completing required seven minute run of lift oil pump, restoring forced circulation.	PMS
11:05	Attempted restart of RCP 1B with no response. Shift Supervisor advised Reactor Operator #3 of technique to temporarily defeat lift oil flow interlock.	STMT - RO#3
11:06	Started RCP 1B after defeating lift oil flow interlock. RCP 1B tripped after 14 seconds due to speed probe being unpowered.	PMS
11:18	Pressurizer restored to operable condition after level was returned to <56%. LCO 3.4.3.1 exited.	UNIT LOG
11:40	Restored offsite power to ESF bus PBB-S04.	CR LOG
13:15	Shutdown DG B after carbon burnout and cooldown.	UNIT LOG
13:39	Reactor Operator # 2 closed breaker NAN-SO2H, and attempted to close breaker NAN-SO2G. The most significant effect of the failure of NAN-SO2G to close was that power was unavailable to the motor operator for the discharge valve of Circulating Water Pump D, which was not closed. This delayed starting of this pump and restoration of the main condensors.	PMS, STMT - OPS MGR AND RO #2

14:36	Started RCP 1B after restoring power to Load Center NHN-M06 (off of NAN-S02D), repowering the RCP speed probe.	UNIT LOG
15:10	Power was restored to Circulating Water Pump D discharge valve after minor repairs to breaker NAN-S02G were completed and the breaker was closed.	PMS, UNIT LOG
11/17/91		
09:00	NAN-S05 and NAN-S03 were reenergized after completion of inspection and maintenance of damaged power lines.	CR LOG
09:04	NAN-S03 was tied to NAN-S01, and then backfeed from NBN-S01 was secured.	CR LOG
09:08	Energized NBN-X03.	CR LOG
09:16	Restored offsite power to ESF bus PBA-S03.	CR LOG
10:29	Shutdown DG "A" after carbon burnout and cooldown, restoring electrical distribution lineup to normal for plant conditions.	CR LOG

Note: The times from the Sequence of Events Computer were adjusted by the time difference between the clocks of the SOE computer and Plant Monitoring System computer, a difference of approximately 20 seconds.

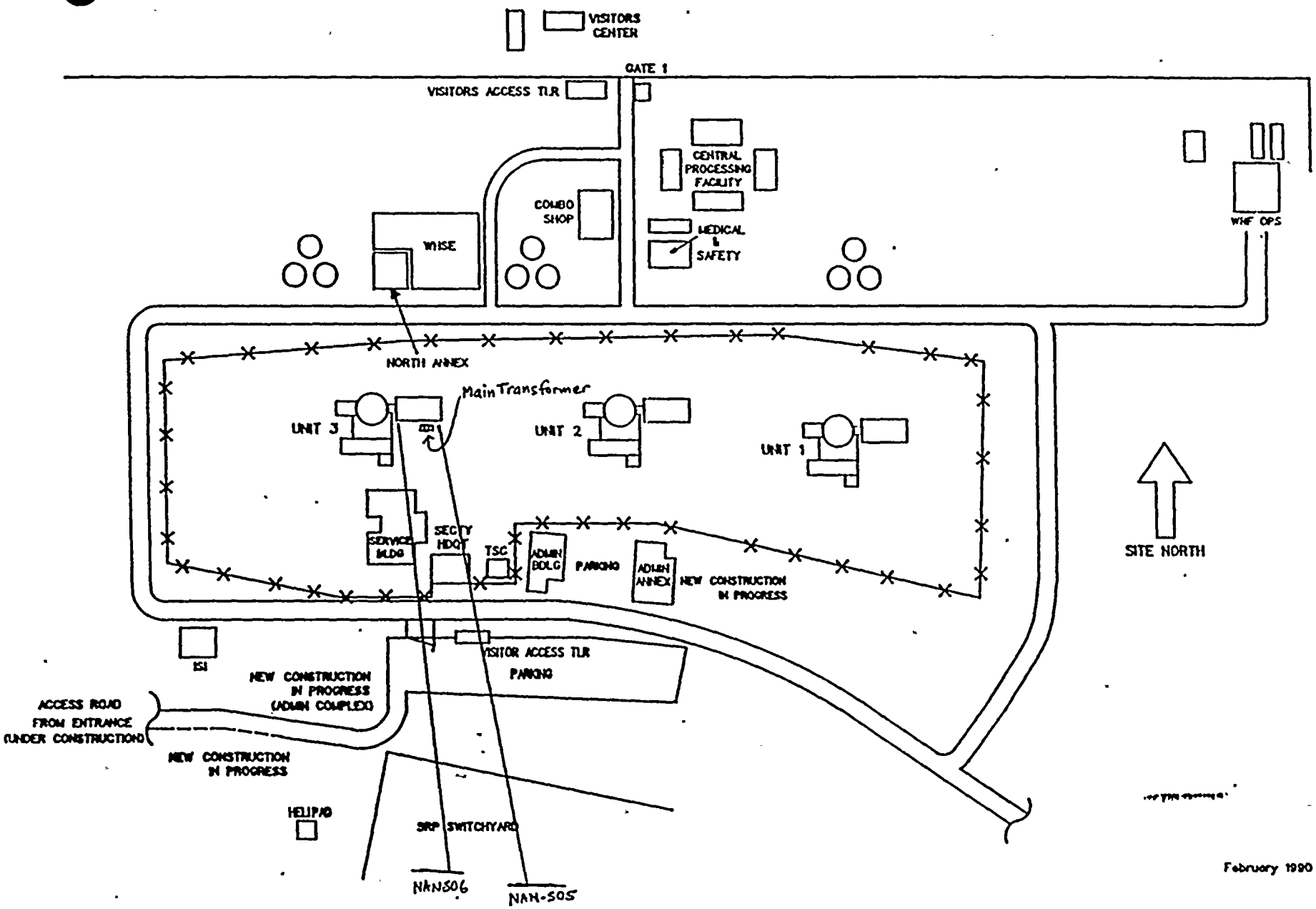

FIGURE 1

PLAN VIEW OF PALO VERDE NUCLEAR GENERATING STATION

FIGURE 2

SIMPLIFIED ELECTRICAL SYSTEM SCHEMATIC

PALO VERDE UNIT 3

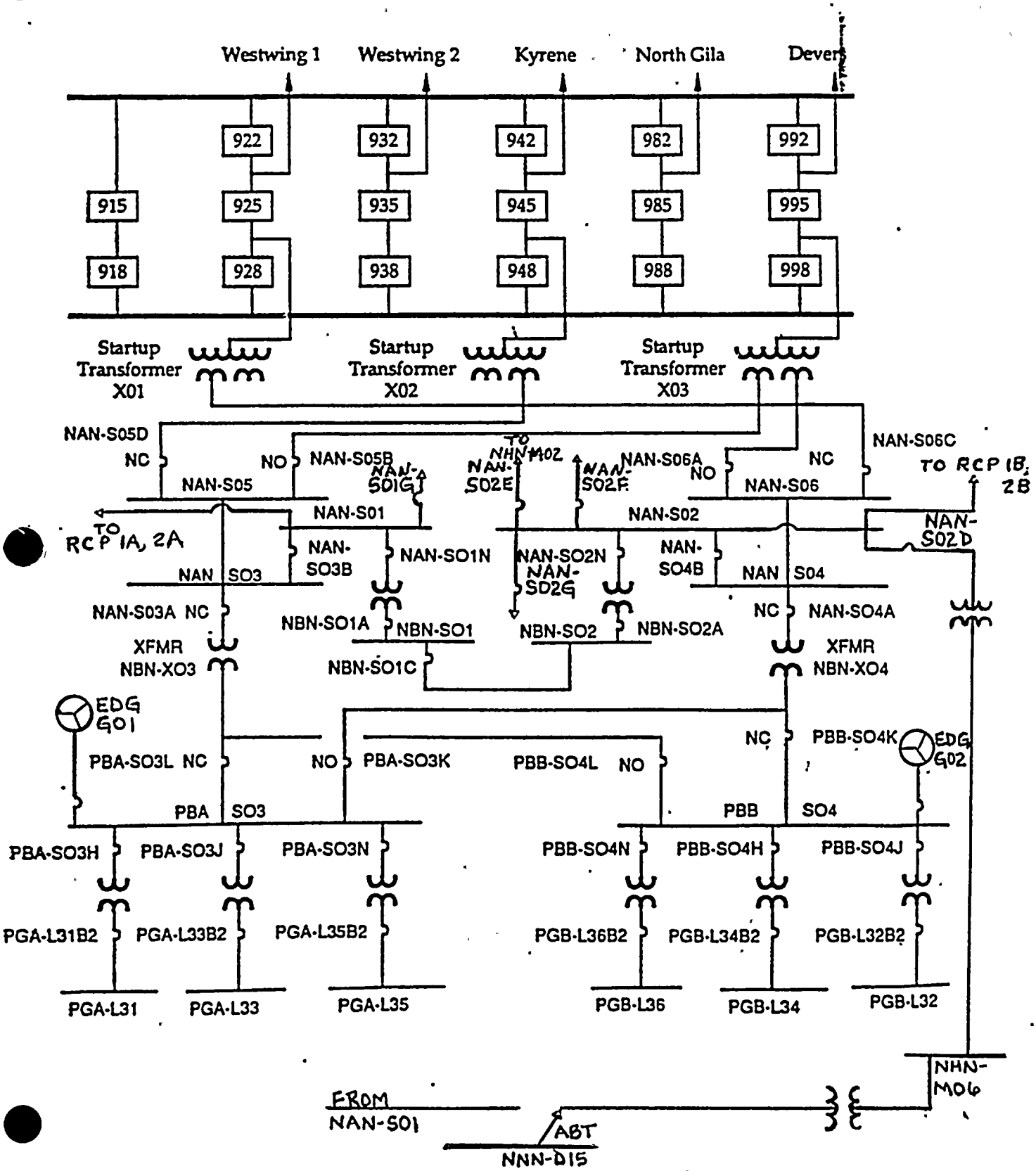

FIGURE 3

GROVE MODEL RT 65S CRANE

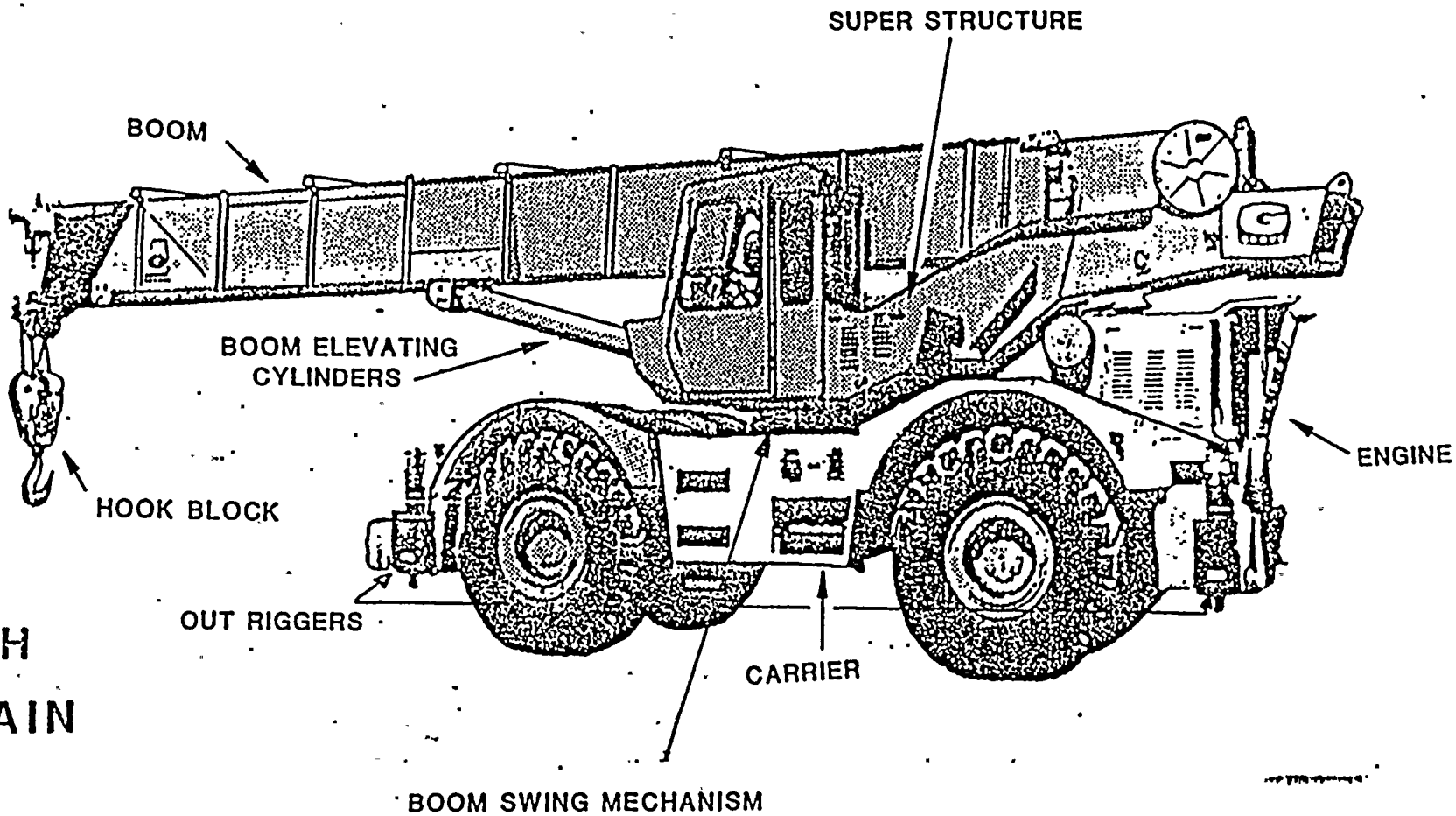

ROUGH TERRAIN

6
5 >MODEL NUMBER

SWING CAB

APPENDIX A

AUGMENTED INSPECTION TEAM CHARTER
PALO VERDE UNIT 3 LOSS OF 13.8 KV POWER
ON NOVEMBER 15, 1991

The Augmented Inspection Team (AIT) is to perform an inspection to accomplish the following:

1. Develop a complete description of the event, develop a detailed sequence of events that occurred during the loss of power event, and identify all equipment failures and human errors that occurred during the event and during event recovery.

2. Determine the specific circumstances and events which led up to the shorting of the Unit 3 power source and attendant loss of 13.8 KV power for Palo Verde Unit 3 on November 15, 1991. Interview licensee and contractor personnel as appropriate.

3. Verify and evaluate the licensee's immediate actions following this event, including ability to restore power in a timely manner. Operations and management effectiveness are to be evaluated.

4. Evaluate the effectiveness of licensee management in corrective actions subsequent to the event.

5. Identify and evaluate the procedures used by the licensee which address outage type work, including vehicle and crane access and operation, near major external electrical supplies. Determine the effectiveness of, and adherence to, these procedures for the current event. Determine whether the procedures are "conditioned" to consider equipment out of service which amplifies the need to protect remaining equipment.

6. Identify and evaluate the circumstances surrounding communications to and within the control room which resulted in tripping the wrong breaker and why the crane boom failed to lock and was subsequently moved by the wind. Evaluate crew training and briefings for work in the switchyard.

7. From a safety perspective, ascertain the similarities and differences of this event to the Vogtle and Diablo Canyon Unit 1 event. Determine the licensee's actions and follow-up of similar industry events, and specifically the Vogtle event (IN 90-25/w Suppl. 1 and NUREG 1410-Section 10) and the Diablo Canyon Unit 1 event (NRC Inspection Report No. 50-275/91-09). Evaluate the effectiveness and comprehensiveness of these actions.

8. Evaluate other recent (last 3 years) instances of loss of off-site power (LOP) events to determine Palo Verde's susceptibility to LOP events, and effectiveness of corrective actions previously taken.

9. Provide a Preliminary Notification upon initiation of the inspection and an update at the conclusion of the inspection.

10. Determine the cause of the Unit 3 main transformer failure which resulted in a Unit 3 trip on November 14, 1991.

11. Evaluate the licensee's maintenance practice on electrical insulators and bushings. Assess the adequacy of the licensee's actions with results, such as trending, etc.

12. Assess the adequacy of the licensee's lightening protection and mitigation devices, including conformance with codes, test programs, and maintenance practice.

13. Prepare a special inspection report documenting the results of the above activities within 30 days of the start of the inspection.

APPENDIX B

Details of Licensee Crane Testing, Maintenance, and Swing Brake Inspection

The licensee configured the crane as it was found immediately prior to the event. The crane was set up with only the front outriggers extended, with the crane 1.5 degrees lower in the rear than in the front, and level right to left. However, for safety reasons, the licensee positioned the crane in a quarantine area located adjacent to the station auto repair facility.

The wind at the time was light and variable, with occasionally stronger breezes. The wind direction varied from approximately perpendicular to the boom to quartering off of it. The wind measured at the meteorological tower for the site at the 30 foot elevation at this time was measured as varying from 5 to 14 miles per hour. This wind was similar to that recorded on November 15, 1991 at the time of the event, according to personnel present at the event.

The licensee calculated the wind force at the time of the event, assuming a 12.5 mile per hour wind acting perpendicular to the boom. The peak measured wind at the site meteorological tower at the time of the event was 12.5 miles per hour. This wind resulted in a calculated wind force of 110 pounds applied 36 feet from the hinge point of the boom.

The testing first found that the wind at the quarantine site alone was sufficient to quickly rotate the crane boom. The testing then found that the hand brake alone was sufficient to stop the boom against the combined force of the actual wind during the test and the calculated force of the estimated wind at the time of the event. This combined force simulated a wind somewhat greater than the estimated wind at the time of the event. Finally the testing found that the hand brake would prevent boom rotation even with full hydraulic control input to the boom in either direction of boom swing.

The AIT reviewed the records of maintenance for this crane (serial number 42117P). The AIT found that the crane had received a comprehensive inspection by Diversified Inspections, Inc. on December 28, 1990, and had received three preventive maintenance checks since then. The most recent of these was on October 3, 1991. No significant mechanical discrepancies related to the swing brake system were identified. The AIT concluded that the crane had received regular preventive and corrective maintenance.

After the testing, the hand brake was disassembled and inspected. The brake was checked for loose components, worn parts, adequate clearances, free play, cable abnormalities, and brake pad condition. The licensee found no discrepancies.

The AIT observed all of the testing, reviewed the calculation of wind force, and reviewed the brake inspection documentation. The AIT concluded that the testing and inspection provided reasonable assurance that the hand brake had not been set by the crane operator before he left the crane cab.

APPENDIX C

Inspection of Phase A Main Transformer

1. Visual inspection

The licensee and the inspectors inspected the Phase A main transformer prior to any major corrective actions by the licensee. The inspectors observed that the porcelain on the high voltage bushing was clean. The bushing was an oil filled type provided by Westinghouse and was rated at 500 kV with a Basic Impulse Level (BIL) of 1550 kV. The capacitances of the transformer bushings were C1 = 506 micro micro farads (MMF) and C2 = 1483 MMF. There were more than 10 burn marks on the expansion cap on the top of the bushing, including two holes. Residue from oil leakage was observed below one of the holes. There was no evidence that the internal bushing conductor was penetrated or otherwise damaged. There was a large burn mark on the top of the transformer upper oil reservoir. There were small burn marks on top of the transformer. The metal jacket on the cable to the voltage tap receptacle located just above the bushing mounting flange was damaged.

2. Licensee Evaluation of the Cause of the Event

The licensee performed Doble testing of the damaged bushing. A brief description of Doble testing is contained in Appendix I. The test results indicated the insulating properties of the bushing were still satisfactory. Based on the results of this test, the physical evidence that the porcelain was clean and undamaged and eyewitness accounts the licensee concluded that flashover of the bushing occurred. The term "flashover" is used in this report to describe an external electrical arc between a component at one voltage potential and another component at a different voltage potential.

The licensee concluded that two potential conditions could have caused the flashover; 1) lightning, or 2) inadequate clearance between the 525 kV line at the top of the bushing and the transformer upper oil reservoir. The licensee ruled out failure of the bushing due to contamination, because the investigation showed no appreciable amount of contamination on the bushing. The licensee considered lightning to be the most probable cause. Lightning protection is discussed in Appendix D of this report.

3. Corrective Actions and Results

The licensee replaced the bushing. The licensee Doble tested the lightning arrester. Although the Doble test of the lightning arrester indicated satisfactory insulation properties, the licensee replaced the lightning arrester. The licensee stated that the lightning arrester was replaced to ensure that it would not contribute to further damage since Doble tests might not detect all lightning arrester problems. The licensee Doble tested the high voltage potential transformer. The results indicated that the potential transformer was undamaged.

The licensee performed a total gas in oil test for main transformer phase A after the bushing failure and compared the test results to previous results. The carbon dioxide content had increased from 2744 to 5117 parts per million (ppm) while the oxygen content had decreased from 5626 to 3144 ppm. The contents of nitrogen, methane, and carbon monoxide had increased from 60751, 64 and 325 ppm to 62290, 114 and 415 ppm respectively. Some of these values were outside the normal limits specified by the licensee. The licensee stated that all values were within industry standards. The licensee evaluated the data and considered the oil indicated the transformer was satisfactory.

In addition the licensee performed a visual inspection of the main generator surge arrester and capacitor cubicles. The licensee inspected the generator high voltage bushings. No problems associated with the event were noted. The licensee also contacted the generator vendor and discussed the event. The licensee concluded that no damage would have occurred to the main generator. The generator vendor concurred.

In order to ensure that adequate clearance existed between the bushing and the oil reservoir the licensee stated that they will evaluate the minimum required separation distance.

The licensee stated that they will send the removed bushing to the Electric Power Research Institute and the removed lightning arrester to the vendor for special testing to help determine the final root cause of this event.

4. Review of Licensee Actions

The inspectors reviewed the physical evidence and the licensee's evaluation of the event. In addition the inspectors reviewed the licensee's predictive and preventative maintenance program to insure that maintenance omissions or errors were not a contributing factor in this event.

Since failure of the phase B main transformer bushing on July 31, 1988, the licensee had established a preventative maintenance program to do Doble testing, transformer turns ratio testing, meggering, oil testing and cleaning of the transformer bushings with demineralized water during every refueling outage. Oil testing was also being performed every six months.

The inspectors reviewed the trend of capacitance measurements for the main transformer bushings and found that the capacitance had deteriorated by about 2 percent. This was within the generally recognized industry criteria.

The inspectors noted that the licensee did not have a formal program for engineering review and trending of maintenance data. The inspectors observed, however, that main transformer maintenance data was routed to both site and corporate engineering organizations for review. Site

engineering placed a cover sheet on maintenance data with a review signature space. The inspectors selected a sample of transformer oil data and determined that each sample had a signed engineering review sheet attached. The licensee also informed the inspectors that all Doble test data was sent to the factory for review.

The inspectors noted that the licensee was finalizing a formal thermography program for transformers, including the main transformers. The licensee had already been performing some thermography of transformers. In February, 1991, the licensee had identified a hot connection on the high voltage bushing for the Unit 3 phase A main transformer. The licensee tightened the connection on February 23, 1991. Thermography also identified a hot connection on a overload relay in Unit 2 phase A main transformer. This connection was tightened on October 3, 1991.

The inspectors observed the condition of insulation materials on the main transformers for Units 1 and 2. The insulating material appeared clean.

5. Conclusions

The AIT concluded that the licensee's insulation maintenance practices were adequate and did not appear to contribute to the flashover, based on a review of the licensee's maintenance program and maintenance data, the observed conditions at main transformer A, and the observed cleanliness of insulating material at the other units.

The AIT concluded that these actions were adequate to ensure that the transformer and main generator would be satisfactory for continued operation, based on review of the testing and repair actions accomplished or planned prior to finishing the repairs.

APPENDIX D

Lightning Protection System Performance

1. Background and Observations

On November 14, 1991, Palo Verde Unit 3 was in Mode 1 at 100% power. A reactor trip occurred after a turbine trip due to flashover on the Phase A main transformer high voltage bushing caused by lightning. There were no engineered safety features actuations. None were expected for this transient. The fast transfer scheme operated as designed, and transferred the 13.8 kV non-Class 1E buses NAN-S01 and NAN-S02 from the unit auxiliary transformer (UAT) to the startup transformers. The unit was stabilized in Mode 3 (Hot Standby).

The inspectors requested information on the codes and standards Palo Verde was committed to with regard to lightning protection. The licensee responded that the Final Safety Analysis Report (FSAR), Chapter 9A, Response to Question 9A.66 stated that the unit lightning protection was in accordance with the Underwriter's Laboratory (UL) Master Labeled Lightning Protection Plan. The licensee stated that this plan was contained in UL Standard 96A, "Standard for Safety, Installation Requirements for Lightning Protection Systems," for buildings. The licensee stated that Palo Verde was not committed to any specific codes or standards for lightning protection of onsite transmission lines and transformers.

The lightning protection for the main transformer was provided by the lightning arrester, overhead static lines and lightning air terminals for protection of the power block buildings. The lightning arresters, Type EHV, were supplied with the transformer by Westinghouse. The lightning arrester was located about 35 feet away from the main transformer bushing. The interconnection cable between the main transformer and the lightning arrester was a No. 4/0 (Thompson Catalog No. 507) copper cable. The No. 4/0 cables were terminated at 3/4 inch copperweld ground rods, 20 feet long. The licensee stated that the grounding system had been designed in accordance with IEEE 80, "Guide for Safety in AC Substation Grounding," and IEEE 142, "Recommended Practice for Grounding of Industrial and Commercial Power Systems."

The inspectors reviewed the plan for lightning protection of high voltage transformer A. The actual installation appeared to match Plan 13-E-ZYP-045, Revision 10, "Main Transformer Plan and Elevations."

2. Licensee Evaluation of Lightning Protection and Corrective Actions

The licensee's initial calculations show the shield angles of the static lines above the main transmission lines were between 32 degrees and 42 degrees. (Shield angle refers to the angle between vertical and a line drawn from the static wire to the main transmission lines.) The static wire creates an umbrella shaped zone of lightning protection for the transmission lines. The existing shield angles were greater than the

licensee's target 20 degree shield angle. Even though the shield angles were outside of the target angle the licensee considered a direct strike on the 525 kV phase A conductor to be unlikely. The licensee agreed that further evaluation of the consequences of the existing shield angles would be included in their lightning protection system reevaluation.

The licensee considered inadequate grounding to be very improbable as a cause for the event, due to past experiences and the previously measured ground mat resistance of approximately 0.2 ohms.

The licensee also considered it possible that a direct lightning strike in the immediate vicinity of the transformer bushing might have occurred, rather than a lightning strike on one of the transmission lines which travelled to the bushing.

The licensee contracted Mr. John G. Anderson, co-author of Section 27, "Lightning and Surge Protection," of the Standard Handbook for Electrical Engineers, Eleventh Edition, to perform a detailed analysis of the existing main transformer and onsite power line lightning protection. Mr. Anderson also reviewed the event and informed the inspectors that his preliminary review of the site lightning protection and the damage suggested that the flashover was the result of lightning. The licensee agreed to provide Region V with a copy of Mr. Anderson's report.

Based on discussions with Mr. Anderson, the licensee concluded that the length of the lightning arrester loop might have been excessive. The arrester loop is the length of wire from the top of the transformer bushing to the arrester plus the length of the return ground wire. For the fast rising high potential voltages caused by lightning, the arrester loop wire appears as an impedance in series with the lightning arrester, and reduces the effectiveness of the arrester to minimize the peak voltage at the transformer. The licensee stated that the length of the lightning arrester loop will be evaluated by Mr. Anderson.

At the end of the inspection, the licensee was considering other actions to be taken in conjunction with the results of Mr. Anderson's report. These actions included:

Evaluate the pole grounding system to determine if additional grounding rods are needed.

Evaluate the use of the strike counter to be tied into the Digital Fault Recorder to monitor strikes to the lightning arresters.

Perform a calculational analysis of the existing configuration for lightning protection of the transformer.

Evaluate adding line entrance arresters.

Evaluate adding a coincident lightning event detection system.

Evaluate replacement of existing lightning arresters with new style metal oxide arresters.

Send the affected lightning arrester to the vendor for testing.

Research the meteorological data to determine whether any lightning strikes in the Palo Verde area occurred at the precise time of the event.

3. Conclusion

Based on the contractor's review of the lightning protection associated with the main transformers and onsite power lines, the AIT concluded that the licensee's initial actions to evaluate the adequacy of the lightning protection installation were adequate. The AIT recommended that a final determination and review of the system's adequacy should be performed after the licensee had completed its review.

APPENDIX E

History of Offsite Power Interruptions at Palo Verde Unit 3

1. Review of Previous Events Involving Storms and Offsite Power

a. On January 16, 1988, startup transformer AE-NAN-X03 shed one Engineered Safety Features (ESF) bus in both Unit 1 and Unit 2 due to a 13.8 kV faulted bus in Unit 1. The bus faulted to ground. The bus was located outside the turbine building enclosed in a protective metal structure. The licensee found openings in the protective metal structure which would allow entry of dirt and moisture. It was raining that day. The licensee concluded that the cause of the fault was moisture and dirt contamination between the 13.8 kV bus and the grounded enclosure.

The licensee's corrective action for the January 16, 1988, event was to inspect and clean other outside buses and enclosures and to repair as necessary any openings in the enclosures.

b. On July 31, 1988, a flashover occurred on Unit 3 525 kV bushing for main transformer B during a rain and lightning storm. No ESF buses were lost. The high voltage bushing had numerous burn marks on the expansion cap on the top of the bushing. The oil filled cap had been penetrated in 6 places and most of the oil lost. There were burn marks on various grounded equipment on the top of the transformer and oil reservoir. The licensee concluded that the cause of the flashover was a lightning strike. This event appeared similar to the event of November 14, 1991.

The licensee's corrective action for the July 31, 1988, event included cleaning of main transformer insulators, testing of the lightning arrester and development of a preventive maintenance program to routinely clean the insulators.

c. On January 3, 1989, bushings on both Unit 2 ESF transformers failed during a rain and lightning storm. Offsite power to both ESF buses was lost. One bushing on each transformer was damaged. Contamination was noted on the porcelain part of each bushing. The licensee concluded that the cause of the fault was contamination on the bushings deposited by mist from the cooling towers and a raised ground potential due to lightning strikes in the area.

The licensee's corrective action for the January 3, 1989, event included cleaning the insulators for all ESF transformers, adding a drip loop to lower the possibility of water carried contamination, development of a preventive maintenance program to wash all insulators which could be exposed to cooling tower mist and the addition of creepage extenders on the bushings. The licensee noted that creepage extenders would increase the voltage potential that could exist across the bushings without causing flashover between the top of the bushing and grounded surfaces.

On February 22, 1989, the corporate engineering department issued a "Reexamination of Bushing Flashover," for the July 31, 1988 event, based on the January 3, 1989 event. The reexamination included an overview of the lightning protection system, and included the recognition that the lightning arrestors were potentially too far from the transformers. However, this reexamination concluded that lightning had not been involved in the July 31, 1988 event, and that, therefore, additional studies of the lightning protection system were unnecessary. The reexamination concluded that the cause of the July 31, 1988 event had been drift contamination from site cooling towers.

The AIT found that the discrepancy between the August 1988 and February 1989 evaluations with respect to whether or not the transformer bushing was contaminated had not been identified or resolved by the licensee. The AIT also found that the licensee did not appear to have resolved the difference between the initial evaluation and the reexaminations conclusions regarding the role of lightning in the July 31, 1988 event.

d. On August 24, 1991, offsite power to 1 Unit 3 ESF bus was lost due to a breaker trip during a wind and rain storm. The licensee determined that the breaker trip circuit had short circuited. Moisture was found in the trip circuit in the plant multiplexer cabinet. The licensee found a degraded seal to the cabinet. The licensee concluded that the cause was moisture driven by the storm entering the plant multiplexer cabinet.

The licensee's corrective action for the August 24, 1991, event was to repair the degraded seal to the multiplexer cabinet.

2. <u>Review of Previous Events Involving Temporary Equipment Contacting Power Lines</u>

On July 26, 1988 offsite power to 1 Unit 2 ESF bus was lost when a temporary ventilation trunk was blown off the turbine building onto 13.8 kV leads. The licensee concluded that the cause was inadequate procedural controls for temporary equipment.

The licensee's corrective action for the July 26, 1988 event was described in the licensee event report rather broadly: "to review programmatic procedures." The licensee stated that the programmatic review was limited to the procedures directly associated with temporary plant modifications. These procedures were modified to include additional controls. No review was done of procedures involving the use of temporary equipment around the switchyards which was not being installed as a temporary plant modification.

APPENDIX F

Control of Special Variances (Deviations from Procedures)

Procedure No. 40AC-90P02, Revision 1, PCN 13, dated June 12, 1991, "Conduct of Shift Operations," stated that all plant activities were to be directed by approved written procedures and shall be followed as written.

Section 3.3.2.2 of Procedure No. 40AC-90P02 defined Special Variances. Section 3.3.2.2 stated that a Special Variance was a means for on-shift operations personnel to document, review, approve and use non-intent changes to procedures due to unique one-time plant conditions. Section 3.3.2.2 defined examples of procedure changes which would be appropriate using a Special Variance and examples of procedure changes which would not be appropriate using a Special Variance. Listed as an appropriate Special Variance was providing instructions for activities not specifically covered by procedures but required by existing plant conditions as determined by the Shift Supervisor.

Procedure No. 40AC-90P02 required that a Special Variance be; 1) reviewed and initially approved by two members of the Operations Supervisory Staff, at least one of whom was a Shift Supervisor or Assistant Shift Supervisor, and 2) approved by the Unit Operations Manager within 14 days. Appendix G of Procedure No. 40AC-90P02 provided a method of documenting and retaining records of Special Variances.

APPENDIX G

History of Recent Reactor Coolant Pump (RCP) Seal Injection Events

Seal injection had to be isolated on May 24, 1991, while all four RCPs were running and the plant was operating at power, after the licensee inadvertently began maintenance on the only available seal injection filter.

Nuclear Cooling Water flow to the seals was lost during a June 19, 1991, inadvertent containment spray event, requiring prompt attention to the seals.

In July 1991, again with all four RCPs running and the plant operating at power, the licensee isolated seal injection to remove and blank flange the pressure relief valve associated with the RCP seal injection heat exchanger.

Also, in October 1991, the licensee identified minor but progressive degradation of the RCP 1B middle seal.

APPENDIX H

Performance and Effectiveness of the Fire Team Advisor

The Site Fire Department responded to this event several minutes before a fire actually broke out, based on the potential for a fire in what was classified as a "fire emergency." However, the Fire Team Advisor (FTA) was not released from his Reactor Operator duties to respond until approximately two minutes after the fire was reported, or about five minutes after the Control Room was notified that a crane was in contact with energized high voltage power lines.

As a result of this delay, the FTA did not arrive at the scene of the fire until after the high voltage lines were deenergized and the Fire Department was actively involved in fighting the fire. Consequently, the FTA was not available to advise the Fire Department of the potential effects on equipment, though no safety-related equipment was in the immediate area of the small fire. Also, the FTA was not present in time to clarify some of the confusing communications which occurred during the first few minutes of the event. The fire was out about five minutes after the FTA arrived at the scene.

The FTA's radio did not function properly after he arrived at the scene, further hampering his effectiveness. However, other operations and supervisory personnel at the scene were providing advise and communicating on other radios until the FTA obtained another radio. He traded radios with an Auxiliary Operator who was at the scene. The AIT determined that the licensee had failed to ensure that the radio in the locker for use by the Fire Team Advisor was functional, and that the Fire Team Advisor had failed to check the functionality of the radio before he went to the scene. However, the AIT concluded that the faulty radio had not significantly influenced the event.

Procedure 14AC-OFP02, "Emergency Notification and Response," required that after a report of a fire is received and the existence of the fire is verified, the FTA is to respond to the fire area with full protective equipment and await the arrival of the fire team. Appendix B of this procedure states that the FTA is to advise the Fire Captain of the status of affected and associated equipment, and to keep the Shift Supervisor advised of fire suppression activities. Even though it was only a few minutes after the Site Fire Department response, the late arrival of the FTA on the scene resulted in the FTA not being present to perform these particular duties.

APPENDIX I

Doble Testing

Doble testing is accomplished for the routine evaluation of the various types of electrical power apparatus insulation by the ac dielectric loss and power factor method.

The test set measures the current, capacitance and dielectric loss of apparatus insulation at any test voltage between 2 kV and 12 kV at the design input frequency. From these basic test data, power factor and equivalent ac resistance can be computed.

The basic principle of this non-destructive testing is the detection of some measurable change in the characteristics of an insulation which can be associated with the effect of such destructive agents as water, heat and corona. In general, an appreciable increase in the ac dielectric loss, leakage current, or power factor of the insulator is an indication of deterioration.

The interpretation of test results involves the use of standards based upon correlated test data for normal and abnormal power-apparatus insulation of various types. As power factor is the ratio of charging current to dielectric loss, and consequently is independent of the amount of insulation under test, it is the most commonly used criterion for judging the condition of insulation. The power factor standards and other criteria used have been developed based on years of study and field experience.

Doble test equipment can be used to test the insulating properties of bushings, potheads, insulators, circuit breakers, lightning arresters, oils, transformers and cables.

APPENDIX J

Principal Persons Contacted

Name	Title or Department
+*Richard Rouse	Supervisor, Compliance
*Kent Hamlin	Director, Nuclear Safety
+*Stephen Guthrie	Director, Quality
+*James M. Levine	Vice President, Nuclear Production
+*Bob Adney	Plant Manager, Unit 3
*David Mauldin	Director, Site Maintenance and Methods
*Greg Storey	Supervisor, Safety and Health
+*Ronald J. Stevens	Director, Nuclear Licensing and Compliance
+*Robert M. Kerwin	Manager, Maintenance Support
+*Thomas R. Bradish	Manager, Compliance
+*Jack N. Bailey	Vice President, Nuclear Safety and Licensing
*E. C. Simpson	Vice President, Nuclear Engineering
+*G. N. Overbeck	Director, Site Technical Support
+ Bill Ecker	Electrician
+ Bruce Rash	Shift Technical Assistant, Unit 3
+ Jeff Summy	Manager, System Engineering
+ Doug Withers	Supervisor, System Engineering Electrical
+ Jack A. Bailey	Director, Nuclear Engineering, APS
+ William F. Conway	Executive Vice President
+ Lee Clyde	Operations Manager, Unit 3
+ Stephen W. Ryan	Shift Supervisor, Unit 3
+ Bill Garrett	Assistant Shift Supervisor, Unit 3
+ Mike Salazar	Supervisor, Electrical Maintenance, Unit 3
+ Ronald K. Flood	Plant Manager, Unit 2
+ Dan Smyers	Supervisor, System Engineering Electrical
+ Alan Johnson	Supervisor, Compliance
+ Gary T. Shanker	Manager, Significant Operating Events Department
+ Robert D. Zering	Manager, Station Services
+ Dan Blackson	Manager, Maintenance and Test Equipment
+ Paul Caudill	Director, Site Services

*Attended exit meeting on November 20, 1991.
+Attended entrance meeting on November 16, 1991.