ACCELERATED DISTRIBUTION DEMONSTRATION SYSTEM

REGULATORY INFORMATION DISTRIBUTION SYSTEM (RIDS)

ACCESSION NBR:9012280316 DOC.DATE: 90/12/21 NOTARIZED: NO DOCKET #
FACIL:STN-50-528 Palo Verde Nuclear Station, Unit 1, Arizona Publi 05000528
STN-50-529 Palo Verde Nuclear Station, Unit 2, Arizona Publi 05000529
STN-50-530 Palo Verde Nuclear Station, Unit 3, Arizona Publi 05000530
AUTH.NAME AUTHOR AFFILIATION
CONWAY,W.F. Arizona Public Service Co. (formerly Arizona Nuclear Power
RECIP.NAME RECIPIENT AFFILIATION
Document Control Branch (Document Control Desk)

SUBJECT: Forwards clarifications to NRC ATWS safety evaluation,per 900731 ltr re diverse auxiliary feedwater actuation sys - conceptual design & implementation schedule for 10CFR50.62 ATWS rule.

DISTRIBUTION CODE: A055D COPIES RECEIVED:LTR 1 ENCL 1 SIZE: 6
TITLE: OR/Licensing Submittal: Salem ATWS Events GL-83-28

NOTES:STANDARDIZED PLANT 05000528
Standardized plant. 05000529
Standardized plant. 05000530

	RECIPIENT ID CODE/NAME	COPIES LTTR	COPIES ENCL	RECIPIENT ID CODE/NAME	COPIES LTTR	COPIES ENCL
	PD5 LA	1	0	PD5 PD	1	1
	TRAMMELL,C	2	2	TRAMMELL,C.	2	2
INTERNAL:	ACRS	6	6	NRR/DEST/ESB 8D	1	1
	NRR/DLPQ/LPEB10	1	0	NRR/DOEA/OGCB11	1	0
	NRR/DST/SICB 7E	1	1	NRR/DST/SPLB 8D	1	0
	OC/LFMB	1	0	OGC/HDS1	1	0
	REG FILE 01	1	1	RES/DSIR/EIB	1	1
EXTERNAL:	NRC PDR	1	1	NSIC	1	1
NOTES:		1	1			

R I D S / A D D S

NOTE TO ALL "RIDS" RECIPIENTS:

PLEASE HELP US TO REDUCE WASTE! CONTACT THE DOCUMENT CONTROL DESK, ROOM P1-37 (EXT. 20079) TO ELIMINATE YOUR NAME FROM DISTRIBUTION LISTS FOR DOCUMENTS YOU DON'T NEED!

TOTAL NUMBER OF COPIES REQUIRED: LTTR 24 ENCL 18

MA 4

Arizona Public Service Company
P.O. BOX 53999 • PHOENIX, ARIZONA 85072-3999

WILLIAM F. CONWAY
EXECUTIVE VICE PRESIDENT
NUCLEAR

161-03667-WFC/MEP/KLMC

December 21, 1990

Docket Nos. STN 50-528/529/530

Document Control Desk
U. S. Nuclear Regulatory Commission
Mail Station P1-37
Washington, D. C. 20555

References: 1) Letter from U. S. NRC to W. F. Conway, APS, dated October 18, 1990. Subject: Compliance with the Anticipated Transients Without Scram (ATWS) Rule - Palo Verde Nuclear Generating Station (PVNGS) Unit Nos. 1, 2 and 3.

2) Letter to U. S. NRC from W. F. Conway, APS, dated July 31, 1990. Subject: PVNGS Diverse Auxiliary Feedwater Actuation System - Conceptual Design and Implementation Schedule for ATWS Rule, 10 CFR 50.62 (161-03369).

Dear Sirs:

Subject: Palo Verde Nuclear Generating Station (PVNGS)
Units 1, 2 and 3
PVNGS Response to NRC ATWS Safety Evaluation
File: 90-056-026

Reference 1 provided Arizona Public Service Company (APS) with the Safety Evaluation for the Anticipated Transients Without Scram (ATWS) modifications necessary to meet the requirements of 10 CFR 50.62 (ATWS Rule). The results of the staff's review concluded that the proposed designs, for the Diverse Scram System (DSS), Diverse Turbine Trip (DTT) and Diverse Auxiliary Feedwater Actuation System (DAFAS), conform to the requirements of 10 CFR 50.62, and are therefore acceptable. However, the staff's conclusion is subject to a post-implementation inspection.

Also included in Reference 1 is a discussion concerning the implementation schedule for the Unit 3 DAFAS, which is currently scheduled to be implemented prior to restart from the third refueling outage. The discussion stated that it is the staff's understanding that the modification required for DAFAS can be performed during a short term plant shutdown period and that APS should make a best effort to implement the Unit 3 DAFAS as soon as possible. The scope of the

DAFAS modification is complex and is currently scheduled for a 70 day construction and testing duration. This implementation schedule is typically associated with planned refueling outages. Therefore, the current schedule for the Unit 3 DAFAS implementation remains as prior to restart from the third refueling outage.

APS has reviewed the staff's Safety Evaluation, as provided in Reference 1, and has a number of clarifications. The attachment to this letter provides the details of these clarifications. The clarifications include the significant changes to the DAFAS design from the conceptual design, as previously provided in Reference 2. Figures 1 and 2 provide the DAFAS updated system diagram and hardware configuration, respectively.

If you have any questions concerning this matter, contact Mr. M. E. Powell at (602) 340-4295.

Sincerely,

WFCmwd

WFC/MEP/KLMC

Attachment
Figures

cc: J. B. Martin
D. H. Coe
A. C. Gehr
A. H. Gutterman

ATTACHMENT

APS CLARIFICATIONS

TO

NRC ATWS SAFETY EVALUATION

Safety Evaluation, Pg.9, Fourth Bullet:

"DAFAS will be blocked by the Main Steam Isolation System (MSIS) and by the AFAS to prevent control and safety competing actions when AFW flow to a ruptured steam generator is terminated."

APS Clarification:

The purpose of the DAFAS block when an Auxiliary Feedwater Actuation Signal is present is to prevent the ATWS AOO system from interfering with the "smart" AFAS DBE rupture identification logic already present in the Palo Verde design.

Safety Evaluation, Pg.9, Seventh Bullet:

"DAFAS will include features that provide alarms, plant computer data and other operator interfaces to indicate system status."

APS Clarification:

The PVNGS final DAFAS design will provide features that provide alarms to indicate system status to the operators, but does not provide direct data points to the plant computer.

Safety Evaluation, Pg.10, Section B:

"The PVNGS 1,2,3 DAFAS design will use the existing safety related steam generator level instruments for the input signal and will send an actuation signal to the existing safety related AFW system. The DAFAS equipment will be diverse from that used in the Reactor Protection System (RPS) in that the DAFAS logic system will use a computer circuit board with solid state I/O modules while the RPS uses a bistable electro/mechanical system. The DAFAS energizes to actuate and the RPS de-energizes to actuate. The DAFAS interface with the AFW system will be through a relay which will not be used in the RPS. This relay will be of a different manufacturer than that of the AFAS solid state relays."

APS Clarification:

The instrument sensor field bus power source for the DAFAS steam generator level transmitters is integrated with the sensor loop current to voltage converters. It is understood these were excluded from the diversity requirements, since they are technically part of the sensors, which are excluded from the diversity requirements of the ATWS Rule. The current to voltage converter/sensor field bus power source is considered the "sensor output," and is therefore also excluded from the diversity requirements of the ATWS Rule. The instrument channel components which process signals to the DAFAS and separately to the RPS from this point are separate and diverse.

Also, in the fourth sentence, "through a relay" should be through an initiation relay and in the fifth sentence "AFAS solid state relays" should be AFAS initiation relays.

Safety Evaluation, Pg.10, Section C, Paragraph 1:

"Each channel of the DAFAS contains an uninterruptable power supply (UPS) which receives its power from 120 VAC vital buses. The UPSs can supply the DAFAS for up to an hour upon the loss of offsite power."

APS Clarification:

The DAFAS conceptual design submitted to the NRC by APS letter, dated July 31, 1990 (161-03369), included the use of UPS power sources. The final DAFAS design includes a power source to the DAFAS and power supplies within the DAFAS similar to those used in the Diverse Scram System (DSS). The Vital Instrument buses will provide power to the safety-related DAFAS cabinets. Power supplies from a different manufacturer than the existing RPS will be used in the DAFAS.

Safety Evaluation, Pg.11, Section F, Paragraph 1:

".... When they are designed and implemented, it is the staff's understanding that they will be given a Human Factors review and will be in keeping with the licensee's Control Room Design Review process."

APS Clarification:

The Human Factors review referred to in this section is included as part of the normal design change process used at APS. A stand alone human factors review, specifically for ATWS systems, is not required or planned.

FIGURE 1

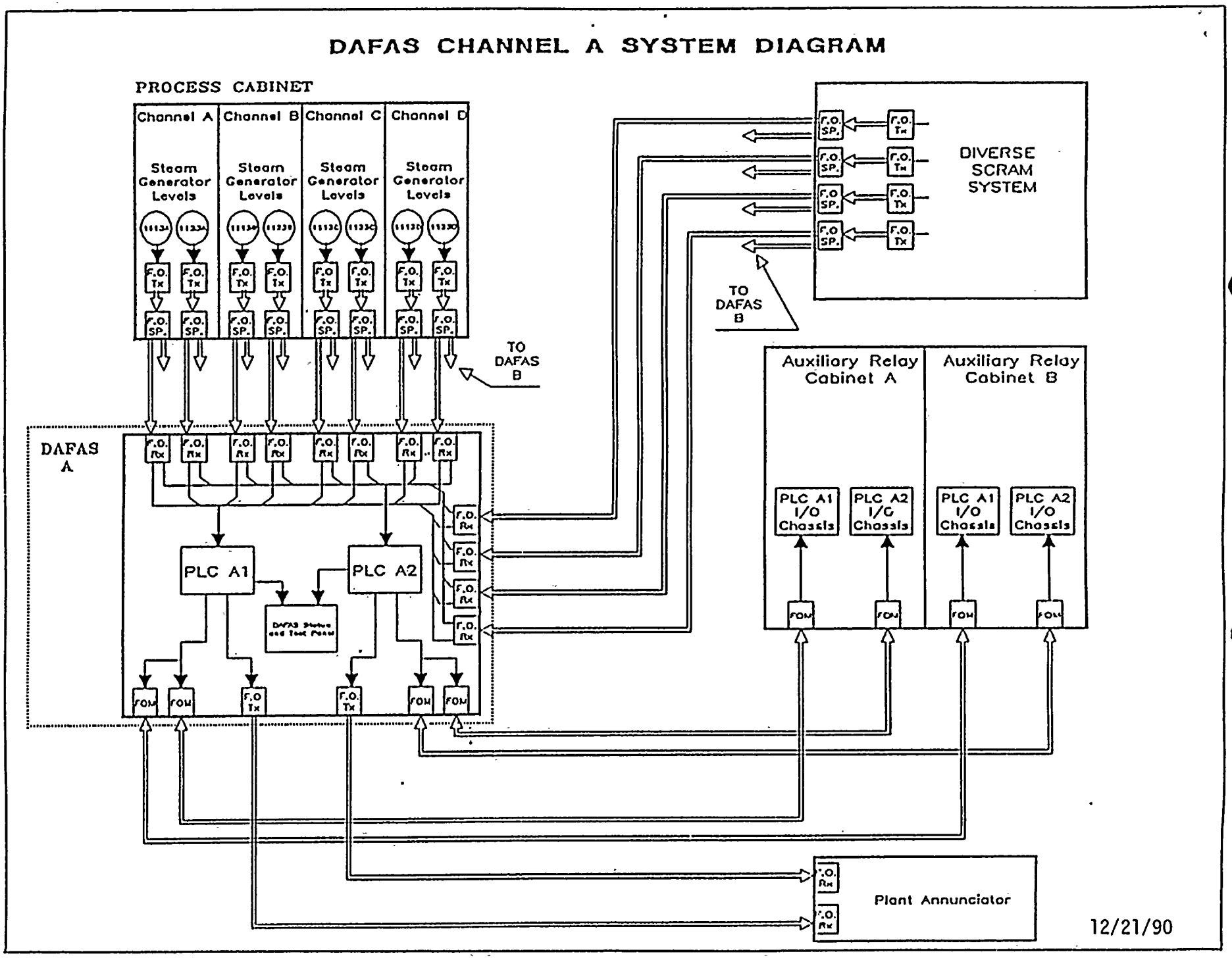
DAFAS CHANNEL A SYSTEM DIAGRAM
PROCESS CABINET
Channel A
Channel B
Channel C
Channel D
Steam Generator Levels
F.O. Tx
F.O. SP.
TO DAFAS B
DAFAS A
F.O. Rx
PLC A1
PLC A2
ROM
DIVERSE SCRAM SYSTEM
TO DAFAS B
Auxiliary Relay Cabinet A
Auxiliary Relay Cabinet B
PLC A1 I/O Chassis
PLC A2 I/O Chassis
Plant Annunciator
12/21/90

FIGURE 2

DAFAS HARDWARE CONFIGURATION

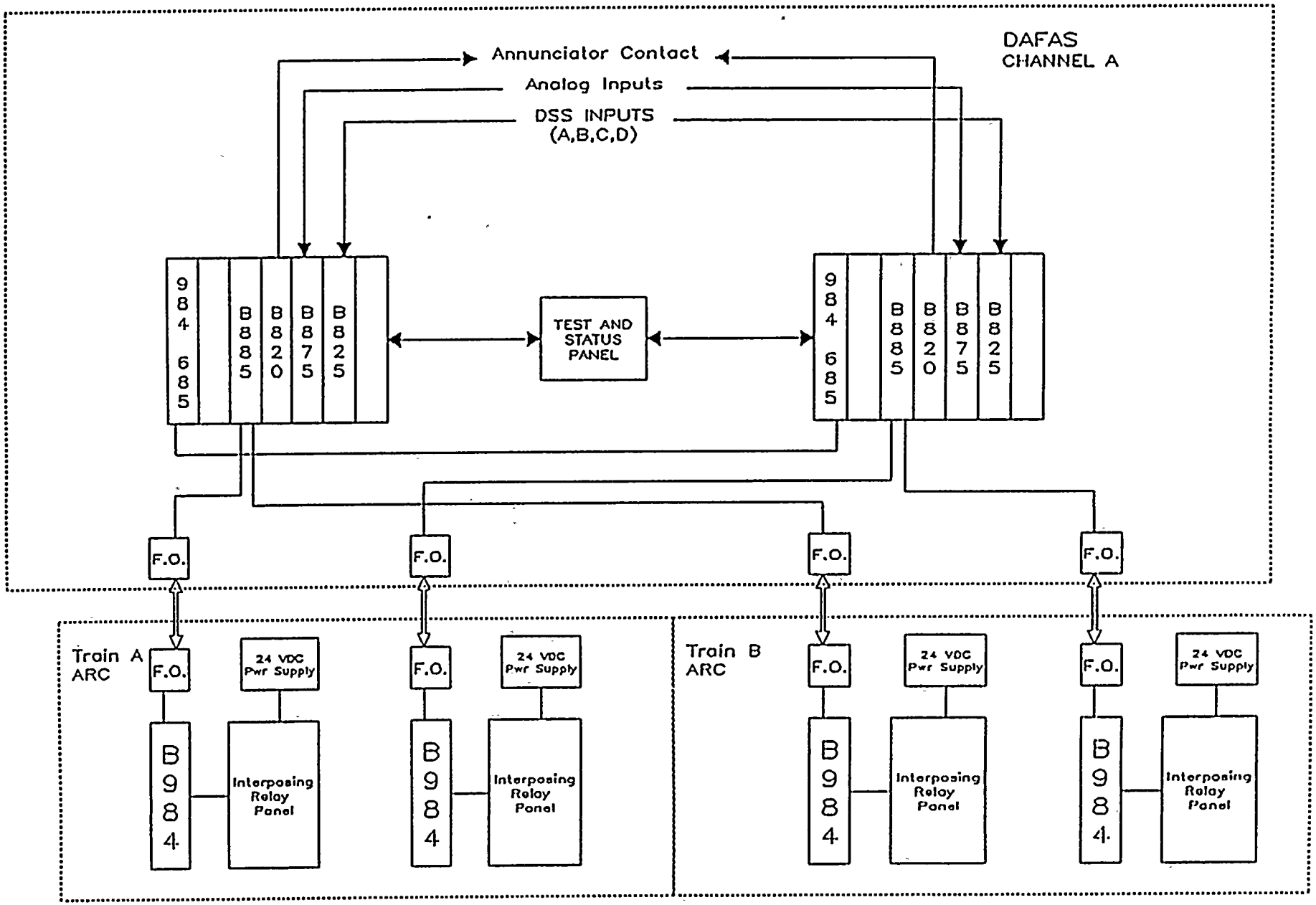

12/21/90