RAIO-1017-56948

October 31, 2017

Docket No. 52-048

U.S. Nuclear Regulatory Commission
ATTN: Document Control Desk
One White Flint North
11555 Rockville Pike
Rockville, MD 20852-2738

SUBJECT: NuScale Power, LLC Response to NRC Request for Additional Information No. 205 (eRAI No. 9044) on the NuScale Design Certification Application

REFERENCE: U.S. Nuclear Regulatory Commission, "Request for Additional Information No. 205 (eRAI No. 9044)," dated September 01, 2017

The purpose of this letter is to provide the NuScale Power, LLC (NuScale) response to the referenced NRC Request for Additional Information (RAI).

The Enclosure to this letter contains NuScale's response to the following RAI Questions from NRC eRAI No. 9044:

- 09.03.02-1
- 09.03.02-2
- 09.03.02-3
- 09.03.02-4
- 09.03.02-5
- 09.03.02-6
- 09.03.02-7
- 09.03.02-8

This letter and the enclosed response make no new regulatory commitments and no revisions to any existing regulatory commitments.

If you have any questions on this response, please contact Carrie Fosaaen at 541-452-7126 or at cfosaaen@nuscalepower.com.

Sincerely,

Zackary W. Rad
Director, Regulatory Affairs
NuScale Power, LLC

Distribution: Gregory Cranston, NRC, OWFN-8G9A
Samuel Lee, NRC, OWFN-8G9A
Anthony Markley, NRC, OWFN-8G9A

Enclosure 1: NuScale Response to NRC Request for Additional Information eRAI No. 9044

Enclosure 1:

NuScale Response to NRC Request for Additional Information eRAI No. 9044

Response to Request for Additional Information
Docket No. 52-048

eRAI No.: 9044
Date of RAI Issue: 09/01/2017

NRC Question No.: 09.03.02-1

Regulatory Requirements:

10 CFR 50.34(f)(2)(xxvi) requires that applicants "provide for leakage control and detection in the design of systems outside containment that contain (or might contain) accident source term radioactive materials following an accident. Applicants shall submit a leakage control program, including an initial test program, a schedule for re-testing these systems, and the actions to be taken for minimizing leakage from such systems. The goal is to minimize potential exposures to workers and public, and to provide reasonable assurance that excessive leakage will not prevent the use of systems needed in an emergency." DSRS Section 9.3.2 specifies that to prevent unnecessarily high exposures to workers and the public and to maintain control and use of the systems during an accident, a program should be implemented to minimize leakage from the sampling system to be as low as practical levels. The DSRS also specifies that excessive leakage will not prevent the use of the system under accident conditions and that the leakage control program will include measures to minimize the leakage from the systems.

Key Issue: The application does not provide sufficient details and clarity to determine if the potential leakage rate is minimized to be as low as practical

NuScale COL Item 9.3-1 specifies that a COL applicant will provide a leakage control program, including an initial test program, to satisfy the programmatic aspects of this requirement. It is acceptable to leave this programmatic responsibility to the COL applicant; however, the staff notes that most of the equipment associated with the sampling system (including most portions of the CVCS and CES) are non-safety related and non-seismically qualified (See DCD Table 3.2-1, "Classification of Structures, Systems, and Components"). In addition, design aspects that facilitate meeting this requirement are generic and appropriate to be addressed as part of a standard design certification. In order to take samples following an accident, override of the containment isolation valves in the CVCS and CES systems is required to open the valves and take samples. If these valves are opened and there is a leak or failure in these non-safety related and non-seismically qualified systems, accident source term could be released outside of the containment into the reactor building and, potentially the environment.

Requested Additional Information:

1. Explain the leakage control and detection capabilities in the design of these systems as required by 10 CFR 50.34(f)(2)(xxvi). Including how the design ensures that leakage is controlled and quickly detected and mitigated so that doses to workers and the public are acceptable.
2. Please update the DCD to provide additional information regarding how the design minimizes a potential radioactive release and worker exposure in this regard and how it adequately allows for the use of systems needed in an emergency in accordance with the requirements of 10 CFR 50.34(f)(2)(xxvi).

NuScale Response:

The chemical and volume control system (CVCS) and containment evacuation system (CES) are nonsafety-related systems that have no safety-related SSC. The post-accident sampling function is not relied upon during or following any design basis event to assure the capability to shut down the reactor and maintain it in a safe shutdown condition or the capability to prevent or mitigate the consequences of accidents with offsite exposures comparable to the applicable guideline exposures. Because the post-accident sampling function is not relied upon during or following any design basis event, leakage control and detection of that function is not relied upon during or following any design basis event. Therefore, classification of structures, system, and components associated with the post-accident sampling function as non-safety related and non-seismically qualified per FSAR Table 3.2-1 is acceptable.

The CVCS has leakage control and detection capabilities as described in FSAR Section 9.3.4.3. The primary means of leakage control during accident conditions is provided by the CVCS containment isolation valves (CIVs). The CVCS is also provided with leak detection instrumentation capable of continuously comparing the reactor coolant system (RCS) mass flowrates removed from the RCS and returned to the RCS by the CVCS (including consideration for makeup or letdown) during normal operation. An unaccounted for difference in this mass flowrate indicating a net loss of RCS coolant initiates an alarm in the main control room (MCR) upon reaching the high setpoint. The CVCS module isolation valve located outboard of the safety-related containment vessel containment isolation valves (CIVs) as shown on FSAR Figure 9.3.4-1 also receive an automatic isolation signal when leak detection instrumentation detects leakage above the setpoint in the CVCS or process sampling system (PSS). This is a non-safety function and is intended to promptly isolate smaller CVCS leaks that would potentially take longer for the safety-related CIVs to close and isolate at safety system settings. Additionally, the CVCS remote-operated sample line isolation valve located downstream of the CVCS module isolation valve (refer to FSAR Figure 9.3.6-1) can also be closed in event of sample line or system leakage during normal operation or post-accident conditions to minimize potential radioactive release and worker exposure.

The CES has leakage control and detection capabilities as described in FSAR Section 9.3.6. and Table 12.3-16. The primary means of leakage control during accident conditions is provided

by the CES containment isolation valves (CIVs). The CES remote-operated sample line isolation valve located downstream of the CES CIVs (refer to FSAR Figure 9.3.6-1) can be closed in event of sample line leakage or system leakage during normal operation or post-accident conditions to minimize potential radioactive release and worker exposure.

1. The PSS design includes provisions for leakage control and detection to minimize a potential radioactive release and worker exposure in event of leakage on sample line or on the interfaced systems such as CVCS and CES. Flow and pressure instrumentation on the sample lines can provide indication of a potential leak. The CVCS and CES designs include remote-operated sample line isolation valves (refer to FSAR Figure 9.3.4-1 and Figure 9.3.6-1 respectively) that can be closed in event of sample line or system leakage to minimize potential radioactive release and worker exposure.

2. Radiation monitoring capabilities are provided for detecting excessive radiation level resulting from system leakage. The sample line can be isolated upon detection of high radiation by the CVCS or CES process radiation monitors located upstream of the sample line (refer to FSAR Figure 9.3.4-1 and Figure 9.3.6-1 respectively) . The principal radionuclides being measured by the CES and CVCS process radiation monitors and the detection range are described in FSAR Table 11.5-4. The primary sampling system and the containment sampling system equipment areas are also equipped with fixed area radiation monitors providing detection of system leakage during normal operation and post-accident conditions. The principal radionuclides being measured by and the detection range of these fixed area radiation monitors are described in FSAR Table 12.3-10.

A revision to FSAR Section 9.3.2.3 in response to this RAI question is included with the response to RAI question 9.3.2-8.

Impact on DCA:

FSAR Section 9.3.2.3 has been revised as described in the response above and as shown in the markup provided in this response.

Response to Request for Additional Information
Docket No. 52-048

eRAI No.: 9044
Date of RAI Issue: 09/01/2017

NRC Question No.: 09.03.02-2

Regulatory Requirements and Guidance:

10 CFR Part 50, Appendix A, General Design Criterion 64, requires that means shall be provided for monitoring the reactor containment atmosphere, spaces containing components for recirculation of loss-of-coolant accident fluids, effluent discharge paths, and the plant environs for radioactivity that may be released from normal operations, including anticipated operational occurrences, and from postulated accidents.

10 CFR 50.34(f)(2)(viii) requires that applicants provide a capability to promptly obtain and analyze samples from the reactor coolant system and containment that may contain accident source term radioactive materials without radiation exposures to any individual exceeding 5 rems to the whole body or 50 rems to the extremities. In addition, NUREG-0737 recommends prompt sampling under accident conditions.

DSRS Section 9.3.2 states that the primary review organization and the organization responsible for the review of radiation protection verify that provisions are made for purging sampling lines and for reducing plateout in sample lines (e.g., with heat tracing).

Key Issue: There is not enough information how heat tracing will be implemented in the design.

DCD Section 9.3.2.2.3, under “Containment Gas Post-Accident Monitoring Sampling,” the applicant indicates that the PSS piping is heat traced to prevent the build-up of condensate within the containment gas monitoring lines and analyzer to ensure monitoring capability under accident conditions.

Requested Additional Information:

It is unclear how heat tracing will be implemented in the design, e.g., what power supply will be used to heat trace the sample lines. If the heat tracing is not supplied from a reliable power supply and the power supply is non-functional following a design basis accident, it is unclear how it can be ensured that reliable samples will be able to be taken. Please provide additional

information regarding which power supply will be used to perform heat tracing and how it can be assured that heat tracing can be performed following a design basis accident.

NuScale Response:

There are no design basis events in the NuScale design that result in core damage. Any postulated core damage would be due to a beyond design basis event. As stated in FSAR Section 7.1.1.2.2, in the NuScale design, the extent of core damage is estimated using data taken from the core exit thermocouples and the inside bioshield area radiation monitors. Therefore, post-accident containment sampling is not used for the purpose of core damage assessment in the NuScale design. The containment sampling system, including the heat trace for the containment gas sample line, serves no safety-related or risk significant functions. Post-accident containment sampling fulfills the hydrogen monitoring function required per 10 CFR 50.34(f)(2)(xvii)(C) and 10 CFR 50.44(c)(4); however, this function is nonsafety-related.

There is no strict time frame in which the containment sampling must be performed, as the hydrogen monitor variable is not a post-accident monitoring (PAM) variable. The hydrogen monitor is classified as a backup variable that provides diagnostic or confirmatory information and is used for long-term surveillance. As summarized in the Combustible Gas Control Technical Report (TR-0716-50424), the analysis demonstrates that NuScale containment structural integrity is not challenged by bounding combustion events, propagated by combustible gas concentrations generated within the first 72 hours of any design-basis event (DBE) or beyond-design-basis event (BDBE). No compensatory measures or mitigating actions are required for any scenario, within the first 72 hours of an event. Accumulation of combustible gases beyond 72 hours can be managed by licensee implementation of severe accident management guidelines (SAMGs) because after 72 hours, sufficient time is available to implement mitigating actions.

Therefore, after an event, operational efforts would be focused on creating favorable core conditions and containing any fission products that may have been released to the containment vessel. The post-accident containment sampling could be done when, among other conditions, power would be available. As described in FSAR Section 9.3.2, it is expected that plant conditions would be amenable to perform containment gas sampling at approximately 24 hours after an event initiation, assuming power is available.

The heat tracing power is provided by the normal DC power system, which may be powered by the backup power supply system (BPSS) in the event of a loss of the normal AC power sources as described in FSAR Section 8.3.1.1.2.

A revision to FSAR Section 9.3.2.2.3, completed in response to this RAI question, is included with the response to RAI question 9.3.2-8.

Impact on DCA:

FSAR Section 9.3.2.2.3 has been revised as described in the response above and as shown in the markup provided in this response.

Response to Request for Additional Information
Docket No. 52-048

eRAI No.: 9044
Date of RAI Issue: 09/01/2017

NRC Question No.: 09.03.02-3

Regulatory Requirements:

10 CFR Part 50, Appendix A, General Design Criterion 64, requires that "means shall be provided for monitoring the reactor containment atmosphere, spaces containing components for recirculation of loss-of-coolant accident fluids, effluent discharge paths, and the plant environs for radioactivity that may be released from normal operations, including anticipated operational occurrences, and from postulated accidents."

10 CFR 50.34(f)(2)(vii) requires the performance of radiation shielding design reviews to ensure the design permits adequate access to important areas and provides for protection of safety equipment from radiation, following an accident. DSRS Section 12.3-12.4, references this requirement and the associated NUREG-0737, Section II.B.2, which provides additional guidance on meeting this requirement.

10 CFR 50.34(f)(2)(viii) requires that applicants provide a "capability to promptly obtain and analyze samples from the reactor coolant system and containment that may contain accident source term radioactive materials without radiation exposures to any individual exceeding 5 rems to the whole body or 50 rems to the extremities." In addition, NUREG-0737 recommends prompt sampling under accident conditions.

Key Issues: The application does not have sufficient detail and clarity to determine if and how gaseous samples will be obtained post-accident and that applicable requirements will be met.

DCD Section 9.3.2 indicates that post-accident sampling of containment gas is possible in the NuScale design and "would be used for post-accident sampling only if the information sought is essential and cannot be determined or estimated by other means". However, the DCD is unclear and inconsistent regarding how post accident gaseous samples of the containment atmosphere will be obtained.

In DCD Section 9.3.2.2.3, under "Off-Normal Operations", it states, "The CES (containment evacuation system) is a low pressure system not designed for full containment design pressure and has not been provided with override capability. Accident simulations project that in

approximately 24 hours following a containment isolation initiation, RCS temperatures will fall below 200 degrees Fahrenheit, permitting the opening of the containment evacuation system CIVs to support sampling at that time, if necessary."

While in Section 9.3.2.2.3, under "Containment Gas Post-Accident Monitoring and Sampling" it states, "Plant conditions amenable to plant sampling exist within 2 hours of the most limiting design basis event, and will require override of the CNV (containment vessel) containment isolation valves for the CES and CFDS (containment flooding and drain system)." Furthermore, it also states, "the CNV isolation valves for CES and CFDS are opened to establish the monitoring and sampling flow paths. A manual logic override is required to open the CNV isolation valves if RCS temperature is greater than 200 degrees F and containment parameters are greater than the containment isolation setpoints."

Requested Additional information:

Based on the above information and apparent inconsistencies, please address the following.

1. It is unclear to staff at what time after an accident and under what conditions, containment gaseous samples are capable of being taken. It is also unclear if the isolation valves for the CES are provided with override capability or not. Please provide this information and update the DCD as appropriate to correct any inconsistencies.
2. It is unclear which valves are required to be opened to take gaseous samples (only the CES or both the CES and CFDS?). Please clarify which valves need to be opened. If both CES and CFDS valves need to be opened to take gaseous samples, please clarify why the isolation valves for the CFDS (which goes to a part of the containment vessel that is expected to be submerged following an accident), needs to be opened to obtain a gas sample. Update the DCD as appropriate.
3. Likewise, it is unclear if the systems are appropriately designed to handle the temperatures and pressures that will be present. DCD Section 9.3.6, "Containment Evacuation System and Containment Flooding and Drain System," does not specify the design limitations of the system. It is not clear if any relief valves are provided and at what pressure such relief valves would actuate (a significant release into the Reactor Building could occur, even if the piping were still intact, if a relief valve lifted, or a seal was damaged by heat). Please clarify the design limitations of the CES and CFDS systems and if the CES and CFDS systems downstream of the containment isolation valves are capable of withstanding the temperatures and pressures present 2 hours after an accident or if approximately 24 hours and less than 200 degrees Fahrenheit is required to open these valves. Update the DCD as appropriate.
4. It is unclear if appropriate equipment and power will be available to manually override and open valves to take samples during accident condition. Please describe the process and equipment that will be needed to re-open these valves and if this equipment is ensured to be operational following a design basis accident. Update the DCD as appropriate. Is this equipment operable from the Main Control Room, or is operator action in the field required? Is AC electrical power required to open these valves? How is it ensured that the required equipment can be appropriately operated following a design basis accident?

NuScale Response:

1. The containment isolation signal (CIS) actuates on high containment pressure (containment pressure > 9.5 psia) or low pressurizer level (level < 20%). The CIS automatically is removed when the CIS input parameters (high containment pressure and low pressurizer level) are clear or the reactor coolant system (RCS) temperature is less than 200 degrees F. When the RCS temperature is below 350 degrees F, the containment pressure input is no longer used for CIS (i.e., automatic operating bypass of CIS). If the pressurizer level remains below 20% due to a decrease in reactor coolant inventory , the RCS temperature must be less than 200 degrees F for automatic operating bypass of CIS.

With CIS actuated, the containment evacuation system (CES) containment isolation valves (CIVs) cannot be opened using normal controls available in the main control room (MCR). The CIS manual override switches are provided for containment flood and drain system (CFDS) CIVs in the MCR, but not provided for the CES CIVs. To override the CIS for CES CIVs, operator actions are required to open the CES CIVs from the local control cabinet located outside the MCR.

While the capabilities to manually override the CIS and open the CES and CFDS CIVs are provided, it is expected that post-accident sampling will be performed when plant conditions are amenable to opening CIVs without overriding the CIS to minimize risks to plant equipment and personnel. Additionally, sampling of containment gas will be performed when plant conditions do not exceed design limitations of the CES and CFDS piping. The design pressure and temperature of the CES piping downstream of the CIVs are 250 psig and 650 degrees F. The design pressure and temperature of the CFDS piping downstream of the CIVs are 150 psig and 300 degrees F.

While the plant responses in accident conditions show the containment pressure is reduced to 150 psia in approximately two (2) hours after event initiation, the CIS might not be automatically bypassed by this time to enable opening of the CES and CFDS CIVs using normal controls available inside the MCR. Plant responses in design basis events shows the RCS cooling down to less than 200 degrees F within 24 hours after event initiation in most cases. For the most limiting design basis event, it can take more than 24 hours after an event initiation for the RCS temperature to be less than 200 degrees F. Therefore, it is expected that the containment gas post-accident sampling in the most limiting design basis event can be performed 24 hours after event initiation without overriding the CIS. FSAR Section 9.3.2.2.3 has been revised to clarify the plant conditions that are amenable to obtaining post-accident containment gas samples.

2. Post-accident sampling of containment gas requires aligning PSS, CES, and CFDS to create a closed sample loop where the containment gas sample can be routed from the CES to PSS containment sampling system, and can be returned to the CNV via the CFDS process line. While the CFDS piping in the CNV in expected to be partially submerged following an accident,

the CFDS provides the optimal return path for the gas discharged from the containment sampling system sample pump to the CNV. Therefore, opening of CFDS CIVs is required for returning the gas back to the containment. Returning the containment gas sample back to the CNV limits potential radioactive release outside of the containment. FSAR Figure 9.3.6-2 has been revised to show the PSS sample return line connection to the CFDS before the respective module isolation valve.

3. The design pressure and temperature of the CES piping downstream of the CIVs are 250 psig and 650 degrees F. The design pressure and temperature of the CFDS piping downstream of the CIVs are 150 psig and 300 degrees F. The post-accident containment gas sample loop will not be put into operation if the containment pressure exceeds CES and CFDS design limits.

While plant responses in accident conditions show containment pressure is reduced to 150 psia in approximately two (2) hours following an event initiation, the CIS will not be cleared at 2 hours if the PZR level is below 20%. Plant responses in design basis event shows that the reactor module is cooled down to less than less than 200 degrees F within 24 hours after event initiation in most cases and the automatic operating bypass of CIS is expected to occur such that the CES CIVs can be opened to support post-accident sampling. For the most limiting design basis event, it may take 24 hours or more after an event initiation for RCS temperature to be less than 200 degrees F. Therefore, the post-accident containment gas sampling in most limiting design basis condition can be performed 24 hours after event initiation without overriding the CIS.

FSAR Section 9.3.2.2.3 has been revised to clarify the plant conditions that are amenable to obtaining post-accident containment gaseous samples. The revision also includes discussion of the design limitations of the CES and CFDS and how the CES and CFDS components downstream of the CIVs are capable of withstanding the temperatures and pressures expected during post-accident sampling of containment gas.

4. The CVCS, CES, and CFDS CIVs can be re-opened from the MCR via the MPS using the Enable Nonsafety Control switches (normal control switch) coincident with no containment isolation signal (CIS) being present. While the capabilities to manually override the CIS and open the CIVs are available, it is expected that post-accident sampling will be performed when plant conditions are amenable to opening CIVs without overriding the CIS to minimize risks to plant equipment and personnel.

The CVCS, CES, and CFDS CIVs are the primary system containment isolation valves (PSCIVs) as discussed in FSAR Section 6.2.4. The PSCIV design features ensure that the PSCIVs can be re-opened following a design basis event to support post-accident sampling (if needed). The PSCIVs have an independent hydraulic actuator that maintains the valve open. Two different hydraulic control skids located on different levels of the reactor building are provided to satisfy the single-failure separation requirement. The low voltage AC electrical distribution system (ELVS) supplies power to the hydraulic pump drivers on the hydraulic skids. The ELVS loads are powered by the backup power supply system (BPSS) in a loss of normal AC power source event. The hydraulic control skid is also designed to support a limited number

of reopenings of the CIVs after a design basis event without reliance on AC power. Since there is no is no strict time frame in which the post-accident containment sampling must be performed, the sampling will done at a more opportune time when, among other conditions, power would be available to re-open the CIVs using normal control provided in the MCR.

The hydraulic actuators are controlled by two divisions of the module protection system (MPS). Each hydraulic control skid contains safety-related vent solenoids for each PSCIV. The MPS provides power to the solenoids to keep the valve open. The highly reliable DC power system (EDSS) is the power source for the MPS . Two different DC power sources are provided to division loads to prevent the loss of a division due to the loss of one DC source.

FSAR Sections 9.3.2.2.3 and 9.3.2.5 and FSAR Figure 9.3.6-2 have been revised to clarify the post-accident sampling process and equipment required to support sampling. The FSAR changes referred to in this RAI are included with the response to RAI 9.3.2-8.

Impact on DCA:

FSAR Sections 9.3.2.2.3 and 9.3.2.3 and FSAR Figure 9.3.6-2 have been revised as described in the response above and as shown in the markup provided in this response.

Response to Request for Additional Information
Docket No. 52-048

eRAI No.: 9044
Date of RAI Issue: 09/01/2017

NRC Question No.: 09.03.02-4

Regulatory Requirements:

10 CFR Part 50, Appendix A, General Design Criterion 61, requires, in part, that "systems which contain radioactivity shall be designed to assure adequate safety under postulated accident conditions, including with appropriate containment, confinement, and filtering systems."

10 CFR Part 50, Appendix A, General Design Criterion 64, requires that "means shall be provided for monitoring the reactor containment atmosphere, spaces containing components for recirculation of loss-of-coolant accident fluids, effluent discharge paths, and the plant environs for radioactivity that may be released from normal operations, including anticipated operational occurrences, and from postulated accidents."

10 CFR 50.34(f)(2)(vii) requires the performance of radiation shielding design reviews to ensure the design permits adequate access to important areas and provides for protection of safety equipment from radiation, following an accident. DSRS Section 12.3-12.4, references this requirement and the associated NUREG-0737, Section II.B.2, which provides additional guidance on meeting this requirement.

10 CFR 50.34(f)(2)(viii) requires that applicants "provide a capability to promptly obtain and analyze samples from the reactor coolant system and containment that may contain accident source term radioactive materials without radiation exposures to any individual exceeding 5 rems to the whole body or 50 rems to the extremities." In addition, NUREG-0737 recommends prompt sampling under accident conditions.

Key Issues: The application doesn't have sufficient details and clarity with regard to sampling RCS fluids following an accident while meeting the dose limits to workers.

DCD Section 9.3.2.2.3, under "Reactor Coolant Post-Accident Sampling," states that at temperatures below 200 degrees Fahrenheit with insufficient RCS pressure, a nitrogen overpressure can be established to take reactor coolant samples.

DCD Tier 2 Revision 0, Figure 9.3.1-1, "Instrument Air and Service Air System Diagram," shows

that the compressed air system (in addition to the nitrogen gas system) can provide gas to the Containment Evacuation System. It is unclear if this is where the nitrogen is being supplied from or if it is being supplied from elsewhere and how the design is adequate to ensure that nitrogen will push RCS fluid through the CVCS system and sampling line to the sampling point.

Requested Additional Information:

1. Please provide information sufficient to determine the source of the nitrogen and ensure that the pressure is sufficient to push the RCS fluid to the sampling point. As part of the response, provide information on minimum water levels in the reactor following design basis accidents, the CVCS system piping connection heights, and nitrogen injection point(s). Update the DCD to discuss how nitrogen injection is adequate to perform this task.
2. Injecting nitrogen, or other gases, into the RCS will impact future samples of the containment atmosphere. Not only does nitrogen have the potential to dilute the containment gases, but also it could potentially result in backflow contamination of the instrument air system (See Bulletin 80-10, “Contamination of Nonradioactive System and Resulting Potential for Unmonitored, Uncontrolled Release of Radioactivity to Environment”).
    a. Please discuss the impacts of injecting nitrogen, or other gases, into the RCS on the ability to collect accurate and useful containment gaseous samples and how the design ensures that useful containment atmosphere samples can still be taken following gas injection.
    b. Please describe in appropriate detail how the design prevents backflow into the instrument air system or how any backflow will not result in additional exposure to workers or additional release beyond what is accounted for in the accident analysis.
    c. Update the DCD as appropriate to address the above issues.

NuScale Response:

1. The nitrogen distribution system (NDS) is designed to supply nitrogen to the reactor pressure vessel (RPV) high point degasification line located at the top of the pressurizer (PZR) through high pressure piping in the chemical and volume control system (CVCS) as shown on FSAR Figure 9.3.4-1 and Figure 9.3.1-2. The NDS uses the high pressure manifold (designed to operate at 250 psia) portion of the system to perform this function. It will establish sufficient reactor coolant system (RCS) pressure (approximately 60 psia) to provide suction head to operate the CVCS recirculation pumps during startup and shutdown. This NDS injection point can also be used to pressurize the RCS to establish flow to the process sampling system (PSS) from the CVCS in the event that a liquid RCS sample is desired during startup or shutdown or following a design basis accident.

    Actuation of the emergency core cooling system (ECCS) will result in opening of the reactor vent valves (RVVs) at the top of the PZR releasing steam and noncondensible

gasses to the containment vessel (CNV). The reactor recirculation valves (RRVs) located near the bottom of the reactor vessel will also open allowing condensed coolant in the CNV to return to the reactor vessel. The reactor vessel RCS level will equilibrate at approximately 10 feet above the active fuel (250 inch elevation) based on FSAR Figure 15.0-6. The RCS level will be below the CVCS discharge line nozzle (307 inch elevation) in this condition. Borated water will be added through the CVCS or the containment flooding and drain system (CFDS) during the event recovery process to raise the water level in the reactor vessel and containment to the level of the PZR baffle plate (580 inch elevation). This level corresponds to the normal RCS level prior to Mode 4 entry and is high enough above the CVCS discharge line nozzle to enable sample flow to the CVCS process sample line. Nitrogen will be supplied by the NDS to the CVCS and will flow through the pressurizer to pressurize the RPV and the CNV in order to establish RCS flow to the CVCS sample line. Once RCS pressure is raised above the required minimum for CVC operation the RVVs and RRVs may be closed, isolating the CNV from the RPV.

2. The containment atmosphere can be sampled prior to injection of nitrogen. Injection of nitrogen will not affect the ability of the containment evacuation system or process sample system to obtain accurate or useful containment atmosphere samples. Initial pressurization of the RPV and CNV with nitrogen to establish adequate pressure to obtain a liquid RCS sample will dilute the containment atmosphere sample. Once the RPV has been isolated from the CNV subsequent pressurization of the RPV with nitrogen will not further dilute the containment atmosphere.

   Even in the event of a LOCA inside containment, injection of nitrogen to support RCS liquid sampling does not have a negative impact on containment sampling. Again, the containment atmosphere can be sampled prior to injection of nitrogen. One purpose of taking containment gaseous samples is to determine if the containment atmosphere is combustible. Combustibility can be determined with the nitrogen present. The second reason for obtaining a containment gaseous sample is to provide insights regarding fuel damage. However, liquid samples provide more information regarding fuel damage than gaseous samples provide. For these reasons, injection of nitrogen into containment does not reduce the value of samples obtained subsequently.

   The instrument air system (IAS), depicted on FSAR Figure 9.3.1-1, supplies compressed air to operate pneumatically controlled valves and instrumentation in the NDS. The IAS does not supply nitrogen to the CNV to pressurize the containment for post-accident liquid RCS sampling, or supply compressed air directly to the containment evacuation system (CES) to pressurize containment. The IAS supplies compressed air to the service air system (SAS). The SAS is used to supply compressed air to the CNV through the reactor building (RXB) supply line to the CES to support draining the CNV prior to startup and to equalize CNV pressure with the refueling pool prior to unbolting the containment flange for disassembly. Backflow from the CNV to the compressed air system is controlled through the use of check valves in the SAS supply to the RXB and in the IAS supply to the SAS. Nitrogen backflow from RCS to the NDS is controlled using a check

valve on the nitrogen injection line to the RPV degasification line of the CVCS as shown on the updated FSAR Figure 9.3.4-1.

Revisions to FSAR Section 9.3.2.2.3 and FSAR Figure 9.3.4-1 in response to this RAI question are included with the response to RAI question 9.3.2-8.

Impact on DCA:

FSAR Section 9.3.2.2.3 and FSAR Figure 9.3.4-1 have been revised as described in the response above and as shown in the markup provided in this response.

Response to Request for Additional Information
Docket No. 52-048

eRAI No.: 9044
Date of RAI Issue: 09/01/2017

NRC Question No.: 09.03.02-5

Regulatory Requirements:

10 CFR 50.34(f)(2)(vii) requires that applicants "perform radiation and shielding design reviews of spaces around systems that may, as a result of an accident, contain accident source term radioactive materials, and design as necessary to permit adequate access to important areas and to protect safety equipment from the radiation environment."

10 CFR 50.34(f)(2)(viii) requires that applicants "provide a capability to promptly obtain and analyze samples from the reactor coolant system and containment that may contain accident source term radioactive materials without radiation exposures to any individual exceeding 5 rems to the whole body or 50 rems to the extremities. Materials to be analyzed and quantified include certain radionuclides that are indicators of the degree of core damage (e.g., noble gases, radioiodines and cesiums, and nonvolatile isotopes), hydrogen in the containment atmosphere, dissolved gases, chloride, and boron concentrations."

10 CFR Part 50, General Design Criteria (GDC) 61, requires in part that systems that contain radioactivity shall be designed with adequate safety under normal and postulated accident conditions be designed with suitable shielding for radiation protection.

10 CFR 20.1101(b) requires that applicants provide engineering controls based upon sound radiation protection principles to achieve occupational doses and doses to members of the public as low as is reasonably achievable (ALARA).

Key Issue: The application does not have sufficient details and clarity to determine if shielding is adequate to meet dose requirements for workers.

DCD Section 9.3.2 discusses the option of providing temporary shielding around the sample lines during post-accident conditions.

DCD Section 12.3.1.1.12 indicates that, "Sample stations are designed with appropriate ventilation and shielding to minimize occupational exposures." However, the specifics of the shielding are not provided and it is unclear what is considered "appropriate" shielding.

Requested Additional Information:

In order for the staff to reach its safety and compliance conclusions regarding the regulatory requirements cited above, the staff needs to understand the details of radiation protection measure being taken to ensure exposures are within limits and ALARA. The DCD does not contain sufficient detail in order for the staff to conclude that the applicable regulatory requirements are met. Consequently,

Provide a more detailed description of the shielding for the sample racks (including materials and thicknesses) and update the DCD accordingly. Ensure that shielding is sufficient to meet applicable dose criteria and radiation zoning.

NuScale Response:

The post-accident primary coolant sample is collected via the normal CVCS sample line flow path to the primary system sample panel located in the CVCS gallery area of Elevation 50' RXB (i.e., Room 010-114 or Room 010-125 as shown on FSAR Figure 1.2-12). The sample panels are located in front of the 20" concrete and steel partition wall that is part of the building structure. Shielding of the sample panel during normal operation and accidents is achieved by routing radioactive components (e.g., sample lines and sample coolers) behind this partition wall, which lowers the dose rates in the sample panel areas.

In the NuScale design, the potential accident source term from core damage would remain confined within the NuScale Power Module. If the decision was made to obtain a post-accident sample following a DBE or BDBE, temporary shielding could be erected prior to opening a containment isolation valve so workers could work in a low dose area. As described in FSAR Section 12.4.1.8, post-accident doses in the CVCS gallery area were evaluated and determined to be less than 4.6 rad/hr assuming the use of a 0.25" lead equivalent temporary shielding.

FSAR Section 12.3.1.1.12 has been revised to clarify shielding for sample stations (i.e. sample panels). COL Item 9.3-2 has been revised to specify plans and provisions for obtaining samples under accident conditions. These FSAR changes are included with the response to RAI 9.3.2-8.

Impact on DCA:

FSAR Section 12.3.1.1.12 and COL Item 9.3-2 have been revised as described in the response above and as shown in the markup provided in this response.

Response to Request for Additional Information
Docket No. 52-048

eRAI No.: 9044
Date of RAI Issue: 09/01/2017

NRC Question No.: 09.03.02-6

Regulatory Requirements:

10 CFR Part 50, General Design Criterion (GDC) 64, requires, in part, that means shall be provided for monitoring the plant environs for radioactivity that may be released from normal operations, including anticipated operational occurrences, and from postulated accidents.

10 CFR 20.1501 requires, in part, radiation surveys necessary to comply with the regulations and to evaluate potential radiological hazards. DSRS Section 12.3-12.4 indicates that the area radiation monitoring system will be acceptable if it meets several requirements, including the requirements of 10 CFR 20.1501

Key Issues: The application must have sufficient details and clarity to identify the radiation monitoring systems used for normal and accident releases and to demonstrate compliance with the applicable requirements.

In the NuScale DCD, Tier 2, Section 9.3.2.3 it specifies that a break in a sample line would result in activity release and a resulting actuation of area radiation monitors. However, radiation monitors are not specifically identified with numbers or by name, so it is unclear if the applicant is relying on the post-accident area monitors for the primary sampling equipment and containment sampling system equipment areas in DCD Table 12.3-10, “Fixed Area and Airborne Radiation Monitors Post-Accident Monitoring Variables.” However, during normal operations, the amount of radioactivity in the sampling system fluids may not be high enough to trip the room area radiation monitor alarm and therefore, there could be an undetected leak and possible release. Such a release may be more easily detected by a process, effluent, or airborne radiation monitor.

In addition, applicants typically include identification numbers for the individual radiation monitors in DCD Chapters 11 and 12. The numbers are then used to identify the monitors when they are discussed in the DCD text and when they are shown in DCD figures. This allows the staff to identify which monitor is being referred to and allows staff to conclusively evaluate whether the radiation monitor type, range, location, function, etc, are adequate for all of the intended functions. In any event, it is necessary for the staff to understand the design, including

the location and function, of necessary radiation monitors, with sufficient detail to determine compliance with GDC 64, 10 CFR 20.1501, and other applicable regulatory requirements.

Based on the above, staff requests the following, additional information:

1. Verify which radiation monitors are being referred to in the Section 9.3.2.3 text discussed above.
2. If area radiation monitors are being credited to alarm during a normal operation release from the sample systems, please provide additional information describing the area radiation monitors' adequacy to perform this function such as the monitors' sensitivity to adequately identify sampling system releases, recognizing that the monitors will likely also be exposed to other radiation sources (e.g. other reactor building sources, which may be operating at the design basis failed fuel percentage), which could interfere with the monitors ability to adequately detect a sampling system leak.
3. Please consistently identify radiation monitors throughout the DCD (For example, each monitor could be provided with unique numbers in the Chapter 11 and 12 tables, which could then be used when referencing specific monitors throughout the DCD text, tables, and figures).

NuScale Response:

1.The radiation monitors being credited in Section 9.3.2.3 to alarm during a normal operation release from the sample systems are the fixed area monitors provided in the containment sampling system and the primary sampling system equipment areas. The containment sampling system equipment is located in the steam gallery areas (i.e., 010-411 and 010-0418 as shown in FSAR Figure 1.2-16) on Elevation 100' of the RXB, and is monitored by area radiation monitors #134 and #135 (refer to attached Supplemented Table 12.3-12). The primary sampling system equipment is located in the utility areas adjacent to CVCS heat exchanger valve galleries (i.e. 010-114 and 010-125 as shown in FSAR Figure 1.2-10) on Elevation 50' the RXB, and is monitored by area radiation monitors #88 and #96 (refer to attached Supplemented Table 12.3-12). FSAR Section 9.3.2.3 has been revised to clarify which radiation monitors are being credited in Section 9.3.2.3.

2. The principal radionuclides being measured and the detection range of the credited area monitors are described in Table 12.3-10 of the FSAR (i.e., areas are identified as Primary Sampling Equipment and Containment Sampling Equipment areas).

3. Five tables, included in this response, have been prepared that link radiation monitors in the FSAR text with an unoffical numbering system. Three of these tables replicate existing FSAR tables and add one column (on the far right) with the unofficial radiation monitor number. The other two tables show each occurrence radiation monitors in the Tier 1 and Tier 2 text. These tables are:

a. Supplemented Table 11.5-1: Process and Effluent Radiation Monitoring Instrumentation Characteristics
b. Supplemented Table 12.3-11: Fixed Airborne Radiation Monitors
c. Supplemented Table 12.3-12: Fixed Area Radiation Monitors
d. Key to Radiation Monitors in DCA Part 2 - Tier 1
e. Key to Radiation Monitors in DCA Part 2 - Tier 2 (FSAR)

A revision to FSAR Section 9.3.2.3 in response to this RAI question is included with the response to RAI question 9.3.2-8.

Impact on DCA:

FSAR Section 9.3.2.3 has been revised as described in the response above and as shown in the markup provided in this response.

Supplemented Table 11.5-1: Process and Effluent Radiation Monitoring Instrumentation Characteristics											
System	**Quantity**	**Type**	**Service**	**Isotopes**	**Nominal Range**	**Location/Function**	**PAM**	**Safety-related**	**Media**	**Instrument type**	**ID #**
ABS	2	γ	ABS return flow from MHS	Cs-137	1.0E-7 to 1.0E-2 µCi/ml	ABS return flow from MHS heat exchangers 6A and 6B	No	No	Liquid	Adjacent-to-line	**1**
ABS	2	γ	ABS return flow from MHS	Ar-41	3E-3 to 1E-1 µCi/cc	ABS return flow from MHS heat exchangers 6A and 6B	No	No	Gas	Adjacent-to-line	**2**
ABS	1	γ	ABS high pressure condensate tank vent	Ar-41	3E-3 to 1E-1 µCi/cc	ABS 1100 psi condensate tank vent	No	No	Gas	Adjacent-to-line	**3**
ABS	1	γ	ABS high pressure boiler to low pressure boiler cross feed	Ar-41	3E-3 to 1E-1 µCi/cc	High pressure boiler to low pressure boiler cross feed	No	No	Gas	Adjacent-to-line	**4**
ABVS	1	γ	Radioactive waste building ventilation system (particulate)	Cs-137	3.0E-10 to 1.0E-6 µCi/cc	Hot machine shop RWBVS exhaust air	No	No	Gas	Off-line	**5**
BPDS	4	γ	BOP drains	Cs-137	1.0E-7 to 1.0E-2 µCi/ml	Monitors condensate regeneration skid effluent and TGB drains.	No	No	Liquid	In-Line	**6**

BPDS	1	γ	BOP drains	Cs-137	1.0E-7 to1.0E-2 µCi/ml	Inlet to 6A-BPD-TNK-0001 from ABS blowdown	No	No	Liquid	Adjacent-to-line	**7**
CARS	12	γ	Condenser air removal Sys	Ar-41	3.E-3 to 1E+1 µCi/cc	Condenser air removal skid - Ar-41	Yes	No	Gas	Adjacent-to-line	**8**
CARS	12	B	Condenser air removal sys (particulate)	Cs-137	3E-10 to 1E-6 µCi / cc	Condenser air removal skid air particulate	Yes	No	Gas	Off-line (PING)	**9**
CARS	12	γ	Condenser air removal sys (iodine)	I-131	3E-10 to 5E-8 µCi / cc	Condenser air removal skid supply air iodine	Yes	No	Gas	Off-line (PING)	**10**
CARS	12	B	Condenser air removal sys (noble gas)	Kr-85 Xe-133	3E-7 to 1.0E+5 µCi/cc	Condenser air removal skid (NG)	Yes	No	Gas	Off-line (PING)	**11**
CVCS	12	γ	CVCS suction from RCS sample line	Cs-137	1E-7 to 1E-2 µCi / ml	RCS discharge sample line	No	No	Liquid	Adjacent-to-line	**12**
CES	12	γ	Containment evacuation atmosphere gas	Ar-41	3.E-3 to 1E+1 µCi/cc	CES vacuum pump discharge line	No	No	Gas	Adjacent-to-line	**13**
CES	12	B	Containment evacuation atmosphere gas (particulate)	Cs-137	3.E-10 to 1E-6 µCi/cc	CES vacuum pump discharge line particulate	No	No	Gas	Off-line (PING)	**14**
CES	12	γ	Containment evacuation atmosphere gas (iodine)	I-131	3.E-10 to 5E-8 µCi/cc	CES vacuum pump discharge line iodine	No	No	Gas	Off-line (PING)	**15**

CES	12	B	Containment evacuation atmosphere gas (noble gas)	Kr-85 Xe-133	3.E-7 to 1E-2 µCi/cc	CES vacuum pump discharge line (NG)	No	No	Gas	Off-line (PING)	**16**
CES	12	γ	CES sample vessel	Cs-137	3E-10 to 1E-6 µCi / ml	CES sample vessel discharge line.	No	No	Liquid	Adjacent - to-line	**17**
CFDS	2	B	Containment drain separator tank gaseous discharge	Kr-85 Xe-133	3E-7 to 1E-2 µCi / cc	Containment drain separator gaseous discharge lines	No	No	Gas	Off-line	**18**
[[CPS	2	γ	Condensate polisher resin regeneration	Cs-137	1E-7 to 1E-2 µCi/cc	6A, 6B condensate polishing system resin regeneration skid	No	No	Liquid	Adjacent-to-line]]	**19**
CRVS	3	B	Normal control room HVAC system	Kr-85 Xe-133	1E-5 to 1E+1 Rad/hr	Normal control room HVAC system, outside air duct upstream of filter unit	No	No	Gas	In-line	**20**
CRVS	2	B	Normal control room HVAC system (particulate)	Cs-137	3E-10 to 1E-6 µCi / cc	Normal control room HVAC system, outside air duct downstream of filter unit	No	No	Gas	Off-line	**21**
CRVS	2	γ	MCR supply air duct (iodine)	I-131	3E-10 to 5E-8 µCi / cc	Normal control room HVAC system, outside air duct downstream of filter unit	No	No	Gas	Off-line	**22**

CRVS	2	B	MCR supply air duct(noble gas)	Kr-85Xe-133	3E-7 to 1E-2 µCi/cc	Normal control roomHVAC system, outside air duct downstream of filter unit	No	No	Gas	Off-line	**23**
DWS	1	γ	North Reactor Building services header	Cs-137	1E-7 to 1E-2 µCi/ml	North Reactor Building, DWS service lines	No	No	Liquid	Adjacent-to-line	**24**
DWS	1	γ	South Reactor Building services header	Cs-137	1E-7 to 1E-2 µCi/ml	South Reactor Building, DWS service lines	No	No	Liquid	Adjacent-to-line	**25**
GRW	1	B	GRW common discharge line to HVAC exhaust	Kr-85 Xe-133	3E-7 to 1E-2 µCi/cc	Common discharge line from GRW to HVAC exhaust	No	No	Gas	Off-line	**26**
GRW	2	B	GRW decay beds discharge lines	Kr-85 Xe-133	3E-7 to 1E-2 µCi/cc	Downstream of decay beds discharge line to HVAC exhaust	No	No	Gas	Off-line	**27**
LRW	2	γ	LRW discharge to environment	Cs-137	1E-7 to 1E-2 µCi/ml	LRW effluent discharge line to environment	No	No	Liquid	Adjacent-to-line	**28**
MSS	24	γ	MSS main steam line A	Ar-41	3.E-3 to 1E+1 µCi/cc	Main steam line A	No	No	Gas	Adjacent to-line	**29**
MSS	24	γ	MSS main steam line B	Ar-41	3.E-3 to 1E+1 µCi/cc	Main steam line B	No	No	Gas	Adjacent to-line	**30**
PSCS	1	B	Pool surge control system	Kr-85 Xe-133	3E-7 to 1E-2 µCi / cc	Pool surge control storage tank vent line	No	No	Gas	Off-line	**31**

RBVS	3	B	Spent fuel pool ventilation exhaust (particulate)	Cs-137	3E-10 to 1E-6 µCi / cc	RBVS spent fuel pool and refuel dock exhaust air	No	No	Gas	Off-line (PING)	**32**
RBVS	3	γ	Spent fuel pool ventilation exhaust (iodine)	I-131	3E-10 to 5E-8 µCi / cc	RBVS spent fuel pool and refuel dock exhaust air	No	No	Gas	Off-line (PING)	**33**
RBVS	3	B	Spent fuel pool ventilation exhaust (noble gas)	Kr-85 Xe-133	3E-7 to 1.0E-2 µCi/cc	RBVS spent fuel pool and refuel dock exhaust air	No	No	Gas	Off-line (PING)	**34**
RBVS	1	γ	Reactor Building ventilation system (particulate)	Cs-137	3E-10 to 1E-6 µCi/cc	RBVS general area exhaust air	No	No	Gas	Off-line (PING)	**35**
RBVS	1	γ	Reactor Building ventilation system (iodine)	I-131	3E-10 to 5E-8 µCi / cc	RBVS general area exhaust air	No	No	Gas	Off-line (PING)	**36**
RBVS	1	B	Plant vent particulate	Cs-137	1E-7 to 1E-2 µCi/cc	Plant exhaust stack	Yes	No	Gas	Off-line (PING)	**37**
RBVS	1	γ	Plant vent iodine	I-131	3E-10 to 1E-6 µCi/cc	Plant exhaust stack	Yes	No	Gas	Off-line (PING)	**38**
RBVS	1	B	Plant vent noble gas (normal range)	Kr-85 Xe-133	3E-7 to 1E-2 µCi/cc	Plant exhaust stack	Yes	No	Gas	Off-line (PING)	**39**
RBVS	1	B/γ	Plant vent extended range gas (accident mid- range)	Kr-85 Xe-133	3E-7 to 1E+4 µCi/cc	Plant exhaust stack	Yes	No	Gas	Off-line (PING)	**40**

RBVS	1	B/γ	Plant vent extended range gas (accident high range)	Kr-85 Xe-133	3E-7 to 1E+4 µCi/cc	Plant exhaust stack	Yes	No	Gas	Off-line (PING)	**41**
RWBVS	1	γ	Radioactive Waste Building ventilation system (particulate)	Cs-137	3E-10 to 1E-6 µCi/cc	RWBVS exhaust air particulate	No	No	Gas	Off-line (PING)	**42**
RWBVS	1	γ	Radioactive Waste Building ventilation system (iodine)	I-131	3E-10 to 5E-8 µCi / cc	RWBVS exhaust air iodine	No	No	Gas	Off-line (PING)	**43**
RCCW	12	γ	RCCW return lines from CES condensers	Cs-137	1E-7 to 1E-2 µCi/ml	RCCW return lines from CES condensers	No	No	Liquid	Adjacent-to-line	**44**
RCCW	2414	γ	RCCW return lines from CVC NRHX and PSScoolers	Cs-137	1E-7 to 1E-2 µCi/ml	RCCW return lines from CVC NRHX and PSS coolers	No	No	Liquid	Adjacent-to-line	**45**
RWDS	1	γ	RCCWS water drained from the CVCS non-regenerative and RCCW HX	Cs-137	1E-7 to 1E-2 µCi/ml	RWDS tank-0020	No	No	Liquid	Adjacent-to-line	**46**
SCWS	1	γ	Site cooling water	Cs-137	1E-7 to 1E-2 µCi/ml	From cooling tower to UWS discharge basin blowdown line	No	No	Liquid	Off-line with sampling capability	**47**

SCWS	1	γ	Site cooling water	Cs-137	1E-7 to 1E-2 µCi/ml	From cooling tower to UWS discharge basin overflow line	No	No	Liquid	Adjacent-to-line	**48**
SCWS	3	γ	SCW reactor pool cooling HXs return lines	Cs-137	1E-7 to 1E-2 µCi/ml	SCW reactor pool cooling HXs return lines prior to entering the main header	No	No	Liquid	Off-line	**49**
SCWS	2	γ	SCW spent fuel pool cooling HX return lines	Cs-137	1E-7 to 1E-2 µCi/ml	SCW spent fuel pool cooling HX return lines	No	No	Liquid	Off-line	**50**
SCWS	4	γ	SCW RCCW return lines	Cs-137	1E-7 to 1E-2 µCi/ml	SCW RCCW return lines	No	No	Liquid	Off-line	**51**
TGSS	2	γ	Turbine gland sealing system skid exhaust common vent, Turbine Building	Ar-41	3.E-3 to 1E-1 µCi/cc	Turbine generator skid common exhaust vent point Ar-41	No	No	Gas	Adjacent-to-line	**52**
TGSS	2	γ	Turbine gland sealing system skid exhaust common vent, Turbine Building	I-131	3E-10 to 5E-8 µCi / cc	Turbine generator skid common exhaust vent point Iodine	No	No	Gas	Off-line (PING)	**53**
TGSS	2	B	Turbine gland sealing system skid exhaust common vent, Turbine Building	Kr-85 Xe-133	3E-7 to 1.0E-2 µCi/cc	Turbine generator skid common exhaust vent point skid (NG)	No	No	Gas	Off-line (PING)	**54**

TGSS	2	γ	Turbine gland sealing system skid, exhaust common vent Turbine Building	Cs-137	3E-10 to 1E-6 µCi/cc	Turbine generator skid common exhaust vent point particulate	No	No	Gas	Off-line (PING)	**55**
UWS	1	γ	Utility Water system	Cs-137	1E-7 to 1E-2 µCi/ml	Utility water system effluent path	No	No	Liquid	Off-line with sampling capability	**56**

Supplemented Table 12.3-11: Fixed Airborne Radiation Monitors						
Building and Elevation	**Area**	**Detector Quantity / Type**	**Principal Parameter Measured**	**Nominal Range**	**PAM / Type**	**ID #**
Reactor Building elevation 24’	Degasifier room A	1 / Noble gas	Kr-85, Xe-133: ß	3E-4 to 1E+3 µCi/cc	No	**57**
Reactor Building elevation 24’	Degasifier room B	1 / Noble gas	Kr-85, Xe-133: ß	3E-4 to 1E+3 µCi/cc	No	**58**
Reactor Building elevation 50’	Hot lab	1 / Particulate	Cs-137: g	3E-10 to 1E-6 µCi/cc	Yes / E	**59**
Annex Building elevation 100’	Hot shop	1 / Particulate	Cs-137: g	3E-10 to 1E-6 µCi/cc	No	**60**
Annex Building elevation 100’	Decontamination shop	1 / Particulate	Cs-137: g	3E-10 to 1E-6 µCi/cc	No	**61**
Radioactive Waste Building elevation 71’	Gaseous radioactive waste process tank area	1 / Noble gas 1 / Particulate 1 / Iodine	Kr-85, Xe-133: ß Cs-137: g I-131: g	3E-7 to 1E-2 µCi/cc 3E-10 to 1E-6 µCi/cc 3E-10 to 5E-8 µCi/cc	No	**62**

Supplemented Table 12.3-12: Fixed Area Radiation Monitors						
Building and Elevation	**Area**	**Detector Quantity / Type**	**Principal Parameter Measured**	**Nominal Range**	**PAM / Type**	**ID #**
Reactor Building elevation 24’	NW stairwell	1 / gamma-sensitive	gamma y	1E-4 to 1E+4 rem/hr	No	**63**
Reactor Building elevation 24’	NW vestibule	1 / gamma-sensitive	gamma y	1E-4 to 1E+4 rem/hr	No	**64**
Reactor Building elevation 24’	NW passageway	1 / gamma-sensitive	gamma y	1E-4 to 1E+4 rem/hr	No	**65**
Reactor Building elevation 24’	West passageway	1 / gamma-sensitive	gamma y	1E-4 to 1E+4 rem/hr	No	**66**
Reactor Building elevation 24’	Pool cleanup filter rooms	2 / gamma-sensitive	gamma y	1E-4 to 1E+4 rem/hr	No	**67**
Reactor Building elevation 24’	Pool cleanup demineralizers	3 / gamma-sensitive	gamma y	1E-4 to 1E+4 rem/hr	No	**68**
Reactor Building elevation 24’	SW stairwell	1 / gamma-sensitive	gamma y	1E-4 to 1E+4 rem/hr	No	**69**
Reactor Building elevation 24’	SW vestibule	1 / gamma-sensitive	gamma y	1E-4 to 1E+4 rem/hr	No	**70**
Reactor Building elevation 24’	SW passageway	1 / gamma-sensitive	gamma y	1E-4 to 1E+4 rem/hr	No	**71**
Reactor Building elevation 24’	NE passageway	1 / gamma-sensitive	gamma y	1E-4 to 1E+4 rem/hr	No	**72**
Reactor Building elevation 24’	SE passageway	1 / gamma-sensitive	gamma y	1E-4 to 1E+4 rem/hr	No	**73**
Reactor Building elevation 24’	NE stairwell	1 / gamma-sensitive	gamma y	1E-4 to 1E+4 rem/hr	No	**74**

Supplemented Table 12.3-12: Fixed Area Radiation Monitors						
Building and Elevation	**Area**	**Detector Quantity / Type**	**Principal Parameter Measured**	**Nominal Range**	**PAM / Type**	**ID #**
Reactor Building elevation 24’	NE vestibule	1 / gamma-sensitive	gamma y	1E-4 to 1E+4 rem/hr	No	**75**
Reactor Building elevation 24’	East passageway	1 / gamma-sensitive	gamma y	1E-4 to 1E+4 rem/hr	No	**76**
Reactor Building elevation 24’	SE stairwell	1 / gamma-sensitive	gamma y	1E-4 to 1E+4 rem/hr	No	**77**
Reactor Building elevation 24’	SE vestibule	1 / gamma-sensitive	gamma y	1E-4 to 1E+4 rem/hr	No	**78**
Reactor Building elevation 24’	CVCS ion exchanger proximity (serve the CVCS reactor coolant filters)	12 / gamma-sensitive	gamma y	1E-4 to 1E+4 rem/hr	No	**79**
Reactor Building elevation 35’-8”	CVCS pump rooms	12 / gamma-sensitive	gamma y	1E-4 to 1E+4 rem/hr	No	**80**
Reactor Building elevation 50’	NW stairwell	1 / gamma-sensitive	gamma y	1E-4 to 1E+4 rem/hr	No	**81**
Reactor Building elevation 50’	NW vestibule	1 / gamma-sensitive	gamma y	1E-4 to 1E+4 rem/hr	No	**82**
Reactor Building elevation 50’	West passageway	1 / gamma-sensitive	gamma y	1E-4 to 1E+4 rem/hr	No	**83**
Reactor Building elevation 50’	SW stairwell	1 / gamma-sensitive	gamma y	1E-4 to 1E+4 rem/hr	No	**84**
Reactor Building elevation 50’	SW vestibule	1 / gamma-sensitive	gamma y	1E-4 to 1E+4 rem/hr	No	**85**

Supplemented Table 12.3-12: Fixed Area Radiation Monitors						
Building and Elevation	**Area**	**Detector Quantity / Type**	**Principal Parameter Measured**	**Nominal Range**	**PAM / Type**	**ID #**
Reactor Building elevation 50’	SW passageway	1 / gamma-sensitive	gamma y	1E-4 to 1E+4 rem/hr	No	**86**
Reactor Building elevation 50’	NW passageway	1 / gamma-sensitive	gamma y	1E-4 to 1E+4 rem/hr	No	**87**
Reactor Building elevation 50’	NE passageway	1 / gamma-sensitive	gamma y	1E-4 to 1E+4 rem/hr	Yes / E	**88**
Reactor Building elevation 50’	CVCS heat exchanger rooms	12 / gamma-sensitive	gamma y	1E-4 to 1E+4 rem/hr	No	**89**
Reactor Building elevation 50’	NE stairwell	1 / gamma-sensitive	gamma y	1E-4 to 1E+4 rem/hr	Yes / E	**90**
Reactor Building elevation 50’	NE vestibule	1 / gamma-sensitive	gamma y	1E-4 to 1E+4 rem/hr	Yes / E	**91**
Reactor Building elevation 50’	East passageway	1 / gamma-sensitive	gamma y	1E-4 to 1E+4 rem/hr	Yes / E	**92**
Reactor Building elevation 50’	Hot lab	1 / gamma-sensitive	gamma y	1E-4 to 1E+4 rem/hr	Yes / E	**93**
Reactor Building elevation 50’	SE stairwell	1 / gamma-sensitive	gamma y	1E-4 to 1E+4 rem/hr	Yes / E	**94**
Reactor Building elevation 50’	SE vestibule	1 / gamma-sensitive	gamma y	1E-4 to 1E+4 rem/hr	Yes / E	**95**
Reactor Building elevation 50’	SE passageway	1 / gamma-sensitive	gamma y	1E-4 to 1E+4 rem/hr	Yes / E	**96**
Reactor Building elevation 62’	NW vestibule	1 / gamma-sensitive	gamma y	1E-4 to 1E+4 rem/hr	No	**97**

Supplemented Table 12.3-12: Fixed Area Radiation Monitors						
Building and Elevation	**Area**	**Detector Quantity / Type**	**Principal Parameter Measured**	**Nominal Range**	**PAM / Type**	**ID #**
Reactor Building elevation 62’	West passageway	1 / gamma-sensitive	gamma y	1E-4 to 1E+4 rem/hr	No	**98**
Reactor Building elevation 62’	SW vestibule	1 / gamma-sensitive	gamma y	1E-4 to 1E+4 rem/hr	No	**99**
Reactor Building elevation 62’	SE vestibule	1 / gamma-sensitive	gamma y	1E-4 to 1E+4 rem/hr	No	**100**
Reactor Building elevation 62’	East passageway	1 / gamma-sensitive	gamma y	1E-4 to 1E+4 rem/hr	No	**101**
Reactor Building elevation 62’	NE vestibule	1 / gamma-sensitive	gamma y	1E-4 to 1E+4 rem/hr	No	**102**
Reactor Building elevation 62’	Module heatup system heat exchanger rooms	2 / gamma-sensitive	gamma y	1E-4 to 1E+4 rem/hr	No	**103**
Reactor Building elevation 75’	NW stairwell	1 / gamma-sensitive	gamma y	1E-4 to 1E+4 rem/hr	Yes / E	**104**
Reactor Building elevation 75’	NW vestibule	1 / gamma-sensitive	gamma y	1E-4 to 1E+4 rem/hr	Yes / E	**105**
Reactor Building elevation 75’	West passageway	1 / gamma-sensitive	gamma y	1E-4 to 1E+4 rem/hr	No	**106**
Reactor Building elevation 75’	SW stairwell	1 / gamma-sensitive	gamma y	1E-4 to 1E+4 rem/hr	Yes / E	**107**
Reactor Building elevation 75’	SW vestibule	1 / gamma-sensitive	gamma y	1E-4 to 1E+4 rem/hr	Yes / E	**108**
Reactor Building elevation 75’	Safety I&C and EDSS equipment rooms	4 / gamma-sensitive	gamma y	1E-4 to 1E+4 rem/hr	Yes / E	**109**

Supplemented Table 12.3-12: Fixed Area Radiation Monitors						
Building and Elevation	**Area**	**Detector Quantity / Type**	**Principal Parameter Measured**	**Nominal Range**	**PAM / Type**	**ID #**
Reactor Building elevation 75’	SE stairwell	1 / gamma-sensitive	gamma y	1E-4 to 1E+4 rem/hr	Yes / E	**110**
Reactor Building elevation 75’	SE vestibule	1 / gamma-sensitive	gamma y	1E-4 to 1E+4 rem/hr	Yes / E	**111**
Reactor Building elevation 75’	East passageway	1 / gamma-sensitive	gamma y	1E-4 to 1E+4 rem/hr	Yes / E	**112**
Reactor Building elevation 75’	NE stairwell	1 / gamma-sensitive	gamma y	1E-4 to 1E+4 rem/hr	Yes / E	**113**
Reactor Building elevation 75’	NE vestibule	1 / gamma-sensitive	gamma y	1E-4 to 1E+4 rem/hr	Yes / E	**114**
Reactor Building elevation 86’	NW stairwell	1 / gamma-sensitive	gamma y	1E-4 to 1E+4 rem/hr	Yes / E	**115**
Reactor Building elevation 86’	NW vestibule	1 / gamma-sensitive	gamma y	1E-4 to 1E+4 rem/hr	Yes / E	**116**
Reactor Building elevation 86’	Safety I&C and EDSS equipment rooms	4 / gamma-sensitive	gamma y	1E-4 to 1E+4 rem/hr	Yes / E	**117**
Reactor Building elevation 86’	NE stairwell	1 / gamma-sensitive	gamma y	1E-4 to 1E+4 rem/hr	Yes / E	**118**
Reactor Building elevation 86’	NE vestibule	1 / gamma-sensitive	gamma y	1E-4 to 1E+4 rem/hr	Yes / E	**119**
Reactor Building elevation 86’	SE stairwell	1 / gamma-sensitive	gamma y	1E-4 to 1E+4 rem/hr	Yes / E	**120**
Reactor Building elevation 86’	SE vestibule	1 / gamma-sensitive	gamma y	1E-4 to 1E+4 rem/hr	Yes / E	**121**
Reactor Building elevation 86’	SW stairwell	1 / gamma-sensitive	gamma y	1E-4 to 1E+4 rem/hr	Yes / E	**122**

Supplemented Table 12.3-12: Fixed Area Radiation Monitors						
Building and Elevation	**Area**	**Detector Quantity / Type**	**Principal Parameter Measured**	**Nominal Range**	**PAM / Type**	**ID #**
Reactor Building elevation 86’	SW vestibule	1 / gamma-sensitive	gamma y	1E-4 to 1E+4 rem/hr	Yes / E	**123**
Reactor Building elevation 100’	NW stairwell	1 / gamma-sensitive	gamma y	1E-4 to 1E+4 rem/hr	Yes / E	**124**
Reactor Building elevation 100’	NW refuel area floor	1 / gamma-sensitive	gamma y	1E-4 to 1E+4 rem/hr	No	**125**
Reactor Building elevation 100’	Spent fuel mast bridge (used during fuel movement)	1 / gamma-sensitive	gamma y	1E-4 to 1E+4 rem/hr	No	**126**
Reactor Building elevation 100’	SW stairwell	1 / gamma-sensitive	gamma y	1E-4 to 1E+4 rem/hr	Yes / E	**127**
Reactor Building elevation 100’	SW vestibule	1 / gamma-sensitive	gamma y	1E-4 to 1E+4 rem/hr	No	**128**
Reactor Building elevation 100’	NE stairwell	1 / gamma-sensitive	gamma y	1E-4 to 1E+4 rem/hr	Yes / E	**129**
Reactor Building elevation 100’	NE vestibule	1 / gamma-sensitive	gamma y	1E-4 to 1E+4 rem/hr	No	**130**
Reactor Building elevation 100’	SE stairwell	1 / gamma-sensitive	gamma y	1E-4 to 1E+4 rem/hr	Yes / E	**131**
Reactor Building elevation 100’	SE vestibule	1 / gamma-sensitive	gamma y	1E-4 to 1E+4 rem/hr	No	**132**
Reactor Building elevation 100’	East passageway	1 / gamma-sensitive	gamma y	1E-4 to 1E+4 rem/hr	Yes / E	**133**
Reactor Building elevation 100’	NE passageway	1 / gamma-sensitive	gamma y	1E-4 to 1E+4 rem/hr	Yes / E	**134**
Reactor Building elevation 100’	SE passageway	1 / gamma-sensitive	gamma y	1E-4 to 1E+4 rem/hr	Yes / E	**135**

Supplemented Table 12.3-12: Fixed Area Radiation Monitors						
Building and Elevation	**Area**	**Detector Quantity / Type**	**Principal Parameter Measured**	**Nominal Range**	**PAM / Type**	**ID #**
Reactor Building elevation 100’	SW refuel area floor	1 / gamma-sensitive	gamma y	1E-4 to 1E+4 rem/hr	No	**136**
Reactor Building elevation 100’	Inside bioshield monitor	24 / gamma-sensitive	gamma y	1E0 to 1E+7 rem/hr	Yes / B & C	**137**
Reactor Building elevation 126’	NW stairwell	1 / gamma-sensitive	gamma y	1E-4 to 1E+4 rem/hr	No	**138**
Reactor Building elevation 126’	NW vestibule	1 / gamma-sensitive	gamma y	1E-4 to 1E+4 rem/hr	No	**139**
Reactor Building elevation 126’	SW stairwell	1 / gamma-sensitive	gamma y	1E-4 to 1E+4 rem/hr	No	**140**
Reactor Building elevation 126’	SW vestibule	1 / gamma-sensitive	gamma y	1E-4 to 1E+4 rem/hr	No	**141**
Reactor Building elevation 126’	NE stairwell	1 / gamma-sensitive	gamma y	1E-4 to 1E+4 rem/hr	No	**142**
Reactor Building elevation 126’	NE vestibule	1 / gamma-sensitive	gamma y	1E-4 to 1E+4 rem/hr	No	**143**
Reactor Building elevation 126’	SE stairwell	1 / gamma-sensitive	gamma y	1E-4 to 1E+4 rem/hr	No	**144**
Reactor Building elevation 126’	SE vestibule	1 / gamma-sensitive	gamma y	1E-4 to 1E+4 rem/hr	No	**145**
Reactor Building elevation 126’	NW passageway	1 / gamma-sensitive	gamma y	1E-4 to 1E+4 rem/hr	No	**146**
Reactor Building elevation 126’	NE passageway	1 / gamma-sensitive	gamma y	1E-4 to 1E+4 rem/hr	No	**147**
Reactor Building elevation 126’	SW passageway	1 / gamma-sensitive	gamma y	1E-4 to 1E+4 rem/hr	No	**148**
Reactor Building elevation 126’	SE passageway	1 / gamma-sensitive	gamma y	1E-4 to 1E+4 rem/hr	No	**149**

Supplemented Table 12.3-12: Fixed Area Radiation Monitors						
Building and Elevation	**Area**	**Detector Quantity / Type**	**Principal Parameter Measured**	**Nominal Range**	**PAM / Type**	**ID #**
Reactor Building elevation 126’	Spent fuel pool area	2 / gamma-sensitive	gamma y	1E-4 to 1E+4 rem/hr	No	**150**
Reactor Building elevation 126’	Reactor pool monitor	10 / gamma-sensitive	gamma y	1E0 to 1E+7 rem/hr	No	**151**
Control Building elevation 50’	North entrance space	1 / gamma-sensitive	gamma y	1E-4 to 1E+4 rem/hr	No	**152**
Control Building elevation 50’	South entrance space	1 / gamma-sensitive	gamma y	1E-4 to 1E+4 rem/hr	No	**153**
Control Building elevation 50’	South bottle storage room	1 / gamma-sensitive	gamma y	1E-4 to 1E+4 rem/hr	No	**154**
Control Building elevation 50’	Entrance bottle storage room	1 / gamma-sensitive	gamma y	1E-4 to 1E+4 rem/hr	No	**155**
Control Building elevation 50’	North bottle storage room	1 / gamma-sensitive	gamma y	1E-4 to 1E+4 rem/hr	No	**156**
Control Building elevation 50’	Central stairwell	1 / gamma-sensitive	gamma y	1E-4 to 1E+4 rem/hr	No	**157**
Control Building elevation 50’	North stairwell	1 / gamma-sensitive	gamma y	1E-4 to 1E+4 rem/hr	No	**158**
Control Building elevation 50’	South stairwell	1 / gamma-sensitive	gamma y	1E-4 to 1E+4 rem/hr	No	**159**
Control Building elevation 76'-6"	Reactor Building access tunnel	1 / gamma-sensitive	gamma y	1E-4 to 1E+4 rem/hr	Yes / E	**160**
Control Building elevation 76'-6"	South stairwell	1 / gamma-sensitive	gamma y	1E-4 to 1E+4 rem/hr	No	**161**
Control Building elevation 76'-6"	Main control room envelope	1 / gamma-sensitive	gamma y	1E-4 to 1E+4 rem/hr	Yes / E	**162**
Control Building elevation 100’	Technical support center	1 / gamma-sensitive	gamma y	1E-4 to 1E+4 rem/hr	Yes / E	**163**

Supplemented Table 12.3-12: Fixed Area Radiation Monitors						
Building and Elevation	**Area**	**Detector Quantity / Type**	**Principal Parameter Measured**	**Nominal Range**	**PAM / Type**	**ID #**
Control Building elevation 100’	Technical support center hallway	1 / gamma-sensitive	gamma y	1E-4 to 1E+4 rem/hr	Yes / E	**164**
Control Building elevation 100’	North stairwell	1 / gamma-sensitive	gamma y	1E-4 to 1E+4 rem/hr	No	**165**
Control Building elevation 100’	South stairwell	1 / gamma-sensitive	gamma y	1E-4 to 1E+4 rem/hr	No	**166**
Control Building elevation 120’	Central area	1 / gamma-sensitive	gamma y	1E-4 to 1E+4 rem/hr	No	**167**
Control Building elevation 120’	North stairwell	1 / gamma-sensitive	gamma y	1E-4 to 1E+4 rem/hr	No	**168**
Control Building elevation 120’	South stairwell	1 / gamma-sensitive	gamma y	1E-4 to 1E+4 rem/hr	No	**169**
Annex Building elevation 100’	Entry and exit vestibule	1 / gamma-sensitive	gamma y	1E-4 to 1E+4 rem/hr	No	**170**
Annex Building elevation 100’	Hot workshop	1 / gamma-sensitive	gamma y	1E-5 to 1E+4 rem/hr	No	**171**
Annex Building elevation 100’	Exit turnstiles	1 / gamma-sensitive	gamma y	1E-5 to 1E+4 rem/hr	No	**172**
Annex Building elevation 100’	Connector to RXB and RWB	1 / gamma-sensitive	gamma y	1E-5 to 1E+4 rem/hr	No	**173**
Radioactive Waste Building elevation 71’	NE stairwell	1 / gamma-sensitive	gamma y	1E-4 to 1E+4 rem/hr	No	**174**
Radioactive Waste Building elevation 71’	SW stairwell	1 / gamma-sensitive	gamma y	1E-4 to 1E+4 rem/hr	No	**175**
Radioactive Waste Building elevation 71’	SW passageway	1 / gamma-sensitive	gamma y	1E-4 to 1E+4 rem/hr	No	**176**
Radioactive Waste Building elevation 71’	SE passageway	1 / gamma-sensitive	gamma y	1E-4 to 1E+4 rem/hr	No	**177**

Supplemented Table 12.3-12: Fixed Area Radiation Monitors						
Building and Elevation	**Area**	**Detector Quantity / Type**	**Principal Parameter Measured**	**Nominal Range**	**PAM / Type**	**ID #**
Radioactive Waste Building elevation 71’	Telecom room area	1 / gamma-sensitive	gamma y	1E-4 to 1E+4 rem/hr	No	**178**
Radioactive Waste Building elevation 71’	LRWS storage tank pump rooms	4 / gamma-sensitive	gamma y	1E-4 to 1E+4 rem/hr	No	**179**
Radioactive Waste Building elevation 71’	SRWS storage tank pump rooms.	2 / gamma-sensitive	gamma y	1E-4 to 1E+4 rem/hr	No	**180**
Radioactive Waste Building elevation 71’	GRWS heat exchanger room	1 / gamma-sensitive	gamma y	1E-4 to 1E+4 rem/hr	No	**181**
Radioactive Waste Building elevation 71’	GRWS vessel tank room	2 / gamma-sensitive	gamma y	1E-4 to 1E+4 rem/hr	No	**182**
Radioactive Waste Building elevation 71’	Waste drum storage room	1 / gamma-sensitive	gamma y	1E-4 to 1E+4 rem/hr	No	**183**
Radioactive Waste Building elevation 82’	LRWS storage tank rooms	8 / gamma-sensitive	gamma y	1E-4 to 1E+4 rem/hr	No	**184**
Radioactive Waste Building elevation 82’	SRWS storage tank rooms	4 / gamma-sensitive	gamma y	1E-4 to 1E+4 rem/hr	No	**185**
Radioactive Waste Building elevation 100’	Truck bay	1 / gamma-sensitive	gamma y	1E-4 to 1E+4 rem/hr	No	**186**
Radioactive Waste Building elevation 100’	SW stairwell	1 / gamma-sensitive	gamma y	1E-4 to 1E+4 rem/hr	No	**187**
Radioactive Waste Building elevation 100’	NE stairwell	1 / gamma-sensitive	gamma y	1E-4 to 1E+4 rem/hr	No	**188**
Radioactive Waste Building elevation 100’	Waste management control room	1 / gamma-sensitive	gamma y	1E-5 to 1E+4 rem/hr	No	**189**
Radioactive Waste Building elevation 100’	NE passageway	1 / gamma-sensitive	gamma y	1E-4 to 1E+4 rem/hr	No	**190**
Radioactive Waste Building elevation 100’	East rollup door area	1 / gamma-sensitive	gamma y	1E-4 to 1E+4 rem/hr	No	**191**

Supplemented Table 12.3-12: Fixed Area Radiation Monitors						
Building and Elevation	**Area**	**Detector Quantity / Type**	**Principal Parameter Measured**	**Nominal Range**	**PAM / Type**	**ID #**
Radioactive Waste Building elevation 100’	LRWS skids area	1 / gamma-sensitive	gamma y	1E-4 to 1E+4 rem/hr	No	**192**
Radioactive Waste Building elevation 100’	HIC tank rooms storage area	3 / gamma-sensitive	gamma y	1E-4 to 1E+4 rem/hr	No	**193**
Turbine Building elevation 100’	General area	2 / gamma-sensitive	gamma y	1E-4 to 1E+4 rem/hr	No	**194**

Key to Radiation Monitors in DCA Part 2 – Tier 1		
Section/Location	**Context**	**Rad Mon ID #**
2.3.1	RCS leak detection monitoring capability.	13, 14, 15, 16, 17
Table 2.5-5	bioshield area radiation monitor	137
2.7.1	The containment evacuation system (CES) automatically responds to a high radiation signal from CES-RT-1011	14, 15, 16
2.7.1	The chemical and volume control system (CVCS) automatically responds to a high radiation signal from CVC-RT-3016	12
2.7.1	The CVCS automatically responds to a high radiation signal from 6A-AB-RT-0142	1, 2
2.7.1	The CVCS automatically responds to a high radiation signal from 6B-AB-RT-0141	1, 2
Table 2.7-1	CES-RT-1011	14, 15, 16
Table 2.7-1	CVC-RT-3016	12
Table 2.7-1	6A-AB-RT-0142	1, 2
Table 2.7-1	6B-AB-RT-0141	1, 2
Table 2.7-2	CES-RT-1011	14, 15, 16
Table 2.7-2	CVC-RT-3016	12
Table 2.7-2	6A-AB-RT-0142	1, 2
Table 2.7-2	6B-AB-RT-0141	1, 2
3.9.1	00-CRV-RT-0503	20
3.9.1	00-CRV-RT-0504	20
3.9.1	00-CRV-RT-0505	20
3.9.1	00-CRV-RT-0510	21, 22, 23
3.9.1	00-CRV-RT-0511	21, 22, 23
3.9.1	00-RBV-RE-0510	32, 33, 34
3.9.1	00-RBV-RE-0511	32, 33, 34
3.9.1	00-RBV-RE-0512	32, 33, 34
3.9.1	00-GRW-RIT-0046	27
3.9.1	00-GRW-RIT-0060	27
3.9.1	00-GRW-RIT-0071	26
3.9.1	00-LRW-RIT-0569	28
3.9.1	00-LRW-RIT-0571	28
3.9.1	00-AB-RT-0153	3
3.9.1	00-AB-RT-0166	4
3.9.1	00-PSC-RE-1003	31
Table 3.9-1	00-CRV-RT-0503	20
Table 3.9-1	00-CRV-RT-0504	20
Table 3.9-1	00-CRV-RT-0505	20
Table 3.9-1	00-CRV-RT-0510	21, 22, 23
Table 3.9-1	00-CRV-RT-0511	21, 22, 23
Table 3.9-1	00-RBV-RE-0510	32, 33, 34
Table 3.9-1	00-RBV-RE-0511	32, 33, 34
Table 3.9-1	00-RBV-RE-0512	32, 33, 34
Table 3.9-1	00-GRW-RIT-0046	27
Table 3.9-1	00-GRW-RIT-0060	27
Table 3.9-1	00-GRW-RIT-0071	26
Table 3.9-1	00-LRW-RIT-0569	28
Table 3.9-1	00-LRW-RIT-0571	28

Key to Radiation Monitors in DCA Part 2 – Tier 1		
Section/Location	**Context**	**Rad Mon ID #**
Table 3.9-1	00-AB-RT-0153	3
Table 3.9-1	00-AB-RT-0166	4
Table 3.9-1	00-PSC-RE-1003	31
Table 3.9-2	00-CRV-RT-0503	20
Table 3.9-2	00-CRV-RT-0504	20
Table 3.9-2	00-CRV-RT-0505	20
Table 3.9-2	00-CRV-RT-0510	21, 22, 23
Table 3.9-2	00-CRV-RT-0511	21, 22, 23
Table 3.9-2	00-RBV-RE-0510	32, 33, 34
Table 3.9-2	00-RBV-RE-0511	32, 33, 34
Table 3.9-2	00-RBV-RE-0512	32, 33, 34
Table 3.9-2	00-GRW-RIT-0046	27
Table 3.9-2	00-GRW-RIT-0060	27
Table 3.9-2	00-GRW-RIT-0071	26
Table 3.9-2	00-LRW-RIT-0569	28
Table 3.9-2	00-LRW-RIT-0571	28
Table 3.9-2	00-AB-RT-0153	3
Table 3.9-2	00-AB-RT-0166	4
Table 3.9-2	00-PSC-RE-1003	31
Table 3.14-1	Radiation monitoring that monitor post-accident monitoring B & C variables	137
3.17.1	6A-CFD-RT-1007	18
3.17.1	6A-BPD-RIT-0552	6
3.17.1	6A-BPD-RIT-0529	6
3.17.1	6A-BPD-RIT-0705	7
Table 3.17-1	6A-CFD-RT-1007	18
Table 3.17-1	6A-BPD-RIT-0552	6
Table 3.17-1	6A-BPD-RIT-0529	6
Table 3.17-1	6A-BPD-RIT-0705	7
Table 3.17-2	6A-CFD-RT-1007	18
Table 3.17-2	6A-BPD-RIT-0552	6
Table 3.17-2	6A-BPD-RIT-0529	6
Table 3.17-2	6A-BPD-RIT-0705	7
3.18.1	6B-CFD-RT-1007	18
3.18.1	6B-BPD-RIT-0551	6
3.18.1	6B-BPD-RIT-0530	6
Table 3.18-1	6B-CFD-RT-1007	18
Table 3.18-1	6B-BPD-RIT-0551	6
Table 3.18-1	6B-BPD-RIT-0530	6
Table 3.18-2	6B-CFD-RT-1007	18
Table 3.18-2	6B-BPD-RIT-0551	6
Table 3.18-2	6B-BPD-RIT-0530	6

Key to Radiation Monitors in DCA Part 2 – Tier 2 (FSAR)		
Section/Location	**Context**	**Rad Mon ID #**
LIST OF FIGURES	Exhaust Stack Effluent Radiation Monitor	37, 38, 39, 40, 41
Table 1.8-2	CES off-line radiation monitor to obtain reactor coolant and containment atmosphere samples.	14, 15, 16
Table 1.9-2	operation. Finally, radiation detectors in the CES condenser vent line provide an early indication	13, 14, 15, 16, 17
3.1.2.10	detectors, and radiation detectors are provided in the outside air duct, upstream of both	20
3.1.6.4	water level instruments. Radiation monitoring equipment is provided to detect excessive radiation levels and	150, 151
3.1.6.5	Radioactivity levels contained in the facility effluent and discharge paths	8, 9, 10, 11, 28, 37, 38, 39, 40, 41, 53, 54, 55, 56
Table 3.2-1	Discharge Line Radioactivity Transmitter	12
Table 3.2-1	the MCR . Radiation Monitors (Downstream of charcoal filter unit) Outside Air intake	21, 22, 23
Table 3.2-1	up to the radiation monitors downstream of the filter unit CRB B2 None AQ-	21, 22, 23
Table 3.2-1	Radiation Monitors (upstream of charcoal filter unit) CRB B2 None	20
Table 3.2-1	CES, Radiation Monitor RXB B2 None	13, 14, 15, 16, 17
Table 3.2-1	Sample Vessel Radiation Transmitter	17
Table 3.2-1	Gas Discharge Radiation Transmitter	13, 14, 15, 16
Table 3.2-1	CFDS, Radiation Transmitter	18
Table 3.2-1	Radioactivity Transmitters for: • RCCW CE Vacuum Pumps and Condensers • RCCW CVC NRHXs and PSS Coolers • RCCW PSS Cooling Water TCU	 44 45
Table 3.2-1	Main Steam Radiation Monitors RXB	29, 30
Table 3.2-1	ABS, Radioactivity Instruments	1, 2, 3, 4
Table 3.2-1	CARS, Effluent Radiation Element / Transmitter	8, 9, 10, 11
Table 3.2-1	Gland Seal Exhauster Radiation Monitor TGB	52, 53, 54, 55
Table 3.2-1	SCWS, Letdown line rad monitor Yard B2	47, 48
Table 3.2-1	UWS, Letdown Line Rad Monitor RWB B2	56
Table 3.2-1	RMS, Radiation monitors that monitors Type E variables	88, 90, 91, 92, 93, 94, 95, 96, 104, 105, 107, 108, 109, 110, 111, 112, 113, 114, 115, 116, 117, 118, 119, 120, 121, 122, 123, 124, 127, 129, 131, 133, 134, 135, 160, 162, 163, 164
Table 3.2-1	Area airborne radiation monitors that monitors Type E Variable	59
Table 3.2-1	Area airborne radiation monitors in: . Annex Building . Radioactive Waste Building .	57, 58, 59, 60, 61, 62
Table 3.2-1	RM system that monitors PAM B & C variables	137
Table 3.11-1	RM system that monitors PAM B & C variables	137

Key to Radiation Monitors in DCA Part 2 – Tier 2 (FSAR)		
Section/Location	**Context**	**Rad Mon ID #**
4.2.4.5	The chemical and volume control system (Section 9.3.4) contains radiation detection instrumentation that continuously monitors for radioactivity and is capable of detecting a fuel leak	12
5.2.5.1	CES sample vessel where it is monitored using pressure, temperature and radioactivity instrumentation.	17
5.2.5.1	Additionally, CES gaseous discharge radioactivity monitoring may detect a fuel leak or excessive RCS leakage.	13, 14, 15, 16
5.2.5.6	In the event radioactivity is introduced into the RCCWS piping, radiation elements and transmitters located downstream	44, 45
5.2.5.7	Radiation monitoring of the gaseous effluent from the condenser air removal	8, 9, 10, 11
5.2.5.7	to secondary leakage. Radiation monitoring is also provided on the main steam lines condenser	8, 9, 10, 11, 29, 30, 52, 53, 54, 55
6.4	radiation monitoring (see Section 9.4.1 and Section 11.5)	21, 22, 23
6.4.4	The CRVS has radiation monitors, toxic gas monitors, and smoke detectors located in the	20
6.4.4	unit, the CRVS radiation monitors generate a signal that results in isolation of the	21, 22, 23
7 - LIST OF FIGURES	Plant Protection System Radiation Monitors and Actuation Logic	21, 22, 23
7.0.4.1.4	solenoids, RM bioshield radiation monitors, and the EDSS battery monitors. If two out of	137
7.1.1.2.2	inside bioshield area radiation monitor.	137
7.1.1.2.2	inside the bioshield radiation monitor are the variables related to monitoring of the fuel	137
7.1.1.2.2	inside bioshield area radiation monitor is the primary method used to assess the extent	137
7.1.1.2.2	inside bioshield area radiation monitor.	137
Table 7.1-2	Inside Bioshield Area Radiation Monitor	137
Table 7.1-7	Inside Bioshield Area Radiation Monitor MPS	137
Table 7.1-7	Reactor Building Plant Exhaust Stack - Noble Gas Activity	39, 40, 41
Table 7.1-7	Reactor Building Plant Exhaust Stack - Particulates And Halogens	37, 38
Table 7.1-7	Hot Lab - Area Radioactivity	93
Table 7.1-7	Primary Sampling System Equipment - Area Radioactivity	88, 96
Table 7.1-7	Containment Sampling System Equipment - Area Radioactivity	133
Table 7.1-7	EDSS Switchgear Rooms - Area Radioactivity	109, 117
Table 7.1-7	Safety Instrument Rooms - Area Radioactivity	109, 117
Table 7.1-7	Reactor Building Access Tunnel - Area Radioactivity	160

Key to Radiation Monitors in DCA Part 2 – Tier 2 (FSAR)		
Section/Location	**Context**	**Rad Mon ID #**
Table 7.1-7	Technical Support Center - Control Support Area Radiation Level	163, 164
Table 7.1-7	Condenser Air Removal Vacuum Pump Exhaust - Noble Gases	11
Table 7.1-9	Inside bioshield area radiation monitor	137
Figure 7.1-2	INSIDE BIOSHIELD AREA RADIATION MONITOR TYPE B, TYPE C	137
8.3.2.2.1	reactor pool area radiation monitors. The battery chargers are sized to accommodate the monitor	137, 151
Table 8.3-4	CRVS air duct radiation monitor	20, 21, 22, 23
Table 8.3-4	reactor pool area radiation monitor #1	151
Table 8.3-4	reactor pool area radiation monitor #2	151
Table 8.3-5	RMS bioshield radiation monitor	137
Figure 8.3-6	CRVS AIR-DUCT RAD MONITOR	21, 22, 23
Figure 8.3-6	REACTOR POOL AREA RAD MONITORS	151
Figure 8.3-7a	BIOSHIELD RAD MONITOR	137
Figure 8.3-7b	BIOSHIELD RAD MONITOR	137
9.1.2.1	and local area radiation monitoring.	32, 33, 34, 150
9.1.2.3.6	Radiation monitors are provided in the SFP area to detect both	32, 33, 34, 150
9.1.3.1	PSCS, which provides radiation monitoring for a gaseous effluent discharge pathway for the pool	31
9.1.3.2	The fixed area radiation monitoring system provides monitors in the SFP area as described	150
9.1.3.2.4	The vent line on the pool surge control storage tank has a continuous air monitor with grab sample capabilities to monitor effluent releases from the tank.	31
9.1.3.2.4	the tank. The radiation monitoring and sampling equipment for the tank vent are described	31
9.1.3.3.2	exchanger tube failure, radiation monitors are provided on the piping at the outlet of	49, 50
9.1.3.3.6	and accident conditions. Radiation monitors are provided for detecting excessive radiation levels in the	32, 33, 34, 150
9.1.3.3.6	sumps for detection. Radiation monitors on the SCWS discharge lines from the SFPCS and	49, 50
9.1.3.3.7	PSCS storage tank. Radiation monitoring is described in Section 11.5.2.	31
9.2.2.1	The RCCWS design meets GDC 60 and GDC 64 as related to the control of radiological effluents and monitoring of releases.	44, 45
9.2.2.2.1	pump suction header. Radiation monitors are located downstream of the coolers, condensers and heat	44, 45
9.2.2.2.3	piping, in-line radiation monitors in the RCCWS piping will detect the radiation and	44, 45
9.2.2.2.3	CFR 20.1406. The radiation monitors are described in Section 11.5.	44, 45

Key to Radiation Monitors in DCA Part 2 – Tier 2 (FSAR)		
Section/Location	**Context**	**Rad Mon ID #**
9.2.2.3	the Reactor Building. Radiation monitors are located downstream of the cooled components to alert	44, 45
9.2.2.5	low-level switches. Radiation monitors are located downstream of RCCWS heat exchangers and will	44, 45
9.2.2.5	flow, and radiation detectors for heat exchangers	44, 45
9.2.4.5	main control room. Radiation monitors are included as part of the utility water system,	56
9.2.7.2.2	exchanger leakage. Radiation detectors are provided in the SCWS outlet of the reactor pool	49, 50, 51
9.2.7.3	SCWS design provides radiation monitoring and sampling to ensure the operators are alerted to	47, 48, 49, 50, 51
9.2.9.1	a liquid effluent radiation monitor for the purpose of monitoring the effluent discharge from	56
9.2.9.2	An off-line radiation monitor provides continuous indication of effluent parameters. An alarm is	56
9.2.9.2	discussion pertaining to radiation monitoring of the UWS discharge and Section 11.2 for a	56
9.2.9.3	An off-line radiation monitor with capability to take samples that are representative of	56
9.2.9.3	the off-line radiation monitor is indicative of an abnormal occurrence and operators are	56
9.3.2.2.1	off-line CES radiation monitor as described in Section 11.5. The analysis of grab	14, 15, 16
9.3.2.2.3	off-line CES radiation monitor as described in Section 11.5. Normal sample points of	14, 15, 16
9.3.2.2.3	temperature indication and radiation monitors located under the NPM bio-shields. Therefore, post-accident	137
9.3.2.2.3	off-line CES radiation monitor described in Section 11.5. The analysis of grab samples	14, 15, 16
9.3.2.2.3	CES off-line radiation monitor to obtain reactor coolant and containment atmosphere samples. SD-	14, 15, 16
9.3.2.3	In addition, a break in a sample line would result in activity release and a resulting actuation of area radiation monitors.	88, 91, 95, 96, 133, 134, 135
9.3.2.3	CES off-line radiation monitor to validate in-line monitor indication and serve as	14, 15, 16
9.3.2.3	The potential for radiological contamination from the PSS to interfacing nonradioactive systems is reduced by including radiation monitoring	45
9.3.2.3	minimized by providing radiation monitors in the RCCWS downstream of sample coolers to alert	45
Table 9.3.2-4	CES particulate, iodine, and noble gas radiation monitoring skid	14, 15, 16

Key to Radiation Monitors in DCA Part 2 – Tier 2 (FSAR)		
Section/Location	**Context**	**Rad Mon ID #**
9.3.3.2.1	are provided with radiation monitors that support automated system functions to terminate related sump	6, 7
9.3.3.2.1	thresholds. The BPDS radiation monitors and automated functions are discussed in Section 9.3.3.5.	6, 7
9.3.3.2.3	rate, the UWS radiation monitors are discussed in Section 11.5. Once started, continuous availability	56
9.3.3.2.3	The BPDS process radiation monitors provide continuous indication to the main and waste management	6, 7
9.3.3.2.3	automatically isolate. The radiation monitoring for the BPDS is discussed in Section 9.3.3.5. To	6, 7
9.3.3.2.3	chosen for the radiation monitor that is set sufficiently low to detect abnormal conditions	6, 7
9.3.3.3	and BPDS process radiation monitoring and automated functions described in Section 9.3.3.5 limit the	6, 7, 46
9.3.3.3	monitored by a radiation monitor located on the RCCWS drain tank as described in	46
9.3.3.3	if the related radiation monitor is not available. The normally non-contaminated liquid is	46
9.3.3.3	The BPDS inputs that could introduce radiologically contaminated liquids into the system are monitored for radiation as described in Section 9.3.3.5.	6, 7
9.3.3.5	BPDS radiation alarms are actuated in the MCR, locally, and in the WMCR.	6, 7
9.3.3.5	RCCWS drain tank radiation monitor provides continuous main control room indication and alarm capability.	46
9.3.3.5	control room. The radiation monitoring for the RWDS is discussed in Section 11.5. The	46
9.3.3.5	following BPDS process radiation monitoring instrumentation is provided for system inputs that have the	6, 7
9.3.3.5	adjacent-to-line radiation monitor is located on the line downstream of the ABS	7
9.3.3.5	single in-line radiation monitor is located on the north condensate regeneration skid drain	6
9.3.3.5	single in-line radiation monitor is located on the south condensate regeneration skid drain	6
9.3.3.5	single in-line radiation monitor is located on the north turbine generator building floor	6
9.3.3.5	single in-line radiation monitor is located on the south turbine generator building floor	6
9.3.3.5	The BPDS process radiation monitors provide continuous indication to the main and waste management	6, 7

Key to Radiation Monitors in DCA Part 2 – Tier 2 (FSAR)		
Section/Location	**Context**	**Rad Mon ID #**
9.3.3.5	automatically isolate. The radiation monitoring for the BPDS is discussed in Section 11.5. To	6, 7
9.3.3.5	chosen for the radiation monitor that is set as low as possible without causing	6, 7
9.3.4.1	The CVCS and MHS support the capability to monitor spaces (Section 12.3.4) containing components that contain radioactivity.	79, 80, 89, 103
9.3.4.2.3	A radiation monitor is located on each of the ABS exits from	1, 2
9.3.4.2.3	setpoint or if radiation monitor power is lost, the system initiates a control room	1, 2
9.3.4.2.3	heat exchanger. The radiation monitors associated with this automated system function are discussed in	1, 2
9.3.4.2.3	worker protection, a radiation monitor is provided on the CVCS suction line from the	12
9.3.4.2.3	power to the radiation monitor initiates closure of the normally open CVCS discharge process	12
9.3.4.2.3	PSS panel. The radiation monitors associated with this automated system function are discussed in	12
9.3.4.3	the RWDS. Area radiation monitors are provided in equipment rooms with CVCS or MHS	79, 80, 89, 103
9.3.4.3	and sampled. The radiation monitor is located upstream of the continuous sample line to	12
9.3.4.3	the ABS is equipped with radiation monitors.	1, 2, 3, 4
9.3.4.3	the CVCS/MHS supply and return isolation valves are closed automatically to stop leakage upon a high-high radiation signal from ABS.	1, 2, 3
9.3.4.3	Area radiation monitors are provided for rooms containing CVCS equipment which are	79, 80, 89
9.3.4.3	a process radiation detector to monitor the incoming reactor coolant to be processed and	12
9.3.6	iodine, and gaseous radiation monitor, as described in Section 9.3.2.	14, 15, 16
9.3.6.1	to the GRWS, where they are contained, monitored, and processed for release to the environment	26, 27
9.3.6.1	to the GRWS, where they are contained, monitored, and processed for release to the environment	26, 27
9.3.6.2.1	the condenser past radiation monitors and are directed to either the RBVS plant exhaust	13, 14, 15, 16
9.3.6.2.1	pressure, temperature, and radiation monitoring instrumentation. The sample vessel is configured to allow grab	17
9.3.6.2.2	the tank past radiation monitors and, if radiation levels are within limits, are discharged	18
9.3.6.2.3	Non-condensable gases removed during the establishment of initial vacuum are monitored for radiation.	13, 14, 15, 16, 17

Key to Radiation Monitors in DCA Part 2 – Tier 2 (FSAR)		
Section/Location	**Context**	**Rad Mon ID #**
9.3.6.2.3	is discharged to the environs through the continuously-monitored RBVS plant exhaust stack.	37, 38, 39, 40, 41
9.3.6.2.3	CES condenser past radiation monitors. If radiation levels of the non-condensable gases exceed	13, 14, 15, 16
9.3.6.2.3	Non-condensable gases removed during the establishment of CNV and RCS vacuum are monitored for radiation.	13, 14, 15, 16
9.3.6.2.3	the tank past radiation monitors. High-radiation levels in the non-condensable gases removed	18
9.3.6.2.3	iodine, and gaseous radiation monitor, as described in Section 9.3.2 and 11.5.	14, 15, 16
9.3.6.3	pump discharge process radiation monitoring. These leak detection methods are consistent with the guidance	13, 14, 15, 16
9.3.6.3	into the CNV. Radiation monitoring for the CES is described in Section 11.5. Regulatory	13, 14, 15, 16, 17
9.3.6.3	in that radiation detectors in the CES condenser vent line and sample tank provide	13, 14, 15, 16, 17
9.3.6.3	Gaseous discharge from the CES condenser and the CFDS containment drain separator tank are monitored for radioactivity	13, 14, 15, 16, 18
9.3.6.3	CES and CFDS process radiation monitors and the bases for their setpoints are discussed in	13, 14, 15, 16, 17, 18
9.3.6.3	however, a radioactivity monitor automatically isolates the line on a high radioactivity indication for required processing prior to a release of effluent.	18
9.3.6.3	The discharge path for noncondensable gases removed from the CNV is monitored for radiation and discharged	13, 14, 15, 16
9.4.1.2.1	redundant smoke detectors, radiation monitors, and toxic gas monitors. The outdoor air intake louver	20
9.4.1.2.2.1	detectors and redundant radiation monitors located in the outside air intake duct.	20
9.4.1.3	gas, and radiation detectors that initiate their closure are also designed to Seismic Category	20, 21, 22, 23
9.4.1.3	The CRVS has radiation monitors, toxic gas monitors, and smoke detectors located in the	20
9.4.1.3	If high levels of radiation are detected downstream of the air filtration unit,	21, 22, 23
9.4.1.3	The CRVS includes radiation monitors in the intake ductwork. When a high radiation signal	20
9.4.1.3	When high radiation is detected downstream of the AFU, a signal is generated to close the outside air isolation dampers, which prevents further contamination from entering the CRB	21, 22, 23
9.4.1.5	intake ductwork includes radiation monitors, toxic gas monitors, and smoke detectors. Additional smoke and	20

Key to Radiation Monitors in DCA Part 2 – Tier 2 (FSAR)		
Section/Location	**Context**	**Rad Mon ID #**
9.4.1.5	Additional smoke and radiation monitors are located downstream of the AHUs. Signals from smoke	21, 22, 23
Table 9.4.1-4	Radiation monitors (upstream of charcoal filtration unit)	20
Table 9.4.1-4	Radiation monitors (downstream of charcoal filtration unit)	21, 22, 23
Figure 9.4.1-1	from the upstream radiation monitors in order to divert air through the air filtration	20
Figure 9.4.1-1	Redundant Rad Monitor	21, 22, 23
9.4.2.1	The exhaust from the RBVS is monitored for radioactive contamination consistent with GDC 60.	32, 33, 34, 35, 36, 37, 38, 39, 40, 41
9.4.2.2.2.2	A high radiation signal from the sensor in the plant exhaust stack provides an alarm in the main control room (MCR), but results in no automatic actions.	37, 38, 39, 40, 41
9.4.2.2.2.2	RXB, providing a monitored release path to the environment for the potentially contaminated air.	37, 38, 39, 40, 41
9.4.2.3	All HVAC exhaust from the RXB, RWB, and ANB is monitored for radioactivity by sensors in the plant exhaust stack.	37, 38, 39, 40, 41
9.4.2.5	Radiation monitors are provided in the SFP exhaust ductwork upstream of	32, 33, 34
9.4.2.5	plant exhaust stack. Radiation monitors are also provided in the general exhaust ductwork from	5, 35, 36, 42, 43
9.4.2.5	plant exhaust stack radiation monitor, and to Section 12.3 for a description of the	37, 38, 39, 40, 41
9.4.2.5	the SFP area radiation monitor.	150
Table 9.4.2-4	Location Local Indication Radiation monitors Duct mounted - spent fuel pool exhaust, plant exhaust	5, 32, 33, 34, 35, 36, 37, 38, 39, 40, 41, 42, 43
9.4.3.1	the RWBVS is monitored and filtered by the RBVS. Design of the RWBVS minimizes	42, 43
9.4.3.2.2.2	RWB General Area Radiation monitors located in the plant exhaust stack discharge and in	5, 32, 33, 34, 35, 36, 37, 38, 39, 40, 41, 42, 43
9.4.3.3	radiation by a radiation monitor in the RBVS. These provisions ensure that the release	37, 38, 39, 40, 41
Table 9.4.3-4	Radiation monitors Duct-mounted in exhaust header and plant exhaust stack	37, 38, 39, 40, 41, 42, 43
9.4.4.3	10, have process radiation monitors to detect radioactive material introduced to the TGB. SD-	8, 9, 10, 11, 19, 29, 30, 52, 53, 54, 55
10.1.2.6	generator tube failure. Radiation monitors in the MSS and the CARS alarm in the	8, 9, 10, 11, 29, 30
10.2.4	The TGS provides for continuous monitoring for radioactivity in the effluent discharge	8, 9, 10, 11, 52, 53, 54, 55
Table 10.3-2	MS line radiation monitor	29, 30
Table 10.3-2	MS line radiation monitor	29, 30
Table 10.3-4	MSS radiation transmitters	29, 30

Key to Radiation Monitors in DCA Part 2 – Tier 2 (FSAR)		
Section/Location	**Context**	**Rad Mon ID #**
10.4.1.2.2	The CARS discharge is also monitored to detect radiation in the system.	8, 9, 10, 11
10.4.1.2.2	is monitored by radiation monitors on the balance-of-plant drain system (BPDS),	6
10.4.1.3	CARS has process radiation monitors on the gaseous effluent lines that discharge to atmosphere	8, 9, 10, 11
10.4.1.3	The CARS monitors the removed gases for radioactivity and can be isolated.	8, 9, 10, 11
10.4.2	the CARS design provides radioactive effluent monitoring in potential discharge pathways to	8, 9, 10, 11
10.4.2	maintain main condenser vacuum, and to monitor for radioactive material.	8, 9, 10, 11
10.4.2.2.1	gaseous effluent discharge radiation monitor	8, 9, 10, 11
10.4.2.1	The gases are monitored and vented directly to atmosphere. The seal water separator returns excess water	8, 9, 10, 11
10.4.2.2.3	CARS by the radiation monitoring system as described in Section 11.5.	8, 9, 10, 11
10.4.2.2.3	Instrumentation is provided for monitoring radiation levels at the discharge of the CARS by the radiation monitoring system as described in Section 11.5.	8, 9, 10, 11
10.4.2.2.3	Process effluent radiation monitoring and sampling is discussed in Section 11.5.	8, 9, 10, 11
10.4.2.3	air removal system. Radiation monitoring equipment continuously monitors gaseous effluent with indication and high	8, 9, 10, 11
10.4.2.3	The CARS meets the requirements of GDC 64 for continuous monitoring for radioactivity in the effluent discharge	8, 9, 10, 11
10.4.2.3	Instrumentation is provided at the discharge as described in Section 11.5.	8, 9, 10, 11
10.4.3.1	provides radioactive effluent monitoring in potential discharge pathways to the environment and is designed	52, 53, 54, 55
10.4.3.2.3	monitored by a radiation monitor and grab sample point located on the exhaust line	52, 53, 54, 55
10.4.3.3	equipped with a radiation monitor and provision for grab sampling. The radiation monitor alarms	52, 53, 54, 55
10.4.3.3	grab sampling. The radiation monitor alarms at high and high-high levels in the	52, 53, 54, 55
10.4.3.3	with regard to monitoring radioactive releases, and is designed to meet the requirements of	52, 53, 54, 55
10.4.5.3	the environment, the radiation monitoring system for the UWS provides an alarm in the	56
10.4.5.3	release point is monitored for radioactivity before discharge to the environment. If high radiation	56
10.4.6.2.3	where it is monitored for contamination. If radioactivity is detected above a predefined set	6

Key to Radiation Monitors in DCA Part 2 – Tier 2 (FSAR)		
Section/Location	**Context**	**Rad Mon ID #**
10.4.6.3	the sump is monitored for radioactivity and routed if needed from the BPDS to	6
10.4.7.3	(Section 10.4.2). Radiation monitors are also provided on the exhaust from the gland	52, 53, 54, 55
10.4.7.3	steam and condensate monitoring with MSS and CFWS isolation capabilities minimize the contamination and	8, 9, 10, 11, 19, 29, 30
10.4.10.1	the system is monitored for radioactivity that may be released from normal operations, including	1, 2, 3, 4
10.4.10.3	postulated accidents. Process radiation monitors on each high-pressure return line from the MHS	1, 2
10.4.10.3	and a process radiation monitor on the vent of the pressure regulating valve on	3
10.4.10.3	the system is monitored for radioactivity that may be released from normal operations, including	1, 2, 3, 4
10.4.10.3	to-line radiation detector monitors the cross-tie line from the high-pressure to low-	4
10.4.10.3	This tank provides a means to monitor for radioactive contaminants in the ABS blowdown line.	7
10.4.10.3	are equipped with radiation monitoring equipment and provisions for sampling by the Process Sampling	1, 2
10.4.10.3	Sampling System. The radiation monitors have high and high-high set points, both of	1, 2
10.4.10.3	heat exchangers has radiation monitors that send a signal to the CVCS to isolate	1, 2
10.4.10.3	the BPDS have radiation monitors to isolate the flowpath to prevent contamination of downstream	4, 7
10.4.10.5	adjacent-to-line radiation monitor is located on the cross-tie line from the	4
10.4.10.5	There are process radiation monitors on each high-pressure return line from the MHS	1, 2
10.4.10.5	and a process radiation monitor on the vent of the pressure regulating valve on	3
Table 10.4-4	Radiation monitor Radioactive contamination CARS gaseous effluent Yes Yes	8, 9, 10, 11
Figure 10.4-2	Gaseous Effluent Discharge Radiation Monitor To Atmosphere	8, 9, 10, 11
11.2.2	The LRWS includes tanks, pumps, filters, and ion exchangers to receive, store, process, and monitor liquid radioactive waste	28
11.2.3.1	liquid wastes and monitoring releases. The design employs the use of a single point	28, 56
11.2.3.1	a single discharge header to the utility water system (UWS) discharge basin, where it is diluted, monitored and released.	56

Key to Radiation Monitors in DCA Part 2 – Tier 2 (FSAR)		
Section/Location	**Context**	**Rad Mon ID #**
11.2.5	that has dual radiation monitors, dual automated isolation valves, a flow-indicating transmitter with	28
11.2.5	a discharge line radiation monitor.	28
11.3	(RBVS) for monitoring and release. The GRWS filters out particulate carryover and delays	37, 38, 39, 40, 41
11.3	are combined and monitored by the RBVS exhaust stack radiation effluent monitor prior to	37, 38, 39, 40, 41
11.3	Section 10.4.3) are monitored, but directly released to the environment as illustrated in Figure	8, 9, 10, 11, 52, 53, 54, 55
11.3.2	stack as a monitored release (See Section 11.5).	37, 38, 39, 40, 41
11.3.2	NuScale Power Modules (NPMs) via the CES, if high radiation is detected in the CES exhaust.	13, 14, 15, 16
11.3.2	decay beds contain radiation monitors that automatically isolate flow in the event of a	27
11.3.2	The GRWS outlet also has an offline radiation monitor with the capability to take samples prior to being sent to the ventilation systems.	26
11.3.2	RWBVS which interfaces with the RBVS that provides the monitored effluent path to the environment.	37, 38, 39, 40, 41
11.3.2.1.4	beds has a radiation monitor that automatically isolates the bed in the event of	27
11.3.2.3	cubicles contain continuous airborne monitors to detect leaks from the GRWS	62
11.3.2.4	Releases to the environment through the plant exhaust stack are monitored.	37, 38, 39, 40, 41
11.3.2.4	The RWBVS outlet flow is monitored and sent to the RBVS.	42, 43
11.3.3	waste gas is monitored and released to the environment through the RBVS exhaust stack.	37, 38, 39, 40, 41
11.3.4	of the discharge radiation monitor closes upon a loss of RBVS or RWBVS flow.	26
11.3.4	accumulation of airborne radioactive materials transported to the atmosphere from equipment in a radiological controlled area, with provisions for radiation monitoring	62
11.3.6	Process radiation monitors are provided at the outlet of each of the two charcoal decay beds.	27
11.3.6	A process radiation monitor is provided at the outlet of the GRWS.	26
11.3.6	Area airborne radiation detectors are located in each of the charcoal bed cubicles. If	62
Table 11.3-3	Gaseous effluents are monitored as they exit the RBVS exhaust stack to the environment.	37, 38, 39, 40, 41
Table 11.3-3	Radiation monitor - Monitor failure - Capability is lost for monitoring waste gas	26
Table 11.3-3	Waste gas stream is monitored for radiation at each of the decay bed outlets	27

Key to Radiation Monitors in DCA Part 2 – Tier 2 (FSAR)		
Section/Location	**Context**	**Rad Mon ID #**
Table 11.3-3	the area airborne monitors. In addition, flange joint color coded telltale leak indicators are	62
11.4.1	areas have area radiation monitoring equipment to detect excessive radiation or airborne levels and	183, 185, 193
11.5.2	Radiation monitoring systems used to detect or quantify reactor coolant leakage into the secondary systems or the containment vessel monitor for Ar-41 concentration	2, 3, 4, 8, 13, 29, 30, 52
11.5.2.1.1	an off-line radiation monitor and integrated sampling system that measures and records exhaust	37, 38, 39, 40, 41
11.5.2.1.1	stack gaseous effluent radiation monitor provides continuous indication for effluent parameters and an alarm	37, 38, 39, 40, 41
11.5.2.1.1	stack gaseous effluent radiation monitor setpoints are developed with sufficient margin to the operating	37, 38, 39, 40, 41
11.5.2.1.1	The RBVS plant exhaust stack flow rate and noble gas, particulate, and halogen activity indications are post-accident monitoring system (PAMS) Type	37, 38, 39, 40, 41
11.5.2.1.2	a single adjacent-to-line Ar-41 monitor.	8
11.5.2.1.2	and noble gas radiation monitor (PING) with grab sampling capability and a single	9, 10, 11
11.5.2.1.2	In addition to radiation monitoring, the CARS effluent flow rate is sensed and used	8, 9, 10, 11
11.5.2.1.2	The CARS gaseous flow and radiation monitors are classified as Post-Accident Monitoring System (PAMS) Type E variables	8, 9, 10, 11
11.5.2.1.3	The exhaust of the turbine gland sealing condenser exhaust fans is monitored for radioactive effluents.	52, 53, 54, 55
11.5.2.1.3	and noble gas radiation monitor (PING) with grab sampling capability	53, 54, 55
11.5.2.1.3	and a single adjacent-to-line Ar-41 monitor.	52
11.5.2.1.4	single off-line radiation monitor with sampling capability at the vent of the pool	31
11.5.2.1.4	water level. The radiation monitor output is sent to the plant control system (	31
11.5.2.1.5	redundant adjacent-to-line radiation monitors prior to being directed to the utility water system	28
11.5.2.1.5	two LRWS effluent radiation monitors higher than the predetermined threshold permissible for planned liquid	28
11.5.2.1.5	The LRWS effluent radiation monitor and isolation functions are designed to meet the requirements	28
11.5.2.1.5	The LRWS effluent radiation monitor reads and records the radiation levels of liquid materials	28

Key to Radiation Monitors in DCA Part 2 – Tier 2 (FSAR)		
Section/Location	**Context**	**Rad Mon ID #**
11.5.2.1.5	provided with area radiation monitoring that provides alarm functions to the MCR. This feature	179, 184
11.5.2.1.5	UWS flow monitoring permits the operator to establish appropriate setpoints for alarm and isolation functions.	56
11.5.2.1.6	The UWS effluent radiation monitor is designed to meet the requirements of GDC 64	56
11.5.2.1.6	UWS liquid effluent radiation monitor provides continuous indication of effluent parameters. An alarm is	56
11.5.2.1.7	The liquid effluent from the circulating water system (CWS) is continuously monitored for radiation via the UWS prior to its exit to the environs.	56
11.5.2.2.1	Three in-line radiation monitors are located upstream of the CRVS filter unit and	20
11.5.2.2.1	two off-line radiation monitors downstream of the CRVS filter unit or if power	21, 22, 23
11.5.2.2.1	The radiation monitors that initiate the isolation for operation of the control room habitability system	21, 22, 23
11.5.2.2.1	The CRVS radiation monitors provide continuous display and alarm capability to the MCR	20, 21, 22, 23
11.5.2.2.1	the off-line radiation monitoring system conform with RGs 8.8 and 8.10 and enhance	21, 22, 23
11.5.2.2.1	power for the radiation monitors downstream of the CRVS charcoal filters is provided by	21, 22, 23
11.5.2.2.1	power for the radiation monitors upstream of the CRVS charcoal filters is provided by	20
11.5.2.2.2	room ventilation system radiation monitors described in Section 11.5.2.2.1.	21, 22, 23
11.5.2.2.3	off-line process radiation monitors, each with built-in sampling capability. The Tier 2	5, 35, 36, 42, 43
11.5.2.2.3	fuel pool exhaust radiation monitors provide continuous display and alarm capability to the MCR	32, 33, 34
11.5.2.2.3	off-line radiation detectors monitor the process flow. Upon a detection of radiation above	32, 33, 34
11.5.2.2.4	The RWBVS is monitored for radiation at the exit of the process stream by the Reactor Building HVAC System process radiation monitor described in Section 11.5.2.2.3.	42, 43
11.5.2.2.4	The RWBVS exhaust duct to the RBVS exhaust fan suction plenum is provided with an off-line process radiation monitor with built-in sampling capability.	42, 43
11.5.2.2.4	plant vent effluent radiation monitor described in Section 11.5.2.1.1. The RWBVS is described in	37, 38, 39, 40, 41

Key to Radiation Monitors in DCA Part 2 – Tier 2 (FSAR)		
Section/Location	**Context**	**Rad Mon ID #**
11.5.2.2.5	The Annex Building HVAC system (ABVS) is monitored for radiation at the exit of the process stream by the Reactor Building HVAC system process radiation monitor described in Section 11.5.2.2.3.	5
11.5.2.2.5	The ABVS exhaust duct to the RBVS exhaust fan suction plenum is provided with an off-line process radiation monitor with built-in sampling capability	5
11.5.2.2.5	plant vent effluent radiation monitor described in Section 11.5.2.1.1.	37, 38, 39, 40, 41
11.5.2.2.6	single off-line radiation monitor is located at the exit of each of the GRWS decay beds.	27
11.5.2.2.6	single off-line radiation monitor is located at the exit of the GRWS on the line to RWBVS.	26
11.5.2.2.6	Airborne radiation detection instrumentation is located in each GRWS charcoal bed cubicle for system leakage detection.	62
11.5.2.2.6	into the environment. Radiation monitors of the GRWS send signals to the PCS providing	26, 27
11.5.2.2.6	exhaust stack effluent radiation monitor prior to release, ensuring compliance with GDC 64 and	37, 38, 39, 40, 41
11.5.2.2.7	The off-line particulate, iodine and noble gas radiation monitor	14, 15, 16
11.5.2.2.7	and the adjacent-to-line Ar-41 monitor installed on the gaseous process stream of the CES vacuum	13
11.5.2.2.7	adjacent-to-line radiation monitor is installed on the sample vessel and in the	17
11.5.2.2.7	and noble gas radiation monitor used to detect radioactivity in the gaseous discharge from	14, 15, 16
11.5.2.2.7	failure of the radiation monitor, or loss of system power, the CES vacuum pump	14, 15, 16
11.5.2.2.7	sample stream. The radiation monitor output is sent to the module control system which	14, 15, 16
11.5.2.2.8	two adjacent-to-line radiation monitors to detect Ar-41.	29, 30
11.5.2.2.8	system (MSS) radiation monitors provide continuous MCR indication and alarm capability. The MSS	29, 30
11.5.2.2.9	an off-line radiation monitor with built-in sampling capability. Upon detection of a	18
11.5.2.2.9	gaseous process stream, radiation monitor failure, or loss of power, the CFDS drain separator	18
11.5.2.2.9	automatically isolated. The radiation monitor output is sent to the module control system (	18
11.5.2.2.10	sample line. The radiation monitoring, high radiation alarm, and automated isolation function is provided by the CES	13, 14, 15, 16

Key to Radiation Monitors in DCA Part 2 – Tier 2 (FSAR)		
Section/Location	**Context**	**Rad Mon ID #**
11.5.2.2.10	sampling line. The radiation monitoring, high radiation alarm, and automated isolation function is provided by the CVCS	12
11.5.2.2.10	alarms. The high radiation monitoring and alarm function is provided by the instrument and and control system of the MSS.	29, 30
11.5.2.2.10	The CVCS, containment evacuation system, and MSS radiation monitors provide	12, 13, 14, 15, 16, 17, 29, 30
11.5.2.2.11	coolant filters. Area radiation monitors are located adjacent to each of the two filters.	79
11.5.2.2.11	range of the radiation monitor is chosen so that the upper end of the	79
11.5.2.2.11	filter area radiation detectors provide for monitoring in a broad range of operating and	79
11.5.2.2.11	CVCS filter area radiation monitors are located outside of the filter shielding and do	79
11.5.2.2.11	area. The area radiation monitor contains a built-in check source for calibration and functional	79
11.5.2.2.11	monitor. The area radiation monitor design features and configuration facilitate ALARA considerations for both	79
11.5.2.2.11	the CVCS area radiation monitors are performed in accordance with manufacturer requirements and use	79
11.5.2.2.11	single adjacent-to-line radiation monitor is provided on the CVCS suction line from the	12
11.5.2.2.11	The CVCS process radiation monitoring functions and automated functions enhance staff capability to meet	12
11.5.2.2.12	adjacent-to-line radiation monitor is provided for the following loads:	44, 45
11.5.2.2.12	cooling water system radiation monitors provide continuous main control room and waste management control	44, 45
11.5.2.2.13	off-line process radiation monitor provided with built-in sampling capability is located downstream	49, 50, 51
11.5.2.2.13	tower basin blowdown line is provided with a single off-line radiation monitor with sampling capability	47
11.5.2.2.13	cooling tower basin overflow lines is provided with a single adjacent-to-line process radiation monitor.	48
11.5.2.2.13	the SCWS blowdown radiation monitor initiates an alarm in the main control room and	47
11.5.2.2.13	The SCWS process radiation monitors provide continuous indication and alarm functions to the main	47, 48, 49, 50, 51
11.5.2.2.13	continuous off-line radiation monitoring is returned to the process system. These design features	47, 49, 50, 51

Key to Radiation Monitors in DCA Part 2 – Tier 2 (FSAR)		
Section/Location	**Context**	**Rad Mon ID #**
11.5.2.2.14	systems. The ABS radiation monitors provide the MCR continuous indication and alarm functions and	1, 2, 3, 4
11.5.2.2.14	adjacent-to-line radiation monitor is located on each of the ABS exits from MHS heat exchangers 6A and 6B.	1, 2
11.5.2.2.14	adjacent-to-line radiation monitor is located on the vent for the high pressure	3
11.5.2.2.14	adjacent-to-line radiation monitor is located on the cross-tie line from the	4
11.5.2.2.14	valves isolate. For radiation monitors in the ABS, Ar-41 is the radionuclide selected	2, 3, 4
11.5.2.2.14	The ABS radiation monitors have local indication and send signals to the MCS	1, 2, 3, 4
11.5.2.2.14	sump tank. A radiation monitor is located on the line to monitor the ABS process flow to the BPDS.	7
11.5.2.2.14	UWS liquid effluent radiation monitor prior to release. In this manner the operator can	56
11.5.2.2.14	the BPDS process radiation monitoring system and the UWS effluent monitoring system can be	6, 7, 56
11.5.2.2.15	following BPDS process radiation monitoring instrumentation is provided for system inputs that have the	6, 7
11.5.2.2.15	adjacent-to-line radiation monitor is located on the line downstream of the ABS	7
11.5.2.2.15	single in-line radiation monitor is located on the north condensate regeneration skid drain	6
11.5.2.2.15	single in-line radiation monitor is located on the south condensate regeneration skid drain	6
11.5.2.2.15	single in-line radiation monitor is located on the north turbine generator building floor	6
11.5.2.2.15	single in-line radiation monitor is located on the south turbine generator building floor	6
11.5.2.2.15	The BPDS process radiation monitors provide continuous indication to the main and waste management	6, 7
11.5.2.2.15	chosen for the radiation monitor that is set sufficiently low to detect leakage without	6, 7
11.5.2.2.16	single adjacent to-line radiation monitor is provided for each of the north and south	24, 25
11.5.2.2.16	headers. The DWS radiation monitors provide continuous MCR indication and alarm capability. To provide	24, 25
11.5.2.2.17	adjacent-to-line radiation monitor is provided on the process inlet to the resin	19
11.5.2.2.17	package. The CPS radiation monitor provides continuous MCR indication and alarm functions. To provide	19
11.5.2.2.17	if the related radiation monitor is not available. The condensate system and the CPS	19

Key to Radiation Monitors in DCA Part 2 – Tier 2 (FSAR)		
Section/Location	**Context**	**Rad Mon ID #**
11.5.2.2.17	power to the radiation monitoring system is supplied by the normal DC power system.	19
11.5.2.2.17	design of the detectors permits removal without breaching the process system for repair, cleaning,	19
11.5.2.2.18	single adjacent-to-line radiation monitor is provided on the normally non-contaminated RCCWS drain	46
11.5.2.2.18	RCCWS drain tank radiation monitor provides continuous main control room indication and alarm capability.	46
11.5.2.2.18	if the related radiation monitor is not available. The Reactor Building RCCWS drain tank	46
11.5.2.2.19	piping, and area radiation monitors with alarm function. This conforms with RGs 8.8 and	176, 193
Table 11.5-4	RBVS	37, 38, 39, 40, 41
Table 11.5-4	CARS	8
Table 11.5-4	CARS	9, 10, 11
Table 11.5-4	TGSS	52
Table 11.5-4	TGSS	53, 54, 55
Table 11.5-4	PSCS	31
Table 11.5-4	LRWS	28
Table 11.5-4	UWS	56
Table 11.5-4	SCWS	56
Table 11.5-4	CWS	56
Table 11.5-4	CRVS Upstream of charcoal filters	20
Table 11.5-4	CRVS Downstream of charcoal filters	21, 22, 23
Table 11.5-4	RBVS	32, 33, 34, 35, 36
Table 11.5-4	RBVS	32, 33, 34, 35, 36
Table 11.5-4	RWBVS	42, 43
Table 11.5-4	ABVS	5
Table 11.5-4	GRWS Common Discharge to HVAC	26
Table 11.5-4	GRWS Decay Bed Discharge Lines	27
Table 11.5-4	CES Vacuum Pump Discharge	14, 15, 16
Table 11.5-4	CES Vacuum Pump Discharge	13
Table 11.5-4	CES Liquid Radiation Monitor	17
Table 11.5-4	MSS	29, 30
Table 11.5-4	CFDS	18
Table 11.5-4	CVCS	12
Table 11.5-4	RCCWS	44, 45
Table 11.5-4	SCWS Heat Exchanger Outlets	49, 50, 51
Table 11.5-4	SCWS Cooling Tower Basin Blowdown	47
Table 11.5-4	SCWS Cooling Tower Basin Overflow	48
Table 11.5-4	ABS Flash Tank Vent	3
Table 11.5-4	ABS HP to LP cross tie	4
Table 11.5-4	ABS MHS Return	1
Table 11.5-4	ABS MHS Return	2
Table 11.5-4	BPDS	6, 7
Table 11.5-4	DWS	24, 25
Table 11.5-4	CPS	19
Table 11.5-4	RWDS	46

Key to Radiation Monitors in DCA Part 2 – Tier 2 (FSAR)		
Section/Location	**Context**	**Rad Mon ID #**
Figure 11.5-6	RBVS Plant Exhaust Stack Effluent Radiation Monitor	37, 38, 39, 40, 41
12.3.1.1.9	handling equipment, and radiation monitoring instrumentation to aid in maintaining personnel exposures ALARA. Cartridge	79
12.3.1.1.11	plant personnel. Radiation detectors monitor each charcoal bed cubicle for gas leaks.	27
12.3.3.3	spent fuel pool exhaust radiation monitors detect radioactivity above their setpoints, the exhaust flow from	32, 33, 34
12.3.3.5	outside air intake radiation monitor, the supply air is routed through the CRVS filter	20
12.3.3.5	received from the radiation monitors downstream of the CRVS filter unit, the control room	21, 22, 23
12.3.4	The ARMs located under the bioshield for each NPM provide	137
12.3.4	The ARMs located adjacent to the CVCS reactor coolant filters provide indication	79
12.3.4	The ARMs located in the reactor pool area and the spent fuel pool area provide the	150, 151
12.3.4	a local area radiation monitor mounted on the refueling bridge with local and MCR	126
12.3.4	GRWS continuous airborne radiation monitor function is described in Section 11.3.	62
12.3.4	The continuous air monitor (CAM) for the GRWS provides an additional function	62
12.3.4.2	The fixed area radiation monitors used for PAM have ranges that consider the maximum	88, 90, 91, 92, 93, 94, 95, 96, 104, 105, 107, 108, 109, 110, 111, 112, 113, 114, 115, 116, 117, 118, 119, 120, 121, 122, 123, 124, 127, 129, 131, 133, 134, 135, 137, 160, 162, 163, 164
12.3.4.2	the bioshield. The radiation monitors under the bioshield are environmentally qualified to survive an	137
12.3.4.2	affect calibration. Radiation detectors used to satisfy PAM requirements are provided a means of	88, 90, 91, 92, 93, 94, 95, 96, 104, 105, 107, 108, 109, 110, 111, 112, 113, 114, 115, 116, 117, 118, 119, 120, 121, 122, 123, 124, 127, 129, 131, 133, 134, 135, 137, 160, 162, 163, 164
12.3.4.2	Fixed area radiation monitors that are classified as a Type B post-accident	137
12.3.4.2	Fixed area radiation monitors that are classified as a Type C PAM variable	137

Key to Radiation Monitors in DCA Part 2 – Tier 2 (FSAR)		
Section/Location	**Context**	**Rad Mon ID #**
12.3.4.2	Fixed area radiation monitors that are classified as a Type E PAM variable	88, 90, 91, 92, 93, 94, 95, 96, 104, 105, 107, 108, 109, 110, 111, 112, 113, 114, 115, 116, 117, 118, 119, 120, 121, 122, 123, 124, 127, 129, 131, 133, 134, 135, 160, 162, 163, 164
12.3.4.3	Selected fixed CAMs support accident condition response and are PAM system variables	59
12.3.4.3	affect calibration. Radiation detectors used to satisfy PAM requirements are provided a means of	59
12.3.4.3	Fixed continuous airborne radiation monitors that are classified as a Type E PAM variable	59
12.3.4.3	Fixed continuous airborne radiation monitors that are not used for PAM variables receive power	57, 58, 60, 61, 62
Table 12.3-10	Under bioshield monitors	137
Table 12.3-10	Hot lab Area	93
Table 12.3-10	Hot lab Airborne	59
Table 12.3-10	Radiation monitors in route to hot lab	90, 91, 92, 94, 95, 110, 111, 112, 113, 114, 118, 120, 129, 131
Table 12.3-10	Safety instrument rooms	109, 117
Table 12.3-10	EDSS switchgear rooms	109, 117
Table 12.3-10	Radiation monitors in route to safety instrumentation rooms and EDSS switchgear rooms	104, 105, 107, 108, 110, 111, 113, 114, 115, 116, 118, 119, 120, 121, 122, 123, 124, 127, 129, 131
Table 12.3-10	RXB access tunnel	160
Table 12.3-10	MCR envelope – main control room area radiation monitor	162
Table 12.3-10	Technical support center	163, 164
Table 12.3-10	Primary Sampling Equipment	88, 96
Table 12.3-10	Containment Sampling System Equipment	133, 134, 135
Table 12.3-14	ABS has four radiation monitors:	1, 2, 3, 4
Table 12.3-14	One on the vent of the high pressure condensate collection tank	3
Table 12.3-14	The second and third are on the returns from each of the two module heatup system (MHS) heaters	1, 2
Table 12.3-14	heaters. The fourth radiation monitor is on the cross-over from the high pressure	4
Table 12.3-15	floor drains). Process radiation monitors are provided in the drain lines from these sources	6, 7
Table 12.3-16	The fixed radiation monitors in proximity of the CES equipment rooms detect high	134, 135
Table 12.3-18	The BPDS monitors the Turbine-Generator Building floor drains for radioactive contamination.	6

Key to Radiation Monitors in DCA Part 2 – Tier 2 (FSAR)		
Section/Location	**Context**	**Rad Mon ID #**
Table 12.3-20	The process radiation monitors are provided downstream of the CRVS filter unit. The	21, 22, 23
Table 12.3-20	The radiation monitors provide the radiological contamination levels in the air after being processed	21, 22, 23
Table 12.3-20	airborne radioactivity utilizing radiation monitors and filtration, or isolation dampers, in the intake duct.	20, 21, 22, 23
Table 12.3-21	The area radiation monitors near the components can assist in detecting potential leaks.	79, 80, 89
Table 12.3-22	CWS leakage into the Turbine Generator Building will be collected by the BPDS, which is monitored for radionuclide contamination.	6
Table 12.3-24	Leak detection is provided by area airborne radiation monitors.	62
Table 12.3-24	The GRWS process radiation monitors return the sampled stream back to the process stream.	26, 27
Table 12.3-24	In-line radiation monitors minimize the spread of contamination and waste generation by	26, 27
Table 12.3-26	The steam line radiation monitors are designed to detect SG tube leaks.	29, 30
Table 12.3-26	Radiation monitors in the RBVS and area radiation monitors can assist in detecting steam leaks into the RXB.	32, 33, 34, 35, 36, 134, 135
Table 12.3-26	air removal system radiation monitors are designed to monitor effluents coming from the condenser	8, 9, 10, 11
Table 12.3-27	An area radiation monitor is provided in each equipment room to assist in	67, 68
Table 12.3-30	Area radiation monitors are provided in the chemistry hot lab and in	59, 93, 134, 135
Table 12.3-30	Process radiation monitors provided in the non-radioactive interfacing systems provide leak detection capability.	1, 2, 3, 4, 6, 7, 24, 25, 44, 45, 47, 48, 49, 50, 51
Table 12.3-31	The RBVS radiation monitors detect potential airborne contamination.	32, 33, 34, 35, 36, 37, 38, 39, 40, 41
Table 12.3-32	The RCCWS is provided with process radiation monitors downstream of interfacing heat exchangers to detect cross contamination	44, 45
Table 12.3-32	The RWDS RCCW drain tank has radiation monitoring	46
Table 12.3-32	The SCWS has radiation monitors to detect cross-contamination from RCCWS heat exchanger leaks	51
Table 12.3-33	RCS leaks into the SG will be detected by radiation monitors associated with the MSS or the condenser air removal system	8, 9, 10, 11, 29, 30

Key to Radiation Monitors in DCA Part 2 – Tier 2 (FSAR)		
Section/Location	**Context**	**Rad Mon ID #**
Table 12.3-34	Although the SCWS is normally at a higher pressure than RPCS, radiation detectors are provided in the site cooling water system to detect RPCS heat exchanger tube leaks into the SCWS.	49
Table 12.3-35	The RWBVS radiation monitors detect potential airborne contamination.	42, 43
Table 12.3-39	The SCW system is provided with process radiation monitors downstream of heat exchangers for the RCCWS, spent fuel	47, 48, 49, 50, 51
Table 12.3-39	The SCWS is provided with both process radiation monitors and sampling provisions to monitor for water quality and	47, 48, 49, 50, 51
Table 12.3-40	The area radiation monitor in proximity of the SFPCS heat exchanger area detects	83
Table 12.3-40	radiation detectors are provided in the SCWS to detect RPCS heat exchanger tube leaks into the SCWS.	50
Table 12.3-41	The area radiation monitors near the SRWS components can assist in detecting potential leaks and spills.	180, 183, 185, 193
Table 12.3-43	and includes a radiation monitor, plus sampling provisions.	56
12.4.1.8	temperature indication and radiation monitors located under the NPM bioshield. To perform primary liquid	137
Table 14.2-36	Verify radiation isolation of GRWS charcoal decay beds upon detection of decay bed discharge flow high radiation level.	26, 27
Table 14.2-66	the RXB by monitoring radiation levels in the building in proximity of the bioshield.	137
Table 14.2-66	Verify radiation monitor indication is obtained in the MCR for each radiation monitor that provides input to the PPS.	(none)
Table 14.2-66	Verify radiation monitor indication is obtained in the MCR for each radiation monitor that provides input to the MPS.	137
Table 14.2-76	RXB radiation monitors are functional.	32, 33, 34, 35, 36
Table 14.2-79	responses of PSS radiation monitors should be verified by laboratory analyses of grab samples	12

Response to Request for Additional Information
Docket No. 52-048

eRAI No.: 9044
Date of RAI Issue: 09/01/2017

NRC Question No.: 09.03.02-7

Regulatory Requirements:

10 CFR Part 50, Appendix A, General Design Criterion 64, requires that "means shall be provided for monitoring the reactor containment atmosphere, spaces containing components for recirculation of loss-of-coolant accident fluids, effluent discharge paths, and the plant environs for radioactivity that may be released from normal operations, including anticipated operational occurrences, and from postulated accidents."

10 CFR 20.1101(b) requires that licensees use to the extent practical, procedures and engineering controls based upon sound radiation protection principles to achieve occupational doses and doses to members of the public that are as low as is reasonably achievable (ALARA).

10 CFR 20.1701 requires the use, to the extent practical, of engineering controls (e.g., ventilation) to control the concentration of airborne radioactive material.

Key Issue: The application does not provide sufficient detail and clarity to determine if the sampling system will be able to meet ALARA and applicable OSHA requirements.

DSRS Section 12.5 specifies that Regulatory Guide (RG) 8.15 "Acceptable Programs for Respiratory Protection" provides elements of an acceptable respiratory protection program. RG 8.15, notes that in 1988, the NRC and the Occupational Safety and Health Administration (OSHA) signed a Memorandum of Understanding (MOU) to clarify jurisdictional responsibilities at NRC-licensed facilities (the MOU was renewed in 2013). The MOU makes it clear that if an NRC licensee is using respiratory protection to protect workers against non-radiological hazards (such as the inhalation of chemicals which could be hazardous to human health), the OSHA requirements apply (including 29 CFR 1910.134, as discussed in RG 8.15). Although NuScale DCD Tier 2, Table 1.9-2, "Conformance with Regulatory Guides" indicates that RG 8.15 is applicable to a COL applicant and not the design. However, design aspects of respiratory protection discussed in RG 8.15 would be applicable to the DCD.

DCD Section 9.3.2.2.1, under "Secondary Sampling System" states that the secondary

sampling system provides a means for monitoring and collecting fluid samples in the steam cycle systems, which includes grab samples. DCD Section 9.3.2.2.2, under “Sample Panels,” indicates that the secondary sampling system does not contain a vent hood enclosure because secondary samples are considered non-hazardous. However, the secondary system could contain radioactivity, primarily as a result of potential primary to secondary leakage. In addition, the secondary system could contain other chemicals which could be hazardous to human health, if inhaled. The use of a vent hood would significantly reduce worker inhalation of radioactive material if there is radioactive material in the secondary system, hence resulting in a potentially lower dose to the worker. It would also reduce worker inhalation to other hazardous chemicals which may be used to inhibit corrosion (such as hydrazine, morpholine, and ammonia) which may be in the secondary system.

Requested Additional Information:

Please explain how the design meets regulatory requirements and guidance as cited above, including maintaining exposures ALARA. Please provide additional justification for why secondary samples are considered non-hazardous and why a vent hood is determined to not be necessary considering the potential for radiological and chemical hazards in the secondary coolant.

NuScale Response:

Regulatory Guide 8.15 addresses plant programmatic issues related to respiratory protection, and does not address issues related to design of the plant. Therefore, no change to FSAR Table 1.9-2 is needed. The secondary system samples are expected to be non-radioactive during normal operation. While primary to secondary leakage is a potential concern for contamination of the secondary system, the process radiation monitors located on the main steam lines as shown on FSAR Figure 10.3-1 provide capabilities of detecting primary to secondary leakage and alerting the operators to abnormal conditions and to manually isolate the secondary systems upon detection of high radioactivity on the secondary side. The radiation monitor is a protection feature that reduces potential dose to workers performing sampling activities. Therefore, vent hood installation on the secondary system sample panel is not necessary because the radiation exposure is nominal.

The concentration of chemicals in the secondary system is expected to be maintained low enough such that the use of personal protective equipment (e.g. gloves, safety glasses) is sufficient for worker safety. Routing of secondary sample lines to a vent hood is typically not necessary. The installation of a vent hood for lab work involving hazardous chemicals (i.e., acids, bases, chemical reagents) to meet OSHA requirements is prudent. However, the monitoring of exposure to hazardous chemicals will be performed as directed by the plant's OSHA required Chemical Hygiene Plan.

FSAR Section 9.3.2.2.2 has been revised to provide a more complete desription of the

secondary sampling panel conditions. The revision is included with the response to RAI 9.3.2-8.

Impact on DCA:

FSAR Section 9.3.2.2.2 has been revised as described in the response above and as shown in the markup provided in this response.

Response to Request for Additional Information
Docket No. 52-048

eRAI No.: 9044
Date of RAI Issue: 09/01/2017

NRC Question No.: 09.03.02-8

Regulatory Requirements:

10 CFR 50.34(f)(2)(vii) requires that applicants perform radiation and shielding design reviews of spaces around systems that may, as a result of an accident, contain accident source term radioactive materials, and design as necessary to permit adequate access to important areas and to protect safety equipment from the radiation environment.

10 CFR 50.34(f)(2)(viii) requires that applicants provide a capability to promptly obtain and analyze samples from the reactor coolant system and containment that may contain accident source term radioactive materials without radiation exposures to any individual exceeding 5 rems to the whole body or 50 rems to the extremities. Materials to be analyzed and quantified include certain radionuclides that are indicators of the degree of core damage (e.g., noble gases, radioiodines and cesiums, and nonvolatile isotopes), hydrogen in the containment atmosphere, dissolved gases, chloride, and boron concentrations.

Key Issue: The application does not contain sufficient clarity and detail for information regarding the ability to obtain a representative sample of the primary coolant post-accident and to be able to conclude it meets regulatory requirements.

DSRS Section 9.3.2 specifies that, the primary review organization and the organization responsible for the review of radiation protection compare the capability of the system to obtain representative samples of process fluids and the locations of sampling points with the guidelines for obtaining representative samples of fluids contained Regulatory Guide (RG) 1.21, "Measuring, Evaluating, and Reporting Radioactive Material in Liquid and Gaseous Effluents and Solid Waste."

RG 1.21 states that sample lines should be flushed for a sufficient period of time before sample extraction to remove sediment deposits, air, and gas pockets and that generally, three line volumes should be purged before withdrawing a sample, unless a technical evaluation or other justification is provided.

While DCD Section 9.3.2 specifies that sample lines are purged for enough time to ensure a representative sample, it does not specify how much time or how many line volumes are considered representative. While COL item 9.3-2 specifies that the COL applicant will develop a post-accident sampling contingency plans for using the process sampling system, it is not clear that this includes describing how a representative sample will be retained.

Based on the Three Mile Island experience, the purge fluid may be highly radioactive, so the process for obtaining representative samples will likely also affect the dose to the worker collecting samples. This is especially true since the design includes the option of using a temporary disposal tank to collect purged sample fluid (as specified in DCD Section 9.3.2.2.3, purged samples "may be disposed to the liquid radioactive waste system (LRWS) or collected in a temporary disposal tank if radiation levels are expected to be too high for disposal to the LRWS").

Requested Additional Information:

Based on the above, please address the following comments/questions:

1. Please update the DCD to specify that the COL applicant will provide information regarding the process for collecting representative samples or provide additional information regarding what constitutes sufficient purge time to ensure that a representative primary coolant sample is being taken following an accident (e.g. specify the number of line volumes or the time it will take and how many line volumes that corresponds to, expected flow rate, etc.).
2. As discussed above, DCD Section 9.3.2.2.3 specifies that the purged sample may be disposed to the LRWS or collected in a temporary disposal tank if radiation levels are expected to be too high for disposal to the LRWS. Post-accident samples would be anticipated to be highly radioactive. If the radiation levels are too high for disposal to the LRWS, it is unclear why it would be appropriate to send the fluid to a temporary tank located within the same room as the workers taking the samples. While the response to RAI 8775, Question 12.03-1 specifies that shielding would be installed around the collection tank, it does not specify what source term is being assumed for the tank (which would be dependent on the volume of sample lines, including associated CVCS lines, would need to be purged before obtaining a representative sample). In addition, it does not appear that the dose from the tank is considered in the post-accident shielding analysis.
    a. Please provide information regarding what radiation dose limits are considered too high for disposal to the LRWS and the basis for such limits as well as the resulting dose rates to operators in the immediate area and adjacent areas. (e.g. would high dose rates in the LRWS result in high dose rates to other areas of the plant expected to be occupied or traversed following an accident?).
    b. Specify under what conditions the temporary purge collection tank is used. Provide additional information regarding the temporary purge collection tank and associated source term and how the dose from the temporary purge collection tank would potentially effect worker dose when collecting a sample. For example, provide the tank size, maximum source term (including volume and dimensions), location of the

tank relative to worker areas when taking samples, amount of shielding assumed, and how it is ensured that this shielding will be available following an accident. Also indicate if there are specific design requirements (e.g., airborne activity control, temperature limitations, hose connectors, etc.) for the temporary purge tank. As part of the response, provide justification for the source term and shielding information used.

3. COL Item 9.3-2 states that "A COL applicant that references the NuScale Power Plant design certification will develop the post-accident sampling contingency plans for using the process sampling system and the CES off-line radiation monitor to obtain reactor coolant and containment atmosphere samples." While this COL item addresses programmatic aspects, it does not specify what the COL applicant will need to have for temporary equipment staged if required during an accident (e.g. adequately sized collection tank, adequate temporary shielding, sample transport cask, etc.). Please update the COL item to ensure that it is clear that the COL applicant will need to identify and procure any necessary temporary equipment and have it available and ready for use following an accident

---

NuScale Response:

Response to Question 1

COL Item 9.3-2 has been revised to include requirement for COL applicant to develop contingency plan for post-accident sample collection, including process for collecting representative samples.

Response to Question 2

a. NuScale does not establish specific radiation dose limits for disposal to the radioactive waste drain system (RWDS) or the liquid radioactive waste system (LRWS). The sample disposed to the RWDS is collected in the RWDS sump located on 24' Elevation of the Reactor Building, and may be subsequently sent to the LRWS. Consequence of disposing the sample to the RWDS or LRWS does not result in high dose rates to other areas of the plant expected to be occupied or traversed following an accident. The process sampling system (PSS) design includes provisions that allow disposing the purged post-accident reactor coolant sample to the LRWS or to the temporary collection tank as alternate option. The temporary collection tank is not intended as a permanent equipment included in the PSS design. The COL applicant may choose to establish dose limits for disposal to the RWDS and/or LRWS and utilizes the temporary collection tank for their site.

b. The COL applicant that references the NuScale Power Plant design certification must determine, as part of its development of site-specific contingency plan for post-accident sample collection, if the use of temporary collection tank is required for its site and provide the basis of its usage. If the tank will be used, the COL applicant is responsible for establishing the size and

location, the conditions that tank will operate (i.e., determine the radiation dose limits for disposal to tank vs to the LRWS and the basis for such limits, determine resulting dose rates to operators in the areas), and any other specific design requirements for the tank (e.g., shielding requirement, airborne activity control, temperature limitations, hose connectors, etc.). COL Item 9.3.2-2 has been revised accordingly.

Response to Question 3

COL Item 9.3-2 has been revised to include requirement for COL applicant to identify necessary temporary equipment (e.g., temporary shielding, sample transport cask, etc.) for post-accident sampling. The revision is inlcuded in the response to RAI question 9.3.2-8.

Impact on DCA:

COL Item 9.3-2 has been revised as described in the response above and as shown in the markup provided in this response.

RAI 02.04.13-1, RAI 03.04.02-1, RAI 03.04.02-2, RAI 03.04.02-3, RAI 03.05.01.04-1, RAI 03.05.02-2, RAI-03.06.02-15, RAI 03.07.01-2, RAI 03.07.01-3, RAI 03.07.02-8, RAI 03.07.02-12, RAI 03.09.02-15, RAI 03.09.02-48, RAI 03.09.03-12, RAI 03.09.06-5, RAI 03.09.06-6, RAI 03.09.06-16, RAI 03.09.06-27, RAI 03.11-8, RAI 03.11-14, RAI 06.04-1, RAI 09.01.05-3, RAI 09.01.05-6, RAI 09.03.02-3, RAI 09.03.02-4, RAI 09.03.02-5, RAI 09.03.02-6, RAI 09.03.02-8, RAI 10.02-1, RAI 10.02-2, RAI 10.04.10-2, RAI 13.01.01-1, RAI 13.01.01-1S1, RAI 13.02.02-1, RAI 13.03-4, RAI 13.05.02.01-2, RAI 13.05.02.01-2S1, RAI 13.05.02.01-3, RAI 13.05.02.01-3S1, RAI 13.05.02.01-4, RAI 13.05.02.01-4S1

Table 1.8-2: Combined License Information Items

Item No.	Description of COL Information Item	Section
COL Item 1.1-1:	A COL ~~Applicant~~applicant that references the NuScale Power Plant design certification will identify the site-specific plant location.	1.1
COL Item 1.1-2:	A COL ~~Applicant~~applicant that references the NuScale Power Plant design certification will provide the schedules for completion of construction and commercial operation of each power module.	1.1
COL Item 1.4-1:	A COL ~~Applicant~~applicant that references the NuScale Power Plant design certification will identify the prime agents or contractors for the construction and operation of the nuclear power plant.	1.4
COL Item 1.7-1:	A COL ~~Applicant~~applicant that references the NuScale Power Plant design certification will provide site-specific diagrams and legends, as applicable.	1.7
COL Item 1.7-2:	A COL ~~Applicant~~applicant that references the NuScale Power Plant design certification will list additional site-specific P&IDs and legends as applicable.	1.7
COL Item 1.8-1:	A COL ~~Applicant~~applicant that references the NuScale Power Plant design certification will provide a list of departures from the certified design.	1.8
COL Item 1.9-1:	A COL ~~Applicant~~applicant that references the NuScale Power Plant design certification will review and address the conformance with regulatory criteria in effect six months before the docket date of the COL application for the site-specific portions and operational aspects of the facility design.	1.9
COL Item 1.10-1:	A COL ~~Applicant~~applicant that references the NuScale Power Plant design certification will evaluate the potential hazards resulting from construction activities of the new NuScale facility to the safety-related and risk significant structures, systems, and components of existing operating unit(s) and newly constructed operating unit(s) at the co-located site per 10 CFR 52.79(a)(31). The evaluation will include identification of any management and administrative controls necessary to eliminate or mitigate the consequences of potential hazards and demonstration that the limiting conditions for operation of an operating unit would not be exceeded. This COL item is not applicable for construction activities (build-out of the facility) at an individual NuScale Power Plant with operating NuScale Power Modules.	1.10
COL Item 2.0-1:	A COL ~~Applicant~~applicant that references the NuScale Power Plant design certification will demonstrate that site-specific characteristics are bounded by the design parameters specified in Table 2.0-1. If site-specific values are not bounded by the values in Table 2.0-1, the COL applicant will demonstrate the acceptability of the site-specific values in the appropriate sections of its combined license application.	2.0
COL Item 2.1-1:	A COL ~~Applicant~~applicant that references the NuScale Power Plant design certification will describe the site geographic and demographic characteristics.	2.1
COL Item 2.2-1:	A COL ~~Applicant~~applicant that references the NuScale Power Plant design certification will describe nearby industrial, transportation, and military facilities. The COL applicant will demonstrate that the design is acceptable for each potential accident, or provide site-specific design alternatives.	2.2
COL Item 2.3-1:	A COL ~~Applicant~~applicant that references the NuScale Power Plant design certification will describe the site-specific meteorological characteristics for Section 2.3.1 through Section 2.3.5, as applicable.	2.3
COL Item 2.4-1:	A COL ~~Applicant~~applicant that references the NuScale Power Plant design certification will investigate and describe the site-specific hydrologic characteristics for Section 2.4.1 through Section 2.4.14, as applicable.	2.4
COL Item 2.5-1:	A COL ~~Applicant~~applicant that references the NuScale Power Plant design certification will describe the site-specific geology, seismology, and geotechnical characteristics for Section 2.5.1 through Section 2.5.5, below.	2.5

Table 1.8-2: Combined License Information Items (Continued)

Item No.	Description of COL Information Item	Section
COL Item 9.1-4:	A COL ~~Applicant~~applicant that references the NuScale Power Plant design certification will provide the periodic testing plan for fuel handling equipment.	9.1
COL Item 9.1-5:	COL Item - The COL ~~Applicant~~applicant that references the NuScale Power Plant design certification will describe the process for handling and receipt of new NuScale Power Modules. • operating and maintenance procedures • inspection and test plans • personnel qualification and operator training	9.1
COL Item 9.1-6:	The COL ~~Applicant~~applicant that references the NuScale Power Plant design certification will provide a design for a spent fuel cask and handling equipment including procedures and programs for safe handling.	9.1
COL Item 9.1-7:	The COL ~~Applicant~~applicant that references the NuScale Power Plant design certification will provide a description of the program governing heavy loads handling. The program should address • operating and maintenance procedures • inspection and test plans • personnel qualifications and operator training • detailed description of the safe load paths for movement of heavy loads	9.1
COL Item 9.2-1:	A COL ~~Applicant~~applicant that references the NuScale Power Plant design certification will select the appropriate chemicals for the reactor component cooling water system based on site-specific water quality and materials requirements.	9.2
COL Item 9.2-2:	A COL ~~Applicant~~applicant that references the NuScale Power Plant design certification will describe the source and pre-treatment methods of potable water for the site, including the use of associated pumps and storage tanks.	9.2
COL Item 9.2-3:	A COL ~~Applicant~~applicant that references the NuScale Power Plant design certification will describe the method for sanitary waste storage and disposal, including associated treatment facilities.	9.2
COL Item 9.2-4:	A COL ~~Applicant~~applicant that references the NuScale Power Plant design certification will provide details on the prevention of long-term corrosion and organic fouling in the site cooling water system.	9.2
COL Item 9.2-5:	A COL ~~Applicant~~applicant that references the NuScale Power Plant design certification will identify the site specific water source and provide a water treatment system that is capable of producing water that meets the plant water chemistry requirements.	9.2
COL Item 9.3-1:	A COL ~~Applicant~~applicant that references the NuScale Power Plant design certification will submit a leakage control program, including an initial test program, a schedule for re-testing these systems, and the actions to be taken for minimizing leakage from such systems.	9.3
COL Item 9.3-2:	A COL ~~Applicant~~applicant that references the NuScale Power Plant design certification will develop the post-accident sampling contingency plans for using the process sampling system and the CES off-line radiation monitor to obtain reactor coolant and containment atmosphere samples. The contingency plan will describe the process for collecting representative samples and disposing radioactive samples. A COL applicant will identify any necessary temporary equipment (e.g., temporary shielding, sample transport cask, etc.) required to support post-accident sampling.	9.3
COL Item 9.4-1:	A COL ~~Applicant~~applicant that references the NuScale Power Plant design certification will specify a periodic testing and inspection program for the normal control room HVAC system.	9.4
COL Item 9.4-2:	A COL ~~Applicant~~applicant that references the NuScale Power Plant design certification will specify periodic testing and inspection requirements for the Reactor Building heating ventilation and air conditioning system in accordance with Regulatory Guide 1.140.	9.4
COL Item 9.4-3:	A COL ~~Applicant~~applicant that references the NuScale Power Plant design certification will specify periodic testing and inspection requirements for the Radioactive Waste Building HVAC system.	9.4
COL Item 9.4-4:	A COL ~~Applicant~~applicant that references the NuScale Power Plant design certification will specify periodic testing and inspection requirements for the TBVS.	9.4

As indicated in Section 1.9, there are no generic letters, unresolved safety issues, or relevant operating experience insights for this system. The relevant Three Mile Island requirements are discussed above and in Section 9.3.2.3 (Item III.D.1.1 in NUREG-0737).

Primary Sampling System

The plant design does not employ sample lines which penetrate the containment vessel (CNV) and the reactor pressure vessel to directly obtain reactor coolant samples from the reactor coolant system (RCS). Instead, the required reactor coolant samples are drawn from sample lines connected to the CVCS process piping located outside of the CNV as shown on Figure 9.3.4-1. A primary sampling system for each NuScale Power Module (NPM) monitors and collects reactor coolant samples from its respective CVCS to verify primary chemistry.

The major components of the primary sampling system include: sample coolers, sample chiller temperature control units, continuous sample analysis panels, semi-continuous ion chromatography panels, grab sample panels, pressurized sample collector, primary sample return pump, and associated valves including pressure reduction and temperature control valves. Sharing of primary sampling system equipment between operating units is limited to ion chromatography units shared between NPMs and shared plant cooling water systems for direct sample cooling and cooling of shared chiller units.

Table 9.3.2-1 summarizes the primary sampling system sample points and the analysis capability of the installed continuous sample panels.

Containment Monitoring and Sampling System

During normal operation, the containment vessel is monitored for hydrogen and oxygen gas concentration using the containment sampling system. From a sample point downstream of the discharge of the CES vacuum pumps condenser for each CNV, the CSS sample pump draws the sample gas through in-line hydrogen and oxygen monitors and returns the sample gas to the CES. The in-line hydrogen and oxygen monitors provide continuous gas concentration indication to the MCR. Grab sampling capability is provided from the off-line CES radiation monitor as described in Section 11.5. The analysis of grab samples provides an independent indication of process hydrogen and oxygen content to validate in-line monitor indication and serves as a redundant means to determine process gas concentration in the event that in-line hydrogen and oxygen monitoring is unavailable.

RAI 09.03.02-3, RAI 09.03.02-4, RAI 09.03.02-5, RAI 09.03.02-6, RAI 09.03.02-8

For post-accident conditions, the gas monitors used during normal plant conditions provide hydrogen and oxygen indication. To establish sample flow, the ~~CNV isolation valves~~CIVs for CES and CFDS are opened, and the CSS sample pump aligned to take a suction from the CES vacuum pump bypass line. The sample gas is returned to the CNV using the associated containment flooding and drain system

(CFDS) piping and valves, downstream of the CFDS return-side NPM isolation valves as shown on Figure 9.3.6-2.

For both the normal and post-accident hydrogen and oxygen monitoring sampling alignments there are no shared gas monitoring components between NPMs, a CSS is provided for each module.

Table 9.3.2-2 summarizes the CSS sample point and the analysis capability of the installed continuous sample panel.

Secondary Sampling System

The SSS provides a means for monitoring and collecting fluid samples in the steam cycle systems. The systems serviced by the SSS are the condensate and feedwater system, the main steam system (MSS), and the auxiliary boiler system (ABS). Emphasis is placed on continuous monitoring of the secondary system condensate pump discharge, condensate polisher effluents, feedwater, and main steam. The SSS also includes grab sample capability for diagnostic sampling.

The SSS has both module-specific and shared components. The SSS is comprised of the following major components: sample coolers, sample chiller temperature control units, sample panels, ion chromatography analysis panels, and associated valves including pressure reduction and temperature control valves. The SSS sample panels are located in the Turbine Generator Building.

Sharing of SSS equipment between operating units includes four ion chromatography units, each shared between the condensate polishing system sample streams for three modules and shared plant cooling water systems for direct sample cooling and cooling of the shared chiller units.

Table 9.3.2-3 summarizes the SSS sample points and the analysis capability of the installed continuous sample panels.

Local Sample Points

For systems not being serviced by equipment of the primary sampling system, CSS, or SSS, local sample points are provided. Local sample points employ locally-installed sampling equipment such as an inline sampler for grab sample collection, local analyzers for continuous sampling and analysis, and local sample panels. Local sampling points, as listed in Table 9.3.2-4, are provided for various auxiliary process systems. Local sampling equipment (e.g., in-line sampler, local analyzer, etc.) is considered to be a component of the system to which it is connected.

9.3.2.2.2 Component Description

Sample Coolers

The primary and secondary sampling systems are equipped with two stages of sample coolers cooled by plant cooling water systems (first stage cooling) or chilled water systems (second stage cooling) depending on the sample stream

temperature. Sample streams over approximately 100 degrees Fahrenheit get first stage cooling and additional second stage cooling when the sample stream is directed to an analysis panel or ion chromatograph panel. Some of the sample streams in the secondary system may receive cooling from only the chilled water supplied sample coolers.

The sample coolers are tube-in-shell design. The sample flows through the tube side and cooling water flows through the shell. Cooling water for the first stage coolers is supplied from the reactor component cooling water system (RCCWS) for the primary sampling system and the site cooling water system (SCWS) for the SSS.

Sample Chiller Temperature Control Units

Second stage sample coolers are supplied with chilled water from temperature control units in order to ensure the sample temperature required by the analysis equipment.

The refrigerant systems for the temperature control units are cooled by RCCWS in the primary sample system and SCWS in the SSS. The temperature control units are shared equipment, each cooling sample streams for up to six modules.

Sample Panels

Each PSS subsystem typically consists of sample panels needed to support sampling activity. Grab sample provisions are included with some sample panels to permit safe collection of grab samples from plant fluids for laboratory analysis. The sample panels used for grab sample collection of reactor coolant are equipped with a vent hood and enclosure due to potential for exposure to airborne radiologically contaminated materials and the potential chemical hazards of these samples. The vent hood exhaust is connected to the ventilation duct of the Reactor Building HVAC system. Sample sinks are also provided to accommodate potential spills and to drain excess grab samples. Before samples are taken, sample lines are purged for enough time to ensure a representative sample is procured from the process or vessel. After purging, the sample stream can be directed to the grab sample line above the sink for collection in a container. Pressurized reactor coolant samples can be routed to the pressurized sample collector, which allows grab samples to be collected in pressurized sample vessels and taken for further analysis in the laboratory.

RAI 09.03.02-3, RAI 09.03.02-4, RAI 09.03.02-5, RAI 09.03.02-6, RAI 09.03.02-8

The sample panels of the SSS include the capability to perform online analysis, and some panels also include capability to collect grab samples. Sinks are provided at the SSS sample panels with grab sampling capability. ~~Because the secondary samples are considered non-hazardous,~~The secondary system samples are expected to be non-radioactive during normal operation; therefore, the vent hood enclosure is not provided for the secondary system grab sample panel. While primary to secondary leakage is a potential concern for contamination of the secondary system, the process radiation monitors located on the main steam lines as shown on Figure 10.3-1, as well as radiation monitors on the condenser air

removal system (CARS) as described in Section 11.5, provide capabilities of detecting primary to secondary leakage and alerting the operators to abnormal conditions and to manually isolate the secondary systems upon detection of high radioactivity on the secondary side.

Pressurized Sample Collector

The pressurized sample collector is used to collect pressurized samples of the reactor coolant for analysis of radioactivity and hydrogen. The pressurized sample collector is included as part of the primary sampling system sample panel. The pressurized sample collector includes a sample vessel designed to withstand the reactor coolant design pressure and temperature.

Primary Sample Return Pump

Purged samples and samples from the primary sampling system analyzers are returned to the CVCS process loop. A primary sample return pump is provided at the common return line. There is one pump to support primary sampling of each NPM.

Valves

RAI 09.03.02-3, RAI 09.03.02-4, RAI 09.03.02-5, RAI 09.03.02-6, RAI 09.03.02-8

The PSS includes remotely-operated sample line isolation valves~~, which directly interface with systems being sampled~~. ~~The sample line isolation valves are remotely-operated pneumatic valves supplied with control air from the instrument air system described in Section 9.3.1.~~ These valves are equipped with position indication and are controlled from the main control room (MCR) or at local valve control panels with either module control system (MCS) or plant control system (PCS) providing applicable control functions. Manual valves are locally controlled by personnel performing sampling activities. The semi-continuous sampling function associated with the shared ion chromatography units is accomplished with ~~two~~ programmable manifold valves. ~~Each manifold valve alternately sequences the sample streams of up to six modules to the ion chromatography units.~~

9.3.2.2.3 System Operation

Normal Operations

For normal sampling at power, the primary sampling system performs continuous and semi-continuous sampling and analysis of reactor coolant discharge from the RCS. Additionally, grab samples are collected from the various sample locations in the CVCS process loop. Normal sample points of the primary sampling system are provided in Table 9.3.2-1.

During normal operation, the containment vessel is monitored for hydrogen and oxygen gas concentration using the containment sampling system. From a sample

condensate before it returns and mixes with the coolant remaining in the reactor vessel would not provide useful information and therefore sampling of containment liquid is not performed.

RAI 09.03.02-3, RAI 09.03.02-4, RAI 09.03.02-5, RAI 09.03.02-6, RAI 09.03.02-8

Since the PSS connects outside of the CIVs associated with the CVCS and CES, post-accident sampling with PSS requires opening these CIVs. It is expected that post-accident sampling will be performed when plant conditions are amenable to opening CIVs without overriding the containment isolation signal (CIS) to minimize risks to plant equipment and personnel. If post-accident sampling must be performed while containment isolation conditions exist, overriding the containment isolation signal (CIS) is required. ~~The CVCS is designed for full RCS design pressure and the associated CIVs are provided with override capability that does not require reset of the containment isolation signal. The CES is a low pressure system not designed for full containment design pressure and has not been provided with override capability. Accident simulations project that in approximately 24 hours following a containment isolation initiation, RCS temperatures will fall below 200 degrees Fahrenheit, permitting the opening of the containment evacuation system CIVs to support sampling at that time if necessary.~~

RAI 09.03.02-3, RAI 09.03.02-4, RAI 09.03.02-5, RAI 09.03.02-6, RAI 09.03.02-8

~~Post-accident water level in the reactor vessel for some events may be below the level of the normal CVCS reactor vessel nozzle (for reactor coolant discharge to CVCS). Under these conditions sampling would be delayed unless restoration of water level above the CVCS reactor vessel nozzle is directed by emergency operating procedures or severe accident mitigating guidelines.~~

RAI 09.03.02-3, RAI 09.03.02-4, RAI 09.03.02-5, RAI 09.03.02-6, RAI 09.03.02-8

The CIV hydraulic actuator design and control as described in Section 6.2.4.2.2 are utilized in opening the CIV. Design features of the CIV hydraulic actuators ensure that the valves can be re-opened following the design basis event. The hydraulic cylinder on the actuator applies force to open the CIV. The hydraulic cylinders are pressurized by the hydraulic skid. The hydraulic pump drivers on the CIV hydraulic skids is powered by the ELVS, which has a backup power source if normal AC power source is not available. The hydraulic control skid is also designed to support a limited number of CIV re-openings without reliance on AC power after a design basis event. However, the post-accident sampling will be performed when there is power available to the CIV hydraulic skids such that the valves can be reopened using normal control provided in the MCR.

Reactor Coolant Post-Accident Sampling

RAI 09.03.02-3, RAI 09.03.02-4, RAI 09.03.02-5, RAI 09.03.02-6, RAI 09.03.02-8

~~Once the CIVs related to the CVCS letdown line are opened, RCS pressure is used, as in normal operation, to force the RCS sample to the sample panel. At temperatures below 200 degrees Fahrenheit with insufficient RCS pressure, a nitrogen overpressure can be established.~~Post-accident water level in the reactor vessel for some events may be below the level of the normal CVCS discharge line nozzle on

the reactor vessel. Under these conditions, RCS sampling would be delayed unless restoration of water level above the CVCS discharge line reactor vessel nozzle is directed by emergency operating procedures or severe accident mitigating guidelines.

RAI 09.03.02-3, RAI 09.03.02-4, RAI 09.03.02-5, RAI 09.03.02-6, RAI 09.03.02-8

At temperatures below 200 degrees Fahrenheit with RCS pressure insufficient to withdraw a sample, nitrogen can be injected into RCS to raise pressure and draw samples out of the reactor vessel. Nitrogen is provided via the nitrogen distribution system (NDS) connection to the RPV high point degasification line as shown on Figure 9.3.4-1.

RAI 09.03.02-3, RAI 09.03.02-4, RAI 09.03.02-5, RAI 09.03.02-6, RAI 09.03.02-8

~~The~~When adequate RCS level and pressure have been established, the CVCS discharge line CIVs are opened to collect the reactor coolant post-accident sample~~ is collected~~ via the CVCS sample line flow path to the primary sampling system sample panel. Collection of a pressurized reactor coolant sample is not required. The purged sample may be disposed to the radioactive waste drain and subsequently sent to the liquid radioactive waste system (LRWS) or collected in a temporary disposal tank if radiation levels are expected to be too high for disposal to the LRWS. Use of temporary shielding and portable air filtration equipment may be required to support reactor coolant post-accident sample collection~~ in the CVCS gallery~~. If necessary, the sample vessel is put inside a radiation-shielded cask and the cask is loaded to a transport cart for movement to the counting room and hot lab. Provisions for portable shielding may be required to protect personnel performing sample transport.

Containment Gas Post-Accident Monitoring and Sampling

RAI 09.03.02-3, RAI 09.03.02-4, RAI 09.03.02-5, RAI 09.03.02-6, RAI 09.03.02-8

The PSS design has capabilities for post-accident containment gas sampling to allow monitoring of hydrogen and oxygen inside containment post-accident for combustible gas control. CNV structural integrity is not challenged by combustion events propagated by combustible gas concentrations generated within the first 72 hours of any design basis or beyond design basis event, and no mitigating actions are required during this period. As a result, monitoring of hydrogen and oxygen concentrations in the CNV to inform mitigating actions is not required prior to 72 hours after initiation of an event.~~ The monitoring of containment hydrogen and oxygen levels can commence when CNV pressure and temperature are below the CES and PSS piping and component limiting design parameter of 250 psig. Plant conditions amenable to plant sampling exist within 2 hours of the most limiting design basis event, and will require override of the CNV containment isolation valves for the CES and CFDS.~~

RAI 09.03.02-3, RAI 09.03.02-4, RAI 09.03.02-5, RAI 09.03.02-6, RAI 09.03.02-8

Post-accident sampling and monitoring of containment gas can be initiated when plant conditions are amenable to opening the CES and CFDS CIVs without overriding CIS, and do not exceed design limitations of the CES and CFDS piping.

The design pressure of the CES piping downstream of the CIVs are 250 psig. The design pressure the CFDS piping downstream of the CIVs are 150 psig.

RAI 09.03.02-3, RAI 09.03.02-4, RAI 09.03.02-5, RAI 09.03.02-6, RAI 09.03.02-8

While the plant responses in accident conditions show the containment pressure is reduced to 150 psia in approximately two (2) hours after event initiation, the CIS is not cleared by this time to open the CES and CFDS CIVs for sampling. The RCS is expected to cool down to less than 200°F in approximately 24 hours after event initiation such that there is automatic operating bypass of CIS. Therefore, the containment gas post-accident sampling can be performed without overriding the CIS in approximately 24 hours after event initiation.

RAI 09.03.02-3, RAI 09.03.02-4, RAI 09.03.02-5, RAI 09.03.02-6, RAI 09.03.02-8

~~The normal gas monitors in the PSS provide post-accident hydrogen and oxygen concentration indication.~~ To initiate ~~this function~~post-accident containment gas sampling, the ~~CNV isolation valves for~~ CES and CFDS CIVs are opened using normal means in the MCR to establish the monitoring and sampling flow paths. ~~A manual logic override is required to open the CNV isolation valves if RCS temperature is greater than 200 degrees F and containment parameters are greater than the containment isolation setpoints. The CES and PSS are then aligned to allow the CSS sample pump to take a suction from the CES vacuum pump bypass line and return the monitored gas to the CNV using the CFDS.~~The containment gas released from the CNV is routed from the CES to the containment sampling system for online hydrogen and oxygen monitoring. The sampled gas is then returned to the CNV via the PSS effluent discharge line connected to the CFDS return line to CNV as shown on Figure 9.3.6-2. Returning the sampled gas back to the CNV eliminates releasing effluent to the environment.

RAI 09.03.02-3, RAI 09.03.02-4, RAI 09.03.02-5, RAI 09.03.02-6, RAI 09.03.02-8

The CES piping is sloped to allow condensed liquid to drain back the CNV and the ~~PSS~~CES sample line piping is heat traced to prevent the build-up of condensate within the containment gas monitoring lines and analyzer to ensure monitoring capability under accident conditions. The heat trace of CES sample line is powered by the EDNS, which has a backup power source if the normal sources of AC electrical power are unavailable.

Grab sampling capability is provided from the off-line CES radiation monitor described in Section 11.5. The analysis of grab samples provides information to allow the licensee to understand the magnitude of any remaining threat that the accident may pose after plant conditions stabilize post-accident. Grab sample analysis also provides independent indication of process hydrogen and oxygen content to validate in-line monitor indication and serves as a redundant means to determine process gas concentration in the event that in-line hydrogen and oxygen monitoring is unavailable. If necessary, the sample vessel is placed inside a radiation-shielded cask and the cask loaded to a transport cart for movement to the counting room and hot lab. Provisions for portable shielding may also be required to protect personnel performing sampling and sample transport.

RAI 09.03.02-3, RAI 09.03.02-4, RAI 09.03.02-5, RAI 09.03.02-6, RAI 09.03.02-8

COL Item 9.3-2: A COL applicant that references the NuScale Power Plant design certification will develop the post-accident sampling contingency plans for using the process sampling system and the CES off-line radiation monitor to obtain reactor coolant and containment atmosphere samples. The contingency plan will describe the process for collecting representative samples and disposing radioactive samples. A COL applicant will identify any necessary temporary equipment (e.g., temporary shielding, sample transport cask, etc.) required to support post-accident sampling.

9.3.2.3 Safety Evaluation

The PSS has no safety-related or risk-significant functions and is not required to prevent or mitigate the consequences of a design basis accident, to shut down the reactor and maintain safe shutdown conditions, or to maintain the integrity of the RCPB.

Consistent with GDC 1, process sampling system SSC are designed, fabricated, erected, and tested to appropriate quality standards such that their failure does not impact the function of safety-related or risk-significant systems. The quality group classification of the PSS sample line isolation valves and piping which directly interface with the system being sampled is equivalent to the quality classification of the system to which each sampling line and component is connected. The highest quality group classification of PSS components is Quality Group D conforming to RG 1.26. PSS piping conforms to American Society of Mechanical Engineers (ASME) B31.1 (Reference 9.3.2-2).

General Design Criteria 2 was considered in the design of the PSS. The primary sampling system and the CSS components are located inside the Seismic Category I Reactor Building (RXB). No portions of the PSS or components are safety-related or required to perform a safety-related or risk-significant function. The PSS does not connect to any Seismic Category I systems. The PSS connects to the CVCS and CES on the portions of these systems that are not part of RCPB and not designed to Seismic Category I requirements. The PSS piping and components downstream of the sample line isolation valve are designed to Seismic Category III, but are upgraded to Seismic Category II if the routing of PSS piping or the location of components is determined to result in a condition where failure of process sampling system SSC could impact Seismic Category I SSC.

The PSS does not employ sample lines which penetrate the CNV and the reactor pressure vessel; therefore, there is no containment isolation function associated with the system. There is no physical interaction of process sampling system SSC with safety-related SSC. Process sampling system failure does not adversely affect the integrity of safety-related systems.

General Design Criteria 4 was considered in the design of the PSS. The PSS and its components are designed to accommodate the effects of the environmental conditions associated with normal operation and shutdown. Even though the PSS has no safety-related or risk-significant functions, the primary sampling system and the CSS portions of the PSS are expected to operate after design basis accidents; therefore, these PSS subsystems are also designed to withstand postulated accident environmental conditions to ensure that the post-accident sampling function of the system can be performed.

General Design Criteria 5 was considered in the design of the PSS. The sharing of the PSS components between power modules does not affect the ability of the SSC to perform required safety functions, including in the unlikely event of an accident in one unit, an orderly shutdown and cooldown of the remaining units.

RAI 09.03.02-3, RAI 09.03.02-4, RAI 09.03.02-5, RAI 09.03.02-6, RAI 09.03.02-8

Sharing of the PSS components across NPMs has been minimized to the extent practical. The shared components are downstream of ~~CNV isolation valves~~CIVs to ensure that SSC ability to perform safety functions is not impaired. Shared functions are described in Section 9.3.2.2.

The PSS design satisfies GDC 13 in that sampling of reactor coolant enables the PSS to provide information on variables that can affect the fission process, the integrity of the reactor core, and the RCPB during all normal modes of operation. The PSS is relied upon to collect water and gaseous samples from the RCS and associated auxiliary systems during normal modes of operation.

The PSS design satisfies GDC 14 as it relates to ensuring integrity of the RCPB by sampling reactor coolant for chemicals that can affect the RCPB. Sampling and analysis of reactor coolant samples verify that key chemistry parameters, such as chloride, hydrogen, and oxygen concentrations, are within prescribed limits and that impurities are properly controlled, providing assurance that the many mechanisms for corrosive attack are mitigated and will not adversely affect the RCPB.

The PSS design satisfies GDC 26 by allowing verification of the boron concentration necessary for the control of core reactivity changes by sampling the reactor coolant and the content of the boric acid storage tanks of the BAS.

~~General~~Principal Design Criteria 41 is not addressed by the PSS design since the containment design does not use a containment spray system or a containment atmosphere cleanup system to mitigate the consequences of postulated accidents. Therefore, sampling of the chemical additive tank is not applicable to the design.

The PSS design satisfies GDC 60, as it provides the capability to control the release of radioactive materials to the environment by sampling effluents. The PSS includes local grab sample points incorporated into the designs of systems which have effluent release paths to the environment permitting effluent sample analysis prior to release. Additionally, PSS sample line isolation valves which contain reactor coolant are designed to fail closed to control the potential release of radioactive materials to the environment.

Provisions are made in the design of the PSS to route the samples back to the system of origin or to the applicable radioactive waste system as appropriate to control the release of radioactive material.

RAI 09.03.02-3, RAI 09.03.02-4, RAI 09.03.02-5, RAI 09.03.02-6, RAI 09.03.02-8

The PSS design limits the potential reactor coolant loss from the rupture of a sample line. A failure of a sample line would result in a loss of flow to either a continuous analyzer or a grab sample panel which would be observed by plant personnel. In

addition, a break in a sample line would result in activity release ~~and a resulting actuation of~~that might actuate the fixed area radiation monitors located in the containment sampling system equipment area and the primary sampling system equipment area, as described in Table 12.3-10. The three PSS sample points to the CVCS are each provided with two fail-closed~~, air operated~~ isolation valves~~; one in the CVCS and one in the PSS~~. These isolation valves are downstream of the environmentally qualified CIVs associated with the CVCS discharge line and are also downstream of the CVCS module isolation valves as shown on Figure 9.3.4-1. ~~After the PSS isolation valve, the PSS piping reduces from 3/4" to 3/8" inch in diameter,~~The PSS line sizes range from 3/4" to 3/8" which further restricts the break flow of a sample line outside containment.

The PSS design satisfies GDC 63 by allowing the detection of conditions that may result in excessive radiation levels in the fuel storage and radioactive waste systems. The PSS includes sampling capability of the spent fuel pool and reactor pool water via local sample points in the pool cooling and cleanup system. The PSS also includes sampling capability via local sample points for the radioactive waste management systems. This enables analyses to be performed to detect conditions in the fuel storage and radioactive waste systems that could result in excessive radiation levels and excessive personnel exposure.

The PSS design satisfies GDC 64 as it provides the capability to sample and analyze for radioactivity that may be released during normal operations, anticipated operational occurrences, and postulated accidents. The PSS can provide information to indicate the potential for breaching a fission product barrier (i.e., fuel cladding, primary coolant pressure boundary, and containment) and information that indicates that a fission product barrier has been breached.

RAI 09.03.02-3, RAI 09.03.02-4, RAI 09.03.02-5, RAI 09.03.02-6, RAI 09.03.02-8

The PSS design satisfies 10 CFR 50.34(f)(2)(xvii)(c) by providing containment sampling including oxygen and hydrogen analyzers. These monitors are nonsafety-related instruments that continuously monitor oxygen and hydrogen concentrations in containment during operation and are capable of monitoring during beyond design-basis conditions. The hydrogen analyzer output signal is sent to the MCS, which provides readout in the main control room.

RAI 09.03.02-3, RAI 09.03.02-4, RAI 09.03.02-5, RAI 09.03.02-6, RAI 09.03.02-8

The PSS design satisfies 10 CFR 50.34(f)(2)(xxvi) (Item III.D.1.1 in NUREG-0737), as it relates to including provisions for leakage control and detection to prevent unnecessarily high exposures to workers and the public and to maintain control and use of the system post-accident. The PSS design includes provisions for leakage control and detection. ~~Fail closed isolation valves on the sample lines containing reactor coolant limit reactor coolant loss from sample line ruptures.~~Flow and pressure instrumentation on the sample lines can provide indication of potential leaks. Radiation monitoring capabilities are provided for detecting excessive radiation level ~~both during normal and accident conditions~~resulting from system leakage. The sample line can be isolated upon detection of high radiation by the CVCS or CES process radiation monitor located upstream of the sample line as shown in Figure 9.3.4-1 and

Figure 9.3.6-1 respectively. Excessive radiation level detected by the fixed area radiation monitor located in the primary sampling system or the containment sampling system equipment areas described in Table 12.3-10 can also provide indication of system leakage that warrants system isolation for leakage control.

The PSS design satisfies the requirements of 10 CFR 50.44(c)(4), as the equipment design attributes conform to RG 1.7 regulatory position C.2. It provides the ability to monitor containment hydrogen and oxygen using an in-line monitor for both normal and accident conditions. In addition grab sampling provisions are provided on the CES off-line radiation monitor to validate in-line monitor indication and serve as a redundant means to determine process gas concentration in the event that in-line hydrogen and oxygen monitoring is unavailable.

The PSS design features and configuration support ALARA program goals and objectives with regard to minimizing dose and contamination. The PSS design ensures that the ALARA requirements of 10 CFR 20.1101 and contamination minimization requirements of 10 CFR 20.1406 are addressed.

The PSS sample panels are located in rooms or areas of the RXB that facilitate controlling the spread of contamination. The PSS primary sampling system and CSS components are located in areas classified as a low radiation zone. Based on PSS equipment locations in the RXB, additional shielding design beyond what is provided by the building structures is not needed for normal operation.

Any sampling components that contain potentially radioactive fluids, such as sample coolers, isolation valves, and associated piping, are located in shielded compartments or away from the sample panel to the extent practical to minimize the source volume exposed at the sample panel. Personnel exposure to radioactive fluids is minimized by the use of vent hoods, valve arrangement, sample vessel connections, and control of the sample pressure during operation by proper valve lineup. Personnel exposure to radioactive gases is minimized by maintaining air flow through the vent hood. The PSS is also designed for high, continuous purge flow for quick, accurate sample collection to minimize personnel exposure at the operating location.

Reactor coolant samples during normal operations are routed to sample stations located in the centralized hot lab for grab sample collection and analysis. This design feature minimizes potential spills of samples while transporting the grab samples to the lab. A counting room is provided in the RXB next to the hot lab to perform routine radiochemical analyses on samples containing radioactive material collected from air, water, surfaces, and other sources within the plant and the surrounding environment. Local sample points associated with potentially radioactive systems are also minimized to the extent practical to reduce manual operations in radiological work areas, and subsequently reduce dose and minimize contamination.

The potential for radiological contamination from the PSS to interfacing non-radioactive systems is reduced by including radiation monitoring, isolation capability and backflow prevention. Potential radiological contamination from the PSS to the RCCWS is minimized by providing radiation monitors in the RCCWS downstream of

The PSS is also equipped with analysis instrumentation. Information on the process stream is gathered by an analysis probe or sensing element which relays the information back to the analyzer. The analyzer continuously performs chemical analysis of the inputs from the probe and transmits the results to the applicable data acquisition system or plant computer system.

The PSS alarms are nonsafety-related alarms and are intended to trigger manual operator action. Alarms are initiated via PSS instrumentation interface with the MCS or PCS. Alarm indication is provided at the PSS panel and certain alarm signals are also sent to the MCR display.

The MCS provides the control system interface for module-specific PSS components. The PCS provides the control system interface for common or shared PSS components. Control of PSS remotely-operated sample line isolation valves is performed from the MCR. The PSS remotely-operated valves include position indicators.

RAI 09.03.02-3, RAI 09.03.02-4, RAI 09.03.02-5, RAI 09.03.02-6, RAI 09.03.02-8

~~In order to obtain a reactor coolant sample during post-accident operation with a containment isolation signal present, a containment isolation signal override must be enabled by control room operator action to allow opening of the applicable CVCS CIVs. This control feature ensures that the MCR operator has control over post-accident sampling operations when a containment isolation signal is present. Operator action ending the CIV override returns affected CIVs to the closed position.~~

RAI 09.03.02-3, RAI 09.03.02-4, RAI 09.03.02-5, RAI 09.03.02-6, RAI 09.03.02-8

~~To initiate containment gas monitoring and sampling, the CNV isolation valves for CES and CFDS are opened to establish the monitoring and sampling flow paths. A manual logic override is required to open the CNV isolation valves if RCS temperature is greater than 200 degrees F and containment parameters are greater than the containment isolation set points.~~Post-accident sampling should be performed when plant conditions are amenable to sampling and CIVs can be opened without bypassing the CIS. However, if post-accident sampling must be commenced prior to clearing CIS, the CIS can be overridden to operate the certain CIVs. The CIS manual override switches (one per division) are provided in the MCR to bypass the CIS and open the CVCS and CFDS CIVs. The CES CIVs are not provided with CIS manual override switches in the MCR. Operator actions outside of the MCR is required to bypass CIS and open CES CIVs.

9.3.2.6 References

9.3.2-1 ANSI/HPS N13.1-2011, "Sampling and Monitoring Releases of Airborne Radioactive Substances from the Stacks and Ducts of Nuclear Facilities."

9.3.2-2 American Society of Mechanical Engineers, Power Piping - ASME Code for Pressure Piping B31, ASME B31.1, New York, NY.

RAI 09.03.02-3, RAI 09.03.02-4, RAI 09.03.02-5, RAI 09.03.02-6, RAI 09.03.02-8, RAI 9.3.4-4

Figure 9.3.4-1: Chemical and Volume Control System Diagram

(Chemical and Volume Control System Module 1 with Module Heatup System Subsystem 6A Shown)

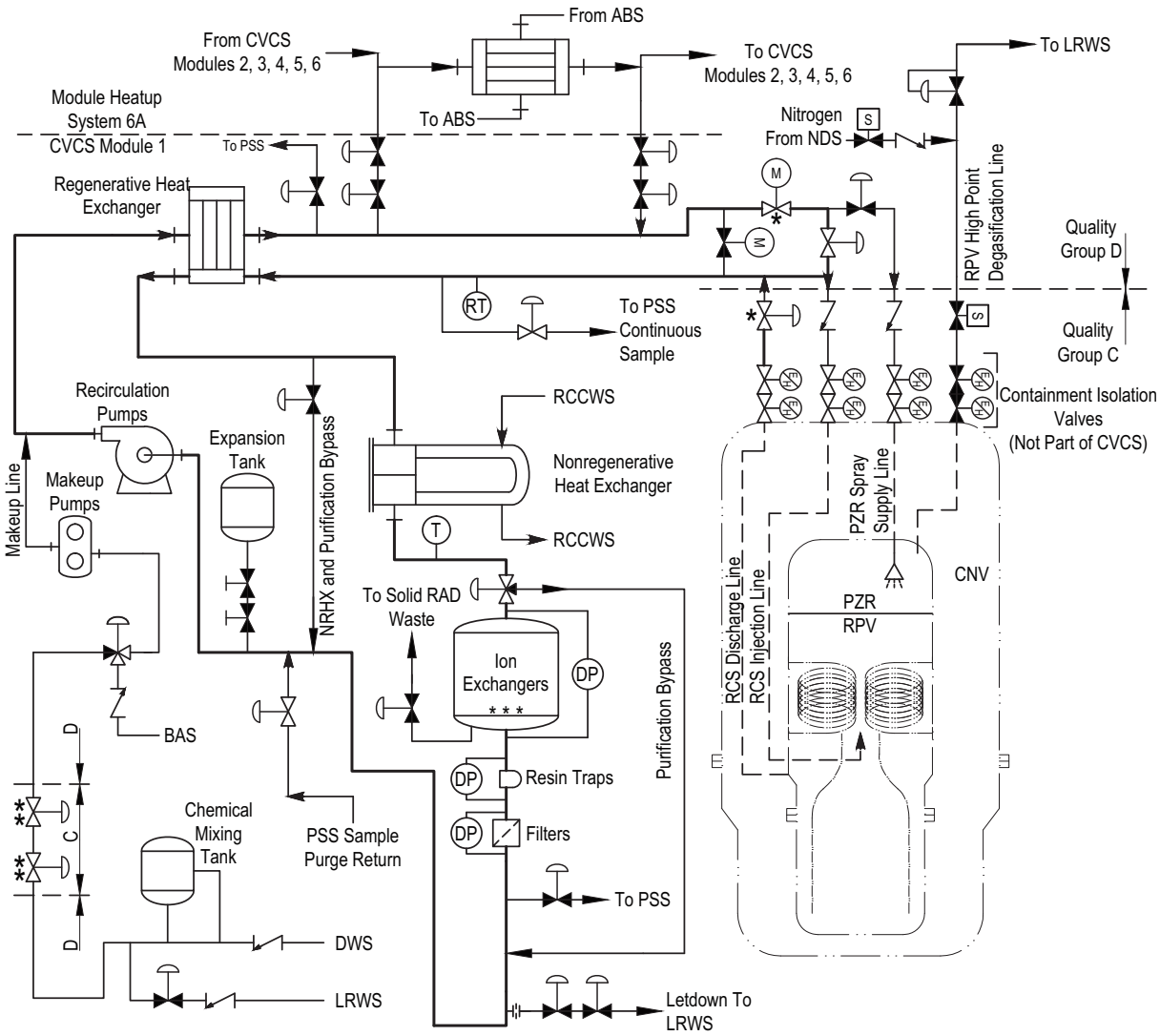

Notes:

1.) * Module isolation valve closes on detection of leak in CVCS/Process Sampling System (mass flow imbalance).

2.) ** Demineralized water isolation valve.

3.) Simplified diagram - not all equipment shown.

4.) *** Quantity four ion exchangers as follows: 2 mixed bed, 1 auxiliary, 1 cation

RAI 09.03.02-3, RAI 09.03.02-4, RAI 09.03.02-5, RAI 09.03.02-6, RAI 09.03.02-8

Figure 9.3.6-2: Containment Flooding and Drain System Diagram

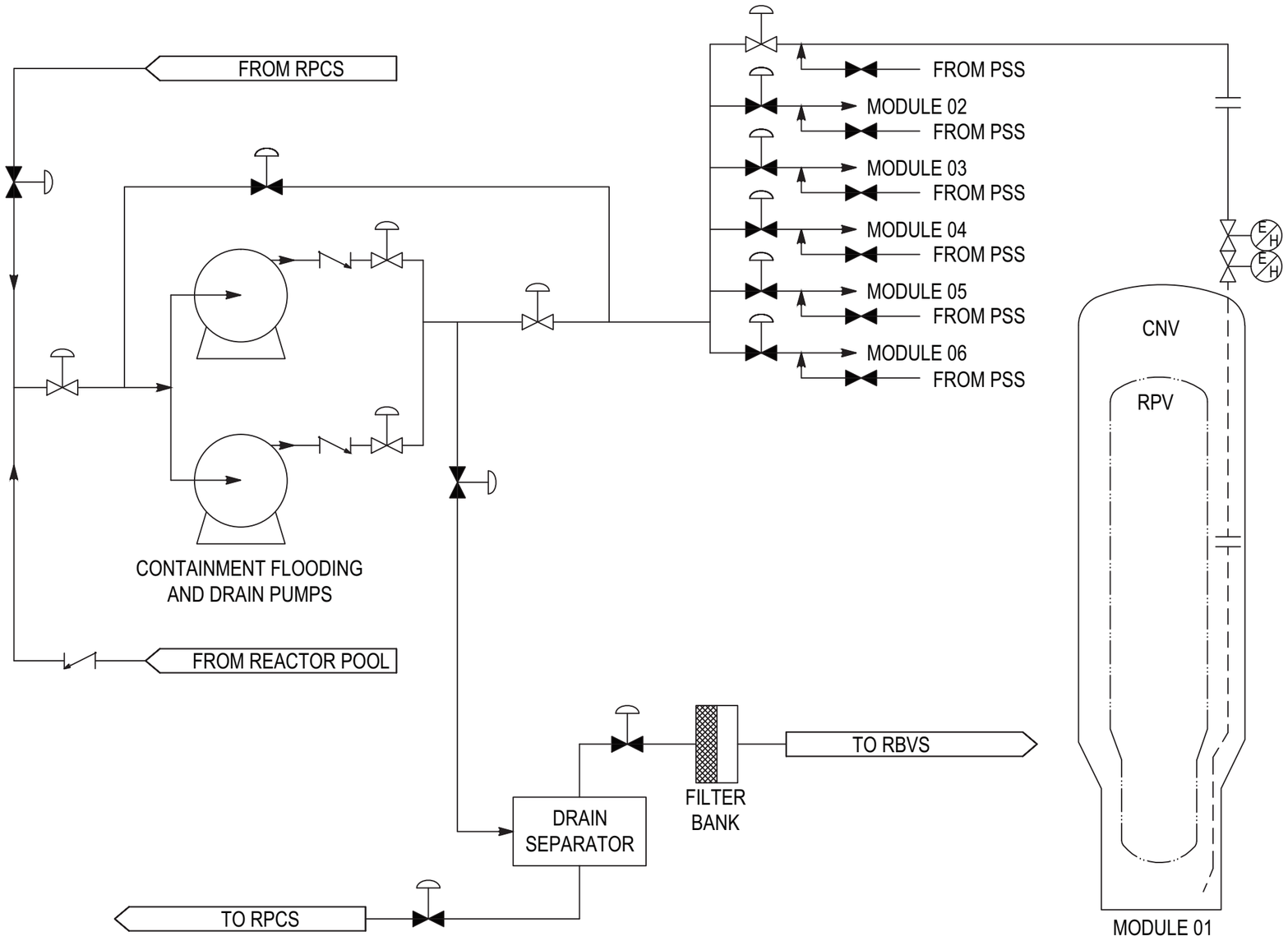

12.3.1.1.11 Charcoal Beds

The redundant series of charcoal beds of the gaseous radioactive waste system are located in individual shielded cubicles.

The removal of activated charcoal from charcoal beds is done remotely to minimize the occupational exposures to plant personnel.

Radiation detectors monitor each charcoal bed cubicle for gas leaks.

12.3.1.1.12 Sample Stations

RAI 09.03.02-3, RAI 09.03.02-4, RAI 09.03.02-5, RAI 09.03.02-6, RAI 09.03.02-8

~~Sample stations are designed with appropriate ventilation and shielding to minimize occupational exposures.~~Radiation protection design features are incorporated into the design of sample stations for radioactive fluid.~~Local sample points are minimized, with most samples routed to shielded sample stations.~~Radioactive samples are routed to sample stations to minimize radiation dose from local sample points. Sample stations are shielded and are located in low-dose areas to minimize occupational exposures. Shielding of sample stations for radioactive fluid is achieved by routing sample lines in shielded pipe chases to the extent practical and locating sample coolers behind the concrete and steel partition wall as necessary. Reactor coolant grab sample stations are equipped with vent hood to reduce personnel exposure.

Sample stations contain flushing provisions with drains routed to the LRWS.

The laboratory and counting room are designed to provide low background radiation.

12.3.1.1.13 Material Selection

Proper material selection is an important factor to balance component performance while reducing the amount of corrosion and activation products generated. The use of materials containing cobalt and nickel is minimized to reduce the quantity of activation products. Ni-Cr-Fe alloys, such as Inconel, have a high nickel content that can become Co-58 when activated. Production of Co-58 and Co-60 are reduced by utilizing low nickel and low cobalt bearing materials, to the extent practicable.

In limited situations, the selection of materials containing higher percentages of cobalt (e.g., hard face materials) or nickel (e.g., Alloy 690TT steam generator tubing) is preferable from a design standpoint. In these cases, the additional generation of activation products is balanced against component reliability to achieve the lowest overall personnel exposure. These types of materials are used only where operating experience suggests that it is the preferred option. Alloy 690TT is the material used for steam generator tubing due to its high resistance to corrosion.