U.S. NUCLEAR REGULATORY COMMISSION

REGION V

Report No. 50-528/89-13, 50-529/89-13, 50-530/89-13 EA 89-88

Docket No. 50-528, 50-529, 50-530

License No. NPF-41, NPF-51, NPF-74

Licensee: Arizona Nuclear Power Project
P. O. Box 52034
Phoenix, Arizona 85072-2034

Facility Name: Palo Verde Nuclear Generating Station

Inspection at: Phoenix, Arizona

Inspection conducted: March 4-10, 16-20, and 27-31, 1989

Inspectors: D.F. Kirsch 3/28/89
D. F. Kirsch, AIT Team Leader Date
Chief, Reactor Safety Branch

W. P. Ang 3/28/89
W. P. Ang, Project Inspector, RV Date

J. L. Burdoin 3/28/89
J. L. Burdoin, Reactor Inspector, RV Date

D.F. Kirsch 3/28/89
for W. Tenbrook, Radiation Specialist, RV Date

Other Participating Inspectors:

M. Davis, Palo Verde Unit 3
Project Manager, NRR

T. Collins, Section Chief
Reactor Systems Branch, NRR

J. Knox, SELB, NRR

G. Lapinsky, LHFB, NRR

D. Coe, Palo Verde Resident Inspector, RV

A. D. Johnson, Enforcement Officer, RV

Approved: A E Chaffee for by phone con 4-19-89
R. P. Zimmerman, Acting Director Date
Division of Reactor Safety and Projects

Summary:

Inspection during the periods March 4-10 and March 16-20, 1989
(Report No. 50-528/89-13, 50-529/89-13, 50-530/89-13)

Areas Inspected: A special announced Augmented Inspection Team inspection was performed to determine and evaluate licensee activities related to the March 3, 1989 Unit 3 loss of offsite power and subsequent reactor trip. Inspection procedure 93800 was used as guidance for the inspection.

Results:

Several potential violations were identified by the AIT during the review. These enforcement issues will be the subject of separate correspondence.

General Conclusions and Specific Findings

The team found that three significant system failures occurred during this event: (1) half of the Steam Bypass Control System malfunctioned, initiating the transient; (2) the Atmospheric Dump Valves (ADV) failed to operate from the control room, further complicating the licensee's ability to mitigate the effects of the transient; and (3) the Emergency Lighting in the Main Steam Support Structure rooms, housing the ADVs, failed, significantly hampering operators in their attempts to cope with failure of the ADVs to operate from the control room.

Each of these failures had clear precursors which the licensee did not recognize and responsibly correct. The cause for the Steam Bypass Control System failure was detected but not corrected in July, 1988. The unreliability of the ADVs was recognized as early as 1985, never finally corrected, and resurfaced in July, 1988 without effective corrective action being taken. The Emergency Lighting preventive maintenance and testing was waived for five consecutive quarters.

These breakdowns are the direct result of the failure of ANPP management to set a standard which demands that problems be recognized, and expeditiously evaluated and resolved. Further, these breakdowns are symptomatic of management's willingness to accept less than adequate technical work and attention to detail, and, by these actions, making these inadequacies a part of the Palo Verde culture.

Further contributing factors to each of these failures are identified below.

a. The atmospheric dump valves (ADV) did not operate as designed when called upon. Contributing factors are:

(1) the ADVs have a history of poor reliability and problems which were never adequately evaluated and finally resolved by the licensee;

(2) recommendations for design modification by the manufacturer, architect engineer, and consultants to correct ADV reliability problems were not implemented by the licensee;

(3) the nitrogen pressure regulators, supplying nitrogen for ADV operation, have a history of unreliability and problems which were never adequately resolved by the licensee;

(4) annual preventive maintenance recommendations by the vendor had not been implemented;

(5) the simulator does not effectively model plant ADV response, providing negative operator training;

(6) inadequate training of Auxiliary Operators (AO) in the manual operation of ADVs;

(7) AOs are not trained to operate the Remote Shutdown Panel, an activity requiring an NRC Reactor Operator license;

(8) procedures for local manual operation of the ADVs were not adequate;

(9) the handwheel operating directions for valves at the local operating station were not consistent and confusing to operators;

(10) important valves were not labeled or adequately location referenced in the procedure creating operator confusion.

b. The emergency lighting system did not operate as designed when called upon. The ADV rooms were dark because the emergency lighting units did not operate at all. Contributing factors are:

(1) preventive maintenance tasks have a history of being waived and not accomplished for more than a year;

(2) even if the battery operated emergency lighting units had operated, the lighting was not adequate for operators to perform the manual ADV operation tasks;

(3) emergency battery operated lighting units were not tested to verify conformance to eight hour requirements.

c. The Steam Bypass Control System (SBCS) had a history of poor reliability at the site which the licensee has not adequately resolved. For example:

(1) a previously observed failure of the same SBCS timer card in July 1988 was not resolved by the licensee;

(2) except for monthly exercise of the valves, calibration and functional testing of the system electronics is only performed at an 18 month frequency, diminishing the opportunity to identify electronic failures or misadjustments until the system is called upon to operate; and

(3) certain critical preventive maintenance tasks are only performed at biannual intervals.

d. Repeated interruptions of forced reactor coolant flow have occurred. The design of the electrical distribution system for the reactor coolant pumps may need to be reassessed.

e. Communications between the control room staff, auxiliary operators, and radiation protection were either not accomplished, not crisp and clear, hampered by high noise levels in the ADV areas, or hampered by a high traffic volume on the single radio channel in use.

TABLE OF CONTENTS

Inspection Details

I. Introduction-Formulation and Initiation of the Augmented Inspection Team (AIT)

A. Background and Formation of AIT

On Friday, March 3, 1989, Unit 3 at Palo Verde Nuclear Generating Station declared an Unusual Event (UE) at 0139 hours, MST, following a loss of non-Class 1E 13.8KV busses (S01 and S02) powering the Reactor Coolant Pumps (RCPs).

Unit 3 was operating at about 98% power when a fault at a California substation resulted in the opening of the breakers in the Palo Verde switchyard to isolate the Devers off-site line from the switchyard. Shortly thereafter, the Unit 3 main generator switchyard tie breakers opened as a result of the actuation of a main generator protective relay.

This large loss of load resulted in the initiation of a Reactor Power Cutback signal, to reduce reactor power, and a Quick Open signal to all eight Steam Bypass Control System (SBCS) dump valves, to remove excess reactor coolant system heat. Four of the SBCS dump valves malfunctioned and cycled from 100% open to about 10% open nine times, creating an excessive steam demand on the steam generators. The result of this malfunction was that the pressure in Steam Generator No. 2 decreased low enough to initiate a low steam generator pressure (920 psi) reactor trip signal and main steam isolation valve (MSIV) isolation signal. The excessive steam demand, caused by the malfunctioning SBCS system, caused a cooldown of the Reactor Coolant System (RCS), resulting in a shrinking induced pressurizer level decrease (to a low of about 13%) and a corresponding decrease in pressurizer pressure to the Safety Injection Actuation System (SIAS) actuation (1860 psia), resulting in a Safety Injection Actuation and Containment Isolation Actuation System (CIAS) actuation.

Questions regarding the response of several non-safety related and safety related components resulted in the NRC's formation of an Augmented Inspection Team.

On the morning of Friday, March 3, 1989, the Regional Administrator, after further briefing by the Regional and Resident staff, and consultation with senior NRC Headquarters Management, directed the dispatch of an Augmented Inspection Team (AIT), headed by the Region V Reactor Safety Branch Chief, and issued a Confirmatory Action Letter to ANPP (See Appendix A).

B. AIT Inspection Plan-Initiation of Inspection

An inspection plan was prepared by the designated Team Leader on March 3, 1989, and promulgated by the Regional Administrator on March 6, 1989.

The members of the AIT arrived at the Palo Verde Site on March 4, 1989. Site specific training for certain team members was completed during the morning of March 4, 1989, and the special inspection commenced with a meeting with licensee management (Entrance Interview) at 8:00 am, MST, and a tour of the Unit 3 facility quarantined problem areas in the afternoon. This tour allowed the team to verify the licensee's initiation of adequate quarantine measures, for equipment suspected of malfunction, and first hand observation of the state of that equipment.

C. Persons Contacted

(See Appendix B)

II. Licensee Response to Confirmatory Action Letter

The Confirmatory Action Letter (CAL) (Appendix A) included, among other actions, that the licensee develop a plan for investigating the event and present it to the NRC prior to beginning troubleshooting on certain equipment (eg: establish a quarantine list). Further, the CAL confirmed that the licensee would conduct a thorough investigation and obtain a full understanding of the March 3, 1989, Unusual Event and define the pre and post-restart corrective actions needed.

In implementation of the above, the licensee established an Incident Investigation Team to conduct activities as specified by the following procedures:

Procedure No.	Title
79PR-OI P01, Rev. 0	PVNGS Incident Investigation Program
79AC-OI P01, Rev. 0	Incident Investigation - Category 1 and 2 Incidents
79AC-OI P04, Rev. 0	Human Performance Evaluation
79AC-OI P05, Rev. 0	Incident Investigations Action Tracking and Distribution
79DDP-OI P01,Rev. 0	Incident Investigation Report Preparation

In addition, the licensee established a procedure for controlling equipment in quarantine and an equipment quarantine list. The inspector reviewed the above documents and concluded that these formed an acceptable basis for the conduct of the licensee's investigatory activities.

The licensee then developed Guidelines for Development of Troubleshooting Action Plans on Quarantined Equipment During Unit 3 Investigation. This document further made specific personnel assignments to the following evaluation teams:

- o Electrical Evaluation Team
- o Sequence of Events Evaluation Team
- o Steam Bypass Control Evaluation Team
- o RCS Leakage Evaluation Team
- o BOP Evaluation Team

Each team included a representative of the corporate Nuclear Engineering Division. The document further defined the minimum requirements that each action plan include and contain. The inspector reviewed this document and concluded that it specified an acceptable process for the conduct of troubleshooting definition.

Quality Audits and Monitoring personnel had selected the important action plans for independent assessment for adequacy and had developed appropriate plans. Quality Control personnel will be present during all troubleshooting/testing activities in implementation of troubleshooting action plans.

A Quality Assurance (QA) Team gave a briefing to the AIT Inspectors on March 17 outlining QA's involvement in the review of Unit 1 trip/restart program (see p. 19), and in the review of the March 3, 1989, Unit 3 trip.

The QA involvement in the review of Unit 1 trip/restart is in the following areas:

- 13.8 KV breaker NAN-S02A failure to trip,
- condensate pump CDN-P01B low flow problem,
- secondary plant water hammer, and
- emergency lighting.
- ADV testing

The QA involvement in the Unit 3 trip is in the following areas:

- sequence of events,
- operation of ADVs,
- electrical systems, and
- SBCS and turbine bypass valves; and
- radiation/chemistry concerns.

The team concluded at the end of the briefing that he had a better understanding of QA's involvement in the post trip activities and at this time had no problems or concerns with their programs.

III. Description of Unit 3 Event

A. Overview of Event

The Augmented Inspection Team (AIT) conducted individual interviews with licensee personnel directly involved in the event, including members of the operating crew as well as management/supervisory and support personnel involved following the event. Transcripts were maintained of interviews with the auxiliary operators. Facility

records (charts, logs, written statements, etc.) were examined, and discussions were held with licensee operations, engineering, maintenance, quality control, and investigative personnel. From these records and discussions, the following overview of the event was constructed, as well as the detailed Sequence of Events presented in paragraph B below.

Unit 3 began the night shift (nominally 7:00 pm to 7:00 am) on March 2, 1989, at approximately 97% power. No major activities were in progress.

Reactor power was limited to 98.2% by Technical Specifications due to one inoperable Main Steam Safety Valve (MSSV) on No. 1 Steam Generator (SG), SGE-PSV-574. This valve was previously declared inoperable after failing a lift pressure setpoint surveillance. Several other MSSVs remained to be tested prior to the refueling outage scheduled to start on March 8, 1989.

At 0102 (MST), Unit 3 experienced a large load rejection when the main generator output breakers tripped open upon demand of the sub-synchronous oscillation relay (SSO) which monitors generator output for evidence of excessive torsional stresses on the generator and turbine shafting, and on other related mechanical components. Immediately prior to the operation of the SSO relay, two 525 KV breakers, feeding one of four off-site transmission lines, tripped open due to a phase to ground fault near the Devers substation in California. Although all three Palo Verde nuclear units were operating near full capacity at the time of the fault, Unit 3 was the only one affected by the transmission line feeder breaker trip.

All Palo Verde units were designed to withstand a 100% load rejection without a reactor trip or turbine trip. This design anticipated that a generator trip would result in reactor power being reduced to approximately 50% with main generator power being supplied to in-house non-class loads, including Reactor Coolant Pumps (RCPs). The Steam Bypass Control System (SBCS) would dump main steam directly to the condenser to the extent necessary to stabilize reactor power and hold it at approximately 50%. However, during the event under discussion, an SBCS malfunction caused four out of eight steam dump valves to cycle between 10% and 100% open. These four valves dumping steam to the condenser represent approximately 40% of full steam demand. In addition, the remaining four SBCS valves also cycled between 80% and 100% open at the same time. This cycling action occurred over approximately 90 seconds and, although reactor power oscillated slightly around mean values ranging from 55% to 60%, steam generator pressures dropped as heat energy continued to be removed from the Reactor Coolant System (RCS) by excessive steam flow from the steam generators. The reactor tripped on low No. 2 SG pressure (Setpoint 919 psia), and since the Main Steam Isolation Signal (MSIS) also has the same setpoint, an MSIS occurred.

The MSIS closed the Main Steam Isolation Valves (MSIVs) and thereby terminated the excessive steam demand condition. At this time the RCS had been cooled to approximately 545 degrees F cold leg temperature and 580 degrees F, hot leg temperature. Primary pressure was also low at the time of the reactor trip (1920 psia) due to the decreasing pressurizer inventory during RCS cooldown. The effect of the reactor trip was to substantially remove further nuclear heat input to the RCS and cause a continued and more rapid decrease in RCS temperature and pressure. This resulted in RCS pressure decreasing with a Safety Injection Actuation Signal (SIAS) (setpoint 1837 psia) and associated Containment Isolation Actuation Signal (CIAS) were received. The minimum observable RCS pressure was approximately 1860 psia and within a few seconds following SIAS, RCS pressure, temperature, and inventory began increasing toward normal-post-reactor-trip values.

The reactor trip concurrently initiated a turbine trip and as the turbine speed decreased, the main generator frequency also decreased. Since the main generator was still connected to in-house non-class busses NAN-S01 and NAN-S02, the reduced bus frequency and voltage were less than off-site grid frequency and voltage and the fast transfer of these busses to an off-site source was prevented from occurring, as per the system design. The bus supply breakers tripped on under-voltage and power was thus lost to RCP's, Circulating Water Pumps (CWPs), Nuclear Cooling Water Pumps (NCWPs), Instrument Air Compressors (IACs), Normal lighting, some control room instrumentation including radiation monitoring displays (only Control Room display was lost, Class 1E powered monitors remained operable), and containment temperature, humidity, and radwaste sump levels.

The resulting loss of RCP's and the closure of MSIVs placed RCS heat removal in a natural circulation mode using safe-shutdown Atmospheric Dump Valves (ADVs) and Auxiliary Feedwater (AFW) pumps. Operators attempted to establish steam generator heat removal in this mode by opening ADVs from Control Room controllers. These valves have no automatic control. Based on the valve position indications from these controllers, Control Room Operators concluded that ADVs were not responding to the demand signals provided. Operators attempted to transfer control of the ADVs to the Remote Shutdown Panel (RSP), but again concluded the ADVs were not opening in response to controller demand signals. A second attempt to open ADVs from the Control Room was unsuccessful. Control Room Operators then sent Auxiliary Operators (AOs) into the Main Steam Support Structure (MSSS) to operate the ADVs in the manual hand-wheel mode. During subsequent attempts to gain control of ADVs, Steam Generator Safety Valve MSSV 579 on No. 1 SG lifted several times. The escape piping for the MSSVs is directly adjacent, and in close proximity to the ADVs. Auxiliary Operators were hampered in their attempts to place ADVs in manual hand-wheel control by several separate occurrences, described below.

There was no lighting of any significance when operators first entered the MSSS. Normal lighting was lost (due to the loss of NAN S01 and S02 switchgear). Battery backup emergency lighting was not adequately positioned in the North MSSS room to provide adequate lighting for the operators to perform their required activities, and was not functioning at all in the South MSSS room. Preventive maintenance had not been performed on these MSSS Emergency Light fixtures for nearly two years due to an administrative oversight. Subsequent attempts to restore essential lighting (from Class 1E power sources) in the MSSS were ineffective in one of the two rooms (South room, housing No. 2 SG ADVs) because of a burned out light bulb. In addition to the darkness and noise, AOs had received no training on ADV manual operation since an oral "check out" discussion during initial qualification. For most, this was more than two years ago. Posted instructions were read and followed with flashlights. Instrument air valves which had to be repositioned were not referenced by number in the procedure and one instrument air valve was not labeled. The ADV operator equalizer valves, referred to in the procedure, were neither labeled nor was the open/close operating lever position clear. In spite of these obstacles, AOs gained control of ADV 178 on No. 1 SG without problems. However, several problems were encountered while taking control of ADV 179 and ADV 185 on No. 2 SG (in the dark South MSSS room).

First, AOs attempted to manually over ride and open ADV 185, but were unable to get it more than 3% open when the handwheel came off due to a loose set screw. Operators just finished manually over riding ADV 179 when another AO arrived with tools. For a short time, ADV 179 was left closed while attempts were made to remedy the ADV 185 handwheel problem. Following an MSSV lift, operators returned to ADV 179 and attempted to open it by turning the handwheel clockwise, which was the direction required to open ADV 185. However, because of valve/handwheel orientation the open direction for ADV 179 was counter clockwise. When they were unsuccessful in opening ADV 179 by hand, and believing the repeated lifting of an MSSV warranted more extreme actions, operators used a 24 inch pipe wrench for mechanical advantage and succeeded in rotating the handwheel approximately one full turn before causing significant manual operator damage, rendering ADV 179 inoperable.

Subsequent attempts to restore the handwheel to ADV 185 were successful, and operators were able to gain manual control of this valve, although the valve moved only with great effort and, at one point, a clevis pin which connects the manual mechanism to the valve stem extension, chipped the stem extension and flew off in the dark. This required using the ADV 179 clevis pin to restore ADV 185 manual operation.

During efforts to achieve manual control of ADVs, control room operators reported the MSSV 579 was lifting at steam generator pressure below its setpoint of 1250 psia. Lifts at 1220 psia and 1200 psia were observed and appear to be consistent with Transient Data Acquisition System (TDAS) charts reviewed following the event. Natural circulation conditions were verified.

Manual operation of ADVs continued until approximately 0230 when operators were able to open bypass valves around the MSIVs and utilize two SBCS dump valves that exhaust to atmosphere. These valves were easily controlled from the control room. Operators initially could not open 1 SG MSIV bypass (SG-V169) from the control room apparently due to high differential pressure across the valve seat. This valve was manually jacked open. The operators had not first closed the downstream manual throttle valve, as required by the Main Steam System operation procedure, prior to attempting to open SG-V169 from the control room. Once the downstream steam lines were re-pressurized, the #2 SG MSIV bypass was able to be opened from the control room.

When power was restored to the containment radwaste sump level indicators at 0150, operators noted the east sump increasing at approximately 3 gpm. The source of this leakage was unknown, although operators noted an apparent degradation of the #2 seal on RCP 1B and recognized the potential relationship between these observations. Operators were able to reset all ESFAS signals, restore letdown, and restore offsite power to NAN-S01 and NAN-S02. RCP's 1A and 2A were both in operation at 0455. Subsequent plant operations proceeded without incident with the exception that RCP 2A was tripped at 0630 due to a high seal cooler inlet temperature.

Sequence of Events

03/03/89
Mountain Standard Time (MST)

TIME:	DATA SOURCE:	EVENT:
	TDAS STRIP CHART ALARM TYPER PERSONAL STATEMENT CR LOG OPERATOR INTERVIEW	Initially at 98% power. No activities in progress.
01:02:18	ALARM TYPER	Single phase to ground fault at Devers Valley Switchyard (See Attachment 1) 525 KV breakers 922 and 712 trip open (Time T_).
T_+5 Cycles	OSCILLOGRAPH	Palo Verde 525 KV Devers transmission line feeder breakers 992 and 995 trip open (See Attachment 1).
T_+16.5 Cycles	OSCILLOGRAPH	Palo Verde Unit 3 main generator 525 KV output breakers open due to a sub-synchronous oscillation relay (SSO) trip signal. This trip signal was not expected.
01:02:18	ALARM TYPER	Turbine control for Unit 3 main generator shifts to Power/Load Unbalance mode which begins closing turbine control and intercept valves to maintain generator output frequency near synchronous with the grid. Generator is supplying Unit 3 in-house loads only.

Sequence of Events

03/03/89
Mountain Standard Time (MST)

TIME:	DATA SOURCE:	EVENT:
01:02:19	ALARM TYPER	Large load rejection causing rapid decrease in main steam flow generates Steam Bypass Control System (SBCS) quick open demand signal to all eight SBCS valves. A Reactor Power Cutback (RPC) signal is generated by SBCS (by design causes partial control rod insertion).
	TDAS	Due to SBCS failure, 4 out of 8 SBCS valves cycle between 10% to 100% open ten times over the next 90 seconds. Other 4 valves cycle between 80% to 100% open at the same frequency.
	TDAS	During the next 90 seconds Reactor Power experiences 3% oscillations centered around values ranging from 56% to 60% in response to SBCS valve oscillations, and steam generator (SG) pressures decrease due to excessive steam demand.
01:03:48	ALARM TYPER AND TDAS	Reactor Trip and Main Steam Isolation Signal (MSIS) due to Low No. 2 (SG) pressure of 920 psia (Trip setpoint is 919 psia for both Reactor Trip and MSIS). No. 1 SG minimum pressure reached was 928 psia. No. 2 SG minimum pressure reached was 916 psia.
	ALARM TYPER	Turbine trip occurs due to Reactor Trip. Main Generator is still supplying power to Unit 3 non-class in-house loads (13.8 KV busses NAN-S01 and NAN-S02) as turbine coasts down (per design).
	TDAS	T-hot, which was approximately 580 degrees F and decreasing at the time of the reactor trip, now rapidly decreases due to the trip. RCS pressure, which was approximately 1920 psia and decreasing with RCS temperature, now also rapidly decreases as RCS inventory contracts.

Sequence of Events

03/03/89
Mountain Standard Time (MST)

TIME:	DATA SOURCE:	EVENT:
01:03:58	CONTROL ROOM STRIP CHART	SIAS and CIAS occur due to low RCS pressure of approximately 1860 psia (trip setpoint is 1837 psia for both SIAS and CIAS). This removes ADV room essential lighting circuits from Class 1E power by stripping these nonessential loads from Class 1E buses.
	STRIP CHART TDAS TDAS STRIP CHART STRIP CHART (SHA-TR-3)	Lowest observable RCS pressure = 1860 psia Lowest observable T hot = 558 degree F Lowest observable T cold = 545 degree F Lowest observable pressurizer level = 13% Lowest observable saturation margin = 28 degree F
		Within a few seconds following SIAS/CIAS initiation, RCS pressure and temperatures, pressurizer level, and saturation margin begin increasing in response to the termination of steam flow following MSIS. Minimal high pressure safety injection flow occurred (HPSI pump shutoff head = 1850 psia).
01:04:09	ALARM TYPER	RCS Low Flow reactor trip signals occur from the Plant Protection System, due to Reactor Coolant Pump coast down following loss of busses NAN-S01 and NAN-S02 (noted above).

(Continued)

Sequence of Events

03/03/89
Mountain Standard Time (MST)

TIME:	DATA SOURCE:	EVENT:
01:04:09 (Continued)	PERSONAL STATEMENTS AND INTERVIEWS	Busses NAN-S01 and NAN-S02 are prevented from automatically fast transferring to their off-site power source following main turbine trip due to insufficient synchronization of the busses with the off-site source.
		Loss of the 13.8 KV non-Class in-house power resulted in de-energizing the following loads, among others: - RCP's - Nuclear Cooling Water Pumps - Circulating Water Pumps - Normal Lighting - All Control Radiation Monitor System (RMS) Displays (Control Room and RP area). - Containment temperature, humidity and radwaste sump level indication in the Control Room. - Instrument Air Compressors
01:05 (Approximately)	CONTROL ROOM LOGS AND PERSONAL STATEMENTS AND INTERVIEWS	Control Room operators noted the ADVs were apparently not responding to Control room demand signals. These valves have no automatic control. All ADVs were given their permissive signals and a 15-20% open demand signal, and were not seen to move by Control room indications (either by controller analog position or position indication lights). Also, one ADV (184) control room controller analog position indication was stuck at approximately 50% open and was a recognized and tagged deficiency.

(Continued)

Sequence of Events

03/03/89
Mountain Standard Time (MST)

TIME:	DATA SOURCE:	EVENT:
01:05 (Continued)		Control room operators trip two out of four RCP's (RCP's 1B and 2B) due to SIAS in accordance with emergency procedures.
01:06::00	DIGITAL FAULT RECORDER	Generator trip due to volts/hertz generator trip. Loss of the 13.8 KV non-Class in-house power resulted in de-energizing the following loads, among others: - RCP's - Nuclear Cooling Water Pumps - Normal Lighting (including ADV room) - All Control Radiation Monitor System (RMS) Displays (Control Room and RP area). - Containment temperature, humidity and radwaste sump level indication in the Control Room - Instrument Air Compressors (This initiates rapid reduction in air pressure to 64 psi in about two minutes impacting ADVs.)
01:07:45	ALARM TYPER	Instrument Air Low Pressure Alarm (Setpoint 95 psig).
01:08:42	ALARM TYPER	Nitrogen backup to instrument air system isolation valve open (Setpoint 85 psig on instrument air).
01:10 (Approximately)	TDAS	MSSV 579 lifts at approximately 1210 psia (Setpoint is 1250 psia)
01:14	CONTROL ROOM LOGS	Isolated RCP seal bleed off to RCP's.
01:14:45	ALARM TYPER	All RCP Controlled Bleedoff Flow Low Alarm due to isolation of bleedoff flow.

Sequence of Events

03/03/89
Mountain Standard Time (MST)

TIME:	DATA SOURCE:	EVENT:
01:17:54	RCP	Controlled Bleedoff Flow Normal (postulated due to relief isolation valve CHV-507 failing open on low instrument air pressure, allowing flow through relief valve (PSV-199).
01:20	TDAS	Steam Driven AFW pump (AFA-P01) started to assist with steam generator heat removal.
01:26 (Approximately)	PERSONAL STATEMENTS AND INTERVIEWS	Control Room operators directed the actions of an Auxiliary Operator (AO) at the Remote Shutdown Panel (RSP) to attempt control of ADVs from that location. It should be noted here that Auxiliary Operators are not trained to operate the RSP; this activity is the responsibility of licensed operators. Following Control Room direction, the AO correctly transferred ADV 178 to manual at the RSP and inserted a 30% open demand signal. The demand signal was applied for "a few minutes" before it was removed. The other 3 ADVs were transferred to manual local control then all ADVs were transferred back to Control Room control. Only ADV 178 was given a demand signal from the RSP. A second attempt to operate ADVs from the Control Room was also unsuccessful.
01:30 (Approximately)	PERSONAL STATEMENTS AND INTERVIEWS	The first two AOs enter the North room in the Main Steam Support Structure (MSSS) containing ADVs 184 and 178 for SG No. 1. Although they experienced difficulty due to; 1) no lighting 2) no labeling on valves needing to be repositioned (operators had to hand trace instrument air lines to locate equalizing and isolation valves), and 3) periodic lifting of Main Steam Safety Valve (MSSV) 579, they were able to line up manual control for ADV 178 according to posted instructions and manually open to approximately 7% upon Control Room direction.

Sequence of Events

03/03/89
Mountain Standard Time (MST)

TIME:	DATA SOURCE:	EVENT:
01:35 (Approximately)	PERSONAL STATEMENTS AND INTERVIEWS	The third AO enters the MSSS and, seeing that SG No. 1 North room was manned, proceeded to SG No. 2 South room where ADVs 179 and 185 are located. This room was not lighted. The AO chose ADV 185 to operate since Control Room operators had specified only that one ADV per SG be placed in manual local, but had not specified which one. He completed the manual lineup procedure, by Flashlight, and started to open the valve when he realized the hand wheel was slipping on the actuator shaft. The ADV 185 hand wheel, when engaged in manual operation must be turned clockwise to open the valve. The ADV 185 hand wheel disengaged (free-wheeled) from the actuator shaft with the valve approximately 3% open and the valve would not open further.
01:35	PERSONAL STATEMENTS AND INTERVIEWS	A fourth AO heard on the radio that one of the ADV hand wheels was free-wheeling and started toward the MSSS with a box of tools. At about this time MSSV 579 on SG No. 1 lifted, creating considerable noise making radio communications difficult, in the area of the ADVs. The third AO decided to re-direct his efforts and gain manual control of ADV 179. He advised the Control room of this intent and proceeded to align ADV 179 for manual operation. He had just completed placing ADV 179 in manual when the fourth AO arrived with the tools. The third AO paused while the fourth AO attempted to restore ADV 185 hand wheel engagement and further open the valve. During this time MSSV 579 lifted again and the third AO re-directed attention back to ADV 179 which was ready for manual operation. It should also be noted that following the lifting of MSSV 579 there was steam in the room containing the ADVs, contributing to the confusion. ADV 179 hand-wheel open and close directions are opposite those of ADV 185 due to valve/hand-wheel orientation. The fourth AO attempted to open ADV 179 by turning the hand-wheel in the same direction, clockwise, used to open ADV 185. Failing to move the valve by hand, and believing the urgency of the situation required it, the fourth AO placed a 24" pipe wrench on the ADV 179 hand-wheel and at the direction of the third AO rotated the hand-wheel approximately one full rotation in the closed direction before the valve actuator broke, rendering ADV 179 inoperable.

Sequence of Events

03/03/89
Mountain Standard Time (MST)

TIME:	DATA SOURCE:	EVENT:
01:38	TDAS	MSSV 579 on No. 1 SG lifts (2nd time).
01:39	CONTROL ROOM LOGS	Operators declared an Unusual Event (NUE) based on the loss of 13.8 KV power to the NAN-S01 and NAN-S02 busses concurrent with SIAS on low RCS pressure.
01:48	TDAS	MSSV 579 lifts (3rd time).
01:53	TDAS	MSSV 579 lifts (4th time).
01:57	TDAS	MSSV 579 lifts (5th time).
02:07	TDAS	MSSV 579 lifts (6th time).
	CONTROL ROOM LOGS	Operators unsuccessfully attempted to open 1 steam generator MSIV bypass valve from the control room apparently due to the high differential pressure across the valve with the downstream piping de-pressurized.
02:18	TDAS	MSSV 579 lifts (7th time).
02:22	CONTROL ROOM LOGS	Operators successfully opened 1 steam generator MSIV bypass valve manually at the valve. It should be noted here that operators did not follow procedures in the Main Steam System Operating procedure for opening SG-V169. It was either during this manual jacking open process, or during the subsequent closure on the next shift that SG-V169 was damaged.
02:29	CONTROL ROOM LOGS	Operators started charging pump A.
02:30	CONTROL ROOM LOGS	Operators opened #2 steam generator MSIV bypass valve from the control room. Operators then began controlling steam generator heat removal from two SBCS valves which dump to the atmosphere. (Main condenser vacuum was lost due to loss of Circulating Water Pumps powered from S01 and S02).

Sequence of Events

03/03/89
Mountain Standard Time (MST)

TIME:	DATA SOURCE:	EVENT:
02:32	CONTROL ROOM LOGS	Bus S01 was reenergized from off-site source.
02:38	CONTROL ROOM LOGS	MSIS was reset.
02:39	CONTROL ROOM LOGS	Operators secured use of ADVs for steam generator heat removal.
02:41	CONTROL ROOM LOGS	SIAS and CIAS were reset.
02:43	CONTROL ROOM LOGS	Buss S02 was reenergized from its off-site source.
02:52	CONTROL ROOM LOGS	The Unusual Event was terminated.
02:52	CONTROL ROOM LOGS	Operators reestablished seal injection to all RCPs.
02:53	CONTROL ROOM LOGS	RCP 1B Bleedoff flow is zero.
02:55	CONTROL ROOM LOGS	RMS display in Control Room restored.
03:03	CONTROL ROOM LOGS	Isolated seal injection to RCP 1B.
03:05	CONTROL ROOM LOGS	Restored seal injection to RCP 1B.
03:15	PERSONAL STATEMENT	NRC resident arrived in the Control Room.
03:19	CONTROL ROOM LOGS	Isolated seal injection to RCP's 1A, 2A, 2B.
03:22	CONTROL ROOM LOGS	Isolated RCP bleedoff flow - all RCPs.
03:41	CONTROL ROOM LOGS	Established seal injection and RCP bleedoff flow for all RCPs.
03:43	CONTROL ROOM LOGS	Started NC pump A (Nuclear Coolin Water to RCP seals).
04:49	CONTROL ROOM LOGS	RCP 1A was restarted.
04:55	CONTROL ROOM LOGS	RCP 2A was restarted.

ATTACHMENTS:

1. AC Electrical Distribution

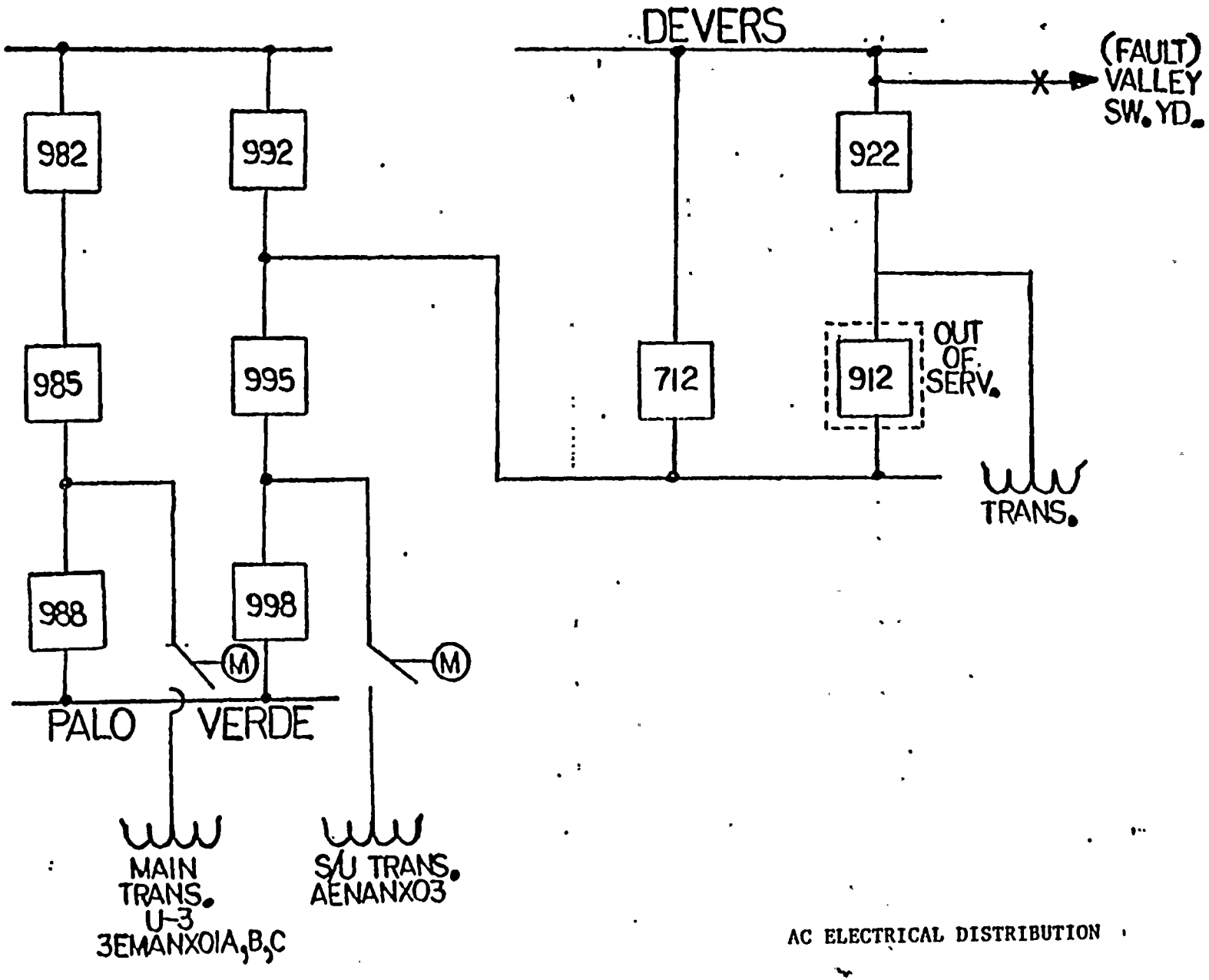

AC ELECTRICAL DISTRIBUTION

IV. Description of Unit 1 Event

Shortly after the AIT arrived onsite an event occurred at Unit 1 which contained lessons common to the Unit 3 event. At 10:01 on March 5, 1989, Palo Verde Nuclear Generating Station (PVNGS) Unit 1 tripped from 100% reactor power due to a Control Element Assembly Calculator (CEAC) failure. The reactor trip initiated a turbine/generator trip and fast bus transfer of station loads from the Unit Auxiliary Transformer to the Startup Transformers. The fast bus transfer was unsuccessful for 13.8 KV bus NAN-S02 because the normal feeder breaker did not trip as required. This resulted in the loss of power to two Reactor Coolant Pumps (RCPs) and various other plant components. In addition, a fire was observed and subsequently extinguished on the trip coil of the normal feeder breaker for NAN-S02.

The emergency operations procedure was entered and the plant was stabilized in Mode 3. The event was declared an uncomplicated reactor trip, therefore no emergency classification was required.

Secondary plant shutdown was then initiated along with restoring power to electrical bus NAN-S02. As the main feedwater an condensate systems were placed in long path recirculation, water hammer was observed in the heater drain system. Long path recirculation was secured.

During the re-energization of NAN-S02, damage occurred to the RCP 1B and 2B 286 relay trip coils. Re-energization of the bus was halted until a determination of how the trip coils were damaged was performed.

This event was initiated by a failure of CEAC No. 2 processor board. The root cause has not been conclusively determined for NAN-S02A failing to trip when required. The most probable causes are either a slight armature linkage misalignment, trip coil degradation or the lack of a general breaker overhaul. The water hammer was caused by placing long path recirculation in service while High Pressure feedwater heaters were still at elevated temperature. The failure of the RCP 286 relay coils was attributed by the licensee to inadequate procedural guidance, training and the uniqueness of the RCP trip circuit design.

The trip coil for the normal feeder breaker to NAN-S02 was replaced. In addition, preventive maintenance (PM) was performed on the breaker in accordance with the vendor's technical manual. Short term action was to cycle the bus feeder and RCP supply breakers. The longer term action includes completion of required PM on all 13.8 KV breakers during the refueling outage. Additionally, PM procedures will be revised to better reflect the recommendations provided by the vendor.

The affected lines of the secondary systems that experienced water hammer were visually inspected. A design modification that will enhance the affected line's strength will be implemented. Design and procedural enhancements will be pursued to minimize future water hammer.

The RCP 1B and 2B 286 relay coils were replaced. Procedural enhancements and training will be provided to Operations Personnel to ensure that the uniqueness of the RCP trip circuit design is understood.

V. Equipment Status/Failures/Anomalies

A. Main Generator-Trip of Yard Breakers

During normal plant operation, electrical supply to safety related loads is provided from off-site via two separate and independent startup transformers. Electrical supply to plant non-safety related loads is provided by the unit (main) generator via one Unit Auxiliary Transformer (UAT). In the event of failure of the UAT, reactor trip, or turbine trip, automatic fast transfer will be initiated to provide a continuous electrical supply to plant non-safety related loads via startup transformers. This fast transfer occurs provided the startup transformer's electrical supply voltage is normal and is synchronous with the UAT's electrical supply voltage. Transfer of the off-site electrical supply from the UAT to the startup transformer for non-safety related loads may also be initiated by the operator from the control room.

On March, 3, 1989, at approximately 1:06 am, a phase "C" to ground fault occurred on the Devers to Valley switchyard transmission line. The fault occurred near the Devers switchyard causing switchyard breakers 922 and 712 to trip open. This trip occurred within 3 cycles (0.05 seconds) as designed. When the Devers 922 and 712 breakers opened, a transfer trip signal was generated and sent to the Palo Verde switchyard via microwave signal. The transfer trip signal initiated, in accordance with its design, a trip of breakers 992 and 995 in the Palo Verde switchyard. This trip occurred approximately 5 cycles (0.093 seconds) following the opening in the Devers breakers isolating the Palo Verde to Devers switchyard transmission line.

Operation of offsite transmission line protective relaying described above functioned in accordance with its design to isolate the faulted line. No unacceptable conditions were identified during the staff's review of this protective relaying.

Approximately 14.5 cycles (0.24 seconds) following opening of the Devers breakers, Unit 3 main generator breakers 985 and 988 received a trip signal. Two cycles (0.033 seconds) later, breakers 985 and 988 opened isolating the Palo Verde main generator and UAT from the off-site electric grid system in accordance with design.

Following main generator output breaker trip, the Palo Verde design will initiate the load rejection system i.e., automatic reactor power cutback and turbine run back systems. If the load rejection system functions as designed, the reactor and main turbine generator will continue their supply of electric power, at a reduced level, to non-safety loads through the unit auxiliary transformer. If the load rejection system fails, as occurred March 3, 1989, reactor and turbine trips would be expected. At this point transfer to offsite power isn't possible due to phase differences, etc., and a natural circulation situation would occur. During the March 3, 1989 event, reactor and turbine trips occurred approximately 90 seconds following the opening of the main generator breakers. The sources

for trip signals to the 985 and 988 breakers were investigated by the licensee. This investigation determined that these trip signals can originate from a manually initiated signal, a signal generated due to switchyard problems, or a signal originating from operation of one or more of the possible twenty-four generator trips at the Palo Verde station. Since manual operation and switchyard problems did not occur during the March 3, 1989 event, the trip signal was deduced to have originated from operation of generator trips at the Palo Verde station. The majority of these generator trips, in addition to initiating a signal to trip breakers 985 and 988, initiate a signal to other system components. During the March 3, 1989 grid disturbance the only system component which operated (i.e. received a generator trip signal) were the Palo Verde switchyard breakers 985 and 988. The only generator trips that will initiate a signal only to the Palo Verde switchyard breakers 985 and 988 are SSO-A and B (subsynchronous oscillation) and 186G-7-1 (generator backup distance). Because trip indicators were received for activation of SSO-A and B and not 186G-7 during the event, it was concluded that a Subsynchronous Oscillation (SSO) signal was the initiator for trip of switchyard breakers 985 and 988.

The Palo Verde Nuclear Power Station consists of 3-1270 MWe turbine generator units. Five 525 KV transmission lines connect the Palo Verde turbine generator units to load centers in the Phoenix, Los Angeles, and San Diego areas.

In order to minimize voltage drop over long transmission distances, two of the five lines have been series compensated. Capacitors have been applied in series with these lines to compensate for their length. These series compensated lines create a potential, if transmission system imbalance occurs, for resonant oscillations to be generated in each of the Palo Verde turbine generator units. If the system imbalance is subsynchronous (i.e., part of the transmission system is operating below its synchronous frequency of 60 cycles per second), resonant oscillation can occur on the drive shaft of the turbine generator. If the system imbalance is super synchronous (i.e., part of the transmission system is operating above its synchronous frequency of 60 cycles per second) resonant oscillation can occur on the tips of the turbine generator's blades. Resonant oscillation occurring in the turbine generator can cause significant damage and economic consequence.

In order to provide protection from the subsynchronous resonance (i.e., resonant oscillations), two relays designated as type SSO have been installed on each of the turbine generators at Palo Verde.

The SSO relay has recently been developed and built by Westinghouse. Similar protection for super synchronous resonance is being developed and is being considered by the licensee for future installation on the Palo Verde turbine generators.

Inputs to each SSO relay are taken from the electrical output of the main generator. These inputs include each of the three main generator phase currents and one of the main generator terminal

voltages. The synchronous complement of the three phase currents (generated electronically within the relay) approximates the subsynchronous component of electrical torque. This approximate torque is fed to nine different subsections contained within each of the two SSO relays. Within each subsection, different parameters of the approximate torque are monitored. If a predetermined combination of the parameters exceed calibration setpoints, an SSO relay pickup signal will be generated. Each of the nine different subsections can initiate pickup of its associated SSO relay. Pickup of either SSO relay transmits a trip signal to the Palo Verde switchyard breakers 985 and 988. Thus, failure or actuation of any one of the 18 subsections associated with the two SSO relays or spurious operation of either SSO relay could have initiated a trip of the 985 and 988 breakers.

The licensee was in the process of writing test procedures for investigating the cause of SSO relay actuation. The licensee estimates that they will be ready to start the investigative tests during the week of March 13 to 17, 1989.

Between November 1979 and January 1987, nineteen SSO relays have been installed on turbine generator units that supply electric power to the Arizona Public Service Co. (APS) distribution system. These nineteen installed relays, which include six relays installed at the Palo Verde units, have accumulated 105 years of operation as of March, 1989. During this time there have been nine actuations of the SSO relay three because of actual subsynchronous resonance, five because of relay failure (i.e., false trip), and one because of station battery problems. The three actual subsynchronous resonance actuations were the result of one grid-system disturbance on June 27, 1986.

Based on the above limited operation history of SSO relays, the following statements can be made:

a) One relay trip each ten years due to actual transmission system disturbance causing subsynchronous resonance conditions.

b) One relay trip every five years if one assumes that the March 3, 1989 grid disturbance was of a sufficient duration to cause subsynchronous resonance at Palo Verde.

c) One relay actuation every 17 years due to false trips and other causes.

d) One trip of the generator output breakers at Palo Verde can be expected every three years due to false trips and other causes.

e) If one assumes the March 3, 1989 SSO relay actuation was due to a false trip, one trip of the generator output breakers unit at Palo Verde can be expected every 2.5 years.

Palo Verde Unit 1 tripped due to false actuation of SSO relay on January 10, 1987. Based on the above observations, one would expect

a trip of the generator output breakers at one of the three turbine generator units at Palo Verde due to false actuation of an SSO relay during 1989. SSO relay actuation occurred during the March 3, 1989 event 2.1 year following the January 10, 1987 relay actuation. Trip of the generator output breakers at one of the three Palo Verde turbine generator units once per 2.5 years was expected and thus, apparently considered acceptable of APS management for Palo Verde.

The SSO relay, installed to protect the main turbine generator from subsynchronous resonance, is a non-safety system. No credit is taken for its operation during reactor accident mitigation. SSO relay actuation initiates a large plant/load unbalance condition which initiates a reactor and turbine run back. If the run back system fails, the reactor protection system will trip the reactor. SSO relay actuation is a contributor to reactor trip and can thus be considered an event initiator. With a trip of the generator output breakers expected at one of the three Palo Verde turbine generator units once every 2.5 years due to failure of the SSO relay, the subsynchronous resonance protection of the turbine generator can be considered a significant contributor to event initiation.

The licensee as part of their evaluation of SSO relay actuation on January 10, 1987, determined that if two out of three logic of the SSO relay were implemented at Palo Verde the probability of false SSO relay actuation would be expected once every 17,640 years. Thus, a trip of the generator output breakers at the Palo Verde plant site would decrease from once per 2.5 years to once per 5880 years.

Review of the events which have occurred at Palo Verde since October 1985 indicate that the load rejection system (i.e., automatic reactor power cutback and turbine run back systems) has only been actuated two times where the system was expected to pick up non-safety loads. Once during a load rejection test conducted on September 12, 1985 and the March 3, 1989 event. For each of these events, the turbine run back system was unable to maintain electric power to non-safety loads, the reactor was tripped, and even though off-site power was available, reactor shutdown was accomplished by natural versus forced reactor coolant circulation. When non-safety loads are normally powered from the main generator through the unit auxiliary transformer, the Palo Verde design appears to be vulnerable to loss of electric power to non-safety loads which necessitates plant shutdown without forced reactor circulation.

In addition, review of the events which have occurred at Palo Verde since October 1985 indicate that if non-safety loads are aligned to off-site power through the startup transformer and there is a single failure of the start up transformer (or actuation of the startup transformers protective relaying), reactor trip at two of the three Palo Verde units could occur. This type of event occurred at Palo Verde on August 6, 1986.

Following reactor or turbine trip, the automatic fast transfer system (installed at Palo Verde to provide a continuous source of electric power to non-safety loads) would be expected to initiate once the main generator's output voltage is at or below the transfer system's under voltage trip setpoint. During the March 3, 1989 event, initiation of the fast transfer occurred approximately 131 seconds following reactor trip at the system's under voltage trip setpoint. Initiation caused power from the main generator to non-safety loads to be disconnected in accordance with its design. At this point in the operation of the fast transfer system, the voltage, frequency and phase angle of the off-site system is compared to voltage, frequency, and phase angle remaining on the 13.8 KV bus that supplies non-safety loads. If the following conditions are met, electric power will be reconnected to the non-safety loads from the off-site transmission system through the startup transformers without any perceptible interruption of power.

1. Off-site voltage (bus S03 and S04 startup transformer) must be between 12 and 15.6 KV;

2. UAT voltage on the 13.8 KV bus (bus S01 and S02) that supplies non-safety loads must be greater than 3.45 KV;

3. The frequency difference between voltages cannot be greater than 8 cycles per second; and

4. The phase angle between voltages must be less than 35 degrees.

During the March 3, 1989 event, conditions 3 and 4, above, were not met. Therefore, automatic fast transfer was blocked, in accordance with design, causing loss of electric power to reactor coolant pumps and other non-safety loads.

The SSO relay actuation <u>only</u> opens the 985 and 988 breakers in the switchyard and does not cause a generator trip. Under normal circumstances when a reactor trip is initiated, a turbine trip is initiated. Without a driving force to the turbine the turbine-generator begins to slow down and the generator is tripped by the reverse power relay to protect the turbine against motoring of the generator. Actuation of the reverse power relay initiates a trip signal to (1) the breakers supplying power to S01 and S02 from the unit auxiliary transformer; (2) generator excitation; and (3) yard breakers 985 and 988. The fast bus transfer enabling signal is by an "early b" contact on the auxiliary transformer supply breakers to bus S01 and S02. The Closing signal to the breakers supplying power to S01 and S02 from S03 and S04 occurs only if the above conditions are met. The "early b" contact from the auxiliary transformer supply breaker is used to permit the closing of the bus-tie breaker, thus minimizing dead bus time. The fast bus transfer is designed to occur within 6 cycles and normally occurs at about 3 cycles.

During the March 3, 1989 event, the reactor/turbine trip occurred after the opening of yard breakers 985 and 988. This started a turbine/generator coastdown (the reverse power relay did not actuate because yard breakers 985 and 988 were already open isolating the Unit 3 generator from the grid). The coastdown is a design feature to assure that the generator continues to supply reactor coolant pump motors while coasting down. Thus, the unit auxiliary transformer supply breakers to S01 and S02 did not receive an open signal, actuating the "early b" fast transfer enable logic until these breakers were tripped by the Volts per Hertz lockout relay. At this time the output voltage and frequency from the unit auxiliary transformer were so low (about 9 KV and 30 Hz, respectively) that fast transfer was precluded due to an inability to achieve synchronization.

Operators experienced some difficulty in resetting generator protective relay 186G-9 (Generator Voltage Regulator Trip) because the first operator at the scene was not well trained in the procedure for reset. The procedure for resetting relay 186G-9 requires calling/coordinating with a representative of the Protective Relaying and Control (PR&C) group prior to resetting Relay 186. The PR&C person contacted recommended that the Reactor Operator reset the relay since he wasn't sure what had initiated the 186 Relay trip. The relay immediately tripped again. The Shift Supervisor came in at this point and reset the under voltage/frequency relay, and the PSS comparator and generator trip (the initiating sources for the 186 relay trip). The 186 relay was then successfully reset and switchyard breakers 985 and 988 were closed after opening the Unit 3 motor operated disconnect switch.

The inspector concluded that although the fast bus transfer feature operated in accordance with the design, the design is susceptible to not working. Couple this with the fact that the bypass valves are unreliable, entry into natural circulation cooldown is a frequent result.

B. Inability to Remotely Operate Atmospheric Dump Valves

1. Description of Event

Main steam header isolation by automatic closure of MSIVs during the event necessitated opening atmospheric dump valves as a means of relieving steam pressure. The control room secondary plant operator (RO) energized ADV permissives and dialed in 15-30 percent open demand signals to the ADV positioners. The ADVs open lights did not indicate valve opening and secondary pressure did not respond. This was performed one at a time on all four ADVs after dialing in a zero demand signal for each valve after no response was obtained. Although the "ADV control not in CR" annunciator light was not on, the Control Room (CR) requested auxiliary operators (AO) to verify that the switches at the remote shutdown panel (RSP) were in fact in the CR control position.

The AO verified this and was subsequently instructed to cycle the switches to local and back to CR. This was performed in an effort to clear any electrical difficulties that the CR suspected might have occurred resulting from the loss of class power. The secondary RO again attempted to open all four ADVs one at a time with no success. The CR subsequently instructed the AOs to attempt to operate ADV-178 from the RSP with a 30% demand signal from the CR with no success. AOs were subsequently instructed to manually open the ADVs using handwheels at the valve. Using the instructions posted at each valve, the AOs isolated instrument air to the ADVs (with difficulty), equalized the remote air operating cylinders of the valves (with difficulty), and installed the "clevis" to manually engage the handwheels on three of the four ADVs (one ADV was not attempted to be engaged since only one of two ADVs per generator was needed). The AO then proceeded to eventually open ADV-178 and ADV-185. See other sections for difficulties in lining up for manual operation and for damage to ADV-179 and ADV-185. AO statement did not indicate problems with turning of handwheel for ADV-178. AO statements indicated ADV-185 handwheel turned hard but was opened up to 7% open.

Sequence of Events - ADVs

Alarm Typer

01:06:00	Air compressor A, B, C, trouble	00-125 psig
01:07:01	Instrument air dryer A trouble	
01:07:46	Instrument air header press low	95 psig
01:08:00	Backup N_2 to instrument air header open	85 psig
01:11:18	ADV Train "B" control not in CR	
01:18:42	SG 1 line 1 ADV accumulator press low	(N_2 less than 600 psig)
01:26:20	ADV Train "A" control not in CR	
01:26:22	ADV Train "A" control not in CR	
01:26:34	ADV Train "A" control not in CR	
01:26:36	ADV Train "A" control not in CR	
01:26:54	SG 2 line 1 ADV accumulator press low	

Control Room Logs

0106 Instrument air compressors A, B, C, tripped

0126 Tried to open ADVs from B06 (control room secondary plant panel). ADVs did not respond. Sent operator to verify ADV was in control room position at remote shutdown panel. ADVs could not be operated from remote shutdown panel. Operator placed each ADV in local and back to CR position to see if ADVs could not be operated from B06

0140 Took manual control of SGV-178 in manual at the valve and partially opened. Took manual control of SGV-185 at the valve, experienced difficulty in opening SGV-185. Took manual control of SGV-179 at the valve. Could not get SGV-179 to open, manual operator broken.

2. ADV System Functional Description

Each Steam Generator has a Main Steam Header that branches into two main steam headers per steam generator. Twelve inch Atmospheric Dump Valve (ADV) piping taps of each of the four main steam headers upstream of the main steam isolation valves. The two ADVs for steam generator "A" are SG-HV-179 (ADV-179) and SG-HV-184 (ADV-184). The two ADVs for steam generator "B" are SG-HV-178 (ADV-178) and SG-HV-185 (ADV-185). Each ADV can be remotely operated from the control room or remote shutdown panel by means of instrument air or individual safety-related nitrogen subsystems. They also can be manually operated locally at the valves.

Instrument air (IA) is normally supplied from the plant non-safety related instrument air system, through normally open isolation valves and a 25 micron filter, to the Atmospheric Dump Valves (ADV) actuators. One instrument air line supplies air to the actuators of two ADVs (one ADV for each steam generator) and a second instrument air line supplies air to the actuators of the other two ADVs. Similarly, IA is also supplied to the individual ADV positioners and permissives. Instrument air supplied to the ADVs is normally maintained between 100 - 125 psig. Each ADV has a safety-related backup nitrogen subsystem that supplies nitrogen to the ADV actuators in the event of loss of instrument air.

Each nitrogen subsystem consist of an accumulator, a solenoid operated isolation valve, a pressure regulator, two relief valves, two check valves, and attendant pressure gages. The accumulators are charged by means of the plant nitrogen system and are maintained at 625 to 650 psig. A pressure tap on the instrument air line to the ADVs senses IA pressure and is set to open the solenoid operated isolation valve when it senses IA pressure to be 90 psig or less. The 625 - 650 psig accumulator nitrogen is then allowed to go through a pressure regulator that reduces the nitrogen pressure to 95 psig, which then would be available to the ADV actuator, positioner and permissives for ADV operation on demand. Two check valves are installed between the nitrogen subsystem and IA. One check valve is oriented to preclude IA backfeeding the nitrogen subsystem and the other check valve is oriented to preclude nitrogen from feeding the IA system in the event that IA pressure decreases below the nitrogen subsystem pressure (normally set by the pressure regulator at 95 psig).

Independent of the safety-related nitrogen subsystem for each ADV, the IA systems is backed up by a non-safety related nitrogen system that supplies nitrogen when IA pressure is 85 psig or less.

3. AIT Inspection Findings

During the event, the plant alarm typer indicated that IA pressure dropped from 100-125 psig to 85 psig within two minutes of loss of power and concurrent loss of IA compressors. Reactor Operator statements after the event indicated that IA pressure decreased to approximately 64 psig while on the backup non-safety related nitrogen supply. The fast deterioration of IA indicates: (1) usage of IA in excess of that anticipated in the design; (2) excessive IA system leakage; or (3) inadequately sized IA accumulators. The relatively quick deterioration of IA pressure indicates that the safety related subsystem would have had to have been supplying the motive force for the opening of the ADVs when the secondary plant operator unsuccessfully attempted to open the ADVs from the Control Room and when an AO attempted to open one ADV (178) from the remote shutdown panel. Additionally, the following concerns were noted.

(a) Instrument Air/Nitrogen Subsystem Check Valves

For the safety related ADV nitrogen subsystem to be effective, the check valve between each ADV nitrogen subsystem and the IA system has to preclude leakage of nitrogen into the IA system. Nitrogen leakage past the check valve could result in insufficient nitrogen pressure being supplied to the ADV actuators and consequent inability to operate or inefficient/sluggish operation of the ADVs. The check valves are one inch IPS series 600 pound stainless steel Y-type Kerotest check valves with stellite No. 6 hardfaced body seats and discs. A review of various testing performed for Unit 3 indicates that the subject check valves have not been tested subsequent to installation, with IA isolated and vented. Furthermore, the check valves were not specifically included in the licensee's ASME Section XI IST program. In a September 10, 1987, response to a specific NRC question regarding the need to specifically include ADV nitrogen and IA valves, including the check valves, in the IST program, the licensee stated that the valves need not be individually identified in the IST program since they would be individually verified to operate during ADV full stroke exercising during cold shutdown using only the nitrogen accumulator supply. However, all such testing performed up to the event and the projected full stroke exercising of the ADVs had been performed with IA isolated but not vented. Unless IA pressure (normally 100-125 psig) is less than nitrogen pressure (normally 95 psig) leakage past the check valves would not be detected. The need for leak testing ADV check valves was identified by the SG system engineer and inclusion in the test program was requested on Instruction Change Request 00911 dated December 28, 1988. This request was assigned for resolution on March 7, 1989, subsequent to NRC

inquiries on the status of the request. Licensee representatives stated that the ADV nitrogen subsystem check valves would be included in the IST program and would be tested with IA isolated and slowly vented off.

NRC Information Notice 85-35, dated April 30, 1985, and 85-35 Supplement 1, dated May 17, 1988, identified various occurrences of safety related accumulators bleeding down due to check valve leakage. The original information notice identified a specific type of check valve (Parker Hannifin C Series Catalog 2502) installed in air lines for MSIVs and FWIVs. Licensee records for Information Notice 85-35 show that the specific type valves in the specific applications were reviewed for applicability and design change packages (DCP) 1FM SG 151, 2FM SG 151 and 3 FM SG 151 were issued on March 10, 1986, to replace the subject valves. The DCPs were completed for Units 1, 2, and 3. The licensee's Information Notice 85-35 and Supplement 1 record, however, does not document review of any other check valves installed in similar applications such as the ADV nitrogen subsystem check valves.

(b) Instrument Air Quality

NUREG-1275, Volume 2, "Operating Experience Feedback Report-Air Systems Problems" indicates that performance of air-operated safety-related components may not be in accordance with their intended safety function because of inadequacies in the design, installation, and maintenance of the Instrument Air System. NRC issued Generic Letter 88-14 on August 8, 1988, to request all licensees to review NUREG-1275, Volume 2, and perform a design and operations verification of the Instrument Air system.

This verification should include:

(1). Verification by test that actual instrument air quality is consistent with the manufacturer's recommendations for individual components served.

(2). Verification that maintenance practices, emergency procedures, and training are adequate to ensure that safety-related equipment will function as intended on loss of instrument air.

(3). Verification that the design of the entire instrument air system including air or other pneumatic accumulators is in accordance with its intended function, including verification by test that air-operated safety-related components will perform as expected in accordance with all design-basis events, including a loss of the normal instrument air system. This design verification should include an analysis of current air operated component failure positions to verify that they are correct for assuring required safety functions.

The February 20, 1989, ANPP response to Generic Letter 88-14, stated that air quality tests for Unit 2 were being performed and a final report would be submitted on April 28, 1989. The response stated that due to the standard design for all three units, the results of the Unit 2 air quality tests will determine the design modifications for all three units. The response further stated that a program for maintaining air quality, including air quality testing, will be performed in each unit on a periodic basis to be determined from the results of the initial air quality test performed on Unit 2. Air quality testing had not yet been performed in Unit 3 at the time of the event. Furthermore, the NRC inspector identified the following examples of IA quality concerns that had not yet been corrected in Unit 3.

(1) Engineering Evaluation Request 88-SG-110 identified that on July 6, 1988, ADV 179 did not respond properly during a Unit 1 reactor trip. A root cause evaluation of the problem determined that one of the needle valve air passages of the air actuator positioner was blocked with foreign matter (water, oil and dust). After cleaning the positioner air passages, stroke testing of the ADV demonstrated performance in accordance with design. Subsequently, work requests were issued to check and clean all ADV positioners in all three units. The licensee stated that the work had been completed on positioners in Units 1 and 2 but was scheduled for performance in the upcoming Unit 3 refueling outage.

(2) The Instrument Air lines to the Unit 3 ADVs also supply the MSIV air operators. Site Modification (S-Mod) 3-SM-1A-003, dated 10/31/87, states that during MSIV teardown, it was determined that "moisture from the Instrument Air lines had caused excessive damage (pitting) to the MSIV and FWIV four-way valves and air motors." The S-Mod corrective action required installation of a permanent moisture filter (3 microns) on IA line to the main steam support structure (for both MSIVs and ADVs). The S-Mod was scheduled to be performed during the upcoming refueling outage.

The inspector's observations were acknowledged by the licensee. Furthermore, the licensee acknowledged the need to review the performance of the IA system during the event and determine corrective action including a determination for the need for accelerating any Generic Letter 88-14 action.

(c) <u>Safety Related Nitrogen Supply to ADV Actuators</u>

(1) <u>ADV Nitrogen Accumulators</u>

The ADV nitrogen accumulators are charged by means of the plant non-safety related nitrogen system and maintained

between 600-650 psig. Technical Specification surveillance requirement 4.7.1.6.a requires verification every 24 hours that the accumulators are pressurized with at least 400 psig nitrogen. A review of the AO surveillance records for the ADV accumulators indicated that they were being maintained between 600-660 psig. However, the inspector also noted that on March 2, 1989, a note on the day shift operators turnover comments stated that "SG1 line 2 nitrogen accumulator bleeds down and must be made up once or twice a shift."

Subsequent to the event, the licensee performed testing on all ADVs in Units 1 and 2. Prior to testing of ADV-178 in Unit 2, the inspector noted that the normally open manual isolation valve between the accumulator and the solenoid operated isolation valve had a yellow tag indicating that the valve was hard to open unless pressure is equalized across the valve and referred to EER-87-SG-216. Prior to testing ADV-178, the manual isolation valve was shut and the accumulator was charged to approximately 660 psig. Although licensee personnel felt that the nitrogen subsystem line-up had been completed, no nitrogen pressure was being observed downstream of the open solenoid isolation valve. Subsequent licensee review of the valve lineup revealed that SG-V-354 was shut, pressure across the valve had to be equalized and the valve was opened. Nitrogen pressure downstream of this valve is locally indicated but is not indicated, alarmed or annunciated in the control room.

A review of EER-87-SG-1-216 indicates that the valve is designed with a floating disc and that as installed in the system, the vendor designed inlet port is installed as the as-built outlet port. The EER resolution was to issue operating department guideline 30 identifying the need to equalize the valve prior to opening it. However, the procedure change had not been issued. In addition, procedure 430P-SG01, Revision 5 - Main Steam, does not provide the above noted guidelines for operation/ verification of the valve for the normal system lineup.

(2) <u>Nitrogen Subsystem Pressure Regulators</u>

The ADV nitrogen subsystem pressure regulators are Target Rock Model 76Q-010 pressure regulating valves and are set to reduce the 600-650 psig accumulator pressure to 95 psig supply pressure to the ADVs. A review of licensee work order history revealed numerous work orders in all three units for readjusting the pressure regulators due to reported high outlet pressures for the regulators. No preventive maintenance records were available for the pressure regulators. The vendors name plate data shown on

the pressure regluator vendor drawing states that it's maximum pressure differential rating is 595 psig. During operation of ADVs nitrogen pressure up to 660 psig have been recorded. Consequently, differential pressure when reduced to 95 psig is 565 psid, only 30 psi less than the rated maximum. This appears to be a situation where the demonstrated poor reliability of the pressure regulators has been exacerbated by a marginal design; for example, normal operation of a device at near the manufacturer's specified maximum pressure differential. The team recommends that the licensee's Engineering Department thoroughly evaluate and resolve this situation. Further, the team considers that the poor regulator history should have caused such actions before the team pointed out the situation. This situation raises further questions regarding the depth of corporate engineering participation in diagnosing plant problems.

During testing of ADVs in Units 1 and 2, subsequent to the Unit 3 event, pressure regulators for ADV-184 in Unit 1 and ADV-184 in Unit 2 were reducing nitrogen pressure from approximately 650 psig to approximately 135 psig causing the nitrogen subsystem relief valve, PCV-137 (normally set to open at 125 psig) to open. Due to the 135 psig pressure downstream of the regulators and the lifting relief valves, those attempts to test ADV-184 in Units 1 and 2 with the nitrogen subsystem were not performed at that time.

(3) ADV Nitrogen Subsystem Filter

No filter is installed in the ADV nitrogen subsystem. Any moisture or particles that may be in the accumulators or the ADV nitrogen subsystem would have a high probability of being introduced into the ADV valve positioners whose ports are susceptible to blockage, as previously noted. Historical records indicate that a filter regulator was installed in the past but eliminated due to postulated effects on the total air flow to the valve actuators which was concluded to be one of the causes, along with pressure, of the valve operability problems encountered in the summer of 1985.

(d) ADV Positioners

A control room valve position demand signal generates control air/nitrogen pressure to a Moore valve positioner that in turn directs supply air/nitrogen, via solenoid operated valves and permissives, to the ADV pneumatic actuator to open or close the ADV to the demanded valve position.

A review of the ADV positioners work history revealed that accomplishment of open work orders (WO) for Unit 3 positioners was planned for the upcoming Unit 3 outage. The WOs (ex.

No. 00310397-for ADV-178) resulted from EER 88-56-110 that stated that ADV-179 in Unit 1 did not respond properly during the July 6, 1988 trip and that the valve response was erratic when it should have modulated closed. Subsequent disassembly of the Unit 1 ADV-179 positioner determined one of the positioner needle valve air passages was blocked with foreign matter (water, oil and dust). Work orders were subsequently issued to check all ADV (Units 1, 2 and 3) positioner "air passages to verify that they are cleared and the positioners are operable". Units 1 and 2 work orders were subsequently completed; Unit 3's work orders were scheduled for the upcoming outage.

Subsequent to the event, one of the tests of Unit 1 ADV-185 resulted in valve movement to the 2 to 3 percent valve open position with only permissives energized and no valve position demand signal being selected by the control room.

No specific preventive maintenance records were available for the positioners. However, an equipment qualification program requirement for replacement of positioner components on a six year cycle has been issued for Unit 1 and is planned for the other units.

(e) Atmospheric Dump Valves

The ADVs are twelve inch pipe size Control Components International (CCI) offset globe configuration "drag" valves Model No. B3G9-10-12P3-12P8-31NA51-shown on CCI drawing 9922501043, Revision AA. The valve internals, shown on CCI drawing 992601043, Revision N, includes an ASME SA 182-F11 stellite seated plug that seats on an ASME SA 182-F11 stellite seated ring seat. A disk stack assembly, consisting of a number of disks into which labyrinth flow passages have been etched to allow a fixed impedance and permits changes in flow rate while limiting flow velocity, is installed in the flowpath around the plug. The plug assembly includes a pilot valve and pilot valve exhaust flow paths. The vendor manual provides the following description regarding the operation of the valve.

- With the valve in the closed position, upstream pressure fills the chamber above the plug by way of a controlled leak across the piston ring. This provides a seating load equal to the inlet pressure times the full area of the plug.

- When a signal to open the valve is received, the actuator lifts the stem, opening the pilot seat which allows the chamber above the plug to become balanced with the downstream pressure. Upstream pressure acts upon the differential plug area, and provides an axial biasing force which causes the plug to remain on the main seat.

- As the stem continues to move in the opening direction, the pilot valve shoulder engages the plug to lift it off the main seat. The axial biasing force causes these opposing faces to remain in contact under all operating conditions.

- When the plug is in the modulating mode, biasing force provided by pressure acting on the differential area overcomes fluctuating pressures from the fluid jets exiting the disk stack.

- When a signal to close the valve is received, the actuator moves the stem in the closing direction. The biasing force on the plug causes it to follow the stem until the main seat is contacted. The operator then seats the pilot section. The controlled leak then fills the chamber above the plug providing additional seating force.

(f). Human Factors

(1) ADV Operation from the Control Room and Remote Shutdown Panel

After the reactor trip and main steamline isolation, the secondary operator attempted to control the heat removal safety function by using the atmospheric dump valves (ADVs). At the time of the Augmented Inspection Team (AIT) visit, details of what exactly went on in the control room (CR) regarding ADV operation were not entirely clear. According to the personal statements of the secondary operator, control of the ADVs was attempted by arming the permissive for all four ADVs and dialing in a fifteen to thirty percent "open" signal on all four controllers. After "a couple of moments had passed", the operator felt that it was apparent that the ADVs had not opened. Testing under optimum conditions (100% demand signal, no steam flow and IA activation) of these valves prior to the incident indicated that valve actuation response times ranged from 30 to 59 seconds with an acceptable maximum of 120 seconds. It is not clear whether the operator waited that long before he assumed that the ADVs had failed to open. It is not known whether operators are trained to expect a slow response from the ADVs. It is clear, however, that the Palo Verde simulator does not model ADV actuation response times accurately. In the simulator ADV position indicators begin to respond to an actuation signal in approximately ten seconds.

In the ADV testing that was done in Units 1 and 2 subsequent to the incident, it was found that control room demand signals of less than approximately 30% sometimes had no recognizable effect in the control room. Also, the simulator models valve opening in response to demand signals as low as 5% open where the actual plant ADVs will not open until about 30% demand is requested. Since this

apparently was not widely known prior to the event, the secondary operator could not possibly have known that the 15 - 30% demand signals that he dialed in may have been insufficient to open the valves. Therefore, when, in his judgement, the ADVs failed to open, the control room directed an AO to go to the Remote Shutdown Panel (RSP) and attempt operation from there.

Although most operators recognize that the simulator does not accurately reflect plant operation in some areas, it is not clear whether the inadequacies in the ADV modeling were widely recognized. These represent examples of negative training; a situation in which under virtually identical stimuli, the control room and the simulator supply different responses. Regardless of whether poor simulator modelling can be traced as a root cause of the ADVs failure to operate, the simulator at Palo Verde is recognized by many operators as a marginal training tool that has the potential for negative training effects in many areas of plant response.

It is currently not known who initiated the order to dispatch the AO to the RSP or what level of concurrence was obtained. However, use of an AO to perform control actions from the RSP was a questionable decision for two reasons. The AOs at Palo Verde do <u>not</u> receive training on operation of the remote shutdown panel. The Code of Federal Regulations restricts those who may operate the controls of a nuclear power plant to licensed operators. In the face of these considerations, a decision was, nevertheless, made to dispatch an AO to the RSP to attempt a series of actions.

First, the AO was instructed to verify that the ADVs were in the remote (control room) control mode, that is, that they were not in the local (remote shutdown panel) control mode. This was a consideration, according to the shift supervisor, because when there is a loss of power to the ADV control circuitry, control reverts from the control room to the RSP. After visually verifying that the ADVs were under the control of the control room and not the RSP, the AO was directed to place an ADV in local control and stroke it open. A valve was not specified by the control room. It should be noted that the control room positioner valve position indicator for atmospheric dump valve ADV-184 was failed at mid-scale. Although this lack of instruction specificity could have caused further confusion in the scenario, the AOs avoided manual operation of ADV-184 during the event. During the entire incident, communications from the control room were generally stated in non-specific terms, relying heavily on AO experience and training. As was stated above, AOs are <u>not</u> trained in the use of the RSP and, based on facts gathered during the AIT, it appears that training

regarding the manual operation of the ADVs is inadequate (AO training will be addressed below).

In response to his directive to stroke open an ADV from the remote shutdown panel, the AO switched to local control and entered a demand signal of 30-33% open for ADV-178. It should be noted that the AO was operating "from past experience" and stated that he was confused about the ADV controllers and indications on the RSP. The ADV permissive and valve position indicators are not very descriptively labelled and the AO was not sure what the indications meant. The AO apparently discounted his confusion about what the indicators meant and attempted to open the valve. The relationship between a valve and its associated controls and indications should be made as simple and clear as possible so that under the stressful conditions that are likely when the RSP is being used, operators are not unnecessarily delayed in the execution of emergency actions.

During a walk down of the RSP after the incident, the inspectors found a very loud local alarm sounding. Because the RSP had been quarantined, the inspectors questioned whether this alarm was on during the incident (to the detriment of the operators ability to communicate). The answer, supplied by licensee representatives, was that this alarm goes off when you switch any system from remote to local. This situation is likely to degrade communication during a legitimate emergency use of the RSP. Although an alarm may be necessary to protect plant control functions from being compromised, a local silencing function should be considered by Engineering as a human factors design improvement. The AO had initiated the open signal on the ADV-178, he waited "a couple of minutes" and then returned the controller to the closed position (with concurrence of the control room via radio).

The AO was then directed to switch all ADVs from remote to local and back to remote. This was done to assure that control was reset back to the control room mode because, at this time the control room had an alarm "ADV, not in control room position" and they wanted to be sure that it was caused by operation of ADV-178 and no other ADV (this is a multiple input alarm, as are many in the Palo Verde control room).

This situation demonstrates the disadvantage of using multiple input alarms--although they reduce the overall number of alarms, they introduce ambiguity. It is not known whether procedures were present in the RSP at the time of the incident. Regardless, the AO did not attempt to find or use any procedures while in the RSP.

The control room crew made further attempts to open the ADVs from the control room at this time without success. Five AOs were dispatched to the Main Steam Supply Structure (MSSS) to manually operate the ADVs.

(2) Manual Valve Operations in the MSSS Building

Upon entering the MSSS the AOs found the ADV rooms totally dark-normal, essential, and emergency lighting were all out. This situation undoubtedly complicated the operators tasks and increased their stress level. At this point in time, emergency lighting should have been on. This is discussed in other sections of this report. However, even if emergency lighting had worked, it would not have been much help because the beams were pointed at the ingress/egress paths (they were not installed with the intention of lighting work areas of the room). Additional emergency lighting should be considered for the purposes of task-lighting areas around equipment that are needed for emergency response. All emergency lighting should be maintained in an operable condition.

Interviews of the AOs also indicated that emergency lighting in the 140' level of the turbine building was not adequate to perform required tasks, even with the use of a flashlight. The licensee's Engineering Department needs to assess the adequacy of emergency lighting in all areas of the plant to perform the tasks required of operators in those areas, not only the lighting of ingress/egress routes.

It should be noted that none of the five AOs who entered the MSSS and were involved in the operation of the ADVs could remember having been trained on the operation of the ADVs. Several thought that they had either walked through the operation or had operated a similar valve in the past. These recollections ranged from "at least 2 years ago" to "during Unit 1 start-up" (approximately 4 years ago). There was no memory of any recent experience or training on the ADVs. This appears to be a common deficiency in the AO training program-lack of continuing or refresher training to keep qualifications current; especially regarding infrequently performed evolutions.

As presently organized, AO training is done under a "General" training program rather than under "Operations". Several AOs feel that this is an improvement because when they were under "Operations" they were competing with licensed-operator training for classroom time and other training resources. As a result they got little or no classroom training and no formal on-the-job instruction either.

Present training for AOs may be viewed as improving because of the increased attention being given them; however, in terms of format and frequency, training still appears to remain inadequate to fully enable AOs to acquire appropriate skills and retain them. Incoming AOs are given a large stack of reading materials covering the various information needed for AO qualification. They are tested on this material, and then as the opportunity arises, they are qualified on specific systems by: (1) actual equipment operations or observation, (2) walk down, or (3) discussion with a qualified operator about system operation. There is no requirement for requalification or continuing training. Because the operation of the ADVs is an infrequent activity, the need for training and requalification is essential--the less a system is used, the more training is needed to keep operator skills and knowledge at an acceptable level. The licensee should consider the following improvements to the AO training program: (1) the initial training on systems operation should include formal classroom training so that instructor emphasis can be provided, as well as reinforcement, of basic principles of operations and safety; (2) requalification should be required, at least for infrequently operated equipment or systems that are used during emergency operation; and (3) the training department should be augmented with operations personnel who are licensed and qualified to provide the AOs with the "knowledge/practical requirements" needed for AO qualification. This would reduce the competition for resources that AOs now face, e.g., having to find an RO or SRO to get a walkthrough or to sign off on qualification sheets.

As noted above, the AOs entered the darkened MSSS room with little or no experience in operating the ADVs. The first two AOs on the scene went to the nearest ADV (178), climbed up a vertical ladder to the platform where the valve operators for ADV 178 and 184 were and took the operating procedure for 178 out of its holder and read it by flashlight. In fact, they read it several times because they weren't familiar with the operation and the procedure was, in certain ways, not very helpful or clear.

A procedure is provided for each of the four ADVs. The only difference, and a critical difference, among them is the direction of rotation for the handwheel that manually operates the valve-two of the ADVs operate in the conventional way: they open by turning the handwheel

counterclockwise and close by turning it clockwise (178 and 179). The other two are reverse-acting, or opposite of the conventional turnwheel rotation (184 and 185).

The first three steps of the procedures for manual operation of ADVs includes general guidance for exposing the air operator shaft and connecting it to the manual override shaft by means of a clevis pin. A potential problem that the operators could have had with this task was in removing the "ZZ06 locks". These are the metal bands used to secure valves in a certain (open or closed) position. Fortunately, one of the operators was carrying cutters at the time--the licensee should consider whether these should be made available to AOs, at least for emergencies.

There are several other potential problems with these steps of the procedure. Step 2 does not specify the direction of rotation for the handwheels, nor does it explicitly state its intent--to expose the keyway on the actuator shaft (so that the clevis pin can be inserted). Step 3 appears to be a simple action, however, the actual task may not contain sufficient feedback to allow an operator to determine its success. That is, step 3 calls for the operator to "slide clevis onto actuator shaft". The clevis pin is a U-shaped key that fits into an indented area of the actuator shaft. Since the indentation (keyway) is not very deep and the pressure on the clevis pin is great (ADVs fail closed), it is important to have the clevis fully inserted in the keyway. The procedure contains no direction that the clevis pin should be fully engaged. During the event the keyway on the actuator shaft for ADV 185 and the clevis pin failed, potentially due to the clevis pin not being fully engaged.

At this point the procedure becomes even more general in its guidance, relying on operator experience or training to fill in the details. Step 4 contains two actions "OPEN equalizing valve between piston sides and isolate instrument air". This step caused additional confusion for the AOs. During this phase of the event, they did not know what or where the equalizing valve was. It was actually on the side of the actuator below the level of the platform on which they stood. Once they figured out what the valve was, they did locate it but could not confirm that it was the correct valve because it was not labelled. The licensee should label this valve and provide the valve name, number, and location aids in the procedure. Once the valve was located, the operators had to go halfway down the ladder of the ADV platform and lean across or stand on piping to turn it. If accessibility could be improved, the operators could perform this task more efficiently and safely.

The second task in Step 4, "isolate instrument air" involves remembering, or in this specific case, tracing down the instrument air isolation valve and closing it. Although the operators expected to find the isolation valve at the ADV platform where they were working, they finally found it on the other side of the room behind a ventilation duct. Neither the valve number nor any location aids are provided in the procedure. However, one of the operators traced the line and did close the appropriate valve. Since he had no valve name or number in the procedure to confirm his actions, he later traced the line down once more and tried to close another valve (a bypass valve that was already closed). This step could have been much easier if the valves were clearly labelled as to their function and if the procedure called out the appropriate valve by name and number and provided some location aid.

Step 5 simply provides directions on which way to turn the handwheel to open or close the valve. The reason the step is necessary is because at Palo Verde not all valve handwheels operate in the conventional manner, that is, counterclockwise to open and clockwise to close. Of the 12 types of air-operated valves used at Palo Verde, 5 have non-conventional handwheel rotation. There are additional variations depending on whether the valve fails open or fails closed. It is not known whether AOs generally recognize this variation among and within valve types. One AO stated that "...you basically go by the rule of righty tighty/lefty loosey on any valve". While another recalled that he was specifically cautioned about non-conventional handwheel rotation on the ADVs. It just so happened that, although the type of valve used for the ADVs has a non-conventional turnwheel rotation, the specific application, at ADV 178 was changed to the conventional direction of rotation. This change was actually an artifact that resulted from having to flip-flop the handwheel from one side of the valve actuator to the other so that the handwheels for both ADVs would face the platform. This change resulted in a configuration in which an operator standing on the ADV platform has a handwheel on his left and a handwheel on his right, i.e. facing each other. Although this makes the handwheels more accessible, it also results in having identical valves that open and close in a reverse manner from each other. Fortunately for the operator on ADV 178, these circumstances happened to result in ADV 178 having a conventional handwheel rotation. The operator in the south MSSS room who was working on ADV 179 was not as lucky (details are provided below).

At the time the AOs were putting ADV 178 into manual operation, several other AOs were involved in attempting to operate the ADVs for the other steam generator. When

the first of these operators got to the MSSS building, he passed through the north room where the two AOs were on the ADV platform attempting to operate 178. He went into the south room and climbed the ADV platform where valves 179 and 185 stood. He pulled the procedure for ADV 185 and started to line up 185 for manual operation per the procedure. When he got to step 4, he, like his fellow operators in the north room, was not familiar with the valves that where implicated (not specified) in the procedure. It turned out that the isolation valve for the instrument air for ADV 185 is the same valve used to isolate ADV 178 (they are in the same train). Therefore, although the operator may have expected the isolation valve for 185 to be at the platform area near 185, it was actually not even in the same room--it was in the north room behind the ventilation duct. Failing to find the valve, he went into the north room to ask the operators there if they had found their isolation valve. At that time one of the operators advised him that he had found the valve and that it, in fact, isolated both valves in that train, 178 and 185. Therefore, they concluded that 185 was already isolated. None of this information was in the procedure.

After determining that 185 was isolated from instrument air, the operator was directed to open the valve about 2%. With great difficulty the operator correctly turned the handwheel in a clockwise direction to attempt to open the valve. The direction of rotation was correctly specified in the procedure and he had read the procedure. At this time, a safety relief valve lifted causing considerable noise. This also raised the sense of urgency of the operators, especially the one in the south room because he couldn't tell which steam generator was relieving. He assumed it was his because, by this time, the operators in the north room had gotten ADV 178 open. He jumped down the ladder from the ADV platform to look at the valve position indicator (valve position indication is on the shaft of the valve itself and cannot be seen from the ADV platform). This necessitates either running up and down the ladder or having a second man (if available) watch the position indicator.

The operator determined that the valve had opened slightly. He went back up to continue opening the valve. At this point the handwheel began to slip. The operator recognized that there was a set screw in the handwheel that was loose. Since he had no tools, he decided to abandon 185 and try to set up 179 for manual operation instead. He advised the control room of his intentions and they agreed.

At this point he was facing ADV-185. He turned around and lined up ADV 179 for operation. Since the steps of the

procedure were fairly simple and he had just completed the operation for ADV-185, he did not pull the procedure for ADV-179. It appears that he assumed that identical valves would operate in an identical manner. In this case that assumption is false.

In order to have the handwheel on the platform side of the actuator, the handwheel was flip-flopped, resulting in a conventional direction of rotation for opening ADV-179. As a result, when the operator turned to ADV-179 he was facing a valve that did not operate in the same way as the identical valve, ADV-185, three feet away.

After lining up ADV-179, a second AO arrived on the scene. He had overheard the conversations about the handwheel on ADV-185 slipping and brought along some tools. They made an unsuccessful attempt to tighten the set screw on the ADV-185 handwheel. Rather than wasting more time by attempting to fix ADV-185, they decided to try to open ADV-179. The safety relief lifted again, increasing their sense of urgency. The second AO, at the direction of the first, attempted to open the valve by turning the handwheel clockwise (incorrect for this valve). The procedure for manual operation of ADV-179, posted at the valve, stated that the handwheel had to be turned in a counterclockwise direction to open the valve. Since ADV-185 had been difficult to turn, they decided that the valve was probably stuck on its seat. Using a 24 inch pipewrench as a "cheater bar", they turned the handwheel one full turn in the wrong direction. At that point they heard a loud bang, and ADV-179 and the platform vibrated. They took out their flashlights and saw that the top of ADV-179's valve operator had been damaged. They advised the control room and turned their attention back to ADV-185. By that time a third operator came to help. This third operator was watching the valve position for ADV-185 as the second turned the handwheel (in the correct, but non-conventional direction). Suddenly, ADV-185 slammed shut. The keyway on the actuator shaft had chipped and the clevis pin flew off allowing the valve to fail shut. The operators took the clevis pin from the broken actuator of ADV-179 and used it on ADV-185. It took two operators, using all their effort, to open ADV-185 about 7%. The control room advised them to stop there.

In parallel with some of these later actions, the control room had dispatched AOs to open main steam isolation bypass valves. These operators were faced with many of the same problems that the ADV operators had, e.g., the procedures were not specific, did not refer to valves by functional name and number, valves were hard to locate, and one was inaccessible (it was on a different elevation, necessitating that the operator leave the 140 elevation,

go out a secured door, go down to the next level and enter through another secured door and then find and operate the valve).

Review of the procedures also noted that the nitrogen supply to the ADVs should also have been isolated as part of the preparation for manual operation. This is not addressed at all in the procedure for manual operation of the ADVs. The procedure for manual operation of the ADVs, posted at the ADV station was not adequate for the tasks; further, the procedure was not followed when operating ADV-179, resulting in damage to the operator.

(g) ADV Testing

(1) Prior to the event, Unit 3 ADVs had been tested during cold functional testing, hot functional testing and during ADV capacity testing. The hot functional test was performed with full system pressure and using nitrogen as the motive force for ADV actuation. Instrument air was isolated. However, the header between instrument air and the nitrogen subsystem was not vented. No tests had been performed prior to the event with IA isolated and vented. Since the check valves between IA and the nitrogen subsystem had not been leak tested subsequent to installation, the validity of testing with the nitrogen subsystem was questionable in light of possible leakage past the IA/nitrogen check valves.

ASME Section XI testing for the ADVs had been performed in Modes 4 and 5 individually using nitrogen for one test and IA for another test. When IA was isolated, it was similarly not vented.

(2) Subsequent to the event, testing was performed on all ADVs in Units 1 and 2. Performance of the testing and the results have demonstrated multiple failures and possible failure mechanisms. Table 1 summarizes the testing and the results as of March 21, 1989. As can be noted, possible failure mechanisms include the failure of the nitrogen regulators, the failure of the ADV positioners and potential problems with ADV internals such as pilot valve and port sizing and cylinder seal leakage.

(h) ADV Problem History

As part of the licensee's trouble shooting plan for the ADV problems encountered during the event, a preliminary ADV problem history was developed. The preliminary problem history indicates the following:

(1) During hot functional testing of Unit 1 in July, 1984, oscillations from full open to full closed were observed

on ADV-178 and 184. The valves were disassembled and damage was observed. Subsequently, the valves were repaired and steam traps were installed downstream of the ADVs to ensure steam outlet lines are clear to prevent ADV oscillations.

(2) During surveillance testing in May 1985, Unit 1 ADVs 179 and 184 failed. Subsequent testing determined that ADV 179 was oscillating and ADV 184 did not open. The licensee recalibrated the positioner and successfully retested the valves.

(3) During Unit 2 hot functional testing in July and August of 1985 severe oscillations were observed during testing of ADV-179. During testing of ADV-178 to the first 10% stroke test, the valve opened to 25 to 30 percent. Valve positioner recalibration had to be performed. During further testing of all four valves using the nitrogen backup system, problems were encountered with the nitrogen pressure regulators and all four pressure regulators were subsequently reworked.

(4) During the time period between May 1985 and January 1986, the licensee and the AE contracted various testing services and consultants such as Crane, Control Components Incorporated (ADV vendor), and Les Driskell (private consultant). Numerous studies and recommendations were obtained. Various changes to the valve were discussed and evaluated. These changes included:

- Installing a motor to operate the ADVs in lieu of air actuators -- although tested and reviewed, this change was not implemented.

- Install a block valve upstream of ADVs to allow periodic cycling of valve at power. This change was not implemented.

- Increased air pressure to the actuators from 100 psig to 150 psig. This has not been implemented -- nitrogen pressure is still regulated down to 95 psig.

- Eliminate existing filter-regulator. The IA filter-regulator was replaced with a filter only thus allowing instrument air pressure of 100 psig to 120 psig to be supplied to the actuators. However, the nitrogen pressure is still regulated down to 95 psig.

- While not specifically recommending any changes, a CCI letter dated June 10, 1985, discusses possible changes to improve valve operation such as decreasing body to piston seal leakage; increasing pilot valve flow coefficient (Cv); increasing disk stack transition Cv; stiffer pilot valve spring; and change

of lower packing with metallic spacer to decrease packing friction. It did not appear that the licensee had implemented any of these changes.

(5) The ADVs are similar in design to the Steam Bypass Valves except for the certain slight differences in valve internals. On August 12, 1985, CE responded to an AE request for CE to take lead responsibility for long term resolution of physical and operational problems found with the Steam Bypass Valves. The CE letter provided the following immediate and long term recommendations:

Immediate

- Maintain a clean system - valve reliability directly proportional to system cleanliness.
- Do not modify working valves successfully tested.
- Isolate and cycle each valve monthly to assure operability - past history indicates valve is more reliable if exercised.
- When flushing system in Palo Verde 3 observe (vendor manual) installation instructions regarding flushing - the system should be flushed with the disk stack removed from the body assembly and a flushing flange installed.

Long Term Recommendations

- Clean system of trash and contaminants.
- Install wave spring under piston ring to any valve that is disassembled or requires disassembly - past valve experience indicates excessive piston ring leakage is the primary problem. Piston ring cocking due to trash contamination would be held to a minimum by installing the wave spring.
- Subsequent to testing at SONGS 3, perform CCI pilot area modification - increase discharge area nearly double.
- Existing plugs removed from Palo Verde 2 should be returned to CCI for stellite facing - this would increase life of plug and increase reliability of piston ring seal. Maintain plugs as spares for future replacement.
- Modify valve internals instead of increasing actuator size.
- CE did not recommend increasing air supply pressure.

On August 30, 1985, in a letter to ANPP, the AE concurred with the CE recommendations and recommended the following major implementation/changes for the Steam Bypass Valves.

- Add a wave spring under the piston ring of each valve.

- Increase air supply pressure to the actuators by replacing air filter regulators with high capacity air filters.

There did not appear to be any documentation that all the recommendations for the steam bypass valves were generically evaluated for the similar design ADV's. From discussion with licensee representatives, the justification for not addressing the ADVs seemed to revolve around the difficulties encountered with testing and maintenance during reactor operation at power, since the valves are nonisolable.

Additionally, licensee representatives asserted that in the unlikely event of a failure of the ADVs, reactor decay heat could be removed through the main steam line safety valves which would be opened when pressure in the steam generator reaches the pressure relief set point. Steam release would continue until the pressure is reduced to the safety valve reset pressure. The safety valves would continue to cycle in this manner as steam generator pressure rises and is relieved. The reactor coolant system would remain at hot standby conditions during this pressure relief cycling. Cooldown of the reactor could be accomplished through manual operation of the atmospheric dump valves. Each ADV has a handwheel that can be operated locally, and the licensee considered that manual operation of all four ADVs was possible at that time.

(6) In September 1985, during further hot functional testing, Unit 2 ADV controls, functions and operability were verified to be in accordance with design at normal plant operating pressures and temperatures. In January 1987, during Unit 3 hot functional testing, ADV operability was verified to be in accordance with design.

(7) No significant activity relevant to ADV design, testing or design changes were readily apparent subsequent to Units 2 and 3 hot functional testing.

(8) During a Unit 1 trip in October or November 1988, sluggish operation of the Steam Bypass Control Valves were experienced. The system engineer discussed the problem with his counterpart at San Onofre Nuclear Generating Station (SONGS) who had similar Steam Bypass Control Valves (SBCV). SONGS informed the APS system engineer of the modifications SONGS performed on its SBCV--redesigned

body to cylinder seal rings, redesigned pilot valve Cv and redesigned cylinder pilot exhaust port. The system engineer subsequently contacted CCI to obtain more information. On January 4, 1989, CCI sent the system engineer a proposal for modifications to the ADVs similar to the SONGS modifications. These modifications had not yet been performed at the time of the event.

C. Steam Bypass Control System (SBCS) and Turbine Bypass Valves

1. Description of Operation

The Steam Bypass Control System (SBCS) and Steam Bypass Valves permit load rejection or turbine trips from any power level without causing a reactor trip or opening of either the pressurizer or main steam safety valves. After a trip, the SBCS valves prevent the lifting of the safety valves and help smooth the transition to hot shutdown conditions. The SBCS operates eight steam bypass valves, six of which are connected to the main condenser and two which dump directly to the atmosphere. The eight steam bypass valves are operated in two groups (X and Y) of four valves per group. The eight valves remove steam from the main steam system downstream of the MSIVs and are, therefore, isolated from the S/G's on an MSIS. The SBCS also includes the electronics required to properly position the eight valves.

The pneumatically operated steam bypass valves controlled by the SBCS are actuated by a control assembly consisting of an electric pneumatic (E/P) converter and valve positioner, a double acting valve operator and two solenoid-operated pilot valves. The control air operates against a spring force in the valve operator so that when control air pressure is lost, the valve returns to the closed position.

There are two operating modes for the SBCS. The principle operating mode of the SBCS is the modulating mode. In this mode, a main steam header pressure setpoint program is generated as a function of NSSS power, with steam flow used as a power index. The steam bypass valves are modulated by a proportional plus integral plus derivative (PID) controller operating on a comparison of the main steam header pressure with the programmed setpoint header pressure. The second operating mode for the SBCS is the quick opening mode. The quick opening mode, which overrides the modulation action, is produced when the magnitude of the load rejection (as determined from the large decrease in steam flow) exceeds a certain value.

2. Valve Modulation

Valve modulation is used to control relatively slow NSSS transients. To prevent an inadvertent opening of any steam bypass valve, two signals must be present at the valve to allow

valve modulation; valve main control signal and valve permissive signal.

For this, two parallel circuits (main and permissive) are used. Two independent main steam header pressure setpoints are generated; one for the main modulation control channel, which produces the valve control signals, and the other for the permissive modulation control channel, which produces the valve permissive signals.

The setpoint signal with the higher value is used by the main modulation control channel, while the lesser signal value is used by the permissive channel.

Because the permissive controller accepts the lesser of the two generated setpoints and the greater of the two measurement signals, the permissive controller output should always be greater-than-or-equal-to the main controller output. This ensures that whenever valve modulation is called for, the valve permissive signal is already present to permit the steam bypass valves to open in the modulating mode.

3. Valve Quick Opening

A steam bypass valve "Quick Opening" (Q.O.) signal is generated by the SBCS to handle large NSSS transients. Two independent and identical rate detection circuits are utilized to prevent a single failure from opening a valve. Each rate detection circuit generates a group X Q.O. (for bypass valves 1, 3, 4 and 6), and group Y Q.O. (for bypass valves 2, 5, 7 and 8).

A quick opening demand from both rate detection circuits must be present to energize the quick opening solenoids at the bypass valve. In addition, the system must be free from valve interlocks. Prior to the valve cycling open, the permissive solenoids must also be energized. In the quick opening mode the source of the permissive is the coincidence of a quick opening demand from both rate detection circuits. However, in this mode the permissive solenoids can also be energized by the normal modulation permissive demand.

Once steam flow has been established through the quick open sequence a valve modulation signal is generated based on steam header pressure as the demand for quick open decays. This modulation signal works to position the SBCS valves and maintain secondary steam load to match Reactor Power, as the bypass mode shifts from quick open mode to the modulating mode.

To be assured of having a permissive signal while the SBCS is shifting from quick opening mode to modulating mode, a timer circuit in each of the rate detection permissive circuits to the X and Y valve groups operates for approximately twenty seconds to overlap the quick opening permissive with the modulating permissive signal described above. This allows the

modulating permissive signal to come in and assures a smooth transfer of the control of the steam bypass valves from the quick open mode to the modulating mode following a quick opening sequence. Without a permissive signal present, to maintain operating air pressure on the valves, the open valves under spring pressure will slam closed.

During the licensee's investigation of the SBCS to determine the cause of its improper response to a large load rejection, it was found that the permissive timer circuit for Group X valves had failed. This timer circuit like Group Y permissive timer had been set to "Hold In" for 15 seconds, but had opened at seven seconds. This error was found while troubleshooting the SBCS with a simulated load rejection. Four successive simulated load rejection tests produced the same results, failure at seven seconds. The failure of Group X timer card was the cause of the multiple quick openings of the steam bypass valves.

The absence of the modulating permissive signal resulted in Group X valves (PV-1001, 1003, 1004 and 1006) going closed. However, because the quick opening signal was still present; the Group X valves again opened. This process repeated itself for ten quick openings of the valves in approximately two minutes, at which time the reactor tripped and blocked any further opening of the steam bypass valves.

The timer is an Allen Bradley logic card part number 1720-L440. Ongoing investigation of the timer card is proceeding to determine the root cause of the failed timer card.

The inspector in reviewing Special Plant Event Evaluation (SPEER) 88-03-003, "Main Transformer Phase B Bushing Failure, July 31, 1988," identified that the permissive timer for Group X steam bypass valves 1001, 1003, 1004 and 1006 had malfunctioned resulting in a loss of the open permissive signal during the July 31 event. However, there was no follow-up at that time to determine the cause of the malfunction of the Group X permissive timer. The licensee missed this opportunity to preclude a more serious event. Had a follow-up of this malfunction of the timer card been performed in August 1988, the steam bypass system would probably have operated properly during the March 3 event precluding a reactor trip.

4. <u>Preoperation and Operation Tests, and Preventive Maintenance (PM) Tasks.</u>

The inspector examined the following records and documents for Unit 3 SBCS and for Units 1, 2 and 3 steam bypass control systems:

- Preoperation test procedure 92PE-3SF04, "Steam Bypass Control System Test" and test results.

- Procedure 36MT-9SF03, "Steam Bypass Control System Functional Test" performed every fuel cycle (18 months)

- Procedure 36MT-9SF04, "Steam Bypass Control System Calibration" performed every fuel cycle (18 months)

The preoperational testing of the SBCS was conducted between July 7 and November 6, 1986 and was approved and signed January 28, 1987. The test results appeared to be in order and did not identify any anomalies. The test concluded that "the test data verified that the SBCS will function per design and meet pertinent licensing commitments." The SBCS functional test and calibration procedures 36MT-9SF03 and 36MT-9SF04 have not yet been performed on Unit 3. The first eighteen month performance tests are scheduled to be completed during the present Unit 3 refueling outage.

The licensee following the discovery of the failed timer card has initiated, Instruction Change Request (ICR) 5233 dated March 10, 1989 to revise Section 8.5 of Procedure 36Mt-9SF03 to functional test and check the period of the timer card.

The inspector also reviewed operations procedure 430P-3SF05, "Operations of the Steam Bypass Control System", which is performed monthly. This procedure provides guidance for placing the steam bypass control system in operation and for the periodic monthly cycling of the steam bypass control valves. The inspector examined the performance records for the past 12 month period and verified that this operations procedure had indeed been performed monthly as required.

The following Preventive Maintenance (PM) tasks were also examined:

- PM Task 034987 (Series), "Instrument Loop for Main Steam Bypass Control Valve." Calibrate Valve Loops for Valves PV1001 through PV1008.

- PM Task 064289, "SBCS Valve Dynamic Response Time Test." Dynamic Time Response Test for SBCS Valves PV1001 through PV1008.

These two PMs are performed biannually. Performance records indicate Task 034987 has been accomplished twice on Unit 3, July, 1987, and August, 1988. Task 064289 which is a new PM was last accomplished in January, 1988.

The team concluded that the frequency of certain PM tasks (biannually) and loop calibration/functional test (18 months) may not be sufficient to provide the needed level of assurance that this important system will operate as designed when called upon. The licensee is urged to reexamine these programs and assess needed improvements.

Other Records

The inspector also examined the following records for the SBCS's for all three units:

PCRs, Plant Change Requests (back to 1984).
PCPs, Plant Change Packages (back to 1985).
EERs, Engineering Requests (back to 1983).
DCPs, Design Change Packages (back to 1985).
WOs, Work Orders (back to 1985 Unit 1, 1986 Unit 2, and 1987 Unit3).

The review of these records revealed that in the past a problem with malfunctioning of steam bypass valves was caused by the valves hanging up and not operating. The licensee instituted more frequent (Monthly) cycling of the valves to resolve this problem. Also, a modification which entails changing out the internals of the valve to ensure more reliable operation is presently in process. The new internals are onsite and will be installed in PV-1001 valve on Unit 1 as the prototype.

The licensee apparently did not recognize that the SBCS valves were similar to the ADVs because provisions for SBCS valve periodic cycling were not applied to the ADVs; nor was the above reliability enhancing design change. The team feels that had the licensee been more complete in the performance of this technical work, the association to the ADVs would have been evident. The team considers that the responsibility for this oversight belongs with engineering.

D. Emergency and Essential Lighting

The essential lighting in the Main Steam Support Structure (MSSS) building was lost at approximately 0104 when all non-safety loads were shed from the vital busses in response to the SIAS. At approximately 0130, the time when the auxiliary room operators were attempting to manually operate the four ADVs at the 140 foot elevation in the MSSS building, there was no essential or normal lighting (the circuits were dead) in the north or south rooms where the four ADVs are located (two in each room). The auxiliary room operators reset six distribution panels supplied by Class 1E power at approximately 0140 and the essential lighting was restored. The staff considers that this amount of time to restore/reset Class 1E supplied distribution panels is excessive and recommends that the licensee evaluate their procedures and practices for restoration of such panels.

The emergency lighting, which is battery operated and floats on the essential lighting circuits, are illuminated when AC voltage is lost on these circuits. Essential lighting circuits 3E-ZCL-72A-14-140-09 and 10 serve the south and north rooms, respectively, at 140 foot elevation. However, from the auxiliary room operators statements these emergency lights did not operate to illuminate the areas when essential lighting circuits ZCL-72A-14-140-09 and 10 were lost. The

rooms were in total darkness when they entered the rooms to operate ADVs manually. However, panels D-90 and 91 were re-energized at about 0140 and the north room was illuminated by the one essential light in that room. However, the bulb was burned out in the one essential lighting fixture in the south room; consequently, the south room remained dark until normal lighting was restored at about 0240 hours. The licensee has a program in place to replace, throughout Unit 3 during the present refueling outage and during the next refueling outage for Units 1 and 2, the 750 hour life light bulbs, in the essential lighting fixtures, with 10,000 hour life expectancy bulbs. The staff considers that the licensee needs to reexamine their practices and procedures for performance of light bulb replacement preventive maintenance tasks.

The inspector examined several emergency lighting records such as preoperational test records and preventive maintenance (PM) tasks performed periodically; Monthly, Quarterly, Annually and at eighteen month intervals. The regular performance of the required PMs ensures the proper operation of the emergency lighting. This review of records was done for all three units. Some of the findings are described below.

a) Pre-operation test procedure 93GT-0ZZ47, "Pre-operational Specific test Unit 1" test results for emergency lights operated from circuits ZCL-72A-14-140-09 and 10 at the 140 foot elevation in the Main Steam Support Structure (MSSS) could not be retrieved from the records archives.

b) Pre-operation test procedure 93GT-0ZZ47, "Pre-operational-Generic Test Package Unit 1, 2 or 3" test results for Unit 3 (in October, 1984) demonstrated a two hour illumination time for emergency lights operated from circuits ZCL-72A-14-140-09 and 10 at the 140 foot elevation in the MSSS structure.

   PM task 055795 for Unit 3 every (18 months) calls for a 1 1/2 hour discharge test of the battery pack emergency lighting units at the 140 foot elevation of the MSSS structure. It was last accomplished June 10, 1987, and is next scheduled September 7, 1990.

c) PM task 058655 for Unit 3 (quarterly), calls for a walkdown of emergency lighting to determine operability of battery pack emergency lighting units at 100 foot, 132 foot, and 140 foot elevations. It was last accomplished September 23, 1987, waived five consecutive quarters and is next scheduled June 15, 1989.

d) The action plan for emergency lighting for the Unit 3's March 3, 1989 event called for performing (every 18 months) PM task 055795, "cycle emergency lighting, perform periodic maintenance per the applicable portions of the attached instructions." This task was accomplished on March 7, 1989. The electrolyte level in the batteries of the two emergency lights under review was found to be down near the bottom of the

plates. A discharge test of 1½ hours was performed on each of the two emergency lights 3E-ZCL-72A-14-140-09 and 10. The PM procedure calls for a 1 1/2 hour test, in error, instead of the necessary 8 hour test.

e) Procedure 30AC-9MP0Z, Revision 0, dated 7/6/88, "Preventive Maintenance," Section 3.5 describes the process for waiving PM task work orders. Four of the five waivers for PM Task 058655 identified above in subsection c) were concurred with and signed after the due date for the PM task had passed, due date/waiver signed; 12-15-87/3-2-88, 3-15-88/6-13-88, 9-15-88/12-9-88, and 12-15-88/3-8-89.

ANPP letter dated April 15, 1985 confirms the FSAR Section 9.5.3 commitment that eight hour emergency lights will be installed at the 140 ft. elevation MSSS structure (Units 1, 2 and 3) by stating, "that the 8-hour emergency lights are installed in all areas needed for operation of safe shutdown equipment and in access and egress routes thereto."

Items a), b) and d), above, demonstrate that the identified emergency lights for units 1 and 3 were not adequately tested to verify that they satisfied the requirements of Final Safety Analysis Report (FSAR) Section 9.5.3 to operate for eight hours under emergency conditions.

Item c) and e), above, demonstrate an inadequately implemented and controlled preventive maintenance program.

Discussions with AOs indicated that the level of lighting provided by emergency (battery pack) lighting is so poor in many areas of the plant that, in the event of blackout, the lighting level is not adequate to perform the required tasks in those areas, even with a flashlight; particularly in the turbine building. It is clear that the licensee needs to perform a comprehensive analysis of tasks required to be performed in plant areas in the event of blackout and assure that lighting levels are adequate to perform those tasks; not only to light ingress/egress routes. Further, this event clearly indicates that the licensee needs to thoroughly assess the adequacy and status of PM programs, in general, to improve the level of confidence that equipment will operate as designed when called upon.

E. Valve/Damper Position Indication - ESFAS Actuation

1. Valve Indication Problem

Reactor Operators have two means on the control panels of verifying the proper operating position of engineered safety features components in the event of an Engineered Safety Features Actuation System (ESFAS) actuation.

Safety grade status lights are provided at the handswitch operator for each Engineered Safety Features (ESF) component.

Additionally, a Safety Equipment Actuated Status (SEAS) panel is provided to monitor all the ESF components and alert the operator by visual and audible means when any item of equipment fails to move to the required safe operating position. The SEAS panel is part of the Safety Equipment Status System (SESS) which is not considered an essential safety system. Isolation devices are not provided between the safety related input circuits and the SESS, so the system is therefore classified as Safety Associated.

Following actuation of ESFAS on March 3, 1989, operators verified the status of ESF components in accordance with Emergency Operations Procedure 43EP-3ZZ01 by performing Appendices J, K, and M to verify Safety Injection Actuation System (SIAS), Containment Isolation Actuation System (CIAS), and Main Steam Isolation System (MSIS) components, respectively. Verification is performed by checking the position of the safety grade status lights associated with the individual component hand switches.

Two valves, SGB-UV-228 (SG-1 Cold Leg Blowdown Isolation) and SGB-HV-201 (SG-2 Chemical Injection Isolation), indicated intermediate position as evidenced by dual indication on the hand switch position lights. The indication problem on SGB-HV-201 had been identified prior to the event and the SEAS panel did not show this component out of position following the ESF actuation. Valve SGB-UV-228 indicated intermediate position as evidenced by dual indication on the hand switch position lights. The SEAS panel did not indicate that this valve was out of position following the ESF actuation. The valve upstream of SGB-UV-228, the SG1 cold leg blowdown upstream isolation (SGA-UV-211), indicated closed on both the hand switch indicators and the SEAS panel. The reactor operator attempted to clear the dual indication on SGB-UV-228 by going to override and trying to manually close the valve via the hand switch, but was unsuccessful in obtaining full closed indication. The conflict in position indications for SGB-UV-228 may be due to differences in the circuit limit switch settings for the SEAS indication and the handswitch indication. It could also indicate a failure of the SEAS indication to annunciate a dual position actuated device, since SEAS indication is taken from a single reed switch. The licensee troubleshooting efforts on SGB-UV-228 are continuing.

SGB-UV-228 and SGB-HV-201 are tested per Technical Specification 4.3.1.1 Table 4.3-2 to verify "B" Train ESFAS automatic actuation subgroup relays and associated equipment actuation circuits operate properly. Testing is accomplished per test procedure 36ST-9SA02, ESFAS "B" Train Subgroup Relay Monthly Functional Test, which is performed at least every 62 days on a staggered test basis with 36ST-92101, ESFAS "A" Train Subgroup Relay Monthly Functional Test. Valves SGB-UV-228 and SGB-HV-201 were last tested on January 24, 1989. Both valves cycled properly during the test, but the hand switch indicator

dual indication problem was noted for SGB-HV-201. The position indication deficiency was first identified on November 24, 1988. A special test was performed on January 11, 1989, that verified SGB-HV-201 cycled closed. The position indication problem was scheduled for troubleshooting during the Unit 3 refueling outage.

2. SEAS Panel Indication Problems

Following the ESFAS actuations on March 3, 1989, the SEAS panel had indications that several components had failed to move to the required safe operating position. In each case the safety grade hand switch position indication for each valve showed the valves to be in the required closed position.

Annunciators for the following components were lighted on the SEAS panel:

a) Common window for SGA-UV-227 (SG-2 Blowdown Downstream Isolation Valve), SGA-UV-225 (SG-2 Hot Leg Blowdown Downstream Isolation Valve), and SGA-UV-223 (SG-2 Cold Leg Blowdown Downstream Valve)

b) HPA-UV-1 "A" Recombiner Supply Isolation Valve

c) SGA-UV-1134 Steam Trap SGN-M24 Isolation Valve

d) SGB-UV-1135 Steam Trap SGN-M01/M02 Isolation Valve

e) HAA-M06 Auxiliary Building Lower Level Isolation Damper

Verification of equipment position after the actuation was performed by the operator per Emergency Operations procedure 43EP-3ZZ01. Damper HAA-M06 had an indicated dual position on the hand switch position indicator. The hand switch and SEAS panel input are supplied from the same position limit switch. The damper was verified by an auxiliary operator to be in the correct position. The Safety Equipment Status System (SESS) Commissioning Test 92CM-3ES01 was completed on January 16, 1986. The SESS system is tested every 18 months during performance of Integrated Safeguards Testing per 73ST-3DG01 and 73ST-3DG02 which were last performed on September 25, 1987, and August 31, 1987, and August 31, 1987, respectively. SEAS panel indications for MSIS actuation are also checked every 62 days on a staggered test basis with 36ST-9SA01 and 36ST-9SA02, ESFAS Subgroup Relay Monthly Functional Test for Trains A & B, respectively.

The staff recognizes that the SEAS panel is installed as an operations convenience and is not safety related. However, the concern remains that malfunctions of this system provide the operators with confusing and conflicting information during stressful situations. Accordingly, the licensee needs to

reexamine their practices and procedures for performing preventive maintenance and/or verifications on this system to improve the reliability of limit switch settings and indications of ESFAS system status.

The inspector concluded that all ESFAS actuated devices received actuation signals from the ESFAS system. Since the ESFAS system output to the individual actuated components is a contact action, a failure of the ESFAS system would not cause an actuated component to fail in mid position because the actuation signal is not removed until the protection system trip condition clears and operator action is taken to reset the actuation at the ESFAS cabinet. The licensee is troubleshooting the position indication discrepancies on the SEAS panel.

3. Valcor Containment Isolation Valves

Following the March 3, 1989 event, a review of the safety equipment status system indicated several containment isolation valves had not closed. A review of the individual component indicator on the control panel found that all but two valves were indicated closed. These two valves are: SGB-UV-228 which is the outboard containment isolation valve on the "B" steam generator cold leg blowdown sample line, and SGB-HV-201 which is the outboard containment isolation valve on the "B" steam generator chemical injection line. Both of these valves showed dual indication, i.e., both the "OPEN" and "CLOSED" lights were illuminated.

Neither the steam generator blowdown system nor the chemical injection system serves a safety function, both being subsystems of the condensate cleanup system. The safety function of valves HV-201 and UV-228 is, therefore, strictly one of containment isolation.

During operation UV-228 is normally open. It is maintained opened by a solenoid actuator and this fails closed upon a loss of power. HV-201 is normally closed during operation. It is maintained closed by spring action, and is opened by a solenoid actuator to permit chemical injection as desired. A position indication problem had been previously identified by the licensee for HV-210 in TSCCR Record #3-88-S01.

The inspector reviewed the work order history for approximately the last six months for all Valcor valves in the steam generator system at all three units. There are about 40 Valcor valves in service in the steam generator system. The review indicated 13 cases of faulty indication; one instance where a terminal block was damaged, one instance of failure to pass a stroke time test, one failure to open on demand, and one failure to close on demand. The Lead Technical Engineer and the Section XI Pump and Valve Engineer indicated that the ASME Code Section XI requirements for safety related valves (such as the HV-201 and UV-228) are as follows: 1) a quarterly stroke

time test, and 2) a biannual position indication verification test.

The inspector also reviewed NPRDS data provided by the licensee. The NPRDS data showed five instances of Valcor valve failures in safety related applications at Palo Verde. These included three failures to pass leak rate tests, one failure to fully open, and one packing leak. Of these failures, four involved solenoid actuated containment isolation valves. At Palo Verde there are a total of 78 Valcor valves used in safety related applications.

An inquiry of the NPRDS provided by the licensee indicated that industry-wide there are 594 Valcor solenoid operated valves in use in safety related applications. There were 64 failures reported to NPRDS. The majority of these failures however, are local leak rate test failures.

A review of Deficiency Evaluation Reports (DERs 83-27, 83-48, and 84-78) found that generic problems associated with Valcor valves had been identified, and that proposed design fixes had been implemented (DCP No. 3CMSG133).

The inspector concluded that all previously identified design deficiencies have been corrected by the licensee. The NPRDS data and work order history suggest no cause for significant concern.

4. Auxiliary Building HVAC Dampers

The Auxiliary Building HVAC dampers perform the safety function of realigning the Engineered Safety Features (ESF) rooms exhaust to the fuel building ventilation system. This isolates the lower (below 100 feet level) auxiliary building essential equipment rooms from the normal building HVAC. Redundant dampers are provided in each flow path and are activated upon receipt of a safety injection actuation signal (SIAS). The dampers are normally held open by instrument air pressure acting through Fisher 656 Diaphragm Actuators. Upon receipt of a SIAS, a solenoid valve acts to discharge the air header (which is common to all actuators in a given train) allowing spring action to close the dampers.

During the March 3, 1989 Unusual Event, a SIAS was received due to low pressurizer pressure. The Auxiliary Building HVAC dampers should, therefore, have gone closed. The licensee reported that a review of the control panels following the event discovered dual position indication on hand switch HAA-HS-115, i.e., both the "CLOSED" and "OPEN" indication lights were illuminated. The correct position at this time would have been "CLOSED". Since hand switch HAA-HS-115 is common to all dampers in the "A" Train, the dual indication suggests that 1 or more dampers failed to go to the fully closed position.

The licensee indicated that the position of all dampers for which position indication is provided at HAA-HS-115 was not verified at the component prior to resetting. The Safety Equipment Actuation System (SEAS) panel however, gave no indication of improper damper position.

A visual examination of 5 of the 6 dampers in the "A" Train and 5 of 6 dampers in the "B" Train was performed by the inspector. Except for light dust on operators HAA-M05 and HAB-M05, the operators were clean and free of debris and rust. The mechanical linkage between the operators and dampers did not appear to be lubricated, however. The technical manual (M598-1850-5) for the dampers (manufactured by Ruskin) does not address lubrication of the linkage. The preventive maintenance (PM) procedure for these isolation dampers (Task #018031) was reviewed and no lubrication is specified. The Systems Engineer for Auxiliary Building HVAC indicated that the linkage does not require lubrication. He further indicated that damper problems, in his experience, have been primarily indication problems.

Operation and maintenance of the dampers was also discussed with the HVAC Technician. He recalled two other occasions (although not on Unit 3) where investigations of dual indications were required. In both cases the dampers were found to have closed with the dual indication caused by a misadjustment of the limit switch.

A review of test procedure (36ST-9SA01) was also performed. This procedure is for all the "A" Train dampers by observing indications of damper actuation. Verification that the dampers must actually change position during the test was provided by the I&C Standards Supervisor. A biannual test (73ST-1DG01) is also performed to verify proper damper actuation.

A review of the work order history for the past 6 months, for all the dampers used in Units 1, 2 and 3 indicated 2 instances where minor corrective maintenance was required, 1 instance where a pressure regulator was replaced, one instance where an air fitting was replaced, and one case in which the investigation found no problems. There were at least 8 records of work to investigate and correct faulty indications.

The failure to verify that all dampers were closed prior to resetting the dampers leaves some uncertainty as to the full closing of the dampers. However, because the SEAS panel showed no improper damper positions, and because all dampers are tested on a monthly basis and the noted failures have been indication failures, it appears that the most likely cause of the dual indication on hand switch HAA-HS-115 is a limit switch misadjustment. The safety significance of a single damper failing to close is small because each flow path is equipped with redundant dampers. The safety significance of limit switch failure is minimal since the safety function of the

system is not affected by operation or non-operation of the indication system. However, the recommendation for improved reliability of SEAS and limit switch indications, contained in Paragraph E.2, above, are applicable here.

F. Emergency Plan Implementing Actions

Control room logs, charts, alarm records and interviews with Operations personnel were used to assess shift crew actions to implement the licensee's emergency plan. At 1:04 am, a Safety Injection Actuation Signal (SIAS) was received on low pressurizer pressure due to excessive steam demand, accompanied by a Containment Isolation Actuation Signal (CIAS). This was rapidly followed by a loss of power to nonessential busses NAN-S01 and NAN-S02 when the fast bus transfer function was prevented due to improper synchronization. These conditions were recorded on the shift log at 1:03 am and 1:04 am log time, respectively. These two conditions each satisfied two Emergency Action Levels for Notification of Unusual Event per EPIP-02, Revision 6, "Emergency Classification," Section 4.3.3 for SIAS on low pressurizer pressure and Appendix A, 1.3 for degraded electrical conditions. However, the Shift Supervisor did not declare the Unusual Event at this time, and turned his attention to the management of the shift crew in establishing RCS natural circulation and an energy path to the environment via the atmospheric dump valves.

At 1:39 am, the Shift Supervisor declared a Notification of Unusual Event based upon the SIAS with low pressurizer pressure, after verifying that atmospheric dump valves could not be readily operated from the control room or the remote shutdown panel. The 34 minute delay between the recognition of conditions requiring classification as an Unusual Event and the declaration of Notification of Unusual Event appears excessive. The licensee needs to assess the reasons for this delay and resolve these issues. The team was concerned that the delay may have been due to staffing inadequacy resulting in an inability of the control room staff to simultaneously deal with the plant mitigation activities and perform the classification and notification functions necessitated by the emergency procedures.

After declaring the Notification of Unusual Event the Shift Supervisor/Emergency Coordinator called upon the Unit 2 Shift Supervisor to assume Unit 3 Emergency Coordinator duties upon arrival. Also, the Unit 3 Shift Supervisor directed that the Satellite Technical Support Center (STSC) be activated and the initial offsite notifications be performed per EPIP-03, Revision 11, "Notification of Unusual Event Implementing Actions." The initial notification was transmitted to the offsite authorities at 1:49 am, as required, with subsequent notification of the NRC via the emergency notification system at 2:05 am. No difficulties were encountered in notifications and communications.

Shortly after the emergency declaration, the Unit 2 Shift Supervisor arrived in the control room, Unit 3, and discussed the EPIP-02

emergency classification with the Unit 3 Shift Supervisor. After the turnover of emergency coordinator duties, the Unit 2 Shift Supervisor/Emergency Coordinator reviewed control room indications against EPIP-02 emergency action levels to determine current status. Minimal safety injection flow indicated no significant Reactor Coolant System (RCS) or primary-to-secondary leakage, and Engineered Safety Feature (ESF) radiation monitor indications were consulted to verify no radioactive release from plant vents. The Emergency Coordinator dismissed personnel assembled in the 140 foot elevation of the auxiliary building Operations Support Center (OSC), retaining an electrical maintenance worker. Deactivation of the OSC did not appear to affect response to the event. The Notification of Unusual Event was terminated at 2:52 am, subsequent to reset of the SIAS and CIAS, and restoration of offsite power to nonessential busses.

1. Radiological Assessments

At 1:08 am, subsequent to the loss of offsite power, the Unit 3 radiation protection staff halted all work in controlled areas, assembled personnel in the 140 foot level of the auxiliary building and restricted entry to the controlled area. Radiological surveys were initiated in the 120 foot and 140 foot levels of the auxiliary and radwaste buildings, and the control room areas.

By 1:30 am all general area dose rates in the 120 foot and 140 foot levels of the auxiliary building and radwaste building were verified as less than 0.5 mR/hr. During the surveys several frisking stations began to exhibit count rate increases to 1500 cpm due to noble gas buildup from leaking valves in the 129 foot elevation of the auxiliary building valve gallery after loss of normal building ventilation. The radwaste control room was declared part of the controlled area due to noble gas buildup of 1000-5000 cpm on large area wipes.

Control room ESF ventilation had been established upon SIAS/CIAS at 1:04 am.

At 1:39 am the Unit 3 Radiation Protection Monitor initiated a preliminary manual dose assessment using EPIP-14, Revision 0, "Dose Assessment," which employs main steam line radiation monitors RU-139 and RU-140 to determine release rate. However, power to the radiation monitoring system PDP 11 minicomputer had been lost. Therefore, main steam line radiation monitor indication was only available locally at the auxiliary building, grade level post-accident monitoring unit (PAMU). A second radiation protection technician in the control room obtained a Portable Indication and Control unit (PIC) and proceeded to the PAMU to obtain local main steam line monitor indication. However, the technician could not successfully connect the PIC unit to the RU-139, RU-140 PAMU. (The licensee needs to take measures to assure that compensatory equipment is compatibly configured and readily connectable to the installed plant equipment, as necessary.)

The R.P. technician returned to the control room and the default isotopic release rates provided in EPIP-14 for an atmospheric dump valve steam release were used. However, the Radiation Protection Monitor improperly substituted the isotopic release rates for noble gases and radioiodines into blanks provided for dose rates from the main steam line monitors, RU-139 and RU-140. Also, the Radiation Protection Monitor was unaware that main steam safety valves had lifted because the Control Room staff apparently failed to communicate this critical information to Radiation Protection. These errors yielded a projected site boundary dose rate and thyroid dose commitment two orders of magnitude lower than intended. However, these errors did not affect the final protective action recommendation, and an appropriate recommendation was issued. However, it is clear that the R.P. Monitor did not properly perform the necessary data entry. Couple this with the failure of control room personnel to notify the Monitor that a SG safety had lifted, resulting in inaccurate release assessments, it is clear that the licensee needs to take measures to improve the performance of the R.P. and control room staff.

At approximately 1:45 am, the Unit 2 Shift Supervisor/Emergency Coordinator dispatched an R. P. Technician to the "A" and "B" main steam line rooms to conduct surveys and provide worker coverage. The surveys confirmed normal area dose rates and no measurable large area smear contamination.

Upon request by the Unit 3 Radiation Protection Monitor, the Unit 2 STSC was manned by a Unit 2 radiation protection technician at 1:50 am to perform computer based dose assessments using the MESOREM computer program. After several minutes due to busy phone lines, the Unit 2 radiation protection technician reestablished contact with the Unit 3 R. P. Monitor at 2:10 am to obtain plant status for MESOREM input. No radiological data regarding the main steam release was forthcoming due to the loss of control room RMS indication and no local RU-139, 140 indication. Unit 3 Radiation Protection then requested Unit 2 personnel to obtain particulate, iodine and gas samples downwind of the steam release and analyze the samples in the Unit 2 laboratory.

At 2:30 am, a MESOREM dose assessment was completed at Unit 2, using default release rates for a steam generator tube rupture concurrent with 1% failed fuel clad. The initial assessment indicated that no Protective Action Recommendation was necessary. A second assessment at 2:50 am again indicated no PAR was necessary. A gas grab sample obtained at the Unit 2 Auxiliary Building Roof did not contain any gamma activity. At 3:10 am, the particulate and iodine sample analysis was completed with no activity identified.

From the loss of nonessential power at 1:04 am to approximately 3:00 am, noble gas in the radwaste building and auxiliary

building continued to spread, until airborne area postings were required at the 140 foot elevation of the auxiliary building access control point. The apparent cause of the noble gas contamination was recognized leakage from valves in the 129 foot elevation in the Auxiliary Building Valve Gallery during volume control tank gas stripping in progress prior to the loss of power. Upon loss of normal building ventilation, gas levels began to increase locally and diffuse to other areas, until ultimate realignment of normal building ventilation at approximately 3:00 am. During this time, automated personnel contamination monitors were lost, and Radiation Protection personnel performed manual frisk surveys of personnel exiting the controlled area. Many cases of gas contamination were revealed during manual frisking. A queue had formed for frisk exit surveys and many workers were being held pending decay and diffusion of gas contamination. These conditions indicate that continued uncontrolled leakage of noble gas may cause recurring access control problems during periods of impaired building ventilation upon loss of power. The team recommends that the causes of this noble gas contamination be assessed and resolved.

The Unit 3 Chemistry Staff performed assessment actions following the termination of the Unusual Event to estimate the actual magnitude of the radioactive release via the main steam lines. This assessment spanned from 1:05 am, immediately prior to Main Steam Safety Valve (MSSV) lift, to 16:34, when steam generator blowdown demineralizers were restored. The assessment was divided into two unplanned release permits. The first, Permit 893057, employed steam flows consistent with a safety valve release from 1:05 am to 1:35 am. These steam release rates were conservative given that the MSSVs lifted only two minutes, and the auxiliary feedwater pump turbine steam release was small. Permit 893058 was prepared for the period following the MSSV releases to the restoration of normal condensate and blowdown system operation. Permit 893058 steam release flow was based upon auxiliary feedwater flow to the steam generators.

Isotopic activity in the main steam was estimated from gaseous activity levels in condensed main steam samples, particulate and iodine samples from the condenser off-gas system, and tritium samples from the off-gas system. The condensed main steam samples exhibited a significant increase of noble gas activity over pre-trip values due to the unavailability of normal secondary gas removal. Since condenser off-gas representative sampling was lost upon loss of condenser vacuum, the condenser off-gas sample activities were multiplied by the post-trip/pre-trip main steam noble gas ratio.

Based upon the unplanned release permit calculations, the total release was expected to account for 1 micro-rem whole body dose and 3 micro-rem thyroid dose to a receiver at the site boundary.

No technical specification limiting conditions for operation or administrative limits were exceeded.

2. Fuel and Steam Generator Integrity

During the February 22, 1989 to March 3, 1989 reactor power coastdown, the ratio of reactor coolant Iodine-131 activity to Iodine-133 activity trended to 1.8, and dose equivalent I-131 increased from 2E-2 uCi/gm to 3.4E-2 uCi/gm. These data were consistent with one fuel clad failure with a probable second failure in a region of varying neutron flux.

After the reactor trip on March 3, 1989, normal coolant iodine spiking to 8.5E-2 uCi/gm occurred, with a normal Iodine-131/133 spike ratio of 2. Dose equivalent iodine level stabilized at 1E-2 uCi/gm.

RCS offgas activity, as measured by stripped gas sample was steady at 0.3-0.5 uCi/gm before and after shutdown.

RCS cesium activity was 1E-3 uCi/gm prior to shutdown, with a post-shutdown spike to 1E-2 uCi/gm and a subsequent drop to 2.4E-3 uCi/gm.

Post-shutdown data indicated satisfactory fuel performance, with no additional clad failures.

Prior to the March 3, 1989 Unusual Event the steam generator tube leakage rate was less than 0.01 gpm based upon Tritium balance calculations performed on March 3 per procedure 74CH-9ZZ66, Revision 2, "Determination of Primary to Secondary Leak Rate." During the event, safety injection flow data and radiological survey data near the main steam safety valves did not indicate a significant increase in steam generator tube leakage. Steam generator blowdown sample isolation valves were opened after SIAS/CIAS reset at 2:41 am. However, Operations did not immediately open the steam generator blowdown isolation valves as the blowdown system required realignment from the condensate system to the blowdown demineralizer system prior to reestablishing blowdown flow. During the period of blowdown isolation, the blowdown sample line was drawing liquid from a dead pipe leg. At 14:30, March 3, blowdown flow was reestablished and representative steam generator samples were obtained and analyzed. Primary-to-secondary leakage was verified as less than 0.01 gpm.

G. Performance of Control Room Indications for Radwaste Sump Level, Containment Temperature, Containment Humidity, and the Radiation Monitoring System (RMS)

Upon the loss of nonessential busses NAN-S01 and NAN-S02 with a loss of motor control center M19 on SIAS at 1:39 am, March 3, 1989, several control room indications employed to confirm safety

functions and assess radioactive releases to the environment were disabled for various periods of time.

Emergency Procedure 43EP-3ZZ01, "Emergency Operations", tasked the Shift Technical Advisor (STA) with the responsibility to frequently monitor plant conditions and safety functions. Procedure 43EP-3ZZ01, Appendix BB supplied a checklist matrix to identify and trend degraded conditions. Appendix BB was initiated by the Unit 3 Shift Technical Advisor at 1:20 am. At the time the STA attempted to obtain radwaste sump levels, containment temperature and containment humidity, loss of offsite power had occurred and the indications were not available due to loss of power to motor control center M19, which was removed from nonessential bus upon receipt of SIAS at 1:39 am. When operators reset M19 on essential power, the indications were restored and noted at 1:50 am. Following restoration of containment instrumentation, a 12 inch increase in the east radwaste sump level was observed from 2:10 am to 2:45 am due to leakage from overheated reactor coolant pump seals on RCP 1B.

In addition, loss of nonessential busses NAN-S01 and NAN-S02 caused the loss of the radiation monitoring system PDP 11/34 minicomputer system, which provides RMS data to CRT displays in the control room and radiation protection office. Upon loss of power, indications for ESF ventilation monitors, plant vent and post-accident monitors were obtained from the remote indicating and control units (RIC) located in the control room horseshoe area. Indications for main steam line monitors were available at the PAMU located between the auxiliary and turbine buildings at grade level. However, the portable indication and control unit used did not connect to the PAMU, preventing quantification of the release. The RMS minicomputer was restored at 3:03 am, after nonessential busses NAN-S01, S02 were regained.

The licensee had recognized the loss of these indications during prior loss-of-offsite-power events, and had initiated corrective actions for some of the deficiencies. Plant Change Package 86-03-RD-005-00 contained instructions for placing sump level receivers J-RDE-LT-410 and J-RDE-LT-411 on Class 1E bus, and had been implemented at Unit 1 on January 5, 1988 and at Unit 2 on May 26, 1988. Unit 3 was due to undergo this change during the 1989 refueling outage.

Plant Change Package 86-03-SQ-028-00 specified changes to install Class 1E power to the Radiation Monitoring System minicomputer, as well as adding vital power for RU-2, 3, 4, 5, 7, 8, 9, 10, 23 and 26. This change had been completed at Unit 2 on June 3, 1988, and was due for completion at Units 1 and 3 during their respective 1989 refueling outages.

The loss of containment temperature and humidity indications had been identified with the items above during an emergency operating procedure review performed by NRC. Commitments to take corrective actions for these deficiencies were transmitted to NRC by letter 161-00108-JGH/RAB, dated March 27 , 1987. No completion dates were

given for the corrective actions proposed. At the time of the March 3, 1989 transient, no concrete steps had been taken to implement corrective actions for loss of containment temperature and humidity indications. The Augmented Inspection Team requested that the licensee provide a schedule for implementation of their corrective actions for this deficiency.

H. Damage to Reactor Coolant Pump 1B Seals

Following the reactor/turbine trip the Nuclear Cooling water (NC) pumps supplying RCP seal cooling were lost, and the SIAS/CIAS did not isolate RCP seal bleedoff automatically, which is as per system design. In this configuration, the only cooling to the RCP seals is from seal injection supplied by the charging pumps. Although, by procedure a running RCP may not be operated longer than ten minutes in this condition, there is no restriction if the pump is idle. However, if both NC cooling water and seal injection are lost, then RCP seal bleedoff must be isolated to prevent hot RCS water from overheating and damaging RCP seals and bearings. Control room operators manually isolated RCP bleedoff at approximately 0114 by shutting the two containment isolation valves (inside and outside) and an isolation valve (CHV-507) to the pressure relief valve inside containment (PSV-199). This isolation valve is designed to ensure bleedoff flow will not exist through PSV-199. The low bleedoff flow alarm at 01:14:45 is consistent with operator statements that bleedoff flow was secured. At approximately the same time that seal bleedoff was isolated, operators had to secure charging pumps to prevent overfilling the pressurizer since letdown had isolated. This action also secured RCP seal injection. The RCP may be maintained in this condition (not running, with no seal injection or NC cooling, and bleedoff isolated) for up to 20 minutes before seal or bearing damage will occur. However, at 01:17:54 the alarm typer indicates seal bleedoff flow returned to normal. This could be explained by the opening of CHV-507, which fails open upon loss of instrument air pressure, and the relieving of PSV-199 relief valve. This theory is supported by the nitrogen backup valve to instrument air opening at 01:08:42 (setpoint 85 psig) and by a noticed increase in Reactor Drain Tank (RDT) level, which is the PSV-199 discharge path. Under this condition, RCP seal or bearing damage can be expected in one minute. The licensee needs to assess the adequacy of the design/application of CHV-507, especially considering the effects of instrument air loss.

Evidence from operator logs indicate that a charging pump was not restored until 0229 and seal injection and bleedoff flow not reestablished until 0252. Operators subsequently noticed unusual seal pressure breakdowns on RCP 1B indicative of seal failure. Operators attempted unsuccessfully to restore proper seal pressures to 1B RCP through a series of actions including isolating and restoring seal injection and bleedoff. Later, after reestablishing NC flow and restarting RCP's 1A and 2A, operators had to trip RCP 2A due to indicated high temperatures and pressures at the high

pressure cooler inlet, which would be indicative of journal bearing failure.

The licensee presently plans to examine all RCP seals during planned RCP disassembly for the refueling outage and to test the CHV-507 isolation valve under low instrument air conditions to further confirm a root cause of failure.

I. Steam Generator Safety Valve Performance

During the transient on March 3, 1989, the Main Steam Relief Valve 3SGEPSV579 cycled several times during the transient. The Relief Valve was reported to be lifting at approximately 1200 psig to 1220 psig. Because the Technical Specification setpoint is 1250 psia ±1% the valve was declared inoperable and quarantined pending further investigation.

The licensee had also observed a bolt, evidently from another safety valve, laying on the floor and quarantined that valve, also. Further investigation revealed that the bolt was merely a test rig mounting/attachment bolt and, as such, performed no critical function. The bolt had merely been dislodged from its normal stowage location. This valve was then removed from quarantine.

A review of the maintenance and surveillance testing shows that the valve was tested in 10/86 and adjustments were made to the setpoint and no other valve setpoint testing has been performed since. The only physical work performed was the removal of manual lifting arm by site MOD 3-SM-SG-002. The Work Request History does not identify a history of problems with PSV579. The PSVs Surveillance Tests are required to be performed once every five years to verify the setpoints and adjust as required. The next test schedule was to be performed on March 6, 1989. A review of the work performed during the construction time frame revealed that valve PSV579 (Serial #BSO-08621) was sent to Wyle Laboratories for checking the set pressure, blowdown rate and seat leakage in March 1984. During the testing at Wyle, valve PSV579 failed the required reseat pressure test. The valve was reworked at Wyle and retested satisfactorily.

The primary potential root cause seems to be that the valve can't maintain the ±1% tolerance. Per the vendor and the FSAR, the specified tolerance range on the PSV is ±3%; which valve PSV579 was within.

Other potential root causes could be as follows: seat leakage; spring relaxation; operation gap; increased spring temperature; and possible testing errors, including testing equipment tolerances and/or human error.

The licensee developed a troubleshooting plan for SGEPSV579. The plan provides for:

1. Confirmation of proper alignment with valve vendor. Determine what "as found" conditions the vendor requires to be taken to support their root cause determination;

2. Documentation of as found conditions of valve by photography of valve conditions;

3. Removal of valve from system and shipment to vendor;

4. Disassembly of valve at vendor's maintenance facility;

5. Vendor inspection of the mechanism parts for damage and wear with engineering present;

6. Vendor determination of the root cause from the evidence obtained during troubleshooting; and

7. Repeat of the setpoint check.

J. Inability to Operate MSIV Bypass Valve from Control Room

The Unit 3 Shift Supervisor indicated in his written statement that the control room operator could not open MSIV bypass valve SG V-169 from the control boards. The Shift Supervisor's statement further indicates that SG V-169 was handjacked open, locally, to align steam to steam bypass valves 7 and 8.

The off going day shift Auxiliary Operator's log (comments) indicates that SG V-169 was broken and closed. The licensee is still investigating whether the valve was broken by manually handjacking the valve open on graveyard or during day shift when the valve was closed.

The inspector concludes that the cause of SG V-169 not opening from the control room is that the operator failed to shut SG V-048 (the downstream manual throttle valve), as required by good operating practice to equalize pressure across SGV-169 and preclude opening SGV-169 against a high differential pressure.

This is reinforced by the Main Steam procedure. Procedure No. 430P-3SG01, Rev. 5 (Main Steam) requires in Section 5.0 (Placing The Main Steam Lines In Service With The Main Steam Isolation Valves Closed) that:

Paragraph 5.3.31	Close MSIV Bypass Throttle Valve SG-V048"
Paragraph 5.3.32	Open Steam Generator One MSIV Bypass Valve V-169 Using Both Hand Switches On B06"
Paragraph 5.3.32.1	Open SGA-HS-169A"
Paragraph 5.3.34.2	Open SGB-HS-169B"

The above procedure does not address manually handjacking the air operated MSIV bypass valves open. There is a manual operating procedure posted at the valve for that purpose.

The operator apparently failed to realize that the normal steaming configuration is SG-V169 closed and SG-V048 open.

VI. Summary of Major Concerns Identified by the AIT

A. Human Performance/Human Factors

The AIT identified the following concerns in this area. The principal concerns are summarized here to clearly indicate that the licensee needs to resolve these issues in an expeditious manner.

1. Atmospheric Dump Valves (ADVs)

   a. Manual operation of the ADVs is infrequent and licensee personnel could not remember ever being trained in manual ADV operations.

   b. Auxiliary Operators (AOs) were sent to the remote shutdown panel to operate ADVs. The AOs have not been trained, and are not procedurally recognized, to operate the remote shutdown panel.

   c. Instrument Air root cutout and ADV operator equalizer valves were not adequately labeled or location referenced in procedures.

   d. The plant simulator does not adequately replicate the actual plant in ADV operation. In actual operation, the valves will not always open until a 30% demand signal is present for at least 30 seconds. In the simulator the ADVs respond in about 10 seconds and will respond to demands less than 30%.

   e. At the local ADV operating station the directions of ADV handwheel motion are different, creating confusion for the operators.

   f. The operating environment in the MSSS rooms was poor with high noise levels, no lighting at the platform, and steam in the atmosphere. The high noise level contributed to communications difficulties.

   g. The licensee needs to assess the necessary tools in possession of AOs. At least one AO didn't have a means to cut locking devices in his possession contributing to difficulty in removing an ADV clevis pin.

   h. The licensee needs to reassess the adequacy of procedures for manual operation of the ADVs to correct key omissions and improve clarity.

2. The licensee needs to perform analysis of all AO and RO tasks to identify those that are infrequently performed and take action to assure that periodic training is instituted to

provide assurance that infrequently performed operations will be properly accomplished.

3. The licensee needs to reassess the training needs, and provisions to provide for those needs, of Auxiliary Operators to assure that AOs are adequately knowledgeable and capable in those areas where they are expected to perform.

4. Switchyard/Power Source Reliability

   a. During the inspection the team became aware that the PVNGS switchyard is under the control of Salt River Project (the APS power distribution organization), which also performs any needed maintenance in the yard. ANPP needs to change this practice because licensee's are responsible for activities which can challenge safety systems.

   b. Events at Unit 1 and Unit 3 identified difficulties in resetting switchgear relays. The licensee needs to take action to assure that appropriate operations staff are fully knowledgeable and trained in the requirements and processes employed in resetting switchgear protective relays.

B. Engineering/Design Concerns

The AIT identified the following concerns in the engineering area of cognizance. These are summarized below to clearly indicate that the licensee needs to resolve these issues in an expeditious manner.

1. Atmospheric Dump Valves (ADVs)

   a. The ADVs have exhibited a history of unreliability and problems over the years which were not adequately resolved by the licensee. In addition, valve manufacturer, Architect/Engineer, and consultant recommendations to improve ADV reliability have not been implemented by the licensee.

   b. ADV manual operator handwheel mechanisms are not consistent at the local station, creating operator confusion.

   c. Operators reported the presence of steam in the MSSS rooms following the lifting of the secondary safety. The licensee needs to assess the adequacy of the safety valve tail pipe/guard pipe design to preclude steam from blowing back into the MSSS rooms.

   d. During the inspection it became known that the licensee had removed the Instrument Air/Nitrogen system isolation check valve from the Inservice Testing (IST) Program. The

licensee needs to submit IST program revisions to include testing of these important check valves.

e. The licensee needs to reevaluate their practices for periodic testing of the ADVs; particularly, to assure that the valves are periodically tested under conditions that they are expected to operate under when called upon.

2. Emergency/Essential Lighting

a. The licensee needs to implement effective measures to assure adequate lighting in the vicinity of the ADVs to assure that operators can effectively read the procedures and perform their required tasks.

b. The licensee needs to assess the need to strip essential lighting from Class 1E buses on Loss of Power/Safety Injection and assess the adequacy of procedures for re-application of essential lighting loads to the Class 1E buses.

c. The licensee needs to assess the adequacy of emergency/essential lighting, in other plant areas in addition to the MSSS, to perform the required activities in those areas as well as lighting of ingress/egress routes.

3. Steam Bypass Control System

a. The SBCS has a history of unreliability and problems which have not been fully analyzed and resolved by the licensee. For example, the licensee performs calibration and functional test of the control system at an 18 month frequency and preventive maintenance on a biannual frequency. A re-assessment of the adequacy of this frequency needs to be performed to assure that calibrations, functional tests, and Preventive maintenance are commensurate with the importance of this system..

4. Instrument Air/Nitrogen System

a. Engineering needs to understand, and take action to deal with as necessary, the reasons for the drop in instrument air pressure to 64 psi shortly after loss of the instrument air compressors. The assessment needs to consider accumulator sizing, air usage, and system leakage.

b. Engineering needs to assess the adequacy of measures to assure an adequate instrument air quality at locations of close tolerance air devices.

c. Engineering needs to assess the design adequacy of the nitrogen pressure regulator and take measures to improve the reliability.

5. Radiation Protection (RP)

a. The team observed that the RP department portable radiation indication and control unit power cord was not compatible with Post-Accident Monitor Unit receptacles for RU-139 and RU-140, inhibiting implementation of compensatory measures. This is in need of engineering attention.

b. Gas leakage from neoprene valve packing in Volume Control Tank gas stripper causes high airborne levels resulting in controlled access point posting as a contaminated area. This has the potential for personnel contamination and access control problems in emergencies. Engineering needs to take measures to preclude this situation.

6. Switchyard/Power Source Reliability

a. ANPP needs to perform a comprehensive study of power source reliability, assess the facts, and make reliability improvement recommendations. Further, ANPP needs to improve the reliability of the fast transfer feature. These actions are necessary to reduce the probability of placing the plants in natural circulation.

7. Remote Shutdown Panel

Engineering needs to evaluate and resolve the potential effects on human performance due to the loud audible alarm in the RSP room when switches are out of normal position.

C. Preventive Maintenance (PM) Program

During the inspection the team became concerned with PM Programs exercised by the licensee on Switchgear, Atmospheric Dump Valves, Steam Bypass Control System, and the Emergency/Essential Lighting System. The licensee needs to perform a comprehensive analysis of manufacturer's requirements, and ANPP implementation of these in PM programs; in particular, the adequacy of methods used to delay or waive PM performance.

In addition, the licensee needs to reassess the adequacy of measures to periodically verify/check limit switch settings on applicable ESFAS equipment to assure that operators are provided reliable information on the positioning of ESFAS equipment following actuation.

D. Communications

The licensee needs to critically assess the adequacy of communications and provisions made to assure adequate communications.

During this event communications were hampered by: (1) high noise levels in the MSSS rooms; (2) the unavailability of head sets in high noise areas; (3) high radio channel traffic; and (4) out of date phone lists which inhibited the ability to contact the electrical system engineer. In addition, the failure to properly communicate, to Radiation Protection, the fact that a Main Steam Safety had lifted contributed to errors in calculating isotopic releases. Further, this event was marked by several situations wherein operations did not provide clear, specific instructions to AOs. The licensee needs to take measures to assure that instructions are clear, specific, understood, and that the staff clearly understands the unacceptability to proceeding with activities in the face of uncertainty as to method or expected results.

VII. Exit Interview

A. March 10, 1989.

On March 10, 1989, the AIT conducted an Exit Interview with ANPP personnel identified in Appendix C. During the Exit meeting the licensee was appraised of the team's findings and agreed to the following major points:

1. The licensee must thoroughly understand the ADV system problems, why they didn't operate as designed during the Unit 3 event, and what is required to assure the reliability of the ADVs.

2. Prior to restart of Unit 1 and as soon as possible at Unit 2:

   a. Complete operator training for all crews in the remote and local operation of the ADVs using both the normal instrument air and nitrogen sources and local manual operation at the ADV location.

   b. Reliable lighting must be installed to assure adequate lighting at the local operator platforms to assure that adequate lighting is available for operators to accomplish this necessary activities in the event of loss of normal lighting.

3. The fast transfer capability must be fixed in order to decrease the amount of time spent in natural circulation. ANPP agreed to evaluate a time table and discuss the time table with the NRC.

4. With regard to the Unit AC electrical power supply systems, ANPP must perform a comprehensive study, assess the facts and make recommendations to improve power source reliability as soon as possible. ANPP agreed to evaluate a time table and discuss this with the NRC.

B. The AIT Leader met briefly with Mr. Haynes on March 20, 1989 and emphasized the need to get to the bottom of the ADV situation and comprehensively improve the ANPP PM program.

C. A. D. Johnson met with Mr. Haynes on March 31, 1989, and expressed the concerns that the corrective actions applied to the steam bypass valves had not been generically applied to the similar designed ADVs and that problems persisted with emergency lighting.

UNIT 1 ATMOSPHERIC DUMP VALVE TESTING

VALVE	TEST DATE	TEST METHOD	TEST SUMMARY
178	18-Mar	STEP/NITROGEN	30% DEMAND; NO BONNET PRESSURE AVAIL.; SMOOTH STROKING TO 30%
		INCREMENTAL/NITROGEN	20% DEMAND; NO BONNET PRESSURE AVAIL.; SUBSTANTIAL VALVE OSCILLATIONS TO 62%; VALVE SHUT; TEST TERMINATED
	21-Mar	STEP/NITROGEN	10% DEMAND; 32 - 8 PSIG BONNET PRESSURE; PILOT MOVEMENT ONLY
		STEP/NITROGEN	20% DEMAND; 13 - 5 PSIG BONNET PRESSURE; SMOOTH STROKING TO 22%
		STEP/NITROGEN	30% DEMAND; 10 - 6 PSIG BONNET PRESSURE; SMALL VALVE OSCILLATIONS DAMPED TO 30% OPEN.
		STEP/NITROGEN	40% DEMAND; 10 - 5 PSIG BONNET PRESSURE; SMOOTH STROKING TO 44%
		STEP/NITROGEN	40% DEMAND; 10 - 5 PSIG BONNET PRESSURE; SMOOTH STROKING TO 45%
	23-Mar	STEP/NITROGEN	30% DEMAND; 10 - 12 PSIG BONNET PRESSURE; SUBSTANTIAL VALVE OSCILLATIONS TO 62%; OSCILLATIONS DAMPED WITHIN 2 SECS; VALVE MODULATED TO 30%
		STEP/NITROGEN	30% DEMAND; 8 - 10 PSIG BONNET PRESSURE; SUBSTANTIAL VALVE OSCILLATIONS TO 57%; OSCILLATIONS DAMPED WITHIN 2 SECS; VALVE MODULATED TO 30%
		STEP/NITROGEN	30% DEMAND; 6 - 7 PSIG BONNET PRESSURE; SUBSTANTIAL VALVE OSCILLATIONS TO 64%; OSCILLATIONS DAMPED WITHIN 2 SECS; VALVE MODULATED TO 31%
		STEP/NITROGEN	30% DEMAND; 6 - 7 PSIG BONNET PRESSURE; SUBSTANTIAL VALVE OSCILLATIONS TO 60%; OSCILLATIONS DAMPED WITHIN 2 SECS; VALVE MODULATED TO 33%
	24-Mar	STEP/IA	30% DEMAND; NO INSTRUMENTATION INSTALLED; SMOOTH STROKE TO 30%
		STEP/IA	30% DEMAND; NO INSTRUMENTATION INSTALLED; SMOOTH STROKE TO 30%
		STEP/IA	30% DEMAND; NO INSTRUMENTATION INSTALLED; SMOOTH STROKE TO 30%
	25-Mar	STEP/IA	30% DEMAND; 6-8 PSIG BONNET PRESSURE; SMOOTH STROKE TO 30%
		STEP/IA	30% DEMAND; 6-8 PSIG BONNET PRESSURE; SMOOTH STROKE TO 30%
		STEP/IA	30% DEMAND; 6-8 PSIG BONNET PRESSURE; SMOOTH STROKE TO 30%
		STEP/IA	30% DEMAND; 6-8 PSIG BONNET PRESSURE; SMOOTH STROKE TO 30%
	3-Apr	STEP/NITROGEN	30% DEMAND; 110 PSIG NITROGEN SUPPLY; SMOOTH STROKE TO 20%
			30% DEMAND; 100 PSIG NITROGEN SUPPLY; SMOOTH STROKE TO 20%
			30% DEMAND; 90 PSIG NITROGEN SUPPLY; SLIGHT OSCILLATIONS DAMPED IN 300 ms; SMOOTH STROKE TO 30%

PREPARED 4/7/89

UNIT 1 ATMOSPHERIC DUMP VALVE TESTING

VALVE	TEST DATE	TEST METHOD	TEST SUMMARY
179	16-Mar	INCREMENTAL/NITROGEN	10% DEMAND - NO VALVE MOVEMENT; 20% PILOT MOVEMENT; 30% - SMOOTH STROKING TO 34%; 40% - SMOOTH TO 44%; 50% - SMOOTH TO 50% +. NO TEST INSTRUMENTATION INSTALLED. 93 PSIG NITROGEN SUPPLY PRESSURE.
	6-Apr	STEP/NITROGEN	30% DEMAND; 95 PSIG NITROGEN SUPPLY; SUBSTANTIAL OSCILLATIONS; POSITIONER DAMAGED, TEST TERMINATED
184	14-Mar	STEP & INCREMENTAL/N2	VALVE FAILED TO OPEN WITH A 50% DEMAND SIGNAL -- NITROGEN PRESSURE WAS APPROXIMATELY 95 PSIG -- BONNET PRESSURE TAP NOT INSTALLED
	21-Mar	STEP/IA*	10% DEMAND; 1145 PSIG BONNET PRESSURE; NO VALVE MOVEMENT
		STEP/IA*	20% DEMAND; 60-110 PSIG BONNET PRESSURE; PILOT MOVEMENT ONLY
		STEP/IA*	30% DEMAND; 56 - 42 PSIG BONNET PRESSURE; VALVE STEPPED TO 20% THEN SHUT
		STEP/IA*	40% DEMAND; 44-34 PSIG BONNET PRESSURE; SMALL OSCILLATIONS; OPEN TO 40%
		STEP/IA*	40% DEMAND; 8 - 2 PSIG BONNET PRESSURE; SMOOTH STROKING OF VALVE TO 45%
		STEP/IA*	30% DEMAND; 7-2 PSIG BONNET PRESSURE; SMOOTH STROKING TO 32%
		INCREMENTAL/IA*	50% DEMAND; 9-4.5 PSIG BONNET PRESSURE; SMOOTH STROKING 53%

* Nitrogen Regulator problems encountered -- IA used for testing

PREPARED 4/7/89

UNIT 1 ATMOSPHERIC VALVE TESTING

VALVE	TEST DATE	TEST METHOD	TEST SUMMARY
185	18-Mar	STEP/NITROGEN	10% DEMAND; NO BONNET PRESSURE AVAILABLE; OPENED AND MODULATED @ 10%
		STEP/NITROGEN	20% DEMAND; SUBSTANTIAL VALVE OSCILLATIONS EXPERIENCED; VALVE SHUT; TEST SECURED DUE TO POSITIONER CALIBRATION PROBLEMS; POSITIONER RECALD.
	23-Mar	STEP/NITROGEN	30% DEMAND; 30 - 36 PSIG BONNET PRESSURE; VALVE "STEPPED" TO 30%
		STEP/NITROGEN	30% DEMAND; 23 - 29 PSIG BONNET PRESSURE; VALVE "STEPPED" TO 30%
		STEP/NITROGEN	30% DEMAND; 25 - 30 PSIG BONNET PRESSURE; SMALL OSCILLATIONS DAMPED TO APPROXIMATELY 36%.
		STEP/NITROGEN	30% DEMAND; 30 - 36 PSIG BONNET PRESSURE; VALVE "STEPPED" TO 38%
		MANUAL STROKE	5 TIMES TO APPROXIMATELY 20%.
		STEP/NITROGEN	30% DEMAND; VALVE STROKED SMOOTHLY TO 30%
		STEP/NITROGEN	30% DEMAND; 30 - 40 PSIG BONNET PRESSURE; VALVE OPENED TO 39% WITH MINOR OSCILLATIONS FOR APPROXIMATELY 2 SECS.
		STEP/NITROGEN	30% DEMAND; 27 - 40 PSIG BONNET PRESSURE; PILOT LIFTED WITH ZERO DEMAND; VALVE OPENED TO APPROXIMATELY 39% WITHOUT OSCILLATIONS.
		STEP/NITROGEN	30% DEMAND; 9 - 11 PSIG BONNET PRESSURE; VALVE OPENED TO 39% WITHOUT VALVE OSCILLATIONS
	24-Mar	STEP/IA	30% DEMAND; NO INSTRUMENTATION INSTALLED; SMOOTH STROKE TO 30%
		STEP/IA	30% DEMAND; NO INSTRUMENTATION INSTALLED; SMOOTH STROKE TO 30%
	25-Mar	STEP/IA	30% DEMAND; 10-12 PSIG BONNET PRESSURE; SMOOTH STROKE TO 30%
		STEP/IA	30% DEMAND; 30 PSIG BONNET PRESSURE; SMOOTH STROKE TO 30%
		STEP/IA	30% DEMAND; 30 PSIG BONNET PRESSURE; SMOOTH STROKE TO 30%
		STEP/IA	30% DEMAND; 30 PSIG BONNET PRESSURE; SMOOTH STROKE TO 30%
	4-Apr	STEP/NITROGEN	30% DEMAND; 95 PSIG NITROGEN SUPPLY; 25 PSIG BONNET PRESSURE; SUBSTANTIAL OSCILLATIONS; TEST TERMINATED
			30% DEMAND; 95 PSIG NITROGEN SUPPLY; 7 PSIG BONNET PRESSURE; SMOOTH STROKE TO 30%

PREPARED 4/7/89

UNIT 1 ATMOSPHERIC DUMP VALVE TESTING

VALVE	TEST DATE	TEST METHOD	TEST SUMMARY
185	18-Mar	STEP/NITROGEN	10% DEMAND; NO BONNET PRESSURE AVAILABLE; OPENED AND MODULATED @ 10%
		STEP/NITROGEN	20% DEMAND; SUBSTANTIAL VALVE OSCILLATIONS EXPERIENCED; VALVE SHUT; TEST SECURED DUE TO POSITIONER CALIBRATION PROBLEMS; POSITIONER RECALD.
	23-Mar	STEP/NITROGEN	30% DEMAND; 30 - 36 PSIG BONNET PRESSURE; VALVE "STEPPED" TO 30%
		STEP/NITROGEN	30% DEMAND; 23 - 29 PSIG BONNET PRESSURE; VALVE "STEPPED" TO 30%
		STEP/NITROGEN	30% DEMAND; 25 - 30 PSIG BONNET PRESSURE; SMALL OSCILLATIONS DAMPED TO APPROXIMATELY 36%.
		STEP/NITROGEN	30% DEMAND; 30 - 36 PSIG BONNET PRESSURE; VALVE "STEPPED" TO 38%
		MANUAL STROKE	5 TIMES TO APPROXIMATELY 20%.
		STEP/NITROGEN	30% DEMAND; VALVE STROKED SMOOTHLY TO 30%
		STEP/NITROGEN	30% DEMAND; 30 - 40 PSIG BONNET PRESSURE; VALVE OPENED TO 39% WITH MINOR OSCILLATIONS FOR APPROXIMATELY 2 SECS.
		STEP/NITROGEN	30% DEMAND; 27 - 40 PSIG BONNET PRESSURE; PILOT LIFTED WITH ZERO DEMAND; VALVE OPENED TO APPROXIMATELY 39% WITHOUT OSCILLATIONS.
		STEP/NITROGEN	30% DEMAND; 9 - 11 PSIG BONNET PRESSURE; VALVE OPENED TO 39% WITHOUT VALVE OSCILLATIONS
	24-Mar	STEP/IA	30% DEMAND; NO INSTRUMENTATION INSTALLED; SMOOTH STROKE TO 30%
		STEP/IA	30% DEMAND; NO INSTRUMENTATION INSTALLED; SMOOTH STROKE TO 30%
	25-Mar	STEP/IA	30% DEMAND; 10-12 PSIG BONNET PRESSURE; SMOOTH STROKE TO 30%
		STEP/IA	30% DEMAND; 30 PSIG BONNET PRESSURE; SMOOTH STROKE TO 30%
		STEP/IA	30% DEMAND; 30 PSIG BONNET PRESSURE; SMOOTH STROKE TO 30%
		STEP/IA	30% DEMAND; 30 PSIG BONNET PRESSURE; SMOOTH STROKE TO 30%
	4-Apr	STEP/NITROGEN	30% DEMAND; 95 PSIG NITROGEN SUPPLY; 25 PSIG BONNET PRESSURE; SUBSTANTIAL OSCILLATIONS; TEST TERMINATED
			30% DEMAND; 95 PSIG NITROGEN SUPPLY; 7 PSIG BONNET PRESSURE; SMOOTH STROKE TO 30%

PREPARED 4/7/89

UNIT 2 ATMOSPHE[illegible]UMP VALVE TESTING

VALVE	TEST DATE	TEST METHOD	TEST SUMMARY
178	18-Mar	INCREMENTAL/NITROGEN	50% DEMAND; NO BONNET PRESSURE AVAIL.; SMOOTH STROKE TO 50%
	23-Mar	STEP/NITROGEN	30% DEMAND; 2-8 PSIG BONNET PRESSURE; SMOOTH STROKE TO 30%
		STEP/NITROGEN	30% DEMAND; 2-8 PSIG BONNET PRESSURE; SMOOTH STROKE TO 30%
		STEP/NITROGEN	30% DEMAND; 2-8 PSIG BONNET PRESSURE; SMOOTH STROKE TO 30%
		STEP/NITROGEN	30% DEMAND; 2-8 PSIG BONNET PRESSURE; SMOOTH STROKE TO 30%
179	18-Mar	INCREMENTAL/NITROGEN	50% DEMAND; NO BONNET PRESSURE AVAIL.; SMOOTH STROKE TO 50%
	20-Mar	STEP/IA	30% DEMAND; NO BONNET PRESSURE AVAIL.; SMOOTH STROKE TO 30%
		INCREMENTAL/IA	50% DEMAND; NO BONNET PRESSURE AVAIL.; SMOOTH STROKE TO 50%
	23-Mar	STEP/NITROGEN	30% DEMAND; 2-8 PSIG BONNET PRESSURE; SMOOTH STROKE TO 30%
		STEP/NITROGEN	30% DEMAND; 2-8 PSIG BONNET PRESSURE; SMOOTH STROKE TO 30%
		STEP/NITROGEN	30% DEMAND; 2-8 PSIG BONNET PRESSURE; SMOOTH STROKE TO 30%
		STEP/NITROGEN	30% DEMAND; 2-8 PSIG BONNET PRESSURE; SMOOTH STROKE TO 30%
184	18-Mar	INCREMENTAL/NITROGEN	NITROGEN REGULATOR PROBLEM; TESTING SECURED
	20-Mar	INCREMENTAL/IA	50% DEMAND; NO BONNET PRESSURE AVAIL.; SMOOTH STROKE TO 50%
185	18-Mar	INCREMENTAL/NITROGEN	50% DEMAND; NO BONNET PRESSURE AVAIL.; SMOOTH STROKE TO 50%
	23-Mar	STEP/NITROGEN	30% DEMAND; 2-10 PSIG BONNET PRESSURE; SMOOTH STROKE TO 30%
		STEP/NITROGEN	30% DEMAND; 2-10 PSIG BONNET PRESSURE; SMOOTH STROKE TO 30%
		STEP/NITROGEN	30% DEMAND; 2-10 PSIG BONNET PRESSURE; SMOOTH STROKE TO 30%
		STEP/NITROGEN	30% DEMAND; 2-10 PSIG BONNET PRESSURE; SMOOTH STROKE TO 30%

PREPARED 4/7/89

UNIT 3 ATMOSPHE[illegible]UMP VALVE TESTING

VALVE	TEST DATE	TEST METHOD	TEST SUMMARY
178	27-Mar	STEP/NITROGEN	10% DEMAND; VALVE COLD, STROKED SMOOTHLY TO 6%; 5300 LBf MAX FORCE
		STEP/NITROGEN	20% DEMAND; VALVE COLD, STROKED SMOOTHLY TO 14%; 7000 LBf MAX FORCE
		STEP/NITROGEN	40% DEMAND; VALVE COLD, STROKED SMOOTHLY TO 31%; 8200 LBf MAX FORCE
		STEP/NITROGEN	40% DEMAND; VALVE COLD, STROKED SMOOTHLY TO 33%; 8400 LBf MAX FORCE
	30-Mar	STEP/NITROGEN	30% DEMAND; VALVE COLD; 1/2 PACKING REMOVED; STROKED TO 20%; 4200 LBf MAX FORCE
		STEP/NITROGEN	30% DEMAND; VALVE COLD; 1/2 PACKING REMOVED; STROKED TO 20%; 4300 LBf MAX FORCE
		INCREMENTAL/NITROGEN	50% DEMAND; VALVE COLD; 1/2 PACKING REMOVED; STROKED TO 38%; 4900 LBf MAX FORCE
	1-Apr	SEE TEST SUMMARY	ACTUATOR STROKED DE-COUPLED FROM VALVE STEM; SPRING PRELOAD CALCULATED AT APPROX. 3000 LBf WITH A SPRING CONSTANT OF APPROX. 277 LBf/IN; (design values are much less)
	6-Apr	DISASSEMBLY	ACTUATOR DISASSEMBLED -- FOUND EXTRA SPRING IN ACTUATOR -- EXPLAINS 4/1 DATA ABOVE
179		DISASSEMBLY	ACTUATOR BROKEN DURING MANUAL OPERATION ATTEMPT FOLLOWING TRIP -- VALVE AND ACTUATOR DISASSEMBLED -- NO MECHANICAL DEFICIENCIES FOUND
184	1-Apr	STEP/NITROGEN	10% DEMAND; VALVE COLD; STROKED TO 10%; 4500 LBf MAX FORCE
		STEP/NITROGEN	20% DEMAND; VALVE COLD; STROKED TO 20%; 5000 LBf MAX FORCE
		STEP/NITROGEN	30% DEMAND; VALVE COLD; STROKED TO 33%; 5600 LBf MAX FORCE
		STEP/NITROGEN	40% DEMAND; VALVE COLD; STROKED TO 43%; 6100 LBf MAX FORCE
		STEP/NITROGEN	50% DEMAND; VALVE COLD; STROKED TO 53%; 6450 LBf MAX FORCE
		STEP/NITROGEN	10% DEMAND; VALVE COLD; STROKED TO 12%; 4300 LBf MAX FORCE
		STEP/NITROGEN	20% DEMAND; VALVE COLD; STROKED TO 21%; 4900 LBf MAX FORCE
		STEP/NITROGEN	30% DEMAND; VALVE COLD; STROKED TO 33%; 5500 LBf MAX FORCE
		STEP/NITROGEN	40% DEMAND; VALVE COLD; STROKED TO 43%; 5900 LBf MAX FORCE
		STEP/NITROGEN	50% DEMAND; VALVE COLD; STROKED TO 52%; 6300 LBf MAX FORCE
		STEP/NITROGEN	80% DEMAND; VLAVE COLD; STROKED TO 77%; 7100 LBf MAX FORCE
		STEP/NITROGEN	80% DEMAND; VLAVE COLD; STROKED TO 77%; 7000 LBf MAX FORCE
		STEP/NITROGEN	80% DEMAND; VLAVE COLD; STROKED TO 76%; 7000 LBf MAX FORCE
185	1-Apr	INCREMENTAL/NITROGEN	90% DEMAND; VALVE COLD; STROKED TO 60%; 11,500 LBf MAX FORCE
		INCREMENTAL/NITROGEN	90% DEMAND; VALVE COLD; STROKED TO 68%; 11,500 LBf MAX FORCE
		INCREMENTAL/NITROGEN	90% DEMAND; VALVE COLD; PACKING GLAND FOLLOWER LOOSENED; STROKED TO 77%; 6,900 LBf MAX FORCE

PREPARED 4/7/89

UNITED STATES
NUCLEAR REGULATORY COMMISSION
REGION V
1450 MARIA LANE, SUITE 210
WALNUT CREEK, CALIFORNIA 94596-5368

MAR 8 1989

MAR 8 1989

CONFIRMATORY ACTION LETTER

Docket No. 50-530
License No. NPF-74

Arizona Nuclear Power Project
P.O. Box 52034
Phoenix, Arizona 85071-2034

Attention: Mr. Donald B. Karner
Executive Vice President

Gentlemen:

The purpose of this letter is to confirm our understanding of the actions you intend to take regarding the Unusual Event which occurred on March 3, 1989. Based on the discussions held between Mr. A. E. Chaffee, of my staff, and you, it is our understanding that your actions will include, but will not necessarily be limited to, the following:

1. You will develop a plan for investigating this event and present it to the NRC prior to commencing troubleshooting of the atmospheric dump valves; reactor coolant pump fast transfer circuitry; steam bypass control system; offsite and onsite power supply breakers, switches and interlocks associated with this event; all valves and dampers which failed to automatically activate when called upon during this event; and, the power supply to the Control Room radiation monitor. This plan will include provisions for prior notice to the NRC of your intent to release equipment from quarantine for troubleshooting or other essential purposes. This notice shall provide sufficient time for NRC representatives to arrange for review of your specific troubleshooting procedures and to be present at the job site. None of the above shall preclude those ANPP actions needed to maintain and ensure plant safety.

2. You will conduct a thorough investigation and obtain a full understanding of the March 3, 1989, Unusual Event and define the pre-restart and post-restart corrective actions needed as a result of this event.

3. You will brief the NRC upon completion of your investigation and will not restart (enter Mode 2) the Palo Verde Unit 3 facility prior to receiving NRC concurrence.

The NRC intends to review this event and your investigation of it with an Augmented Inspection Team (AIT) led by Mr. D. F. Kirsch of Region V. He will arrive onsite at 8:00 a.m., March 4, 1989, to introduce his team and discuss the scope of the AIT inspection with ANPP management representatives.

If our understanding concerning your proposed actions, as summarized above, is not correct, you should promptly notify this office in writing.

Sincerely,

John B. Martin
Regional Administrator

cc: J. Taylor, DEDO
T. Murley, NRR
E. Jordan, AEOD
G. Knighton, NRR
G. Holahan, NRR
M. Virgilio, NRR
Document Control Desk (RIDS)

Appendix B

Persons Contacted

A. Arizona Nuclear Power Project

*D. Karner, Executive Vice President
*J. G. Haynes, Vice President, Nuclear Production
*W. C. Marsh, Plant Director/Investigation Director
*W. Quinn, Director, Nuclear Safety and Licensing
*L. Papworth, Director, QA/QC
*J. Tench, Acting Director, Site Services
*C. Rogers, Manager, Licensing
*R. Gouge, Unit 3 Operations Manager
*J. Bailey, Unit 3 Assistant Plant Manager
*J. M. Allen, Relief Plant Manager
J. E. Allen, Director, Engineering and Construction
*D. N. Willsey, Suprevisor, Emergency Planning
*H. Bieling, Manager, Emergency Planning
*G. Sowers, Manager, Engineering Evaluations Department
*T. Shriver, Manager, Compliance
*J. LoCicero, Manager, ISE
*C. Russo, Assistant Director, QA/QC
*R. Badsgard, Supervisor, Engineering and Construction
*M. Oren, Investigation Team Leader
*K. McAndless-Clark, Lead Compliance Engineer
*A. Gehr, Legal Advisor, Snell & Wilmer
*L. Clyde, Supervisor, STA
*R. Butler, Director, Standards and Technical Support
D. Carnes, Shift Supervisor
D. Smith, Assistant Shift Supervisor
M. Barron, Control Room Operator
S. Wackenstedt, Control Room Operator
M. Sanchez, Control Room Operator
**S. Gary, Auxiliary Operator
**P. Koenig, Auxiliary Operator
**C. Eckley, Auxiliary Operator
**G. Smitendorf, Auxiliary Operator
**R. Oakley, Auxiliary Operator
**J. Spooner, Auxiliary Operator
**D. Hettrick, Shift Technical Advisor
*W. Ide, Unit 1 Plant Manager
*D. Heinicke, Unit 2 Plant Manager
*M. Beyer, Supervisor, Unit 3 Work Control
*E. Sterling, Manager, Nuclear Engineering
*C. Stevens, Supervisor, Nuclear Engineering
R. Bernier, ANPP Licensing
J. Summy, I&C Engineering Supervisor
A. Hartwig, I&C System Engineer
S. Karimi, Compliance Engineer
T. Radtke, Shift Supervision
D. Delong, HVAC Technician
F. Lopez, HVAC Work Order Scheduling

T. Weber, Lead Technical Engineer
G. Irick, Section XI Pump and Valve Engineer
M. Muhs, Shift technical Adviser
K. Cutler, I&C Standards Supervisor
R. Zarbo, System Engineer for HVAC
T. Engbring, Lead Mechanical Engineer
D. Laskos, IIT, Equipment Quarantine
D. Garchow, IIT, Event Evaluation
K. Johnson, IIT, Engineering Team Leader/BOP
L. Henson, IIT, Electrical Team Leader
A. Johnson, Compliance Engineer
L. Florence, IIT, Operations Team Leader
S. L. Kesler, Lead Elecrical Engineer
R. C. Mill, Sr. Relay Technician (SRP)
G. R. Frere, Electrical Engineer Transmillion Lines, (SRP)
D. Perale, Electrical Engineer, Relay Protection (SRP)
R. G. Farmer, Principle Engineer APS Consultant
R. D. Hopkins, Electrical System Engineer
D. Withers, I&C Engineering Supervisor
L. Mitchell, Lighting, Systems Engineer
C. Day, Electrical Maintenance Standards, Supervisor
D. R. Legg, I&C Systems Engineer (SBCS)
G. T. Anderson, I&C Systems Engineer
S. Quan, Shift Technical Advisor
B. Berg, Protective Relaying and Control
L. Spiers, Quality Systems Supervisor
P. Studer, Quality Engineer
P. Mann, Quality Engineer
A. Johnson, Compliance Engineer
J. Scott, Chemistry Manager, Unit 3
W. Sneed, Radiation Protection Manage, Unit 3
J. Dahl, Lead Radiation Protection Technician, Unit 3
L. Jensen, Radiation Protection Technician, Unit 3
M. Moore, Radiation Protection Technician, Unit 3
C. Gray, Lead Chemistry technician, Unit 3
G. Eimer, Shift Supervisor, Unit 2
H. Bealing, Manager, Emergency Preparedness and Fire Protection
C. Clark, Supervisory Compliance Engineer
B. Mendoza, System Engineer
J. Taggart, System Engineer
L. Perea, Lead System Engineer
J. Kirby, Nuclear Production Support

B. <u>EG&G Intertech</u>
*R. Belote, Senior Consultant

C. <u>Control Components, Inc.</u>
C. Sterud, Principal Engineer
C. Hart, Field Service Administrator

* Attended March 10, 1989 Exit Meeting
** Transcribed Interview