CHAPTER 8: ELECTRIC POWER

8.1 INTRODUCTION

Fermi 2 has a net electrical capacity of approximately 1170 MWe generated by a single turbine generator at 22 kV, and stepped up to 345 KV by two parallel transformers. These transformers are connected on the high side to the Fermi 2 345-kV station. This station is interconnected by two double circuit 345-kV lines to the Edison system (Figure 8.2-1). When Fermi 2 becomes operational at full power, the total capacity of the Edison system will be approximately 10,429 MW. When operating in conjunction with the Consumers Power Company, with whom a coordinated system has been established having four interconnections at 345 kV, the total integrated system capacity will be approximately 16,709 MW. Edison also has strong 345-kV interconnections with Ontario Hydro (two interconnections) and Toledo Edison (three interconnections).

Also on the Fermi site is the permanently shutdown Enrico Fermi Atomic Power Plant, Unit 1 (Fermi 1).

Fermi 1 also includes four gas turbine peaking units, each generator having a name plate capacity of 18.8 MVA. These units, as limited by turbine design ratings, have a net electrical output of 62.2 MW (summer) and 75.9 MW (winter). One of these units has the ability to be started by a diesel without the need for an external source of power.

The output of the gas turbine peaking units is connected to the 120-kV station, and this station is connected to the Edison system by three 120-kV lines (Figure 8.2-2).

All lines at both 120 kV and 345 kV are run on a common right-of-way; however, the right-of-way is of such a width that a 345-kV tower falling cannot interrupt all the lines on the right-of-way. The 120-kV and 345-kV transmission lines leave the plant in a common right of way for approximately 5 miles before diverging into different rights-of-way to the final termination at individual stations. Auxiliary power for Fermi 2 comes from both the 120-kV and 345-kV systems. Each system supplies half of the balance-of-plant (BOP) loads and one of the two redundant safety divisions.

Plant auxiliary power for engineered safety feature (ESF) loads for Division I of the two divisions is derived from a 15/20-MVA, 13.2/4.16-kV transformer connected to the secondary of a 120/13.2-kV transformer on bus 101, with an alternate feed from the secondary of the 120/13.8/13.8-kV gas turbine peaking unit transformer. The other division's power is supplied by one secondary winding of a 37.3-MVA, 345/4.16/4.16-kV transformer. It should be noted that Fermi 2 has no unit auxiliary transformer. All plant auxiliaries are fed in normal operation from the 120-kV and 345-kV systems indicated above.

The principal voltage for auxiliary power is 4.16 kV, with smaller loads being supplied from 480-V ac load centers and motor control centers (MCCs).

In case of a total loss of offsite power, the unit requirements for power for safe shutdown are supplied by four 2850-kW diesel generators, two per division. Within a division, the two diesel generators are not run in parallel; each supplies a load group comprising about half of the division's emergency power requirements.

The dc power is supplied from three 260-V batteries, two batteries for ESF loads and one battery for BOP loads, to supply dc motors and motor-operated valves. Each battery is center tapped to

provide 130-V dc power for control functions (Figures 8.3-9 and 8.3-11). There are two 48-V center-tapped batteries to supply source and intermediate range nuclear instrumentation and radiation monitoring equipment (Figure 8.3-10).

The ESF loads that require electric power to perform their safety function, the function that is performed, and the type of power that is required (ac/dc) are listed in Tables 8.1-1 and 8.1-2.

The design of the Fermi 2 electric power system is up to date with respect to the state of the art for nuclear plants and takes into account all NRC regulations, guides, and design criteria, including General Design Criteria 17 and 18. Regulatory Guides 1.6, 1.9, 1.30, 1.32, and 1.63, and IEEE Standards 308-1971, 279-1971, 323-1971, 317-1972, and 334-1971 are followed, except as noted in Subsection 8.3.1.2.2.2. IEEE 323-1974 was taken into account on equipment for which the purchase specification was executed on or after November 15, 1974.

TABLE 8.1-1 ENGINEERED SAFETY FEATURE, AC LOADS

Engineered Safety Feature, AC Loads	Safety Function Performed
Core spray system (including pump motors, controls, and supporting devices)	Provides emergency core cooling by spraying water directly on the core
Residual heat removal (RHR) system (including pump motors, controls, and supporting devices)	Provides emergency core cooling by restoring and maintaining the water level in the reactor core at an adequate height; provides containment cooling using the containment spray mode of operation; removes residual heat from the reactor core during shutdown for refueling or servicing
RHR service water system and ultimate heat sink (including pumps, motors, fans, controls, and supporting devices)	Provides cooling to the essential features of the RHR complex, backup core flooding, and ultimate heat sink for all vital cooling systems
Main steam line monitoring system	Provides indication of gross fuel failure
Containment inboard isolation valves	Isolates the primary containment
Emergency equipment closed cooling water system (including pump motors, controls, and supporting devices)	Provides cooling water to the equipment needed for emergency shutdown
Diesel generator cooling water pumps, vent fans, and associated devices necessary for the operation of the standby power supply	Allows operation of the standby power supply
Main control room ventilation and air conditioning system	Ensures operation of safety-related control and instrumentation devices within their rated temperature
Standby gas treatment system	Reduces the consequences of off-site radiation doses resulting from a postulated accident
Combustible gas control system	Reduces post-LOCA combustible gas mixtures to acceptable levels
Engineered safety feature ventilation cooling system	Ensures operation of safety-related equipment

TABLE 8.1-2 ENGINEERED SAFETY FEATURE, DC LOADS

Engineered Safety Feature, DC Loads	Safety Function Performed
Automatic depressurization system	Relieves the pressure of the reactor pressure vessel to the containment pressure suppression pool
High-pressure coolant injection system accessories only (valves, pumps)	Maintains sufficient reactor water inventory for a small-break area LOCA
Containment outboard isolation valves	Isolates the primary containment
Control power for Class 1E switchgear and other devices included in the safety systems	Provides reliable control of the safety equipment

8.2 OFFSITE POWER SYSTEM

8.2.1 Description

8.2.1.1 Offsite Power Sources

Offsite power is available for the auxiliary power requirements of Fermi 2 at two different voltage levels, 345 kV and 120 kV.

Fermi 2 exports its net generation capability of approximately 1170 MWe at 345 kV after transformation by two parallel transformers from the generation level of 22 kV. The unit is interconnected with the 345-kV transmission system by two circuits or lines with one line per single tower, as shown in Figure 8.2-1. Each circuit is installed on a single tower and the two lines run to the Brownstown Station located about 16 miles away. These lines run over generally flat farmland. Each 345 kV line is protected by two identical and independent line differential schemes (A and B) using digital relays and fiber optic communication paths to provide high speed fault clearing. Each of these digital relays also provides additional time coordinated line protection, as a supplement to the differential schemes. Breaker failure protection is provided as part of the Backup (B) relaying and provides input to the (A) and (B) transfer trip logic. There are two independent fiber optic paths that link Fermi 2 to Brownstown Station. Each digital relay receives a fiber pair from each path as a normal and hot standby input. All four line protection schemes (A and B for each line) provide transfer tripping to Brownstown Station using the fiber optic communication paths as part of the breaker failure protection scheme. Both lines are equipped with time delayed automatic breaker reclosing to restore service to the line in the event of a momentary line fault (e.g., lightning).

The Fermi 2 to Brownstown lines leave the plant on opposite sides of a 500-ft right-of-way with three 120-kV lines routed between them. A plan view of the transmission corridor is shown in Figure 8.2-2; a sectional view of the transmission corridor appears in Figure 8.2-3. The spacing of the lines is such that collapse of either of the 345-kV towers would not interrupt the other 345-kV line, although it can interrupt two of the three 120-kV lines. The Fermi-Brownstown circuits will run to Brownstown Station via 345-kV towers located on the 500 ft out-of-plant transmission corridor to the east side of the Detroit-Toledo Expressway (I-75) and then via 345-kV towers on the Monroe-Brownstown corridor. Angle towers are used for all turns. The towers and lines have been designed for a simultaneous wind loading of 8 lb/ft^2 with a 1/2-in. ice load or, equivalently, a 1-in. ice load without wind load.

Although Fermi 2 does not generate power at 120 kV, it has strong interconnections with the 120-kV system (Figure 8.2-4). There are three 120-kV lines on separate towers running into the plant along the same right-of-way as the 345-kV lines. One line terminates at the Custer substation 13.9 miles away passing through the Shoal substation, the second at Radka 21.7 miles away, and the third at Brownstown 16.3 miles away after passing through the Swan Creek Substation and the Berlin Substation. The 120-kV lines separate from the 345-kV Brownstown line at various points of the right of way and therefore do not follow the 345-kV lines the entire distance to the Brownstown Station but may share right of ways with additional lines (see Figure 8.2-2). These lines run through generally flat farmland with no unusual terrain features. These lines are protected with distance-directional comparison-

carrier first-line relaying, with redundant distance relay backup. All three lines have automatic reclosing after a time delay to restore service in case of transient faults.

The 120-kV switchyard at Fermi 2 is tied to the 120-kV system with three lines. The 120-kV Fermi-Swan Creek line to the Brownstown station has a strong 345/120-kV source at Brownstown, in addition to two other 120-kV lines. The line to Custer Station ultimately ties to the Consumers Power Company's 120-kV system (Whiting A-1). The Radka line is ultimately tied to Superior Station, which has five additional lines at 120 kV, including two strong ties to the 345-kV transmission system at Wayne.

In March 2003, ownership of the Edison transmission system, including both switchyards, transferred to an independent purchaser, ITC Holdings. Edison and ITC Holdings are members of the East Central Area Reliability Council (ECAR), which also includes other utilities located in the midwestern region of the United States. The total peak load served by ECAR members is about 100,000 MW, and the ECAR members have about 108,000 MW of installed generating capacity.

ECAR members are required to maintain a minimum level of contingency reserves totaling 3 percent of their daily peak load projection, to protect against the unexpected loss of generating sources or other contingencies. An additional 1 percent of the daily peak load projection for each day is required to be maintained by the ECAR members as Load and Frequency Regulation Reserve, for load and frequency regulation. Some of the reserves are available immediately upon request, to meet the contingencies like unit trip and all reserves are required to be available within 10 minutes.

ECAR members are also required to share their reserves in the event of a unit trip, or some other type of system emergency that jeopardizes firm load, under a process referred to as Automatic Reserve Sharing. Thus, there will always be sufficient reserves available to maintain reliability for customers on the Detroit Edison system, even in the event of a trip of the largest unit.

The interconnection capability of Michigan Electric Coordinated System (MECS) study area, which includes Detroit Edison, will conservatively be approximately 3000 MW. ECAR studies show that adverse conditions outside the MECS study area may at times limit the capability to 2500 MW. This capability is sufficient to allow the forced outage of Edison's largest unit while its second largest unit is out of service.

Edison has the following interconnections with other utilities:

a.	Consumers Power	four 345-kV circuits five 120/138-kV circuits
b.	Ontario Hydro	two 345/230-kV circuits* two 230-kV circuits
c.	Toledo Edison	three 345-kV circuits

* The 230-kV portion of these circuits is located in Ontario.

8.2.1.2 Switchyards

The 345-kV switchyard is located approximately 150 yards from the plant. Its physical configuration is shown in Figure 8.2-5 and its electrical configuration is shown in Figure 8.3-1. The 345-kV switchyard is arranged in a nominal double breaker-double bus configuration. Transformer SS65, the auxiliary transformer serving Division II engineered safety feature (ESF) buses, is fed from the east bus (bus 301) of the switchyard. Switchyard circuit breakers are opened automatically by the associated line or bus relaying. Each breaker has two independent trip coils. The switchyard circuit breakers CM and CF are controlled in the Fermi 2 main control room. Switchyard circuit breakers BT, BM, DM and DF are controlled by transmission company, ITC Holdings. The switchyard has two control batteries, one for each of the two channels of protection (including trip coils) so that a battery or associated protection system failure will not prevent tripping and resultant isolation of faults. Transfer tripping of backup or remote terminal circuit breakers is accomplished through redundant fiber optic links.

The only switchyard fault that could lead to a sustained loss of power to transformer SS65 is a fault affecting bus 301 or transformer SS65. In this case, the feed from the 120-kV switchyard to transformer SS64 will still be available for Division I power and safe shutdown. Failure of circuit breakers CF, DF or BM will cause a shutdown of bus 301.

If circuit breaker CF should fail, service to bus 301 can be restored in the following manner. Bus 301 would be deenergized with circuit breakers DF, BM and CM open due to backup protective relaying operation which isolated the faulted breaker. Visual inspection of relaying operation indicators would be made along with visual breaker inspection. If it is determined that a breaker failure caused the backup protective relaying to operate, permission would be obtained from the Central System Supervisor to restore service.

The defective circuit breaker CF would be isolated by opening the two sets of manual disconnects associated with circuit breaker CF. This is done at the control pedestal located at the base of the disconnects. Once the disconnects have been opened and tagged for safety purposes, circuit breaker DF and/or BM may be closed to energize bus 301, restoring service to system service transformer 65. The circuit breaker operations required to complete such an alignment is controlled by ITC Holdings. The time required to complete such an operation could vary from a minimum of 1 hr to a maximum of 8 hr.

Similarly, if circuit breaker DF should fail, bus 301 would be deenergized with circuit breakers DM, BM and CF open due to backup protective relaying operation which isolated the faulted breaker. Circuit breaker CM would be opened due to loss of the main machine on loss of system service transformer 65. The defective circuit breaker DF would be isolated by opening the manual disconnects associated with circuit breaker DF. Once the disconnects have been opened, the circuit breaker BM can be closed to energize bus 301, restoring service to system service transformer 65. Alternatively, circuit breakers CF and CM can be closed to energize bus 301, restoring service to system service transformer 65, after opening the intermediate switchyard motor-operated disconnect switches to disconnect the main unit transformers from the circuit breakers CF and CM. The time required to complete such an operation could vary from a minimum of 1 hr to a maximum of 8 hr.

Similarly, if circuit breaker BM should fail, bus 301 would be deenergized with circuit breakers DF, BT and CF open due to backup protective relaying operation which isolated the faulted breaker. Circuit breaker CM would be opened due to loss of the main machine on loss of system service transformer 65. The defective circuit breaker BM would be isolated by opening the manual disconnects associated with circuit breaker BM. Once the disconnects have been opened, the circuit breaker DF can be closed to energize bus 301, restoring service to system service transformer 65. Alternatively, circuit breakers CF and CM can be closed to energize bus 301, restoring service to system service transformer 65, after opening the intermediate switchyard motor-operated disconnect switches to disconnect the main unit transformers from the circuit breakers CF and CM. The time required to complete such an operation could vary from a minimum of 1 hr to a maximum of 8 hr.

The 120-kV switchyard, located at Fermi l about 1/4 mile from Fermi 2, is arranged as a radial-fed double bus as shown in Figure 8.3-1. The switchyard is arranged in such a way that any line fault will not interfere with the ability to energize transformer 1 and, therefore, Division I power. The only circumstance that could result in a sustained loss of power to transformer 1 is a fault affecting the 120-kV switchyard bus 101. In this case, offsite power would be available from the 345-kV switchyard to Division II, which meets minimum safety-feature power requirements. Failure of circuit breakers GH or GD to interrupt a fault will cause a loss of bus 101. However, the power to Division I can be restored by one of two alternatives: the defective breaker can be isolated by use of disconnect switches and the bus reenergized or the source to Division I can be transferred to transformer CTG-11 secondary, thus feeding from 120-kV switchyard bus 102 (Figure 8.3-1).

The l20-kV switchyard was originally built to service the Fermi 1 liquid metal fast breeder reactor which has been permanently shut down. Four 18.8-MW gas turbine peaking units are installed near Fermi l on the Fermi site. Peaking units are of GE heavy-duty industrial design, rated at 18.8 MVA each.

These units may be started individually from the local panels in the combustion turbine generator control rooms. They may also be started from the Fermi 2 control room by a supervisory control system.

The peaker units are located approximately 200 ft south of the 120-kV switchyard, and are enclosed in a separate, fenced-in area. Electrically, there are two units to a peaker bus (buses 1-2A and 3-4A). These buses in turn are connected to the CTG-11 transformer via direct, buried, 25-kV insulated cables. These units operate at 13.8 kV, but the cables to the CTG-11 transformer were replaced with more conservatively rated 25-kV cables to improve the overall reliability of the CTG-11 transformer and the peaking unit block. However, any one of them has sufficient capacity to supply all plant ESF loads connected to Division I buses. One of the gas turbine peaking units is diesel-cranked and can be started without offsite power. The output of this generator can be used to start the other three.

8.2.1.3 Offsite Power Supply to the Plant from the Switchyards

There are five transformers supplying offsite power to Fermi 2. Two of the transformers, SS66 and SS68, provide power to the circulating water pump house and the general service water pump house, respectively, and both are located near their respective pump houses. The

third transformer, SS69, provides power to both the circulating water pump house and the general service water pump house. See Subsection 8.3.1.1.1.

The other two transformers, SS64 and SS65, are located on the west side of the turbine building. Transformer SS65 is a three winding 345/4.16/4.16-kV, 28/15/13 MVA (OA) oil, 37.3/20/17.3 MVA (FA) forced air cooled, outdoor transformer. One secondary winding supplies power to the recirculation pump motor-generator sets. The other winding supplies approximately half of the balance-of-plant (BOP) loads and all of the Division II Class 1E loads. Transformer SS65 is connected to bus 301 of the 345-kV switchyard via overhead lines.

Transformer SS64 is a 13.2/4.16-kV, 15/20-MVA, OA/FA outdoor transformer. It supplies Division I Class 1E power requirements and BOP loads. It receives its power from the 13.2-kV bus 11 via a buried bus duct. Bus 11 in turn receives its power from transformer 1, a nominal 120/13.2-kV, 24/32-MVA, oil-cooled outdoor transformer. Transformer SS64 is equipped with a +/- 15 percent automatic acting Load Tap Changer and a fixed tap setting of -5 percent which maintains adequate Division 1 voltages with 120 kV voltage variations between +10 percent and -20 percent which envelopes the +5 percent to -6.7 percent range as described in Section 8.2.2.5.1. Without action from the Load Tap Changer, the Division 1 voltages would not remain adequate for the entire range of 120 kV voltages as specified in Section 8.2.2.5.1. The Load Tap Changer has a 20 second delay before movement and is set to maintain 121.8 V ac +/1 V ac. After the 20 second time delay the Load Tap Changer is capable of moving one tap approximately every two seconds resulting in a voltage change of approximately 0.9375 percent for each movement. Transformer 1 is located within the 120-kV switchyard and is connected to bus 101 of that switchyard. An alternate feed has been supplied to transformer SS64 from bus 1-2B. Bus 1-2B in turn receives power via an overhead enclosed bus duct from transformer CTG-11, a 120-kV to 13.8-kV, three winding, 60/68-MVA, oil-filled transformer. This transformer also serves as the step-up transformer for the four gas turbine peaking units located near Fermi 1. Transformer CTG-11 is located within the 120-kV switchyard and is connected to bus 102 of that switchyard.

CTG 11-1 is utilized as the alternate ac source for a Station Blackout event and to support response by the Dedicated Shutdown Panel to an Appendix R fire. An alternate CTG started with the standby diesel generator can also be utilized as an alternate source of this ac power.

The feeders from transformers SS64 and SS65 are run into the plant in completely separated systems to preserve the independence of the two offsite supplies. Transformer SS64 is run in underground ducts and in nonsegregated cable bus. Transformer SS65 is run in nonsegregated cable bus only.

8.2.1.4 Design Capabilities for Periodic Inspection and Testing

The protective equipment on the 345-kV offsite power system is in itself redundant. Each of the two 345 kV lines have two identical and independent relay schemes utilizing fiber optic communications. There are two independent fiber communication paths between Fermi 2 and Brownstown Station, which serve each relay. The redundant relay schemes for each line operate from separate ac current and potential sources and the dc control is fed from separate batteries. The control for each line relay scheme operates separate redundant trip coils at each breaker. Breaker failure protection is provided as part of the backup (B) line relaying

and provides input to (A) and (B) relaying schemes as available, to provide tripping of adjacent breakers and transfer trip for remote breakers.

The use of two relaying schemes with the redundant batteries and trip coils, along with current shorting switches and potential throwover switches, allows for the inservice shutdown of any one relay and control scheme for testing while maintaining one relaying scheme in service. The use of the double breaker-double bus scheme allows for the shutdown of one breaker without shutdown of the line itself. The breaker may then be tested with the relaying schemes as desired.

The 345-kV bus 301 has two protective bus differential relaying schemes, either one of which may be shut down for testing while maintaining the other in service. All control operations except actual tripping of the breakers can be done while maintaining bus 301 in service. Associated breaker operations may be completed one at a time to maintain service to the bus.

The 120-kV offsite system allows for periodic testing in the following manner. In addition to the combustion turbine generators, the 120-kV switchyard, which ultimately supplies Division I ESF buses, has three sources of power, composed of three 120-kV lines. Any of the lines may be shut down for complete periodic testing and still maintain two sources of power to the switchyard.

The design of the Edison system and the excellent reliability and percentage of correct operations are a result of this design and the effort to give maximum service and reliability. This design is in full conformance with General Design Criterion 18.

8.2.1.5 Conclusions

It is concluded that the design and configuration of the offsite power system conform to the requirements of IEEE 308-1971, Regulatory Guide 1.32, except for Parts 1d, 1e, and 2b, and General Design Criteria 17 and 18 of 10 CFR 50, Appendix A. These sections required compliance with Regulatory Guides 1.75 and 1.93. For discussions of those guides, see the applicable sections of Appendix A of this UFSAR.

8.2.2 Analysis

8.2.2.1 Loss of Fermi 2

Analysis of the Edison grid and surrounding systems was conducted, assuming the sudden loss of Fermi 2 during a period of maximum system demand and heavy power import. System stability is generally more critical during periods of heavy power import. A study was conducted using a digital computer program that models the Edison power system and those systems with which it has strong interconnections. The model treats large generators in both the Edison system and surrounding systems as discrete entities.

The analysis of the Edison offsite power grid stability, assuming a sudden trip of Fermi 2, indicates that the grid is stable.

The studies also indicate that the grid is capable of supplying the necessary offsite power if Fermi 2 is lost. This conclusion is based on the following analysis of the studies:

a. There is no evidence of cascading resulting from either high circuit loadings or depressed network voltages, because:

   1. Transient and steady-state postfault network voltages are at or near prefault conditions

   2. Transient and steady-state postfault network line flows are within emergency ratings.

b. Based on generator rotor angle changes, no machines tend toward instability

c. Transient and steady-state postfault Fermi auxiliary supply voltages are near prefault conditions.

A series of studies that consider a large Edison import have been made to examine the consequence of a system fault combined with a circuit breaker failure. This study assumed that:

a. The system modeled was that planned by Edison for early 1979 assuming Fermi 2 operational

b. System load was at the peak expected value for that period

c. Edison was importing 1300 MW of power, approximately 15 percent of net demand and roughly half of the system's net import capability

d. One 800-MW unit at the Monroe plant, the large fossil station nearest the Fermi site, was not operating

e. Only the Fermi 2 generator was in service at the Fermi plant

f. The postulated contingency was a three-phase fault on the Fermi-Brownstown 345-kV #3 circuit adjacent to Fermi 2

g. In addition, a circuit breaker failure at the Fermi 345-kV switchyard was assumed, which actuates backup relaying, resulting in disconnection of Fermi 2 from the grid.

The stability evaluation consisted of a prefault load flow, a transient stability study of the fault and immediate postfault system conditions, and a postfault steady-state load flow simulating system conditions after transients have subsided.

The prefault load flow study, which provided the initial conditions for the transient and the posttransient studies, included a detailed representation of the Edison, Consumers Power, Ontario Hydro, and Toledo Edison systems. Other interconnected systems were represented either to a lesser degree, or by an equivalent of the system.

The transient stability study showed the first 2 sec after the contingency occurs. The contingency considered involves a three-phase fault adjacent to the Fermi 345-kV bus on the Fermi-Brownstown #3 circuit and subsequently, backup protection operates in 12 cycles to isolate the faulty circuit breakers BM and BT at the Fermi station. Simulation of generators of 500 MW or greater capacity, which are electrically close to the Fermi plant, included transient saliency and excitation response.

The postfault load flow portrayed system conditions after transients have subsided and prior to automatic tieline and frequency control actuation to recover the Edison generation loss. During this period, the loss of generation is assumed offset by discrete load and generation changes that result from the drop in system frequency.

The transient stability and postfault load flow studies indicated that both the grids at 345 kV and 120 kV are stable and that Edison and its interconnected systems are capable of supplying the necessary offsite power. This conclusion was reached since there was no evidence of cascading, which could have resulted from either high circuit loadings or depressed network voltages. Steady-state postfault network voltages were at or near prefault conditions, and steady-state postfault network line flows were within emergency ratings. There was no apparent reaction of network protective relaying to transient network line currents and voltages. System transient studies are periodically updated, as system loads and configurations change, to verify that Edison's stability criteria are being met.

8.2.2.2 Outages of Transmission Lines Into Fermi

To demonstrate the reliability of the lines supplying the Fermi site, a historical study of unscheduled line outages on the existing 120-kV system was made. The following outages are an actual record of the outages of the 120-kV lines and buses at the Fermi plant. These interruptions are of the unscheduled variety and were recorded anytime the through current was interrupted. A number of these interruptions were of a momentary nature; that is, the current was automatically restored within seconds.

Unscheduled Outages[a]
Lines, 120 kV into Fermi Plant

Line	Length (Miles)	1968	1969	1970	1971	1972	1973	Interruptions Average/Year
Fermi-Custer[b]	9.5	2	2	2	3	2	1	2.16
Fermi-Luzon[c]	21.5	0	0	0	2	1	2	0.83
Fermi-Brownstown[d]	16.1	2	0	1	4	3	3	1.66

a For additional, more current information on outages, see Table 8.2-1

b Line renamed in 1995 to Fermi-Shoal and Shoal-Custer lines. Length increased to 13.9 miles.

c Line renamed in late 2003 to Fermi-Radka and Radka-Luzon. Length increased to 21.9 miles.

d Line re-named in 1989 to Fermi-Swan Creek and Swan Creek-Brownstown lines and renamed in 1996 to Fermi-Swan Creek, Swan Creek-Berlin and Berlin-Brownstown lines.

Buses, 120 kV at Fermi

Bus	1968	1969	1970	1971	1972	1973	Interruptions Average/Year
101	0	0	0	1	0	0	0.166
102	0	0	0	1	0	1[e]	0.33

e This outage was due to a gas turbine peaking unit cable failure, which directly affects the 120-kV system. These cables have been replaced with extra-insulated cables (25 kV) to increase reliability.

A similar historical analysis of the actual 345-kV system was not possible since the lines are relatively new into Fermi 2. Past outages in this region most often have been the result of lightning strikes; however, outages due to gunshots, train derailments, galloping conductors, equipment failure, and unknown causes have also occurred. The average occurrence rate for thunderstorms is 35 per year. Circuit failures causing outages for 5 minutes or longer have occurred at a frequency of 1.0 per 100 circuit-miles per year. Failures causing outages for less than 5 minutes have occurred at a rate of 4.0 per 100 circuit-miles per year.

To achieve a base for viewing reliability of the 345-kV system, transmission performance data published by ECAR and MAIN reliability regions were used to yield estimated circuit unavailabilities for both the 345-kV and 120-kV transmission systems. This outage rate includes both scheduled and unscheduled outages.

Out-of-plant transmission availability can be measured by circuit outage rates and restoration time following an outage. The data are statistical in nature and are, therefore, subject to the number of circuit miles and geographical area for which historical performance data were available to compile the outage rate. Data for 120-kV circuits should be fairly representative because of the considerable number of circuit miles and years for which operating records are available. The data base available for evaluation of 345-kV circuit outage rates is not extensive, and is, therefore, more subject to change. The outage rate and restoration time data in Table 8.2-2 are for this reason based on a mixture of judgment and operating experience.

The stability studies in Subsection 8.2.2.1 lead to the conclusion that the two systems are electrically independent.

Another area of possible susceptibility to common failure is transmission line crossovers. The two Fermi-Brownstown 345-kV circuits are on separate tower lines. The north circuit out of Fermi is not involved in any crossover. The crossovers that exist are

a. Fermi to Brownstown #3, south 345-kV circuit <u>crosses over</u> the Fermi-Shoal, Fermi-Luzon, Fermi-Swan Creek 120-kV circuits (three 120-kV Fermi circuits) near Fermi power plant at Toll Road and again when 345-kV circuit turns north at Highway I-75 at Mentel Road

b. Monroe to Brownstown 345-kV (2) circuits <u>cross over</u>

   1. Fermi to Brownstown #3 north of Post Road at I-75

   2. Three 120-kV Fermi circuits at I-75.

c. Monroe to Wayne and Monroe to Coventry circuits <u>cross</u> <u>over</u>

   1. Fermi-Shoal 120-kV circuits near I-75

   2. Fermi-Radka 120-kV circuit near War Road.

d. Majestic to Monroe-Allen Junction tap and the Majestic to Lemoyne circuits near Covell Road <u>cross over</u> the Fermi to Radka 120-kV circuit

Based on the above, the most critical failure would be the collapse of the Fermi-Brownstown 345-kV south circuit out of Fermi as it passes over the 120-kV circuits as described in a. above. Although this could cause the loss of all 120-kV circuits, the Fermi-Brownstown 345-kV north circuit out of Fermi would remain in service.

Based on this information, it is concluded that even in the case of a major earthquake, tornado, or similar cataclysmic event, the simultaneous loss of all offsite power transmission is improbable. However, should a complete loss of offsite power occur, the ESF buses will be supplied from the standby emergency diesel generators (EDGs).

8.2.2.3 Switchyard Outages

The primary defense against a total loss of offsite power is the complete independence of the two switchyards. The 345-kV and 120-kV switchyards are physically separated by more than a quarter of a mile and have no electrical interties. Therefore, other than a major natural disaster, such as a tornado or an earthquake of unexpected magnitude, no single event could precipitate the simultaneous loss of both switchyards.

The 345-kV switchyard double breaker-double bus design maximizes circuit, unit, and system service transformer availability by allowing terminal equipment maintenance without a complete shutdown of the associated circuit, unit, or system service transformer. On occurrence of a line fault, the provided protective relay schemes will:

a. Open the affected breaker

b. Initiate the breaker failure scheme.

In case the breaker called on to open fails to function or interrupt the fault within a predetermined time, the breaker failure scheme will:

a. Initiate transfer trip to open the breakers at the remote terminal of the line

b. Open all local breakers necessary to isolate the fault and defective breaker.

With the exception of a breaker failure-scheme operation resulting in tripping of all bus 301 breakers, no 345-kV line fault will cause the interruption of power transformer SS65.

Any defective breaker in the switchyard can be isolated with disconnect switches and power restored. The only failures that could cause a sustained outage of power to transformer SS65 are

a. A fault on bus 301 or associated equipment

b. A fault on either transformer SS65, or its feeder on the secondary side, detected by the transformer phase and neutral overcurrent relays

c. A sudden pressure rise in the transformer oil.

As shown in Figure 8.3-1, the 120-kV switchyard is arranged with two buses tied together by a normally closed circuit breaker. On occurrence of a l20-kV line fault, the provided first-line or backup relay schemes will open the affected breaker to isolate the faulted line without interrupting power to transformer SS64. The only failures that could cause a sustained interruption of power to transformer SS64 are

a. When fed from bus 11 (normal feed)

1. A fault on bus 101 or its associated equipment
2. A failure of transformer 1 and its associated bus 11
3. A failure of transformer 2 and its associated feeder
4. A failure of transformer SS64, its associated feeder cable, or primary breaker
5. A fault on 120-kV bus 102 with a breaker failure of section breaker GH.

b. When fed from transformer CTG-11 (alternate feed)

1. A fault on bus 102 or its associated equipment
2. A failure of transformer CTG-11 and its associated buses
3. A fault on 13.8-kV transformer SS62 and its associated buses (Fermi 1 equipment)
4. A failure of transformer SS64 or its primary breaker
5. A fault on the 120-kV bus 101 with a breaker failure of section breaker GH.

If an event should occur causing loss of power through transformer 1 and bus 11, transformer SS64 can be immediately restored by closing the feed from transformer CTG-11 via bus 1-2B. The controls for these breakers are on panel H11-P809 in the Fermi 2 control room.

8.2.2.4 Conclusions

Since the feeder to transformer SS64 is run in underground bus ducts and the feeder to transformer SS65 is run overhead, it is evident that no single occurrence except a major earthquake would cause the simultaneous loss of the feeders to both transformers.

It is concluded that the offsite power system is in conformance with General Design Criterion 17 of 10 CFR 50, Appendix A, and complies with the applicable sections of IEEE 308-1971 and Regulatory Guide 1.32, except for Parts 1d, 1e, and 2b. These sections required compliance with Regulatory Guides 1.75 and 1.93. For discussions of those guides, see Subsections A.1.75 and A.1.93.

8.2.2.5 Operation With Degraded Grid

8.2.2.5.1 Analysis

Based on the 1991 Edison grid configuration, generation capability, and predicted load, electrical equipment operating requirement limits were identified for Fermi 2 offsite power sources. These limits ensure satisfactory operability of all electrical equipment during all modes of plant operation, and are listed in the Nuclear Plant Operating Agreement (NPOA) for the Fermi 2 Nuclear Power Plant. The NPOA contains the detailed operating requirements for Fermi 2. The NPOA Transmission System Operating Criteria section

contains nominal offsite source voltages, minimum continuous voltage, maximum continuous voltage, minimum frequency and maximum frequency.

These figures are based on results of load flow and stability analyses that calculated the grid response to contingencies designed to be the worst possible and to limitations for operating requirements of Fermi 2 auxiliaries and safety-related equipment.

At the conditions defined above, the voltage limits during continuous operation were calculated for all safety-related buses.

At the voltages specified, all safety-related loads are capable of performing their safety functions. Further load flow and stability analyses were run for a simulated loss of Fermi 2 or a loss of the largest grid load while operating at the limits identified previously.

The Ludington pumped storage plant constitutes the largest single grid load that could be lost at once. Based on the analysis for either situation, the following conclusions were evident:

a. Grid system stability is maintained

b. System frequency fluctuations that occur are insignificant

c. Voltage fluctuations are short lived and, allowing for normal grid voltage operating adjustment, do not exceed the limits previously stated.

No grid operating restrictions for spinning reserve, either real or reactive, within a designated distance from the plant site are required to maintain the offsite power sources within the limits specified.

In the course of the various voltage analyses, all previous transformer tap settings were verified. For the loads fed from the 120-kV system, the voltage regulation setpoint for the +20, -10 percent load tap changer of SS64 transformer was determined. Voltage regulation setpoints were also verified for the 480-V bus ±10 percent induction regulators fed from the 345-kV system via transformer SS65. Operational setpoints were chosen to optimize voltage levels for all modes of plant operation and to ensure that all electrical equipment can function as required when called on.

8.2.2.5.2 Identification of Degraded Grid Condition

Each of the Fermi 2 offsite sources is monitored by indicating voltmeters. In addition to the offsite source voltmeters, a low voltage alarm sensor and an indicating voltmeter are provided for monitoring the Division I 4160-V buses 64B, 64C, 11EA, and 12EB, since they are all at a common bus voltage. Another indicating voltmeter and a low voltage alarm sensor are provided for monitoring the Division II buses 65E, 65F, 13EC, and 14ED. In both cases, the low voltage alarm sensor will initiate alarms in the control room through the annunciator if the voltage on the buses drops below normal. The alarms will actuate at approximately 4.08 kV for the 120-kV source and 4.09 kV for the 345-kV source. These alarms would consist of both audio and visual indication to attract operator attention.

Supplementing the indicating voltmeters are recording voltmeters for each of the reactor building safety-related 4160-V buses. These could be used also to evaluate voltage at the

corresponding bus in the residual heat removal complex since the voltage is essentially the same.

Safety-related 480-V buses use one indicating voltmeter per division. The voltmeter may be switched to read the desired bus voltage. Similarly, one 480-V bus within a division may be placed on a recording voltmeter as required. Since continued plant operation is directly dependent on the offsite source voltage, only those voltages would be alarmed.

8.2.2.5.3 Response To Degraded Grid Condition

Under certain unlikely operating conditions, the 120-kV bus voltage could drop below the limit specified in Subsection 8.2.2.5.1. For both the 345-kV and the 120-kV systems, two methods exist to maintain the proper voltage at the safety-related buses.

On receipt of the ESF bus voltage alarm but before the voltage has fallen below the minimum specified in Subsection 8.2.2.5.1, the plant operator, in conjunction with the System Supervisor, will take corrective action to prevent the grid voltage from decaying further. These actions may include, but are not limited to, initiation of the offsite peaking units or offsite switching.

Should the voltage continue to decay, undervoltage relays offer further protection. Two levels of undervoltage protection exist at the 4160-V safety-related buses. The primary undervoltage relays detect complete loss of offsite power and will be set below the allowable motor-starting transient with a brief time delay. The second level of undervoltage protection will prevent the voltage at the safety-related buses from slipping below the minimums defined in Subsection 8.2.2.5.1. A moderate time delay provides immunity to grid and starting transients. A more conservative, time delay duration is applied for a degraded grid condition concurrent with a LOCA. Specific features of the second level of undervoltage protection are described below:

a. The undervoltage relays are set in accordance with design calculations to preclude damage to Class 1E equipment. A time-delay setting was chosen to avoid the operation of the relay for motor-starting conditions. The relays are qualified to Class 1E requirements and located in, and connected to, the Class 1E switchgear and fed from bus potential transformers that are also qualified to Class 1E requirements

b. Alarm relaying has been provided to alert the operators that a low-voltage condition exists. The setpoint of the alarm relay is above that of the degraded grid trip setting. This was done to give the operators advanced indication of system degradation. It also eliminates any possibility that setpoint drift would permit the trip function to be actuated ahead of an alarm. It does not in any way affect the time delay of the degraded grid relaying

c. The time delay for the actuation of the degraded grid undervoltage relay has been selected to be as short as possible, without encountering spurious trips from motor starting

d. A second, shorter time delay exists for the actuation of the degraded grid undervoltage relay with a concurrent LOCA. This second time delay was established to support Branch Technical Position (BTP) PSB1 Position B.1.b.1

e. The degraded grid voltage protection system at Fermi 2 meets all applicable requirements of IEEE Standard 279-1971, "Criteria for Protection Systems for Nuclear Power Generating Stations," as outlined in Branch Technical Position (BTP) PSB1

f. If offsite power is lost, the emergency diesel generators would start, and, when synchronous speed is achieved, the automatic sequencer would begin to add loads as required. If a safety injection actuation signal is received, the sequencer would automatically shed all loads from the emergency diesel generators. The sequencer would then begin adding ESF equipment as needed to mitigate the consequences of the accident. The degraded grid relaying is not designed to operate during sequencer operation. The diesel generator bus load-shedding feature is automatically bypassed once the diesel generator is supplying power to the bus. This is required so that the voltage drops encountered during load sequencing on the diesel generators will not interact with the load-shedding feature and negate the load sequencing

g. The Class 1E buses have been analyzed for all anticipated operating situations. Section 8.3 provides a description of the Class 1E distribution system

h. Measurements have been made during the preoperational test program to verify the Class 1E bus analysis techniques.

An independent scheme is provided for each division of emergency power. Within a division, both types of undervoltage relays can automatically trip the offsite feeder breaker and initiate load shedding. Upon start of the EDG and the subsequent EDG breaker closure, the diesels would be loaded by the automatic load sequencer.

Limiting conditions for operation, surveillance requirements, and trip setpoints are included in the Technical Specifications.

8.2.2.5.4 Periodic Verification of Grid Adequacy

To ensure that grid configuration changes do not adversely affect the present analyses, Edison constantly reviews the transmission grid system stability and voltage levels. On a yearly basis, an official company 5-year load and generation forecast is made. Based on these forecasts, base grid systems for a 5-year period are established. These base grid systems are tested via computer simulations to meet voltage and stability criteria. From the results of these tests, any grid configuration modification or operating restrictions required to maintain required grid operation are initiated. Verification of voltmeter accuracy and alarm setpoints for the low voltage alarm sensor will be made periodically, either at unit shutdown or at least once every 3 years.

In addition, during preoperational testing, the plant auxiliary system response was determined from actual measurements and these results were compared to the computer-simulated results to confirm the adequacy of the computer program.

In June 1986, degraded grid voltage adequacy was reverified by design calculations. As a result of this analysis, the Division I settings were increased and the Technical Specifications revised.

TABLE 8.2-1 SUPPLEMENTAL INFORMATION ON UNSCHEDULED OUTAGES

Bus	Length (miles)	Year 1978	1979	1980	1981	1982	Interruptions (average/yr)
120-kV lines:							
Brownstown-Berlin Berlin-Swan Creek Swan Creek-Fermi[c]	16.10	1-Lightning	-0-	1-Lightning 1-Wind	2-Lightning 1-Unknown	2-Unknown	1.60
Custer-Shoal Shoal-Fermi[d]	9.5	-0-	-0-	-0-	-0-	-0-	-0-
Fermi-Radka (includes Seville Tap)[b] Radka-Luzon[e]	24.05	3-Wind	2-Wind	-0-	-0-	-0-	1.00
Kentucky-Luzon[b]	7.54	-0-	-0-	1-Lightning	-0-	1-Equipment breakdown 113 min. out (TRF 1-Kentucky)	0.40
Kentucky-Pioneer[b]	16.74	-0-	-0-	2-Wind	1-Lightning	-0-	0.60
Pioneer-Superior[b]	6.93	-0-	-0-	-0-	-0-	1-Contamination	0.20
345-kV lines:							
Brownstown-Fermi 2 (in 9/16/82)	15.43	--	--	--	--	-0-	--
Brownstown-Fermi 3 (in 10/18/82)	16.18	--	--	--	--	-0-	--
120 kV:							
101 (120 kV)	--	-0-	-0-	-0-	-0-	-0-	-0-
102 (120 kV)	--	-0-	-0-	1-Equipment failure 148 minutes	-0-	-0-	0.20
Fermi 2:							
301 (345 kV)	--	--	--	--	--	-0-	--
302 (345 kV)	--	--	--	--	--	-0-	--

[a] All momentary interruptions on lines unless otherwise indicated.

[b] These four lines are in series (one on one), and an interruption of any one of them would remove the Radka source to Fermi.

[c] Fermi-Brownstown line revised to Brownstown-Swan Creek and Swan Creek-Fermi lines in 1989 and revised to Brownstown-Berlin, Berlin-Swan Creek and Swan Creek-Fermi lines in 1996.

[d] Custer-Fermi line revised to Custer-Shoal and Shoal-Fermi lines in 1995. Length increased to 13.9 miles.

[e] Fermi-Luzon line revised to Fermi-Radka-Luzon in late 2003. Length increased to 24.69 miles.

TABLE 8.2-2 TRANSMISSION CIRCUIT OUTAGE RATES AND RESTORATION TIMES

Designation	Circuit Length (miles)	Average Circuit Outage Rate (outages per circuit per year)	Average Outage Duration (hr per outage)	Circuit Unavailability (year/year)
		345-kV Transmission		
Fermi-Brownstown 2	15.4	5.8[a]	12	7.9×10^{-3}
Fermi-Brownstown 3	16.2	5.9[a]	12	8.1×10^{-3}
		120-kV Transmission		
Fermi-Swan Creek Swan Creek-Berlin Berlin-Brownstown	16.3	3.6[b]	12	4.9×10^{-3}
Fermi-Shoal Shoal-Custer	13.9	3.5[b]	12	4.8×10^{-3}
Fermi-Radka Radka-Luzon	21.9	3.7[b]	12	5.1×10^{-3}

[a] Based on MAIN and ECAR data, there can be 5.6 scheduled outages per line (circuit) per year plus 1.6 forced outages per 100 circuit miles per year.

[b] 3.2 scheduled outages per line (circuit) per year plus 2.2 forced outages per 100 circuit miles per year.

Note: The above forced outage rates do not include momentary interruptions where the circuit is automatically restored within seconds.

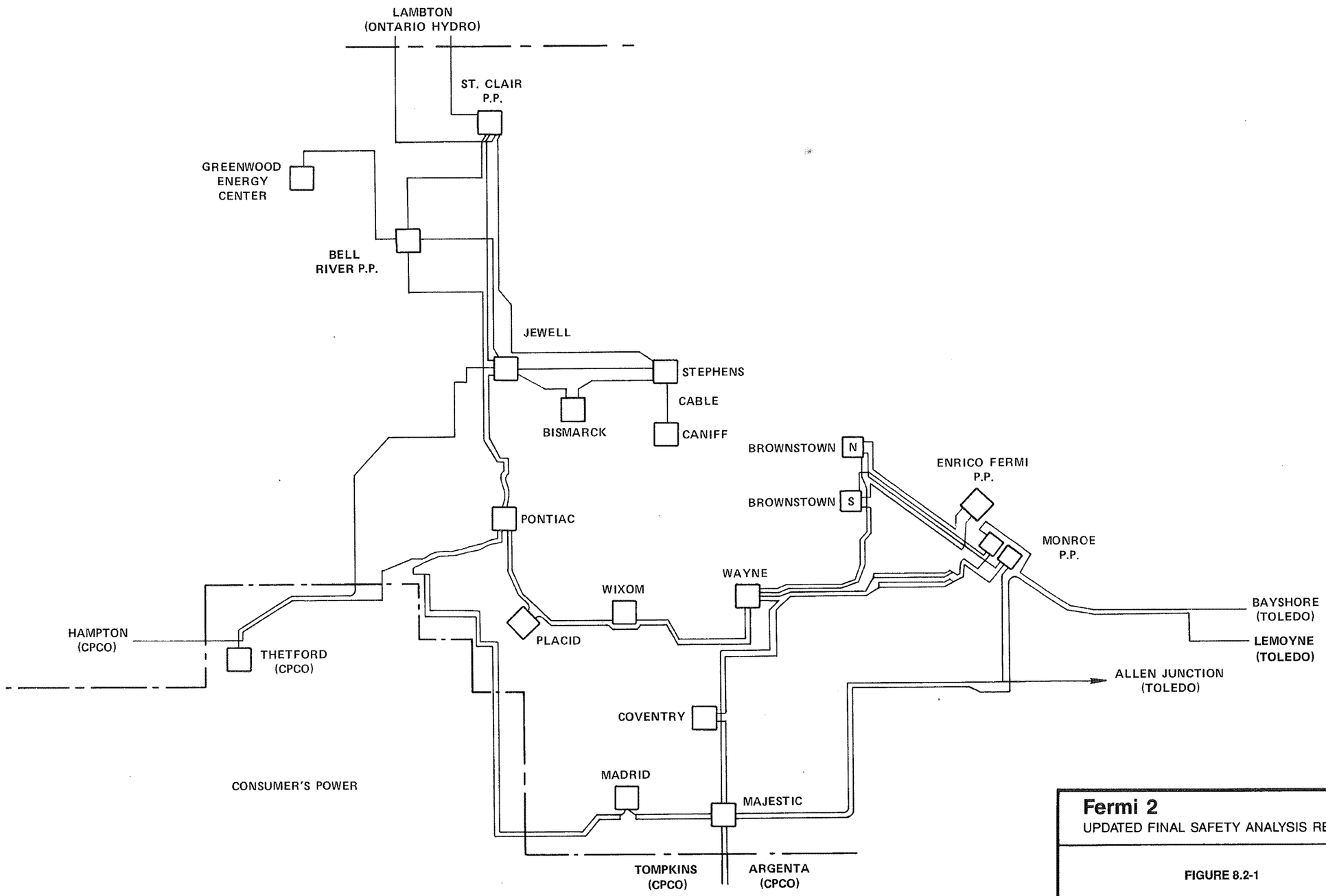

Fermi 2
UPDATED FINAL SAFETY ANALYSIS REPORT

FIGURE 8.2-1

345-KV TRANSMISSION LINES IN 1988

REV 3 3/90

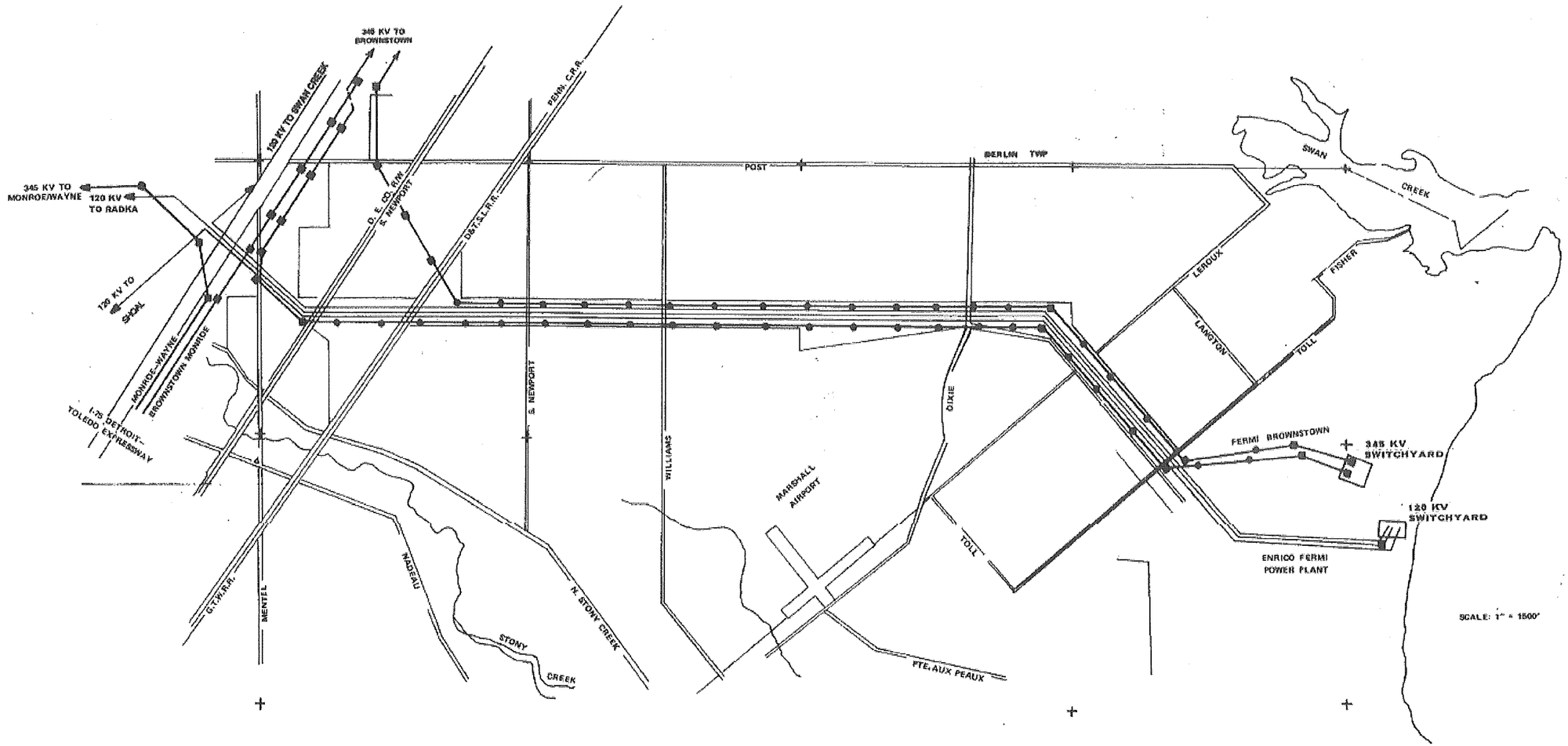

NOTE: The 120-kV and 345-kV transmission lines leave the plant in a common right of way for approximately 5 miles before diverging into different rights of way to the final termination at individiual stations,

Fermi 2

UPDATED FINAL SAFETY ANALYSIS REPORT

FIGURE 8.2-2

FERMI TRANSMISSION CORRIDOR
PLAN VIEW

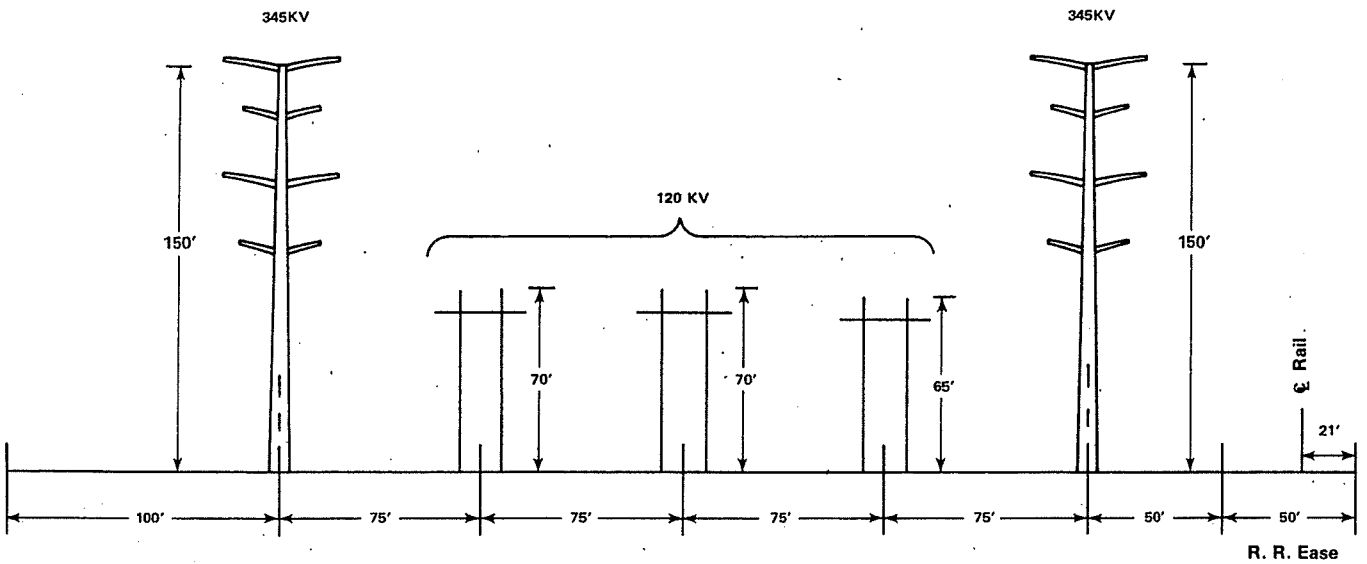

Note: This illustration shall be considered typical tower arrangement.
Tower construction is determined by ITC Holdings (Section 8.2.1.1)

Fermi 2
UPDATED FINAL SAFETY ANALYSIS REPORT

FIGURE 8.2-3

FERMI TRANSMISSION CORRIDOR
SECTIONAL VIEW

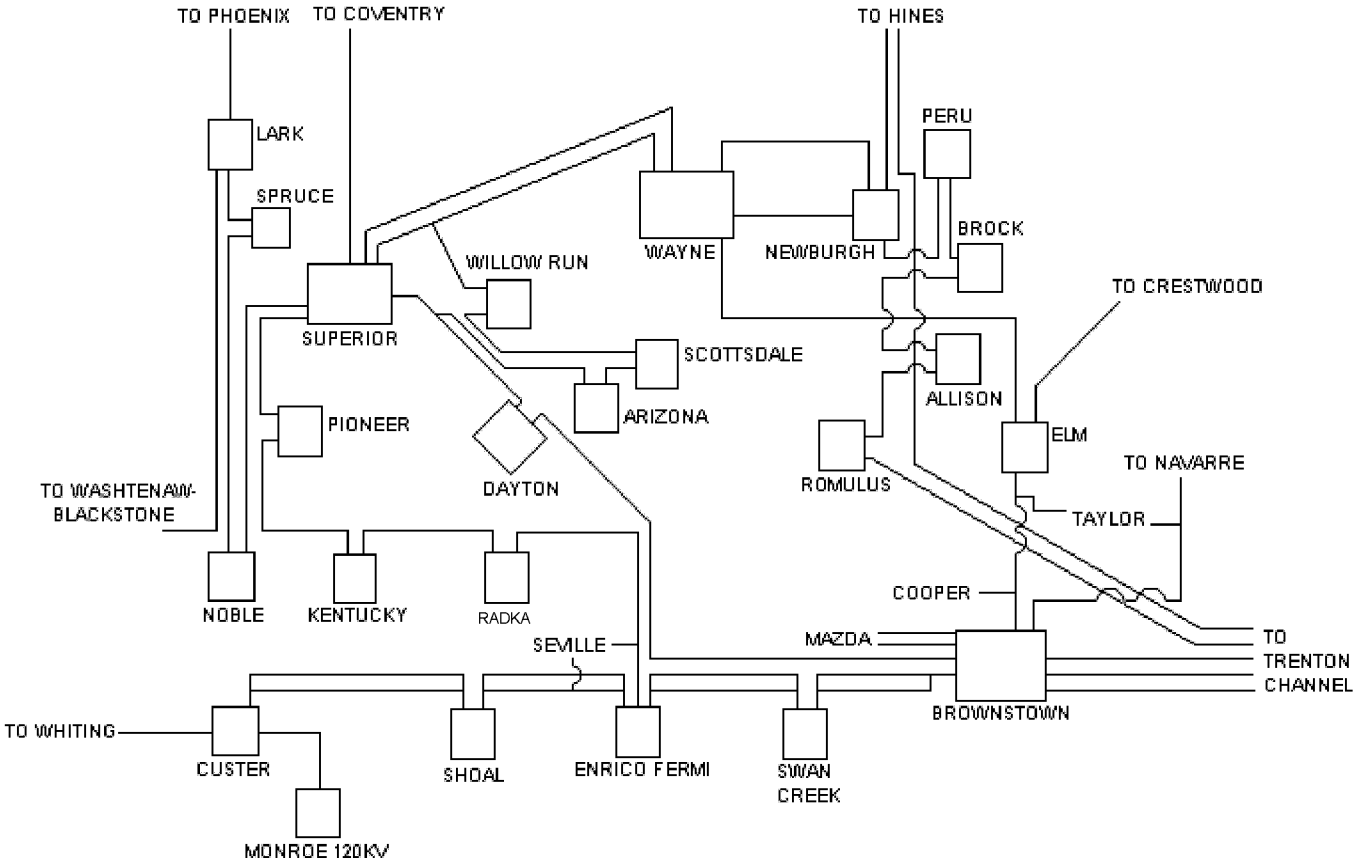

Fermi 2

UPDATED FINAL SAFETY ANALYSIS REPORT

FIGURE 8.2-4

120-KV TRANSMISSION LINES

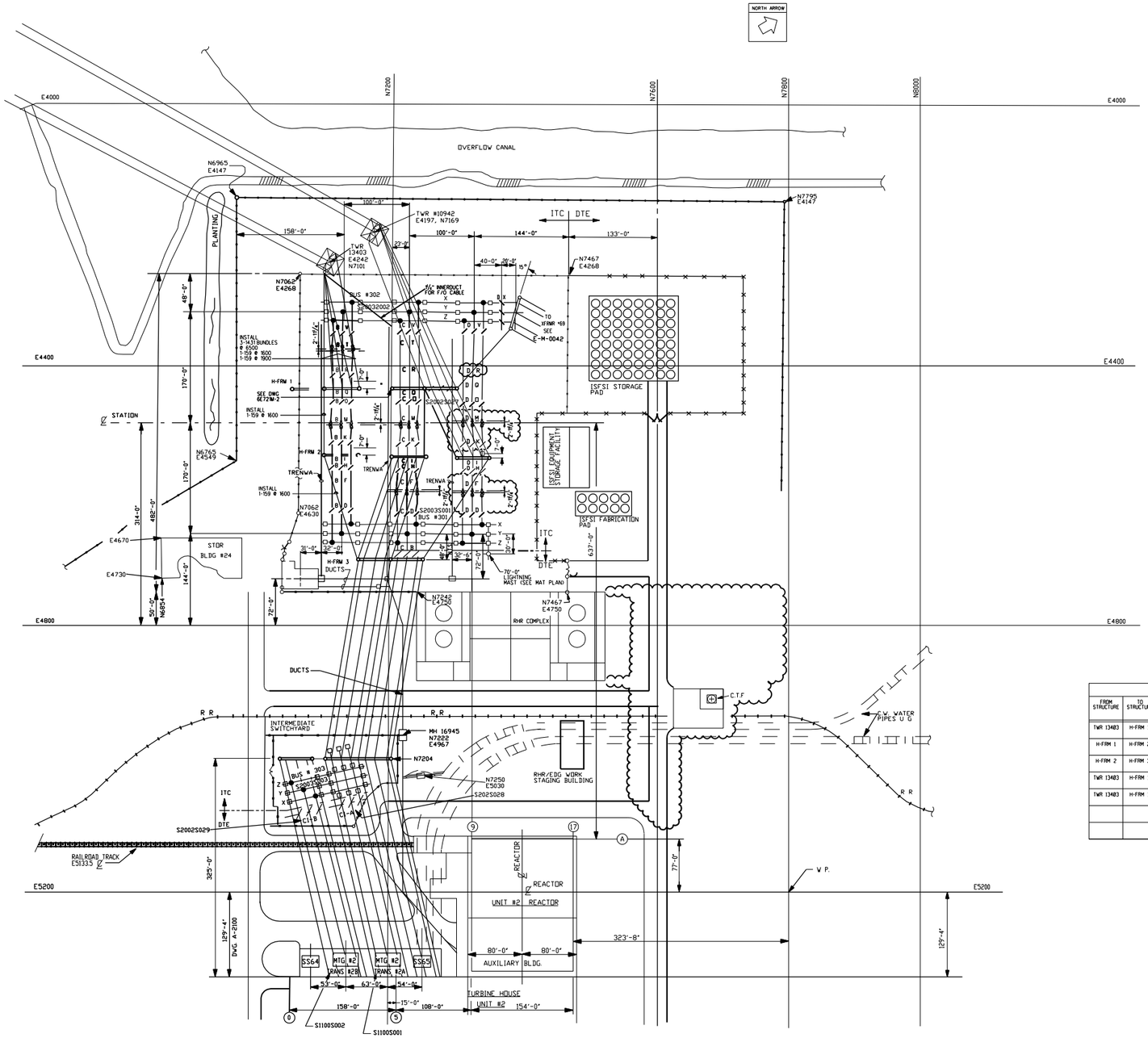

REFERENCE DRAWINGS	
SD-M-0001	ONE LINE DIAGRAM
SD-M-0002	HOUSE SERVICE DEA - PAD INTO TRANS FEEDS 345KV YARD
SD-M-0003	HOUSE SERVICE DIAGRAM - RELAY HOUSE
SD-M-0004	HOUSE SERVICE DIAGRAM - 345KV MAT
SD-M-0005	DC DIAGRAM
E-M-0001	ELECTRICAL KEY PLAN
E-M-0002	MAT, CONTROL TRENCH & DUCT PLAN
E-M-0003	RELAY HOUSE-CONTROL DUCTS & CABLE PITS PLAN & SECTIONS
E-M-0003-01	CONTROL DUCT SECTIONS & MANHOLE DETAILS
E-M-0004	GROUNDING PLAN 345KV MAT UNIT #2 (LOWER)
E-M-0004-02	GROUNDING PLAN 345KV MAT UNIT #2 (UPPER)
E-M-0005	INSTALLATION OF EQUIPMENT - PLAN
E-M-0006	INSTALLATION OF EQUIPMENT - SECTIONS BUSES 301 & 302
E-M-0006-01	INSTALLATION OF EQUIPMENT - SECTIONS ROWS B,C, & D
E-M-0007	RELAY HOUSE EQUIPMENT INSTALLATION - PLAN
E-M-0008	RELAY HOUSE EQUIPMENT INSTALLATION - SECTIONS
E-M-0009	INSTALLATION MTG#2 TRANS 2A & 2B PARALLELING
E-M-0010	FRONT VIEW SWITCHBOARD ASSM
E-M-0012	PLAN VIEW - CABLE ROUTING - RELAY HOUSE
E-M-0013	LIGHTING - RELAY HOUSE
SD-M-0062	ANNUNCIATOR WINDOW ARRANGEMENT
E-2980-03	INSTALLATION - UNDER GROUND DUCT UNIT #2
E-M-2008	MATS AND PIERS - INTERMEDIATE SWITCHYARD
E-M-0040	EQUIP SECTIONS - INTERMEDIATE SWITCHYARD

SAG CHART

345KV YARD TO TURBINE HSE

TEMP	INITIAL SAG 15/90	INITIAL SAG 2/5000		INITIAL SAG 15/90	INITIAL SAG 2/5000
0° F	21.20'	13.95'	70° F	22.05'	
10° F	21.32'		80° F	22.17'	
20° F	21.45'		90° F	22.29'	15.50'
30° F	21.57'	14.49'	100° F	22.40'	
40° F	21.69'		110° F	22.52'	
50° F	21.81'		120° F	22.64'	15.98'
60° F	21.93'	15.00'			

SAG CHART

FROM STRUCTURE	TO STRUCTURE	COND. SIZE	SPAN (FT)	60 DEG TEN (LBS)	HLT TENSION (LBS)	0 DEG F SAG (FT) / TEN (LBS)	30 DEG F SAG (FT) / TEN (LBS)	60 DEG F SAG (FT) / TEN (LBS)	90 DEG F SAG (FT) / TEN (LBS)	120 DEG F SAG (FT) / TEN (LBS)	REMARKS
TWR 13403	H-FRM 1	159 ACSR (GUINEA)	180	257	1600	5.7 / 283	6.0 / 269	6.3 / 257	6.5 / 248	6.7 / 241	
H-FRM 1	H-FRM 2	159 ACSR (GUINEA)	110	257	1600	2.1 / 283	2.2 / 269	2.3 / 257	2.4 / 248	2.5 / 241	
H-FRM 2	H-FRM 3	159 ACSR (GUINEA)	170	257	1600	5.1 / 283	5.3 / 269	5.6 / 257	5.8 / 248	6.0 / 241	
TWR 13403	H-FRM 1	1431 ACSR (BOBOLINK)	180	2096	6500	5.5 / 2366	5.9 / 2216	6.2 / 2096	6.6 / 1992	6.9 / 1900	TENSION PER PHASE
TWR 13403	H-FRM 1	159 ACSR (GUINEA)	210	310	1900	6.5 / 338	6.8 / 323	7.1 / 310	7.3 / 299	7.5 / 291	

ITC DRAWING NO. 6E721M 0001, REV. S (WITH POSTING)

DETROIT EDISON COMPANY DRAWING NO. E4-557

Fermi 2

UPDATED FINAL SAFETY ANALYSIS REPORT

FIGURE 8.2-5

345KV SWITCHYARD PLAN

8.3 ONSITE POWER SYSTEMS

8.3.1 AC Power Systems

8.3.1.1 Description

Figure 8.3-1 shows the auxiliary ac power systems for Fermi 2. The offsite or preferred power for the ac power systems is supplied from the 120-kV and 345-kV transmission system through stepdown transformers. Alternate power for the engineered safety feature (ESF) systems is available through tie breakers that can tie the ESF bus to the opposite system transformer, for maintenance only. The main and tie breakers are interlocked in such a way that in no case can the two offsite power sources be tied together. Transfer to and from a maintenance tie source without interruption is possible, but the emergency diesel generator (EDG) of that particular bus must be used to make the transfer. This is accomplished by paralleling the EDG with the source, removing the source, paralleling with the alternate source, and then securing the EDG. Standby or onsite power originates at the EDGs housed in a physically separate Category I structure near the reactor building, known as the residual heat removal (RHR) complex.

Also available is CTG 11-1 or an alternate CTG 11-2, 11-3, or 11-4 which can be aligned to the 120-kV switchyard to act as the alternate ac source for a Station Blackout event and as a power source for the Dedicated Shutdown Panel.

The ac auxiliary power system as used in the plant has the following voltage levels:

a. 4160 V for loads above approximately 300 KVA

b. 480/277 V for loads below approximately 300 KVA.

8.3.1.1.1 Power Supply Feeders

Power supply feeders are of proven electrical, physical, and thermal qualities. They are sized to carry the load currents, with conductor temperatures remaining within the limits established by IPCEA and IEEE to obtain full expected cable life. The feeders are connected to their respective buses through air circuit breakers which are specified and constructed according to the applicable standards of ANSI, NEMA, and IEEE. These 4160-V circuit breakers are capable of an interruption capacity of 350 MVA. The 480-V breakers are of the following ratings:

	Symmetrical Interrupting Rating	
Breaker Type	Instantaneous amps	Delay amps
K600S	30,000	30,000
K1600S	50,000	50,000
K3000S	65,000	65,000

The calculated phase short circuit current for all feeders is always below the interrupting capacity of the breakers.

The preferred power for Division II is supplied from the system service transformer SS65 to the 4.16-kV buses through a nonsegregated cable bus system. A separate feeder bus section services each of the two 4.16-kV windings of transformer SS65. One feeder bus services switchgear bus 65G, which feeds only the two reactor recirculation pump motor-generator set drives. The other feeder bus is routed independently to Division II ESF buses 65F and 65E in the reactor building and balance-of-plant (BOP) buses 65D and 65W in the radwaste building, as shown in Figure 8.3-1.

Preferred power for Division I ESF buses is supplied from transformer SS64, through a feeder bus consisting in part of underground cable and ducts and nonsegregated cable bus coming off the 4.16-kV winding. In addition to Division I ESF buses 64B and 64C in the reactor building, BOP bus 64A and 64V in the radwaste building is also served by this feed.

A third feeder bus serves BOP loads in the circulating water pump house from transformer SS66. A fourth feeder bus supplies loads located in the general service water pump house, and is fed from transformer SS68.

A fifth feeder from the 345-kV transmission system via transformer SS69 provides an alternate feed to the BOP loads in the general service water pump house and the circulating water pump house. Transformer SS69 is fed from 345-kV bus 302. The feeds to the circulating water pump house BOP loads are split between transformers SS66 and SS69, with manual transfer of the feeds to the buses from the main control room. The feed to the general service water pump house BOP loads are split between transformers SS68 and SS69, with manual transfer of the feeds to the buses from the main control room (refer to Figure 8.3-1).

Bus feeders to and from the system service transformers are not classified Class 1E as defined by IEEE 308-1971. However, those feeder buses that service Class 1E switchgear buses are separate and independent of each other, so that any failure on one bus cannot affect the other.

The four feeders from the four EDG buses are contained in Class 1E underground concrete ducts. This onsite power supply is used as the standby supply to the ESF system buses in the event of the loss of offsite power.

8.3.1.1.2 Busing Arrangements

Switchgear buses are arranged and located to maintain electrical and physical independence between divisions of the safety systems. Separate switchgear rooms ensure the physical independence of safety divisions.

The two redundant ESF divisions include four 4.16-kV buses each. Two buses of each division are located in the RHR complex, and two are located in the auxiliary building (Figures 8.3-2 through 8.3-6). These buses service all 4.l6-kV safety loads, as well as provide a power bus source for lower voltage subdivisions at 480-V ac (Figures 8.3-5 and 8.3-6) and l20-V ac for ESF equipment (Figure 8.3-7). Except as noted below, the two divisions have no interconnections.

Within a division, ac loads are divided into two groups, each supplied by the common system service transformer. A diesel generator is assigned to power each group, when required. The EDGs are connected to a dedicated bus in the RHR complex rather than directly to the ESF buses in the reactor building, so that the cabling is minimized. The ESF bus located in the

RHR complex, the cable between the equivalent 4160-V ac bus in the reactor building, and the feeder breaker are included in a total differential protection scheme, avoiding the problems associated with the use of an overcurrent scheme on a feeder where full load currents are different when the feed direction reverses.

Several BOP loads in the reactor building are serviced by the safety buses. In case of a loss of offsite power, a load- shedding scheme initiates tripping of all breakers on 4160 V and 480 V, except 4160/480-V transformers and ESF-motor control center feeders. After the onsite power source (EDG) reaches normal voltage and frequency, sequential loading follows, in compliance with IEEE 308-1971. Once the diesel generator is supplying power to the bus, the bus load-shedding feature is automatically bypassed.

Figure 8.3-1 shows the overall bus arrangement. A functional logic diagram (Figure 8.3-8) describes the various conditions of operation. A description of the operation of the system is given in Subsection 8.3.1.1.14.

8.3.1.1.3 Loads Supplied From Engineered Safety Feature Buses

Loads supplied from ESF buses of each division are comprised of that equipment pertinent to the division and selected BOP loads. The one-line diagram of the ESF buses is shown in Figures 8.3-1 through 8.3-6. A tabulation of the overall ESF loads by system is listed in Table 8.3-2.

Motors are sized so that they have adequate torque to start with the pump discharge open, accelerate within the time allowed by the plant design, and run with maximum pump load. Torque calculations include voltage dips of the motor's rated terminal voltage.

When running at rated speed and maximum load, the motors have adequate torque to prevent stalling during voltage dips caused by starting other large motors on the same power source.

In general, the motor horsepower rating determines the voltage and the source of the motor feed as follows.

a. 1/2 to 49 hp at 480 V, from a 480-V motor control center (MCC)

b. 50 to 249 hp at 480 V, from 480-V bus switchgear

c. 250 and larger hp at 4160 V, from 4160-V bus switchgear.

Voltage regulation for the buses and equipment fed from the 120-kV system is provided by the +20, -10 percent load tap-changing facilities on the secondary windings of transformers SS64, SS66, and SS68.

Voltage regulation is provided for the 480-V buses fed from the 345-kV system through transformer SS65, because transformer SS65 has a fixed ratio and the 345-kV system voltage can vary up to 5 percent. Voltage regulation is provided for the BOP buses at bus 65L at 4160 V. Bus 65L voltage is regulated by a $\pm$5 percent, oil-filled, 300-kVA regulator. The 480-V ESF buses (buses 72 EC, ED, E, and F) are regulated by 480-V $\pm$5 percent dry-type induction regulators that are part of the 480-V switchgear-unit substations.

8.3.1.1.4 Engineered Safety Feature Bus Interconnections

A manual bus tie connects the Division I buses to the alternate division transformer SS65, and a manual tie connects the Division II buses to the alternate division transformer SS64. The tie is made through two breakers, one at each end of the bus tie with both breakers normally open and racked out.

If power were not available to an ESF bus through its normal offsite source or through its emergency onsite source, it could be manually energized through the alternate offsite power source, for maintenance use only. The affected breakers are interlocked so that the two divisional transformers SS64 and SS65 cannot be operated in parallel on a common load. Nevertheless, this tie can be used as an alternate source for either one of the ESF buses through manual operation.

There is one area where loads can be powered from either redundant system by automatic throwover. This area involves MCC 72 CF, serving certain RHR valves, operation of which is necessary to the operation of the RHR system in the postaccident core cooling mode. This MCC has feeds from both divisions. Division I is the normal feed with an automatic throwover to the Division II feeder. Each feeder has a breaker and contactor at the source and a contactor at the MCC.

According to Regulatory Guide 1.6, Paragraph 4.C, no automatic load transfers are to be performed between redundant divisions. However, in the AEC Safety Analysis of Brunswick FSAR, Section 8.3, Docket No. 50-324, a throwover for certain RHR-related loads was accepted.

However, due to the special nature of the above auto transfer, all feeds to and from the MCC are run in conduit to maintain divisional integrity. This automatic throwover is provided with positive interlocks, breakers, and series contactors to satisfy the "no single failure" criterion.

Division I 480-V breaker 72C-3C is the normally closed feeder breaker. Division II 480-V breaker 72F-5C is the normally open standby breaker. The contactors will either close or open automatically as a result of the operated status of the associated breaker. This solution provides an open break on both ends of the standby feeder to prevent having both sides or contacts of the standby circuit breaker energized from the two redundant divisions.

The 120-V ac control buses and instrument buses have no direct ties between redundant safety divisions. The buses of each division are energized through three 480/120/120-V ac, single- phase transformers with an automatic throwover switch between the 480-V buses of the same division (Figure 8.3-7).

Engineered safety feature inductive loads such as relays and solenoids are connected to the "inductive load" buses, and signal devices such as transmitters and electronic systems are connected to the "instrument" buses.

8.3.1.1.5 Redundant Bus Separation

The 4160-V switchgear, 480-V switchgear, MCCs, and other load centers of one safety system are physically and electrically separated from the load centers of the other safety system. Separate and independent switchgear rooms are provided for each division. The

Division I switchgear is located generally to the south of the reactor centerline on the second floor, and the Division II switchgear is located in the same location on the third floor. Battery rooms are located on the third floor and separated by a 12-in. concrete wall.

The MCCs, distribution panels, and other load centers, except as described previously, are not necessarily located in a specific room. They are separated from similar safety equipment of the opposite division by a horizontal distance of 20 ft or more. If this distance cannot be achieved, a 6-in.-thick reinforced- concrete wall is placed between the redundant buses.

8.3.1.1.6 Equipment Capacities

The ac power system has its related equipment provided with adequate capacity to meet its intended function under all design conditions. All Class 1E 4.l6-kV switchgear is rated at 350 MVA to ensure proper operation and circuit interruption under the most adverse fault current conditions. Auxiliary load transformers and EDGs have been sized for the worst-case conditions of auxiliary or shutdown loading. Cables are properly sized in accordance with the latest IPCEA requirements.

8.3.1.1.7 Automatic Loading and Load Shedding of Buses

Should a loss of offsite power occur on any ESF bus, this bus is stripped of loads by a double load-shedding scheme, as indicated on the functional logic diagram (Figure 8.3-8). Automatic load shedding of the buses begins and the associated EDG receives a start signal and accelerates to rated voltage and frequency. The EDG breaker closes and loads are sequenced on. These loads are specified in Table 8.3-3. Conditions imposed after an automatic loading interval may warrant further manual loading for an extended shutdown. These loads are shown in Table 8.3-4.

A LOCA without loss of offsite power will start the diesels without closing the EDG breaker. The EDGs will idle and remain in standby until manually stopped.

Although there are no mechanical limitations on running the diesel generator at full-speed no-load conditions, running in an unloaded condition can result in an accumulation of unburned oil residue in the engine exhaust system. If load is suddenly applied, it could result in a "stack fire." Therefore, the manufacturer has recommended that the engine be loaded with 50 to 75 percent of rated continuous load for 1 hr after any 8-hr period of unloaded operation.

If diesels are operating in an unloaded condition, normal operating procedures ensure that the engine is loaded after extended periods of no-load operation. In the event of an emergency start from a LOCA without a loss of offsite power, such a procedure would be used for running the diesels. Because there are four diesels, the first diesel would be loaded after four (4) hours and run for an hour, after which the next diesel would be loaded. This method would be applicable during initial recovery. A keylock switch to defeat the LOCA start signal is provided to permit the diesels to be shutdown and placed in standby for a possible long term recovery period without a loss of offsite power.

After a postulated design-basis LOCA, the water level is maintained at two-thirds core height by the core spray pumps. This level is below Level 1, or the LOCA initiating level. Also, containment pressure could remain above the LOCA initiating signal level for extended

periods until the temperature is reduced. Thus, either LOCA signal could be present for weeks after an accident. With the keylock switch and administrative control, the EDG would still be operable for automatic startup on an undervoltage signal, but an extended period of light-load operation would be avoided.

Should the LOCA occur with or during a loss of offsite power, the buses are first stripped of all loads, except for selected feeds for motor-operated valves, and isolated from the offsite power sources before the loading time sequence begins (Table 8.3-5). Loads that are automatically initiated appear in Table 8.3-3. Conditions imposed after an automatic loading interval may warrant further manual loading for an extended shutdown. These loads are listed in Table 8.3-4. The EDG automatic load sequencing system consists, with the exception of the input and output electromechanical relays, of solid-state components. These automatically initiate the closing of selected circuit breakers or contactors in MCCs.

The automatic load sequencing system consists of two redundant, physically separated, and electrically isolated subsystems, one for each of the two divisions.

Each subsystem functions independently and is associated with the sensors and safety equipment of a particular division. Each EDG has its own automatic load sequencing equipment to load the generator in its own independent time interval. Contained in the control cabinet are an input signal conditioning module, initiation logic, a system clock, counter-decoder and delay logic, output drive, and relay modules.

Devices to provide reset control and test capability and indicators to monitor the system status are provided.

The logic and operating components in this system are manufactured using industrial and military-approved quality materials, discrete components (resistors and capacitors), solid-state semiconductors, and integrated circuits. The equipment is rated Class 1E. Printed circuit (PC) cards are flame retardant and are also keyed to prevent insertion of an incorrect card in the PC card file. Digital integrated circuits used on the PC cards are high-threshold logic.

The automatic load sequencing equipment system is designed to function continuously at ambient temperatures and under humidity conditions much more severe than can be expected in the Fermi 2 control area.

On receiving a signal indicating an emergency situation, the system will commence operation. It will delay output for a preselected time period to permit the shedding of the affected bus load and, if required, for the EDG to start and the EDG breaker to close.

After this delay, the automatic load sequencing equipment will generate an output, in the predetermined time and sequence, to initiate bus loading as per Table 8.3-5.

The automatic load sequencing equipment is periodically tested to ensure availability and correct functioning of this system.

8.3.1.1.8 Standby AC Power System

8.3.1.1.8.1 Description

The standby ac power system for Fermi 2 consists of four diesel- generator units. These units are Colt Industries, Fairbanks-Morse, 38TD8-1/8, 12-cylinder, opposed piston, 3967-hp, 900-rpm diesels, each driving a 4160-V ac, 3250-kW salient pole generator, using a solid-state excitation system and fast-response electrohydraulic governors. The total unit is rated at 2850 kW continuous. The basic unit has a long history of successful use in commercial and marine application and as a standby power source for nuclear power plants. At the time it was purchased it was the largest unit with proven reliability available for this service. Of the units for which bids were received, the model selected showed the best performance in starting the 2000-hp RHR pumps required for postaccident service at Fermi 2.

Each EDG is started automatically on loss of voltage to its respective bus, on low reactor water level, or on high drywell pressure.

The units are capable of being started or stopped (for non-emergency starts) manually from local control stations near the engines as well as from the main control room. For testing purposes, units are started manually, brought to speed, synchronized to the power plant system, and loaded. Normally, voltage is regulated automatically with capability to adjust the set point both locally and in the main control room. Manual speed control is also provided locally and in the main control room. Each unit is capable of operating in parallel with the power plant electrical system.

If offsite power is lost during parallel operation with the electrical system, the diesel breaker will be opened automatically via underfrequency relaying. It was determined that this would be the quickest method of tripping the EDG while it was trying to maintain the system loads. The operation of the underfrequency relaying will open the EDG breaker only, and is interlocked to operate only when the EDG is in parallel operation with the offsite system.

The opening of the EDG breaker causes an undervoltage condition on the affected bus. The EDG breaker will reclose automatically as soon as all designated loads are removed from the bus.

On occurrence of a LOCA and on receipt of an automatic signal from the power plant relays, each unit automatically "faststarts," comes to rated voltage and synchronous speed, and is capable of operating as an isolated source to start the loads sequentially. Table 8.3-5 shows the loading sequence. If a loss of system power has occurred, the EDG is automatically connected to the bus. If bus voltage is normal, the EDG stands by at synchronous speed and rated voltage.

The EDGs are capable of being started or of being restarted from a hot shutdown condition without outside auxiliary service, except the 130-V dc control source from divisional batteries. They reach rated voltage and synchronous speed (unloaded) within 10 sec after initiation of a starting signal.

The individual rating of each EDG is

a. Continuous 2850 kW

b. Short time (2 hr) 3135 kW

c.	2000 hr	3100 kW
d.	300 hr	3250 kW
e.	30 minute	3500 kW

Inlet and exhaust system pressure drops are considered for determining these ratings. Losses attributable to continuously driven electrical auxiliaries are deducted from the gross output of the EDGs, except for the EDG service water pump. Each generator is designed to operate as an isolated source or, for testing purposes, in parallel with a 4160-V, three-phase, three-wire, 60-Hz, resistor-grounded, 350-MVA electrical system. The system also operates with a high impedance ground system, isolated from the offsite system.

The generators are air-cooled, 80 percent power factor, 4l60 V, 60 Hz, Class F insulated, with a rating of 4063 kVA at a temperature rise not exceeding ANSI Standard MG-I (1972) at ambient temperature of 140°F. The EDG rooms of the RHR complex are designed for 122°F ambient. The generator stator coils are vacuum-pressure impregnated to provide resistance to moisture and contaminants.

The generators and excitation systems are designed so that, for the sequential starting of the motors, bus voltage shall not dip below an acceptable limit determined by test or systems analysis. Two different programs were used to perform the system analysis. The programs used are by Colt and Detroit Edison. Both of these analyses produced results very close to the requirements of Regulatory Guide 1.9. The preoperational test results show that EDG performance is very close to the recommendations of Regulatory Guide 1.9 (see Table 8.3-8). Voltage recovery time is held to the minimum possible after starting the first motor. The starting of subsequent motors does not reduce the bus voltage or frequency below the limits set forth in Regulatory Guide 1.9.

The only exception to Regulatory Guide 1.9 is the voltage dip when starting the RHR pumps (see Table 8.3-8 for comparison of Edison and Colt program calculated values and preoperational tests results as compared to Regulatory Guide 1.9, "Critical Requirements"). The voltage values and acceleration times were verified during preoperational testing. The results of the pre-operational test indicate that the initial voltage dip when starting of the RHR motor is acceptable and meets the intent of Regulatory Guide 1.9 section C.4 with clarifications as listed in UFSAR Appendix A. Regulatory Guide 1.9 section C.4 allows voltage levels below 75 percent when test results validate that a single large load will start and operate correctly prior to sequencing on the remaining load.

During preoperational testing, each diesel generator was started and loaded in the desired sequence, thus verifying their capabilities. In addition, the motor and pump torque curves were reviewed to ensure that the motor torque curve did not dip below the pump torque curve.

The EDGs are housed in reinforced-concrete, Category I structures. Each unit is completely enclosed in its own concrete cell and is isolated from the other units.

The units are connected to their respective 4.16-kV switchgear and control equipment by cables in underground ducts. There are two sets of Category I ductbanks between the RHR complex and the Reactor/Auxiliary building, with a Division I and Division II ductbank in each set. These cable duct runs meet necessary seismic design and Class 1E criteria, as explained in the following paragraphs. In each case, the buried cable ducts between the RHR

complex and the Reactor/Auxiliary building provide adequate cable separation to maintain independence of redundant circuits.

The first set of ductbanks was installed during plant construction. The physical separation of the two redundant, below-grade circuits is 30 ft at the point the cable ducts leave the southeast corner of the reactor building. The ducts make a sweeping bend with a minimum separation of 20 ft between them. After the bend, the ducts parallel the reactor building in a westerly direction with 24 ft separation. This separation is constant until the ducts pass under the rail car air lock where the separation widens until the ducts enter (still below grade) the RHR complex.

Because of the separation provided, the redundant cables will not be subject to a common mode failure from a tornado missile, or a redundant division cable causing failure in the surviving divisional cable. (See Section 3.5 for a discussion of missile protection.)

Each circuit is separately housed in a cast-in-place rectangular shaped reinforced-concrete duct. The duct is then covered by placing successive layers of compacted-rock fill up to the finished site grade of 583.0 ft. The duct runs vary in elevation from 573.0 ft minimum to 580.0 ft maximum. Since maximum groundwater elevation is 576.0 ft, the cables are not specifically designed for continuous underwater service. For low voltage power, control and instrumentation cables, there is no long term mechanism for water related insulation degradation due to lack of voltage stressor or a credible common mode failure mechanism. Therefore, low voltage cables perform their design functions while their external surface remains continuously wetted due to surrounding water. 4160-V essential power circuits are not routed within these ductbanks.

The minimum elevation for cable termination in either the RHR complex or reactor building is 588.7 ft, which is above the site probable stillwater elevation of 586.9 ft.

The cable duct runs are designed to meet Category I requirements.

The physical separation of the redundant cable duct run provides adequate protection against all of the defined missiles since any single missile could fall within the zone of influence of only one cable at a time. The defined tornado missiles, i.e., the 4-in. by 12-in. by 12-ft-long plank or the 4000-lb passenger automobile, cannot physically impact the zone around both cable duct runs at the same time. Additional protection is provided as the entire cable duct run is buried beneath a layer of compacted rock that varies in depth from 3 ft 0 in. to 10 ft 0 in., placed in layers up to the final site grade elevation.

The second set of ductbanks and associated manholes is installed above the maximum ground water elevation of 576.0 ft with ducts sloped to the manholes, such that circuits contained are not subject to continuous wetting. 4160-V essential power circuits are routed within these ductbanks. These are also cast-in-place, rectangular reinforced concrete ductbanks, but are located with the ductbank top approximately six inches below the surface and manhole covers at grade level. The ductbanks rise above grade at the entrance to the RHR complex and the Reactor/Auxiliary building. The Division I and Division II ductbanks are separated by approximately 25 feet at the Auxiliary building entrance. The separation narrows to approximately 10’-6” at the closest point as they make a sweeping turn and widens to approximately 20 feet at the entrance to manholes 16946A and 16947A. The ductbank separation again narrows to approximately 7’-8” at a top elevation of

approximately 580'-6" (three feet below grade) and runs underneath the ISFSI Transfer Pad to manholes 16946B and 16947B. The ductbanks exit manholes 16946B and 16947B with a separation of approximately 15 feet that increases to a separation of greater than 20 feet after approximately 30 feet from the manholes. The separation increases to approximately 115 feet during the run from manholes 16946 B and 16947B to manholes 16946C and 16947C, located near the RHR building. Ductbank separation for the ductbank run between manholes 16946C and 16947C and the RHR building cable vaults is greater than 80 feet.

The 4160-V RHR cable vaults and the manholes and ductbanks between these cable vaults and the Reactor/Auxiliary building cable vaults are designed as tornado missile barriers per the requirements of Regulatory Guide 1.76 Revision 1. Because of the tornado missile barrier design, the redundant cables will not be subject to a common mode failure from a tornado missile and, due to separation provided, a redundant division cable will not cause a failure in the surviving divisional cable. (See Sections 3.5, 3.12.3.2.3, and 9A.4.7.7 for a discussion of tornado missiles, separation, and fire protection, respectively.)

8.3.1.1.8.2 Location

Each diesel generator and its associated excitation system and switchgear are located within separate rooms in the RHR complex. The separating walls between units meet the same requirements as does the exterior of the building. The RHR complex structure serves to contain, protect, house, and support the equipment of the EDG system and protect it from the outdoor environment. In addition, the building is designed to the following requirements:

a. Each EDG is located in a separate compartment, with its own separate fuel-oil day tank and storage tank housed in a separate room

b. The EDGs are at Elevation 590 ft (New York Mean Tide, 1935), about 7 ft above the grade level of 583 ft. The associated switchgear and controls are located in separate rooms above the EDGs. The exciter-voltage regulator panel for each EDG is located in the EDG room

c. The building is protected against flood damage to Elevation 590 ft (New York Mean Tide, 1935)

d. The RHR complex structure is designed so that a turbine missile will not result in the failure of more than one system division

e. The total wind load pressures include positive and negative pressures, gust factor, and shape factor

f. The building is designed for a maximum roof live load of 70 lb/ft^2

g. Sufficient openings are provided in the structure for the combustion air inlet and exhaust piping and for the interior ventilation air

h. The generator end of the EDG is located to permit access to and removal of the generator

i. The EDG system is designed to be operable during and after a design-basis tornado that has the following characteristics:

NOTE: Effects of items i1., i2., and i5. are to be considered as acting simultaneously.

1. External wind forces resulting from the tornado funnel, which have a horizontal peripheral velocity of 300 mph and a transient horizontal velocity of 60 mph
2. Differential pressure between inside and outside of fully enclosed areas - 3 lb/in.^{2}
3. The ability to generate a missile equivalent to a 4-in. by 12-in. by 12-ft-long wood plank traveling end-on at 225 mph or a passenger auto (4000 lb) flying through the air at 50 mph and at not more than 25 ft above ground with a contact area of 20 ft^2
4. For torsional design the structures were considered engulfed in a tornado of a diameter equal to the diagonal dimension of the complex. Positive and negative pressures were applied to each wall proportional to the normal component of the tangential wind velocity
5. All building structures housing equipment necessary for safe shutdown are designed to withstand a tornado-induced depressurization rate of l lb/in.^{2}/sec for 3 sec. The Category I 4160-V RHR cable vaults and the manholes and ductbanks between these cable vaults and the Reactor/Auxiliary building cable vaults are designed to withstand a tornado-induced depressurization rate of 0.5 lb/in.^{2}/sec for 2.4 seconds, in accordance with Regulatory Guide 1.76 Revision 1 (March 2007). (See section 3.3.2.1 for a discussion of tornado protection.)

j. The complex is a Category I structure

k. It is impossible to recirculate the diesel generator exhaust to the diesel generator combustion air intake except under extremely adverse meteorological conditions. The diesel generator exhaust is 25 ft higher than and 50 ft horizontally away from the ventilation and combustion air intakes for the RHR building. Only a small fraction of the exhaust could recirculate to these intakes under extremely adverse conditions. Each ventilation and air intake is approximately 89,000 cfm, of which about 14,000 cfm (16 percent) is combustion air for the diesel generators. The small amount of exhaust that could be recirculated would be thoroughly mixed in the combustion and ventilation air intake system. Therefore, the amount of combustion products in the combustion air intake would be a fraction of the fraction of recirculated exhaust. Recirculation of exhaust products has been used to reduce NOX emissions, and tests have been performed in which there was no deleterious effect on engine capacity and performance for exhaust recirculation over 12 percent. There is no possibility that the diesel generator exhaust could dilute even nearly this much. Therefore, there is no possibility that the diesel generator could not develop full rated power due to exhaust recirculation

l. Abnormal climatic conditions such as heavy rain, freezing rain, dust storms, ice, and snow will not affect the diesel combustion air intake or exhaust

The diesel engine combustion air inlet filter is located inside the RHR complex structure. Combustion air is 14,000 cfm of the 89,000 cfm total (combustion plus ventilation) admitted through a louvered wall opening and a missile shield. Abnormal climatic conditions will not affect the diesel engine combustion air intake

The diesel engine exhaust silencer is located on the roof of the RHR complex and is surrounded by a missile shield enclosure. The exhaust silencer is provided with an open drain to relieve any condensate that may collect through the exhaust pipe

m. All of the critical electrical equipment required for operation of the EDGs, including switchgear, MCCs, and diesel generator control panels, is located within that diesel generator's separate heating, ventilation, and air conditioning (HVAC) system. These independent HVAC systems for each EDG use filtered outside air and maintain the rooms at positive pressure to preclude the infiltration of unfiltered outside air. The HVAC inlet takes air from the upper level of the RHR building at an elevation of 617 ft, while the grade level of the building is 583 ft. The diesel air combustion system, including the inlet and exhaust, is completely separate from the HVAC systems. These features protect the electrical equipment from dust particles

In addition, the diesel generators and the starting systems of associated electrical equipment are inspected and tested periodically to ensure the availability of the diesel generator on demand

The control cabinets are located in the switchgear room. The control voltage on the diesel generators is 130 V dc; this voltage level reduces problems of dust on contacts in the diesel generators control circuits.

All the above features provide protection to the electrical equipment from dust particles.

8.3.1.1.8.3 Emergency Diesel Generator Rating and Sizing

The following general sizing parameters were applied to the EDG:

a. Each unit shall be at rated voltage and frequency within 10 sec

b. Each unit shall be sized to carry the full requirement of postaccident loads

c. Each unit shall be capable of sequentially starting the large RHR pumps (2000-hp motors for pumps A, B, and C and 2250-hp for pump D) and the 800-hp core spray pump motors while maintaining a voltage and frequency as close as possible to Regulatory Guide l.9 requirements and still maintain parameter a (See Table 8.3-8.). The results of the pre-operational test indicate that the initial voltage dip when starting of the RHR motor is acceptable and meets the intent of Regulatory Guide 1.9, section C.4 with clarifications as listed in UFSAR Appendix A. Regulatory Guide 1.9, section C.4 allows voltage levels below 75 percent when test results validate that a single large load will start and operate correctly prior to sequencing on the remaining load.

The Colt Industries Fairbanks-Morse units chosen were extensively tested to prove their ability to achieve rated speed and voltage in less than 10 sec.

Before delivery, each engine was given a wear-in run during which operation was gradually increased from idle speed, no load, to full speed and full-load. Between each step in the wear-in run, the unit was shut down and inspected. The unit was then given a full-load test run, with necessary temperature and pressure measurements to verify performance. After completion of the test run, the unit was given a post-trial inspection. After post-trial reassembly, a final check run was conducted. The generators were given tests in accordance with ASA-C-50. Further testing of the EDGs to start rapidly, accept load, and provide proper voltage response (using actual or simulated Fermi 2 emergency loads) was performed during the preoperational testing program, as described in Subsection 8.3.1.2.2.2.

Colt Industries has demonstrated the ability of the 38TD8-1/8 engine to withstand repeated starts and load pickups (see Reference 1). The engine successfully started, loaded, stopped, cooled down, and repeated the cycle l00 times without adjustment, failure, or excessive engine wear. Further discussion of this test is found in IEEE Conference Paper 69 CP 177-PWR (Reference 2).

Fifteen large-size Colt units had been qualified and were providing standby service at seven operating nuclear plants, as shown in Table 8.3-9. Included in this list is the Duane Arnold Energy Center. The Colt Industries EDGs at this plant have a continuous rating of 2850 kW, the same rating as Fermi 2.

Branch Technical Position EICSB 2 states that the diesel generator reliability qualification is needed for (1) larger capacity machines than previously used, or (2) nonstandard diesel generator arrangements. Since the Fermi 2 Colt EDGs have been qualified previously, since a previous nuclear standby unit of the same size is considered qualified, and since the Fermi 2 onsite power system is a standard design in compliance with Regulatory Guide 1.6, the Fermi 2 EDGs are in full compliance with the reliability qualification requirements of Branch Technical Position EICSB 2.

A demonstration test program, developed and implemented by Edison, confirmed the reliability of the EDGs. This program simulated the number of slow and fast starts that would be expected of an EDG over an 18-month fuel cycle and run time that might be needed to assure safe shutdown of the plant if EDG operation were required following a LOCA. This translated into 20 prelubed slow starts and 10 prelubed fast starts, and included a 7-day continuous run. After each start, the EDG was run under load for a minimum of 2 hr, including 1 hr at a load of 2500- 2600 kW. After each run, the EDG upper crankshaft main bearings were gap checked. The EDGs 11 and 13 were selected for the demonstration test program on the basis of their operating and maintenance histories and because they are in separate divisions. All aspects of the demonstration test were successfully completed on both EDGs and therefore it was concluded that the Fermi 2 EDGs could reliably perform their intended function.

The total loads on each diesel generator are shown in Tables 8.3-3 and 8.3-4. These tables show load requirements for loss of offsite power and LOCA. For all conditions calculated, the loads are within the short-time rating of the diesel generator in compliance with paragraph C.2 of Regulatory Guide 1.9, Revision 2.

The ability to recover voltage and frequency over load increments was the most critical parameter in the selection process for the EDG. The response of the units to the load sequence shown in Table 8.3-5 was analyzed using simulations by Colt Industries and by Edison. The results shown in Table 8.3-8 indicate compliance or near compliance with Regulatory Guide 1.9. Both models, and the preoperational test results, yield roughly the same results. The results of the pre-operational test indicate that the initial voltage dip when starting of the RHR motor is acceptable and meets the intent of Regulatory Guide 1.9 section C.4 with clarifications as listed in UFSAR Appendix A. Regulatory Guide 1.9 section C.4 allows voltage levels below 75 percent when test results validate that a single large load will start and operate correctly prior to sequencing on the remaining load. The Edison program does not analyze generator frequency transients. Table 8.3-8 also includes Coltec study and test results for EDG loading response using a Woodward 2301A based governor control system and Basler series boost exciter-voltage regulator.

8.3.1.1.8.4 Emergency Diesel-Generator Fuel System

For a detailed description of the EDG fuel system, refer to Subsection 9.5.4.

8.3.1.1.8.5 Emergency Diesel-Generator Cooling and Heating System

Each diesel unit has a self-contained, jacket-closed cooling water system that consists of an engine-driven pump, a heat exchanger using the RHR service water (RHRSW) as the heat sink, a l5-kW standby heater, and a standby coolant circulating pump. The standby heater and pump maintain a constant water temperature to ensure uniformly fast starts.

Lube oil is maintained at a constant temperature by a 15-kW heater and a standby lube-oil circulating pump to enable the machine to start reliably.

A separate service water pump and separate service water piping system are provided for each diesel engine (Subsection 9.5.5).

8.3.1.1.8.6 Emergency Diesel-Generator Starting System

Two air-operated starting subsystems are furnished for each EDG. Each starting subsystem is of the air- over-piston type supplied from one accumulator. Periodic tests verify the operability of the air start system and its components.

Each starting subsystem includes a separate air header, accumulator, piping, and air start distributor and can independently start the EDG. The fast start feature is ensured by utilizing both starting air subsystems.

Two accumulators are furnished for each unit, and they have the capability to start the unit a minimum of five times without recharging. Each accumulator is furnished with a shutoff cock, pressure gage, drain valve, safety valve, check valve, and sensing element for low-pressure alarm.

One 460-V ac, three-phase, motor-driven air compressor is furnished for each EDG. The compressor recharges the accumulators to normal operating pressure; recharging, when required, is automatic.

Redundant starting solenoid valves with continuous-duty coils are used. All solenoid valves have manual bypass valves for use in case of failure of the solenoid valve.

8.3.1.1.8.7 Emergency Diesel-Generator Control System

Each EDG has a local control panel and annunciator, as well as control and annunciator alarms in the main control room. The control functions provided are listed in Table 8.3-10. The provided metering is given in Table 8.3-11.

Control power for each diesel comes from a highly reliable Class 1E battery. The two diesels providing power for the safety system of Division I receive their control source from the two 130-V dc batteries of that division. The two diesels of the other divisions are supplied, in like manner, by the Division II control batteries.

Table 8.3-12 lists the parameters annunciated at the local EDG control panel. Table 8.3-13 provides a list of the EDG parameters monitored in the main control room.

The diesel generator air intake and exhaust systems do not require the alarming of any parameter except for the differential pressure across the intake filter. An indicator and switch are installed to locally monitor the air intake filter and alarm in the main control room. The combustion air intake and exhaust systems have no interlocks.

Controls and monitoring instrumentation critical to the continued operation of the EDG are protected from engine vibration. The annunciator and other control equipment are mounted on freestanding electric control panels. The engine gage boards are mounted in a cradle on vibration isolation springs. The relays pertaining to operation of skid equipment that were in a skid-mounted relay box have been moved to a wall-mounted panel.

8.3.1.1.8.8 Other Plants Utilizing Colt Emergency Diesel Generators

Table 8.3-9 lists other nuclear plants that use Colt Industries' EDGs of the same type as Fermi 2 for their standby power source.

8.3.1.1.9 Class 1E Instrument 120-V AC Power Supply

The 120-V ac power supply provides power for both Class 1E instrumentation and control and for certain ac control valves and solenoids. The system is shown in Figure 8.3-7 and the loads are tabulated in Table 8.3-14.

There are two Class 1E 120-V ac nominal power supplies, one per division. Each supply is a separate modular power supply unit rated at 45 kVA. A modular power unit consists of an automatic transfer switch with appropriate sensing devices, three single-phase transformers, and two line voltage regulators. Each modular power supply unit has two power sources at 480 V ac, each fed from a different MCC in the same division, which improves reliability. Power is selected from one of the two feeds and will transfer to the other feed on an undervoltage condition of 83 to 85 percent if maintained for 1 sec (nominal), provided that the alternate source is above 90 percent rated voltage and frequency.

The modular power supply unit has three distribution cabinets providing outputs, each 120 V ac nominal, 15 kVA. One is for inductive loads such as solenoid valves and similar applications where minor variations of voltage can be tolerated. Two outputs are 120 V ac

nominal, 15 kVA, regulated power for instrumentation loads, the regulated outputs of MPU 1 and MPU 2 are bounded by the electrical design calculations to ensure that the regulated output voltage variations are within the tolerances for proper operation of the instrumentation loads. During the period when the common offsite power for both divisional MCCs is lost, these units will be powered by the respective division EDG within approximately 18 sec after loss of power.

Important, but not safety-related, loads such as feedwater control and the Integrated Plant Computer System (IPCS) are fed from a BOP uninterruptible power supply.

The instrument loads are such that they can tolerate a short power outage without unacceptably degrading plant safety.

8.3.1.1.10 Reactor Protection System 120-V AC Power System

A separate power system is provided for the reactor protection system (RPS) and certain other instrumentation, as described in Subsection 7.2.1.1.2.

The power feeds to the RPS 120-V ac power system are

a.	Motor-generator set A:	480-V MCC72B-4C pos 2C.
b.	Alternate A:	Distribution Cabinet 72C-2D pos 2 via a 480/120-V single-phase transformer feeding a 120-V regulator.
c.	Motor-generator set B:	480-V MCC 72E-5B, pos 1C-R.
d.	Alternate B:	Distribution Cabinet 72F-4B, pos 2 via a 480/120-V single-phase transformer feeding a 120-V regulator.

The alternate RPS feeds serve primarily as maintenance ties. No automatic transfer occurs between the normal and alternate sources because the loss of one motor-generator set will not cause a scram.

8.3.1.1.11 Instrumentation and Control Systems

The instrumentation and control required for the ESFs listed in Tables 8.1-1 and 8.1-2 are powered by the ac control and instrument buses shown in Figure 8.3-7, and by the dc buses shown in Figure 8.3-9. These buses provide the same reliability for control and instrumentation as is afforded by the equipment power supply. The instrumentation provides the operator with complete information on plant conditions. He receives all the information required to base a decision on adjusting loads or manually initiating loads, particularly when shutting down the emergency power supply.

Manual controls necessary for emergency equipment are all located in the main control room. The EDGs and their accessories have local control and instrumentation, in addition to that provided remotely in the main control room. On loss of offsite power and subsequent

transfer to the emergency power supply (diesel generator), the following information is presented to the operator:

a. Load on the EDGs as well as the remaining EDG capacity is displayed in the main control room

   A digital "EDG remaining loading capability" instrument is provided for each EDG. With the EDG unloaded, this instrument will indicate the full rated loading capability in kilowatts. As soon as load is applied (automatic or manual), this digital instrument will display the remaining capability of the EDG. This information enables the operator to take appropriate action to avoid the remote possibility of the affected EDG becoming overloaded

b. Emergency core cooling system (ECCS) conditions are indicated as follows:

   1. High-pressure coolant injection - There is main control room indication of pump discharge flow and pressure, and local indication of steam flow
   2. Core spray - There is main control room indication of pump discharge flow and pressure plus current to the motors
   3. RHR - There is main control room indication of pump discharge flow and pressure plus current to the motors
   4. Automatic depressurization system (ADS) - There is main control room indication of valve position
   5. RHRSW - There is main control room indication of RHRSW flow and discharge temperature from the heat exchanger and the current to the pump motors.

c. Automatically initiated loads are connected as outlined in Table 8.3-3. They are adjusted manually for the conditions listed in Table 8.3-4.

8.3.1.1.12 Circuit Protection

8.3.1.1.12.1 Grounding

The general plant ground mass is formed by ringing each structure of the plant with bare copper cables and interconnecting the ground masses of the individual buildings. All connections are made by the cadweld process.

Separate cadwelded risers are used for the following ground systems:

a. Equipment ground system
b. Main turbine generator ground system
c. Instrument ground system.

The equipment ground system consists of multiple bare copper conductors with taps on each floor for equipment grounding. All motors, equipment cabinets, and ground buses are to be connected directly to the risers. The cable tray system is intended to be electrically continuous and is connected to the equipment ground risers.

Each tray or tray run is provided with a copper conductor connected to each section of tray and to the ground mass. All instrument grounds and case grounds are normally connected to the equipment ground. Local instruments are grounded using the equipment ground provided by the cable tray system.

The turbine-generator ground system consists of a double ring of 1/4- by 4-in. copper ground bars linked to the generator by two 500 MCM bare copper cables.

The instrument ground system is designed using an insulated cable connected directly to the station ground mass. This ground system is designed to provide a low noise ground for the computer system. One isolated riser is terminated on a ground bus bar in the relay room area to accommodate unusual field grounding problems.

All stairs and piping systems are grounded.

The 4.16-kV system is normally connected to neutral ground via 4-ohm resistors at the service transformers to limit ground fault current. When the vital system is fed from the EDGs, this ground is removed and the 4.16-kV system is operated as a high impedance ground system, with grounding accomplished through an impedance at the EDG neutral. The EDG high resistance grounding system allows continued operation of the EDG in the presence of a ground fault by limiting the ground fault current to a very low value, thus permitting operation of both the EDG and 4.16 kV loads. This feature provides the Operators with additional flexibility and enhanced equipment availability until an orderly transfer or equipment shutdown can be accomplished. All other power systems are directly grounded through the transformer neutrals..

8.3.1.1.12.2 Circuit Protection

The 4160-V bus feeder circuits have three phases of inverse time overcurrent plus inverse time neutral (ground) fault relay protection. The inverse time ground overcurrent relays, for the most part, monitor the neutral of the current transformers used for the phase overcurrent relays. The protective relays are GE-type IAC. These relays meet the seismic qualifications necessary for Class 1E equipment.

Motors, feeders, and other loads on the 4160-V buses have two phases of inverse time overcurrent relaying plus instantaneous ground fault protection using the ground fault sensor principle. The ground fault sensor is essentially a CT-like device that surrounds the three load conductors and detects any imbalance that occurs. The relays used with the ground fault sensors are GE-type PJC instantaneous overcurrent.

All protective relays are calibrated to provide the proper sequence of operation, which ensures that selective tripping will occur. The feeder circuit phase relays are calibrated to give at least 30 cycles of margin at the associated branch circuit relay calibration trip point. The feeder neutral or ground relays are calibrated to provide a 0.4-sec margin above the branch circuit neutral relay setting.

Devices fed from 480-V ac switchgear have time overcurrent protection that is applied in accordance with the latest industry standards. At Fermi 2 this protection is provided by solid-state devices known as "Power Shield." These devices are supplied as an integral part of the 480-V circuit breakers. The long time, short time, and instantaneous trip elements perform essentially the same protective functions as provided by the electromechanical trip

devices, but with greater accuracy and repeatability due primarily to the absence of mechanical moving parts. These devices, being solid state, easily meet the seismic qualifications for the Class 1E equipment. Motor feeders are equipped with phase-instantaneous and time-delay overcurrent relaying, with a neutral solid-state instantaneous ground sensor device.

Each ESF bus located in the RHR complex, the feeder cable to the ESF bus in the reactor building, and the feeder breaker are protected by an overall differential relay scheme. In addition to the superior ability of a differential to detect bus faults, the use of such a scheme avoids the problems associated with an overcurrent relay scheme on a feeder where full load currents are different when the feed direction reverses.

When the EDGs are operating in parallel with offsite power, several protective relay functions are used to protect both the generator and engine. These trips are listed in Table 8.3-12 for both the test condition and emergency condition.

Under conditions that cause pickup of the emergency start relays, all of the trip circuits are blocked, with the exception of overspeed trip, generator differential, low lube-oil pressure, crank-case overpressure, and start failure trip. The low lube-oil pressure and crankcase overpressure trips are each connected in a two-out-of-three logic (one out of three causes an alarm only). Although there is one start failure relay, once the engine is started, either the low speed or running speed relays will inhibit initiation of the start failure relay.

There are two emergency start relays: either of these relays will initiate EDG starting as well as bypass the unnecessary trips. All of the bypassed trip circuits still retain their alarm function to alert the operator to an abnormal condition. Since the trip bypass is achieved with the emergency start relays, the bypass circuitry is directly monitored by the annunciator position "EDG - Auto Start." Surveillance tests on the emergency start relays will also test the status and operability of the bypass circuits. The EDG logic is designed so that the nonemergency trip relay is automatically reset by the emergency start signal. (Nonemergency trips are those other than the emergency-mode trips described above.) This feature prevents the inadvertent lockout of an EDG during standby by a false or real nonemergency-mode trip.

Devices such as motors fed from MCCs are protected by fused disconnect switches and thermal overloads. Non-motor-type loads are protected by circuit breakers. Overload settings are 125 percent or greater of full load current for nonessential items and 140 percent or greater of full load current for ESF loads.

At Fermi 2, the thermal overload devices on the ESF system motor-operated valves (MOVs) were selected to allow at least four times the valve stroke time at full load current and at least one time the valve stroke time at motor current associated with twice running torque. These criteria were used because it is felt that operation of the valve motors when needed supersedes any concern with degradation or failure of the motor due to excess heating.

Additional protection against premature operation is afforded by the thermal overload devices' being located at the MCCs and not at the motors themselves. All thermal overload devices are temperature compensated.

Branch short-circuit protection is provided by dual-element fuses (fusetrons) sized to override starting currents, yet maintain coordination with the thermal overload devices.

Preoperational testing ensured that thermal overload setpoints were calibrated properly. As necessary, full load current measurements were made to verify adequacy of the thermal overload device settings. Periodic tests will serve to ensure that the trip setpoints of the thermal overload devices have not drifted below the allowable tolerance of 5 percent.

All circuits of the ESF buses are tripped on undervoltage, except feeds to the 4160/480-V transformers and selected MCCs with small load requirements. This allows each bus to be cleared when bringing up the EDG.

8.3.1.1.13 Maintenance and Testing

8.3.1.1.13.1 Auxiliary Electrical Power Systems

The 4160-V ac circuit breaker and associated equipment can be tested by jacking out the breaker to the test position. (The testing of certain systems is not possible during operation.)

The breaker opening and closing circuits can be operated without energizing the circuit in this test position. Test stations are provided for each ESF switchgear room, with the exception of the EDGs, because of the small number of breakers.

The 480-V ac circuit breakers for motor circuits and associated equipment can be tested if they are jacked to the test position. This allows breaker operation checks without energizing the circuit.

Incidents involving the inadvertent disabling of a component by racking out the circuit breaker of its redundant counterpart have occurred in nuclear power plants. At Fermi 2 several steps have been taken to preclude such an occurrence.

The 4160-V and 480-V switchgear (ESF and BOP) incorporate 52H auxiliary switches as applicable as part of the design. These individual cell-mounted auxiliary switches are actuated by the location of the circuit breaker. When the breaker is in either the test or disconnected position, the 52H/a contacts are open and the 52H/b contacts are closed, and vice versa when the breaker is fully racked in and connected. These contacts are wired to bypass the breaker-operated auxiliary contacts, as necessary, when the circuit breakers are in the disconnected or test position. Their specific purpose is to eliminate undesired signals and avoid disabling other equipment due to testing or removal of a circuit breaker.

All systems were checked during design for the presence of disabling interlocks. If an interlock had been inadvertently wired in even after design review was complete, construction testing procedures should have detected this condition. The preoperational tests served as the final test for the presence of disabling interlocks.

The 4160-V and 480-V breaker operating and protective relay tests were performed initially by performing checkout and initial operating (CAIO) tests. These tests were performed after the construction phase and consisted of initial equipment energizing, calibration, and functional testing of components.

Preoperational or acceptance tests and protective relay tests were performed before fuel load.

a. Preoperational or acceptance tests were system operating tests, which verified adequacy of individual components, instruments, interlocks, alarms, etc., to function as a system

b. Protective relay final verification and required retesting were also performed because construction and CAIO testing could and sometimes did alter the required final relay settings.

For CAIO and preoperational testing, instructions meeting the requirements of IEEE 336-1971, IEEE 279-1971, and others as applicable were written to ensure the adequacy of tests to be made on the electrical equipment.

The test package for a particular component included a test procedure, test forms, a check-off list to ensure completion, and an overlay test sheet to indicate, among other things, test equipment certification and approval by a responsible individual.

The test instructions described and indicated the purpose and scope of the tests, the equipment to be tested, the specifications and drawings to be used, the test equipment required, the precautions to be taken, and the prerequisites. Also included were the test procedure itself and the method of handling deviations or variances.

The personnel who performed this testing were engineers or technicians from several divisions of Edison who were qualified with respect to the concerned equipment, the test equipment to be used, and the procedures and precautions to be followed.

Subsequent tests will be performed in accordance with the Preventive Maintenance Program and surveillance program. Scheduled inspections of circuit breakers, contactors, and associated equipment to ensure adequacy of installation, mechanical and electrical clearances, cleanliness, and operability are conducted as specified in approved instructions and the Preventive Maintenance Program.

8.3.1.1.13.2 Standby AC Power System

Because the EDGs are used as standby units, readiness is of prime importance. The testing program is designed to test both the ability to start the system and the ability to run under load long enough to demonstrate that cooling and lubrication are adequate and that auxiliary system functions are satisfactory for an extended period of operation.

Each generator unit is capable of being synchronized manually for parallel operation with the normal plant ac power buses for load test runs. To ensure availability of the systems, one EDG at a time is routinely started and loaded in parallel with the offsite power systems. Tests of the automatic EDG functions are conducted as required to demonstrate proper operation. Details are contained in the Technical Specifications.

Plant operating procedures require application of approximately 30 percent load immediately after synchronization, with subsequent testing performed at loads of 50 percent or greater. To preclude formation of gum and varnish deposits in engine components, extended operation at less than 25 percent load is not required.

An initial system test was performed to demonstrate that the standby power supply can be started and can accept design load within the design-basis time, and that the standby power supply is independent of the offsite power supply.

The surveillance testing of the EDGs is scheduled in accordance with the Technical Specifications.

Component failures of the EDGs are addressed in the plant preventive maintenance program and are identified in the equipment performance evaluation analysis. Component failures are analyzed with respect to frequency, application, design, and manufacturing defects. Component failures are thereby corrected by problem analysis and engineering judgment.

Postmaintenance functional checks, before postmaintenance operability testing, of the individual EDG subsystems and components are specified in the plant procedures. These procedures verify the status of temporary modifications, that is, lifted leads or jumpers; electrical power feeds and switch lineups; valve lineups; and support system operability. The postmaintenance testing verifies the Technical Specifications operability requirements, and the updating of the equipment status board ensures the placement of the EDG in the automatic standby mode by the control room operator.

8.3.1.1.14 Operation of Breakers Associated With Bus 64B

In the following description, only ESF bus 64B will be considered. Breakers on buses 64C, 65E, and 65F operate in a similar manner. The description is typical of any of the vital load groups shown in Figure 8.3-1. Various relays will be referenced by their standard device function identification number as follows:

a. 51 - Time overcurrent relays

b. N51 - Time overcurrent neutral relay

c. 87B - Bus differential relays

d. 27 - Under/voltage relays.

8.3.1.1.14.1 Feed to Bus 64B

Bus 64B normally receives power from transformer SS64 via breaker B6, but it can also receive power from alternate sources, as discussed in Subsection 8.3.1.1.14.3.

8.3.1.1.14.2 Loss of Power to Bus 64B

In an emergency situation, such as loss of power to transformer SS64, EDG ll automatically starts, and the affected buses are cleared of loads. After the EDG reaches rated voltage and speed, EDG breaker EA3 will close automatically, and EDG ll will provide power to bus 64B, via breaker B8.

8.3.1.1.14.3 Maintenance Tie for Bus 64B

During maintenance operations, power can be supplied to bus 64B via breakers 65T and B9. If it is desired to have uninterrupted power to bus 64B during maintenance, EDG ll must be manually started and synchronized with bus 64B via breaker EA3. All of the load on 64B would be manually transferred to EDG-11, breaker B6 would be opened, breaker 65T would be closed, and Division I would be paralleled with Division II via breaker B9. The load would be manually transferred from EDG 11 to Division II, breaker EA3 would be opened and EDG 11 shut down. The reverse of the above would be followed to return bus 64B from a maintenance feed to its normal supply from transformer SS64.

8.3.1.1.14.4 Limitations on Use of Maintenance Tie

The design limitations on the use of the maintenance ties are as follows:

a. When power is provided to Division I from Division II via maintenance tie breaker 65T, the sum of the current through breakers 65T and C9 or B9 should not exceed 1200 amp

b. When power is provided to Division II from Division I via maintenance tie breaker 64T, the sum of the current through breakers E9 or F9 and 64T should not exceed 1200 amps.

8.3.1.1.14.5 Breaker Operation

For operation of breakers B9, B6, B8, EA5, 65T, EA3, and buses 64B and 11EA, refer to the logic diagram in Figure 8.3-8.

8.3.1.2 Analysis

8.3.1.2.1 Auxiliary Electrical Power Systems

8.3.1.2.1.1 Safety Design Basis

The auxiliary electrical power system provides adequate power to operate all auxiliary loads necessary for plant operation and safe shutdown of the reactor. The number of power sources for the plant auxiliary electrical power system is sufficient, and of such electrical and physical independence, that no single event would interrupt all auxiliary power at one time.

The ESF buses may be connected, by appropriate switching operations, to alternative sources of offsite power for maintenance purposes only. In the event of a total loss of external power sources, emergency auxiliary power is supplied from the plant EDG system located on the site. The EDG system sources are physically independent of any normal offsite power system. Each power source, up to the point of its connection to the auxiliary power bus, is capable of complete and rapid electrical isolation to prevent paralleling of power sources.

Duplicate electrical loads are diversified among auxiliary power buses. Plant layout criteria include the separation of switchgear sections, motor feeders, and similar equipment groups, so that no single postulated accident causes total loss of power to critical loads.

The auxiliary electrical power system takes into account General Design Criteria 17 and 18, and is designed accordingly.

8.3.1.2.1.2 Safety Evaluation

Normal power for ESF buses is from the 345-kv and 120-kV transmission systems by means of two system service transformers. One transformer is from the 345-kV station bus 301. The other is from the 120-kV bus 101 via transformer 1. All 345-kV and 120-kV buses have more than one offsite power source.

Redundancy of buses within the plant and the division of critical loads between buses yield a system that has a high degree of reliability and integrity.

Segregation of buses and components limits or localizes the consequences of electrical faults or mechanical accidents occurring at any point in the system.

All breakers and transformers are rated according to standard electrical industry practices and applicable IEEE, NEMA, and ANSI standards.

8.3.1.2.2 Standby AC Power Supply System

8.3.1.2.2.1 Safety Design Basis

The design of the onsite standby ac power supply system is a one ESF bus/one-EDG arrangement (two such arrangements per ESF division) with the redundant loads of each division split among four buses. Each EDG is of sufficient capacity to carry the essential loads of its respective bus. A single failure that could cause the loss of a division pair of EDGs would not prevent safe reactor shutdown.

The EDGs start automatically and reach rated frequency and voltage within a maximum of 10 sec. They either automatically close into the bus and load, if offsite power is lost, or they stand by at rated speed and voltage, if offsite power is still available. The EDG fuel-oil storage tanks are of sufficient capacity to meet the EDG fuel requirements for at least 7 days. The EDG fuel-oil storage tanks are located inside the RHR complex in separate enclosed rooms. Refer to Subsection 9.5.4 for details. Two fuel pumps are provided for each EDG. Either pump is adequate to maintain the proper level in the fuel day tank, thus providing 100 percent redundancy. The EDGs are equipped for manual periodic starting, synchronizing, and loading to permit readiness testing without interrupting normal plant operation.

8.3.1.2.2.2 Compliance With Design Criteria

The design of the standby ac power supply system is based on the requirements of Regulatory Guide 1.6 and IEEE 308-1971, and com-plies with General Design Criteria 17 and 18. The two redundant ac systems are completely independent except for the one swing bus which has double safety interlocks to ensure against tying divisions together at the bus (Subsection 8.3.1.4). The loads on this bus are the low pressure coolant injection (LPCI) system injection valves and recirculation pump suction and discharge valves.

The standby ac power supply system meets the requirements of Regulatory Guide 1.9 except for certain voltage and frequency requirements. Table 8.3-8 gives an analysis of large-motor starting ability. The two motors considered were the RHR pump motors (2000-hp motors for pumps A,B, and C and 2250-hp for pump D) and the 800-hp core spray pump motor. Depending on the analysis used, the voltage dip when starting the RHR pump and the recovery time when starting the core spray pump exceed the stated limits. A detailed test program has been conducted to ensure the adequacy of the EDG.

Field tests were performed to prove the Fermi 2 EDG capabilities for the following items:

a. Rapid start

b. Voltage response

c. Load acceptance.

Quantities recorded during these tests included

a. Generator voltage

b. Generator current

c. Generator kilowatts

d. Field voltage and current

e. Motor current

f. Frequency

g. Elapsed time

h. Motor speed

i. Motor-connected load (such as pump flow and pressure)

j. Other quantities as necessary.

Detailed procedures for these tests were developed as part of the Startup (Preoperational) Test Program, to meet the criteria established in Regulatory Guide 1.41.

8.3.1.2.2.3 Safety Evaluation

The primary bases for selecting EDGs are reliability and total independence. Normal sources of power are extremely reliable, and the probability of coincident failures of all sources of offsite power into the plant is very low. The EDGs are provided as onsite power sources to provide backup to the offsite sources of power. It is imperative that the EDGs are not influenced by the same environment that affects the offsite power sources. For these reasons, the diesel generator units, which are selfsustained and require no offsite electrical power sources for operation, were selected as standby auxiliary power sources.

The ability of the EDG to start rapidly on demand is consistent with the concept of maintaining continuity of the ECCS under accident or emergency conditions. A continuous source of auxiliary power for the plant is ensured by the facilities described previously. The reliability demonstration tests are discussed in Subsection 8.3.1.1.8.3.

The following events occur in the order indicated for (a) a LOCA, or (b) a loss of offsite power:

a. The EDGs are started automatically. After reaching rated speed and voltage, they are ready to be loaded. However, the breakers remain open

b. If there has also been a loss of offsite auxiliary power sources, all 4160-V and 480-V feeder breakers on the service buses are tripped open, except for the 4l60/480-V transformers and certain essential breakers for MCCs

   At the same time the divisional EDGs are started, and after reaching rated speed and voltage, the respective EDG breakers will close automatically

c. When the voltage on an ESF bus is restored by the EDG, essential auxiliaries are started automatically in a predetermined sequence. Manual operation from

the main control room is also available for all essential auxiliaries. The EDGs can be stopped manually if offsite power is restored.

The control circuits are designed to provide the automatic features described. They allow the reactor operator to take other appropriate action as circumstances require.

Monitoring of automatic functions is provided in the main control room, thereby permitting the reactor operator to observe that proper conditions have been established.

All components of the EDG system are designed, constructed, and enclosed in accordance with the performance objectives for Category I design. Similarly, the entire system as well as the structures surrounding the system are protected against other natural and man-made phenomena.

8.3.1.2.3 Class 1E Electrical Equipment in Hostile Environments

Safety-related equipment required to operate in hostile environments and its environmental qualifications are given in Section 3.11. Section 3.11 defines the environmental conditions for various areas of the plant. Tables 3.11-1 and 3.11-3 give the accident basis environmental envelope. Table 3.11-4 lists the safety equipment and its operating environment both inside and outside the primary containment.

8.3.1.2.4 Loss of Non-Class 1E Instrumentation and Control Power System Bus During Power Operation

IE Bulletin 79-27 addresses a loss of an instrumentation bus, either safety related or not safety related, that could affect the ability to attain cold-shutdown status.

Fermi 2 has redundant systems that can be used to attain a cold-shutdown status. These systems are discussed in Chapter 6.

The instrument power supplies for the following engineered safety systems were reviewed for IE Bulletin 79-27:

a. High-pressure coolant injection (HPCI)

b. Reactor core isolation cooling (RCIC)

c. Automatic depressurization

d. Core spray

e. Residual heat removal (RHR)

f. Reactor protection

For the purposes of the review, a complete loss of the feedwater system was assumed.

The results of the review indicated that no modifications were required at Fermi 2 to ensure the attainment of cold shutdown according to the concerns of IE Bulletin 79-27. This conclusion is based on the following:

a. Instrumentation associated with systems required for a cold shutdown is powered from ac and/or dc sources

1. The ac instrumentation is fed from 480-V MCC 72B-2A or 72C-3A (Division I) and MCC 72F-2A or 72E-5A (Division II). Each of these feeds a delta-connected transformer bank that, in turn, feeds three instrumentation and control buses. Each of these buses is separately fused, and each bus has only seven loads, all of which are separately fused. Figure 8.3-7 shows this configuration. Each feeder powers a distribution cabinet, and circuits from each distribution cabinet are individually fused. These circuits feed individual instrument loops, which consist of an instrumentation power supply, transmitter, and indicating instrument
2. The dc instrumentation is powered by 130-V batteries (one per division) or by 24-V batteries (one per division). Each of these dc distribution systems has characteristics similar to those of the ac system described above.

Thus, the instrumentation power system at Fermi 2 is very diverse.

b. If a main ac power source is lost, such as a 480-V bus, the "bus energized" light will go out on the combination operating panel in the control room, an annunciator window will light, and the sequence-of-events recorder will indicate which breaker(s) operated. Critical instrumentation, such as that for reactor water level and pressure, is maintained via uninterruptible supplies, which are fed from the same division battery. Each uninterruptible supply powers only one or, in a few cases, up to five instrument loops. These supplies are Class 1E and are not physically close to each other. Such critical instrumentation is redundant across divisions

c. If any dc power sources are lost, an alarm and annunciator indication will be initiated in the control room. In this case, sufficient instrumentation associated with systems in the opposite division will be available. In addition, critical instrumentation fed by the failed supply will be maintained, since such instruments are fed by small, qualified, uninterruptible supplies. The alternative source, as mentioned above, is the ac power source in the same division

d. If power to a small group of instruments is lost, through a failure of a distribution cabinet or an individual circuit, the operator will be readily aware that power has been lost. The indicating instrument will drop to zero; the coordinated manual control switch or pushbutton backlight for that instrument or function will go out. However, the system redundant to that which suffered the instrument power loss will be available to achieve cold shutdown. The instrumentation for that system is powered from a totally separate source.

8.3.1.3 Conformance To Appropriate Quality Assurance Standards

The Quality Assurance Program covering design, fabrication, testing, purchase, and shipment of equipment for safety-related systems is discussed in Section 17.1. Quality Assurance procedures to implement the requirements of IEEE 336-1971 (Regulatory Guide 1.30) are used during installation, inspection, and testing of electrical equipment.

8.3.1.4 Independence of Redundant Systems

8.3.1.4.1 System Independence

The cabling criteria for Fermi 2 are established to afford complete independence of redundant safety systems as well as maximum reliability within each safety system. Guidelines for the cabling criteria follow the general criteria for electrical equipment described in Subsection 3.12.3.

The independence of safety systems is achieved primarily by the physical layout of the plant itself. Class 1E electrical equipment is totally redundant. In addition to the general separation achieved by the plant layout, definite separation requirements are imposed between equipment and cables of redundant divisions. Cables for redundant channels of the RPS and ESF are so arranged and installed that no single credible event could cause damage to more than one of the redundant systems. The systems are so designed that the occurrence of such an event on one system can in no way affect the other system.

For trays or conduits crossing a single insulated process steam line, a minimum separation of 12 in. is required. Crossing multiple insulated steam lines or running parallel to a single insulated steam line is avoided. However, if not avoidable, a 4-ft separation is required. Deviations from this criterion are evaluated and resolved on a case-by-case basis.

Non-Class 1E systems do not degrade the separation between redundant systems. In the case where separation distances are compromised by non-Class 1E cable trays, a fire-resistant barrier is used. Barrier use in these cases conforms to the redundant separation requirements.

Protective measures for cables required to meet the identified safe-shutdown path in the fire-protection analysis in Appendix 9A are applied as indicated in that section.

Routing of RPS or ESF control or power cables is avoided through rooms or spaces where there is a potential for the accumulation of large quantities (gallons) of oil or other combustible fluids through leakage or rupture of lube oil or cooling systems. Where such routing is unavoidable, only one division of RPS or ESF cables is allowed.

In the RHR complex, there is no separate BOP cable tray system. The BOP cables on the south side of the building centerline are routed as ESF, Division I; those on the north side are routed as ESF, Division II. This means that no BOP cables can cross safety system divisions, thereby ensuring complete isolation and independence of the redundant safety systems.

In addition to the separation of cables for redundant safety systems, physical separation is provided between cables classified as power, control, and instrument. Each is run in a separate tray system. The definition of each type of cable is as follows:

a. Power cables – Power cables, as described, generally fall into two voltage levels of 600-V and 5000-V insulation. These are the cables that provide electrical energy for motive power or heating to all 4160-V ac, 480-V ac, 208-V ac, and 260-V dc auxiliaries. Cables used to provide electrical energy to switchgear, MCC, and distribution panels also fall into this category. Lighting power and 260-V dc are not run in the cable tray, but in separate trays or conduits

b. Control cables – Control cables are those cables that provide 120 V ac and 125 V dc, for components which affect the automatic or manual control of auxiliary equipment or the 24 V dc for annunciators which provide alarms for indication of the state of those auxiliary components

c. Instrument cables – Instrument cables are those low voltage or low-current cables that carry signals from such analog devices as thermocouples, resistance temperature detectors, transducers, pneumatic-to-electric converters, or low-level digital signals. They generally are sized 16 AWG or smaller. The instrument cables also include the fiber optic cables that carry light pulses rather than current or voltage.

Cable tray design is such that, where practical, the trays containing power cables are the highest level in stacked trays.

In some cases, cables for small 460-V motors may contain both the power and the control for those motors. These cables are routed with other control cables in control cable trays.

Instrumentation cables are installed in separate conduit or in separate nonventilated solid trays with covers to provide electromagnetic shielding. In general, instrument trays occupy the lowest of a stack of cable trays.

The minimum vertical distance between stacked trays of the same safety-related system or between stacked trays of a non-safety-related system is 1 ft from the bottom of the upper tray to the top rail of the lower tray. This provides accessibility to the tray for adding or replacing cables.

Separation of redundant safety systems and power, control, and instrument cables of the same safety or nonsafety systems extend through the primary containment penetrations.

Penetrations are grouped in two separate areas, one to the north and one to the south of the reactor centerline. Penetrations for the divisions of ESF, RPS, and NMS are separated into the two areas by division. Penetrations are divided by division and by class of service as follows:

	Division I	Division II	BOP
5 kV power			6*
480V power	1	1	
120V control	2	2	
Control rod drive			6*
Thermocouple			2*
Low level signal			2
RPS	1	1	
NMS	2	2	

* Half of these penetrations are located in each divisional area.

8.3.1.4.2 Cable Reliability

All safety related cables and balance of plant cables routed in cable trays utilize materials that are designed to meet the electrical requirements of IEEE/ICC/WG-12-32 after being subjected to 1.8 x 10^8 rads gamma integrated over a 40-year period. In addition, a fire test was conducted for all cables 14 AWG and larger and a fire retardancy test for cables 16 AWG and smaller. Refer to Section 9A.5.d.3(f) for a description of tests on cables 14 AWG and larger. Temperature and humidity tests were conducted to meet the LOCA BWR requirements, as detailed in Section 3.11.

Cables not subject to these requirements are routed in enclosed raceway (except as otherwise noted) and are as follows:

a. BOP medium voltage underground cables

b. Lighting cables

c. Communication cables (i.e., computers, telephone, data, etc.) will be routed in enclosed raceways unless otherwise approved by engineering.

d. Security system cables

e. BOP vendor supplied wiring and their replacements

f. Internal panel wiring in the control center (not subject to the radiation resistance requirements only)

8.3.1.4.2.1 Ampacities

Power cable values are sized according to criteria mentioned in ICEA Pub. No. P-54-440-1975 for cables in open-top trays and ICEA Pub. No. P-46-426 for cables in conduits and underground ducts. Sizing of cables is controlled via design instructions and engineering calculations in the design process. Ampacities for cables outside the drywell are based on a conductor temperature of 90°C and air ambient temperature of 40°C. To correct for cable diameters, a diameter correction mentioned in the ICEA publication was applied.

Power cables installed inside the drywell are sized at 65°C (149°F) air ambient with the exception of cables used only during cold shutdown where 40°C (104°F) air ambient may be utilized and cables in certain areas inside the drywell where the temperature exceeds 65°C (149ºF). Cables installed in operating environmental conditions above 65°C (149°F) were evaluated. The ampacity tables for 65°C (149°F) were obtained by applying a temperature correction to the cable ampacities at 40°C. The temperature correction formula was obtained from ICEA Pub. No. P-46-426.

Power cable values are selected on the basis of 115 percent bus load amps for bus feeder cables and 125 percent full load amps for cables feeding motors, heaters, etc. These values can be overruled by engineering dispositions.

8.3.1.4.2.2 Fire Protection of Cables

Cables are fabricated with tested, fire-resistant insulating and jacketing materials. Flame tests were conducted by the selected cable vendors with the results certified and submitted to

Edison. Cable types were not accepted unless it was proven that a self-sustaining propagating fire did not result under rigid test conditions.

Fire stops are installed in all horizontal and vertical cable tray penetrations through walls and floors except for a few select wall penetrations identified as required for pressure venting from a postulated high-energy pipe break. The high-energy pipe break venting paths are identified in Subsection 3.6.2. For cable tray penetrations that are not fire stopped, fire breaks are provided that do not affect vent area requirements. Walls identified as fire walls are not used for pressure relief and all electrical tray penetrations are fire stopped. Fire breaks have not been added along horizontal and vertical tray runs because of division of the plant into fire zones and the use of cable that was tested and purchased to be nonpropagating.

Although tray penetrations are generally used for convenience where the maintenance of a pressure differential between areas is not required, fire stops are nevertheless provided to prevent the spread of fire from one area to another. Part of the opening provided is taken up by the barrier designed in accordance with the wall structure itself. Derating effects of cable capacity are considered when establishing the depth of the fire-resistant fill in the penetration. When penetrating a floor, the tray section is completely enclosed for a distance of 8 ft above the floor surface.

Cable tray penetrations through secondary containment will be fire stopped and sealed with either the multicable transit manufactured by Nelson Electric Company or an approved silicone foam fire stop.

The multicable transit consists of a steel rectangular frame through which the cables are pulled. The spaces inside the frame around the cable are packed with elastomer inserts of a proprietary formulation. The entire assembly has been fire tested to UL 263 followed by a hose stream test as specified in UL 10B. UL rates the transits for Classification and Follow-up Services of Underwriters Laboratories, Inc., and allows it to be marked:

Underwriters Laboratories, Inc.

Classified

Wall Opening Protective

Multi-Cable Device

Fire Rating: 3 hr minimum

The other cable tray fire penetrations will be sealed using a fire stop made of

a. Dow-Corning Q3-6548 Silicone RTV Foam, or

b. Other material to achieve an ANI approved 3-hr barrier.

At the designated safety-related fire barriers, Edison has provided 3-hr-rated penetration fire stops, tested and qualified in accordance with the NELPIA/MAERP (ANI) standard method of cable and pipe penetration fire stops. The thickness is adequate to meet the test requirements of ASTM E-119. Fire stops at walls not rated as fire barriers are rated for 30 minutes.

If it becomes necessary to breach or repair a completed fire stop, the silicone foam fire stops can be repaired using silicone foam repair procedures and controls.

Edison recognizes the need for periodic surveillance. These surveillances determine the condition of the fire stops and seals and will be conducted in accordance with the Technical Specifications requirements.

Holes and other voids in sleeve penetrations through floors to switchgear, MCCs, and other panels are plugged with a suitable fire-resistant material. In areas of high cable concentration, such as a cable spreading room, smoke-detection devices are provided. The design and configuration of the area determines the actual location of the devices.

The QA procedures to be used to verify that penetration fire stops and seals have been properly installed include

a. Verification by QC personnel that fire stops and seals are made of the specified materials

b. Monitoring of installation by QC personnel (using inspection procedures and checklists) to ensure compliance with identified design requirements.

8.3.1.4.2.3 Environmental Effect on Cables

Cable materials are evaluated for the effects of environmental conditions. Cable insulation temperature ratings consider the effects of ambient temperature and ohmic heat resulting from loads on the cable.

Where possible, adverse environmental effects are reduced by restricting cable passage through affected areas. However, cables within areas such as the primary containment are subjected to small pressure variations and radiation levels over the 40-year operational life of the plant, possibly at normal operating temperature conditions that may exceed the design rating of the cable insulation. The effect of these ambient temperatures on the service life of the cable are evaluated.

An additional requirement of these cables is to operate satisfactorily in the environment during and after the design-basis accident (DBA) outlined in Section 3.11 and Table 3.11-3. Throughout the period indicated, the cables may be subjected to a relative humidity of 100 percent as well as to the temperatures and pressures outlined in Table 3.11-3. The cable manufacturers are required to test samples of cable to demonstrate that they can withstand the conditions of the DBA defined in Section 3.11, and so certify.

8.3.1.4.3 Cable Trays

NOTE: Reduced design loadings for hangers were specified as a result of reverification of hanger loading and design.

The power and control cable trays are prefabricated sheet metal structures consisting of longitudinal channel side rails connected by transverse hat section members spaced on 9-in. centers. Hanger loading is limited to the reduced design loading (cable and tray weight plus firewrap load, tray cover load, and side rail weight). During initial design, the cable trays within the relay room, cable spreading room, and directly below the relay room floor were designed to withstand a dead weight loading of 50 lb./ft.^{2} , in addition to 200-lb. live load anywhere along the 8 foot maximum tray span, with a two-to-one safety factor. All other trays were designed to withstand a dead weight loading of 40 lb./ft.^{2} in addition to the live

load with the same safety factor. In cases where a reduced design loading for a hanger was specified, cable trays were designed for such reduced load. An on-going program was later established to monitor the actual weight of cables in the trays and to account for fire wrap, conduit, and air drop loads. Cable tray design load is adjusted to reflect these actual loads. For the trays in the drywell, a concentrated live load of 250 lb was specified. In the design specification for cable trays, deadweight loading did not include the weight of fire wrap material or any other attachments, such as top hat covers, that were subsequently added. Accordingly, hanger modifications were made where necessary, and the structural adequacy of the cable trays was reverified.

Instrument cables are installed in nonventilated solid metal trays with covers to provide adequate electromagnetic and electrostatic shielding. Ladder-type sections are used in the relay room over the cabinets where cable dropouts are required.

All cable tray hangers for RPS and ESF circuits are of Category I design. The trays are adequately supported and braced to withstand maximum horizontal and vertical forces. The transition tray sections are structurally connected to form a tray system.

Tray fills in both the control and instrumentation tray systems are initially limited by a computer program to 60 percent fill by cross-sectional area, but they may exceed 60 percent fill by specific instruction to the computer detailing the route to be taken. No control or instrumentation tray is permitted to exceed the deadweight loading limit of its hangers.

Tray fills in the power cable tray systems are initially limited to 47.1 percent fill by cross-sectional area. This value is equivalent to 3 in. of calculated depth, where depth is calculated according to the formula given in the ICEA-NEMA Standard Ampacity for Cables in Open Top Trays (ICEA P54-440, NEMA WC51-1975). Power trays may exceed 47.1 percent fill by specific instruction to the computer detailing the tray route to be taken.

Power trays that exceed 47.1 percent calculated fill are reviewed to verify that the temperature ratings of the cables are not exceeded. The temperature ratings of safety related cables are not exceeded in power trays greater than 47.1% fill. No power tray is permitted to exceed the deadweight loading limit of its hangers.

8.3.1.5 Physical Identification of Safety-Related Equipment

All safety-related equipment is identified using a color and/or numbering scheme that is both permanent and conspicuous. The purpose of the numerical and color-coding of cable conduits and trays is to uniquely define each cable and routing as to voltage level, service, and channel where appropriate. This provides a sure system for ascertaining the proper installation of each cable. Details of the numbering and color-coding schemes are in the following subsections.

8.3.1.5.1 Cable Identification

Cables are assigned an alphanumeric code number that is used for the purpose of identification. This number denotes the equipment category and tray system to which the cable is assigned. A permanent cable identification tag that indicates the cable number and segregation code plainly and legibly is affixed to each end of the cable. The number also appears on any wiring drawing, intercabling diagram, or plan electrical (electrical

installation) drawing on which the cable appears. Cables are color coded in accordance with plant specifications. Cables belonging to ESF Division I have orange jackets; cables belonging to ESF Division II have blue jackets. Cables which are pulled QA 1 with a black jacket are required to have the cable jacket re-identified (phase taped) per plant specifications. Also, in cases where divisional color jacketed cable have been pulled BOP, cable jacket re-identification (phase taping) is required per plant specification. In general, the BOP cables have black jackets except for certain cases, described in plant specifications. Black-, neutral-, and magenta-colored jacket cables are installed in divisional trays in a limited number of cases due to lack of cables having proper jacket colors in that size (e.g., the coaxial cables with a black or magenta jacket and thermocouple leads with a clear neutral jacket to expose the underlying tracers).

8.3.1.5.2 Cable Tray and Conduit Identification

Each cable tray has an alphanumeric identification number applied to its side at 25-ft intervals and at room entrances. This identification reflects the classification, power level, and channel of the tray section and is so coded. The ESF trays are color-coded orange and blue by division every 25 ft. The ESF cables are installed only in tray sections or conduits with a code identical to the code assigned to each cable. The BOP cables, except those in the RHR complex, which are treated (though not identified) as ESF cables, are routed only in BOP-coded cable trays.

Conduits installed for ESF and RPS cables are also assigned number codes that show cable routing. These number codes are affixed to the conduit at appropriate locations, and are color-coded to denote safety function. The RPS and NMS conduits will be uniquely color coded.

8.3.2 DC Power Systems

8.3.2.1 Description

8.3.2.1.1 General

The dc power system consists of two independent Class 1E battery systems, one system per division. Each system supplies dc power at 260 V dc and 130 V dc.

There is also a 260/130-V dc BOP system serving BOP loads. Further, each high-voltage switchyard has its own independent source of dc power for circuit breaker control. There are two batteries and chargers in the 345-kV switchyard and one battery and charger in the 120-kV switchyard.

Certain positions on the ESF 480-V buses supply non-safety-related loads. The control logic power for these positions as well as the safety-related positions is supplied by the Class 1E battery systems. Non-safety-related dc power loads, such as emergency oil pumps, are normally supplied by the BOP battery system. Where non-safety-related power loads exist on the Class 1E battery systems, a Class 1E isolation device will disconnect the non-safety-related load from the Class 1E battery system on receipt of a LOCA signal.

The ESF and BOP systems are protected from voltage variation by an undervoltage and two overvoltage circuits at the charger. One overvoltage circuit deactivates the rectifier bridge when the voltage exceeds 139.5 V for BOP and 138.5 V for Div I and II, while the other alarms to the main control room any voltage surpassing 136 V for BOP and 134 V for Div. I and II. The undervoltage relay alarms in the main control room if the voltage at the main distribution panel drops below 128.5 V for BOP and 124.2 V for Div. I and II.

8.3.2.1.2 260/l30-V DC Class 1E Power System

Two center-tapped 260-V batteries are provided for Class 1E loads. They are designated as 2PA for Division I and 2PB for Division II, and are shown in Figure 8.3-9. The batteries are located in separate rooms in the auxiliary building. The chargers and related equipment for the Class 1E batteries are located outside the battery rooms, in accordance with the separation criteria required for redundant systems.

Each 260-V battery is divided into two 130-V batteries connected in series. Each l30-V battery section has an adequately sized battery charger. These chargers are connected in parallel through fusing to their respective battery. For each 260-V battery, a 130-V spare battery charger is provided that can replace either of the normal 130-V connected chargers. The replacement can be made manually when it has been verified that the charger is connected to the proper 130-V battery, as shown in Figure 8.3-9. Each division's two 130-V batteries and their chargers are the source of dc control power for that respective division.

To maximize the reliability of system control power, the following philosophy is applied:

a. Control power for each of the two load groups within a division is supplied from a separate 130-V dc section of that division's battery

b. Power for control of each division's two diesel generators and their associated switchgear is supplied from the 130-V dc battery section supplied from their respective load group.

The 260-V sources furnish power for the dc motors necessary during shutdown conditions. For 260-V use, the battery is connected directly to dc MCCs through adequate fusing. The two center-tapped 260-V batteries 2PA and 2PB (identical) are redundant and separated according to IEEE Standard 308-1971 and General Design Criterion 17.

The loads supplied from the ESF batteries are shown in Table 8.3-15.

8.3.2.1.3 48/24-V DC Power System

8.3.2.1.3.1 Introduction

A reliable source of isolated low-voltage dc energy must be available to provide power for neutron monitoring instrumentation. The system is designed to be free of electrical noise, and is reliable in that the loads that are the most needed have the highest probability of being served. A failure in any part of the system is isolated so that it does not disable the entire system. The 48/24-V dc system is not required to be Class 1E, but because of physical relationships with the 260/130-V Class 1E batteries, they are Seismic Category II/I.

Figure 8.3-10 shows a one-line diagram of the 48/24-V dc system required to operate the various monitoring instruments. One 48/24-V battery, center tapped with the tap grounded at the instrument ground system, is supplied for each of the two systems. The batteries, designated 2IA and 2IB, are redundant. The batteries are located in the same rooms with the 260/130-V Class 1E batteries as follows: battery 2IA with 2PA and 2IB with 2PB. Each 48-V dc source is provided from two 24-V batteries connected in series charged by two 24-V chargers.

There is a main distribution panel with three buses: positive, neutral, and negative. The neutral bus is grounded to the instrument ground bus. Two 24-V series connected batteries and chargers are connected in parallel to these buses.

Each system has a +24-V dc and a -24-V dc battery charger connected in series with a common ground. The primary source of power is from the battery chargers, with the batteries serving as a backup source of power. A fifth charger that can replace any of the four normal chargers is supplied.

The 24-V dc power system supplies power for all 24-V dc requirements through the use of two independent systems. The systems, identified as system A and system B, are described in Subsections 8.3.2.1.3.2 and 8.3.2.1.3.3.

8.3.2.1.3.2 System A

System A furnishes power to the following instruments:

a. Source range monitor units

b. Trip auxiliary unit--source range

c. Intermediate range monitor units

d. Trip auxiliary units--intermediate range

e. Process radiation monitor units--stack gas

f. Trip auxiliary unit--air ejector offgas

g. Linear amplifier unit--air ejector offgas

h. Miscellaneous instrument loops.

System A has as its primary sources of power a positive (+ to N) 24-V battery charger identified as battery charger 2IA-1, and a negative (N to -) 24-V battery charger identified as battery charger 2IA-2. The primary sources have as a backup a positive (+ to N) 24-V battery, and a negative (N to -) 24-V battery.

The system is protected from voltage variation by one under-voltage circuit and two overvoltage circuits at the charger. One overvoltage circuit opens the charger dc circuit breaker when the voltage exceeds 28.5 V, while the other alarms to the main control room any voltage surpassing 26.9 V. The undervoltage relay alarms to the main control room if the voltage drops below 25 V.

This circuit monitors both the plus and minus sides of the system. A loss of power from the battery chargers does not interrupt service. A loss of ac feed to the battery chargers will also alarm in the control room.

8.3.2.1.3.3 System B

System B furnishes power to the following instruments:

a. Source range monitor units
b. Trip auxiliary unit--source range monitor
c. Intermediate range monitor units
d. Trip auxiliary units--intermediate range monitor
e. Process radiation monitor unit--reactor building closed loop cooling water
f. Process radiation monitor unit--reactor building service water effluent
g. Process radiation monitor unit--radwaste effluent.
h. Miscellaneous instrument loops.

System B also has as its primary sources of power a positive (+ to N) 24-V battery charger identified as battery charger 2IB-1, and a negative (N to -) 24-V battery charger identified as battery charger 2IB-2. The primary sources have as a backup a positive (+ to N) 24-V battery and a negative (N to -) 24-V battery.

The protection and test facilities for system B are the same as those for system A.

The battery chargers are of the full-wave silicon-rectifier type. They are capable of working independently since loads are different on the positive and negative buses.

8.3.2.1.4 Maintenance and Testing

The plant batteries and other equipment associated with the dc system are easily accessible for inspection and testing. Service and testing are accomplished on a routine basis in accordance with recommendations of the manufacturer and requirements of IEEE 450-1972. Typical inspections include visual inspections for leaks and corrosion and the testing of all batteries for voltage, specific gravity, and level of electrolyte. Battery testing will be performed at least once per 18 months to ensure the capacity as described in Section 8.3.2.2.2 is satisfied.

8.3.2.1.5 Balance-of-Plant 260/l30-V DC System

One 260/130-V battery designated 2PC is provided for BOP systems and is located in the radwaste building. There are two dc MCCs fed in parallel from battery 2PC. The 2PC battery system is shown in Figure 8.3-11.

8.3.2.2 Analysis

8.3.2.2.1 Safety Design Basis

The plant safety battery system is a Class 1E system and consists of two 260/130-V dc control and power batteries. Each battery is of adequate size to safeguard the plant until ac power sources are restored. Each battery has its own charger, which is sized to recharge the

battery after discharge while carrying its steadystate load within a time compatible with the recommendations of the battery manufacturer. One standby charger is provided for each of the two 260/130-V dc power batteries. The plant safety battery system is arranged so that no single circuit component failure prevents the system from providing power to vital loads. Feeds for the chargers are from critical buses and redundancy is maintained.

The existing 345-kV switchyard is provided with two separate control batteries that also have separate chargers. The 120-kV switchyard has its own battery, normal charger, and spare charger.

8.3.2.2.2 Capacity

Design calculations determined safety related battery capacity by developing load versus time plots of dc power demand for accident and safe- shutdown conditions. The safety related battery capacity was then chosen such that under the worst-case condition with no chargers available, the batteries are able to carry all required loads for 4 hours without battery voltage dropping below the minimum voltage necessary to operate the respective components as designated within the applicable design calculation requirements and component voltage acceptance criteria.

The required safety related 130 V batteries are demonstrated operable at least once per 18 months by verifying that either:

a. The battery capacity is adequate to supply and maintain in operable status all of the actual emergency loads for the design duty cycle (4 hr) when the battery is subject to a battery service test, or

b. The battery capacity is adequate to supply a dummy load for a profile as described within the applicable design calculation while maintaining the battery terminal voltage greater than or equal to the minimum voltage necessary to operate the bounding component as designated within the applicable design calculation requirements.

Design calculations determined BOP battery capacity by developing load versus time plots of dc power demand for station blackout (SBO) and Appendix R dedicated shutdown conditions. The BOP battery capacity was then chosen such that under the worst-case condition with no chargers available, the batteries are able to carry all required loads for 1.5 hours without battery voltage dropping below the minimum voltage necessary to operate the respective components as designated within the applicable design calculation requirements and component voltage acceptance criteria.

The required BOP 130 V batteries are demonstrated operable at least once per 60 months by verifying that the battery capacity is adequate to supply and maintain in operable status all of the actual emergency loads, or an equivalent dummy load, for the design duty cycle (1.5 hr) when the battery is subject to a battery service test.

The chargers were sized so that any charger is able to recharge a totally discharged battery in 24 hr while supplying maximum predicted load.

8.3.2.2.3 Compliance With Design Criteria

The description in the previous subsections and the dc system shown in Figures 8.3-9 and 8.3-10 demonstrate the compliance of this design with all Regulatory Guides and General Design Criteria, as well as with all other applicable design criteria and standards including IEEE 308-1971.

8.3.2.2.4 Safety Evaluation

Each safety related 130-V battery in a division has one designated charger fed on the ac side from an MCC of the same division. One 130-V spare charger is provided per division and is also fed on the ac side from another MCC of the same division.

There are two redundant power and control dc systems for ESF loads. The safety related divisional ESF batteries are of the same size, capable of carrying the load for 4 hr without chargers, although it is highly improbable not to have either offsite or onsite power available.

In case of a safety related charger failure, the spare charger is employed manually.

The safety related batteries are permanently in service and working while the power plant is operating; therefore, any failures are detected and resolved during normal operation.

The two divisions are totally independent as far as ac feeds for the battery chargers, the batteries, and their distribution systems.

The Float and Equalize voltages for the respective Division 1 and 2 batteries are as maintained within the applicable design calculation requirements. The Battery (Final) Discharge voltages are maintained at the minimum voltage necessary to operate the respective components as designated within the applicable design calculation requirements and component voltage acceptance criteria.

Each BOP 130-V battery has one designated charger fed on the ac side from a BOP MCC. One BOP 130-V spare charger is provided and is also fed on the ac side from another BOP MCC. The BOP batteries are of the same size, capable of carrying the load for 1.5 hr without chargers, although it is highly improbable not to have either offsite or onsite power available. In case of a BOP charger failure, the spare charger is employed manually. The BOP batteries are permanently in service and working while the power plant is operating; therefore, any failures are detected and resolved during normal operation.

There is no battery control from the main control room; however, the following abnormal conditions are alarmed or recorded in the main control room:

	DC system alarms
DIV. I	Battery 2A-1 charger (ac power failure) Battery 2A-2 charger (ac power failure) Battery 2A-1 high voltage Battery 2A-2 high voltage Battery 2A-1 low voltage Battery 2A-2 low voltage
DIV. II	Battery 2B-1 charger (ac power failure) Battery 2B-2 charger (ac power failure) Battery 2B-1 high voltage Battery 2B-2 high voltage Battery 2B-1 low voltage Battery 2B-2 low voltage
BOP	Battery 2C-1 charger (ac power failure) Battery 2C-2 charger (ac power failure) Battery 2C-1 high voltage Battery 2C-2 high voltage Battery 2C-1 low voltage Battery 2C-2 low voltage
48/24V	Battery 2IA 24V battery A1 charger (ac power failure) 24V battery A2 charger (ac power failure) Battery 2IA high voltage Battery 2IA low voltage
48/24V	Battery 2IB 24V battery B1 charger (ac power failure) 24V battery B2 charger (ac power failure) Battery 2IB high voltage Battery 2IB low voltage.

8.3 ONSITE POWER SYSTEMS

REFERENCES

1. Final Report, Starting and Load Acceptance Reliability Test, September 25 through October 3, 1968, Colt Industries, Fairbanks-Morse, Inc., Power System Division.
2. IEEE Conference Paper 69 CP 177-PWR, Fast Starting Diesel Generator for Nuclear Plant Protection, presented at the 1969 IEEE Winter Power Meeting, Power Generation Committee, New York City, New York, January 26-31, 1969.

TABLE 8.3-1 HAS BEEN INTENTIONALLY DELETED

TABLE 8.3-2 EMERGENCY DIESEL GENERATOR SYSTEM DIVISIONAL CONNECTED LOADS

RHR PUMPS DATA

CONDITION	FLOW (GPM)	BHP	MOTOR EFF.	HP INPUT	KW INPUT
A	15,200	2,100	93.0%	2,260	1,688
B	11,000	1,900	93.0%	2,045	1,527

CORE SPRAY PUMPS DATA

CONDITION	FLOW (GPM)	BHP	MOTOR EFF.	HP INPUT	KW INPUT
A	3,250	670	93.0%	720	536
B	4,000	750	93.5%	802	600

RHR Pump

Conditions

A	Four pumps pumping into both loops with one loop broken (single failure)
B	Shutdown cooling after blowdown to main condenser

Core Spray

Conditions

A	Paired Pump rated
B	Paired Pump runout

Typical loads energized on EDGs

Motor operated Valves	Control Center Air Conditioning
Instrumentation	EDG Auxiliaries and RHR EFS Loads
Drywell Cooling Fans	Auxiliary Building Ventilation
Standby Gas Treatment System	Emergency Lighting – Control Room
EECW and EESW Systems	Security Lighting
Control Center Ventilation Systems	RHR Service Water Pumps*
ECCS Room Coolers	Cooling Tower Fans: High Speed/Low Speed*
Auxiliary Building Cooling	Power Control Battery Charger*
Control Air Compressor/Dryer	Post LOCA Combustible Gas Control System*
	Emergency Lighting – Remaining*

* Loads the operators would normally expect to add to the EDGs through manual operation for extended shutdown cooling.

Other manual loads can be added by the operator if capacity of respective EDG is available.

TABLE 8.3-3 EMERGENCY DIESEL GENERATOR SYSTEM: LOSS OF POWER, EMERGENCY SHUTDOWN AT ZERO TO TEN MINUTES

LOCA Load (0-10 Minutes)

EDG	Total Load (kW)	Total Rotating Load (kW)	Load Increase Due to Max Freq (kW)	Total EDG Loading (kW)	Rating (kW)	EDG Margin (kW)
11	2587	2444	82	2669	3135	466
12	2882	2666	89	2971	3135	164
13	2501	2441	82	2583	3135	552
14	2904	2671	89	2993	3135	142

TABLE 8.3-4 EMERGENCY DIESEL GENERATOR SYSTEM: LOSS OF OFFSITE POWER, EXTENDED SHUTDOWN AFTER TEN MINUTES

LOCA Load (10+ Minutes)

EDG	Total Load (kW)	Total Rotating Load (kW)	Load Increase Due to Max Freq (kW)	Total EDG Loading (kW)	Rating (kW)	EDG Margin (kW)
11	2742	2585	87	2829	2850	21
12	1810	1531	51	1861	2850	989
13	2632	2584	87	2719	2850	131
14	1650	1393	47	1697	2850	1153

LOOP Load (No LOCA)

EDG	Total Load (kW)	Total Rotating Load (kW)	Load Increase Due to Max Freq (kW)	Total EDG Loading (kW)	Rating (kW)	EDG Margin (kW)
11	2333	2176	73	2406	2850	444
12	1048	820	27	1075	2850	1775
13	2225	2176	73	2298	2850	552
14	1093	842	28	1121	2850	1729

TABLE 8.3-5 EMERGENCY DIESEL GENERATOR LOADING SEQUENCE: LOSS-OF-COOLANT ACCIDENT AND LOSS OF OFFSITE POWER (DIVISION I EDGS 11, 12) (DIVISION II EDGS 13, 14)

Time (sec) Overall	EDG	EDG 11 (13)	EDG 12 (14)
0	-	Accident occurs	Accident occurs
3	-	Diesel starts	Diesel starts
13	-	Rated speed and voltage	Rated speed and voltage
13	0	EDG breaker closes	EDG breaker closes
13	0	Auxiliary 480-V transformers energized, instrumentation	Auxiliary 480-V transformers energized
13	0	RHR pumps and MOVs	RHR pumps and MOVs
18	5	Core spray pumps and MOVs	Core spray pumps and MOVs
18	5	Emergency lighting Main Control Room & Communication System Feed DIV I.	Emergency lighting Main Control Room & Communication System Feed DIV II.
28	15	Reactor drywell cooling fans	Reactor drywell cooling fans and SGTS
33	20	Battery room vent fans	EECW and service water
38	25	ECCS and auxiliary room cooling	ECCS and auxiliary room cooling
48	35	Air compressor and dryer	
58	45	EDG service water and auxiliaries	EDG service water and auxiliaries
68	55		Control center air conditioning fans and chiller*, control room recirculation emergency makeup fan

* Chiller compressor is a manually restored load.

TABLE 8.3-6 HAS BEEN DELETED

THIS PAGE INTENTIONALLY LEFT BLANK

TABLE 8.3-7 HAS BEEN DELETED

THIS PAGE INTENTIONALLY LEFT BLANK

TABLE 8.3-8 DIESEL RESPONSE TO LOADING[g]

	Minimum Voltage (percent)[a]			Minimum Frequency (percent)[c]		Recovery Time (sec)		
	Colt Program	Edison Program	Preop Test[b]	Colt Program	Preop Test[b]	Colt Program	Edison Program	Preop Test[b]
Starting of RHR pump (2000 hp)[h]	78 (69.4)[e]	72.5	69-73	95	90-95	3	2.75	4-5
Starting of CS pump (800 hp) with RHR pump operating	89 (87.2)[e]	87.9	89-91 (82.5)[f]	98	98-99 (96)[d]	7	6.97	5-7

[a] Minimum voltage specified in Regulatory Guide 1.9: 75 percent.

[b] Preoperational Test Results - Approximate range for the four EDGs. Minimum values are a deviation from the recommended values of Regulatory Guide 1.9, but are momentary. The preoperational test demonstrated the starting and load-accepting capabilities of the EDGs.

[c] Minimum frequency specified in Regulatory Guide 1.9: 95 percent.

[d] Value in parenthesis reflects EDG testing performed with Woodward 2301A based governor control system. Values that fell within existing ranges shown are bounded and do not indicate any new value.

[e] Value in parenthesis reflects Coltec Study for Basler series boost exciter, which is the current exciter in service. The value of 78 is maintained for historical purposes and is associated with the Portec shunt type static exciter.

[f] Value in parenthesis reflects testing performed with Basler series boost exciter.

[g] Regulatory guide 1.9, Rev. 2 section C.4 allows testing to justify and validate voltage and frequency dip levels below the stated nominal values as acceptable based on satisfactory motor starting.

[h] The two motors considered were the RHR pump motors (2000-hp motors for pumps A, B, and C and 2250-hp for pump D).

TABLE 8.3-9 OTHER PLANTS USING COLT EMERGENCY DIESEL GENERATORS

A.	1 unit	-	2665 kW for Northeast Utilities, Millstone Point Nuclear Plant No. 1
B.	2 units	-	2500 kW for Carolina Power & Light, Robinson Nuclear Plant
C.	2 units	-	3000 kW for Northern States Power, Prairie Island Nuclear Plant
D.	2 units	-	3000 kW for Vermont Yankee Corporation, Vermont, Yankee Nuclear Plant
E.	2 units	-	3000 kW for Metropolitan Edison, Three Mile Island Nuclear Plant No. 1
F.	4 units	-	3250 kW for Philadelphia Electric Company, Peachbottom Nuclear Station No. 2 and No. 3
G.	3 units	-	3250 kW for Baltimore Gas & Electric Company, Calvert Cliffs Nuclear Station Units No. 1 and No. 2
H.	2 units	-	3000 kW for Florida Power Corporation, Crystal River Nuclear Station
I.	2 units	-	3000 kW for Jersey Central Power & Light Company, Three Mile Island Nuclear Station No. 2
J.	3 units	-	3250 kW for Georgia Power Company, Hatch Nuclear Plant
K.	2 units	-	3250 kW for Iowa Electric Light and Power Company, Duane Arnold Nuclear Plant
L.	3 units	-	3000 kW for Virginia Electric & Power Company, North Anna Nuclear Plants No. 1 and No. 2
M.	2 units	-	3250 kW for Northeast Utilities, Millstone Point Nuclear Plant No. 2

TABLE 8.3-10 CONTROL FUNCTIONS OF EMERGENCY DIESEL GENERATOR LOCAL PANELS AND MAIN CONTROL ROOM CONTROLS

	Local EDG Panel	Engine Gage Board	Main Control Room
Speed selector switch (Rated/Idle)	X[b]	-	-
Local-remote selector	X	-	
Start switch	X	-	X
Stop switch	X	-	X
Voltage (Raise-Lower) control	X	-	X
Governor (Raise-Lower) control	X	-	X
Voltage regulator (Auto, Manual)	X	-	X
Synchroscope switch (Off, On)	X	-	X
Prelube pump switch (Off, On)	X		
4160-V circuit breaker (Open, Close, Trip)	X		
Coolant heater (Off, Auto)	-	X	
Coolant pump (Hand, Off, Auto)	-	X	
Lube-oil heater (Off, Auto)	-	X	
Lube-oil pump (Hand, Off, Auto)	-	X	
Generator space heater (Off, Auto)	-	X	
Fuel-oil standby pump (Hand, Off, Auto)	-	X	-
Fuel-oil transfer pump A (Off, Run)	X	-	X
Fuel-oil transfer pump B (Off, Run)	X	-	X
Diesel generator SW pump (Off, Run)	X	-	X
EDG trip reset	X		X
Fuel tank dump valves			X
DGSW discharge crosstie valve			X
480-V breaker control switches			X
4160-V breaker control switches			X
LOCA bypass switch			X
Exciter reset	X	-	X
Exciter bypass switch (normal, bypass)	X[(a)]		
Exciter emergency shutdown pushbutton	X		

[a] An emergency start of the EDG engine will occur with the exciter bypass switch in bypass, however the bypass position will prevent an auto or manual reset of the exciter.

[b] The EDG will auto-start on an emergency start signal with the switch in the "Idle" position. However, the engine will not accelerate automatically to the rated speed of 900 RPM.

TABLE 8.3-11 EMERGENCY DIESEL GENERATOR METERING

	Local EDG Panel	Engine Gage Board	Main Control Room
Synchroscope	X		X
kW	X		X
kVAR	X		X
Bus voltage	X		X
Generator voltage	X		X
Frequency	X		X
Armature amps	X		X
Field voltage, dc	X		X
Field amps, dc	X		X
Watthour meter	X		
DGSW flow			X
X-Y-Z phase amps			X
DG essential bus transformer current			X
Essential bus power on			X
480-V diesel bus volts			X

TABLE 8.3-12 EMERGENCY DIESEL GENERATOR CONTROL PANEL ALARMS AND TRIPS

	Emergency Mode		Test Mode	
Local Control Panel	Trip	Alarm	Trip	Alarm
Lube-oil temperature high		X	X	X
Lube-oil temperature low		X		X
Lube-oil pressure low[a]	X	X	X	X
Lube-oil sump level low		X		X
Jacket coolant temperature high		X	X	X
Jacket coolant temperature low		X		X
Jacket coolant pressure low		X	X	X
Jacket coolant level low		X	X	X
Crankcase pressure high[a]	X	X	X	X
Overspeed	X	X	X	X
Inlet air filter p high		X		X
Start failure	X	X	X	X
Start air pressure low		X		X
Local control		X		X
Switch not in auto position		X		X
Generator bearing temperature high		X		X
Overvoltage or ground fault		X	X	X
Field failure		X	X	X
Lube-oil tank level high or low		X		X
Fuel-oil day tank level low		X		X
EDG auto start		X		X
EDG out of service		X		X
Fuel-oil standby pump running		X		X
Fuel-oil pressure low		X	X	X
DGSW pump running[b]		(b)		
DGSW pump off[b]		(b)		
DGSW pump trip		X[b]		X[b]
Fuel-oil transfer pump A, run[b]		(b)		
Fuel-oil transfer pump A, off[b]		(b)		

TABLE 8.3-12 EMERGENCY DIESEL GENERATOR CONTROL PANEL ALARMS AND TRIPS

	Emergency Mode		Test Mode	
Local Control Panel	Trip	Alarm	Trip	Alarm
Fuel-oil transfer pump A, trip		X[b]		X[b]
Fuel-oil transfer pump B, run[b]		(b)		
Fuel-oil transfer pump B, off[b]		(b)		
Fuel-oil transfer pump B, trip		X[b]		X[b]
EDG differential trip	X	X[c]	X	X[c]
Exciter trip	X[d]	X[b]	X[e]	X[b]

[a] The crankcase overpressure and low lube-oil pressure sensors are connected in two-out-of-three logic.

[b] Panel light indication.

[c] Relay target indication.

[d] Exciter trips on EDG differential trip or exciter emergency shutdown push button in emergency mode.

[e] Under normal slow start operation, the exciter is tripped with the exciter bypass switch in the bypass position.

TABLE 8.3-13 EMERGENCY DIESEL GENERATOR ALARMS IN THE MAIN CONTROL ROOM

	Annunciator Alarm	Sequence Recorder
Lube-oil tank level high/low	X	X
Lube-oil temperature high/low	X	X
Lube-oil pressure low	X	X
DGSW pump auto start		X
DGSW pump low flow	X	X
Crankcase pressure high	X	X
Overspeed	X	X
Start failure	X	X
Starting air pressure low	X	X
Auto start	X	X
Generator trouble	X	X
Overvoltage/ground	X	X
Fuel-oil storage tank level high/low	X	X
Fuel-oil day tank level low	X	X
Fuel-oil pressure low	X	X
Jacket coolant trouble	X	X
Not ready for auto start	X	X
Exciter trip	X	X
In local control	X	X
Fuel-oil standby pump running	X	X
Not in auto position	X	X
Lube-oil sump level low	X	X
Inlet air filter ΔP high	X	X
Motor tripped	X	X
LOCA start defeated	X	X

TABLE 8.3-14 120V AC DISTRIBUTION PANEL

Distribution Cabinet: H21-P561 (Regulated)
Description: 120 VAC Distribution Panel (Division I)
MPU: 1 **Cabinet:** 2 **Circuit:** 1

Panel/Device	BRANCH Circuit	DESCRIPTION
P50P402A	1	Control Air Relay Cabinet

Distribution Cabinet: H21-P557 (Regulated)
Description: 120 VAC Distribution Panel (Division I)
MPU: 1 **Cabinet:** 2 **Circuit:** 2

Panel/Device	BRANCH Circuit	DESCRIPTION
D11P285	1	PRMS Control Center Emergency Air South Inlet Monitor Rack
H21P296A	1, 2, 4	CCHVAC Instrument Rack
D11P297	2	PRMS Control Center Emergency Air North Inlet Monitor Rack
H21P285A	3	CCHVAC Chiller Panel
H21P296C	5, 11	CCHVAC Automatic Temperature Control Panel
H21P527	6	General Supply Air System Control Panel
H21P528	7	General Exhaust Air System Control Panel

TABLE 8.3-14 120V AC DISTRIBUTION PANEL

Distribution Cabinet: H21-P559 (Regulated)
Description: 120 VAC Distribution Panel (Division I)
MPU: 1 **Cabinet:** 2 **Circuit:** 3

Panel/Device	BRANCH Circuit	DESCRIPTION
P44N417A	6	Valve Position Transmitter EECW Pump P4400C001A Discharge
P44N422A	7	Valve Position Transmitter EECW Heat Exchanger P4400B001A/P4400B001C
H21P282	8	Primary Containment H_2/O_2 Monitor Analyzer Cabinet
H21P328A	12	Drywell Cooling Fan Control Panel

Distribution Cabinet: H11-P901 (Regulated)
Description: 120 VAC Distribution Panel (Division I)
MPU: 1 **Cabinet:** 2 **Circuit:** 6

Panel/Device	BRANCH Circuit	DESCRIPTION
H11P626	2	Core Spray Cabinet
H11P617	3	RHR Relay Cabinet
H11P868	5	Termination Panel
H11P857	7, 10	Relay Cabinet
H11P622	9	Inboard Valve Relay Cabinet
H11P891	11	Termination Cabinet
H11P914	12, 18	Primary Containment Monitoring Equip & Misc. Relay Panel
H11P888	14	Termination Cabinet

TABLE 8.3-14 120V AC DISTRIBUTION PANEL

Distribution Cabinet: H11-P900 (Regulated)
Description: 120 VAC Distribution Panel (Division I)
MPU: 1 **Cabinet:** 3 **Circuit:** 1

Panel/Device	BRANCH Circuit	DESCRIPTION
H11P614	1	NSSS Temperature Recorder & Leak Detection Cabinet
H11P613	3, 4, 6, 10	NSSS Process Instrument Cabinet
H11P604	5	PRMS Instrument Rack
H11P869	9	System Service Control Term. Cabinet
H11P601	11	ECCS Combination Operating Panel
H21P521	13	SGT Ventilation Control Panel
H21P532	15	RHR Emergency Cooling Ventilation Panel
H21P534	16	Thermal Recombiner Ventilation Control Panel
H21P536	17	CS & HPCI Room Ventilation Control Panel
H21P590	18	RB HVAC Control Panel
H11P914	20	Primary Containment Monitoring Equip & Misc. Relay Panel

TABLE 8.3-14 120V AC DISTRIBUTION PANEL

Distribution Cabinet: H11-P902 (Un-Regulated*)*
Description: 120 VAC Distribution Panel (Division II)
MPU: 2 **Cabinet:** 1 **Circuit:** 6

Panel/Device	BRANCH Circuit	DESCRIPTION
H11P627	2	Core Spray Cabinet
H11P618	4	RHR Relay Cabinet
H11P870	5, 7, 15	Relay Panel
H11P855	8, 16	Termination Cabinet
H11P915	9, 21	Primary Containment Monitoring Equip & Misc. Relay Panel
H11P820	11	Termination Cabinet
H11P623	12	Outboard Valve Relay Panel
H11P853	14	Termination Cabinet

Distribution Cabinet: H21-P562 (Regulated*)*
Description: 120 VAC Distribution Panel (Division II)
MPU: 2 **Cabinet:** 2 **Circuit:** 1

Panel/Device	BRANCH Circuit	DESCRIPTION
P50P402B	1	Control Air Relay Cabinet

TABLE 8.3-14 120V AC DISTRIBUTION PANEL

Distribution Cabinet: H21-P558 (Regulated)
Description: 120 VAC Distribution Panel (Division II)
MPU: 2 **Cabinet:** 2 **Circuit:** 2

Panel	BRANCH Circuit	DESCRIPTION
D11P290	1	PRMS Control Center Emergency Air South Inlet Monitor Rack
H21P296B	1, 2, 4	CCHVAC Instrument Rack
D11P298	2	PRMS Control Center Emergency Air North Inlet Monitor Rack
H21P285B	3	Control Center AC Chiller Panel
H21P296D	5, 11	CCHVAC Automatic Temperature Control Panel
H21P527A	6	RB Supply Air System Control Panel
H21P529	7	General Exhaust Air System Control Panel

Distribution Cabinet: H21-P560 (Regulated)
Description: 120 VAC Distribution Panel (Division II)
MPU: 2 **Cabinet:** 2 **Circuit:** 3

Panel/Device	BRANCH Circuit	DESCRIPTION
P44N422B	5	Valve Position Transmitter EECW Heat Exchanger P4400B001B/P4400B001D
P44N417B	6	Valve Position Transmitter EECW Pump P4400C001B Discharge
H21P283	8	Primary Containment H_2/O_2 Monitor Analyzer Cabinet
H21P328B	11	Drywell Cooling Fan Control Panel

TABLE 8.3-14 120V AC DISTRIBUTION PANEL

Distribution Cabinet: H11-P903 (Regulated)
Description: 120 VAC Distribution Panel (Division II)
MPU: 2 **Cabinet:** 3 **Circuit:** 1

Panel	BRANCH Circuit	DESCRIPTION
H11P612	3, 11	NSSS Process Instrument Cabinet
H11P614	4	NSSS Temperature Monitoring & Leak Detection Panel
H11P620	5	Isolated Transmitter E41K822 for AOV E41F011
H11P602	9	ECCS Combination Operating Panel
H11P862	10	System Service Control Term Cabinet
H11P817	12	Drywell Cooling, SGTS HVAC Cabinet
H21P520	15	SGT Ventilation Control Panel
H21P533	17	RHR Emergency Cooling Ventilation Panel
H21P535	18	Thermal Recombiner Ventilation Control Panel
H21P537	19	CS & HPCI Room Ventilation Control Panel
H21P538	20	CS & HPCI Room Ventilation Control Panel
H21P591	21	EECW HVAC Panel
H11P915	22	Primary Containment Monitoring Equip & Misc. Relay Panel

TABLE 8.3-15 VITAL 260/130-VDC POWER SYSTEM POWER AND INSTRUMENTATION AND CONTROL

DIVISION I

Power MCC 2PA-1, 260VDC
RCIC Turb gland seal vacuum pump
RCIC Turb gland seal condensate pump
RCIC Motor-operated valves
Motor-operated isolation valves

Control 2PA2, 130VDC (+, N)
Switchgear, 4160V (64B, 11EA)
Switchgear, 480V (72B, 72EA)
Diesel control (EDG 11)
EDG 11 & 12 Auto Load Sequencer
Core Spray System Control (DIV I)
HPCI System Control (Bus A)
Auto depressurization system (Bus B)
Misc loads (recorders/indicators/solenoid operated valves/inverters/relays)

Control 2PA2, 130VDC (N, -)
Switchgear, 4160V (64C, 12EB)
Switchgear, 480V (72C, 72EB)
Diesel control (EDG 12)
RCIC System Control (Bus A)
RHR system control (DIV I)
Auto depressurization system (Bus A)
Misc loads (recorders/indicators/solenoid operated valves/inverters/relays)

DIVISION II

Power MCC 2PB-1, 260VDC
HPCI Turb gland seal vacuum pump
HPCI Turb gland seal condensate pump
HPCI Turb auxiliary oil pump
HPCI Motor-operated valves
Motor-operated isolation valves

Control 2PB2, 130VDC (+, N)
Switchgear, 4160V (65E, 13EC)
Switchgear, 480V (72E, 72EC)
Diesel control (EDG 13)
EDG 13 & 14 auto load sequencer
HPCI system control (Bus B)
Auto depressurization system (Bus B)
Misc loads (recorders/indicators/solenoid operated valves/inverters/relays)

TABLE 8.3-15 VITAL 260/130-VDC POWER SYSTEM POWER AND INSTRUMENTATION AND CONTROL

DIVISION II (continued)

Control 2PB2, 130VDC (N, -)	Horse Power
Switchgear 4160V (65F, 14ED)	-
Switchgear 480V (72F, 72ED)	-
Diesel control (EDG 14)	-
RCIC system control (Bus B)	-
RHR system control (DIV II)	-
Core spray system control (DIV II)	-
Auto depressurization system (Bus A)	-
Misc loads (recorders/indicators/solenoid operated valves/inverters/relays)	-

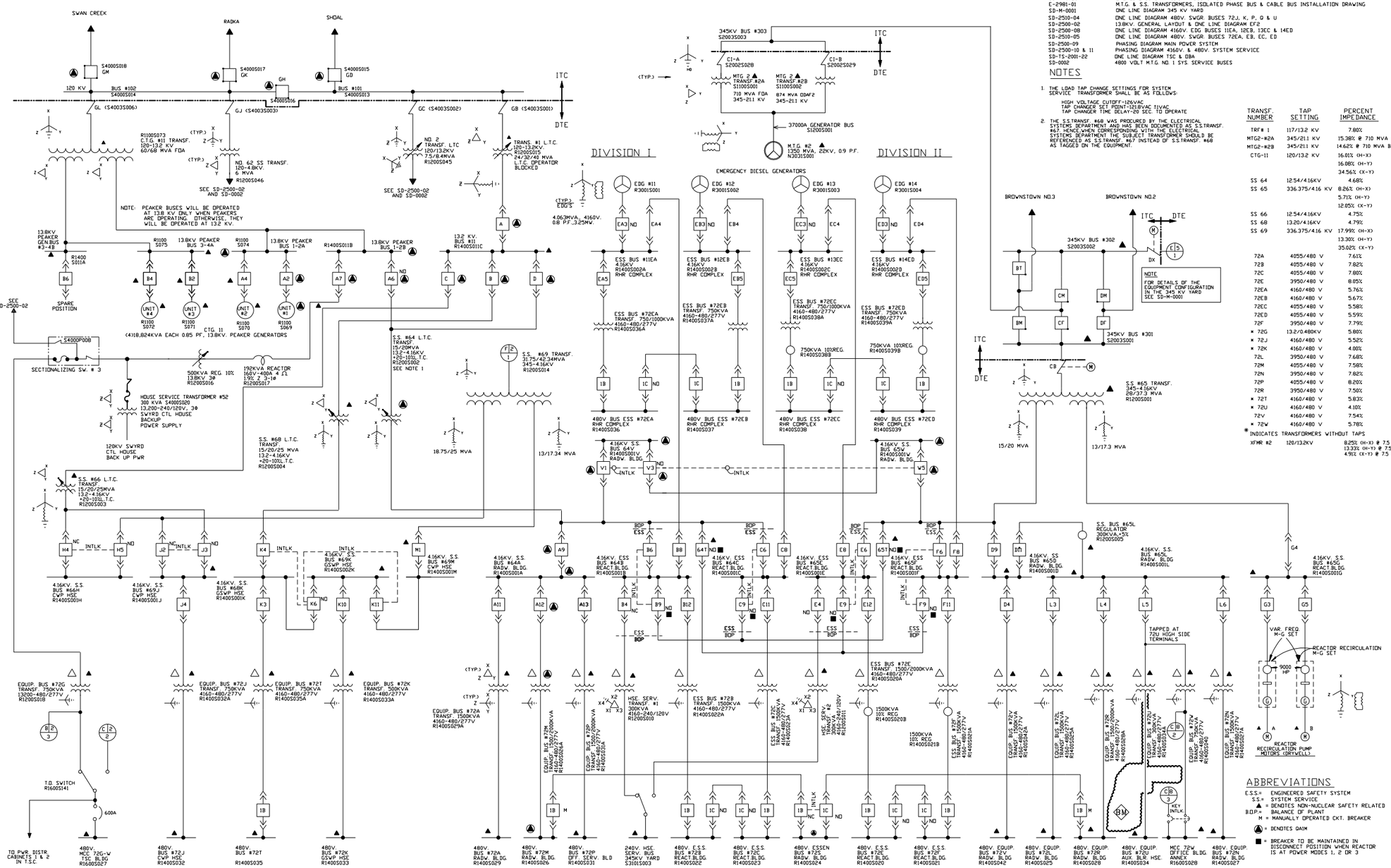

REFERENCE DRAWINGS

SD-2500-03 & 04	ONE LINE DIAGRAM 4160V. S.S. BUSES 64B & C, 65E, F & G REACTOR BUILDING
SD-2500-05	ONE LINE DIAGRAM 4160V. S.S. BUSES 64A, 65D, 65L, 64V, & 65W RADWASTE BUILDING
SD-2500-06	ONE LINE DIAGRAM 4160V. S.S. BUSES 66H, 68K, 69J, 69M & 69M PUMPHOUSES
SD-2510-01	ONE LINE DIAGRAM 480V. SWGR. E.S.F. BUSES 72B, C, E,& F REACTOR BUILDING
SD-2510-02	ONE LINE DIAGRAM 480V. SWGR. E.G. BUSES 72A, L, M & R RADWASTE BUILDING
SD-2510-03	ONE LINE DIAGRAM 480V. SWGR. BUSES 72N, S & V
SD-F-0023	ONE LINE DIAGRAM 13.8KV. BUS C.T.G. #11
E-2981-01	M.T.G. & S.S. TRANSFORMERS, ISOLATED PHASE BUS & CABLE BUS INSTALLATION DRAWING
SD-M-0001	ONE LINE DIAGRAM 345 KV YARD
SD-2510-04	ONE LINE DIAGRAM 480V. SWGR. BUSES 72J, K, P, Q & U
SD-2500-02	13.8KV. GENERAL LAYOUT & ONE LINE DIAGRAM EF2
SD-2500-08	ONE LINE DIAGRAM 4160V. EDG BUSES 11EA, 12EB, 13EC & 14ED
SD-2510-05	ONE LINE DIAGRAM 480V. SWGR. BUSES 72EA, EB, EC, ED
SD-2500-09	PHASING DIAGRAM MAIN POWER SYSTEM
SD-2500-10 & 11	PHASING DIAGRAM 4160V. & 480V. SYSTEM SERVICE
SD-TS-2001-22	ONE LINE DIAGRAM TSC & DBA
SD-0002	4800 VOLT M.T.G. NO. 1 SYS. SERVICE BUSES

NOTES

1. THE LOAD TAP CHANGE SETTINGS FOR SYSTEM SERVICE TRANSFORMER SHALL BE AS FOLLOWS:

   HIGH VOLTAGE CUTOFF-126VAC
   TAP CHANGER SET POINT-121.8VAC ±1VAC
   TAP CHANGER TIME DELAY-20 SEC. TO OPERATE

2. THE S.S.TRANSF. #68 WAS PROCURED BY THE ELECTRICAL SYSTEMS DEPARTMENT AND HAS BEEN DOCUMENTED AS S.S.TRANSF. #67. HENCE,WHEN CORRESPONDING WITH THE ELECTRICAL SYSTEMS DEPARTMENT THE SUBJECT TRANSFORMER SHOULD BE REFERENCED AS S.S.TRANSF. #67 INSTEAD OF S.S.TRANSF. #68 AS TAGGED ON THE EQUIPMENT.

TRANSF. NUMBER	TAP SETTING	PERCENT IMPEDANCE
TRF# 1	117/13.2 KV	7.80%
MTG2-#2A	345/211 KV	15.38% @ 710 MVA BASE
MTG2-#2B	345/211 KV	14.62% @ 710 MVA BASE
CTG-11	120/13.2 KV	16.01% (H-X) 16.08% (H-Y) 34.56% (X-Y)
SS 64	12.54/4.16KV	4.68%
SS 65	336.375/4.16 KV	8.26% (H-X) 5.71% (H-Y) 12.05% (X-Y)
SS 66	12.54/4.16KV	4.75%
SS 68	13.20/4.16KV	4.79%
SS 69	336.375/4.16 KV	17.99% (H-X) 13.39% (H-Y) 35.02% (X-Y)
72A	4055/480 V	7.61%
72B	4055/480 V	7.82%
72C	4055/480 V	7.80%
72E	3950/480 V	8.05%
72EA	4160/480 V	5.76%
72EB	4160/480 V	5.67%
72EC	4055/480 V	5.58%
72ED	4055/480 V	5.59%
72F	3950/480 V	7.79%
* 72G	13.2/0.480KV	5.80%
* 72J	4160/480 V	5.52%
* 72K	4160/480 V	4.00%
72L	3950/480 V	7.68%
72M	4055/480 V	7.58%
72N	3950/480 V	7.82%
72P	4055/480 V	8.20%
72R	3950/480 V	7.50%
* 72T	4160/480 V	5.83%
* 72U	4160/480 V	4.10%
72V	4160/480 V	7.54%
* 72W	4160/480 V	5.78%
* INDICATES TRANSFORMERS WITHOUT TAPS		
XFMR #2	120/13.2KV	8.25% (H-X) @ 7.5 MVA BASE 13.33% (H-Y) @ 7.5 MVA BASE 4.91% (X-Y) @ 7.5 MVA BASE

ABBREVIATIONS

E.S.S.= ENGINEERED SAFETY SYSTEM
S.S.= SYSTEM SERVICE
▲ = DENOTES NON-NUCLEAR SAFETY RELATED
B.O.P.= BALANCE OF PLANT
M = MANUALLY OPERATED CKT. BREAKER
(▲) = DENOTES OAIM
■ = BREAKER TO BE MAINTAINED IN DISCONNECT POSITION WHEN REACTOR IS AT POWER MODES 1, 2 OR 3

NOTE:
AS OF APRIL 8 2004, INTERNATIONAL TRANSMISSION COMPANY (ITC) OWNS AND OPERATES THE SWITCHYARD EQUIPMENT AT THE 345KV AND 120KV VOLTAGE LEVEL DOWN TO THE DISCONNECT FEEDING THE TRANSFORMERS CTG11, 1, 2A, 2B, SS61, SS62, SS65 AND SS69, WHICH PROVIDE POWER TO FERMI.

Fermi 2

UPDATED FINAL SAFETY ANALYSIS REPORT

FIGURE 8.3-1

ONE-LINE DIAGRAM - PLANT 4160 V AND 480V SYSTEM SERVICE INCLUDING SWITCHYARD

DETROIT EDISON COMPANY DRAWING NO. 6SD721-2500-01, REV. BM

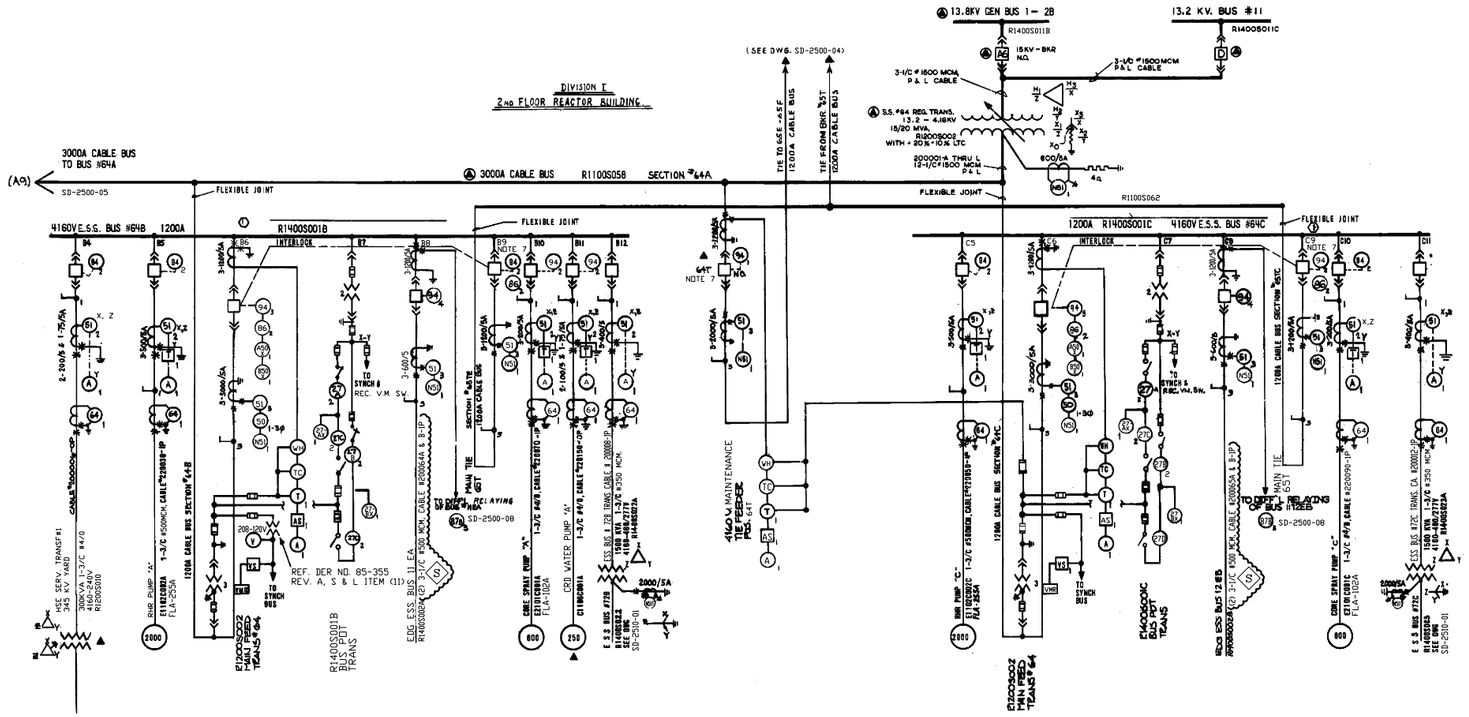

SYMBOLS

DRAW OUT TYPE 4160V BKR. EXCEPT AS NOTED.

SOURCE
GROUND
LOAD

DRAW OUT TYPE (JVM-3)
POTENTIAL TRANSFORMER
SUBSCRIPT INDICATES NO. OF DEVICES
2400-120V ON MAIN FEEDS ONLY.

THREE FUSES & HINGED LINK GROUNDED ON HINGE SIDE.
REPLACE FUSE CLIP WITH SUPERIOR SW. CO. ASM #1 S.P.S.T. SWITCH
* REFER TO DECO SPEC. 3071-128, STD. EJ FOR FUSE SIZE AND TYPE FOR CLASS IE FUSES.

(51)B TIE BRKR'S BETWEEN BUS 64B AND 64C USE TYPE 121AC 53, RANGE 4-16A INV. TIME
TIE BRKR'S TO EDG 4160V BUSSES USE TYPE 121AC 66, RANGE 4-8A INV. TIME, 20-80A INSTANT

SOURCE
THREE HV FUSES (TYPE EJ-1)
DRAW OUT TYPE POTENTIAL TRANSFORMER
4200-120V ONE SET PER BUS FOR BUSES 64B, 64C, 65E, 65F
* TWO FUSES & ONE SWITCH AS SHOWN :
LOAD

(87B) WEST. TYPE CA-16, BUS DIFF'L RELAYING LOCATED ON ASSOC. EDG 4160 V SWITCHGEAR

(P-H) (P-B) TRIP AND LOCKOUT RELAY, TYPE LOR

DENOTES QA 1M
NOT NUCLEAR SAFETY RELATED

(51) TRANSFORMER NEUTRAL INVERSE OVERCURRENT RELAY G.E. TYPE 121AC53, 1.5-6A, INV. TIME, NO INSTANT, INTD. IN CORRESPONDING 4160V COMP.

(51)1 TIME OVERCURRENT PHASE RELAYS FOR TRANSFORMER FEEDERS USE G.E. CO. TYPE 121AC53 RELAYS 4-16A INV. TIME 20-80A INSTANT

(51)2 TIME OVERCURRENT PHASE RELAYS FOR ALL MOTOR FEEDERS USE G.E. CO. TYPE 121AC66 WITH THE FOLLOWING RANGES.

	TIME DIAL RELAY	FOR INST
500 – 800	1.5 – 5A	10 – 40A
801 – 2000	2.5 – 5A	10 – 40A
2001 – 9000	4 – 8A	10 – 40A

NOTE: CORE SPRAY PUMP POSITIONS USE RELAYS WITH 2.5-5 TIME DELAY RANGE.

(51)3 TIME OVERCURRENT PHASE RELAYS FOR MAIN FEEDS USE G.E. CO. TYPE 121AC66 RELAYS 2.5-5A INV. TIME 4 -16A INSTANT

(N51) TIME OVERCURRENT NEUTRAL RELAYS FOR MAIN FEEDS USE G.E. TYPE 121AC83 RELAYS 0.5-2.0A INV. TIME NO INSTANT

(64) TYPE 12PJC11 GROUND PROTECTION RELAY ON BRANCH FEEDERS HAS A RANGE OF 0.5-2.0A. CT RATIO 50/5A

(27) USES A SUFFIX OF A,B,C OR D. UNDER VOLTAGE RELAY WITH DEFINITE TIME DELAY USED IN LOAD SHEDDING SCHEME. SEE CECO FOR DETAILS.

(94)2 TYPE HMA, TRIPS A SPECIFIC POSITION AND IS ASSOCIATED WITH A PARTICULAR SCHEME-i.e. LOAD SHEDDING. SUBSCRIPT INDICATE QUANTITY.

(86) LOCKOUT RELAY, TYPE LOR OR HMA

(50) TYPE HFC23, COORDINATES BUS FEED OVERLOAD PROTECTION WITH U/V LOAD SHEDDING SCHEME

(50A) USES PREFIX A OR B) TYPE HMA; INITIATED BY 50 RELAYS AND IS A PART OF THE SAME FUNCTION

S.P.S.T. SWITCHES ON ONE BASE WITH GLASS COVER. MOUNT ON FRONT DOOR AS INDICATED.

(VS) (AS) VOLTMETER SWITCH, AMMETER SWITCH (REMOTE)

(V) (A) VOLTMETER, AMMETER (REMOTE)

(WH) (WM) WATTHOUR METER & WATTMETER (REMOTE)

(TC) THERMAL CONVERTER (REMOTE).

(T) TRANSDUCER SUPPLIED BY I.T.E.

(T) TRANSDUCER SUPPLIED BY DECO

POT. TEST SW.

(280) INDICATES MOTOR AND IT'S HORSEPOWER RATING

(1) CLASS IE(QA-1) BUSES

E.S.S. ENGRD. SAFEGUARD SYSTEM, IEEE STD.

(VRC) RECORDING VOLTMETER (REMOTE).

CURRENT TRANSFORMER POLARITY MARK

FLA FULL LOAD AMPS

TEST STUDS IN CENTER LEG ONLY, EXCEPT FEEDERS USING 3 STUDS (X,Y,Z) FURNISHED BY DECO, INSTALLED BY MFGR.

3/C 5KV 3-CONDUCTOR ETHYLENE PROPYLENE & HYPALON JACKETED NON SHIELDED CABLE

NOTES:
1. ALL BREAKERS ARE 1200A CONTINUOUS RATING UNLESS OTHERWISE INDICATED
2. CABLE SIZES AND COMPUTER REFERENCE NOs. SHOWN ON FEEDERS
3. ALL BREAKERS ARE 350MVA INTERRUPTING CAPACITY
4. ALL LUGS FOR POWER FEEDS TO BE 2 HOLE DOUBLE IDENT. PRESSURE TYPE
5. ALL POWER AND CONTROL CABLES REQUUIRE TOP ENTRANCE

REFERENCE DRAWINGS

SD-2500-01	ONE LINE DIAG. 4160 & 480V AUX. POW. & STDBY. DIESEL GEN. SYSTEM
SD-2500-05	ONE LINE DIAG. 4160V SYS. SER. BUSES #64A & B50. TURB. BLDG.
SD-2510-01	ONE LINE DIAG. 480V SWGR. E.S.S. BUS #72B, 72C, 72E & 72F.
	REACTOR BUILDING
E-2988-02	REACTOR BUILDING 4160/480V SWGR. ROOMS 2ND & 3RD FL.
SD-2500-08	ONE LINE DIAGRAM, 4160 V DIESEL GEN BUSES 11EA, 12EB, 13ED & 14ED
3071-34	SPECIFICATION FOR 4160 V. METALCLAD SWITCHGEAR.

NOTES CONT'D

6. TRANSFORMER TAP SETTINGS AND PERCENT IMPEDANCE (% Z) CAN BE FOUND ON ONE LINE DIAGRAM SD-2500-01.

7. BREAKER TO BE MAINTAINED IN DISCONNECT POSITION WHEN REACTOR IS AT POWER MODES 1, 2 OR 3

Fermi 2

UPDATED FINAL SAFETY ANALYSIS REPORT

FIGURE 8.3-2

ONE-LINE DIAGRAM, 4160 V BUSES 64B-C

DETROIT EDISON COMPANY DRAWING NO. 6SD721-2500-03, REV. S

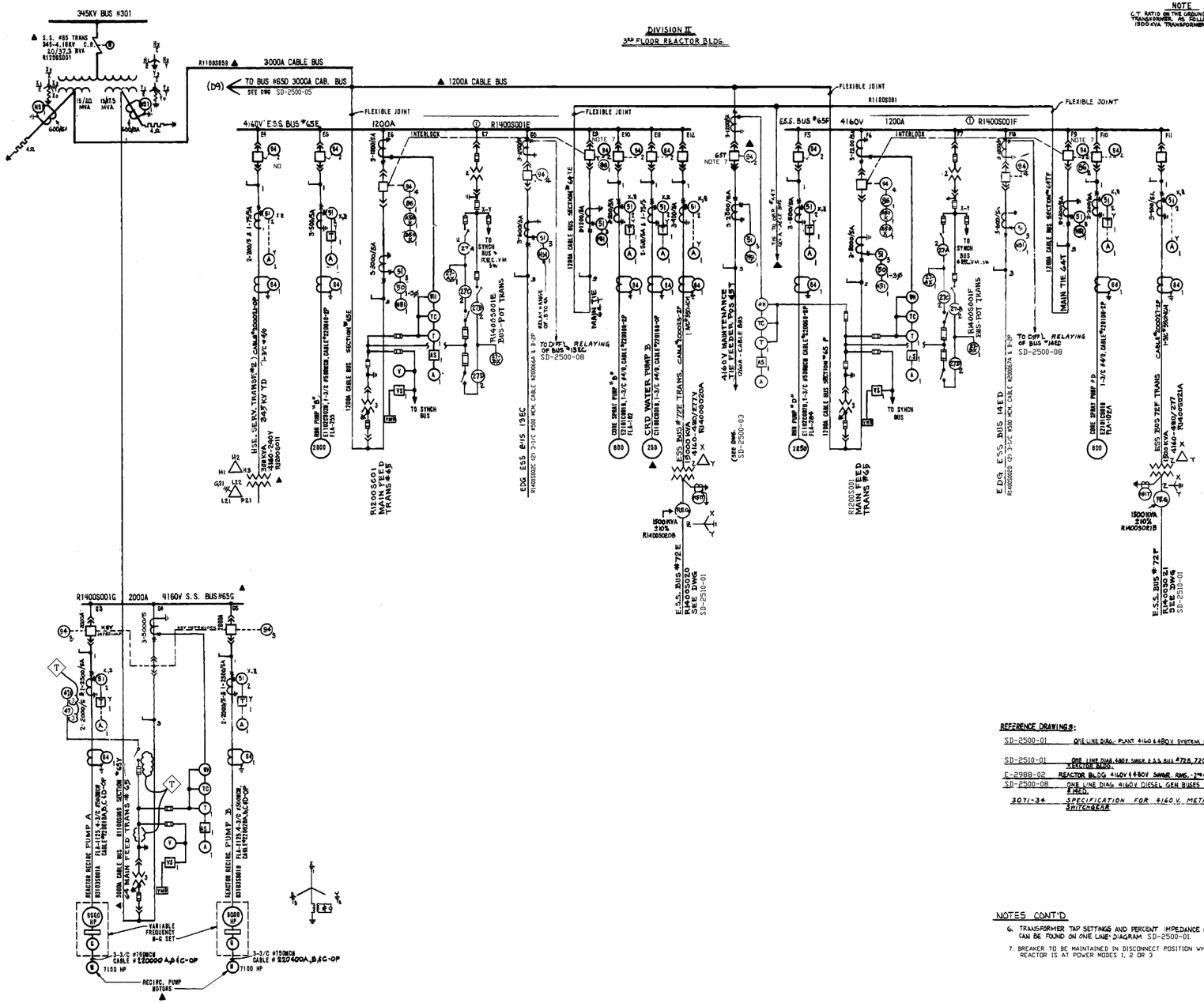

NOTE

C.T. RATIO ON THE GROUND LEG OF 4160/480V TRANSFORMER, AS FOLLOWS:
1500KVA TRANSFORMER CT: 2000/5A

SYMBOLS

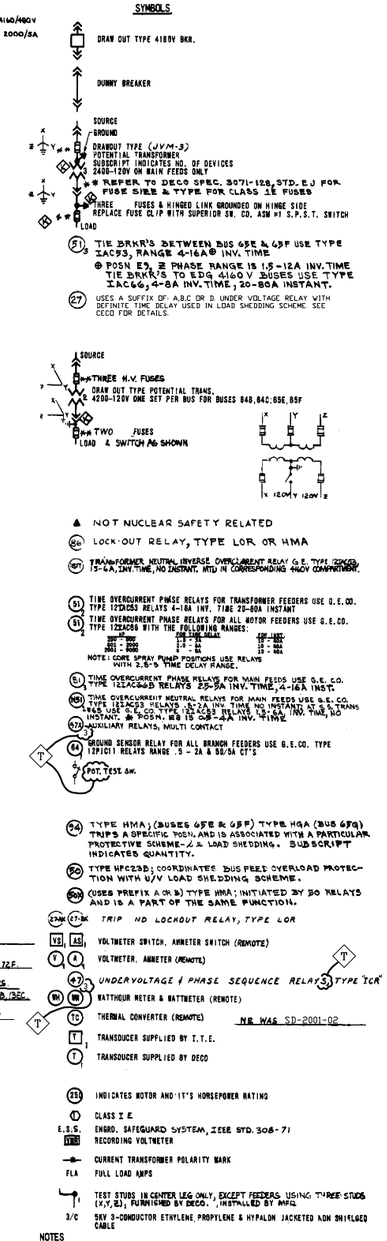

▲ NOT NUCLEAR SAFETY RELATED

(86) LOCK-OUT RELAY, TYPE LOR OR HMA

(87) TRANSFORMER NEUTRAL INVERSE OVERCURRENT RELAY G.E. TYPE IAC53, 1.5-4A, INV. TIME, NO INSTANT. MTD IN CORRESPONDING 480V COMPARTMENT.

(51) TIME OVERCURRENT PHASE RELAYS FOR TRANSFORMER FEEDERS USE G.E.CO. TYPE 12IAC53 RELAYS 4-16A INV. TIME 20-80A INSTANT

(51) TIME OVERCURRENT PHASE RELAYS FOR ALL MOTOR FEEDERS USE G.E.CO. TYPE 12IAC66 WITH THE FOLLOWING RANGES:

800 - 1600	1.5 - 6A	40 - 160
1600 - 2800	3.5 - 12A	80 - 280
2800 - 5000	7.5 - 24	150 - 500

NOTE: CORE SPRAY PUMP POSITIONS USE RELAYS WITH 2.5-5 TIME DELAY RANGE.

(51) TIME OVERCURRENT PHASE RELAYS FOR MAIN FEEDS USE G.E.CO. TYPE 12IAC66D RELAYS 25-50A INV. TIME, 4-16A INST.

(51N) TIME OVERCURRENT NEUTRAL RELAYS FOR MAIN FEEDS USE G.E.CO. TYPE 12IAC53 RELAYS 1.5-4A INV. TIME NO INSTANT. FOR S.S. TRANS #65G USE G.E.CO. TYPE 12IAC66 RELAYS 4-8A INV. TIME, NO INSTANT. @ POSN. E3 IS 0.5-2A INV. TIME

(X) AUXILIARY RELAYS, MULTI CONTACT

(64) GROUND SENSOR RELAY FOR ALL BRANCH FEEDERS USE G.E.CO. TYPE 12PIC11 RELAYS RANGE .5 - 2A & 50/5A CT'S

(POT. TEST SW.)

(94) TYPE HMA; (BUSES 65E & 65F) TYPE HGA (BUS 65G) TRIPS A SPECIFIC POSN. AND IS ASSOCIATED WITH A PARTICULAR PROTECTIVE SCHEME-L & LOAD SHEDDING. SUBSCRIPT INDICATES QUANTITY.

(50) TYPE UPC23D; COORDINATES BUS FREE OVERLOAD PROTECTION WITH U/V LOAD SHEDDING SCHEME.

(50X) (USES PREFIX A OR B) TYPE HMA; INITIATED BY 50 RELAYS AND IS A PART OF THE SAME FUNCTION.

(27-86) TRIP ND LOCKOUT RELAY, TYPE LOR

(VS, AS) VOLTMETER SWITCH, AMMETER SWITCH (REMOTE)

(V, A) VOLTMETER, AMMETER (REMOTE)

(47) UNDERVOLTAGE & PHASE SEQUENCE RELAY (3) TYPE TCR

(W, WM) WATTHOUR METER & WATTMETER (REMOTE)

(TC) THERMAL CONVERTER (REMOTE) NE WAS SD-2001-02

(T) TRANSDUCER SUPPLIED BY T.T.E.

(T) TRANSDUCER SUPPLIED BY DECO

(25) INDICATES MOTOR AND IT'S HORSEPOWER RATING

(1) CLASS I E

E.S.S. ENGRD. SAFEGUARD SYSTEM, IEEE STD. 308-71

(VRS) RECORDING VOLTMETER

CURRENT TRANSFORMER POLARITY MARK

FLA FULL LOAD AMPS

TEST STUDS IN CENTER LEG ONLY, EXCEPT FEEDERS USING THREE STUDS (X,Y,Z), FURNISHED BY DECO., INSTALLED BY MFG.

3/C 5KV 3-CONDUCTOR ETHYLENE PROPYLENE & HYPALON JACKETED NON SHIELDED CABLE

REFERENCE DRAWINGS:

SD-2500-01	ONE LINE DIAG. PLANT 4160 & 480V SYSTEM SERVICE
SD-2510-01	ONE LINE DIAG. 480V SWGR & S.S. BUS #72B, 72C, 72E & 72F. REACTOR BLDG.
E-2988-02	REACTOR BLDG 4160V & 480V SWGR. RMS.-2ND & 3RD FLRS
SD-2500-08	ONE LINE DIAG. 4160V DIESEL GEN BUSES 11EA, 12EB, 13EC & 14ED
3071-34	SPECIFICATION FOR 4160 V. METALCLAD SWITCHGEAR

NOTES CONT'D

6. TRANSFORMER TAP SETTINGS AND PERCENT IMPEDANCE (% Z) CAN BE FOUND ON ONE LINE DIAGRAM SD-2500-01.
7. BREAKER TO BE MAINTAINED IN DISCONNECT POSITION WHEN REACTOR IS AT POWER MODES 1, 2 OR 3

NOTES

1. ALL BREAKERS ARE 1200A CONTINUOUS RATING UNLESS OTHERWISE INDICATED
2. CABLE SIZES AND COMPUTER REFERENCE NO.S SHOWN ON FEEDERS.
3. ALL BREAKERS ARE 350MVA INTERRUPTING CAPACITY.
4. ALL LUGS FOR POWER FEEDS TO BE 2 HOLE DOUBLE INDENT PRESSURE TYPE
5. ALL POWER AND CONTROL CABLES REQUIRE BOTTOM ENTRANCE.

Fermi 2

UPDATED FINAL SAFETY ANALYSIS REPORT

FIGURE 8.3-3

ONE-LINE DIAGRAM, 4160 V
BUSES 65E, 65F, 65G

DETROIT EDISON COMPANY DRAWING NO. 6SD721-2500-04, REV. T

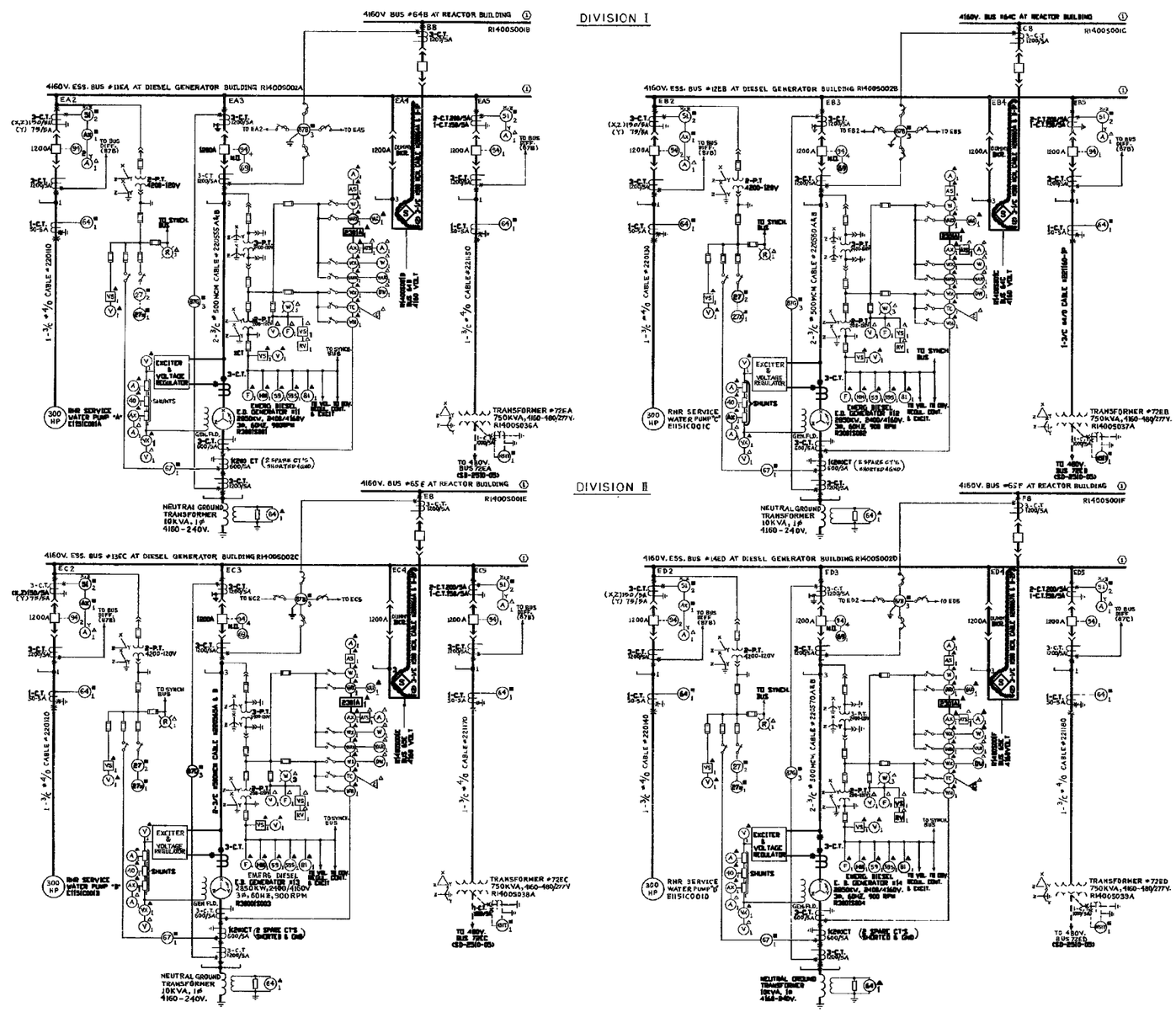

SYMBOLS

A	AMMETER	WA	WATT TRANSDUCER
V	VOLTMETER	VAR	VAR TRANSDUCER
W	WATTMETER	TC	THERMAL CONVERTER
VAR	VARMETER	AS	AMMETER SWITCH
WH	WATTHOURMETER	VS	VOLTMETER SWITCH
F	FREQUENCY METER	ATS	AMMETER TRANSFER SWITCH
HM	HOUR METER	RV	RECORDING VOLTMETER
AX	CURRENT TRANSDUCER		COMPUTER POINT
DW	DIGITAL WATTMETER	VX	VOLTAGE TRANSDUCER

27 — TYPE ITE 27, UNDERVOLTAGE RELAY WITH INV. TIME USED IN LOAD SHEDDING SCHEME.
27A — CARES A SUFFIX DERIVED FROM THE BUS LB-1-C-E. 27A-11CA TYPE LCR. INITIATED BY 27 RELAY IN LOAD SHEDDING SCHEME.
51 — CNOTOR FBR TYPE IAC66; RANGE 15-3A INV. TIME, 50-50A INSTANT
51GF — FBD TYPE IAC53; RANGE 4-16A INV. TIME, 20-80A INSTANT
51NF — NEUT. OVERLOAD RELAYS, TYPE IAC53, RANGE 15-12 INV. TIME
59 — TYPE CV-5. EBG OVERVOLTAGE, RANGE IS 25-140V INV. TIME
59X — SEE CECO FOR RELAY MANUFACTURER, MODEL NO. & RANGE
64 — TYPE PJC11; GND PROTECTION (FOR DET-E), RANGE IS 0.5-2.0A INSTANT
TYPE CV-8; EBG NEUT. GND PROTECTION, RANGE IS 10V
67 — TYPE CRM-1; GEN. REV. PWR, RANGE IS 3.0A, 120V
81 — UNDER FREQUENCY RELAY, SEE CECO FOR DETAILS
87B — TYPE CA-16; BUS DIFFERENTIAL, VARIABLE PERCENTAGE DIFF'L.
87G — TYPE CA; GEN. DIFFERENTIAL, ESS SENSITIVITY
40 — TYPE KC; GEN. UNDER/LOSS OF EXCITATION, RANGE IS 0-100 MILLIVOLTS

DRAWOUT TYPE 4160 V. BREAKER
SOURCE
DRAW OUT TYPE POTENTIAL TRANSF.
SUBSCRIPT INDICATES NO. OF DEVICES
REFER TO DECO SPEC. 2071-100 STA. E.J FOR FUSE SIZE & TYPE FOR CLASS RC FUSES.
CURRENT TRANSF. POLARITY MARKS
NUMBERS OF C.T.'S. & RATIO

TEST STUB FURNISHED BY DECO
CLASS IE SWCR
POT'L TEST SW.
CURRENT TEST SW.
3/C — 3KV, 3-C ETHYLENE PROPYLENE & HYPALON JACKETED NONSHIELDED CABLE.

69 — TYPE MMA; PERMISSIVE OFF-SITE U/T AUX. RELAY
94 — TYPE MMA; TRIPS A SPECIFIC POSITION & IS ASSOCIATED WITH A PARTICULAR SCHEME - L.E. LOAD SHEDDING
25 — TYPE CVE; EBG SYNCHRONIZATION
EGM/A — GOVERNOR CONTROLLER

NOTES

1. ALL BREAKERS ARE 1200A CONTINUOUS RATING UNLESS OTHERWISE INDICATED.
2. CABLE SIZES AND COMPUTER REFERENCE NO.S SHOWN ON EACH FEEDER.
3. ALL BREAKERS ARE 350MVA. INTERRUPTING CAPACITY UNLESS OTHERWISE INDICATED.
4. ALL LUGS FOR POWER FEEDS TO BE 2 HOLE DOUBLE INCOMT PRESSURE TYPE.
5. ■ INDICATED LOCATION OF DEVICES AT 4160V SWGR.
6. ▲ INDICATES LOCATION OF DEVICES AT E,D,G PANEL
7. △ INDICATES LOCATION OF DEVICES AT C,O,R
8. TRANSFORMER TAP SETTINGS AND PERCENT IMPEDANCE CLD CAN BE FOUND ON ONE LINE DIAGRAM 2D-2560-01.

REFERENCE DRAWINGS

2D-2500-01	ONE LINE DIAG. -4160V. 480V. AUX. POWER & STDBY DIESEL GEN. SYSTEM.
2D-2500-03	ONE LINE DIAG. -4160V. BUSES 64D & 64C REACTOR BUILDING.
2D-2500-04	ONE LINE DIAG. -4160V. BUSES 65E,65F & 65G REACTOR BUILDING.
2D-2510-05	ONE LINE DIAG. -480V. BUSES 72EA,72EC,& 72ED.
E-2080	CABLE BUS REAC. AUX. BLDG. 4160V.& 480V SWGR ROOMS 2ND & 3RD FLOORS.
3071-34	4160V. METAL ENCLOSED SWITCHGEAR SPECIFICATION.
B/N-E4-16E	CABLE BUS
33-47196	I.T.E. IMPERIAL CORP. SHOP ORDER NO.
1E-86036	I.T.E. PURCHASE ORDER NO.
1-4A-2570-08, 09, 10 & 12	RELAYING & METERING EDG #11, #12 #13 & #14
1-4A-2570-13, 16, 17 & 18	RELAYING & METERING BUS DIFFERENTIAL BUS #11EA,#12EB,#13EC & #14ED

Fermi 2

UPDATED FINAL SAFETY ANALYSIS REPORT

FIGURE 8.3-4

ONE-LINE DIAGRAM, 4160 V
BUSES 11EA, 12EB, 13EC, 14ED

DETROIT EDISON COMPANY DRAWING NO. 6SD721-2500-08, REV. S

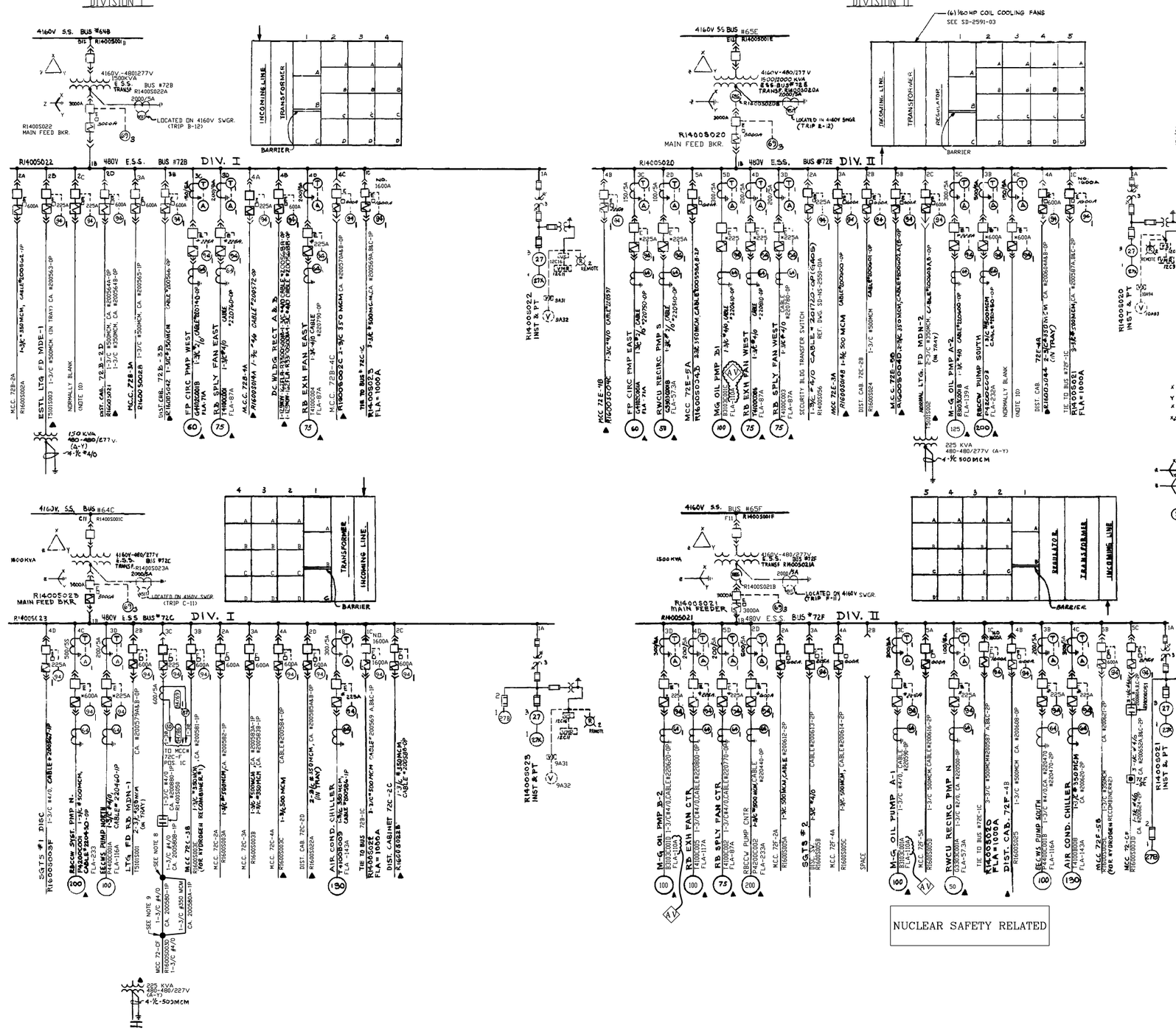

SYMBOLS

- (63) TYPE HMA; INITIATED FROM LOAD SHEDDING SCHEME OF RELATED 4160 V BUS & ACTUATES LOAD SHEDDING TRIP STRING OF ASSOCIATED 480 V BUS (S).
- (94/69) TYPE LOR; INITIATED BY 87 DIFF'L RELAY TRIPS NORMAL FD. (BUS 72C, POS. 3C) & PERMITS ALTERNATE FD. (BUS 72F, POS. 5C) TO CLOSE.
- AIR CIRCUIT BREAKER, DRAW OUT TYPE, STORED ENERGY WITH UNDERVOLTAGE TRIP DEVICE:
  - E - ELECTRICALLY OPERATED
  - M - MANUALLY OPERATED
- POWER SHIELD SOLID STATE OVERCURRENT DEVICE WITH MAXIMUM AMPERE TAP SHOWN.
  - ▲ TYPE SS3: BREAKER EQUIPPED WITH LONG TIME & INSTANTANEOUS ELEMENTS.
  - □ TYPE SS4G: BREAKER EQUIPPED WITH LONG TIME, SHORT TIME & GROUND ELEMENTS.
- (G) GROUND SHIELD STATIC TYPE GROUND FAULT DEVICE, ITE GR-5 RANGE IS 2-50A, 2-24 CYCLES
- (T) TRANSDUCER
- 150/5A (A) CURRENT TRANSFORMER RATIO 150/5A AMMETER (REMOTE).
- 3/C 600V ETHYLENE, PROPYLENE AND HYMALON JACKETED 3-CONDUCTOR CABLE ENGINEERED SAFEGUARD SYSTEM.
- E.S.S.
- (VS) VOLTMETER SWITCH
- (VR) RECORDING VOLTMETER (REMOTE)
- (V) INDICATING VOLTMETER
- MCC MOTOR CONTROL CENTER
- LIGHTS - BUS INDICATING BUS POTENTIAL (REMOTE).
- INTERMEDIATE TERMINALS
- (51) TRANSF. NEUTRAL OVERCURRENT RELAY G.E. TYPE IAC51.
- (50) TYPE ITE 50; INSTANTANEOUS OVERLOAD PROTECTION BUS 72C, POS. 3C.
- (94) TYPE HMA; TRIPS A SPECIFIC POSITION É IS ASSOCIATED WITH A PARTICULAR PROTECTIVE SCHEME i.e. LOAD SHEDDING.
- (27B) TYPE ITE 27 DEGRADED VOLTAGE PROTECTION FOR SWING BUS FEEDERS
- (27) TYPE ITE 27; INITIATES LOAD SHEDDING OF ASSOCIATED BUS
- (27K) TYPE LOR; INITIATED BY 27 RELAY & ACTUATES 94 TRIP STRING FOR U/V LOAD SHEDDING
- AUXILIARY POTENTIAL TRANS. 120/120 V.
- (87) TYPE ITE 50; CABLE DIFF'L PROTECTION BUS 72C, POS. 3C
- POTENTIAL TRANS. 480V/120V
- 3 ← DENOTES QUANTITY
- REFER TO DECO SPEC. 3071-128, STD. EJ FOR FUSE SIZE & TYPE FOR CLASS IE FUSES
- (94/86) TYPE LOR; INITIATED BY 50 OVERLOAD RELAY. TRIPS NORMAL FD. (BUS 72C, POS. 3C) & BLOCKS CLOSING OF THE ALTERNATE FD (BUS 72F, POS 5C).
- INDICATES TOP OR BOTTOM ENTRY AS APPROPIATE FOR POWER FEEDS TO 480V TRANS.
- CONTACTOR

NOTES

1. ALL BREAKERS UNLESS OTHERWISE NOTED SHALL BE 600A FRAME.
2. TRANSFORMER TAP SETTINGS AND PERCENT IMPEDANCE (%Z) CAN BE FOUND ON ONE LINE DIAGRAM SD-2500-01.
3. R14005020A TYPICAL PLANT EQUIPMENT IDENTIFICATION NUMBER SEE SPEC.3071-43 ARTICLE B.2.
4. EQUIPMENT ON THIS DRAWING IS CLASS IE.
5. INSTALLATION IS TO BE QUALITY LEVEL I.
6. POWER & CONTROL CABLES REQUIRE TOP ENTRANCE ON SWGR BUSES #72B & #72C, BOTTOM ENTRANCE ON BUSES #72E & 72F.
7. ▲ DENOTES NON-NUCLEAR SAFETY RELATED EQUIPMENT.

REFERENCE DWGS.

SD-2500-01	ONE LINE DIAG.-4160 & 480V. AUX. POW. & STANDBY DIESEL GEN. SYSTEM
SD-2500-03	ONE LINE DIAG.-4160V S.S. BUSES 64B, 64C
SD-2500-04	ONE LINE DIAG.-4160V S.S. BUSES 65E, 65F & 65G
3071-43	480 V. INDOOR UNIT SUBSTATION SPEC.
1-2573-43 & 44	S/D FOR 480V LOAD SHEDDING SCHEME
SD-2500-13	FLEX ONE LINE DIAGRAM

NUCLEAR SAFETY RELATED

DETROIT EDISON COMPANY DRAWING NO. 6SD721-2510-01, REV. AV

Fermi 2

UPDATED FINAL SAFETY ANALYSIS REPORT

FIGURE 8.3-5

480 V BUSES 72B, 72C, 72E AND 72F

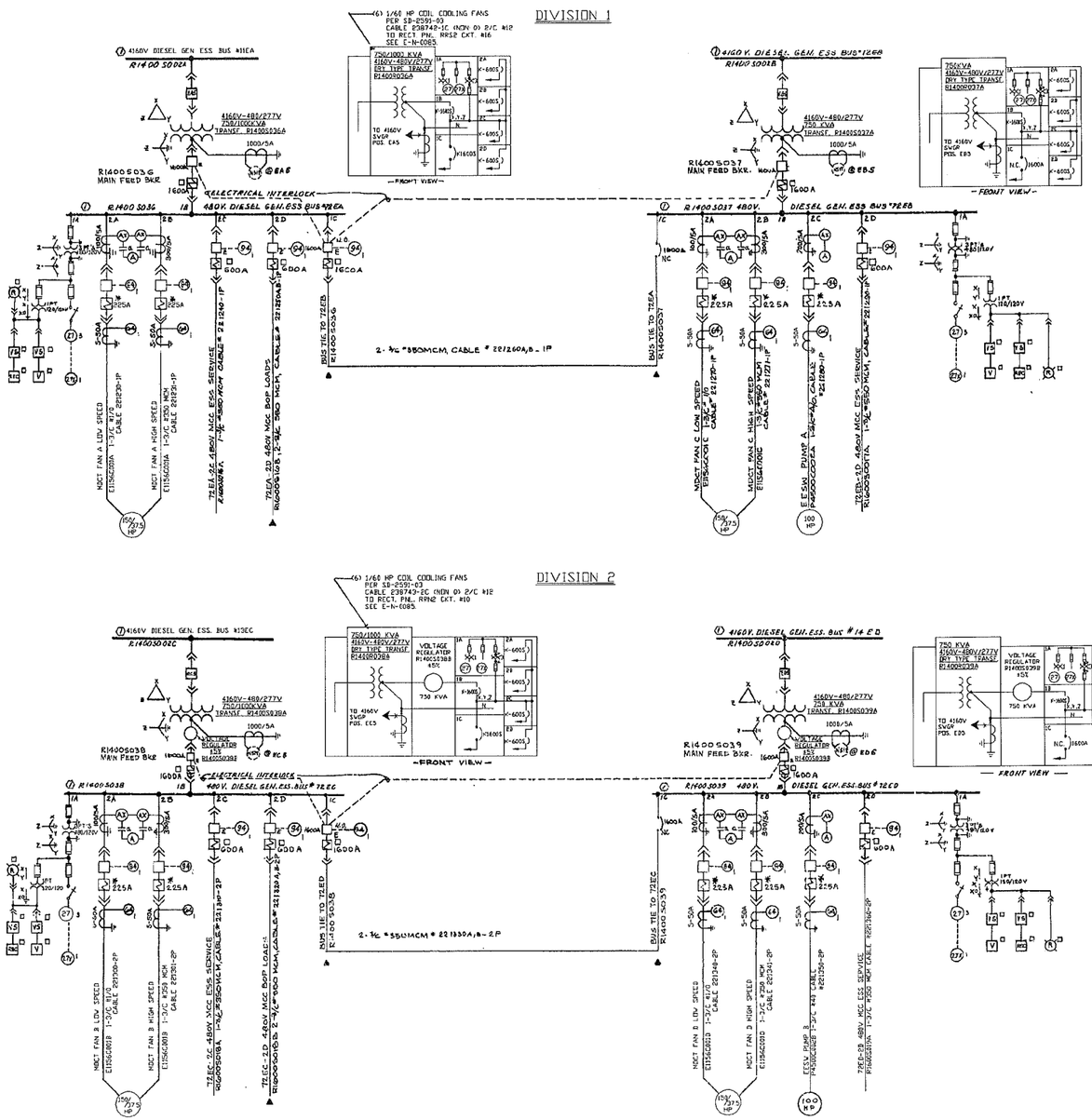

SYMBOLS

- AIR CIRCUIT BREAKER DRAW OUT TYPE, STORED ENERGY WITH U/V DEVICE ELECTRICALLY OPERATED
- POWER SHIELD SOLID STATE OVERCURRENT DEVICE WITH MAXIMUM AMPERE TAP SHOWN
- TYPE SS3 BREAKER EQUIPPED WITH LONG TIME AND INSTANTANEOUS ELEMENTS.
- TYPE SS4G BREAKER EQUIPPED WITH LONG TIME-SHORT TIME & GROUND ELEMENTS.
- TYPE SS5G - BREAKER EQUIPPED LONG TIME, SHORT TIME, INSTANANEOUS AND GROUND ELEMENT.
- GROUND SHIELD STATIC TYPE GROUND FAULT DEVICE, ITE GR-5 RANGE IS 5-50A, 2-24 CYCLES.
- CURRENT TRANSDUCER
- QUANTITY
- CURRENT TRANSFORMER & RATIO 250/5A
- AMMETER(REMOTE)
- #C – 600V ETHYLENE PROPYLENE AND HYPALON JACKETED 3-CONDUCTOR CABLE
- TYPE IAC55; TRF, NEUT. OVERCURRENT RELAY, RANGE IS 1.5 - 12A INV. TIME
- TYPE HMA; TRIPS A SPECIFIC POSITION & IS ASSOCIATED WITH A PARTICULAR SCHEME - C.C.- LOAD SHEDDING.
- M.C.C MOTOR CONTROL CENTER.
- CAUSES A SUFFIX DERIVED FROM BUS ID- C.C. 27X-72EA) TYPE LOR, INITIATED BY 27 RELAY IN LOAD SHEDDING SCHEME.
- TYPE ITE 27, UNVOLTAGE RELAY WITH INVERSE TIME. USED IN LOAD SHEDDING SCHEME.
- FUSE
- POTENTIAL TRANSF. 480V/120V.
- DENOTES QUANTITY
- REFER TO BECO SPEC. 3071-128, STB EJ FOR FUSE SIZE AND TYPE.
- BUS POTENTIAL MONITOR LIGHTS (ON MAIN CONTROL ROOM)
- V VOLTMETER
- VS VOLTMETER SWITCH
- RC RECORDING VOLTMETER
- REMOTE ON RELAY ROOM.
- POTENTIAL TEST SWITCH (ELECTRO SWITCH CO)
- 1600A M.O.B. WITHOUT PROT-DEVICE

NOTES:

1. ALL BREAKERS-UNLESS OTHERWISE NOTED-SHALL BE 600A FRAME.
2.
3. EQUIPMENT ON THIS DRAWING IS CLASS 1, Ⓘ
4. INSTALLATION IS TO BE QUALITY LEVEL 1 Ⓘ
5. ▲ -DENOTES NOT NUCLEAR SAFETY RELATED
6. □ -INDICATES REMOTE LOCATED DEVICE
7. INSTANTANEOUS ELEMENT OF 70CB-P2 SHALL BE REMOVED.
8. TRANSFORMER TAP SETTINGS AND %IMPEDANCE (%Z) CAN BE FOUND ON ONE LINE DIAGRAM SD-2500-01.

REFERENCE DRAWINGS:

SD-2509-01	ONE LINE DIAGRAM PLAN 4160V-480V SYSTEM SERVICE
SD-2712-33	W/D 480V SWGR DEVICES DEVELOPMENTS
SD-2500-98	ONE LINE DIAGRAM 4160V D/G BUSES 11EA, 12EB, 13EC & 14ED
3071-243	480V INDOOR UNIT SUBSTATION SPEC
B/M E5-223E	480V INDOOR UNIT SUBSTATION B/M

Fermi 2

UPDATED FINAL SAFETY ANALYSIS REPORT

FIGURE 8.3-6

480V BUSES 72EA, 72EB, 72EC, 72ED

DETROIT EDISON COMPANY DRAWING NO. 6SD721-2510-05, REV. N

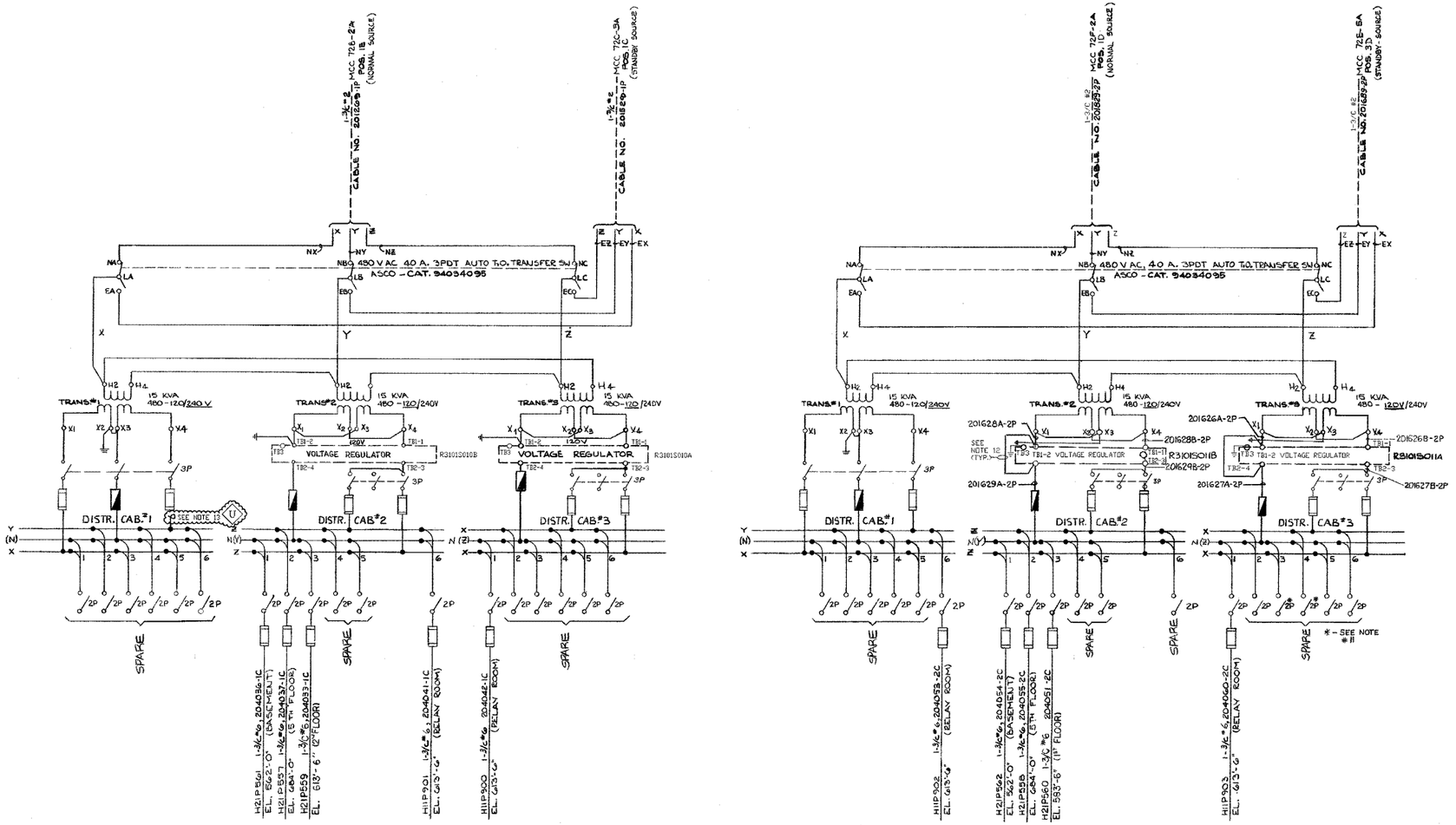

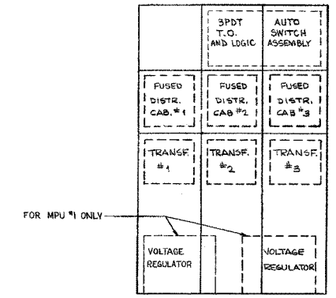

GENERAL ARRANGEMENT
(N.T.S.)

PHASE RELATIONSHIP
(AS FOLLOWS)

PRIMARY

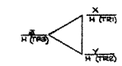

480V. TRANS.#1,2,3

SECONDARY

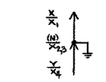

2X120-240V TRANS.#1

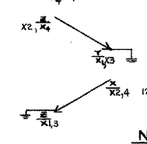

120V. TRANS.#2

120 V TRANS.#3

NOTES

1) SEE SPECIFICATION 3071-14B FOR ADDITIONAL INFORMATION.
2) UNITS WILL BE MOUNTED IN TYPICAL 20" X 20" MOTOR CONTROL CENTER COMPARTMENTS - 3 FRAMES FOR EACH UNIT.
3) TRANSFORMER SECTIONS SHALL BE LOUVERED FOR VENTILATION.
4) TRANSFORMER IMPEDANCE 1.85% AT 15KVA
5) ALL TRANSFORMER CONNECTIONS H2-H4 TERMINALS FOR 5% BOOST.
6) THE MODULAR POWER UNITS SHOWN ON THIS DWG ARE CLASS 1E AS DEFINED BY IEEE STD. 308-71
7) IMPORTANT: TWO 120V FEEDERS CAN NOT BE PARALLELED. SEE CAUTION AND VECTOR DIAGRAM.
8) MPU = MODULAR POWER UNIT
9) FUSES TYPE AND SIZE ARE SHOWN ON SPEC. 3071-128 STD. E3-2-1.
10) TO ROUTE CABLES 204037-1C AND 204055-2C IN SUCH A MANNER SO THAT THESE CABLES ARE PLACED ON TOP OF THE REST OF THE CABLES IN THE FOLLOWING TRAYS: CABLE 204037-1C IN TRAYS 1C-094, 1C-056 1C-123. CABLE 204055-2C IN TRAYS 2C-022, 2C-034, 2C-058 & 2C-096
11) VENDOR NAMEPLATE SHOWS 60A-3P, ONLY 2-POLE USED.
12) TB1-2 AND TB2-4 ARE INTERNALLY CONNECTED BY THE VENDOR.
13) FUSE CLIP AT MPU#1 SPARE DIST. CAB. 1, LINE T3 WAS REMOVED FROM THE FUSE BLOCK. LINE T3 WIRE WAS TAPED. ALL THREE FUSES AT MPU#1 SPARE DIST. CABINET 1 HAVE BEEN REMOVED FROM FUSE BLOCKS.

120V AC - MPU#1
R31015001
DIVISION 1
ATTACHED TO MCC 72B-2A
2ND FLR. AUXILIARY BLDG.
COL. F-10 EL. 612'-6"

OUTPUT VOLTAGE SETTING:

1. REGULATOR SHALL BE SET FOR 130V AC FOR CAB. # 2
2. REGULATOR SHALL BE SET FOR 125VAC FOR CAB. # 3.

120V AC - MPU#2
R31015002
DIVISION 2
ATTACHED TO MCC 72E-2A
3RD FLR. AUXILIARY BLDG.
COL. F-10 EL. 643'-6"

OUTPUT VOLTAGE SETTING
REGULATORS SHALL BE SET FOR 125V AC

SYMBOL

2P INDICATES PHASE FUSE WITH 60A SLUG IN NEUTRAL

INDICATES SLUG

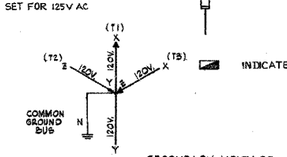

SECONDARY VOLTAGE PHASING DIAGRAM
MPU#1 & MPU#2

·CAUTION·

1. WHEN MEGGERING OR GROUND TESTING A DISTRIBUTION CABINET AND ASSOCIATED TRANSFORMER, LIFT GROUND OF TRANSFORMER BEING TESTED ONLY.
2. WHEN PHASING SECONDARY VOLTAGES, SEE SECONDARY VOLTAGE PHASING DIAGRAM.

REFERENCE DRAWINGS

SD-2512-15A MCC. FRONTAL ELEVATION DRAWINGS -18 -20 -22
SD-2531-23 WIRING DIAGRAM MPU #2
SD-2531-24 WIRING DIAGRAM - MPU #1
I-2600-01 120V DIST. PANELS - ONELINE DIAG.
I-2600-03 " " " "
E-2833-06 CONDUITS-INSERTS FOR MCC's 1,2&3rd FLRS RX BLD
E-2997-06 CAB. MTG. DET. MPU'S 1, 3 & 5
SD-222-17, -17A I/D 480V A.C. MCC 72C-3A
SD-2522-19A, -19B I/D 480V A.C. MCC 72E-5A
SD-2522-20 I/D 480V A.C. MCC 72B-2A
SD-2522-24 I/D 480V A.C. MCC 72F-2A

Fermi 2

UPDATED FINAL SAFETY ANALYSIS REPORT

FIGURE 8.3-7

ONE-LINE DIAGRAM, 120 V INSTRUMENT AND CONTROL POWER FEEDER, DIVISIONS I & II

DETROIT EDISON COMPANY DRAWING NO. 6SD721-2530-01, REV. U

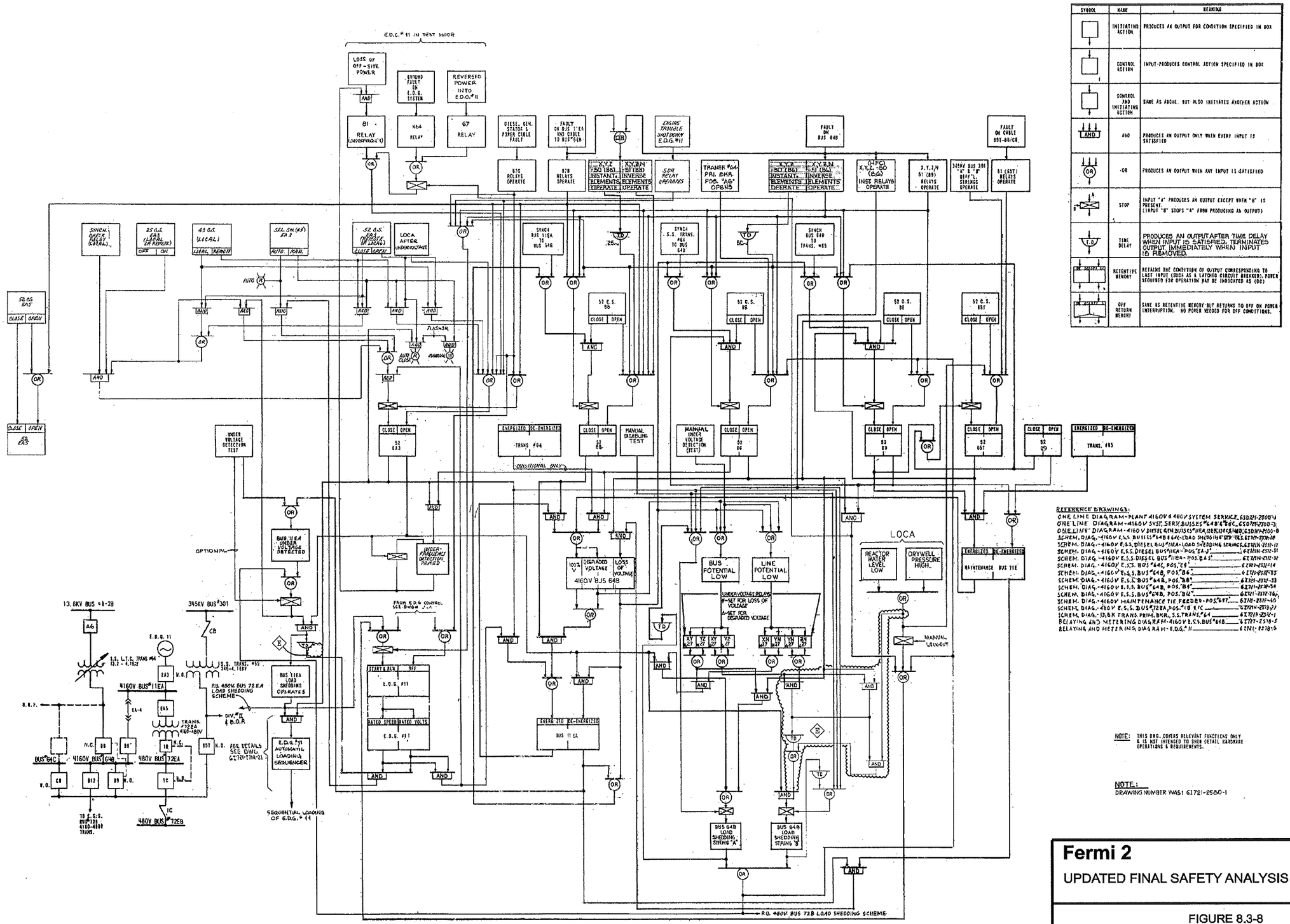

SYMBOL	NAME	MEANING
	INITIATING ACTION	PRODUCES AN OUTPUT FOR CONDITION SPECIFIED IN BOX
	CONTROL ACTION	INPUT-PRODUCES CONTROL ACTION SPECIFIED IN BOX
	CONTROL AND INITIATING ACTION	SAME AS ABOVE, BUT ALSO INITIATES ANOTHER ACTION
AND	AND	PRODUCES AN OUTPUT ONLY WHEN EVERY INPUT IS SATISFIED
OR	OR	PRODUCES AN OUTPUT WHEN ANY INPUT IS SATISFIED
A B	STOP	INPUT "A" PRODUCES AN OUTPUT EXCEPT WHEN "B" IS PRESENT. (INPUT "B" STOPS "A" FROM PRODUCING AN OUTPUT)
T.D.	TIME DELAY	PRODUCES AN OUTPUT AFTER TIME DELAY WHEN INPUT IS SATISFIED. TERMINATES OUTPUT IMMEDIATELY WHEN INPUT IS REMOVED.
	RETENTIVE MEMORY	RETAINS THE CONDITION OF OUTPUT CORRESPONDING TO LAST INPUT (SUCH AS A LATCHED CIRCUIT BREAKER). POWER REQUIRED FOR OPERATION MAY BE INDICATED AS (DC)
	OFF RETURN MEMORY	SAME AS RETENTIVE MEMORY BUT RETURNS TO OFF ON POWER INTERRUPTION. NO POWER NEEDED FOR OFF CONDITIONS.

REFERENCE DRAWINGS:

ONE LINE DIAGRAM-PLANT 4160V & 480V SYSTEM SERVICE _ 6SD721-2580-1
ONE LINE DIAGRAM-4160 V SYST. SERV. BUSSES #64B & #64C _ 6SD721-2580-3
ONE LINE DIAGRAM-4160 V DIESEL GEN. BUSSES #11EA, 12EB, 13EC & 14ED _ 6SD721-2580-8
SCHEM. DIAG.-4160V E.S.S. BUSSES #64B & 64C-LOAD SHEDDING & STRIPPING _ 6721H-2312-18
SCHEM. DIAG.-4160V E.S.S. DIESEL BUS #11EA-LOAD SHEDDING & STRIPPING _ 6721H-2312-17
SCHEM. DIAG.-4160V E.S.S. DIESEL BUS #11EA-POS. "EA-3" _ 6721H-2312-31
SCHEM. DIAG.-4160V E.S.S. DIESEL BUS #11EA-POS. "EA-5" _ 6721H-2312-32
SCHEM. DIAG.-4160V E.S.S. BUS #64C, POS. "C9" _ 6721-2312-14
SCHEM. DIAG.-4160V E.S.S. BUS #64B, POS. "B6" _ 6721-2312-35
SCHEM. DIAG.-4160V E.S.S. BUS #64B, POS. "B8" _ 6721-2312-33
SCHEM. DIAG.-4160V E.S.S. BUS #64B, POS. "B9" _ 6721-2312-34
SCHEM. DIAG.-4160V E.S.S. BUS #64B, POS. "B12" _ 6721-2312-36
SCHEM. DIAG.-4160V MAINTENANCE TIE FEEDER-POS. "B17" _ 6721-2312-40
SCHEM. DIAG.-480V E.S.S. BUS #72EA, POS. "1B & 1C" _ 6721H-2312-37
SCHEM. DIAG.-13.8K TRANS PRIM. BKR., S.S. TRANS. #64 _ 6721H-2312-1
RELAYING AND METERING DIAGRAM-4160V E.S.S. BUS #64B _ 6721-2318-5
RELAYING AND METERING DIAGRAM-E.D.G. # 11 _ 6721-2318-6

NOTE: THIS DWG. COVERS RELEVANT FUNCTIONS ONLY & IS NOT INTENDED TO SHOW DETAIL HARDWARE OPERATIONS & REQUIREMENTS.

NOTE 1:
DRAWING NUMBER WAS: 6I721-2580-1

Fermi 2

UPDATED FINAL SAFETY ANALYSIS REPORT

FIGURE 8.3-8

OPERATION OF POWER LINE FEED AND TIE BREAKERS, 4160 V BUSES 64B AND 11 EA FUNCTIONAL LOGIC DIAGRAM

DETROIT EDISON COMPANY DRAWING NO. 6I721-2570-01, REV. E

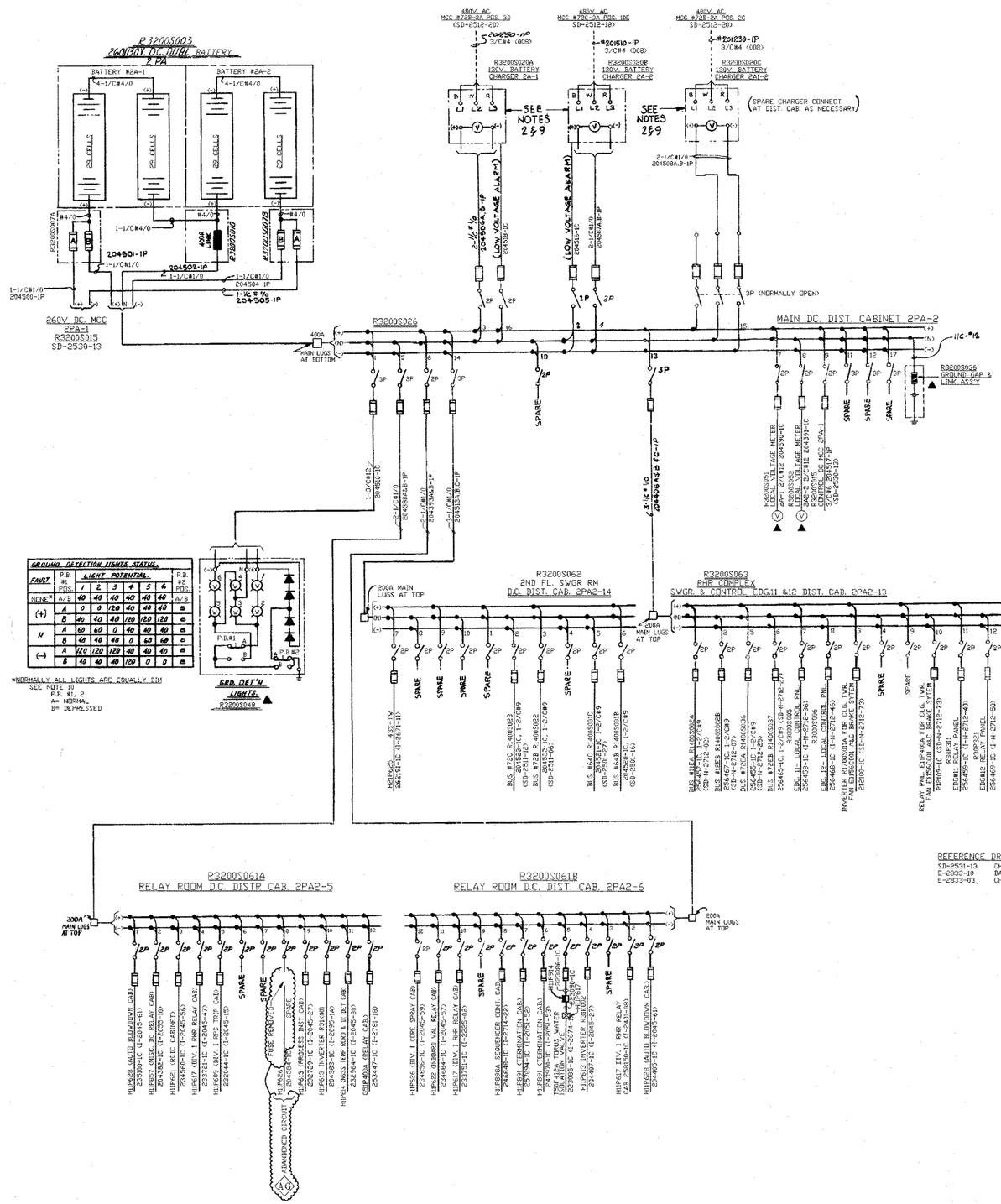

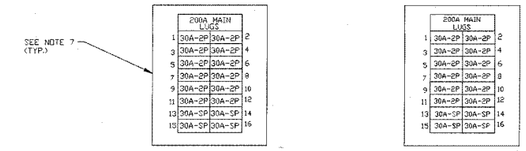

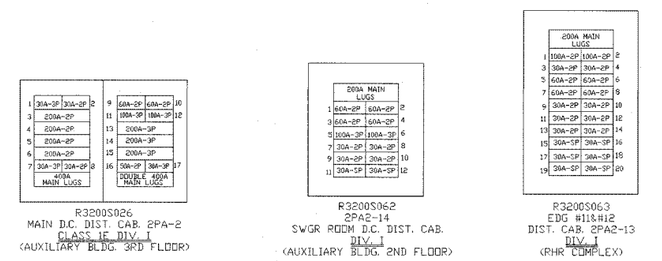

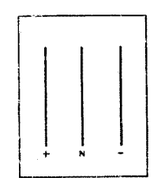

TYPICAL CABINET DWG
POLARITY- FRONT VIEW

REFERENCE DRAWINGS

SD-2531-13	CHARGER INTERNAL WIRING DIAGRAM.
E-2833-10	BATTERY INSTALLATION DRAWING.
E-2833-03	CHARGER INSTALLATION DRAWING.

NOTES:

1. REFER TO DETROIT EDISON SPECIFICATION 3071-128, STD. EJ FOR FUSE SIZE, TYPE AND RELATED DATA.
2. BATTERY CHARGER HIGH VOLTAGE ALARM AND TRIP SET AT 134.0 ± .5V AND 138.5 ± .5V RESPECTIVELY. LOW VOLTAGE ALARM SET AT 124.5 ± .5V.
3. PROVIDE ISOLATING BARRIERS AROUND CENTER FUSE CLIP OF 3P SWITCHES.
4. ▲ DENOTES NON-NUCLEAR SAFETY RELATED
5. ALL CABLES SHALL BE 2/C #12 UNLESS OTHERWISE NOTED
6. "SP" DENOTES "SPARE"
7. FRONTAL ELEVATIONS OF DISTRIBUTION CABINETS SHOW SWITCH AND FUSE CLIP SIZED NOT FUSE SIZES. REFER TO NOTE 1 FOR FUSE SIZES.
8. FOR DETAILS OF HI & LO-VOLTAGE AND LOSS OF POWER ALARMS AT MAIN CONTROL ROOM ANNUNCIATOR CABINET, SEE DWG. SD-2531-13, TABLES 3 & 4.
9. BATTERY CHARGER FLOAT AND EQUALIZE VOLTAGES SHALL BE SET AT 129.0 ± .5V AND 139.5 ± .5V RESPECTIVELY.
10. GROUND DETECTION LIGHTS ARE 10W, 120V RATED. PRESENCE OF FAULT NOT INDICATED UNTIL PB#2 IS DEPRESSED.

Fermi 2

UPDATED FINAL SAFETY ANALYSIS REPORT

FIGURE 8.3-9, SHEET 1

ONE-LINE DIAGRAM – 260/130 48/24-V DC

DETROIT EDISON COMPANY DRAWING NO. 6SD721-2530-10, REV. AG

REV 16 10/09

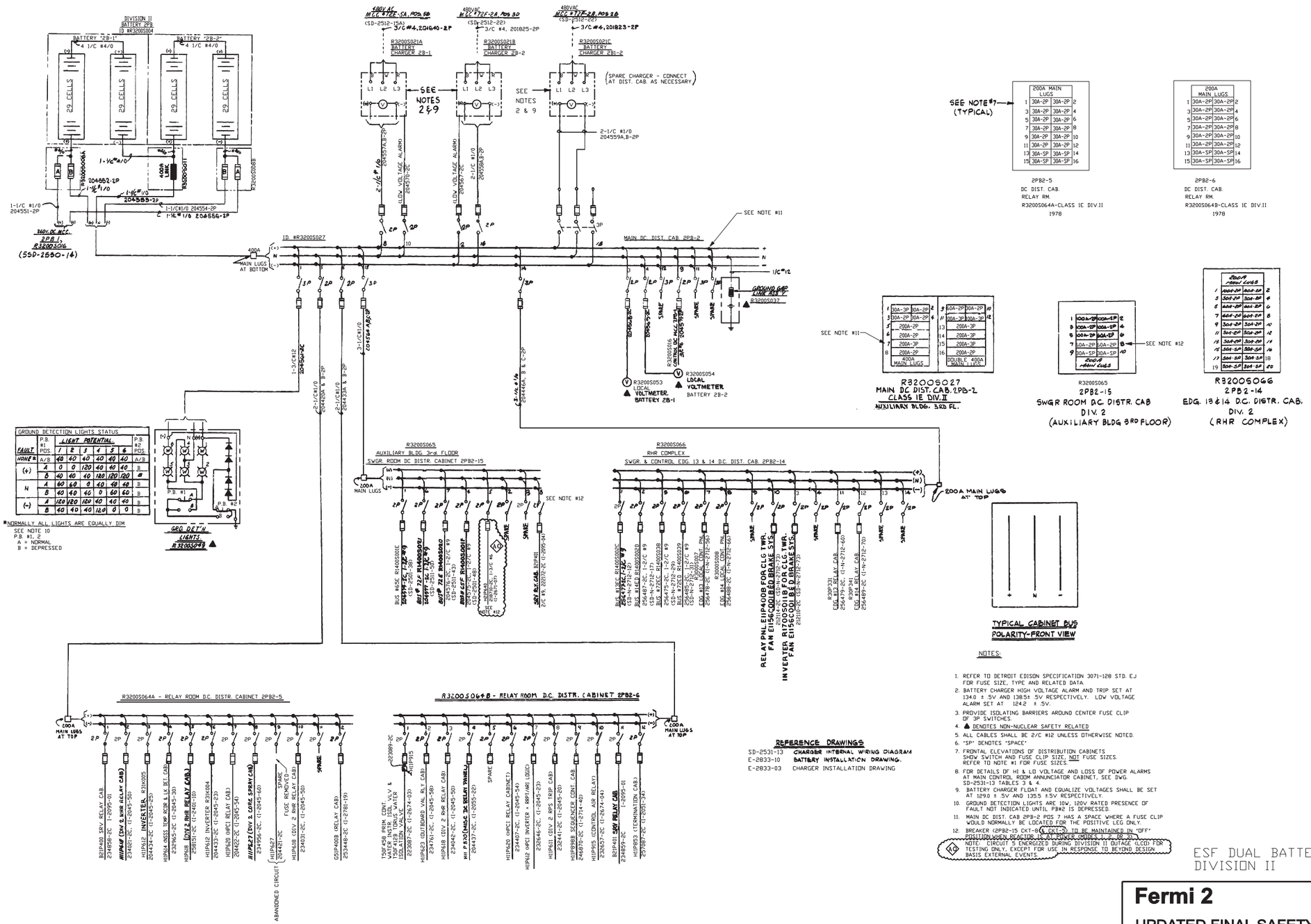

Fermi 2

UPDATED FINAL SAFETY ANALYSIS REPORT

FIGURE 8.3-9, SHEET 2

ONE-LINE DIAGRAM - 260/130 48/24 V DC

DETROIT EDISON COMPANY DRAWING NO. 6SD721-2530-11, REV. AQ

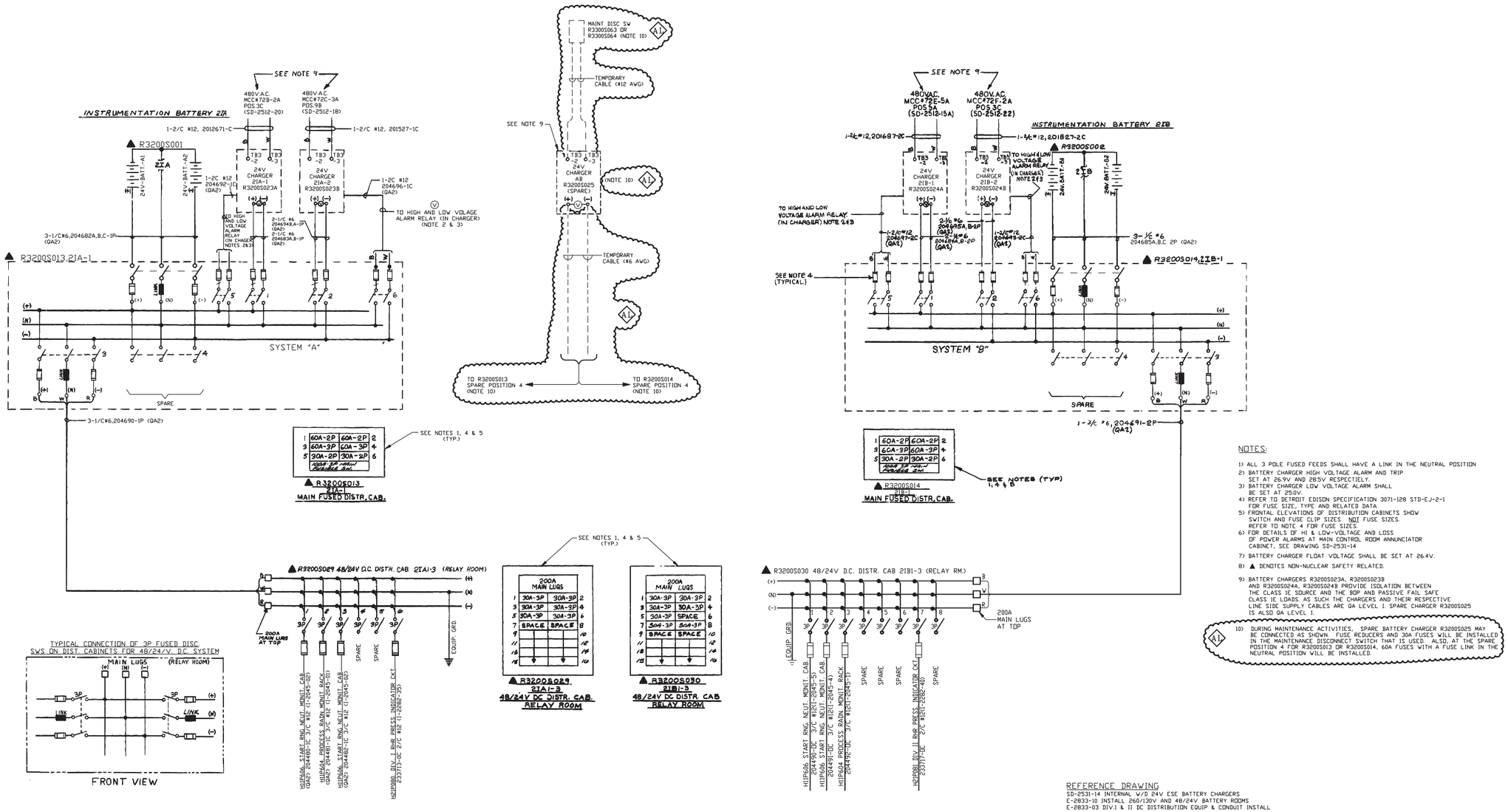

NOTES:

1) ALL 3 POLE FUSED FEEDS SHALL HAVE A LINK IN THE NEUTRAL POSITION
2) BATTERY CHARGER HIGH VOLTAGE ALARM AND TRIP SET AT 26.9V AND 28.5V RESPECTIELY.
3) BATTERY CHARGER LOW VOLTAGE ALARM SHALL BE SET AT 25.0V.
4) REFER TO DETROIT EDISON SPECIFICATION 3071-128 STD-EJ-2-1 FOR FUSE SIZE, TYPE AND RELATED DATA.
5) FRONTAL ELEVATIONS OF DISTRIBUTION CABINETS SHOW SWITCH AND FUSE CLIP SIZES NOT FUSE SIZES. REFER TO NOTE 4 FOR FUSE SIZES.
6) FOR DETAILS OF HI & LOW-VOLTAGE AND LOSS OF POWER ALARMS AT MAIN CONTROL ROOM ANNUNCIATOR CABINET, SEE DRAWING SD-2531-14
7) BATTERY CHARGER FLOAT VOLTAGE SHALL BE SET AT 26.4V.
8) ▲ DENOTES NON-NUCLEAR SAFETY RELATED.
9) BATTERY CHARGERS R3200S023A, R3200S023B AND R3200S024A, R3200S024B PROVIDE ISOLATION BETWEEN THE CLASS 1E SOURCE AND THE BOP AND PASSIVE FAIL SAFE CLASS 1E LOADS. AS SUCH THE CHARGERS AND THEIR RESPECTIVE LINE SIDE SUPPLY CABLES ARE QA LEVEL 1. SPARE CHARGER R3200S025 IS ALSO QA LEVEL 1.
10) DURING MAINTENANCE ACTIVITIES, SPARE BATTERY CHARGER R3200S025 MAY BE CONNECTED AS SHOWN. FUSE REDUCERS AND 30A FUSES WILL BE INSTALLED IN THE MAINTENANCE DISCONNECT SWITCH THAT IS USED. ALSO, AT THE SPARE POSITION 4 FOR R3200S013 OR R3200S014, 60A FUSES WITH A FUSE LINK IN THE NEUTRAL POSITION WILL BE INSTALLED.

REFERENCE DRAWING
SD-2531-14 INTERNAL W/D 24V ESE BATTERY CHARGERS
E-2833-10 INSTALL 260/130V AND 48/24V BATTERY ROOMS
E-2833-03 DIV.I & II DC DISTRIBUTION EQUIP & CONDUIT INSTALL

Fermi 2

UPDATED FINAL SAFETY ANALYSIS REPORT

FIGURE 8.3-10

ONE-LINE DIAGRAM 48/24-V DC INSTRUMENTATION BATTERIES DISTRIBUTION

DETROIT EDISON COMPANY DRAWING NO. 6SD721-2530-17, REV. AL

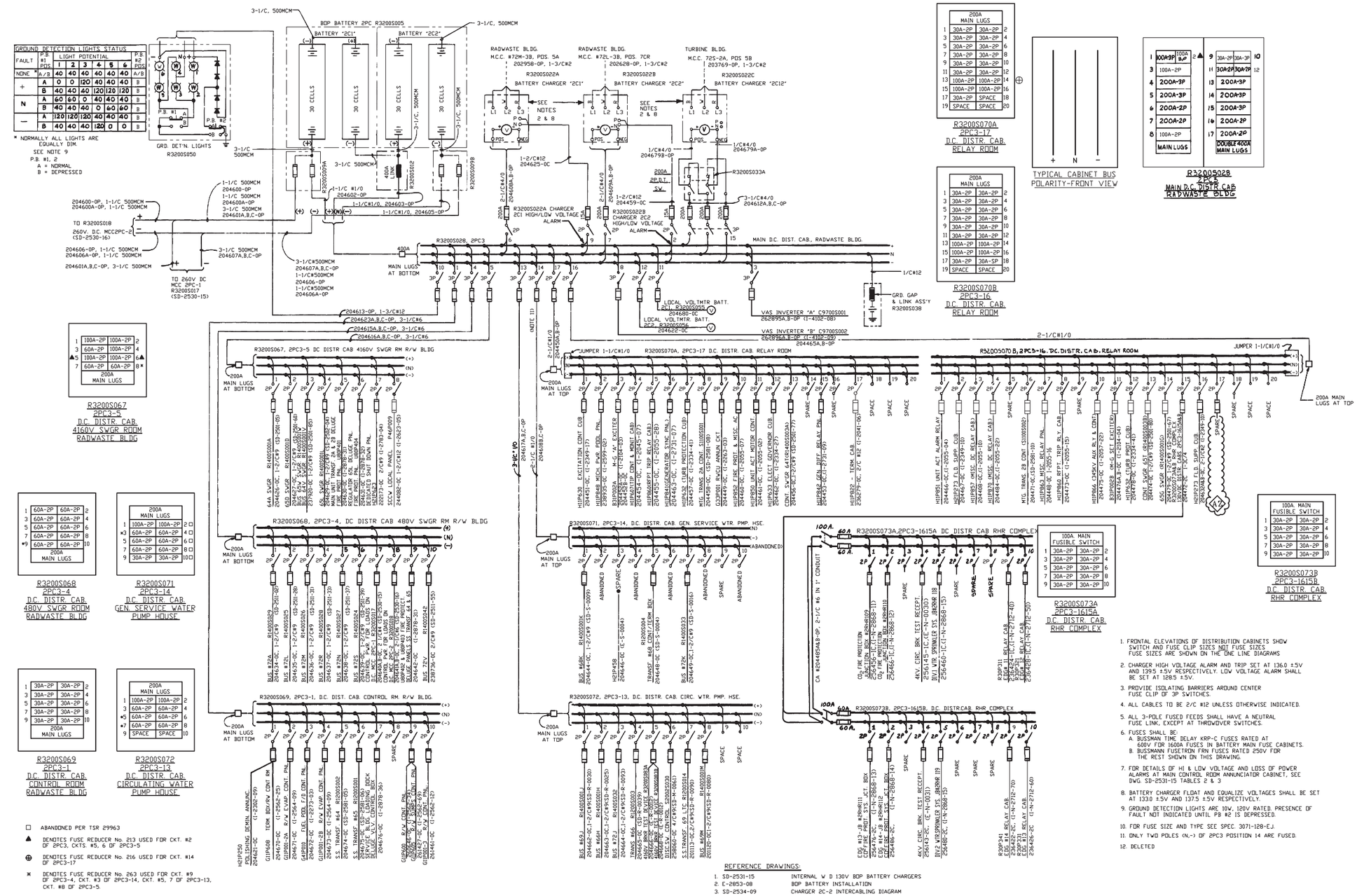

1. FRONTAL ELEVATIONS OF DISTRIBUTION CABINETS SHOW SWITCH AND FUSE CLIP SIZES NOT FUSE SIZES. FUSE SIZES ARE SHOWN ON THE DMC LINE DIAGRAMS
2. CHARGER HIGH VOLTAGE ALARM AND TRIP SET AT 136.0 ±5V AND 139.5 ±5V RESPECTIVELY. LOW VOLTAGE ALARM SHALL BE SET AT 128.5 ±5V.
3. PROVIDE ISOLATING BARRIERS AROUND CENTER FUSE CLIP OF 3P SWITCHES.
4. ALL CABLES TO BE 2/C #12 UNLESS OTHERWISE INDICATED.
5. ALL 3-POLE FUSED FEEDS SHALL HAVE A NEUTRAL FUSE LINK, EXCEPT AT THROWOVER SWITCHES.
6. FUSES SHALL BE:
   A. BUSSMAN TIME DELAY KRP-C FUSES RATED AT 600V FOR 1600A FUSES IN BATTERY MAIN FUSE CABINETS.
   B. BUSSMANN FUSETRON FRN FUSES RATED 250V FOR THE REST SHOWN ON THIS DRAWING.
7. FOR DETAILS OF HI & LOW VOLTAGE AND LOSS OF POWER ALARMS AT MAIN CONTROL ROOM ANNUNCIATOR CABINET, SEE DWG. SD-2531-15 TABLES 2 & 3
8. BATTERY CHARGER FLOAT AND EQUALIZE VOLTAGES SHALL BE SET AT 133.0 ±5V AND 137.5 ±5V RESPECTIVELY.
9. GROUND DETECTION LIGHTS ARE 10V, 120V RATED. PRESENCE OF FAULT NOT INDICATED UNTIL PB #2 IS DEPRESSED.
10. FOR FUSE SIZE AND TYPE SEE SPEC. 3071-128-EJ.
11. ONLY TWO POLES (N,-) OF 2PC3 POSITION 14 ARE FUSED.
12. DELETED

REFERENCE DRAWINGS:

1. SD-2531-15 INTERNAL W D 130V BDP BATTERY CHARGERS
2. E-2853-08 BDP BATTERY INSTALLATION
3. SD-2534-09 CHARGER 2C-2 INTERCABLING DIAGRAM

□ ABANDONED PER TSR 29963

▲ DENOTES FUSE REDUCER No. 213 USED FOR CKT. #2 OF 2PC3, CKTS. #5, 6 OF 2PC3-5

⊕ DENOTES FUSE REDUCER No. 216 USED FOR CKT. #14 OF 2PC3-17

✱ DENOTES FUSE REDUCER No. 263 USED FOR CKT. #9 OF 2PC3-4, CKT. #3 OF 2PC3-14, CKT. #5, 7 OF 2PC3-13, CKT. #8 OF 2PC3-5.

Fermi 2

UPDATED FINAL SAFETY ANALYSIS REPORT

FIGURE 8.3-11

ONE LINE DIAGRAM 260/130 V DC BALANCE OF PLANT BATTERY 2 PC DISTRIBUTION

DETROIT EDISON COMPANY DRAWING NO. 6SD721-2530-12, REV. AZ

8.4 STATION BLACKOUT (SBO)

8.4.1 Introduction

10 CFR 50, Section 50.63 (Station Blackout Rule) (reference 1) requires that each light-water-cooled nuclear power plant be able to withstand and recover from a station blackout (SBO) of a specified duration. Licensees are expected to have the baseline assumptions, analyses, and related information used in their SBO evaluation documented and available for Nuclear Regulatory Commission (NRC) review. Section 50.63 also identifies the factors that must be considered in specifying the SBO duration and requires that, for the SBO duration, the plant be capable of maintaining core cooling and appropriate containment integrity.

The object of the SBO rule is to reduce the risk of severe accidents resulting from SBO by maintaining highly reliable ac electric power systems and, as additional defense-in-depth, assure that nuclear plants can cope with an SBO for a specific period of time.

The governing criteria for SBO are contained in 10 CFR 50.63. The term "Station Blackout" is defined as the loss of offsite ac power to the essential and nonessential electrical buses concurrent with turbine trip and the unavailability of the redundant onsite emergency ac power systems. However, ac power to buses fed by station service batteries through inverters is considered available along with the dc power to buses fed by the batteries.

8.4.2 SBO Coping Evaluation

Regulatory Guide (RG) 1.155, Station Blackout, (reference 2) describes a means acceptable to the NRC for meeting the requirements of 10 CFR 50.63. RG 1.155 states that the NRC has determined that the Nuclear Management and Resource Council (NUMARC) document NUMARC 87-00, Guidelines and Technical Bases for NUMARC Initiatives Addressing Station Blackout at Light Water Reactors, (reference 3) also provides guidance that is in large part identical to the RG 1.155 guidance and is acceptable to the NRC for meeting these requirements. When reference to NUMARC 87-00 is made, it also includes reference to the supplemental NUMARC letter of January 4, 1990 (reference 4).

The reactor core and associated systems have been reviewed to determine that there are sufficient capacity and capability to ensure that the core is cooled, the reactor coolant system is isolated, and appropriate containment integrity is maintained in the event of an SBO for the required duration.

Systems required for decay heat removal have been reviewed to ensure that those portions of the systems which are required to cope with the consequences of an SBO are available. Effects of nonavailability of support systems such as instrument air, HVAC, and ac power are considered. Condensate storage tank and battery capacities have been reviewed for adequacy.

Combustion Turbine Generator (CTG) 11-1 is designated as an alternate ac (AAC) power source for the plant and is available within one (1) hour to the blacked out unit. In the event CTG 11-1 is inoperable, one of the remaining CTG's can be started using a standby diesel generator. The alternative CTG has the same time availability criteria as CTG 11-1. Plant coping is controlled predominately by class IE dc power and steam driven sources until the

AAC power is available for loading within one hour. The AAC receives its fuel from a fuel tank located near the unit and independent of any fuel tanks for the EDGs.

The Fermi 2 plant has been evaluated against the requirements of the SBO rule using guidance from NUMARC 87-00 except where RG 1.155 takes precedence. The results of this evaluation are detailed as follows.

8.4.2.1 SBO Coping Duration

RG 1.155 and NUMARC 87-00 Section 3 were used to determine an SBO coping duration of four (4) hours for Fermi 2. The specific SBO duration is based on the redundancy of the onsite emergency ac power sources, the reliability of the onsite emergency ac power sources, the expected frequency of loss of offsite power (LOSP), and the probable time needed to restore offsite power. The coping duration is based on the following design characteristics using the NUMARC 87-00 methodology:

1. Offsite power design characteristic group is classified “P2”.
2. Emergency power configuration group is classified “B”.
3. EDG target reliability is “0.95”.

8.4.2.2 SBO Coping Analysis Assumptions

The assumptions used in the coping analysis are as follows:

1. RG 1.155 and NUMARC 87-00 provide general guidance for the SBO coping analysis.
2. The unit is operating at 100 per cent rated thermal power for at least 100 days prior to the event initiation.
3. Initiating conditions will be loss of offsite power and Station Blackout. No design basis accidents, other events, or additional single failures are assumed to occur prior to or during the SBO event.
4. A reactor SCRAM immediately follows an LOSP.
5. Reactor coolant system inventory losses are limited to normal system leakage, losses from blowdown and recirculation pump seal leakages (18 gal/min per pump maximum).
6. Credit is taken for operator actions where appropriate.
7. CTG 11-1 is available for loading within one (1) hour of the SBO event, or CTG 11-2,11-3, or 11-4 is available with blackstart capability using a standby diesel generator, and available for loading within one (1) hour of the SBO event.
8. Equipment needed for the SBO coping duration is available at the site.

8.4.2.3 SBO Coping Capabilities

Applicable plant systems/functions, as identified in RG 1.155 and NUMARC 87-00 guidelines, are available to successfully cope with the SBO event to the extent required by RG 1.155 for the required SBO duration.

The SBO coping evaluation concludes that the various systems and components required for reactor core cooling are available. The CTG 11-1 or alternate CTG with the standby diesel generator in conjunction with the battery capacity has been found to be adequate for the four hour coping duration. The ability to maintain the reactor cooling system (RCS) inventory and containment integrity has been evaluated and confirmed. The effects of the loss of ventilation on equipment needed for SBO has been evaluated. The plant can successfully cope with the SBO event for the required four hour duration with negligible impact on the equipment qualified life and with no impact on the operability of the equipment.

The plant has the capability to cope with an SBO for the coping duration of four hours as discussed below:

1. Capability to provide core cooling is demonstrated by the following:

   a. RCS isolation

      RCS isolation is provided to prevent loss of inventory through normally open lines.

   b. Main steam line isolation

      Main steam line isolation is achieved by automatic closure of the main steam isolation valves (MSIVs) upon loss of offsite power. Manual closure capability of the MSIVs is also available. Controlled steam release capability is available to remove decay heat via the safety relief valves (SRVs) to the suppression pool. The SRVs are self-actuating at the set relieving pressure, but may be operated manually at pressures below the valve setpoint.

   c. High pressure coolant injection (HPCI) system availability

      During SBO, the high injection volume of the HPCI system is not necessary, since loss of coolant accident conditions are not postulated.

   d. Reactor core isolation cooling (RCIC) system availability

      During SBO, a steam flowpath from the reactor and a water flowpath from either the condensate storage tank (CST) or the suppression pool are available to the turbine driven RCIC pump.

      The RCIC system starts and initially feeds to the reactor from the CST until the CST reaches its low level setpoint. Upon reaching this limit, the RCIC suction automatically shifts to the suppression pool. All necessary instrumentation and valves required to assure automatic transfer to the suppression pool are available during an SBO.

   e. CST capacity

Adequate condensate inventory is available for the required coping duration without additional water supply. The inventory in one CST is adequate for the required SBO coping duration of four hours.

f. Batteries and battery charger capacity

To maintain the electrical and instrumentation components needed for core cooling and decay heat removal following SBO, Fermi 2 requires class IE as well as non-IE batteries to support operation of the AAC. A battery capacity calculation has been performed pursuant to NUMARC 87-00, section 7.2.2 to verify that required class IE and non-IE batteries have sufficient capacity to meet Station Blackout loads for one hour. The class IE batteries were determined to be adequate to meet Station Blackout loads for one hour. The non-IE batteries that support the AAC, switchgear and associated functions were determined to be adequate to meet Station Blackout loads for one hour.

The associated battery chargers for the division 1 IE battery and the necessary non-IE station batteries are connected within one hour and power is available to support battery operation in excess of the one hour from the AAC. Therefore the batteries are capable of adequate support of the SBO loads for the four hour coping duration.

g. Compressed air system requirements

No air-operated valves are relied upon to cope with a station Blackout for one hour. The loss of the compressed air system during an SBO would have no impact on maintaining both decay heat removal capabilities and RCS inventory.

The only pneumatic operated valves relied upon to cope with a Station Blackout are the two (2) low-low set relief valves and five (5) ADS Safety Relief Valves (SRVs) that are operated by pressurized nitrogen. Each valve has an accumulator sized to provide five (5) actuations of the valve on loss of the nitrogen supply.

The division 1 Control Air Compressor can be powered by the AAC source and would be available after the AAC is started and connected to the loads within one hour.

h. Instrumentation requirements

Adequate instrumentation is provided to assess the core reactivity, RCS inventory, core cooling capability, decay heat removal capability, and availability of necessary ac and dc power systems.

2. Ability to maintain adequate RCS inventory

As allowed by NUMARC guidelines, recirculation pump seal leakage is assumed not to exceed 18 gpm per pump. A design calculation on CST inventory was performed using the 18 gpm per pump leakage plus the 25 gpm maximum allowable Technical Specification leakage for a total of 61 gpm leak rate. Additionally reactor depressurization was assumed to be required. The results indicate that about 148,420 gallons are required which is less than the volume of water that must be maintained in the CST while in Modes 1, 2 and 3. The RCIC system is capable of providing

sufficient makeup inventory to the reactor pressure vessel to maintain water level. Standby Feedwater system is also available to be powered from the AAC to maintain the reactor water level.

3. Ability to maintain appropriate containment integrity

Appropriate containment integrity is provided during the required duration of the SBO. Valves necessary for containment isolation or which must be operated during the four hour SBO event can be positioned independent of the preferred and blacked out unit class IE emergency power supply. Means of closure include manual operation, dc powered operation, AAC powered operation and air operated valves that fail closed on loss of air, as discussed as acceptable in NUMARC 87-00. Valve position can be determined by either control panel indicating lights or by mechanical valve position indicators at the valves. The system operating procedure on primary containment isolation system has been revised to include actions necessary to verify containment isolation valves are in their appropriate position during an SBO.

4. Effects of loss of ventilation

Those areas of the plant which contain equipment required to operate during an SBO to achieve and maintain safe shutdown have been evaluated to determine their average ambient steady state temperatures occurring during the SBO duration. This evaluation was performed in accordance with the guidelines established in NUMARC 87-00, Appendix F. This evaluation has established reasonable assurance of operability of equipment in these areas during as SBO event.

5. Equipment environmental evaluation

Areas of the plant housing equipment/components required for SBO coping have environmental conditions which are either below the component environmental qualification design limit or are only slightly above the design limit and are well below the minimum generic limit established in NUMARC 87-00.

A plant specific heat up analysis of the primary containment was performed. The analysis is documented in a design calculation and concludes that the containment design temperature of 340 degrees F is not exceeded within the first hour of the SBO event. The HVAC systems for the drywell are not available during the first hour, but will be reestablished when the AAC source is available. The drywell is a dominant area of concern not from an equipment operability concern but to ensure that drywell temperature would not exceed the design limit of 340 degrees F. Fermi 2 has a Mark 1 containment.

The HVAC system for the Control Center Complex which is not identified as a dominant area of concern is not available during the first hour of the SBO event. A design calculation has verified that the Control Room temperature will not exceed 120 degrees F during an SBO event. Since equipment inside instrument and control cabinets are exposed to their own electrical heat loads, doors of cabinets containing energized equipment within the Control and Relay Rooms relied upon to cope with an SBO should be opened within thirty (30) minutes of the SBO event onset, per NUMARC 87-00, Section F.5. An increase in air transfer is provided by opening

cabinet doors, thus, keeping the instrumentation inside cooler. Procedures have been revised to include this requirement for an SBO event.

Equipment in the HPCI and RCIC rooms has been evaluated and determined to be operable at the calculated temperatures of 180 degrees F and 158 degrees F respectively. Both the HPCI and RCIC rooms have equipment area high temperature sensors which are capable of causing isolation of the HPCI or RCIC systems. Calculations show that temperatures will exceed the setpoints of 150 degree F. The systems will isolate unless operator action is taken. Procedures have been revised to ensure that the equipment area high temperature signals are disabled for an SBO event.

Weather hazards such as extreme temperatures, wind, and flooding will not impact components required for an SBO event.

6. Emergency lighting requirements

Emergency lighting is provided in the Control Room to enable station operators to perform the necessary manual actions to cope with the SBO. Adequate emergency lighting is available for those areas of the plant where operator actions and/or ingress or egress is required. Emergency lighting is provided by self-contained battery powered Appendix R lighting and other battery powered lighting provided for the SBO event.

7. Identification of required operator actions and training

Operator actions and training that are required, inside and outside the Control Room, to cope with the SBO event are identified in plant procedures and the operators are trained as applicable on the procedures.

8. Procedure interface considerations

RG 1.155 provides the guidance that procedures and training should include all operator actions necessary to cope with an SBO for at least the duration determined according to RG position 3.1 and to restore normal long term cooling/decay heat removal once ac power is restored. Procedures have been integrated with plant-specific technical guidelines and the emergency operating procedure upgrade program.

9. Diesel generator reliability program requirements

Elements of the EDG program are contained in RG 1.155. An EDG reliability program has been integrated within other existing programs and plant procedures and is consistent with the guidance of RG 1.155, Section 1.2. The target reliability of the EDGs is 95% which is consistent with the plant category and coping duration in the regulatory guide.

10. Quality Assurance

A quality assurance program consistent with the guidance of RG 1.155 is in place for SBO equipment. Quality Assurance activities have been implemented as were determined appropriate for the existing equipment consistent with the guidance in Appendix A of RG 1.155.

8.4 STATION BLACKOUT (SBO)

REFERENCES

1. 10CFR 50.63, Loss of All Alternating Current Power.
2. Regulatory Guide 1.155, Station Blackout, dated August, 1988.
3. NUMARC 87-00, Guidelines and Technical Bases for NUMARC Initiatives Addressing Station Blackout at Light Water Reactors, Revision 1, dated August, 1991.
4. NUMARC Letter, "Station Blackout (SBO) Implementation: Request for Supplemental SBO Submittal to NRC", dated January 4, 1990.
5. Topical Report, Appendix F Topical Report for NUMARC 87-00 (discusses temperature effects of equipment operability) dated October, 1988.
6. NRC-89-0061, "Station Blackout", dated April 17, 1989.
7. NRC-90-0060, "Detroit Edison Response to Request for Supplemental SBO Submittal to NRC", dated March 29, 1990.
8. NRC-91-0086, "Station Blackout Rule Implementation", dated July 17, 1991.
9. NRC-92-0017, "Completion of Station Blackout Rule Implementation", dated February 21, 1992.
10. NRC-92-0068, "Confirmation Response to NRC Supplemental Safety Evaluation on Fermi 2 Implementation of Station Blackout Rule (10 CFR 50.63)," dated May 20, 1992.
11. NRC Letter, "Fermi-2 Conformance to Station Blackout Rule 10 CFR 50.63 (TAC No. 68545) includes SBO Safety Evaluation." dated June 12, 1991
12. NRC Letter, "Fermi-2 - Supplemental Safety Evaluation - Response to Station Blackout Rule (TAC No. M81254)" dated April 9, 1992.
13. NRC Letter, "Fermi-2 - NRC Supplemental Safety Evaluation - Implementation of the Station Blackout Rule (SBO), 10 CFR 50.63 (TAC No. 81254)", dated June 16, 1992.