CHAPTER 12: RADIATION PROTECTION

This chapter describes the radiation protection measures incorporated in plant design and in operating procedures to ensure that internal and external occupational radiation exposures and exposure of the population due to plant conditions, including anticipated operational occurrences, will be as low as reasonably achievable (ALARA) and within all applicable limits. Radiation protection measures include shielding designed to adequately attenuate radiation emanating from sources of significant ionizing radiation, ventilation systems designed to minimize inhalation exposures, operational and administrative controls and procedures including controlled access to hazardous and potentially hazardous areas, and permanently installed radiation-monitoring systems.

In September 1992, the NRC issued Amendment 87 to the Fermi 2 Operating License authorizing a change in the thermal power limit from 3293 MWt to 3430 MWt. The data provided in Chapter 11 for the original power level (3293 MWt) was calculated at 3430 MWt for source terms, activity releases, and doses to the public. As a result of the power uprate, source terms, activity releases, concentrations, and doses have been adjusted linearly to correspond to 102 percent of uprated power, or 3499 MWt. Flow rates, masses, and volumes are also scaled linearly for the uprated conditions. Table 11.1-1 provides the scale-up factors used in Sections 12.1 and 12.2. The source terms shown in Chapter 11 (Table 11.1-2) have not been adjusted for power level because they are derived from the standard annual average design basis release rate of 0.1 Ci/sec at t = 30 minutes.

On February 10, 2014, the NRC issued Amendment 196 to the Fermi 2 operating license authorizing a change in the thermal power limit from 3430 MWt to 3486 MWt, a 1.64 percent increase in thermal power. This Measurement Uncertainty Recapture (MUR) power uprate was performed in accordance with 10 CFR 50, Appendix K and the analyses performed at 102% of the pre-MUR licensed thermal power (3430 MWt) remain applicable at the MUR uprated thermal power (3486 MWt) because the 2% uncertainty is effectively reduced by the improvement in feedwater flow measurement. As such, the source terms, activity releases, concentrations, and doses were not adjusted as a result of the MUR power uprate.

The radiological/ALARA consequences of the addition of a Hydrogen Water Chemistry (HWC) system at Fermi 2 were thoroughly evaluated by Detroit Edison, with the assistance of General Electric personnel. The potential impacts will result from the increased N-16 concentrations in the steam. Detailed high-power radiation levels were measured by survey instruments around the Fermi site prior to the introduction of HWC. These measurements (both inside of major buildings and also outside, in yard areas) were then repeated under the full range of potential HWC conditions, up through high power and maximum hydrogn-injection rates. It was found that the N-16 concentration in the main steam lines increased by a maximum factor of six over the original design basis. Consequentially, radiation levels in many areas throughout the plant also increased. The measurements inside of the major buildings in the RCA showed that (with only two minor exceptions) the HWC radiation levels in normally-accessible areas remained below the original design-basis criteria described in this chapter. This information, along with data from area dosimeter of legal record (DLR) measurements, was then evaluated to assess the impact of HWC injection on:

a. Dose to members of the public, (40 CFR 190)

b. Dose to plant personnel outside of the Radiologically Controlled Area (RCA), (10 CFR 20)

c. Maintenance of ALARA levels during plant operation and maintenance.

The evaluation concluded that due to the large size of the Fermi 2 site, radiological concerns are limited to onsite personnel. Increases in steam-line radiation dose rates will impact activities within the RCA, and it was determined that an additional annual dose of about 5 person-rem would most likely result from the introduction of full-time HWC. Personnel exposures will be maintained ALARA, however, through appropriate compensatory measures. These measures include:

a. Re-posting and locking areas, as needed, in accordance with 10 CFR 20 requirements and Fermi 2 policy

b. Using additional permanent and/or temporary shielding where needed and feasible

c. Temporarily reducing the HWC injection flow during certain maintenance activities

d. Using remote sensing equipment such as closed circuit television, to reduce the need for entry into high radiation areas for inspections and surveillances, when practical

e. Monitoring of personnel as radiation workers, in accordance with 10 CFR 20.

12.1 SHIELDING

12.1.1 Design Objectives

12.1.1.1 Compliance With Federal Regulations

The primary design objective of the plant radiation shielding is to minimize the exposure of plant operating personnel and the general public to radiation due to the reactor, power conversion, auxiliary, and waste processing systems during normal operation, anticipated operational occurrences, postulated accident conditions, and maintenance.

This objective has been accomplished by designing the shielding to

a. Limit exposure to radiation of plant personnel, contractors, and authorized site visitors to as far below the limits set forth in 10 CFR 20 as reasonably achievable for plant operation, including anticipated operational occurrences and maintenance, as recommended in Regulatory Guide 8.8

b. Limit radiation exposure of main control room personnel to as far below the limits in 10 CFR 20 as reasonably achievable, and, in the unlikely event of an accident, to allow habitability of the main control room, as specified in General Design Criterion (GDC) 19 of 10 CFR 50, Appendix A

c. Limit exposures to the offsite general public from direct and air-scattered radiation to within a small fraction of the limits set forth in 10 CFR 20 during

normal operation and anticipated operational occurrences, and to within the limits specified in 10 CFR 50.67 for postulated accident conditions

d. Provide barriers for restricting personnel access to high radiation areas and to assist in controlling the spread of radioactive contamination

e. Protect certain plant components from excessive radiation damage or activation. For example, radiation heating of bulk structural concrete is limited and neutron activation of equipment, piping, and other materials is reduced by the reactor sacrificial shield.

Examples of specific steps in design for representative activities that have been taken or are being taken to incorporate the guidance given in Regulatory Guides 8.8, 8.10, and 1.8, where applicable, are given below or are referenced in other chapters of the UFSAR.

The handling, processing, storage, and disposal of various wastes is described in Sections 11.5 and 11.7. In addition to pool storage for irradiated reactor components, the containers of processed waste that may contribute to a radiation level above normal background can be placed in either the onsite storage building or the remote drum-storage area located within the radwaste building. Mobile air-handling and -filtering units are available for area airborne contamination control (tenting, bag/gloves, room isolation, etc.).

In the activities of routine operational surveillance and instrument calibration, which will be performed by properly trained personnel, a number of design features have been included to ensure ALARA radiation levels. Remote area alarms and process monitor alarms have been installed to provide advance warning of trouble spots, so that protective clothing and expendable equipment are available to perform surveys. As far as is reasonably achievable, offline monitors are used to allow low background use, maintenance, and calibration of the equipment. Consoles have been located in nonradiation zones wherever possible. Area radiation monitors are mounted to allow safe performance of inplace calibration checks with shielded units, and a calibration facility will be provided for the use of shielded calibration sources.

As an example of response to and cleanup following postulated accidents, the potential for accidents was factored into the design of the basement section of the radwaste building. Each basement room containing radioactive liquid tanks is isolated by a curb and watertight doors, designed to completely contain the liquid contents from a simultaneous rupture of all tanks in the room. Each such room also contains an emergency pump that automatically pumps the liquid released in an accident into an appropriate holdup tank. All of the floors and walls (to an appropriate height) are painted or coated to facilitate cleanup and decontamination. In most cases, provisions exist to flush and drain tanks and associated piping, and both floor and equipment drains are built into each room where applicable. Each room can be isolated from the main corridor and from other rooms, from both physical and ventilation standpoints.

Each demineralizer located in the radwaste building is contained within an individual cubicle; the pumps, piping, and valves are contained in an adjacent shielded area, and any manual valve actuators are located in a third adjacent shielded corridor. This permits remote nonroutine operation and cleanup of a demineralizer. Each cubicle is shielded from adjacent

cubicles. The filter-demineralizer retaining screens can be removed from a point above the cubicle with concrete plugs that open to the mezzanine (Figure 12.1-1).

The primary methods used for maintaining ALARA exposures in the maintenance of the radwaste system are the placement of process equipment such as filters, demineralizers, and evaporators in individual cubicles and the separation of components by shield walls. Instruments, controls, and valves, to the extent practicable, are located outside tank and process equipment cubicles. In this way, maintenance can be performed on a component without personnel receiving significant exposure from nearby sources of radiation. In most instances, equipment can be removed from cells either through stepped plugs in ceilings or through (normally blocked) knockouts in walls. Clearance provisions are normally adequate for both in-place maintenance activities and the removal or replacement of components. Most valves, pumps, piping, tanks, and other equipment can be flushed and drained prior to maintenance. Permanent piping is available to drain the contents of any large tank into another appropriate tank located in a different room.

The handling of processed radwaste is covered in Section 11.5. Movement of the radwaste drums from the empty-drum loading point to the discharge point in the OSSF can be performed remotely. Viewing can be done by television, by means of periscopes, and through special shielded viewing windows. Remote drum-transfer facilities are available after discharge from the radwaste building either to temporary storage or to transport trucks.

The gaseous radwaste system (offgas system) was specifically designed to maintain ALARA radiation levels, during both maintenance and operation. Each of the four air ejectors is located in a separate shielded cell, isolated from all other components and other radiation sources. The recombiner system is composed of two completely redundant trains, each housed in a shielded cubicle and separated from each other and all other sources. The chillers, final filters, and sand filters have complete redundance, each unit being contained in a separate, shielded cell. All cells contain knockout walls or overhead plugs for the removal of equipment, and adequate laydown space is provided for the equipment immediately outside most cells.

Instrumentation, controls, and nonradioactive auxiliary systems (e.g., offgas precooler refrigeration units and chiller compressor units) are located exterior to the radioactive cells whenever possible. Separate shielded pipe chases feed the radioactive lines to the separate cells. Hence, when the equipment in a particular cell is shut down for maintenance, little radiation will enter that cell from adjacent radioactive piping. Radioactive lines to the offgas cells have normally been routed so they do not run through any radioactive cells other than the cell they are servicing. The sand filters have provisions for remote drainage into a room below, and their shielded cells can be entered by removing large concrete plugs in the ceiling.

Since the charcoal adsorber beds are passive equipment at ambient temperature and are at a slightly negative pressure, failure and/or maintenance of a charcoal unit has been considered very unlikely. Nonetheless, system availability is protected, since any of the individual units can be bypassed by remote valving operations. Sufficient room has been left between individual charcoal units for portable shielding to be used. A large knockout block is located in the shield wall of the adsorber room for equipment removal. This knockout (and the

adjoining portion of the adsorber room) is an area of quite low radiation level. Also, space has been provided for an additional six to eight adsorber tanks for future need.

A special portable reactor vessel head unit is available for purging the head of gaseous fission products prior to its removal (see Subsection 9.1.4.2.5). During refueling and its associated outage, all air on the refueling floor is exhausted (and monitored) through special exhaust ports at the top of the fuel pool, equipment storage pool, and vessel cavity. A special watertight gate can be installed between the equipment storage pool and the reactor cavity, thus enabling the storage pool to remain flooded when the cavity is drained. The water in the equipment pool, combined with the concrete shielding blocks between the two regions, protects the personnel working in the cavity and at the refueling floor from radiation originating in equipment (e.g., steam separator and dryer) stored in the equipment pool. Reactor vessel laydown space is available on the refueling floor, and the floor has been painted for ease of cleanup and decontamination.

During refueling, special ventilation provisions are available, and air is exhausted through ports at the top of the pools and reactor cavity. Hence, gaseous activity emanating from refueling should be swept out of these ports and will not contaminate the overall refueling floor. Sufficient water thickness has been designed into the pools to reduce to low levels the radiation from the storage of spent fuel in the storage pool. A description of the special fuel-handling equipment is given in Subsection 9.1.4.2. A special lead "chute" is also available to protect personnel in the drywell during maintenance.

A nominal 13 in. has been allowed for the installation of remote operating inservice inspection devices between the reactor vessel and the vessel insulation. Removable metallic reflective insulation is installed on the piping, valves, reactor nozzles, etc. This insulation is designed for quick removal and reinstallation. Concrete surfaces in the drywell are coated or painted for ease of cleanup and decontamination. During refueling, a special lead shielding bridge or chute will be installed in the reactor cavity between the vessel flange and the fuel pool gate. Its purpose is to protect the personnel who may be simultaneously working in the drywell from high radiation levels during fuel transfer (see Subsection 9.1.4.2.7). The sacrificial shield was especially designed to (1) reduce the neutron activation of drywell components and (2) reduce the gamma ray levels from reactor pressure vessel (RPV) shutdown, so that overall radiation levels in the drywell would be ALARA during maintenance and during inservice inspections (Subsection 12.1.2.2.1).

Special shield doors are installed around the important RPV nozzles (Subsection 12.1.2.2.1). These also (1) reduce neutron activation of drywell components for maintenance purposes, (2) provide nozzle access for inservice inspections on an ALARA basis (quick opening and closing of doors), and (3) provide shutdown gamma ray shielding from the RPV sources during shutdown conditions. An area is available near the personnel air lock to the drywell for clothes changing, personal monitoring, etc., both prior and subsequent to drywell entry and maintenance work. A very detailed 16:1 scale model of the drywell and all internals was constructed and was used to design the layout and assembly of the drywell internals for the most advantageous use of space.

In-place work on the control rod drive (CRD) equipment is discussed in Section 4.5. The hot drives are first lowered into a lead-shielded ultrasonic preflush tank, where the majority of the radioactive contaminants are flushed off. This tank has a closed-loop system and filters.

The filters are to be periodically removed and stored in special containers filled with lead shot. The cleaned CRDs will be stored in racks in a special shielded storage room. Concrete shield walls have been located in various areas of the CRD repair facility to minimize direct radiation streaming. The use of these processes and devices will reduce radiation exposures and help to control contamination during overhaul and replacement of parts.

An example of the deliberate and detailed attention to principles of ALARA exposure levels incorporated into the Fermi 2 design is the condensate polishing demineralizers, which are located on the first floor of the turbine building. Each of the eight units is located in a separate, completely shielded cell. Auxiliary equipment, instrumentation, and controls are, when practical, located outside the cells in accessible areas. Each cell has its own air supply and exhaust to prevent cross-contamination between cells.

Radioactive valves (and associated piping) are also located outside the cells in special shielded "valve galleries" adjacent to the demineralizers.

A permanent piping system has been installed for chemically cleaning and flushing the original A-G demineralizer filter elements. No chemical cleaning piping was installed on the newer H-demineralizer because this practice is not utilized. Access to the units is through a stepped shielded manhole in the ceiling, with the shield plugs being removed by an overhead monorail system. When filter elements need cleaning or replacement, provisions have been made for their removal from the demineralizer vessels.

12.1.1.2 Direct Dose Rate at the Site Boundary

The average annual external dose at the nearest point on the site boundary due to normal operation (at the design limit) of the plant, including anticipated operational occurrences and excluding normal vent releases, has been calculated to be less than 8.0 mrem. The largest contributor to this dose is the turbine-generator reheaters located in the turbine building.

For the Independent Spent Fuel Storage Installation (ISFSI), the annual external dose at the nearest point on the site boundary resulting from a fully loaded storage pad has been calculated to be 18.1 mRem.

The dose rate at the site boundary from ^{16}N radiation is less than 8.0 mrem/year (see Section 12.1.3.9). The dose rate from the two condensate storage tanks is 3.6×10^{-3} mrem/year, or approximately 7.8×10^{-4} mrem/year/Ci. Since the radwaste drums are stored inside the onsite storage building, the dose at the site boundary from these drums of stored waste will be negligible (see Subsection 11.7.2.2.2).

12.1.1.3 Dose Rates Within the Site Boundary

Ten main radiation zones have been defined as a means of classifying the occupancy restrictions on various areas within the plant site boundary. These zones are defined in Table 12.1-1. The basis for the values defined in Table 12.1-1 for Zones I through X is that any one individual is limited to a maximum whole-body dose of 100 mrem/week (1.25 rem/quarter) averaged over his occupational work period. This is equivalent to an average of 2.5 mrem/hr for a 40-hr work week. This criterion does not necessarily exclude entry into areas of higher radiation dose rates, since access is determined by an integrated dose to personnel acquired by a combination of exposure time and dose rate. However, the zone

criteria establish the need for and extent of the shielding. A description of each radiation zone defined in Table 12.1-1 is given in Subsections 12.1.1.3.1 through 12.1.1.3.10.

A detailed plot plan defining total plant layout is shown in Figure 12.1-2. The radiation area access zones used in the Fermi 2 shielding design are shown in Figures 12.1-1 and 12.1-3 through 12.1-8 for all areas in the facility for normal operation, and for certain conditions of shutdown and anticipated exposures during a LOCA.

NOTE: The radiation zoning was defined and utilized primarily for the analyses of the overall plant shielding (and HVAC) design and for the locating of all components which could potentially contain radioactivity, and therefore the zoning represents maximum design-basis radiation exposure levels (as noted in the aforementioned figures). As such, these design-basis radiation levels do not necessarily always correspond to the actual operational dose rates in any particular area. The radiation zones and their corresponding dose rates, occupancy times, posting requirements, and 10CFR20 references were set-up or delineated based upon an early/preceding design-basis purpose. Since this zoning was used only for the described original plant design-basis, there is no need or purpose to continuously upgrade this original design-basis section of the UFSAR. Therefore, this Section is kept in its original format.

12.1.1.3.1 Zone I

Zone I is the radiation zone classification for the main control room. This zone is designated as an area in which there are no radiological restrictions. The design dose rate for Zone I during normal plant operation, including anticipated operational occurrences, is 0.3 mrem/hr. Following an accident, the dose rate is such that the integrated whole-body dose does not exceed 5 rem over the duration of the accident.

12.1.1.3.2 Zone II

This zone, with a maximum design dose rate of 0.5 mrem/hr, is a restricted area that can be occupied by plant personnel and authorized visitors on a 40-hr per week, 50 week per year basis, without exceeding a fraction of the 1.25 rem per calendar quarter limit specified in 10 CFR 20.101. Most corridors and other areas requiring frequent access in the turbine, radwaste, reactor, and auxiliary buildings are designed to Zone II classification.

12.1.1.3.3 Zone III

This zone, with a maximum design dose rate of 1.0 mrem/hr, is a restricted area that can be occupied by plant personnel and authorized visitors on a 40-hr per week, 50 week per year basis, without exceeding the 1.25 rem per calendar quarter limit specified in 10 CFR 20.101. An example of this zone is the reactor building corridor area below the new-fuel storage vault.

12.1.1.3.4 Zone IV

This zone, with a maximum design dose rate of 2.0 mrem/hr, is a restricted area that can be occupied by plant personnel and authorized visitors on a 40-hr per week, 50 week per year

basis, without exceeding the 1.25 rem per calendar quarter limit specified in 10 CFR 20.101. For example, an area classified as Zone IV is the reactor building core spray pump cubicles during normal operation of the plant.

12.1.1.3.5 Zone V

This zone, with a maximum design dose rate of 4.0 mrem/hr, is a restricted area, as defined in 10 CFR 20.202, that plant personnel can occupy on a periodic basis. Posting will normally not be required. However, temporary posting will be required if anticipated occupancy in these areas would result in exposures in excess of 100 mrem for any 5 consecutive days. Any areas within this zone remain accessible to plant personnel.

12.1.1.3.6 Zone VI

This zone, with a maximum design dose rate of 8.0 mrem/hr, is a restricted radiation area as defined in 10 CFR 20.202, and is posted with "Caution - Radiation Area" signs. Occupancy is limited, and Health Physics will evaluate on a case-by-case basis whether entry to such areas will require a radiation work permit. Length of stay in these areas is determined by the actual radiation level in the area, the past radiation history of the person entering, and the nature of the radiation.

12.1.1.3.7 Zone VII

This zone, with a maximum design dose rate of 15 mrem/hr, is also a radiation area as defined in 10 CFR 20.202. Posting and access control requirements are identical to those defined for Zone VI.

12.1.1.3.8 Zone VIII

This zone, with a maximum design dose rate of 30 mrem/hr, is also a radiation area as defined in 10 CFR 20.202. Posting and access control requirements are identical to those defined for Zone VI.

12.1.1.3.9 Zone IX

This zone, with a maximum design dose rate of 60 mrem/hr, is also a radiation area as defined in 10 CFR 20.202. Posting and access control requirements are identical to those defined for Zone VI.

12.1.1.3.10 Zone X

This is a radiation area zone with a design dose rate that exceeds 60 mrem/hr. All areas that exceed 100 mrem/hr are posted with "Caution - High Radiation Area" signs, as prescribed in 10 CFR 20.203. Areas that exceed 1000 mrem/hr are either kept locked or are guarded. Occupancy of such areas is limited in both frequency and duration and must be authorized in advance with a radiation work permit. Length of stay in these areas is determined by the actual radiation level in the area, the past radiation history of the person entering, and the nature of the radiation.

12.1.2 Design Description

12.1.2.1 General Shielding Design Criteria

The following design criteria were used to maintain ALARA personnel exposures:

a. Design of shielding and radiation zones was based on either the operating or shutdown condition of a system, whichever is the most restrictive

b. To the extent reasonably achievable, major sources of radioactivity are located in individually shielded cubicles to facilitate safe inspection and maintenance. Labyrinths are normally used to eliminate radiation streaming through access doorways into the cubicles. Thus, maintenance and repair may be accomplished in one cubicle without shutdown and decontamination of equipment in adjacent cubicles. Shielding of cubicles is designed so that work can be performed with ease, minimizing maintenance time and hence radiation exposure

c. To the extent reasonably achievable, instrumentation is located outside shielding walls (where access is unlimited) within limits dictated by the specifications for each particular instrument and associated equipment, component, or process line

d. Shielded valve stations are used when feasible to allow valve maintenance without drainage of associated equipment. To further minimize personnel exposure, remotely operated valves are used wherever practical, and, if manual valves are required, extension stems through a shield wall to a "clean" area are provided for many locations

e. Attempts have been made to run radioactive piping in such a way as to minimize radiation exposure to plant personnel. This involves

    1. Minimization of radioactive pipe routing through areas that must be kept accessible at all times

    2. Avoidance of high-activity pipe routing through low-radiation zones

    3. Use of shielded pipe chases when Items 1. and 2. cannot be avoided

    4. When feasible, the use of sharp elbows, T's and Y's, pockets, and dead legs is kept to a minimum. Lines can be drained, and drain connections are attached to selected pockets and dead legs.

f. When feasible, pipeline and duct penetrations in shielding walls are located in such a way that they are not in a direct line with a major radioactive source, particularly between zones of significantly different radiation levels. Whenever necessary, shielding of the penetration is provided where this cannot be accomplished to reduce radiation streaming into areas occupied by personnel

g. The plant ventilation and drainage systems are designed so that contamination can be either controlled or confined to its place of origin. Health Physics procedures implementing good contamination-control practices further ensure that contamination is not spread to other areas of the plant. Most areas where

contamination may occur are provided with protective coatings to ensure ease of decontamination

h. Health Physics procedures provide for the use of protective clothing to minimize contamination of personnel. Material or equipment being removed from a contaminated area is handled in such a manner as to prevent the spread of contamination. Contamination monitoring of exiting personnel is performed at the access control point or the nearest frisker station

i. Shielding has been provided to permit access to and occupancy of the main control room for normal operation and to ensure that occupancy of the main control room for the duration of the postulated design-basis accident (DBA) will not result in exposures to personnel exceeding 5 rem to the whole body or its equivalent to any part of the body. This design criterion complies with GDC 19 of 10 CFR 50, Appendix A

j. Shielding discontinuities caused by shield plugs, concrete hatch covers, and shield doors to high radiation areas are provided with offsets when necessary to reduce radiation streaming

k. When feasible, equipment deterioration due to cumulative radiation exposure is limited by the selection and use of proper materials as well as by judicious use of permanently installed shielding. Wherever possible, special attention is given to reducing the use of organic and other radiosensitive materials such as electric cable insulation and connectors; solid-state electronics; gaskets and sealants; seats, packings, and diaphragms for valves; and lubricants

l. A number of design features were built into the standby gas treatment system (SGTS) related to minimizing occupational exposures during the removal and replacement of filters. There are three sets of filters in addition to the high-efficiency carbon adsorber section. In the event that any or all filters are contaminated, exposure of maintenance personnel to radioactive material would be limited because of the following design features:

    1. The charcoal in the adsorber section can be drained and disposed of remotely by placing it into containers (55-gal capacity) by means of a pneumatic conveying system. This design feature will minimize radiation exposure during charcoal removal. In addition, with the contaminated charcoal removed, exposure to personnel during the removal of filter sections would be minimized

    2. The prefilter section and final high-efficiency particulate air (HEPA) filter section are at opposite ends of the SGTS filter housing, thereby minimizing exposures by providing the maximum distance between these filters. All filter sections are separated by at least one piece of intervening equipment or the structural framing of the filter housing

    3. Each filter compartment is provided with its own access door. This allows maintenance personnel to go directly to a specific filter section without the need to pass near other filter sections

4. Each filter section is provided with a permanent light fixture to provide adequate internal light to expedite maintenance work. In addition, an individual electrical plug-in receptacle is provided outside each access door.

m. Steps have been taken to minimize and control the buildup, transport, and deposition of activated corrosion products in the reactor coolant and auxiliary systems and in particular to minimize the production of ^{58}Co and ^{60}Co. These include

1. Using material in the primary coolant system with very low nickel and cobalt content except for the use of austenitic stainless steel in the recirculation loops. A discussion and listing of the primary coolant system materials are included in Subsection 5.2.3 and Table 5.2-6
2. Using low-to-moderate flow rates and low temperatures in the filter-demineralizer for the reactor water cleanup (RWCU) system. Both increase the efficiency of capturing radioactive fission products and corrosion products
3. Selecting valves and packing materials that minimize crud buildup and maintenance
4. Using butt-welded connections in lieu of flanged connections on lines 2.5 in. and larger in order to eliminate crud traps
5. Providing drain/flush connections on the valve body of valves 12 in. and larger and on most of the primary system pumps
6. Making it possible that, if necessary, any or all of the primary system can be drained and flushed by making the proper connections. Chemical cleaning and decontamination connections are provided to enable separate decontamination of the emergency core cooling system and reactor coolant system hardware. The recirculation system is equipped with special blank decontamination flanges, as shown in Figure 5.5-2, for decontamination of the recirculation pump and associated hardware. A blank flange on the RWCU return line also enables the feedwater line to be drained and flushed back to the reactor vessel. The piping has been routed to minimize crud traps and dead legs.

n. Steps and design features taken to achieve and maintain ALARA exposures during normal operation will ensure that radiation exposures during decommissioning will also be ALARA. Examples are as follows:

1. The steps taken to minimize the collection and buildup of radioactive crud in piping, valves, tanks, and other equipment include special flush and drain connections and lines and minimal crud pockets. These steps are also used to clean, flush, and drain contaminated systems. In addition, they can be used for decontamination immediately before decommissioning as well as during normal plant operation. A majority of these operations can be performed remotely.

2. Major sources of radioactivity are located in individual shielded rooms or cubicles. Labyrinths prevent radiation from streaming out into the aisleways. Therefore, personnel performing decommissioning work on any major equipment would not be exposed to radiation from other sources. Items like pumps, valves, nonradioactive lines, and instrumentation are normally located outside such cubicles so they can be dismantled without exposure.

   Separate shielded pipe chases are provided for the radioactive lines to the various isolated equipment cubicles. Hence, the residual radioactive sources in pipe galleries would not contribute to the exposure of decommissioning personnel working on adjacent equipment.

3. With a few exceptions, all cells or rooms containing major radioactive sources have built-in provisions for removing such equipment with minimal problems. The cells either have large stepped concrete plugs in their ceilings or else have large stepped block-outs in their walls (normally filled with concrete planks), opening out into major aisleways where sufficient laydown space has been provided

4. Provisions for the remote removal of radioactive contents of equipment internals (such as offgas sand filters, SGTS charcoal, and filter-demineralizers) will reduce decommissioning exposures

5. All concrete surfaces in the drywell are painted for ease of cleanup and decontamination. Special platforms and walkways will be installed in the drywell for speed and ease of movement and consequently to reduce exposures. The sacrificial shield was specially designed to limit neutron levels in the drywell so that long-term neutron activation of drywell equipment and piping would not result in significant radiation exposures when the reactor is shut down

6. Provisions exist to bring power equipment into the main buildings to lift or move major (radioactive) components. These pieces of mobile equipment, combined with the building cranes and monorails, would enable nearly all radioactive items to be removed from the buildings with a minimum of radiation exposure.

Additional descriptive material and diagrams of the design aspects to minimize the exposure to radioactive material are provided in the literature (Reference 1).

To ensure that occupational exposures are kept ALARA, the shielding design was reviewed, updated, and modified as necessary during plant design and construction. Sargent and Lundy and Edison reviewed the shielding design to ensure compatibility with mechanical, ventilation, and monitoring system design.

Building and equipment shielding and layout designs and drawings initiated by the Edison Engineering Design Groups were reviewed by one or both of two shielding evaluation specialists to ensure that occupational exposures will be ALARA.

12.1.2.2 Description of Plant Shielding

12.1.2.2.1 General

Nuclear radiation shielding in the plant is designed and constructed of materials having suitable composition, thickness, and density to satisfy the design dose rate criteria established for the plant and its offsite environs. Radiation shielding is provided so that, in conjunction with appropriate access control patterns, a properly trained operating staff can maintain radiation doses to personnel within the limits specified by applicable regulations during the following modes of plant operation:

a. Normal operation of the reactor, including anticipated operational occurrences

b. Normal shutdown of the reactor

c. Accident conditions.

Provisions have been made for the protection of personnel during access to equipment for the purpose of inspection, preventive maintenance, or repair.

Shielding is provided when necessary to limit nuclear heating of bulk structural concrete, to reduce neutron activation of equipment and materials, and to limit the irradiation of equipment and materials to acceptable levels.

Concrete, steel, and water are the primary shielding materials used in meeting the plant's shielding design criteria. For certain applications, it was necessary to use borated materials (for neutron absorption), special composition concretes, or other special shielding materials. Removable shields, such as floor plugs and block walls, are used where access must be provided for periodic inspection and maintenance.

Whenever feasible, equipment that is used in radioactive service is selected, designed, located, and oriented in such a manner as to minimize the amount of shielding required. A detailed plot plan defining total plant layout is shown in Figure 12.1-2. Radiation zones are defined in Figure 12.1-1 and Figures 12.1-3 through 12.1-8. A general description of the plant shielding in the various buildings containing radioactive process equipment and fluids is outlined below.

12.1.2.2.2 Reactor and Auxiliary Buildings

The reactor building contains four major shielding structures: the reactor sacrificial shield, the drywell biological shield, the main steam line chase, and the spent fuel pool. Portions of the outer (secondary containment) walls also serve as shield walls. The drywell and its contents are shielded so that most areas outside it are accessible during full-power operation.

Within the drywell, sacrificial shielding is provided between the RPV and drywell walls. It serves to protect important portions of the outer drywell space from excessive radiation exposures and heating during operation. After shutdown, it provides protection from the RPV radiation for plant personnel performing inservice inspection, maintenance, and repair of drywell equipment and components. The sacrificial shield minimizes activation of drywell materials near the reactor core and, together with the drywell biological shield, it protects the general reactor building work areas during normal operation.

The following three criteria have been used in designing the sacrificial shield:

a. The energy flux (neutron plus gamma) incident upon the inner face of the sacrificial shield wall is less than 5 x 10^{10} MeV/cm^2/sec

b. The thermal neutron flux emerging from the sacrificial shield is less than 2 x 10^5 neutrons/cm^2/sec so that excessive activation of steel components in the drywell is prevented

c. The total full-power dose rate in the drywell (outside of wall) should not exceed 100 rad/hr in order to reduce the integrated dose to certain sensitive-material components in the drywell.

Table 12.1-2 provides a summary of the sacrificial shield design bases.

During reactor shutdown, the radiation criterion is that the drywell dose rate from radiation through the sacrificial shield 1 day after shutdown should be less than about 30 mrem/hr. Two sources contribute to the drywell radiation field during shutdown: those sources internal to the sacrificial shield, and piping and equipment in the drywell. The internal sources arise from the delayed gamma rays emitted by the fuel and from the activation of structural components such as the RPV or sacrificial shield. The boration of the concrete reduces the activation of the sacrificial shield significantly, enabling the 30-mrem/hr level to be met. Contact radiation levels on much of the piping and equipment are likely to be in the 20 to 1000 mrem/hr range, most of which comes from radioactive depositions in the drywell piping. The thermal neutron flux limit imposed during operation is low enough to minimize the activation of steel in the drywell.

Recirculation piping penetrations of the sacrificial shield wall are shielded from the reactor core so that access to the drywell is provided during shutdown. All major penetrations in the region bounded by 9 ft above the core centerline to 16 ft below the core centerline contain special shielding doors. In the region of the drywell adjacent to those doors, the dose rate during operation is from components of the recirculation system as well as from the core. For local hot spots such as these openings, an increase of a factor of 10 in the neutron flux (that is, a flux of 2 x 10^6 neutrons/cm^2/sec) is assumed to occur in that vicinity in the drywell. The adopted shield door design consists of a combination of steel and a neutron-attenuating material to reduce the streaming of gamma radiation, as well as to limit the streaming of thermal neutrons to within the hot-spot limits.

The drywell biological shield is designed to limit the radiation level from the reactor core and from equipment in the drywell to the predetermined zone levels established for accessible areas during full-power operation. Table 12.1-2 summarizes the biological shield design criteria. In addition to serving as the basic biological shielding for the reactor system, this concrete structure also provides a major mechanical barrier for the protection of the RPV against potential missiles generated external to the primary containment. Whenever feasible, the penetrations through the biological shield are positioned so that they are not in a direct line with the core or major sources of radioactive equipment in the drywell. The penetrations are either terminated in shielded cubicles, located at very high elevations, or furnished with shielding collars or disks where necessary to further reduce radiation levels in the accessible areas.

The shield design criteria for the rest of the reactor and auxiliary buildings are defined in Table 12.1-3. This table lists the design conditions for each pertinent source area; that is, full- power operation (maximum activity for normal operation), shutdown, testing, and LOCA.

It should be noted that the Maximum Design Level in Protected Area column given in Table 12.1-3 represents the maximum- radiation-level shield design in the shielded area, and is a composite of dose rates resulting from radiation levels generated by several shielded sources. Therefore, the actual design criteria on a specific wall from a particular source cell will usually be less than the maximum values given in Table 12.1-3. This also applies to all other tables with a similar column. The Identification Number column given in Tables 12.1-3 through 12.1-5 is defined in Table 12.1-6.

The shielding has been designed and arranged to ensure that, for the area above the RPV flange, sufficient water shielding is provided above the core and the fuel pool to permit access for refueling operations. The shielding requirements have been based on maintaining a sufficient depth of water above the fuel at all times to limit the dose rate to the operators. A special lead-lined fuel-transfer bridge or chute is used to protect personnel working in the drywell when spent-fuel assemblies are being transferred between the core and the spent-fuel storage pool.

A special drywell radiation monitor is provided as a part of the area radiation monitor system to provide radiation protection for personnel working in the drywell during fuel-transfer operations. The monitor and alarm are hand carried into the drywell and plugged into the fixed connector whenever the drywell is opened for maintenance.

Since some areas adjacent to the refueling and fuel storage pool structures are accessible, the pool-wall concrete has been designed to provide the required attenuation. The concrete pool shielding has been adequately designed for both fuel storage and fuel transfer operations.

During normal fuel transfer, the fuel element is covered at all times by a pool of water that serves as a radiation shield. When fuel is transferred from the reactor cavity to the fuel pool, it crosses the narrow transfer canal. It takes about 24 sec to reach the fuel pool, where it is lowered further down into water. During the short time it is in the transfer canal, there is still sufficient water (approximately 7ft) above the actual fuel portion of the fuel assembly to furnish adequate shielding and to maintain low radiation levels at the operating bridge. Although these dose rates will be somewhat higher than when the fuel is lowered further into the storage pool, they will not be of significance. Likewise, there is sufficient water (approximately 5 ft 3 inches) above the actual fuel portion of the fuel assembly to furnish adequate shielding and to maintain low radiation level at the Reactor Cavity Work Platform used for In-service Inspection of the vessel and other outage related activities. Radiation levels from fuel handling to other personnel located elsewhere on the operating floor will be much lower than levels on the bridge.

Since the RWCU system filter-demineralizers are a radiation source during operation and shutdown, they have been located in separately shielded rooms so that each can be maintained while the others are in operation. Valves and instruments have been located outside the demineralizer cubicle. During operation, access to the remaining cleanup equipment (except for the pumps) is normally not required, but shielding requirements were based on location and the need for access to adjacent areas.

The main steam line pipe tunnel shielding has been designed to adequately reduce ^{16}N gamma radiation, emanating from the steam lines during normal full-power reactor operation, to the proper design levels.

A contaminated-equipment storage room, located in the turbine building, is used for the storage of low-activity miscellaneous pieces of small equipment. The walls serve more as a physical barrier than as a radiation shield.

12.1.2.2.3 Turbine Building

The radiation levels existing during plant operation, as well as those experienced during shutdown, were considered in determining shielding requirements for the turbine building. With the main exception of the offgas charcoal units and filters, the major radiation source considered has been the ^{16}N isotope. Figures 12.1-1 and 12.1-3 through 12.1-8 define the access zones used in the turbine building shielding design. The areas are zoned according to their expected occupancy by plant personnel and their design-basis radiation exposure levels under normal plant conditions. Shielding is provided around the following areas, and access to these areas is generally not permitted during full power operation:

a. Main condenser-hotwell area

b. Reactor feedwater system heaters, drain coolers, and associated piping

c. All main steam, extraction steam, and drain piping

d. Condensate demineralizer system equipment and piping

e. Steam-jet air ejectors and piping

f. Gland seal condenser and vacuum pump systems and piping

g. Heater drain pumps

h. Regions around the turbine, reheater separators, and associated steam and condensate piping

i. Reactor feed pump turbine systems and piping

j. Offgas delay lines

k. The offgas combiners, charcoal delay beds, filters, and associated piping and equipment.

As can be seen in Figures 12.1-1 and 12.1-3 through 12.1-8, limited access is allowed to a few areas during full-power operation. Access to the crane and to the turbine floor inside the turbine reheater shielding walls is administratively controlled during reactor operation, by use of locked access doors.

Since the air ejectors are a high radiation source, each is provided with separate shielding to permit maintenance access to the cubicles not in operation. Offgas holdup piping is also shielded. The two recombiner cells are separately shielded to permit limited access to the cell that is shut down while the other is operating. Since access for filter replacement is possible, shielding is provided for the offgas filters, with consideration given to draining the radioactive sand from these filters and separately shielding each filter for maintenance or removal.

The condensate filter-demineralizers are also shielded to accommodate access to adjacent areas. Access to the filter- demineralizers is restricted unless adequate decontamination procedures are taken. Access to valves, pumps, and instrumentation is generally made available by locating this equipment in outer shield cubicles.

The condensate is held up in the hotwell long enough to reduce the dose rate from ^{16}N and ^{19}O to below 1 mrem/hr (normal water chemistry) at points adjacent to the piping. Even though a 2-minute holdup time is sufficient for this purpose, the hotwell is designed for a nominal holdup time of 4 minutes (see Subsection 10.4.1.1.5). However, even though these lines are not normally shielded, the condensate storage tanks are provided with a barrier to prevent close access.

The design criteria for the turbine building shielding design are provided in Table 12.1-4. Though this table does not indicate the design limits for turbine shield design as applicable to skyshine (^{16}N), Subsection 12.1.3.9 describes the pertinent results of skyshine analysis. These data show that the turbine building shielding adequately reduces all direct and skyshine radiation to ensure that both onsite and offsite doses are maintained ALARA.

12.1.2.2.4 Radwaste Building

The radwaste building contains a complex arrangement of settling tanks, filters, demineralizers, evaporators, solidification equipment, and holding and storage tanks of various types and kinds. These serve to remove the impurities (soluble, nonsoluble, radioactive, and nonradioactive) from water collected in floor and equipment drains throughout the plant and from the backwash of reactor water and condensate filter-demineralizer purification systems, prior to reactor recycle usage or ultimate disposal through the liquid- or solid-waste disposal systems. Almost all of the entire radwaste system uses batch processing of liquid volumes. Because of the system complexity, a wide variance in radioactivity levels is encountered throughout the radwaste system. In fact, the activity level at a particular location can vary considerably, depending on the conditions and mode of systems operation. For conservative shielding design calculations, therefore, the condition giving maximum activity levels of each component was first identified. The activity concentrations used in each major shield design effort for the radwaste building are covered in more detail in Subsection 12.1.3.

Table 12.1-5 defines the specific shield design criteria for the radwaste building. Figures 12.1-3 through 12.1-5 define the access zones and the major components. The shielding is designed to maintain the radiation level below 0.5 mrem/hr in the radwaste control room and in the operating aisles of the solid-waste preparation areas. The areas surrounding the radwaste equipment are protected according to the necessary access requirements. The liquid radwaste system is operated remotely from a control panel in the radwaste control room.

As previously indicated, the shield design is based on radiation resulting from the processing of corrosion products and/or fission products resulting from substantial fuel leakage (Subsection 12.1.3). The design is such that when certain low-frequency types of fluid transfer operations are to be performed, slightly higher radiation levels and limited-access restrictions will apply to certain areas that are normally Zone II access areas.

The primary function of the waste surge tank is to receive overflow from the waste clarifier. The waste clarifier is full during normal operation and displaces a volume equivalent to the

influent directly to the waste surge tank. The principal inputs to the waste clarifier are the decants from the RWCU and condensate phase separators as well as the centrifuge decant. As these streams enter the waste clarifier, undissolved solids settle out and liquid within the clarifier is displaced to the waste surge tank. The waste surge tank can also be used for storing the waste collected in the radwaste emergency sump in the unlikely event of rupture of either the floor drain collector or waste collector tanks. The principal activity within the waste surge tank is therefore from the phase separator and centrifuge decant water.

Components such as waste collector and floor drain collector tanks are grouped in one common area. These areas contain only tanks and piping and require infrequent access. Resin storage and concentrated-waste storage tanks are located in another area. Access to these areas is not normally required.

Demineralizers and filters have been separately shielded so access to one will not require draining of the others. There is little need for access to the demineralizers, but the filters may require periodic maintenance.

12.1.2.2.5 Main Control Room

The main control room is located in the auxiliary building so that accessibility is normally unrestricted. The shielding provides for normal radiation levels below 0.3 mrem/hr. Advantage has been taken of the shadow shielding from other structures.

Further, the main control room shielding has been designed for the maximum design accident condition so as to allow continuous main control room occupancy during the course of an accident. The regulation followed for the shield design was GDC 19 of 10 CFR 50, Appendix A. As a result, wall, floor, and ceiling concrete thicknesses are provided (as shown in Figures 12.1-9 and 12.1-10) to adequately attenuate sources of direct radiation. The design of the main control room shielding was such that the predominant sources originate during an accident condition rather than during normal plant operation. The shielding design features were reevaluated using Alternative Source Terms and with some additional detail. As a result, calculated doses are substantially lower than originally determined. See Appendix 15A for details.

12.1.2.2.6 Other Plant Areas

Those portions of the service building and all other yard buildings which are fully accessible will be maintained so that no person can receive a radiation dose rate of greater than 0.5 mrem/hr. Access to other portions of these buildings will be controlled, in order to assure all personnel radiation exposures will be ALARA.

12.1.2.2.7 Component Cubicles

Component and equipment cubicles containing radioactive material are designed not only to limit radiation levels in corridors and other adjacent areas requiring frequent access (Figures 12.1-1 and 12.1-3 through 12.1-8), but also to ensure that the maximum radiation level in the cubicles from adjacent cubicles containing radioactive material does not exceed 8 mrem/hr (normal water chemistry). There are some areas or cells in which the maintenance dose criteria were set significantly lower than 8 mrem/hr. The actual design dose rates are shown

in Tables 12.1-3 through 12.1-5. This concept means that when the lines and equipment in a particular normally radioactive cubicle are shut down and drained for maintenance purposes, the maximum radiation level from outside sources will produce radiation levels that will not exceed 8 mrem/hr in the cubicle containing the drained equipment. For this particular phase of the shield design, it was assumed that the rest of the plant remained at full-power operation.

12.1.2.2.8 Penetrations, Ducts, and Voids

Normally, a large number of various sizes and types of penetrations exist through the bulk shielding walls surrounding radioactive components. There are mechanical, doorway, instrument and lighting, electrical, ventilation and heating, process piping, and drain line penetrations. As is true in the shield design of all plants, these penetrations represent violations of the bulk shield and consequently represent potential sources of high-level localized radiation streaming.

When necessary, these penetrations, ducts, and other voids in shields are designed so that the radiation streaming through such discontinuities is minimized. The design also ensures that the general dose rate in each plant area, including contributions from radiation streaming, satisfies the design dose rate for that area's radiation zone designation. The shield designers worked closely with other design groups to meet the above criteria. All important proposed penetrations of a shield wall were approved by the shield designer before they were finalized, and appropriate calculations were performed by the shield designers when necessary.

When feasible, penetrations of shield walls, such as pipe and duct penetrations, are located in such a manner that a direct shine from major sources of radiation is minimized. Large empty pipes or ducts penetrating the shield into accessible areas are provided with additional concrete, steel, or other shielding where required. When necessary, penetrations are located sufficiently high above the floor (generally greater than 10 ft) to minimize shielding requirements and personnel exposure in adjacent accessible areas.

Shield discontinuities include such items as concrete hatch covers, plank walls, block walls, shielding doors, and access labyrinths into areas of high radiation. Access labyrinths into rooms containing highly radioactive equipment are designed in such a manner that direct shine through the offset passage to outside accessible areas is eliminated. Where necessary, the equipment is shielded in all directions, including the access passage, with the same equivalent thickness of shield as in the solid shield walls. During normal operations, the access labyrinths are provided with barriers for personnel access control. The labyrinth designs are such that the dose rate at the outer surface of the barrier locations would not be greater than that outside the adjacent bulk shield walls.

Shielding discontinuities are normally designed with offsets in the gap between the movable section and the fixed shield so that radiation streaming is reduced. Wherever possible, gaps are positioned to eliminate a direct line with the radiation source. The tolerance or clearance between the movable section and the fixed shield wall is designed to be as small as practicable.

A general description of the method used for handling such penetrations in the shield design of the Fermi 2 plant is given in the following paragraphs. The design intent was to limit the

total radiation passage through shields (that is, the sum of the bulk shield dose rate and penetration dose rate) to the levels given previously in Subsection 12.1.1.

It is desired that personnel working in an operating area for a 40-hr week receive an average dose rate no larger than that specified (usually 0.5 mrem/hr). The Fermi 2 shield design (normal water chemistry) used is as follows:

a. The general area dose rate through the bulk shield was kept somewhat less than 0.5 mrem/hr (approximately 0.2 - 0.4 mrem/hr)

b. Where possible, the combined dose rate (bulk radiation plus streaming) at all floor locations below an elevation of approximately 7 ft (assumed man's head height), taking into consideration the penetrations important to that location, was kept less than 0.5 mrem/hr.

12.1.2.2.9 Valve Operating Stations

Manual valve operating stations for pipelines containing highly radioactive material are designed with the valve body and all piping enclosed in a shielded cell, with only the valve's operating rod extended through the shield wall. When possible, these penetrations are located overhead so that radiation streaming does not shine directly on personnel in the operating aisle. The operating rod, which is a solid steel shaft in most cases, helps attenuate radiation streaming through the penetration. In cases where the quantity of valves requires a large number of penetrations, the valve operating station is isolated from the personnel access corridor by a shield wall, and is declared a limited-access area.

12.1.2.2.10 Shield Materials

Advantage was taken of the shielding properties of structural walls and of distance, whenever possible. The material used for biological shielding throughout the plant is reinforced concrete with a density of approximately 150 lb/ft^3. Other materials, such as steel and lead for gamma shielding and boron or hydrogenous materials for neutron shielding, are used in special instances. Wherever possible, walls that were installed primarily for structural purposes are also used to provide shielding. Whenever cast-in-place concrete was replaced by concrete blocks or special offset shield planks, the design ensured protection on an equivalent shielding basis.

No federal regulations similar to those established for the protection of individuals exist for materials and components. Whenever possible, materials are selected on the premise that their predicted radiation exposure during the design life of the plant would not cause significant changes in their physical properties that might adversely affect their operation.

12.1.2.3 Shield Design Calculations

12.1.2.3.1 General

Presented below is a summary discussion of the analyses performed to define the required shield thickness for the various components containing radioactive material. Included is a general description of the analytical tools used in the analyses, the sources and models used

in the analyses, and the required shielding thicknesses. All shielding is designed to ensure that the specific design criteria defined in Tables 12.1-2 through 12.1-6 are met.

For a given process system, consideration of each of its various modes of operation is used to determine the highest expected dose rate to personnel and/or equipment. The shield or series of shields were then designed to attenuate radiation resulting from this design-basis operational mode. The source of radiation (Subsection 12.1.3), the technical description of the nuclear steam supply system, and the descriptions of the operation of the components of each radioactive process system are all used in determining the final shield design.

Shielding that protects areas during normal operation, anticipated operational occurrences, and following DBAs is designed such that adequate protection is provided for the most severe case. Each radioactive source and its shield is modeled mathematically to represent the actual configuration as nearly as possible or as closely as necessary.

To design the sacrificial shield, the one-dimensional transport code ANISN (Reference 2) was used to account for the migration and production of neutrons and gamma rays from the reactor core.

The DLC-9 coupled neutron and gamma ray cross-sectional data (Reference 3) were originally used with the ANISN code to enable all production and loss mechanisms for both neutrons and gamma rays to be handled in a single calculation, and subsequently the DLC-23/CASK coupled cross-sectional set (Reference 4) was used to verify the original calculations.

All other shields are designed for gamma ray attenuation by the standard point attenuation kernel (buildup factor, exponential attenuation, and geometry factor) numerically integrated over the volume of the source. The buildup factors and gamma ray attenuation coefficients were obtained from published nuclear data (for example, References 5 through 10). These data were used in the ISOSHLD-III computer code (Reference 11) and also in various hand calculations that were made. Direct transmission of gamma radiation through bulk shielding was also calculated by CAI-KAP, a modification of the QAD (Reference 12) point kernel attenuation program, written for the IBM 1130 computer. Some of the modifications were made in order to fit the large program into the small machine. For instance, CAI-KAP has no capability to calculate neutron attenuation. The program will accommodate geometries of 50 zones defined by 50 boundaries, up to 15 materials, and 30 gamma energy groups. The program also has the capability of automatically preparing the detailed source description on the basis of an input gross source description.

Scattered radiation from labyrinths and penetrations was analyzed by the albedo or Monte Carlo method (References 13 and 14). As mentioned in Subsection 12.1.2.2.8, penetrations are normally located so that no direct path of escape exists for direct radiation. Thus, the only method of radiation escape from the labyrinth without shield attenuation is through scatter. Wall penetrations are located as much as possible above head height, and the use of wall or floor penetrations that run between radioactive regions and unlimited-access areas is minimized.

The radwaste system modification resulted in the building of new shield walls for new equipment, supplementing existing walls with additional shielding for new equipment, and reanalyzing existing walls where new equipment was installed or where the operating

function of existing equipment had changed. In addition to the walls, the floors, ceilings, shield doors, and labyrinths were evaluated. These analyses were done using four shielding codes: KAP VI, CYLDOSE, SCAP, and NUSALB.

KAP VI (Reference 15) is a point kernel code used for complex geometries describable by quadratic surfaces. This was used for all of the larger pieces of equipment. CYLDOSE (Reference 16) is a code for calculating linear attenuation, scatter buildup, and resulting tissue dose rate from cylindrical gamma ray sources. CYLDOSE was used primarily for piping shielding analyses with some usage for smaller components. SCAP (Reference 15) is a point kernel code using energy-dependent single or albedo scatter methods to calculate radiation levels at detector points located within complex geometries describable by a combination of quadratic surfaces. SCAP was used where complex gamma ray scatter-radiation geometries were encountered. The NUSALB code (Reference 17) determines ground backscatter according to the albedo technique through the summation of differential back-scatter doses by means of the appropriate differential albedos. This code was used for the simpler scatter analyses.

Some of the basic assumptions used in the shielding design are as follows:

a. The shielding in the turbine building is based on ^{16}N gamma radiation

MeV/Photon	Photons/Disintegration
2.75	0.01
6.143	0.69
7.112	0.05

b. The original shielding design of the radwaste building walls was based on an average gamma ray energy of 1.5 MeV/photon. The walls that have been added or supplemented as a result of the newer system installation are based on the calculated gamma ray energy spectrum estimated to exist in the components being shielded. Previously designed walls that are being used to shield new equipment or equipment for which the function has been changed or modified were reevaluated on a case-by- case basis using the calculated gamma ray energy spectrum within the component being shielded

c. The magnitudes of all sources of radiation are based on failed fuel operation with the following source terms calculated at 102 percent of 3430 MWt (3499 MWt) (see Chapter 11):

   1. A noble gas release equivalent to 100,000 μCi/sec after a 30-minute holdup

   2. Corrosion and fission product concentration in the reactor water consistent with the values presented in Tables 11.1-2 through 11.1-6.

d. Credit is normally taken for self-absorption within a given source geometry

e. Credit is normally taken for holdup of ^{16}N in various system components

f. Design-basis dose rates in aisles or outside cubicles containing multiple sources are based on the sum of the direct radiation emanating through all adjacent

cubicle shield walls (including both floors and ceilings). The shielding for cells is designed so that the maximum radiation dose rate in operating areas outside the cells would be no more than 0.5 mrem/hr (Zone II) from all sources under normal operating modes (normal water chemistry). This is the total combined dose rate from all nearby cells, any piping running through the operating area, and from any miscellaneous sources.

Additional information concerning the shield designs in each building containing equipment for processing radioactive material is given in Subsections 12.1.2.3.2 through 12.1.2.3.5.

12.1.2.3.2 Reactor and Auxiliary Building Shield Design

To ensure that the specific design criteria are met in the reactor building, the RPV is surrounded by a 7-ft-thick biological shield and a 21.25-in.-thick sacrificial shield. Computerized discrete ordinates techniques (that is, the ANISN code) were used to calculate the dose rates outside the biological shield. Table 12.1-7 defines the multigroup coupled neutron and gamma flux as calculated outside the RPV. These data served as the basis spectrum for the sacrificial and biological shield design.

During the course of the shield design, it was found necessary to use borated concrete for the central portion of the sacrificial shield. This borated section extends from 17 ft below the core centerline up to 12 ft above the core centerline. The boration is accomplished by the addition of 6 weight-percent boron frits to the concrete mixture. The frits contain approximately 16 weight-percent natural boron. As previously mentioned, the boration of the concrete reduces the activation of the sacrificial shield significantly, enabling the 30 mrem/hr requirement to be met 1 day after shutdown.

Table 12.1-8 summarizes the shielding design for the important areas in the reactor and auxiliary buildings. This table summarizes

a. The area being shielded

b. The equipment in the shielded cell

c. The operating condition for the source determination that was subsequently used for the shield design

d. The source strength, expressed in curies, in the component/room being shielded

e. The basis calculational source geometry used for the shield design analysis

f. The particular wall or shield location on the cell

g. The shield wall thickness as constructed

h. The radiation level, expressed in mrem/hr, used as a shield design basis for the wall both at the outer wall surface and in the general area around the wall.

12.1.2.3.3 Turbine Building Shield Design

Table 12.1-9 summarizes the turbine building shield design. This table summarizes the data in the same manner as does Table 12.1-8. However, dose-rate estimates due to skyshine have

not been included in either of these tables. Further discussions concerning skyshine dose-rate calculations are presented in Subsection 12.1.3.9.

12.1.2.3.4 Radwaste Building Shield Design

Table 12.1-10 summarizes the shield design for the radwaste building. The pertinent items of design as described for Tables 12.1-8 and 12.1-9 are included in this table.

Concrete shielding is used exclusively throughout the radwaste building for bulk shielding, except for several instances where steel wall inserts are used and several instances where tanks are shielded with steel and/or lead shot because of space considerations. There are also several steel shield doors. The general procedure for determining the bulk (wall thickness) shielding requirements for component cells was to use the maximum total activity buildup together with data on component process fluid volume and geometry, and then to reduce the actual component to an appropriate idealized point, line, cylindrical, or disk radiation source for the shielding calculations. Also taken into consideration was the self-shielding effect of the process fluid, where applicable, and radiation buildup due to scattering in the shield walls. In addition, the following nuclear data, ground rules, and assumptions were used:

a. The actual radionuclide inventories in each of the radwaste system components have been calculated. Based on the radionuclides present and the specific activities of those nuclides, a specific energy spectrum has been determined and used for the shielding calculations. This spectrum could be different for each component in the radwaste system

b. The piping inside the cells that contain large sources (such as tanks) or sources where radionuclide inventories can become concentrated (such as filters and demineralizers) has not been considered for the bulk- shielding calculations. This differs from the practice followed in many of the turbine and reactor building cell calculations. However, it is a valid assumption for the radwaste building because of the following:

    1. The volume (size) of the process lines to and from radwaste components is extremely small compared to the component fluid volumes

    2. The radwaste system uses batch processing (compared to continuous processing in the turbine building), and the lines are therefore normally either empty or filled with clean flush water

    3. As opposed to the situation often encountered in the turbine and reactor buildings, there are no significant density differences (due to temperature changes) or specific activity ($\mu Ci/cm^3$) differences (due to either dilution or radioactive decay) between the process fluid in the lines and that in the tanks where cells contain only pumps; however, the piping in those cells is used for bulk-shielding calculations. It is a conservative assumption to consider a pump to be a section of the piping through which it pumps fluid. Compared to the piping within a cell, the volume of the source within a pump is usually very small. The piping must, therefore, be considered.

c. In certain instances of offnormal operation, the Zone II dose rate could be exceeded in some areas. Examples of offnormal operations are the following:

   1. Use of operating modes following tank ruptures
   2. Abnormal operating modes used when components are shut down for maintenance and must be bypassed
   3. Operating modes used during filter or demineralizer malfunction
   4. Abnormal tank-drainage operations.

   It should be emphasized, however, that there are only a limited number of anticipated offnormal operating modes that will result in Zone II radiation dose rates being exceeded in operating areas

d. The shielding for common walls between adjacent shielded cells is designed so that the radiation dose rate inside a cell shut down for maintenance is less than 8 mrem/hr (Zone VI) due to radiation from sources in adjacent cells under normal operating modes. As implied by Item c., the offnormal maintenance dose rate inside such a cell could exceed the Zone VI criteria in certain rare instances.

12.1.2.3.5 Main Control Room Shield Design

As previously described in Subsection 12.1.2.2.5, the main control room is designed so that accessibility is normally unrestricted and, following a postulated accident occurrence, personnel exposure will not exceed 5 rem TEDE as specified in 10 CFR 50.67.

In particular, the shielding in the main control room is designed to protect its inhabitants following a LOCA, as described in Regulatory Guide 1.183. For the LOCA, the fission products that are released from the fuel are assumed to be transported through the primary and secondary containments and entrained on the SGTS filter. LOCA sources are determined using RADTRAD (Reference 24) models with design basis core source terms, credited removal mechanisms, and transport parameters. Uniform mixing in secondary containment is assumed when evaluating secondary containment gamma shine, and 100 percent filter efficiency is assumed when evaluating SGTS filter source terms. RADTRAD calculated time dependent compartment activities are time integrated and then evaluated using MicroShield 5.05 (Reference 25). Sources considered are the primary containment, the reactor building, a standby gas treatment system filter, and an environmental plume outside of the control room shielding. Shielding is provided that is equivalent to the following:

a. The total floor thickness between the main control room and torus area is effectively 8 ft 4 in., as shown in Figure 12.1-9

b. The roof of the main control room is 1 ft thick below the air conditioning equipment room (effectively 6 ft 6 in. thick, including the auxiliary building roof), and 5 ft thick below the SGTS (effectively 10 ft 6 in. thick including the auxiliary building roof)

c. The outside (north) wall of the main control room is 2 ft thick in order to provide shielding of personnel from the overhead plume

d. The wall between the main control room and secondary containment is 4 ft 4 in. thick. Therefore, the dose to personnel from radioactivity in the secondary containment is reduced.

Shielding walls are used to accommodate other design criteria; for example, to provide missile protection. In some instances, therefore, the slab thickness may be governed by criteria other than shielding requirements. Further details on the estimated personnel exposure during a LOCA are provided in Appendix 15A.

12.1.2.4 Inspection and Testing

Inspection and testing of the plant shielding is conducted using ANSI Standard N18.9-1972 as a guide to verify that the shielding performs its function of reducing radiation to design levels. During the initial power operation, radiation surveys are made to identify and correct any defects or inadequacies in the shielding that might affect personnel exposures during normal operation and maintenance of the plant. Surveys consisting of gamma and neutron monitoring, as appropriate, will be performed at various power levels (typically 0, 25, 50, and 100 percent power) as the reactor is initially increased in power.

12.1.3 Source Terms

12.1.3.1 General

The shielding design source terms are based on the three general plant conditions of normal full-power operation, shutdown, or design-basis events. The shield design for normal operation and anticipated operational occurrences is based on design radiation sources. These sources provide a rational basis for design. The source data assume plant operation is at maximum design power, with a noble gas release rate from the core equivalent to 0.1 Ci/sec after 30 minutes decay. Concentrations in the reactor water are based on a fission product equilibrium halogen concentration as defined in Section 11.1. Concentration of other fission and activation products is based on information defined in Section 11.1. The activities of these sources are considered to be maximum values, although it is not anticipated that the plant will normally operate at these high levels. Later, Hydrogen Water Chemistry conditions were also examined and factored in.

Three types of radiation sources occur in the plant: primary radiation from the reactor core, secondary radiation resulting from nuclear reactions between the primary radiation and the reactor environment, and release of radioactive materials from the reactor core to the coolant. During normal plant operation, secondary sources and released radioactive materials are transported in either the reactor coolant or main steam to process equipment in the plant.

The source intensity in equipment and pipelines handling radioactive fluids is determined from that in the reactor water or reactor steam by considering the processes that the reactor water or steam has undergone (dilution, filtering, demineralization, delay, or change of phase) prior to entering the equipment or pipe.

Tables 12.1-8 through 12.1-10 summarize the estimated source terms in the reactor and auxiliary building, turbine building, and radwaste building used for the Fermi 2 shield design for cubicles and components containing radioactive material. These sources are based on the

originating source terms provided in Chapter 11, and cover the worst-expected design condition: that is, full-power operation (normal), shutdown, refueling, anticipated operational occurrences (including tests), and the design-basis accident (DBA). For plant operation with Hydrogen Water Chemistry, in-plant tests have shown that the calculated N-16 activity estimates will increase a maximum factor of six from the estimates shown in these tables. LOCA sources are determined using RADTRAD (Reference 24) models with design basis core source terms, credited removal mechanisms, and transport parameters. Uniform mixing in secondary containment is assumed when evaluating secondary containment gamma shine, and 100 percent filter efficiency is assumed when evaluating SGTS filter source terms. RADTRAD calculated time dependent compartment activities are time integrated and then evaluated using MicroShield 5.05 (Reference 25). Sources considered are the primary containment, the reactor building, a standby gas treatment system filter, and an environmental plume outside of the control room shielding.

12.1.3.2 Radiation From Reactor Core

During full-power operation, radiation from the reactor core proper consists of neutrons and gamma radiation resulting from the fission process itself, gamma radiation resulting from capture or inelastic scattering of neutrons within the core, and gamma radiation resulting from fission product decay. In addition, neutron interactions with the core shroud and RPV result in capture or inelastic scattering of gamma rays.

Table 12.1-7 presents multigroup neutron and gamma ray fluxes outside the RPV. The gamma ray fluxes include core fission gamma sources as well as secondary gamma sources that result from neutron capture in the core, water shroud, and vessel.

12.1.3.3 Activity in Steam and Condensate

Piping and equipment that contain reactor water, steam, or condensate are principal sources of radiation. The predominant activity requiring shielding in these systems is the ^{16}N carried in the steam and water from the reactor. Usually, all other activity sources in the steam other than ^{16}N can be neglected, since their magnitude is so much smaller. The radiation source strength at any of the various pieces of equipment containing steam or reactor water is then the RPV appropriate outlet nozzle activity of ^{16}N decayed by the transit time from the reactor outlet to the equipment. Tables 12.1-8 and 12.1-9 define the ^{16}N sources used in the Fermi 2 shield design. With Hydrogen Water Chemistry in operation, these N-16 estimates will increase up to a factor of six.

12.1.3.4 Offgas System Activity

The major radiation source of the offgas system is the ^{16}N in the noncondensables traveling from the condenser to the recombiners. The total transit time of the offgas between the RPV and the steam-jet air ejector is conservatively calculated as about 7 sec. Decay and delay through the offgas system are taken into account. The ^{16}N is the major source of radiation up to the 2-minute delay line. After the delay line, the fission products predominate as the shielding source. The sources used in this system design are defined in Table 12.1-9.

12.1.3.5 Activity for Radwaste, Reactor Water Cleanup, and Condensate Demineralizer Systems

The radiation source in these systems is due to the radioisotopes originating in the reactor water and steam. In the RWCU system, radioisotopes (including corrosion products) present in the water are the source of activity. In the condensate demineralizer system, the sources are the activities carried over in the primary steam and daughters resulting from radioactive gas decay in the condensate demineralizer system itself. In the RWCU system, ^{16}N and similar short-lived activity isotopes were taken into account, with ^{16}N included only for that portion of the RWCU system in the reactor building.

In the reactor water, the corrosion product activity is present in both soluble and insoluble forms. The latter is primarily removed by filtration and the former by ion exchange. When considering fission product accumulation, the predominant fission products were assumed to be essentially soluble. Activity accumulates in equipment such as filters and demineralizers. Activity levels in such equipment build up during plant operation until equilibrium is achieved or until the activity is removed (or diminished) by backwashing, or by discarding resins.

The solid and liquid radwaste systems contain varying degrees of activity, depending on the system and the point of processing.

Table 12.1-10 defines the sources used in the radwaste building shield design.

12.1.3.6 Shutdown Sources

The largest radiation source after reactor shutdown is decaying fission products in the fuel. For shield design purposes, the strength of the fission product source has been based either on data from other operating plants (Section 11.1) or on a reactor operating sufficiently long to establish equilibrium conditions for the buildup of all major fission products (see Table 12.1-15).

A secondary source is the structural material activation of the RPV, its internals, and the piping and equipment located between the RPV and the biological shield.

The third type of source is the activated corrosion products accumulated or deposited on the internals of the RPV, the primary loop piping, the secondary loop piping, and components associated with primary coolant processing. Table 12.1-8 contains further information on the shutdown sources used in the Fermi 2 shield design.

12.1.3.7 Design-Basis Accident Sources

To determine the original shielding requirements for the main control room, the radiation sources used for the DBA assumed that 100 percent of the noble gases, 50 percent of the halogens, and 1 percent of the remaining fission product inventory is released from the fuel at the time of the accident. These accident sources were also considered in conjunction with normal operation sources in determining the required thicknesses.

A complete reevaluation of the shielding design for post-LOCA source conditions was performed in conjunction with the response to NUREG-0737 Item II.B.2. A discussion of the reevaluation is contained in Subsection 12.1.6.

The present shielding design has been reevaluated using Alternative Source Terms per 10 CFR 50.67 and Regulatory Guide 1.183 guidance. This analysis was performed to confirm the 10 CFR 50.67 limits to operator doses will be met, and to credit certain of the available margins provided by the original design.

12.1.3.8 Stored Waste

With the exception of the Independent Spent Fuel Storage Installation there are no plans to store high-level radioactive wastes outside the building structures at the Fermi 2 site. Radioactive waste products are normally stored at designated areas within the plant buildings. These areas are shielded as necessary. Table 12.1-16 defines the site boundary dose rate for a curie of stored waste along with the assumptions used in the calculations.

The condensate storage tanks contain trace amounts of radio-isotopes, the concentrations of which do not normally exceed 1.0×10^{-3} $\mu Ci/cm^3$. The maximum dose rate at the site boundary caused by this activity in two tanks is 3.6×10^{-3} mrem/year, as shown in Table 12.1-17.

12.1.3.9 Turbine Building Skyshine Exposures

The SKYSHINE code (Reference 19), designed to evaluate the effect of the turbine building geometry on site boundary radiation levels, was used to calculate gamma ray dose rates at eight specific locations distributed on and within the site boundary. The SKYSHINE code uses a Monte Carlo method and air transport data, along with concrete and steel transmission and reflection data, to evaluate the structure design. The program designates which portion of the calculated dose rates results from gamma rays penetrating the roof and each wall of the building, as well as that which results from gamma rays emitted through openings in the building roof and walls. The results of these calculations (Reference 19) are shown in Table 12.1-18, and the locations of the receiver points are shown in Figure 12.1-2.

The turbine building is a source of radiation due to the inherent activity of the steam. In the dose-rate calculations, only the ^{16}N activity from the steam was considered since it is the only isotope of any significance. For example, the ^{16}N activity leaving the reactor is at least a factor of 100 greater than any other isotopic activity. Also, the high energy (6 MeV) gamma rays from the ^{16}N will be attenuated in air much less than the lower energy gamma rays from the other isotopes, thereby giving higher dose rates. The turbine, reheaters, and steam lines are enclosed on all sides by shield walls. Hence, all radiation must first travel upward (through the roof and upper walls) and scatter in the air before reaching the ground. The site boundary dose rate, therefore, will be less than that from a corresponding unit with an exposed or unshielded turbine area. The internal or self-attenuation of each source component (that is, reheaters, turbines, high-pressure piping, and low-pressure crossover piping) was included in the calculations.

Receiver points C and D (Figure 12.1-2) are located north of the plant in line with the turbine. Receiver point H is located in the area of the Fermi 2 interpretive building in the

environmental center. Point B is located at the main office building complex, whereas point A is located at the far eastern aisleway on the third floor of the turbine building (60 ft above grade). All other points were taken to be 3 ft above ground elevation. All receiver points were positioned in air with no shielding effect of structures, except for points A and B. For point A, the attenuating effect of an 8-in. concrete ceiling was included. This is conservative, since the major portion of the roof of the turbine building is significantly thicker than 8 in. Point B took into account the shadowing effect of the other (eastern) wall of the turbine building. Points E, F, and G were located to the west of the turbine building, in a lateral direction from the major radiation sources.

The computed dose rate at the site boundary in this due west direction (point G) is 3.8×10^{-4} mrem/hr or 3.32 mrem/year. The nearest actual site boundary is in the northwest direction (3200 ft from the turbine). Extrapolation of the SKYSHINE code data to this point results in a dose rate of 7.8 mrem/year at the nearest site boundary. This is a conservative estimate, since the value does not take into account the geometrical "shadowing" effect of the tall reactor building on the sources in this particular direction. For plant operation with Hydrogen Water Chemistry, in-plant tests have shown that these conservative calculated N-16 estimates could increase by a maximum factor of six from the estimates calculated in Reference 19 and shown in Table 12.1-18.

The computed dose rates shown in Table 12.1-18 indicate that the gamma ray emission from the reheaters is the major contributor to the dose rate at all points except for the point at point H near the Quarry Lakes. The next largest contribution to the dose rate results from the gamma rays emitted from the low-pressure crossover pipes. The maximum contribution by the gamma rays emitted from the high-pressure inlet pipes is about 6 percent at points C and D. The dose rate due to gamma rays produced in the high- and low-pressure turbines is insignificant when compared to that from the other sources.

A second source of turbine building radiation comes through the outer walls of the building itself from radiation in hot equipment cells adjacent to the outer building walls. These levels are then further attenuated through air to the site boundary. The maximum radiation level so calculated occurs at the southern boundary of the site, opposite the southern end of the turbine building, and is less than 0.5 mrem/year. Corresponding levels from other walls of the turbine building are at least a factor of 10 lower.

The third source of turbine building radiation is also insignificant. It is due to skyshine, which occurs from radiation leaving the concrete ceilings of the various radioactive cells on the third floor. The total air scattered dose rate of the site boundary from all of these sources was calculated to be less than 0.03 mrem/year.

The reactor building is not a significant source of radiation dosage at the site boundary. This building is shielded such that the radiation levels at its outer walls are below 0.5 mrem/hr.

The maximum dose rate at the site boundary, which is due to the attenuation of core gamma radiation through the concrete walls and then through the air, was calculated to be less than 0.003 mrem/year. Skyshine doses from the fifth (operating) floor of the reactor building are insignificant.

12.1.3.10 Field Run Piping

Steps were taken to ensure that the routing of field run process piping, which carries radioactive fluid, would result in minimal radiation exposure to plant personnel. Only that piping which is 2 in. or smaller (nominal diameter) is field run, fabricated, and erected.

All process piping including field run piping is shown on the appropriate system piping diagrams. These drawings provide enough information for an adequate shielding review. When necessary, field drawings prepared before the installation of the piping were also reviewed for shielding requirements. Similarly, the completed as-built drawings are reviewed and approved.

Onsite inspections were conducted as necessary to review the shielding design. If any of these review steps indicated a necessity for modifying the field routing of a given piping run, such modifications were evaluated and made as necessary.

System piping diagrams that include field run piping are also reviewed for considerations of ALARA exposures. Any piping that may adversely affect occupational exposures is given an additional review.

12.1.4 Area Radiation Monitoring

12.1.4.1 Criteria for Necessity

The objective of the area radiation monitoring system (ARMS) is to provide plant personnel with a continuous record and indication in the main control room of gamma radiation levels at selected locations. These locations are within various plant buildings where radioactive materials may be present or inadvertently introduced. The system is designed to obtain accurate and reliable information concerning radiation levels in selected plant areas to ensure personnel safety.

The design objectives of the ARMS are to provide

a. Supervisory information to plant operators so that decisions on deployment of personnel in the event of an accident resulting in a release of radioactive material can be properly made

b. Supervisory information to plant operators to warn of unauthorized or inadvertent movement of radioactive material in the plant. This system also supplements other systems, including the process and effluent radiation monitor system and reactor coolant leak detection system, in detecting abnormal migrations of any radioactive material from plant process streams

c. Indication and recording in the main control room of the gamma radiation level in selected areas as a function of time, and the alarming of abnormal radiation conditions

d. Local alarms and/or indicators at all points where a substantial increase in radiation levels might be of immediate importance to personnel frequenting or working in the area

e. Indication to operating personnel that a channel is inoperable.

12.1.4.2 Criteria for Location

A total of 47 monitors are provided at various locations inside the reactor, auxiliary, radwaste, service, onsite storage, and turbine buildings. The detectors are located in areas where:

a. Personnel perform regular duties in areas where radiation is present. These duties are performed once per day or more frequently

b. Personnel perform infrequent duties, but where there is a high probability that significant changes in radiation levels could occur

c. Personnel perform infrequent duties, or where there is a low probability that significant changes in radiation levels could occur, but where surveillance is desired.

The functional description, general locations, ranges, and alarm setpoints of the area monitors are given in Figures 12.1-11 through 12.1-13. The locations, which may be changed based on operating experience, were chosen so that a clear indication of radiation levels and radiation trends in occupied areas is given. Figures 12.1-1 and 12.1-3 through 12.1-8 show these general locations.

12.1.4.3 Design Criteria

The following design criteria are used in the design of the ARMS:

a. To facilitate compliance with applicable regulations and guides, monitors and detectors have sensitivities and ranges in accordance with radiation levels anticipated at specific detector locations

b. All monitors register full-scale if exposed to radiation levels that exceed full-scale indication

c. Radiation dose rates are continuously recorded in the main control room and are indicated on meters in the relay room

d. Main control room alarms annunciate high radiation dose rates and signal failures

e. A "mimic panel" in the main control room indicates which monitor has alarmed

f. Local alarms and indications are provided near selected detector locations

g. Access to the alarm setpoints is under the administrative control of Health Physics

h. Monitor equipment is readily accessible for maintenance and calibration, with the exception of a few sensor- converter units and auxiliary units located in high- radiation areas during power operation

i. Environmental design conditions for the components are consistent with the conditions stated for the reactor building and control center

j. Each power supply unit, which has sufficient capacity to power 10 monitor channels, is provided with a power feed that is manually restorable to diesels

k. The detector is responsive to gamma radiation over an energy range of 80 keV to 7 MeV, with an average energy dependence of ±20 percent from 100 keV to 3 MeV (per GEK-32374).

12.1.4.4 Equipment Description

The ARMS functional diagram is shown in Figure 12.1-11. The system has no control functions. All locally mounted instruments are located where accidental damage from movement of material or equipment is highly improbable.

The monitors are well scattered throughout the plant. One monitor does not serve as a backup for another monitor. Requirements for a small number of monitors to be in service during plant operation are contained in the Technical Specifications. Any malfunctioning monitors are repaired as soon as possible. During work in the fuel storage pool when irradiated fuel is handled, the low-range monitor on the refueling platform provides an alarm if an assembly is accidentally raised too high in the water.

Each channel has plug-in modules that make the system easy to test, maintain, or troubleshoot. Each channel contains items described in Subsections 12.1.4.4.1 through 12.1.4.4.8.

12.1.4.4.1 Sensor-Converter

The sensor-converter unit is encased in a small cylindrical aluminum container that is sealed against its environment. It is not affected by water spray and is designed to be fully operational over a wide range of temperatures. The unit is normally mounted on a wall or other vertical surface.

The sensor (detector) is one of a series (depending on the monitor range) of halogen-quenched Geiger-Mueller (GM) tubes that detect gamma radiation over the energy range of 80 keV to 7 MeV. The converter amplifies the detector signal and supplies an integrated logarithmic output. At low dose rates, radiation levels are measured by the usual pulse counting technique. At higher dose rates, a current generated by the detector is added to the pulse counting circuit output current, thus compensating for loss of counts resulting from resolving time losses.

The sensor-converter has good sensitivity at low levels and fast response at high levels because of the count rate circuit, which combines a long integrating time constant at low radiation levels with a fast overall response at high radiation levels. Another circuit is included that keeps the instrument reading full scale for a radiation level greater than full scale. The overall accuracy within the design conditions stated in Subsection 12.1.4.3, including energy dependence (100 keV to 3 MeV), is within 10 percent of equivalent linear full-scale recorder output for any decade.

The sensitivity and range of the detectors have been selected to have the meters and recorders read on scale during normal operation. For the range and setpoints for each detector, see CECO.

If any of the monitor locations chosen prove to be ineffective after a period of plant operation, the sensor-converter unit may be moved to more effective locations.

12.1.4.4.2 Indicator and Trip Unit

The indicator and trip units are mounted in racks in the relay room. Each unit provides channel indication and control. In each unit, there are two solid-state trip circuits that use an extremely reliable low drift differential input bistable amplifier. A four-decade logarithmic meter, which corresponds to the range of the detector, is supplied together with low (failure) and high (radiation) trip indicator lights. Controls include a TRIP RESET pushbutton and a mode switch (TRIP TEST/ZERO/OPERATE). The unit provides an output to the recorder and mimic panel. The power input is provided by the power supply unit.

12.1.4.4.3 Auxiliary Unit

The auxiliary unit is mounted locally near the sensor whenever a local audible alarm or light beacon is used. It is also used when only a local indication of radiation level is desired. The unit has a four-decade logarithmic meter that corresponds to the range of the detector. On a high (radiation) trip, an indicator on the unit lights, and a 120-V ac relay closes. A local lighting circuit is used to supply 120 V ac to this relay to operate any audible and visual signals used.

12.1.4.4.4 Power Supply Unit

Six power supply units are mounted in racks in the relay room. Each unit is capable of supplying power to 10 channels consisting of a sensor-converter unit, an indicator and trip unit, and an auxiliary unit. The voltages supplied to the channel components are +575 V dc, ±24 V dc regulated, +33 V dc unregulated and a trip test voltage. The unit has a high voltage meter (0-1000 V dc), a POWER ON light and a TRIP CHECK ADJUST potentiometer. When the mode switch on the indicator and trip unit is placed in TRIP TEST, this potentiometer can be used to adjust the output of the indicator and trip unit over its entire range to determine the trip setpoints.

12.1.4.4.5 Recorder

There are two multipoint chart recorders located on the combination operating panel H11-P816 in the main control room. These recorders make a continuous permanent record of the radiation levels detected by all the area radiation monitors. A list of the range and trip point of each detector by point number is posted on the recorder. This same information is listed in Figures 12.1-12 and 12.1-13. The signal to be recorded is supplied from the indicator and trip unit located in the relay room. Power to the recorder is supplied from an instrument circuit.

12.1.4.4.6 Mimic Panel

The mimic panel is located on the combination operating panel H11-P816 in the main control room. The panel consists of a layout of the plant buildings with labeled alarm lights for items such as high temperature, high pressure, smoke, and radiation. There are labeled lights

that correspond to the location of the detectors (sensor-convertor units). When a high alarm is indicated in the relay room on the indicator and trip unit, a mimic light marked "Channel XX" also illuminates, showing which channel has alarmed and the general location of the detector.

12.1.4.4.7 Audible and Visual Alarms

The alarms of the ARMS consist of

a. A low (failure) alarm, which will be activated whenever the indicator and trip unit reaches a downscale setpoint due to detector failure or circuit failure. This setpoint is adjustable over the entire scale

b. A high (radiation) alarm, which will be activated whenever radiation levels exceed a predetermined alarm setpoint. This setpoint is adjustable over the entire scale.

When the radiation level exceeds the high alarm setpoint, a main control room annunciator sounds. In addition, the light for the specific channel detector lights on the mimic panel in the main control room, the high trip indicator lights on the specific indicator and trip unit in the relay room, an indicator lights on the local auxiliary unit, and a local audible or visual alarm activates, when provided.

If the low alarm setpoint is reached, an annunciator sounds and the low trip indicator lights on the specific indicator and trip unit in the relay room.

The annunciators may be silenced in the main control room, but the alarms have to be reset at the indicator and trip unit when the alarm conditions are corrected. The local audible alarm or light beacon, when provided, remains on until the alarm is reset in the relay room.

Low (failure) alarm setpoints are normally set below the background radiation level to indicate when the system has failed. High alarm setpoints are set at least double the background level to prevent spurious alarms. The alarm setpoints can be changed as required to compensate for changes in the background radiation levels. This is done under the direction of Health Physics.

12.1.4.4.8 Area Radiation Monitor Portable Calibrator

The area radiation monitor portable calibrator is a test and calibration unit designed to facilitate "in-the-field" operational testing of the sensor and convertor. It contains a radioactive test source. To use this unit, the sensor-convertor is removed from the wall and calibrated while still connected to the ARMS circuit. Different gamma radiation levels can be obtained by adjusting the source and shield controls.

Additional sources with higher radiation levels, which are not specifically designed for use with this system, can also be used to check the higher ranges. If the proper radiation level is not indicated by the channel, adjustments to the channel are made.

12.1.4.5 Testing Requirements

Each area monitor is capable of being tested as a channel. The system has testing and calibrating equipment that permits local channel testing without disassembling any components. An internal trip test circuit, located in the indicator and trip unit, is adjustable over the full range of the readout scale using the TRIP CHECK ADJUST potentiometer located on the power supply unit. The test signal is introduced internally into the indicator and trip unit input so that a meter reading is obtained in addition to a trip (alarm). Thus, the alarm point can be easily checked. All of the trip relays are of the latching type and must be manually reset at the front panel of the indicator and trip unit.

12.1.4.6 Calibration

An initial calibration of each monitor/detector is performed before installation. During normal operation, checks of system operability are made by observing channel behavior. Functional checks and/or full-channel detector calibrations are performed at specified intervals and are in accordance with the Technical Specifications, as required. (Only channels 6, 15, 16 and 17).

12.1.4.7 Maintenance

The channel detector, electronics, and recorder are serviced and maintained on a scheduled basis to ensure reliable operation. Such maintenance includes cleaning, lubrication, and assurance of free movement of the recorder in addition to the replacement or adjustment of any components required after performing a test or calibration. The local alarms and readouts associated with the detector, which may require periodic adjustment, are located in radiation fields less than 1 mrem/hr in most cases.

12.1.5 Estimates of Exposures

12.1.5.1 Anticipated Doses

The maximum design dose rates in any designated area of the plant are given in Subsection 12.1.1 and in Figures 12.1-1 and 12.1-3 through 12.1-8. The area zones were determined by either the anticipated radiation level of the equipment in the area or the maximum radiation levels at the walls, achieved through shielding. The maximum design shield dose rates are not expected to occur during normal operation, because of the conservative nature of the design-basis calculations. Inside equipment compartments or adjacent to equipment carrying radioactive material, the anticipated dose will result from the actual operation of the equipment itself. The highest dose rates in the plant will occur in Zone X areas, such as inside the drywell, in the turbine condenser area, and in rooms in which equipment and piping contain highly radioactive material. However, personnel access to these areas is nonroutine, infrequent, and rigidly controlled.

Because of the large number of variables involved, an estimate based on operating histories of similar plants, rather than theoretical calculations, was used to estimate the radionuclide concentration in the fuel pool and the possible resulting exposures or radiation levels that

may exist in the area above and around the pool. Only those reactors with more than 2 years of operating experience and recent history of troublesome fuel elements were surveyed.

In the presentation of their paper at the Eighth Midyear Health Physics Society Symposium (Reference 20), Golden and Pavlick state that adequate fuel pool treatment should be provided to limit isotope concentration to 1 x 10^5 pCi/ml (equivalent to less than 1 mrem/hr above the pool) during refueling operations. These numbers show good agreement with the survey. The average isotope concentration in the fuel pool during normal operation was about 1 x 10^{-4} μCi/ml, with no measurable activity that could be attributed to the fuel pool.

A range of peak isotopic concentrations was obtained for refueling operations, from 0.015 to 0.75 μCi/ml. During refueling operations, those plants with filters and demineralizers reported radiation levels from 1 to 15 mrem/hr at the surface of the fuel pool. The maximum reported radiation level at the bridge attributable in part to the radioactive contamination in the fuel pool was about 2 mrem/hr. None reported any measurable radiation level on the main refueling floor attributable to the water.

The Fermi 2 fuel pool cleanup system design is influenced by the lessons learned from the reactors surveyed. Based on their history, less than 2 mrem/hr can be expected on the bridge, and less than 0.5 mrem/hr on the general refueling floor during normal work periods.

Experience in the design and operation of power plants shows that the actual (measured) radiation levels are usually less than those used as shielding design objectives for controlling the radiation doses. The annual doses received by the plant personnel can be kept well below the limits of 10 CFR 20 on the basis of the plant shielding and access control design. Shielding design takes into consideration radiation levels from maximum coolant activities, fission product leakage, and combinations of anticipated occurrences.

The main control room will be a Zone I area and hence will have a maximum allowable dose rate of 0.3 mrem/hr. Service areas will be Zone II areas, with a maximum dose rate of 0.5 mrem/hr. Therefore, annual doses in these areas, considering occupancy factors, will be well within the limits of 10 CFR 20. Boiling water reactor operating experience confirms the above contentions. For instance, dose rates in the main control room, visitor center (interpretive building), and office areas have been measured at operating BWR units and have been found to be between 0.01 and 0.06 mrem/hr during full-power operation. This is considerably below the 0.3 and 0.5 mrem/hr design limit for these areas in the Fermi 2 plant. Dose rates in controlled- access corridors shielded from process equipment containing radioactive material, such as the RWCU system and fuel pool cooling and cleanup system, vary typically between 0.5 and 3 mrem/hr, whereas dose rates outside the shielded steam tunnels are generally less than 0.1 mrem/hr. Dose rates inside the reactor building and in assigned Zone X areas are generally expected to be consistent with data available from operating BWR facilities. For example, typical contact readings on the high-pressure turbine have been found to exceed 400 mrem/hr at full power.

Since measured radiation levels from operating facilities indicate that actual dose rates to be expected in normally accessible areas should be significantly less than the peak external shield design dose rates used for the Fermi 2 design, an exposure analysis (described in Subsection 12.1.5.2) has been performed using average expected dose rates. These average dose rates for all access zones described in Figures 12.1-1 and 12.1-3 through 12.1-8 are defined in Table 12.1-1, Footnote a.

12.1.5.2 Estimate of Exposure of Plant Personnel

12.1.5.2.1 General

The annual exposure that could be received by plant personnel during patrolling, control operations, manual work, and expected maintenance has been estimated. This estimate was made during the intermediate stages of plant design as part of a process to review, examine, and/or evaluate various ALARA considerations and design features (see discussion in Regulatory Guide 8.19). As the Regulatory Guide indicates, these exposure estimates are by their very nature fairly imprecise. Their relationship to the actual man-rem doses received during subsequent plant operation will depend primarily on operating experience and the maintenance and repair problems encountered.

It is estimated that, with the plant operating continuously under expected radiological conditions, personnel exposures would not exceed the 1.25 rem per calendar quarter limit, and average personnel exposures will be less than 5 rem/year. Unexpected major repairing of equipment is excluded from the annual exposure since the 1.25 rem per calendar quarter can be exceeded under such exceptional conditions. For the purposes of the estimate, normal work, control operations, and expected maintenance include

a. Routine patrol

b. Periodic tests, operations, and maintenance jobs (including planned repairs taking place more than once a year)

c. Main control room operations

d. Refueling.

The assumptions for the estimate are as follows:

a. Fermi 2 is operated by three shifts and six crews, each crew consisting of a minimum of six operating personnel as described in Subsection 13.1.2. These personnel are trained in various areas of radiation protection. Shift personnel do not perform technical functions in chemistry, radiochemistry, or instrument and/or control adjustments. Technicians qualified to meet the requirements of ANSI N18.1 perform these functions and are called in during off hours, when needed, by the Shift Manager. Routine patrols, tests, and periodic jobs throughout the facility are alternated between operating personnel to ensure an even distribution of radiation exposure

b. All electrical and mechanical maintenance is performed by the maintenance section. A maintenance crew of 12 is assumed for all expected mechanical and electrical maintenance. Exposures for the maintenance crew are assumed to be uniformly distributed over the personnel available

c. Calibration, testing, and maintenance of most plant instruments and control systems are accomplished by the instrumentation and control group. An instrumentation and control crew of at least eight persons is assumed for all plant instrumentation and control work. Exposures for the instrumentation and control group are assumed to be equally distributed over the normal personnel available, and are included in the maintenance staff exposure data

d. Maximum design-level dose rates in various plant areas are shown in Figures 12.1-1 and 12.1-3 through 12.1-8, and anticipated average design dose rates for these areas are defined in Table 12.1-1.

The estimate of average exposure and total yearly man-rem for each of the Fermi 2 working groups has been based on the plant operating continuously with the expected design-basis radiological conditions, and with personnel performing all their operations and patrolling in areas where in the dose rates have been assumed to be constant and equal to the average expected dose rate in the area (Table 12.1-1).

NOTE: These whole-body dose estimates of Section 12.1.5 have been performed as part of the original overall design-basis determination that the plant was well-designed from an ALARA standpoint. These calculations are/were intended to only represent conservative pre-operational estimates. They were not intended to be updated or revised in order to correspond to operational data or to any revised criteria, assumptions, methodology, etc. Detailed whole-body dose information is continuously taken and analyzed as an integral part of plant operations, and summary dose information is periodically provided to pertinent regulatory agencies.

12.1.5.2.2 Results

The estimates for the various buildings and jobs are as follows:

a. Tables 12.1-19 through 12.1-21 define the exposures operating personnel receive on routine rounds while checking equipment. These tables make the conservative assumption that the rounds are performed once per shift (once every 8 hr) 52 weeks per year

b. Tables 12.1-22 through 12.1-24 define the exposures that operating personnel receive during maintenance, such as filter changing and lubrication

   It should be noted that the radwaste handling (i.e., drumming, capping) and maintenance, as defined in Tables 12.1-19 through 12.1-24 and in Tables 12.1-26 through 12.1-28, include the estimates of exposures that radwaste handlers would experience

c. For the remaining time in the shift, it is assumed that the operations personnel spend their time in the shop, main control room, or other buildings where the average dose rate of 0.10 mrem/hr is expected. Table 12.1-25 defines the bases for which the man-rem exposure estimate has been established

d. Tables 12.1-26 through 12.1-28 define the exposures maintenance personnel receive during normal expected maintenance functions. These tables include man-hours expected for the maintenance groups, including mechanical, electrical, and instrumentation and control maintenance, and are defined for a whole year of operation

e. For the remaining time in the year, it is assumed that the maintenance personnel spend their time in a Zone II area, i.e., a maximum design dose rate of 0.5 mrem/hr, and an expected average dose rate of 0.1 mrem/hr. (See Table 12.1-

25 for this estimate). Table 12.1-25 also gives an exposure estimate for the remaining personnel associated with operation of the Fermi 2 facility and also the basis by which the estimate has been established

f. It is difficult to accurately estimate the amount of personnel exposure associated with the actual refueling process. The same is true for inservice inspection. However, data from the Millstone facility obtained in an AIF study indicate that 61 men had received a total of 74.23 manrem over a period of a year (1972) during routine plant surveillance, inspection, and routine refueling operation, for an average of 1.22 rem/man- year. Refueling exposures as reported by operating facilities normally include maintenance exposures associated with the refueling operation, not those associated with the refueling alone. Thus, it can be concluded that Tables 12.1-19 through 12.1-25 include the estimate of man-rem exposure for the maintenance portion of the refueling operation

g. Radiation exposure received by the chemists or designated technicians is difficult to assess since they perform technical functions in chemistry, radiochemistry, instrument, and/or control adjustments. However, experience indicates that these personnel receive 2 rem/ year/man. The same is true for the health physicists and the Health Physics technicians

h. Table 12.1-29 summarizes the exposure data presented in Items a. through g.

Comparison of the estimated results with data available from the operation of Nine Mile Point, Quad Cities 1 and 2, and Oyster Creek is given in Table 12.1-30. Data from the operating plants were obtained by averaging information presented in WASH-1311 (Reference 21).

12.1.6 Postaccident Shielding Assessment

12.1.6.1 Introduction

A postaccident radiation shielding review has been performed to ensure adequate access to vital areas and protection of safety equipment. The assumptions, approach, and results of the review are outlined below. These analyses were prepared in response to post-TMI guidance with Regulatory Guide 1.3 based source terms, and are typically conservative relative to analyses that would be performed in accordance with 10 CFR 50.67 and Regulatory Guide 1.183 guidance. Evaluations are made of control room doses and impacts on vital area accessibility with AST based parameters.

12.1.6.2 Source Terms

The initial reactor core inventory of radioactive nuclides was determined using assumptions in accordance with Regulatory Guides 1.3 and 1.7 and NRC post-TMI guidance. At time-equals- zero after the reactor shutdown, an instantaneous release of radioactivity from the core was assumed to occur. Liquid- containing systems were assumed to receive 100 percent of the noble gas inventory, 50 percent of the core halogen inventory, and 1 percent of all other radionuclides. Gas-containing systems were assumed to receive 100 percent of the core

noble gas inventory and 25 percent of the core halogen inventory. Radioactivity in liquid systems was assumed to be uniformly mixed in a volume of water equal to the total volume of the reactor vessel, the recirculation system volume, and the suppression pool water volume. Radioactivity in the primary containment air was assumed to be uniformly mixed in the total of the drywell and torus free air volumes. (Vapor-containing lines connected to the primary system have this activity confined to the primary system vapor space.) At time-equals-zero, the primary containment air volume was assumed to begin leaking into the reactor building atmosphere at the rate of 0.5 percent per day.

At the same time, the SGTS was assumed to begin drawing activity from the reactor building at a rate of one reactor building volume per day. The above considerations define the airborne radionuclide activity in the reactor building atmosphere. This airborne activity (plus the airborne activity released from an assumed 1500-gal primary liquid leak into the reactor building [with 100 percent noble gas and 10 percent halogen evolution assumed]) was used to determine the radionuclide inventory accumulated on the SGTS filters, the control room emergency makeup and recirculation filters, the process radiation monitor sample filters, and the technical support center emergency makeup recirculation filters.

The initial core inventory and the transport and decay of radionuclides were handled by the RACER computer code (Reference 22). The RACER code is made up of two major subroutines, RIBD and BAFFLE. RIBD is a standard industry code for calculating reactor core inventories. BAFFLE is a code that analyzes the transport of radionuclides between communicating compartments. Leak rates, filtration, and plate-out can all be modeled with this code, taking full account of radionuclide decay and daughter-product buildup.

Section 6.4 of NUREG-75/087 (Reference 23) provided the guideline for modeling the SGTS effluent plume.

For AST based analyses for the main control room, LOCA sources are determined using RADTRAD models with design basis core source terms, credited removal mechanisms, and transport parameters. Uniform mixing in secondary containment is assumed when evaluating secondary containment gamma shine, and 100 percent filter efficiency is assumed when evaluating SGTS filter source terms. ORIGEN 2.1 (Reference 26) based source terms appropriate for anticipated fuel cycle conditions are used. RADTRAD (Reference 24) calculated time dependent compartment activities are time integrated and then evaluated using Microshield (Reference 25). Sources considered are the primary containment, the reactor building, a standby gas treatment system filter and an environmental plume outside of the control room shielding.

12.1.6.3 Radioactive Systems

The systems assumed to contain radioactive liquids include the high-pressure injection system, the core spray system, the reactor core isolation coolant (RCIC) system, and the residual heat removal (RHR) system, as well as portions of the control rod hydraulic system, sample lines, and all piping and equipment in communication with the primary coolant system out to the second isolation valve. A design review was performed to ensure that no systems other than those mentioned above would become contaminated with postaccident primary coolant. In particular, design corrections have been made to ensure that the reactor building sumps (which could contain postaccident primary coolant) would not be pumped out

of the reactor building. The radwaste system, therefore, would not be contaminated by postaccident sources.

Systems assumed to contain postaccident primary containment atmosphere are the drywell, the torus free air volume, the hydrogen recombiner system, all piping and equipment connected to the drywell, and torus free air volume out to the second isolation valve. The reactor building atmosphere is assumed to be contaminated as a result of primary containment leakage. Steam lines are assumed to contain the core release fractions for airborne sources outlined in Subsection 12.1.6.2. It is assumed that these sources are restricted to the vapor-containing areas of the primary coolant system. A design review showed that the gaseous radwaste system is not exposed to postaccident source terms.

12.1.6.4 Radiation Environment

The determination of the total radiation environment at any location includes the consideration of all of the many potentially contributing sources. The sources considered include the following:

a. Direct radiation shine from the airborne and liquid radiation sources in the drywell and torus

b. Direct radiation shine from enigneered safety features equipment and piping circulating postaccident contaminated liquids or gases in the reactor building (e.g., RHR, high-pressure coolant injection, RCIC, core spray system, and hydrogen recombiners)

c. Immersion in and inhalation of the airborne sources within the reactor building heating, ventilation, and air conditioning (HVAC) boundary, resulting in gamma whole-body doses, beta skin doses, and thyroid doses due to iodine inhalation

d. Direct radiation shine of the reactor building and refueling floor atmospheres to surrounding areas

e. Direct shine from (or immersion in and inhalation of) the SGTS exhaust plume

f. Direct radiation shine from airborne filters that accumulate radionuclides (e.g., SGTS filters, control room and technical support center emergency makeup filters, and continuous air monitor sample filters).

g. Direct shine from the dry cask storage system HI-STORM units emplaced on the ISFSI storage pad.

The total radiation dose at any particular location was determined by summing all of the above-mentioned contributors. The final dose rates were then assembled and presented in the form of radiation zone maps. Zone map sets were prepared for times of 1 hr, 1 day, 1 week, and 1 month after the onset of the accident. These zone maps were prepared from the following zone designations:

I - greater than 500 rem/hr

II - 500 to 100 rem/hr

III - 100 to 10 rem/hr

IV - 10 to 1.0 rem/hr

V - 1.0 to 0.10 rem/hr

VI - 0.10 to 0.015 rem/hr

VII - less than 0.015 rem/hr

12.1.6.5 Method of Analysis

External dose rates due to direct radiation from the drywell, the torus, the various contained sources, and the effluent plume were determined by using Microshield on time integrated concentrations determined using RADTRAD.

Airborne immersion and inhalation doses were calculated using the RADTRAD computer code.

12.1.6.6 Radiological Equipment Qualification

Appropriate radiation calculations were generated, and the ability of safety-related equipment to withstand postaccident radiation levels was determined.

12.1.6.7 Vital Areas

A review was performed to determine the radiological accessibility and habitability of the station's vital areas. Areas considered in this review included the control room, the technical support center, the postaccident sample panel, the postaccident sample analysis areas, the radwaste panel, the motor control centers, instrumentation locations, emergency power supplies, the security center, the hydrogen recombiners, the hydrogen purge control areas, the containment isolation reset areas, and the manual emergency core cooling system (ECCS) alignment areas.

It was determined whether each of these potential vital areas is necessary for postaccident operation of the plant. Besides the control room, four vital areas were identified as listed in Section 11.4.3.12. For those areas necessary for postaccident operation of the plant, the extent of occupancy for these areas to fulfill their functions was established. This information, in conjunction with the postaccident radiation zone maps, made it possible to verify if the postaccident occupancy of vital areas would result in radiation doses to personnel that would exceed the limits set forth in GDC 19 and 10 CFR 50.67.

The postaccident accessibility review of the vital areas concluded that only one major modification was necessary; it was determined that excessive radiation skyshine from the refueling floor could enter the ground floor of the turbine building through a large equipment blockout in the north wall thus limiting the accessibility of this area. A removable concrete shield wall (14 ft 2 in. x 11 ft 8 in. x 18 in.) was constructed in front of the two former door openings in this area. This modification corrected the problem so that postaccident occupancy of vital areas will not be unduly limited by radiation.

The four vital areas identified in UFSAR Section 11.4.3.12 as being necessary for post-accident operations of the plant will continue to be habitable (within 10 CFR 50.67 limits)following a DBA-LOCA, after the application of AST to Fermi 2 as described below.

a. The calculated doses in the Technical Support Center (TSC) with existing TSC HVAC design parameters remains within allowable limits

b. The Operational Support Center (OSC) in the Turbine Building (TB) as well as the alternate OSC in the Service Building machine shop will continue to be habitable with some increase in dose in the primary OSC due to additional postulated activity in the TB due to MSIV leakage

c. The post-accident sampling facility will remain accessible, based on 1-hour occupancy and optional use of self-contained breathing apparatus (SCBA) when taking samples.

d. The post-accident sample analysis areas will continue to be accessible, and based on TSC results, most of these facilities would be expected to have lower exposures based on AST assumptions

An assessment was performed of access paths to the control room to confirm that increased airborne activity in the TB will not interfere with personnel change-over.

REFERENCES

1. J. R. Edwards and T. N. Hickey, Economic Comparison of an Improved Nuclear Filter System Considering Space, Operation, Testing and Maintenance Costs, Proceedings of the 13th AEC Air Cleaning Conference, Vol. 2, pp. 985-995, August 12-15, 1974.

2. Ward W. Engle, Jr., A User's Manual for ANISN, A One- Dimensional Discrete Ordinates Transport Code With Anisotropic Scattering, K-1693, Union Carbide Corporation, Nuclear Division, March 30, 1967.

3. ORNL-RSIC Library Data DLC-g/FARS: 122-Group Coupled Neutron and Gamma-Ray Transport Code Cross-Section Data Radiation Shielding Information Center, Oak Ridge National Laboratory, 1970.

4. ORNL-RSIC Library Data DLC-23/CASK: 40-Group Coup1ed Neutron and Gamma-Ray Cross-Section Data, Radiation Shielding Information Center, Oak Ridge National Laboratory, December 1972.

5. J. H. Hubell, Photon Cross Sections, Attenuation Coefficients, and Energy Absorption Coefficients From 10 KeV to 100 GeV, NSRDS-NBS29, August 1969.

6. S. Buscagline and R. Manzini, Buildup Factors: Coefficients of the J. J. Taylor Equation, ORNL-tw-80, February 1964.

7. R. L. Walker, and M. Grotenhuis, A Summary of Shielding Constants for Concrete, ANL-6443, 1961.

8. R. G. Jaeger (Ed.), Engineering Compendium on Radiation Shielding, Vol. 1, Chapter 4, Springer-Verlag, 1968.

9. D. K. Trubey, A Survey of Empirical Functions Used To Fit Gamma-Ray Buildup Factors, ORNL-RSIC-10, Oak Ridge National Laboratory, 1966.

10. M. A. Capo, Gamma Ray Absorption Coefficients for Elements and Mixtures, ANP XDC-59 10-19, 1959.

11. R. L. Engle, J. Greenborg, and M. M. Hendrickson, ISOSHLD-A Computer Code for General Purpose Isotope Shielding Analysis, BNWL-236, Pacific Northwest Laboratory, Richland, Washington, June 1966; Supplement 1 March 1967; Supplement 2, April 1969.

12. R. E. Malenfont, QAD: A Series of Point-Kernel General Purpose Shielding Programs, LA-3573, Los Alamos Scientific Laboratory, April 5, 1967.

13. R. G. Jaeger (Ed.), Engineering Compendium on Radiation Shielding, Vol. 1, Chapter 8, Springer-Verlag, 1968.

14. W. E. Selph and H. C. Claiborne, Methods for Calculating Effects of Ducts, Access Ways, and Holes in Radiation Shields, ORNL-RSIC-20, Oak Ridge National Laboratory, 1968.

15. R. K. Disney and S. L. Zeigler, Nuclear Rocket Shielding Methods, Modification, Updating, and Input Data Preparation, Vol. 6, Point Kernel Techniques: KAP VI and SCAP, WANL-PR-(LL)-034, August 1970.

REFERENCES

16. W. C. Arcieri and S. J. Nathan, CYLDOSE Program Description and User's Manual, NUS-3780, NUS Corporation, April 1981.

17. R. Huang and J. J. Steyn, Code NUSALB: Description and User's Manual, NUS-TM-EC-15, NUS Corporation, November 1973.

18. M. B. Wells, D. G. Collins, and W. P. Neuendorf, Boundary Dose Rates Due to Gamma Rays at Power Reactor Sites, Radiation Research Associates Report RRA-M7202, November 12, 1972.

19. D. G. Collins, R. B. Livesay, and W. B. Wells, Skyshine Dosage Calculations for the Enrico Fermi Atomic Power Plant, Unit No. 2; Radiation Research Associates Report RRA-T7403, May 1974.

20. J. C. Golden and R. A. Pavlick, "A Review of Effluents, General Population Doses and Occupational Doses Resulting from Commonwealth Edison's Use of Nuclear Power," Population Exposures, CONF-741018, October 1974.

21. T. D. Murphy, A Compilation of Occupational Radiation Exposure From Light Water Cooled Nuclear Power Plants, 1969-1973, WASH-1311, UC-78, Radiological Assessment Branch, Directorate of Licensing, USAEC, May 1974.

22. D. L. Strenge, M. M. Hendrickson, and E. C. Watson, RACER - A Computer Program for Calculating Potential External Dose From Accidents, BNWL-B-69, Battelle Memorial Institute, Pacific Northwest Laboratories, Richland, Washington, 1971.

23. U.S. Nuclear Regulatory Commission, Standard Review Plan, Section 6.4, NUREG-75/087.

24. NUREG/CR-6604, “RADTRAD: A Simplified Model for RADionuclide Transport and Removal and Dose Estimation”, 4/1998, Supplement 1, 6/1999

25. Microshield Version 5.05, Grove Engineering, 1998

26. ORIGEN 2.1, “Isotope Generation and Depletion Code Matrix Exponential Method”, RSICC Code Package CCC-371

27. Regulatory Guide 1.183, Rev. 0, “Alternative Radiological Source Terms for Evaluating Design Basis Accidents at Nuclear Power Reactors” July 2000

28. 10 CFR 50.67, “Accident Source Term”

TABLE 12.1-1 PLANT RADIATION SHIELDING ZONES FOR NORMAL OPERATION AND ANTICIPATED OPERATIONAL OCCURRENCES[h,i]

Zone Number	Maximum Dose Rate[a] (mrem/hr)	Posting Required[b]	Anticipated Access[c]
I	≤0.3[d]	No	Unrestricted
II	≤0.5	No	Restricted with unlimited access
III	≤1.0	No	Restricted with occupational access
IV	≤2.0	No	Restricted with occupational access
V	≤4.0	No	Restricted with periodic access
VI	≤8.0	Yes[e,f,g]	Restricted with limited access[f]
VII	≤15.0	Yes[f,g]	Restricted with limited access[f]
VIII	≤30.0	Yes[f,g]	Restricted with limited access[f]
IX	≤60.0	Yes[f,g]	Restricted with limited access[f]
X	≤60.0	Yes[f,g]	Restricted with limited access[f]

[a] Except for Zone X, the anticipated average dose rate is approximately 0.25-0.33 times that of the maximum design dose rate.

[b] Refers exclusively to whether posting with the signs "Caution - Radiation or High Radiation Area" is required; not the posting of actual radiation levels.

Actual radiation levels will be routinely posted at selected portions of Zones V through X.

[c] All access within the site boundary is controlled.

[d] This zone applies to the main control room only.

[e] Posting will be required in those areas in which there exists radiation such that a major portion of the body could receive a dose in excess of 100 mrem in any 5 consecutive days.

[f] Access only with Health Physics permission, with duration based on (1) radiation intensity level, (2) nature of the radiation, (3) past radiation exposure history of entering personnel.

[g] Posting with these signs will be required in those areas in which there exists radiation such that a major portion of the body could receive a dose in excess of 100 mrem in any 1 hr.

[h] These are design-basis radiation shielding zones; they do not necessarily represent the maximum actual operational dose in any particular area of the plant.

[i] These zones are original design-bases values, without the operation of Hydrogen Water Chemistry.

TABLE 12.1-2 SUMMARY OF DRYWELL SHIELD DESIGN

Item	Protected Region	Design Condition	Design Value
A	Inner face of sacrificial shield wall	Full power	$\leq 5 \times 10^{10}$ MeV/cm^2/sec
B	Outer face of sacrificial shield, and at mating flange for top head of RPV	Full power	$\leq 2 \times 10^{5}$ neut/cm^2/sec (thermal)
C	Outer face of drywell biological shield	Full power	0.3 mrem/hr (laterally) 2 mrem/hr (above plug)
D	Outer face of sacrificial shield	1-day shutdown, with core in place	30 mrem/hr (from sources inside shield)

TABLE 12.1-3 SPECIFIC SHIELD DESIGN CRITERIA FOR REACTOR AND AUXILIARY BUILDINGS

Identification Number[a]	Location of Source	Design Conditions of Source Area	Protected Area	Protected Area Design Conditions	Maximum Design Level in Protected Area (mrem/hr)
A.B.C.					
1.1.1	Torus in subbasement	Radiation streaming from drywell	A) Adjacent northwest cubicle	Local equipment down	1.5
			B) Adjacent southwest cubicle	Local equipment down	1.5
			C) Adjacent northeast cubicle	Local equipment down	1.5
			D) Adjacent southeast cubicle	Local equipment down	1.5
2.1.1	HPCI room	Testing of HPCI system	A) Area above (562 ft)	Always	30.0
			B) First-floor level (583 ft 6 in.)	Always	2.0
1.1.2	RHR rooms (2)	Reactor shutdown	A) Cubicles directly above (562 ft)	Always	2.0
1.1.3	RCIC system cell (NE)	Testing of RCIC system	A) Cubicles directly above (562 ft)	Always	2.0
1.1.4	Spray pump cell (SE)	Equipment testing	A) Cubicles directly above (562 ft)	Always	2.0
1.2.1	Torus in basement	A) Radiation streaming from drywell	A) Adjacent northeast cubicle	Always	1.5
			B) Adjacent southeast cubicle	Always	1.5
			C) Adjacent northwest cubicle	Always	1.5
			D) Adjacent southwest cubicle	Always	1.5
			E) Operating floor above (583 ft 6 in.)	Always	0.5
		B) Testing mode for RCIC, RHR, or HPCI	A) Operating floor above (583 ft 6 in.)	Always	2.0

TABLE 12.1-3 SPECIFIC SHIELD DESIGN CRITERIA FOR REACTOR AND AUXILIARY BUILDINGS

Identification Number[a]	Location of Source	Design Conditions of Source Area	Protected Area	Protected Area Design Conditions	Maximum Design Level in Protected Area (mrem/hr)
A.B.C.					
2.2.1	Radioactive pipe tunnel	Maximum activities in all lines	A) Adjacent operating areas	Always	0.5
			B) Operating aisles above (583 ft 6 in.)	Always	0.5
1.3.1	RHR heat exchangers	Reactor shutdown	A) Adjacent aisles	Always	2.0 (Max.)
			B) Region outside building	Always	0.5 (Max.)
1.3.2	Steam tunnel	Normal	A) Adjacent operating areas	Always	0.5
			B) Areas above and below	Always	0.5
1.3.3	Neutron monitoring (TIP)	TIP (maximum activity) in TIP room	A) Adjacent operating areas	Always	2.0
			B) Roof of cell	Always	8.0
			C) Operating floor above (613 ft 6 in.)	Always	2.0
1.5.1	Waste sludge discharge pump	Intermittent sludge discharge	A) Adjacent operating areas	Always	1.0
			B) Operating areas above and below	Always	1.0
1.5.2	RWCU phase separators	Maximum activities in tanks	A) Adjacent sludge-pump room	Pumps down	4.0
			B) Adjacent heat-exchanger room	Units down	4.0
			C) Adjacent RHR room	RHR down	4.0
			D) Region outside building	Always	0.5
			E) Operating area below	Always	0.5
			F) Room directly above	Always	1.0
1.5.3	RWCU heat exchangers	Normal	A) Adjacent aisles	Always	0.5
			B) Operating floor below	Always	0.5

TABLE 12.1-3 SPECIFIC SHIELD DESIGN CRITERIA FOR REACTOR AND AUXILIARY BUILDINGS

Identification Number[a]	Location of Source	Design Conditions of Source Area	Protected Area	Protected Area Design Conditions	Maximum Design Level in Protected Area (mrem/hr)
A.B.C.					
			C) Adjacent phase-separators	Units down	4.0
1.5.4	RHR heat exchangers	Reactor shutdown	A) Adjacent aisles	Always	2.0 (Max.)
			B) Operating floor above	Always	2.0 (Max.)
			C) Region outside building	Always	0.5 (Max.)
			D) Adjacent phase-separator room	Units down	4.0 (Max.)
1.5.5	RWCU recirculating pumps	Normal	A) Adjacent aisles	Always	0.5
			B) Adjacent RWCU pump cell	Pumps down	4.0
			C) Room below	Always	0.5
			D) Operating aisle below	Always	0.5
			E) Roof above cell	Always	4.0
			F) Operating floor above (641 ft 6 in.)	Always	0.5
1.7.1	Fuel pool heat exchanger	Normal	A) Adjacent aisles	Always	0.5
			B) Roof above cell	Always	4.0
			C) Operating floor above (659 ft 6 in.)	Always	0.5
			D) Pump rooms below	Pumps down	0.5
1.7.2	Fuel storage pool	Pool contains 1/2 of core spent fuel	A) Rooms below	Equipment down	4.0
			B) Adjacent east aisle	Always	1.0
			C) Adjacent west aisle	Always	0.5
			D) Adjacent north room	Always	1.0
1.8.1	Fuel storage pool	Pool contains 1/2 of core spent fuel	A) Adjacent east aisle	Always	1.0
			B) Adjacent west aisle	Always	0.5

TABLE 12.1-3 SPECIFIC SHIELD DESIGN CRITERIA FOR REACTOR AND AUXILIARY BUILDINGS

Identification Number[a]	Location of Source	Design Conditions of Source Area	Protected Area	Protected Area Design Conditions	Maximum Design Level in Protected Area (mrem/hr)
A.B.C.					
			C) Adjacent north room	Always	8.0
1.8.2	Dryer-separator storage pool	Storage of equipment in pool, after 3 days' decay	A) Adjacent aisles	Always	0.5
			B) Operating area below	Always	0.5
1.8.3	RWCU filter-demineralizers	Normal	A) Adjacent aisle (south)	Always	0.5
			B) Region outside building (north)	Always	0.5
			C) Adjacent demineralizer cell	Unit down	8.0
			D) Adjacent RWCU holding pumps	Pumps down	8.0
			E) Operating floor below	Always	0.5
			F) Operating floor above	Always	0.5
1.9.1	Dryer-separator pool	Normal	A) Adjacent aisles	Always	0.5
1.9.2	North SGTS room	LOCA	A) Region outside building (north)	Always	50.0[b]
			B) Adjacent SGTS cell	Unit down	8.0
			C) Adjacent HVAC room	Always	50.0[b]
			D) Main control room below	Always	5.0 rem[c]
1.9.3	South SGTS room	LOCA	A) Adjacent SGTS cell	Unit down	8.0
			B) Adjacent HVAC room	Always	50.0[b]
			C) Adjacent vent equipment room	Always	50.0[b]
			D) Main control room below	Always	<5.0 rem[c]

TABLE 12.1-3 SPECIFIC SHIELD DESIGN CRITERIA FOR REACTOR AND AUXILIARY BUILDINGS

[a] See Table 12.1-6 for explanation of identification numbers.

[b] Maximum value after a LOCA, when SGTS source is also at maximum activity.

[c] Dose integrated over duration of the LOCA.

[d] These levels are original design-basis values, without the operation of Hydrogen Water Chemistry.

TABLE 12.1-4 SPECIFIC SHIELD DESIGN CRITERIA FOR TURBINE BUILDING

Identification Number[a]	Location of Source	Design Conditions of Source Area	Protected Area	Protected Area Design Conditions	Maximum Design Level in Protected Area (mrem/hr)
A.B.C.					
4.2.1	Condensate backwash tank	Tank full of maximum activity	A) Operating floor above (583 ft 6 in.)	Always	0.5
			B) Pump rooms at either side	Pumps shut down	0.5
4.2.2	Condensate pump cells	Pumps and equipment operating	A) End rooms outside pump cells	Always	0.5
			B) Operating floor above	Always	0.5
4.2.3	Main pipe tunnel	Full power	A) Operating floor above (583 ft 6 in.)	Always	0.5
			B) Stairs and access areas at 564 ft	Always	0.5
			C) Other radioactive cells in basement	Shut down	8.0
4.2.4	Offgas holdup line	Full power	A) Southeast corner of basement	Always	0.5
			B) Two pump rooms in basement	Pumps down	8.0
			C) Operating floor above (583 ft 6 in.)	Always	0.5
			D) Steam jet air-ejector cells above (583 ft 6 in.)	Steam-jet air ejector shut down	8.0
4.2.5	Heater drain pumps	Full power	A) Adjacent heater pump cells	Pump down	8.0
4.3.1	Vacuum pumps	Maximum source conditions	A) Basement directly below	Always	0.5
			B) Main aisle outside pump cell	Always	0.5
			C) Operating floor above (613 ft 6 in.)	Always	0.5
4.3.2	Steam-jet air ejector cells	Full power	A) Main aisles outside cells	Always	0.5
			B) Adjacent steam jet air-ejector cells	Steam-jet air ejector down	8.0

TABLE 12.1-4 SPECIFIC SHIELD DESIGN CRITERIA FOR TURBINE BUILDING

Identification Number[a]	Location of Source	Design Conditions of Source Area	Protected Area	Protected Area Design Conditions	Maximum Design Level in Protected Area (mrem/hr)
A.B.C.					
			C) Adjacent vacuum pump cell	Pump down	8.0
			D) Recombiner cells above (613 ft 6 in.)	Equipment down	8.0
4.3.3	Heater drain-pump cells	Full power	A) Main aisles outside cells	Always	0.5
			B) Adjacent pump cells	Pump down	8.0
4.3.4	North reactor feed pump turbine cell	Full power	A) Main aisle outside cell	Always	0.5
			B) Operating floor above (613 ft 6 in.)	Always	0.5
4.3.5	South reactor feed pump turbine cell	Full power	A) Main aisle outside cell	Always	0.5
			B) Oil reservoir room	Always	2.0
			C) Operating floor above (613 ft 6 in.)	Always	0.5
4.3.6	Gland condenser room	Full power	A) Main aisle outside cell	Always	0.5
			B) Oil reservoir room	Always	2.0
			C) North reactor feed pump turbine cell	Reactor feed pump turbine down	8.0
			D) Operating floor above (613 ft 6 in.)	Always	0.5
4.3.7	Drains cooler cells	Full power	A) Main aisle outside cells	Always	0.5
			B) Adjacent drains cooler cells	Cooler down	8.0
4.3.8	Polishing demineralizers	Maximum demineralizer activity	A) Main aisles outside cells	Always	0.5
			B) Adjacent demineralizer cells	Demineralizer down	8.0

TABLE 12.1-4 SPECIFIC SHIELD DESIGN CRITERIA FOR TURBINE BUILDING

Identification Number[a]	Location of Source	Design Conditions of Source Area	Protected Area	Protected Area Design Conditions	Maximum Design Level in Protected Area (mrem/hr)
A.B.C.					
			C) Operating floor above (613 ft 6 in.)	Always	0.5
			D) Pump cells in basement below	Always	0.5
			E) Backwash tank in basement	Tank empty	8.0
4.3.9	Main pipe chase	Full power	A) Main aisles at south end	Always	0.5
			B) Oil reservoir room	Always	2.0
			C) Adjacent radioactive cells	Equipment shut down	8.0
4.3.10	Main condenser and steam piping	Full power	A) Main aisles at both ends	Always	0.5
			B) Oil lube equipment (west side)	Always	0.5
			C) Operating floor above (south end)	Always	0.5
4.5.1	Recombiner cells	Full power	A) Main aisles outside cells	Always	0.5
			B) Steam jet air-ejector cells below(583 ft 6 in.)	Steam-jet air ejector down	8.0
			C) Operating floor above (643 ft 6 in.)	Always	0.5
			D) Chiller cells above	Chiller down	8.0
4.5.2	North feedwater heater cell	Full power	A) Main aisles surrounding cell	Always	0.5
			B) Operating floor above (643 ft 6 in.)	Always	0.5
			C) Feedwater heater cell above (643 ft 6 in.)	Heater down	8.0
			D) Operating aisle below (583 ft 6 in.)	Always	0.5
			E) Drains cooler cells below	Cooler down	8.0

TABLE 12.1-4 SPECIFIC SHIELD DESIGN CRITERIA FOR TURBINE BUILDING

Identification Number[a]	Location of Source	Design Conditions of Source Area	Protected Area	Protected Area Design Conditions	Maximum Design Level in Protected Area (mrem/hr)
A.B.C.					
4.5.3	South feedwater heater cell	Full power	A) Main aisles surrounding cell	Always	0.5
			B) Operating floor above (643 ft 6 in.)	Always	0.5
			C) Heater cell above (643 ft 6 in.)	Heater down	8.0
			D) Operating aisle below (583 ft 6 in.)	Always	0.5
			E) Heater-pump cell below (583 ft 6 in.)	Pump down	8.0
4.5.4	Main condenser and steam piping	Full power	A) Main aisles at both ends	Always	0.5
			B) Heater cells on east side	Heaters down	8.0
			C) Aisle on east side	Always	0.5
			D) Oil lube equipment room (west)	Always	2.0
			E) Operating floor above (643 ft 6 in.)	Always	0.5
4.7.1	Charcoal adsorbers	Maximum activity	A) Main aisle	Always	0.5
			B) Chiller cells	Chiller down	8.0
			C) Sand filters	Filter drained	8.0
			D) Main aisle below (613 ft 6 in.)	Always	0.5
			E) Recombiner cell below	Equipment down	8.0
4.7.2	Sand filters	Maximum activity	A) Main aisles	Always	0.5
			B) Charcoal adsorber cell	No source	8.0
			C) Chiller cell	Chiller down	8.0
			D) Offgas pump cell	Always	0.5

TABLE 12.1-4 SPECIFIC SHIELD DESIGN CRITERIA FOR TURBINE BUILDING

Identification Number[a]	Location of Source	Design Conditions of Source Area	Protected Area	Protected Area Design Conditions	Maximum Design Level in Protected Area (mrem/hr)
A.B.C.					
4.7.3	Chiller cells	Full power	A) Main aisles	Always	0.5
			B) Offgas pump cell	Always	0.5
			C) Charcoal adsorber cell	No source	8.0
4.7.4	North feedwater heater cell	Full power	A) Main aisles	Always	0.5
			B) Heater cell below (613 ft 6 in.)	Heater down	8.0
4.7.5	South feedwater heater cell	Full power	A) Main aisles	Always	0.5
			B) Operating aisle below (613 ft 6 in.)	Always	0.5
			C) Heater cell below	Heater down	8.0
4.7.6	Reheater cells	Full power	A) Main aisle (east side)	Always	0.5
			B) Aisles at both ends	Always	0.5
			C) Feedwater heater cells	Heater down	8.0

[a] See Table 12.1-6 for explanation of identification numbers.

[b] These levels are original design-bases values, without the operation of Hydrogen Water Chemistry.

TABLE 12.1-5 SPECIFIC SHIELD DESIGN CRITERIA FOR RADWASTE BUILDING

Identification Number[a]	Location of Source	Design Conditions of Source Area	Protected Area	Protected Area Design Conditions	Maximum Design Level in Protected Area (mrem/hr)
A.B.C.					
3.2.1	Condensate phase separators	Maximum activity	A) Main aisle outside cell	Always	0.5
			B) Adjacent condensate decant pumps cell	Pumps down	8.0
			C) Adjacent condensate sludge discharge mix pumps cell	Pumps down	8.0
			D) Adjacent waste oil tank and chemical waste tank cell	Tanks drained	8.0
			E) Adjacent piping tunnel	Pipes drained	8.0
			F) Drum conveyor room above (583 ft 6 in.)	Room empty	8.0
			G) Main aisle above	Always	0.5
3.2.2	Condensate decant pumps	Maximum activity	A) Main aisle outside cell	Always	0.5
			B) Adjacent condensate sludge discharge mix pumps cell	Pumps down	8.0
			C) Adjacent condensate phase separators cell	Tanks drained	8.0
			D) On ceiling above (567 ft 6 in.)	Pipes drained	0.5
3.2.3	Condensate sludge discharge mix pumps	Maximum activity	A) Adjacent aisle outside cell	Always	0.5
			B) Adjacent waste oil pump and chemical waste pumps cell	Pumps down	8.0
			C) Adjacent condensate phase separators cell	Tanks drained	8.0
			D) On ceiling above (567 ft 6 in.)	Pipes drained	0.5
3.2.4	Waste oil pump and chemical waste pumps	Maximum activity	A) Adjacent condensate sludge discharge mix pumps cell	Pumps down	8.0
			B) Adjacent aisle outside cell	Always	0.5
			C) Adjacent waste clarifier sludge pump and slurry dilution pump cell	Pumps down	8.0
			D) Adjacent waste oil tank and chemical waste tank cell	Tanks drained	8.0
			E) On ceiling above (567 ft 6 in.)	Pipes drained	0.5
3.2.5	Chemical waste tank and waste oil tank	Maximum activity	A) Adjacent condensate phase separators cell	Tanks drained	8.0
			B) Adjacent chemical waste pumps and waste oil pumps cell	Pumps down	8.0
			C) Adjacent waste clarifier tank and spent-resin tank cell	Tanks drained	8.0
			D) Adjacent pipe tunnel	Pipes drained	8.0
			E) Waste collector oil coalescer and floor drain oil coalescer above	Tanks drained	8.0
			F) Access aisle to coalescers above	Always	8.0
3.2.6	Waste clarifier sludge pump, slurry dilution pump, and spent-resin transfer pump	Maximum activity	A) Adjacent chemical waste pump and waste oil pump cell	Pumps down	8.0
			B) Aisle outside cell	Always	0.5
			C) Adjacent waste surge tank cell	Tank drained	8.0
			D) Adjacent pipe tunnel	Pipes drained	8.0
			E) On ceiling above (567 ft 6 in.)	Pipes drained	0.5

TABLE 12.1-5 SPECIFIC SHIELD DESIGN CRITERIA FOR RADWASTE BUILDING

Identification Number[a]	Location of Source	Design Conditions of Source Area	Protected Area	Protected Area Design Conditions	Maximum Design Level in Protected Area (mrem/hr)
A.B.C.					
3.2.7	Waste surge tank, waste sample tanks, and chloride waste tank	Maximum activity in all tanks	A) Adjacent waste clarifier tank and spent-resin tank cell	Tanks drained	8.0
			B) Adjacent waste collector tank and floor drain collector tank cell	Tanks drained	8.0
			C) Adjacent pipe tunnel	Pipes drained	8.0
			D) Adjacent waste sample pumps, waste collector pumps, waste surge pumps, equipment drain pumps, and evaporator feed pumps cell	Pumps down and pipes drained	0.5
			E) Health physics lab, control room, and office on operating floor above	Always	0.5
3.2.8	Waste clarifier tank and spent-resin tank	Maximum activity	A) Adjacent chemical waste tank and waste oil tank cell	Tanks drained	8.0
			B) Adjacent clarifier sludge pump, slurry dilution pump, and spent-resin transfer pump cell	Pumps down	8.0
			C) Adjacent waste surge tank cell	Tank drained	8.0
			D) Adjacent pipe tunnel	Pipes drained	8.0
			E) Demineralizer piping gallery above	Pipes drained	8.0
			F) Floor drain demineralizer and floor drain filter cells above	Tank and filter drained	8.0
3.2.9	Waste collector tank and floor drain collector tanks	Maximum activity in all tanks	A) Adjacent evaporator feed surge tank cell	Tank drained	8.0
			B) Adjacent waste sample, waste surge, waste collector, and floor drain collector pumps cell	Pumps down	0.5
			C) Adjacent waste sample tanks cell	Tanks drained	8.0
			D) Operating floor and office above (583 ft 6 in.)	Always	0.5
3.2.10	Evaporator feed surge tank	Maximum activity	A) Stairway outside cell	Always	0.5
			B) Evaporator feed pumps in aisle outside cell	Always	0.5
			C) Adjacent floor drain collector and waste collector tanks cell	Tanks drained	8.0
			D) Medical decontamination room and washdown area on operating floor above (583 ft 6 in.)	Always	0.5
3.2.11	Centrifuge feed tank	Maximum activity	A) Adjacent boiler	Always	0.5
			B) Centrifuge feed/recirculation pumps cell	Pumps down	8.0
			C) Aisle outside cell	Always	0.5
			D) Stairway outside cell	Always	0.5
			E) Adjacent floor sump	Always	2.0
			F) Drum-handling turntable on operating floor above (583 ft 6 in.)	Turntable not in use	8.0
3.2.12	Centrifuge feed/recirculation pumps	Maximum activity	A) Aisle and stairwell outside cell	Always	0.5
			B) Adjacent extruder/evaporator boiler area	Always	0.5
			C) Adjacent centrifuge feed tank cell	Tank drained	8.0

TABLE 12.1-5 SPECIFIC SHIELD DESIGN CRITERIA FOR RADWASTE BUILDING

Identification Number[a]	Location of Source	Design Conditions of Source Area	Protected Area	Protected Area Design Conditions	Maximum Design Level in Protected Area (mrem/hr)
A.B.C.					
3.2.13	Waste slurry metering pump, spent-resin slurry metering pump, and concentrates metering pump	Maximum activity	A) Adjacent aisle north of cell	Always	0.5
			B) Adjacent boiler cell	Always	0.5
			C) Extruder/evaporator on floor above	Extruder/evaporator not in use	8.0
3.2.14	Spent-resin slurry feed tank	Maximum activity	A) Adjacent spent-resin slurry recirculation pump cell	Pumps down	8.0
			B) Adjacent concentrates recirculation pump and emergency drain sump pumps cell	Pumps down	8.0
			C) Reciprocating drive units area on operating floor above	Always	0.5
			D) Concentrates feed tank cell	Tank drained	8.0
			E) Access aisle	Always	0.5
3.2.15	Concentrates recirculation pump	Maximum activity	A) Adjacent concentrates feed tank	Tank drained	8.0
			B) Adjacent spent-resin slurry feed tank	Tank drained	8.0
			C) Adjacent aisle outside cell	Always	0.5
			D) Reciprocating drive units on operating floor above	Always	0.5
3.2.16	Spent-resin slurry decant pump and spent-resin slurry recirculation pump	Maximum activity	A) Adjacent spent-resin slurry feed tank cell	Tank drained	8.0
			B) Adjacent emergency drains sump pumps and concentrates recirculation pump cell	Pumps down	8.0
			C) On ceiling above	Pipes drained	0.5
			D) Adjacent boiler and centrifuge feed and recirculation pump cell	Pumps down	8.0
3.2.17	Concentrates feed tank	Maximum activity	A) Adjacent spent-resin slurry feed tank cell	Tank drained	8.0
			B) Adjacent main aisle outside	Always	0.5
			C) Reciprocating drive units area on operating floor above	Always	0.5
			D) Concentrates recirculation pump cell	Pump and pipes drained	8.0
3.2.18	Pipe tunnel	Maximum activity in all pipes	A) Adjacent condensate phase separator cell	Tanks drained	8.0
			B) Adjacent chemical waste tank cell	Tank drained	8.0
			C) Adjacent waste clarifier tank and spent-resin tank cell	Tanks drained	8.0
			D) Adjacent waste surge tank and waste sample tanks cell	Tanks drained	8.0
			E) Above pipe tunnel outside	Always	0.1
3.3.1	Drum conveyor room	Maximum activity in drums, with 30 drums per	A) Main aisle outside cell	Always	0.5
			B) Grated walkway outside	Always	0.1
			C) Outside building	Always	0.1

TABLE 12.1-5 SPECIFIC SHIELD DESIGN CRITERIA FOR RADWASTE BUILDING

Identification Number[a]	Location of Source	Design Conditions of Source Area	Protected Area	Protected Area Design Conditions	Maximum Design Level in Protected Area (mrem/hr)
A.B.C.					
		conveyor	D) Adjacent reciprocating drive units area	Always	0.5
			E) Main aisle below (564 ft 0 in.)	Always	0.5
			F) Condensate phase separator tanks cell below	Tanks drained	8.0
			G) Condensate decant pumps cell below	Pumps down	8.0
			H) Condensate sludge discharge mix pumps cell below	Pumps down	8.0
			I) Evaporator cells above (601 ft 6 in.)	Equipment drained	8.0
3.3.2	Etched-disk filters	Maximum activity	A) Adjacent main aisle	Always	0.5
			B) Adjacent access aisle to coalescer	Pipes drained and coalescer filter removed	15.0
			C) Adjacent etched-disk filter backwash skid	Always	0.5
			D) Adjacent etched-disk filter	Filter backwashed	8.0
			E) Outside building	Always	0.1
			F) Washdown area above (601 ft 6 in.)	Always	0.5
3.3.3	Waste collector oil coalescer	Maximum activity	A) Adjacent access aisles to oil coalescers	Pipes drained and etched-disk filter backwashed	30.0
			B) Adjacent floor drain demineralizer	Tank drained	8.0
			C) Chemical waste tank cell below	Tank drained	8.0
			D) Outside building	Always	0.1
			E) Aisle in washdown area above (601 ft 6 in.)	Always	0.5
3.3.4	Floor drain oil coalescer	Maximum activity	A) Adjacent access aisles to oil coalescers	Pipes drained and etched-disk filter backwashed	30.0
			B) Adjacent access aisle	Always	0.5
			C) Aisles, air supply area, and washdown area above	Always	0.5
			D) Adjacent demineralizer piping gallery	Pumps down, pipes drained	8.0
			E) Waste clarifier tank cell and waste oil tank cell below (557 ft 6 in.)	Tanks drained	8.0
3.3.5	Floor drain demineralizer	Maximum activity	A) Adjacent waste collector oil coalescer cell	Tank drained	8.0
			B) Adjacent floor drain filter cell	Filter removed	8.0
			C) Waste clarifier tank cell below	Tank drained	8.0
			D) Adjacent demineralizer piping gallery	Pumps down, pipes drained	8.0
			E) Outside building	Always	0.1
			F) Aisle in washdown area above (601 ft 6 in.)	Always	0.5

TABLE 12.1-5 SPECIFIC SHIELD DESIGN CRITERIA FOR RADWASTE BUILDING

Identification Number[a]	Location of Source	Design Conditions of Source Area	Protected Area	Protected Area Design Conditions	Maximum Design Level in Protected Area (mrem/hr)
A.B.C.					
3.3.6	Floor drain filter	Maximum activity	A) Adjacent floor drain demineralizer cell	Tank drained	8.0
			B) Adjacent waste collector filter cell	Filter removed	8.0
			C) Adjacent demineralizer piping gallery	Pumps down, pipes drained	8.0
			D) Waste clarifier tank cell below	Tank drained	8.0
			E) Outside building	Always	0.1
			F) Aisle in washdown area above(601 ft 6 in.)	Always	0.5
3.3.7	Waste collector filter	Maximum activity	A) Adjacent floor drain filter cell	Filter removed	8.0
			B) Adjacent waste demineralizer cell	Tank drained	8.0
			C) Adjacent demineralizer piping gallery pump area	Pumps down, pipes drained	8.0
			D) Waste surge tank cell below	Tank drained	8.0
			E) Aisle in washdown area above (601 ft 6 in.)	Always	0.5
			F) Outside building	Always	0.1
3.3.8	East fuel pool filter-demineralizer	Maximum activity	A) Adjacent waste demineralizer cell	Tank drained	8.0
			B) Adjacent fuel pool filter-demineralizer cell	Filter removed	8.0
			C) Adjacent demineralizer piping gallery	Pumps down, pipes drained	8.0
			D) Waste sample tank cell below	Tank drained	8.0
			E) Aisle in washdown area above	Always	0.5
			F) Outside building	Always	0.1
3.3.9	West fuel pool filter-demineralizer	Maximum activity	A) Adjacent fuel pool filter-demineralizer cell	Filter removed	8.0
			B) Adjacent radwaste building control room	Always	0.5
			C) Adjacent demineralizer piping gallery	Pumps down, pipes drained	8.0
			D) Waste sample tank below	Tank drained	8.0
			E) Aisle in washdown area above (601 ft 6 in.)	Always	0.5
			F) Outside building	Always	0.1
3.3.10	Health Physics laboratories	Source samples	A) Main aisle next to labs	Always	0.5
			B) Adjacent radwaste building control room	Always	0.5
3.3.11	Valve operating tunnel	Normal operation	A) Adjacent demineralizer piping gallery	Pumps down, pipes drained	8.0
			B) Adjacent radwaste building control room	Always	0.5
			C) Adjacent operating aisle	Always	0.5
			D) Operating aisle and waste surge tank cell below	Aisle always Waste surge tank drained	0.5 0.8

TABLE 12.1-5 SPECIFIC SHIELD DESIGN CRITERIA FOR RADWASTE BUILDING

Identification Number[a]	Location of Source	Design Conditions of Source Area	Protected Area	Protected Area Design Conditions	Maximum Design Level in Protected Area (mrem/hr)
A.B.C.					
			E) Supply air area above (601 ft 6 in.)	Always	0.5
3.3.12	Drum capper	Mechanism in use with drums of maximum activity	A) Adjacent drum turntable cell	Turntable empty	8.0
			B) Adjacent operating aisle	Always	0.5
			C) Adjacent drum conveyor area	Conveyor not in use	8.0
			D) Aisle above	Always	0.5
			E) Floor sump below	Always	2.0
			F) Main aisle below	Always	0.5
3.3.13	Extruder/evaporator	Mechanism in use with drums of maximum activity	A) Adjacent turntable cell	Turntable empty	8.0
			B) Adjacent hatch and operating aisle	Always	0.5
			C) Adjacent drum conveying aisle	Conveyor not in use	8.0
			D) Adjacent operating aisle below (557 ft 6 in.)	Always	0.5
			E) Motor control center area above (601 ft 6 in.)	Always	0.5
3.3.14	Drum turntable	Mechanism in use with drums of maximum activity	A) Adjacent operating aisle	Always	0.5
			B) Adjacent extruder/evaporator	Extruder/evaporator not in use	8.0
			C) Adjacent drum capper	Drum capper empty	8.0
			D) Adjacent drum conveyor aisle	Conveyor empty	8.0
			E) Aisle above (601 ft 6 in.)	Always	0.5
			F) Main aisle below (557 ft 6 in.)	Always	0.5
3.4.1	South distillate surge tank and evaporator	Maximum activity	A) Adjacent north distillate surge tank and evaporator cell	Tank and evaporator	8.0
			B) Outside building	Always	0.1
			C) Reciprocating drive units below (583 ft 6 in.)	Always	0.5
			D) Adjacent caustic feed tank and chemical feed tanks area	Always	0.5
			E) Adjacent aisle to stairway	Always	0.5
			F) Drum storage below	Conveyors empty	8.0
3.4.2	North distillate surge tank and evaporator	Maximum activity	A) Adjacent south distillate surge tank and evaporator cell	Tank and evaporator drained	8.0
			B) Adjacent stairway	Always	0.5
			C) Adjacent steam station	Always	0.5
			D) Outside building	Always	0.1

TABLE 12.1-5 SPECIFIC SHIELD DESIGN CRITERIA FOR RADWASTE BUILDING

Identification Number[a]	Location of Source	Design Conditions of Source Area	Protected Area	Protected Area Design Conditions	Maximum Design Level in Protected Area (mrem/hr)
A.B.C.					
			E) Drum conveyor area below (583 ft 6 in.)	Conveyor area empty	8.0
3.4.3	Evaporator drains holdup tank	Maximum activity	A) Adjacent north distillate surge tank and evaporator cell	Tank and evaporator drained	8.0
			B) Adjacent south distillate surge tank and evaporator cell	Tank and evaporator drained	8.0
			C) Adjacent aisleway	Always	0.5
3.4.4	Centrifuge	Maximum activity	A) Adjacent washdown area and access aisle	Always	0.5
			B) Adjacent vent hood filter train	Filter element removed	8.0
			C) Adjacent turbine building	Always	0.5
			D) Reciprocating drive units area below (583 ft 6 in.)	Always	0.5
			E) Drum conveyor aisle below (583 ft 6 in.)	Conveyor not in use	8.0
			F) Rooms above	Always	0.5
3.4.5	Vent hood filter train	Normal operation	A) Adjacent centrifuge cell	Centrifuge empty	8.0
			B) Adjacent access aisle and stairway from washdown area	Always	0.5
			C) Adjacent turbine building	Always	0.5
			D) Part of reciprocating drive units area below (583 ft 6 in.)	Always	0.5
			E) Part of drum conveyor aisle below (583 ft 6 in.)	Conveyor not in use	8.0
			F) Rooms above	Always	0.5

[a] See Table 12.1-6 for explanation of identification numbers.

TABLE 12.1-6 SPECIFIC SHIELD DESIGN CRITERIA

Explanatory Note for Identification

Number in First Column of Tables 12.1-3, 12.1-4, and 12.1-5

The number in the first column of Tables 12.1-3, 12.1-4 and 12.1-5 is a three-part identifier, A.B.C., which is coded in the following manner:

The first digit, A, represents the general area location of the equipment which is to be shielded.

A	Location
1	Reactor building
2	Auxiliary building
3	Radwaste building
4	Turbine building

The second digit, B, represents the floor elevation of the equipment.

Corresponding Building Elevations

B	Floor	Reactor	Auxiliary	Radwaste	Turbine
1	Subbasement	540 ft	540 ft	-	-
2	Basement	562 ft	551 ft	557 ft 6 in.	564 ft
3	Grade	583 ft 6 in.	583 ft 6 in.	583 ft 6 in.	583 ft 6 in.
4	Mezzanine	600 ft 6 in.	603 ft 6 in.	601 ft 6 in.	-
5	Second	613 ft 6 in.	613 ft 6 in.	613 ft 6 in.	613 ft 6 in.
6	Mezzanine	626 ft	630 ft 6 in.	628 ft 6 in.	-
7	Third	641 ft 6 in.	643 ft 6 in.	-	643 ft 6 in.
8	Fourth	659 ft 6 in.	-	-	-
9	Fifth	684 ft 6 in.	-	-	-

The third digit, C, is simply a sequence number.

Example:

4.3.4. represents the turbine building (A = 4) at Elevation 586 ft 6 in. (B = 3) and is the fourth item (C = 4) in the series of items listed.

TABLE 12.1-7 CALCULATED MULTIGROUP NEUTRON AND GAMMA RAY FLUX OUTSIDE REACTOR PRESSURE VESSEL (3499 MWt)

GROUP	Upper Energy (eV)	Flux neutrons/cm^2/sec	Upper Energy (eV)	Flux photons/cm^2/sec
1	1.50E+07	1.35E+05	1.00E+07	8.39E+06
2	1.22E+07	4.50E+05	8.00E+06	8.14E+07
3	1.00E+07	9.78E+05	6.50E+06	8.03E+07
4	8.18E+06	1.86E+06	5.00E+06	8.98E+07
5	6.36E+06	2.54E+06	4.00E+06	1.57E+08
6	4.96E+06	1.93E+06	3.00E+06	1.17E+08
7	4.06E+06	3.14E+06	2.50E+06	3.39E+08
8	3.01E+06	3.55E+06	2.00E+06	2.67E+08
9	2.46E+06	1.13E+06	1.66E+06	3.19E+08
10	2.35E+06	6.81E+06	1.33E+06	4.07E+08
11	1.83E+06	2.25E+07	1.00E+06	3.11E+08
12	1.11E+06	6.45E+07	8.00E+05	4.04E+08
13	5.50E+05	1.83E+08	6.00E+05	7.54E+08
14	1.11E+05	1.31E+08	4.00E+05	4.99E+08
15	3.35E+03	3.49E+07	3.00E+05	7.81E+08
16	5.83E+02	3.07E+07	2.00E+05	7.61E+07
17	1.01E+02	2.02E+07	1.00E+05	3.78E+07
18	2.90E+01	1.42E+07	5.00E+04	2.78E+04
19	1.07E+01	1.49E+07		
20	3.06E+00	9.73E+06		
21	1.12E+00	7.31E+06		
22	4.14E-01	2.15E+07		

TABLE 12.1-8 SUMMARY OF SHIELD DESIGN IN REACTOR AND AUXILIARY BUILDINGS (3499 MWt)

Floor	Name of Cell	Main Equipment in Cell	Operating Conditions	Source Strength (Ci)	Source Geometry	Source Type[a]	Location of Wall	As-Built Wall Thickness	Design Level in Overall Area (mrem/hr)	Design Level at Surface (mrem/hr)	Notes[b]
Subb	HPCI room	HPCI turbine	HPCI-turbine testing	1.45	Point	N-16	Ceiling	2 ft	30	30	-
Subb	RHR pump rooms	RHR pump	Shutdown, after 4-hr decay	46	Cyl	FP, CP	Ceiling	2 ft	2	2	-
Subb	Core spray rooms	RCIC pumps and turbine	RCIC-turbine testing	1.5	Cyl and line	N-16	Ceiling	2 ft 6 in.	2	2	-
Subb	Torus region	Drywell streaming suppression pool	Normal RCIC operation	- 39.9	- Cyl	N-16 N-16	4 corners -	3 ft 3 in. -	1.5 -	1.5 -	A A
B	CRD pump room	Streaming from below	HPCI-turbine testing	-	-	N-16	N, S, E	2 ft	30	30	-
1	Neutron monitor room	Irradiated TIP probe and cable	Withdrawal of TIP	3672	Point and line	-	E, S, W	3 ft	2	2	B
1,2	Steam tunnel	4 steam lines	Normal	139	Line	N-16	Sides	4 ft 8 in.	0.5	0.5	C
1,2	RHR rooms	RHR heat exchangers	Reactor shutdown	14.8	Cyl	FP, CP	Main Outer	2 ft 3 in. 3 ft	2 0.5	2 0.5	D
2	RWCU pumps	RWCU recirc. pumps	Normal	0.12	Cyl	FP, CP	N, S, W	1 ft 6 in.	0.5	0.3	-
2	RWCU piping	RWCU lines to pumps	Normal	0.4	Line	FP, CP	N, S	1 ft 6 in.	0.5	0.5	-
2	RWCU holdup	Holdup line	Normal	27	Line	N-16	E W	4 ft 4 ft 6 in.	0.5 0.5	0.5 0.5	- -
2	RWCU heat exchangers	Heat exchangers	Normal	232	Cyl	FP, CP	E, W	2 ft	0.5	0.3	-
2	RWCU separators	Phase separators	Normal	9589	Cyl	FP, CP	N S	4 ft 3 ft	0.5 4	0.5 4	E E
2	RWCU sludge pump room	Sludge in pump and lines	Intermittent sludge discharge	1734	Cyl and line	FP, CP	N S	4 ft 2 ft	0.5 1	0.5 1	- -
3	Fuel pool heat exchangers	Fuel pool heat exchangers	Normal	2.2	Cyl	FP, CP	N, S, W	2 ft	0.5	0.3	F
3,4	Fuel storage pool	Spent fuel	Fuel decay	1×10^9	Slab	FP	N E W	6 ft 6 ft 4 in. 6 ft 4 in.	1 1 0.5	0.6 0.6 <0.5	G G G
4,5	Steam dryer pool	Steam dryer and separator	Refueling	2.2×10^5	Cyl	-	S,E,W	3 ft	0.5	0.5	B
4	RWCU demineralizer	Filter demineralizers	Normal	2346	Cyl	FP,CP	N S W	4 ft 4 ft 3 ft	0.5 0.5 8	0.5 0.3 8	E E E
5	SGTS cells	Charcoal and HEPA filters	During a LOCA	8.5×10^5	Point	FP	N, E walls floors	4 ft 6 in. 6 ft	50 (Max) <5 Rem	- -	H,I H,J

[a] FP = Fission Products.
CP = Corrosion Products.
[b] The following notes apply as indicated:

TABLE 12.1-8 SUMMARY OF SHIELD DESIGN IN REACTOR AND AUXILIARY BUILDINGS (3499 MWt)

A. Main source, which is radiation streaming from the main recirculating lines in drywell, determines shield thicknesses. Secondary RCIC source is present for about 0.5 hr per month

B. Source is maximum value of irradiated steel activation products, with no decay

C. Source values given for portion of tunnel in reactor and auxiliary buildings

D. Source strength is maximum value, when unit starts (4 hr decay). Hence, design doses are also maximum values

E. Source values for one tank or unit

F. Source strength (in "effective Ci") is based on measurements of crud deposition at Dresden operating units

G. Source is one-half of a core, with 7-day decay

H. Source value (per cell) is given at a 2-hr decay time post-LOCA

I. Criteria is maximum dose rate of 50 mrem/hr, which occurs when SGTS source is maximum

J. Criterion is less that 5 rem to personnel in main control room, over 30 days.

K. With Hydrogen Water Chemistry in operation, the calculated N-16 steam sources will increase by a maximum factor of six; the design levels are original design-bases values, without Hydrogen Water Chemistry

TABLE 12.1-9 SUMMARY OF SHIELD DESIGN IN TURBINE BUILDING (3499 MWt)

Floor	Name of Cell	Main Equipment in Cell	Source Strength (Ci)	Source Geometry	Source Type[a]	Location of Wall	As-Built Wall Thickness	Design Level in Overall Area (mrem/hr)	Design Level at Surface (mrem/hr)	Recommended Wall Thickness	Notes[b]
B	Condensate tank	Backwash tank	61	Cyl	FP, CP	North, South	2 ft 6 in.	0.5	0.17	2 ft 3 in.	A
B	Pump (2)	Offgas pumps	0.8	Line	N-16	East	2 ft 8 in.	0.5	0.3	2 ft 8 in.	-
1	West drains cooler	Drains cooler	0.5	Cyl	N-16	North	3 ft 6 in.	0.5	0.25	3 ft 6 in.	-
1	Central drains cooler	Drains cooler	0.16	Cyl	N-16	North	3 ft 6 in.	0.5	0.25	3 ft	-
1	East drains cooler	Drains cooler	0.05	Cyl	N-16	North	3 ft 6 in.	0.5	0.17	2 ft 3 in.	-
1	Cond. demineralizers	Demineralizers	41	Cyl	FP, CP	West	3 ft 3 in.	0.5	0.13	3 ft 3 in.	-
1	Heater drain pumps	Heater seal tank	3.6	Cyl	N-16	East	3 ft 6 in.	0.5	0.13	3 ft 6 in.	A
1	Offgas air ejectors	Steam-jet air ejector	8	Cyl	N-16	North	7 ft	0.5	0.13	5 ft 9 in.	B
1	Gland seal	A) Condenser	3	Cyl	N-16	East	4 ft 9 in.	0.5	0.13	4 ft 9 in.	-
		B) Drains tank	1	Cyl	N-16						
1	Vacuum pump	Vacuum pumps	0.11	Cyl	N-16						
			0.02	Cyl	0-19	North	4 ft	0.5	0.2	4 ft	C
			0.005	Cyl	FP						
1	Reactor feed pumps	Reactor feed pump turbine	7	Cyl	N-16	East	4 ft 6 in.	0.5	0.13	4 ft 3 in.	D
2	Offgas system	All equipment and lines	867	Cyls and Lines	N-16	North	8 ft	0.5	0.17	7 ft	E
2	Feedwater heaters	A) No. 3 heater	23	Cyl	N-16						-
		B) No. 4 heater	28	Cyl	N-16	East	6 ft	0.5	0.25	6 ft	-
		C) No. 5 heater	66	Cyl	N-16						-
2	Steam tunnel	Steam lines and header	163	Line	N-16	North	5 ft	0.5	0.5	5 ft	F
2	Main N-S pipe chase	(A) Misc. lines	--	Line	N-16						
		(B) Reheater seal tank	5	Cyl	N-16	South	5 ft	0.5	0.3	4 ft 8 in.	-
3	Reheaters	Reheater	383	Cyl	N-16	East	5 ft 6 in.	0.5	0.17	5 ft 6 in.	-
3	Feedwater heaters	No. 6 heater	31	Cyl	N-16	East	5 ft 9 in.	0.5	0.25	5 ft 9 in.	-
3	Sand filters	Filters	329	Cyl	FP	West	4 ft 3 in.	0.5	0.25	3 ft 9 in.	-
3	Offgas chillers	Chillers	24	Cyl	FP	North	3 ft 9 in.	0.5	0.25	3 ft 3 in.	-

TABLE 12.1-9 SUMMARY OF SHIELD DESIGN IN TURBINE BUILDING (3499 MWt)

Floor	Name of Cell	Main Equipment in Cell	Source Strength (Ci)	Source Geometry	Source Type[a]	Location of Wall	As-Built Wall Thickness	Design Level in Overall Area (mrem/hr)	Design Level at Surface (mrem/hr)	Recommended Wall Thickness	Notes[b]
3	Offgas adsorbers	Charcoal units	5508	Cyl	FP	North	2 ft 6 in.	0.5	0.5	2 ft	-
						East	2 ft 9 in.	0.5	0.5	2 ft 6 in.	-

[a] FP = Fission Products.
CP = Corrosion Products.

[b] Notes apply as indicated:

A. Values are given for "worst" (north) cell: other cells have less activity

B. Values are given for one cell, but all cells are typically the same

C. Values are given for startup condition, i.e., maximum sources

D. Values are given for "worst" (low-power) condition: sources are less at full power

E. Various pieces of equipment, such as recombiner, preheater, condenser, aftercooler, and other associated equipment

F. Values are given only for that portion of tunnel inside turbine building.

G. With Hydrogen Water Chemistry in operation, the calculated N-16 steam sources will increase by a maximum factor of six; the design levels are original design-bases values, without Hydrogen Water Chemistry.

TABLE 12.1-10 SUMMARY OF SHIELD DESIGN IN RADWASTE BUILDING (3499 MWt)

Floor	Name of Cell	Main Equipment in Cell	Source Strength (Ci)	Source Geometry	Location of Wall	As-Built Wall Thickness	Design Level in Overall Area (mrem/hr)	Design Level at Surface (mrem/hr)	Recommended Wall Thickness	Notes[a]
B	Condensate phase separator	Phase separators	223.6[b]	Cyl	E	3 ft 3 in.	0.5	0.3	2 ft 6 in.	-
B	Waste oil tank	Waste oil tank	0.018	Cyl	S	12 in.	8.0	4.0	1 in.	-
B	Chemical waste tank	Waste tank	0.004	Cyl	S	12 in.	8.0	4.0	6 in.	-
B	Waste clarifier	Waste clarifier tank	10.2	Cyl	S	2 ft 9 in.	8.0	4.0	11 in.	-
		Spent-resin tank	178.7	Cyl	S	2 ft 9 in.	8.0	4.0	2 ft 0 in.	-
B	Evaporator feed surge tank	Evaporator feed surge tank	0.77	Cyl	N	1 ft 4 in.	0.5	0.3	1 ft 4 in.	-
B	Sample tanks	Waste sample tanks	0.06[b]	Cyl	S and E	12 in.	0.5	0.3	3 in.	-
B	Centrifuge feed tank	Centrifuge feed tank	220.5	Cyl	W	3 ft 0 in.	0.5	0.3	3 ft 0 in.	K
B	Collector tanks	Waste collector tank	150.0	Cyl	N	2 ft 0 in.	8.0	4.0	1 ft 7 in.	-
		Floor drain collector tank	3.9	Cyl	N	2 ft 0 in.	0.5	0.3	1 ft 3 in.	-
B	Waste surge tank	Waste surge tank	10.2	Cyl	S	12 in.	0.5	0.3	10 in.	-
B	Concentrates feed tank	Concentrates feed tank	2.0	Cyl	N	1 ft 9 in.	0.5	0.3	1 ft 9 in.	-
B	Slurry feed tank	Slurry feed tank	178.7	Cyl	E	2 ft 6 in.	0.5	0.3	2 ft 6 in.	-
B	Waste pumps	Waste oil pump	0.005[c]	Line	S	12 in.	0.5	0.3	11 in.	-
		Chemical waste pump	0.099[c]	Line	S	12 in.	0.5	0.3	11 in.	-
B	Clarifier-cell pumps	Spent-resin transfer pump	41[c]	Line	S	1 ft 10 in.	0.5	0.3	1 ft 10 in.	-
		Waste clarifier sludge pump	2.4[c]	Line	S	1 ft 10 in.	0.5	0.3	1 ft 10 in.	M
		Slurry dilution pump	0.013[c]	Line	S	1 ft 10 in.	0.5	0.3	1 ft 10 in.	M
B	Centrifuge recirculation pumps	Centrifuge feed/recirculation pumps	15.4[b,c]	Line	N	2 ft 3 in.	0.5	0.3	2 ft 3 in.	G
B	Condensate sludge pumps	Condensate sludge discharge mix pumps	15.5[b,c]	Line	S	2 ft 10 in.	0.5	0.3	2 ft 0 in.	-
B	Spent-resin slurry pumps	Spent-resin slurry decant pump	0.017[b,c]	Line	N	10 in.	8.0	4.0	10 in.	-

TABLE 12.1-10 SUMMARY OF SHIELD DESIGN IN RADWASTE BUILDING (3499 MWt)

Floor	Name of Cell	Main Equipment in Cell	Source Strength (Ci)	Source Geometry	Location of Wall	As-Built Wall Thickness	Design Level in Overall Area (mrem/hr)	Design Level at Surface (mrem/hr)	Recommended Wall Thickness	Notes[a]
		Spent-resin slurry recirculation pump	82[c]	Line	N	10 in.	8.0	4.0	10 in.	-
B	Condensate decant pumps	Condensate decant pumps	0.005[b,c]	Line	S	1 ft 10 in.	0.5	0.3	1 ft 10 in.	-
B	Concentrates recirculation pump	Concentrates recirculation pump	0.69[c]	Line	N	12 in.	0.5	0.3	10 in.	-
1	Precoat filters	Floor drain collector Precoat filter	0.04	Cyl	N	2 ft 6 in.	0.1	0.1	1 ft 0 in.	-
		Waste collector Precoat filter	13.5	Cyl	N	2 ft 6 in.	0.1	0.1	2 ft 6 in.	-
1	Transfer cart	Waste drum	772.6[b]	Cyl	N, S and W	4 ft 0 in.	0.5	0.3	3 ft 6 in.	-
1	Drum storage aisles	Waste drums	772.6[b]	Cyl	W	4 ft 8 in.	0.5	0.3	3 ft 8 in.	B
1	Extruder/ evaporator	Extruder/ evaporator	2.27	Cyl	N	8 in.	0.5	0.3	8 in.	H,L
1	Turntable	Drums	73[b]	Cyl	N	3 ft 2 in.	0.5	0.3	3 ft 2 in.	A
					E	4 in.	8.0	4.0	4 in.	O
					W	2 ft 0 in.	8.0	4.0	2 ft 0 in.	P
1	Floor drain demineralizer	Demineralizer	146.0	Cyl	N	3 ft 6 in.	0.3	0.1	3 ft 5 in.	N
1	Capper/seamer	Drums	73[b]	Cyl	W	2 ft 6 in.	0.5	0.3	2 ft 6 in.	A
1	Etched-disk filter	Filters	2.1[b]	Cyl	N	2 ft 9 in.	0.3	0.1	2 ft 9 in.	-
1	Oil coalescer	Oil coalescers	9.7[b]	Cyl	N	2 ft 9 in.	0.3	0.1	2 ft 0 in.	J
1	Waste demineralizer	Demineralizer	146.0	Cyl	N	3 ft 6 in.	0.3	0.1	3 ft 6 in.	N
1	East fuel pool filter-demineralizer	Filter-demineralizer	19.8	Cyl	N	2 ft 9 in.	0.3	0.1	2 ft 9 in.	-
1	West fuel pool filter-demineralizer	Filter demineralizer	19.8	Cyl	N	2 ft 9 in.	0.3	0.1	2 ft 9 in.	-
1	Filter-demineralizer valve room	Pumps and lines	N/A	Point	E and W	2 ft 0 in.	0.5	0.25	2 ft 0 in.	-
				Cyl	S	2 ft 0 in.	8	0.25	2 ft 0 in.	C
1	Valve operating tunnel	Streaming radiation	N/A	N/A	S	2 ft 0 in.	0.5	0.25	1 ft 0 in.	-
1	Health Physics counting room	Misc. samples	0.001	Point	E	1 ft 0 in.	0.5	0.25	NA	D

TABLE 12.1-10 SUMMARY OF SHIELD DESIGN IN RADWASTE BUILDING (3499 MWt)

Floor	Name of Cell	Main Equipment in Cell	Source Strength (Ci)	Source Geometry	Location of Wall	As-Built Wall Thickness	Design Level in Overall Area (mrem/hr)	Design Level at Surface (mrem/hr)	Recommended Wall Thickness	Notes[a]
1	Health Physics spectrometer room	Misc. samples	0.001	Point	E	1 ft 0 in.	0.5	0.25	NA	D
1	Health Physics high-level lab	Misc. samples	0.1	Point	All	1 ft 0 in.	0.5	0.25	1 ft 0 in.	E
Mezz.	South evaporator	Evaporator	2.0	Cyl	E	2 ft 0 in.	0.3	0.1	1 ft 6 in.	-
Mezz.	North evaporator	Evaporator	2.0	Cyl	E	2 ft 0 in.	0.3	0.1	1 ft 6 in.	-
		Evaporator drains tank	2.0	Cyl	N and E	4 in.	8.0	4.0	4 in.	L
Mezz.	Centrifuge	Centrifuge	109.7	Cyl	N	2 ft 2 in.	0.5	0.3	2 ft 2 in.	F, I

[a] Notes apply as indicated:

A. Source strength based on condensate sludge. Value for RWCU sludge-filled drum is 772.6 Ci (only six times per year); value for waste demineralizer sludge-filled drum is 29.3 Ci; value for evaporator concentrates-filled drum is 0.7 Ci

B. Values given for westernmost storage aisle (30 drums per conveyor)

C. Design level at wall is well below overall design level to allow for streaming radiation through various wall penetrations

D. Sources are small enough that no shielding (other than distance effect) is required

E. In addition to walls of room, appropriate shadow shielding will be used around sources

F. Recommended thickness is for a composite wall of 21 in. of concrete with a density of 145 lb/ft^3 and 5 in. of steel

G. Source strength based on condensate phase separator dump to centrifuge feed tank. Value for dump from spent-resin tank is 7.89 µCi/cm^3; value for dump from RWCU phase separator is 148 µCi/cm^3 (only six times per year)

H. Source strength based on condensate phase separator processing. Value for waste demineralizer resin processing is 0.79 Ci; value for RWCU phase separator processing is 21.78 Ci (only six times per year); value for evaporator concentrates processing is 0.02 Ci

I. Source strength based on RWCU sludge. Value for processing of waste demineralizer sludge is 6.5 Ci; value for processing of condensate sludge is 11.8 Ci

J. Source strength based on lead waste collector coalescer. Value for second coalescer is 9.0 Ci; value for third coalescer is 2.7 Ci

K. Source strength based on condensate sludge processing. Value for RWCU sludge is 784 Ci (only six times per year)

L. Wall is lead-shot-filled steel-framed wall

M. Value based on spent-resin transfer pump

N. Additional shielding added to original wall to give equivalent of 3 ft 6 in. of concrete

O. Wall made of lead brick

P. Motor-operated shield doors made of 7 in. of steel.

[b] Values are per tank, per drum, per source, or per line.

[c] Values are in µCi/cm^3.

TABLE 12.1-11 THROUGH TABLE 12.1-13
HAVE BEEN INTENTIONALLY DELETED

TABLE 12.1-14 DIRECT MAIN CONTROL ROOM DOSES FOLLOWING A LOSS-OF-COOLANT ACCIDENT (3499 MWt)

		Integrated Dose From Following Sources				
Time After LOCA (days)	Occupancy Factor	SGTS (rem)	Primary Containment (rem)	Secondary Containment (rem)	Plume (rem)	Total[a] (rem)
		<<0.0001	<<0.0001	<0.0001	0.040	0.040

[a] Refers to Total Effective Dose Equivalent (TEDE) contribution, using R.G. 1.183 based analysis. Direct doses are doses as seen by main control room personnel, through various concrete walls and ceilings.

TABLE 12.1-15 PHOTON PRODUCTION RATE OF FISSION PRODUCTS IN THE REACTOR CORE, FOLLOWING FIVE YEARS OF OPERATIONS, AT VARIOUS TIMES AFTER SHUTDOWN (3430 MWt)

Group	Average Group Energy (MeV)	Total Photon Production Rate (photons/sec) After Shutdown				
		0 Time	1 Hr	1 Day	3 Days	7 Days
1	1.500(-2)[a]	2.134(20)	4.259(19)	1.504(19)	1.112(19)	9.200(18)
2	2.500(-2)	5.719(19)	1.571(19)	6.895(18)	4.940(18)	3.416(18)
3	3.500(-2)	4.666(19)	1.770(19)	1.113(19)	8.011(18)	5.562(18)
4	4.500(-2)	2.507(19)	6.599(18)	3.239(18)	2.497(18)	1.964(18)
5	5.500(-2)	1.952(19)	5.523(18)	2.615(18)	1.703(18)	1.134(18)
6	6.500(-2)	1.500(19)	3.173(18)	1.142(18)	8.297(17)	6.853(17)
7	7.500(-2)	1.451(19)	3.258(18)	9.210(17)	6.712(17)	5.545(17)
8	8.500(-2)	1.540(19)	4.961(18)	3.327(18)	2.694(18)	1.813(18)
9	9.500(-2)	3.084(19)	6.862(18)	2.674(18)	2.081(18)	1.732(18)
10	1.500(-1)	7.700(19)	2.402(19)	1.168(19)	8.807(18)	6.254(18)
11	2.500(-1)	6.371(19)	2.033(19)	9.048(18)	4.032(18)	1.838(18)
12	3.500(-1)	4.179(19)	1.039(19)	5.283(18)	4.300(18)	3.191(18)
13	4.750(-1)	6.795(19)	2.629(19)	1.336(19)	9.777(18)	7.611(18)
14	6.500(-1)	8.169(19)	4.622(19)	2.038(19)	1.027(19)	6.193(18)
15	8.250(-1)	5.807(19)	3.275(19)	1.616(19)	1.415(19)	1.295(19)
16	1.000	3.082(19)	1.077(19)	2.139(18)	1.251(18)	7.909(17)
17	1.225	3.379(19)	7.603(18)	1.355(18)	4.838(17)	1.992(17)
18	1.475	4.060(18)	1.655(19)	6.976(18)	6.200(18)	4.993(18)
19	1.700	9.139(18)	2.282(18)	1.577(17)	1.591(16)	5.000(15)
20	1.900	6.102(18)	2.551(18)	2.154(17)	7.678(16)	3.196(16)
21	2.100	6.830(18)	1.729(18)	7.771(16)	6.207(16)	5.320(16)
22	2.300	4.961(18)	1.893(18)	6.212(16)	5.299(16)	4.358(16)
23	2.500	5.404(18)	1.816(18)	2.248(17)	2.107(17)	1.751(17)
24	2.700	2.734(18)	5.266(17)	1.157(15)	5.766(14)	2.837(14)
25	3.000	5.986(18)	7.868(17)	7.190(15)	6.628(15)	5.517(15)
26	6.143	3.348(18)	1.021(16)	3.485(13)	2.417(08)	1.162(-2)
27	7.112	0.000	0.000	0.000	0.000	0.000
Total		9.776(20)	3.129(20)	1.341(20)	9.424(19)	6.959(19)

[a] 1.500(-2) = 1.500×10^{-2}.

TABLE 12.1-16 DOSE AT SITE BOUNDARY FROM STORED WASTE

$D = 2 \times 10^{-12}$ mrem/hr/Ci of waste, or

$D^1 = 1.8 \times 10^{-8}$ mrem/year/Ci of waste, with a 100 percent occupancy factor

Assumptions:

A. Minimum site boundary distance is 4000 ft

B. Minimum concrete thickness surrounding the drums is 4 ft (north wall of radwaste building)

C. Average gamma ray energy of 1.5 MeV used

D. Photon attenuation and appropriate buildup factors for both air and concrete walls were used

E. Waste drums stored inside building. No drums are to be stored outside

F. Gamma ray self-absorption in the drum is taken into account. Each drum consists of a mixture of water, cement aggregate, and radioactive sludge, resulting in a concrete mixture.

TABLE 12.1-17 DOSE AT SITE BOUNDARY FROM CONDENSATE STORAGE TANKS

Dose rate per tank = 2×10^{-7} mrem/hr, or

Dose rate per tank = 1.8×10^{-3} mrem/year

Assuming 100 percent occupancy factor

Assumptions:

A. Tanks contain their maximum concentrations of 0.001 $\mu Ci/cm^3$

B. Each tank contains its full volume of liquid (600,000 gal), thereby giving a maximum content of 2.3 Ci per tank

C. Distance between tanks and site boundary is 4400 ft. This is the minimum distance which is not interrupted by any of the concrete buildings. In other words, it is the nearest point at which the tanks could be "seen" by a person at the site boundary.

TABLE 12.1-18 DOSE RATES AT VARIOUS POSITIONS NEAR FERMI 2 (3499 MWt)

			Dose Rates, mrem/hr							
	Source	Point No[a].	A[b]	B[c]	C	D	E	F	G	H
Source Description	Strength (photon/sec)	Distance (ft)	120	300	500	900	1200	2600	3600	4560
Low-pressure turbines (3)	1.65E+12		9.9E-05	5.2E-04	1.7E-03	5.7E-04	1.0E-04	1.7E-06	1.4E-07	4.4E-08
High-pressure turbines	2.35E+12		1.0E-04	6.2E-04	1.6E-03	4.7E-04	1.2E-04	2.2E-06	1.6E-07	3.8E-07
Crossover pipes	1.84E+12		4.0E-03	4.2E-02	6.2E-02	2.8E-02	8.6E-03	4.8E-04	1.0E-04	6.3E-05
High-pressure turbine inlet lines	3.06E+12		8.2E-04	5.2E-03	1.6E-02	5.4E-03	1.3E-03	4.2E-05	3.3E-06	1.5E-06
Reheaters (2)	1.53E+14		1.9E-02	1.1E-01	1.5E-01	4.5E-02	3.4E-02	2.0E-03	2.8E-04	4.9E-05
Total	1.62E+14		2.4E-02	1.5E-01	2.3E-01	7.9E-02	4.4E-02	2.6E-03	3.8E-04	1.1E-04

[a] For point designations, see Figure 12.1-2. Distances are measured to the center of the turbine reheater complex.

[b] Point at third floor aisleway of turbine building: photon attenuation through 8-in. concrete roof included in calculation.

[c] Point at center of main office building. Calculations account for the shadowing effect of the outer (eastern) wall of the turbine building.

[d] With Hydrogen Water Chemistry in operation, these N-16 estimates will increase up to factor of six.

TABLE 12.1-19 CALCULATED OPERATOR EXPOSURE DURING ROUTINE ROUNDS IN REACTOR BUILDING

Equipment	Expected Dose Rate (mrem/hr)	Time[a] (minutes/year)	Exposure (man-rem/year)
HPCI turbine and pump	0.15	4368	0.011
CRD pumps	0.15	2184	0.005
RBCCW heat exchangers	0.15	1092	0.003
Emergency control air compressor	0.15	2184	0.005
RBCCW pumps	0.15	1092	0.003
RBCCW expansion tank	0.15	546	0.001
CRD hydraulic control units	0.15	1092	0.003
Railroad access	0.15	546	0.001
Personnel changing rooms	0.15	1092	0.003
Relay room	0.15	5460	0.014
Motor-generator sets	0.15	4368	0.011
Battery room	0.15	4368	0.011
Computer room	0.15	2184	0.005
Air conditioning equipment	0.15	2184	0.005
Recirc. motor-generator sets	0.15	4368	0.011
SGTS	0.15	4368	0.011
Refueling floor	0.15	5460	0.014
CRD filters	0.15	2184	0.005
Switchgear room	0.15	1092	0.003
RWCU demin. resin tank	0.30	2184	0.011
RHR pumps	0.50	3276	0.027
Core spray pumps	0.50	3276	0.027
RCIC pump and turbine	0.50	3276	0.027
RWCU hold pump	0.50	2184	0.018
Sump pumps	0.50	2184	0.018
Air coolers	0.50	1092	0.009
Instrument racks	0.50	546	0.004
RWCU sludge pumps	1.0	2184	0.036

TABLE 12.1-19 CALCULATED OPERATOR EXPOSURE DURING ROUTINE ROUNDS IN REACTOR BUILDING

Equipment	Expected Dose Rate (mrem/hr)	Time[a] (minutes/year)	Exposure (man-rem/year)
CRD storage and repair	2.0	2184	0.073
RWCU demin. tank	22[b]	546	0.200
RWCU heat exchangers	22[b]	546	0.200
RHR heat exchangers	22[b]	1092	0.400
Primary containment	22[b]	546	0.200
RWCU phase separator	22[b]	3276	1.201
		Total[c]	2.58

[a] Assumes the rounds are performed once per shift every day of the year.

[b] Values do not include major maintenance. They do consider access to an area or piece of equipment, averaged over a year, both during shutdown and during the time the equipment is still in operation but the reactor is at partial load. It is estimated that, over a year, 10 percent of personnel time (in a given cell) will be in a field of 125 mrem/hr, 10 percent in a field of 55 mrem/hr and 80 percent in a field of 5 mrem/hr.

[c] Total is based on 1346.8 man-hours available. Total man-hour availability for operators is 52,416 man-hours.

TABLE 12.1-20 CALCULATED OPERATOR EXPOSURE DURING ROUTINE ROUNDS IN RADWASTE BUILDING

Equipment	Expected Dose Rate (mrem/hr)	Time[a] (minutes/year)	Exposure (man-rem/year)
Waste collector pump	0.15	1092	0.003
Floor drain collector pump	0.15	1092	0.003
Waste sample pumps	0.15	1092	0.003
Floor drain sample pump	0.15	546	0.001
Waste surge pump	0.15	1092	0.003
Equipment drain sump pump	0.15	1092	0.003
Chemical waste pump	0.15	1092	0.003
Emergency floor drain sump pump	0.15	546	0.001
Waste sludge discharge mixing pump	0.15	1092	0.003
Spent-resin pump	0.15	546	0.001
Radwaste control room	0.15	10,920	0.027
Demineralizer precoat tank	0.15	546	0.001
Precoat pump	0.15	1092	0.003
Resin tank	0.15	546	0.001
Waste precoat pump	0.15	546	0.001
Waste filter aid pump	0.15	546	0.001
Filter aid tank	0.15	10,920	0.027
Health Physics lab.	0.15	2184	0.005
Solid waste baler	0.15	1092	0.003
Drum rolling machine	0.15	1092	0.003
Misc. tanks	0.15	1092	0.003
Switchgear room	0.15	2184	0.005
Air conditioning equipment	0.15	2184	0.005
Ventilation equipment	0.15	2184	0.005
Fuel pool filter demineralizer	47.0[b]	1092	0.855
Floor drain collector tank	47.0[b]	546	0.428
Waste collector tank	47.0[b]	546	0.428
North and south waste sample tank	3.0	546	0.027
Floor drain sample tank	3.0	546	0.027
Waste surge tank	0.6	546	0.006
Condensate phase separators	47.0[b]	1092	0.855

TABLE 12.1-20 CALCULATED OPERATOR EXPOSURE DURING ROUTINE ROUNDS IN RADWASTE BUILDING

Equipment	Expected Dose Rate (mrem/hr)	Time[a] (minutes/year)	Exposure (man-rem/year)
Chemical waste tank	6.0	546	0.055
Spent-resin tank	47.0[b]	546	0.428
Condensate phase decant pump	47.0[b]	546	0.428
Condensate phase sludge Discharge mixing pump	47.0[b]	546	0.428
Fuel pool filter demineralizer	47.0[b]	546	0.428
Waste demineralizer	47.0[b]	546	0.428
Waste collector filter	47.0[b]	546	0.428
Drum mixing	47.0[b]	546	0.428
Drum capping	47.0[b]	546	0.428
Drum storage	47.0[b]	546	0.428
Floor drain demineralizer	47.0[b]	546	0.428
Waste hopper	47.0[b]	546	0.428
Floor drain filter	6.0	546	0.055
Evaporators	3.0	546	0.027
Centrifuge	47.0[b]	1092	0.855
		Total[c]	8.443

a Assumes the rounds are performed once per shift every day of the year.

b It is estimated that, over a year's time, about 50 percent of personnel time is spent in a field of 80 mrem/hr, 30 percent in a field of 20 mrem/hr, and 20 percent in a field of 5 mrem/hr. For areas with design levels below 20 mrem/hr, the average level was estimated to be one-third of the maximum design level.

c Total is based on 1055.8 man-hours available (Column 2). Total man-hour availability for operators is 52,416 man-hours.

TABLE 12.1-21 CALCULATED OPERATOR EXPOSURE DURING ROUTINE ROUNDS IN TURBINE BUILDING

Equipment	Expected Dose Rate (mrem/hr)	Time[a] (minutes/year)	Exposure (man-rem/year)
Instruments and controls	0.15	5460	0.014
Generator CO_2 unit	0.15	546	0.001
Station air compressor	0.15	1092	0.003
Heater feed pumps	0.15	1092	0.003
Demineralizer control	0.15	4368	0.011
Demineralizer pumps and valves	0.15	1092	0.003
MTG lubrication system	0.15	2184	0.005
Hatch area above demin. tanks	0.15	1092	0.003
Stator cooling equipment	0.5	1092	0.01
H2 seal oil equipment	0.15	1092	0.003
Heater shell pull space	0.15	546	0.001
TBCCW heat exchanger and pumps	0.15	1092	0.003
TBCCW expansion tank	0.15	1092	0.003
Ventilation equipment	0.15	2184	0.005
Demineralizer precoat and resin tanks	0.15	2184	0.005
Demineralizer precoat pumps	0.15	1092	0.003
Offgas refrigeration units	0.15	1092	0.003
Sump pumps	0.5	2184	0.018
Reactor feed pump turbine lube system	0.5	1092	0.009
MTG lube oil cooler	0.5	546	0.004
Miscellaneous equipment	0.5	2184	0.018
Main generator and excitation equipment	0.50	3276	0.027
MTG unitized actuators - stop and throttle valves	5.0	3276	0.273
Heater drain pumps	38[b]	1092	0.692
Heater drains flash tanks	38[b]	546	0.346
Condenser water box	38[b]	546	0.346
Circ. water isolation valves	38[b]	546	0.346
Reactor feed pumps and turbines	38[b]	4368	2.766
Drain coolers	38[b]	546	0.346
Powdex demineralizer tanks	38[b]	109	0.069

TABLE 12.1-21 CALCULATED OPERATOR EXPOSURE DURING ROUTINE ROUNDS IN TURBINE BUILDING

Equipment	Expected Dose Rate (mrem/hr)	Time[a] (minutes/year)	Exposure (man-rem/year)
Mech. vacuum pumps	38[b]	2184	1.383
Steam-jet air ejectors	38[b]	546	0.346
Feedwater heaters (all)	38[b]	2184	1.383
Offgas system	38[b]	6552	4.150
Reheater seal tank	38[b]	1092	0.692
Gland steam condenser	38[b]	546	0.346
Main turbine	38[b]	2184	1.383
Reheater separators	38[b]	1092	0.692
		Total[c]	15.71

a Assumes rounds are performed once per shift every day of the year.

b It is estimated that, over a year, 10 percent of personnel time (in a given cell) will be in a field of 110 mrem/hr, 50 percent in a field of 50 mrem/hr, and 40 percent in a field of 5 mrem/hr.

c Total is based on 1084.7 man-hours available. Total man-hours available for operators is 52,416 man-hours.

TABLE 12.1-22 CALCULATED OPERATOR EXPOSURE DURING MINOR REPAIR OF ISOLATED COMPONENTS IN REACTOR BUILDING

Equipment	Expected Dose Rate (mrem/hr)	Time (minutes/year)	Exposure (man-rem/year)
HPCI turbine and pump	0.15		
CRD pumps	0.15		
RBCCW heat exchangers	0.15		
Emergency control air comp.	0.15		
RBCCW pumps	0.15		
RBCCW expansion tank	0.15		
CRD hydraulic control units	0.15		
Railroad access	0.15		
Personnel changing rooms	0.15		
Relay room	0.15	2184	0.005
Motor-generator sets	0.15		
Battery rooms	0.15		
Computer room	0.15		
Air conditioning equipment	0.15		
Recirculation M-G sets	0.15		
SGTS	0.15		
Refueling floor	0.15		
CRD filters	0.15		
Switchgear room	0.15		
RWCU demin. resin tank	0.3	208	0.001
RHR pumps	0.5		
Core spray pumps	0.5		
RCIC pump and turbine	0.5		
RWCU hold pump	0.5	780	0.006
Sump pumps	0.5		
Air coolers	0.5		
Instrument racks	0.5		
RWCU sludge pumps	1.0	1440	0.024
RHR heat exchangers	1.0		
CRD storage and repair	2.0	600	0.020
RWCU demineralizer tank	2.0		
RWCU heat exchangers	22.0[a]	2160	0.729
RWCU phase separator	22.0		
		Total[b]	0.84

TABLE 12.1-22 CALCULATED OPERATOR EXPOSURE DURING MINOR REPAIR OF ISOLATED COMPONENTS IN REACTOR BUILDING

[a] It is estimated, over a year, that 10 percent of personnel time (in a given cell) will be in a field of 125 mrem/hr, 10 percent in a field of 55 mrem/hr, and 80 percent in a field of 5 mrem/hr.

[b] Total is based on 122.9 man-hours available. Total of man-hours available for the operators is 52,416 man-hours.

TABLE 12.1-23 CALCULATED OPERATOR EXPOSURE DURING MINOR REPAIR OF ISOLATED COMPONENTS IN RADWASTE BUILDING

Equipment	Expected Dose Rate (mrem/hr)	Time (minutes/year)	Exposure (man-rem/year)
Waste collector dump	0.15	2392.0	0.009
Flood drain collector pump	0.15		
Waste sample pumps	0.15		
Floor drain sample pump	0.15		
Waste surge pump	0.15		
Equipment drain sump pump	0.15		
Chemical waste pump	0.15		
Emergency floor drain sump pump	0.15		
Waste sludge discharge mixing pump	0.15		
Spent-resin pump	0.15		
Radwaste control room	0.15		
Demineralizer precoat tank	0.15		
Precoat pump	0.15		
Resin tank	0.15		
Waste precoat	0.15		
Waste filter aid pump	0.15		
Filter aid tank	0.15		
Health Physics lab	0.15		
Solid waste baler	0.15		
Drum rolling machine	0.15		
Miscellaneous tanks	0.15		
Switchgear room	0.15		
Air conditioning equipment	0.15		
Ventilation equipment	0.15		
Floor drain collector tank	2.0	60	0.002
Waste collector tank	2.0	60	0.002
North and south water sample tank	2.0	120	0.004
Floor drain sample tank	2.0	60	0.002
Waste surge tank	2.0	60	0.002
Condensate phase separators	2.0	180	0.006
Chemical waste tank	2.0	60	0.002
Spent-resin tank	2.0	60	0.002
Condensate phase decanting pump	2.0	120	0.004
Condensate phase sludge discharge mixing pump	2.0	120	0.004

TABLE 12.1-23 CALCULATED OPERATOR EXPOSURE DURING MINOR REPAIR OF ISOLATED COMPONENTS IN RADWASTE BUILDING

Equipment	Expected Dose Rate (mrem/hr)	Time (minutes/year)	Exposure (man-rem/year)
Fuel pool filter-demineralizer	2.0	120	0.004
Waste demineralizer	2.0	120	0.004
Waste collector filter	2.0	60	0.002
Floor drain filter	2.0	60	0.002
Evaporators	2.0	180	0.006
Centrifuge	2.0	180	0.006
Drum mixing	10.0	9360	1.560
Drum capping	10.0		
Drum storage	10.0		
		Total[a]	1.62

[a] Total is based on 222.9 man-hours available. Total of man-hours available for operators is 52,416 man-hours.

TABLE 12.1-24 CALCULATED OPERATOR EXPOSURE DURING MINOR REPAIR OF ISOLATED COMPONENTS IN TURBINE BUILDING

Equipment	Expected Dose Rate (mrem/hr)	Time (minutes/year)	Exposure (man-rem/year)
Instruments and controls	0.15		
Generator CO_2 unit	0.15		
Station air compressor	0.15		
Heater feed pumps	0.15		
Demineralizer control	0.15		
Demineralizer pumps and valve	0.15		
MTG lubrication system	0.15		
Hatch area above demineralizer tanks	0.15		
H_2 seal oil equipment	0.15	1092	0.003
Heater shell pull space	0.15		
TBCCW heat exchanger and pump	0.15		
TBCCW expansion tank	0.15		
Ventilation equipment	0.15		
Demin. precoat and resin tank	0.15		
Demin. precoat pumps	0.15		
Offgas refrigeration units	0.15		
Sump pumps	0.5		
Reactor feed pump turbine lube system	0.5		
MTG lube oil cooler	0.5	312	0.003
Miscellaneous equipment	0.5		
Stator cooling equipment	0.5		
Main generator and excitation equipment	0.5		
Reactor feed pumps and turbine	2.0	4320	0.144
Drains coolers	2.0	720	0.024
Mechanical vacuum pumps	2.0	2880	0.096
Steam-jet air ejectors	2.0	1440	0.048
Feedwater heaters (3, 4, 5, 6)	2.0	4320	0.144
Gland steam condenser	38.0[a]	720	0.456
MTG unitized actuators -stop and throttle valves	5.0	156	0.013
Heater drain pumps	2	240	0.008

TABLE 12.1-24 CALCULATED OPERATOR EXPOSURE DURING MINOR REPAIR OF ISOLATED COMPONENTS IN TURBINE BUILDING

Equipment	Expected Dose Rate (mrem/hr)	Time (minutes/year)	Exposure (man-rem/year)
Heater drain flash tanks	2	120	0.004
Condenser water box	38[a]	360	0.228
Circulating water isolation valves	38[a]	60	0.038
Reheater seal tank	38[a]	120	0.076
Main turbine	38[a]	360	0.228
Reheater/separators	38[a]	240	0.152
		Total[b]	1.67

[a] It is estimated that, over a year, 10 percent of personnel time (in a given cell) will be in a field of 110 mrem/hr, 50 percent in a field of 50 mrem/hr, and 40 percent in a field of 5 mrem/hr.

[b] Total is based on 293.6 man-hours available. Total of man-hours available for operators is 52,416 man-hours.

TABLE 12.1-25 FERMI 2 PERSONNEL EXPOSURES CALCULATED FOR REMAINING MAN-HOURS

Personnel Category	Number of Personnel	Exposure (man-rem/year)
Administration	13	2.60[a]
Operations	32	5.23[b]
Radiation Protection supervision	3	3.00[c]
Equipment division	3	0.60[a]
	8	2.86[d]
	3 (QA personnel)	1.78[e]
Maintenance (electrical, mechanical, instrumentation and control)	20	1.83[f]
	Total[g]	18.37

[a] Assumes each person available 2000 man-hours per year while in a radiation field of 0.1 mrem/hr.

[b] Assumes 30 personnel receive 0.1 mrem/hr for remainder of man-hours not accounted for in Tables 12.1-19 through 12.1-24(48,289 man-hours), and that two supervisory personnel receive a total of 0.4 man-rem for 1 year (i.e., each person available 2000 hr per year while in a radiation field of 0.1 mrem/hr).

[c] Assumes each person accumulates 1 rem per year.

[d] Assumes these personnel receive 30 percent of total operations personnel exposure per man, i.e., sum of total exposures listed Tables 12.1-19 through 12.1-24, divided by 30 personnel, yielding an average of 1.19 rem/man per year. Thus, each of eight personnel in this category will receive an average of 0.357 rem/year.

[e] Assumes QA engineer, assistant QA engineer, and QA technician receive 25, 50, and 75 percent of total operational personnel exposure per man, respectively. That is, sum of 25 percent, 50 percent, and 75 percent of 1.19 rem/year per man (see d.) is 1.78 man-rem/year.

[f] Assumes maintenance personnel receive 0.1 mrem/hr for remaining man-hours available not accounted for in Tables 12.1-26 through 12.1-28 (i.e., 18,340 man-hours).

[g] Total based on available man-hours left over from required operational and maintenance functions. Radwaste personnel and Radiation Protection personnel (i.e., supervisor and technicians) included in other tables and Subsection 12.1.5.2.2.

TABLE 12.1-26 CALCULATED MAINTENANCE PERSONNEL EXPOSURE IN REACTOR BUILDING

Equipment	Expected Dose Rate (mrem/hr)	Time (hr/year)	Exposure (man-rem/year)
HPCI turbine and pump	0.15	80	0.012
CRD pumps	0.15	40	0.006
RBCCW heat exchangers	0.15	40	0.006
Non-Interruptible control air compressor	0.15	40	0.006
RBCCW pumps	0.15	40	0.006
RBCCW expansion tank	0.15	20	0.003
CRD hydraulic control units	0.15	80	0.012
Railroad access	0.15	40	0.006
Personnel changing rooms	0.15	60	0.009
Relay room	0.15	80	0.012
Main control room	0.15	80	0.012
DC motor-generator sets	0.15	40	0.006
Battery rooms	0.15	40	0.006
Computer room	0.15	--	--
Air conditioning equipment	0.15	120	0.018
Recirculation motor-generator sets	0.15	120	0.018
Standby gas treatment	0.15[a]	80	0.012
Refueling floor	0.15	240	0.036
CRD filters	0.15	40	0.006
Switchgear rooms	0.15	80	0.012
Miscellaneous	0.15	400	0.060
RWCU resin tank	0.3	80	0.024
Miscellaneous	0.3	40	0.012
RHR pumps	0.5[a]	80	0.040
Core spray pumps	0.5[a]	80	0.040
RCIC pump and turbine	0.5[a]	80	0.040
RWCU holding pump	0.5[a]	40	0.020
Sump pumps	0.5	160	0.080
Air coolers	0.5	40	0.020
Instrument racks	0.5	80	0.040

TABLE 12.1-26 CALCULATED MAINTENANCE PERSONNEL EXPOSURE IN REACTOR BUILDING

Equipment	Expected Dose Rate (mrem/hr)	Time (hr/year)	Exposure (man-rem/year)
Miscellaneous	0.5	80	0.040
Reactor water sludge pump	1.0[a]	20	0.020
RHR heat exchanger	1.0[a]	40	0.040
Miscellaneous	1.0	20	0.020
CRD repair and storage	2.0	600	1.200
Miscellaneous	2.0	40	0.080
Miscellaneous	5.0	20	0.100
RWCU demineralizer tanks	2[a]	40	0.080
RWCU heat exchanger	2[a]	80	0.160
Reactor cleanup separator	2[a]	40	0.080
Primary containment	22[b]	400	8.800
		Total[c]	11.20

[a] Assumes that reactor is operating, but that equipment is isolated.

[b] Assumes reactor is shut down.

[c] Total is based on 3820 man-hours available. Total of man-hours available for maintenance personnel is 40,000 man-hours.

TABLE 12.1-27 CALCULATED MAINTENANCE PERSONNEL EXPOSURE IN RADWASTE BUILDING

Equipment	Expected Dose Rate (mrem/hr)	Time (hr/year)	Exposure (man-rem/year)
Waste collector pump	0.15	140	0.021
Floor drain collector pump	0.15	200	0.030
Waste sample pumps	0.15	140	0.021
Floor drain sample pump	0.15	140	0.021
Waste surge pump	0.15	140	0.021
Equipment drain sump pump	0.15	160	0.024
Chemical waste pump	0.15	160	0.024
Emergency floor drain sump pump	0.15	160	0.024
Waste sludge discharge mixing pump	0.15	200	0.030
Spent resin pump	0.15	200	0.030
Radwaste control room	0.15	200	0.030
Demineralizer precoat tank	0.15	100	0.015
Precoat pump	0.15	140	0.021
Resin tank	0.15	100	0.015
Waste precoat pump	0.15	160	0.024
Waste filter aid pump	0.15	160	0.024
Filter aid tank	0.15	100	0.015
Health physics lab.	0.15	-	-
Solid waste baler	0.15	200	0.030
Drum rolling machine	0.15	200	0.030
Miscellaneous tanks	0.15	100	0.015
Switchgear room	0.15	300	0.045
Air conditioning equipment	0.15	300	0.045
Ventilation equipment	0.15	200	0.030
Miscellaneous	0.15	1500	0.225
Miscellaneous	0.3	100	0.030
Miscellaneous	0.5	100	0.050
Miscellaneous	1.0	100	0.100

TABLE 12.1-27 CALCULATED MAINTENANCE PERSONNEL EXPOSURE IN RADWASTE BUILDING

Equipment	Expected Dose Rate (mrem/hr)	Time (hr/year)	Exposure (man-rem/year)
Valve-operating tunnel	2.0	400	0.800
Floor drain collector tank	2.0[a]	40	0.080
Waste collector tank	2.0[a]	60	0.120
North and south waste sample tanks	2.0[a]	40	0.080
Floor drain sample tank	2.0[a]	60	0.120
Waste surge tank	2.0[a]	40	0.080
Cond. phase separators	2.0[a]	200	0.400
Chem. waste tank	2.0[a]	100	0.200
Waste sludge tank	2.0[a]	100	0.200
Cond. phase decanting pumps	2.0[a]	200	0.400
Cond. phase sludge disc.mix. pump	2.0[a]	200	0.400
Fuel pool filter-demineralizer	2.0[a]	100	0.200
Waste demineralizer	2.0[a]	100	0.200
Waste collector filter	2.0[a]	100	0.200
Floor drain filter	2.0[a]	100	0.200
Waste hoppers	2.0[a]	100	0.200
Evaporators	2.0[a]	200	0.400
Floor drain demineralizer	2.0[a]	100	0.200
Centrifuge	2.0[a]	200	0.400
Miscellaneous	2.0[a]	400	0.800
Drum mixing and filling	5.0[a]	300	1.500
Drum capping	5.0[a]	300	1.500
Miscellaneous	5.0	40	0.200
Miscellaneous	9.0	60	0.540
Drum storage	47.0	200	9.400
		Total[b]	19.840

[a] Assumes reactor is operating, but the equipment is isolated.

[b] Total is based on 9840 man-hours available. Total maintenance personnel availability is 40,000 man-hours.

TABLE 12.1-28 CALCULATED MAINTENANCE PERSONNEL EXPOSURE IN TURBINE BUILDING

Equipment	Expected Dose Rate (mrem/hr)	Time (hr/year)	Exposure (man-rem/year)
Instrument and controls	0.15	240	0.036
Generator CO_2 unit	0.15	80	0.012
Station air compressors	0.15	560	0.084
Heater feed pumps	0.15	240	0.036
Demineralizer controls	0.15	160	0.024
Demineralizer pumps and valves	0.15	400	0.060
MTG lubrication system	0.15	160	0.024
Hatch area above demineralizer tanks	0.15	160	0.024
Stator cooling equipment	0.50	80	0.040
H_2 seal oil equipment	0.15	160	0.024
Heater shell pull space	0.15	400	0.060
TBCCW heat exchangers and pumps	0.15	160	0.024
TBCCW expansion tanks	0.15	80	0.012
Ventilation equipment	0.15	400	0.060
Demineralizer precoat and resin tanks	0.15	80	0.012
Demineralizer precoat pumps	0.15	80	0.012
Offgas refrigeration units	0.15	80	0.012
Miscellaneous	0.15	800	0.120
Offgas holdup pipe	5.0[a]	20	0.100
Condensate pumps	5.0[a]	20	0.100
Circulating water isolation valves	1.0[a]	40	0.040
Reheater seal tank	2.0[a]	4	0.008
Main turbine generator	1.0[a]	360	0.360
Reheater separators	1.0[a]	20	0.020
Reheat-intercept and stop valves - unitized actuators	0.5[a]	16	0.008
RFP and turbine	0.5[a]	40	0.020
Drain coolers	0.5[a]	20	0.010
Feedwater heaters (3, 4, 5, 6)	0.5[a]	40	0.020
Gland steam condenser	0.5[a]	20	0.010
Miscellaneous	0.3[a]	160	0.048
Sump pumps	0.5	320	0.160
Reactor feed pump turbine lubrication system	0.5	80	0.040

TABLE 12.1-28 CALCULATED MAINTENANCE PERSONNEL EXPOSURE IN TURBINE BUILDING

Equipment	Expected Dose Rate (mrem/hr)	Time (hr/year)	Exposure (man-rem/year)
MTG Lube oil coolers	0.5	40	0.020
Miscellaneous	0.5	200	0.100
Main generator and excitation equipment	0.5	40	0.020
Miscellaneous	1.0	40	0.040
Condensate seal return tank	2.0[a]	40	0.080
Reactor feed pumps and turbine	2.0[b]	280	0.560
Drains coolers	2.0[b]	80	0.160
Filter demineralizer tanks	2.0[b]	160	0.320
Mechanical vacuum pumps	2.0[b]	80	0.160
Steam-jet air ejectors	2.0[b]	160	0.320
Feedwater heaters (3, 4, 5, 6)	2.0[b]	280	0.560
Offgas system (chillers, after-coolers, condensers, precoolers, collector tank and miscellaneous pumps)	2.0[b]	480	0.960
Miscellaneous	2.0	240	0.480
MTG unitized actuators -stop and throttle valves	5.0	40	0.200
Miscellaneous	5.0	40	0.200
Heater drain pumps	2.0[b]	160	0.320
Heater drains flash tanks	2.0[b]	40	0.080
Condenser water box	38.0[c]	20	0.760
Offgas charcoal and filter rooms	38.0[c]	80	3.040
Miscellaneous	38.0[c]	20	0.760
		Total[d]	10.76

[a] Assumes reactor is shut down.

[b] Assumes reactor is operating, but that equipment is isolated.

[c] It is estimated that over a year, 10 percent of personnel time (in a given cell) will be a field of 110 mrem/hr, 50 percent in a field of 50 mrem/hr, and 40 percent in a field of 5 mrem/hr.

[d] Total is based on 8000 man-hours available. Total of man-hours available for maintenance personnel is 40,000 man-hours.

TABLE 12.1-29 SUMMARY OF CALCULATED FERMI 2 EXPOSURE DATA

Personnel Category	Personnel (number)	Exposure (man-rem/year)
Operations	32	36.1
Maintenance (mechanical, electrical, and instrumentation and control)	20	43.7
Radiation Protection (including supervision)	11	19.0
Equipment division	14	5.2
Administration	13	2.6
	Total	106.6

TABLE 12.1-30 COMPARISON OF ESTIMATED FERMI 2 EXPOSURE AND OPERATING FACILITY EXPOSURES

Personnel Category	Fermi 2	Nine Mile Point (average 1970-73)	Quad Cities (1973)	Oyster Creek (average 1970-1973)
Operations[a]	43[b]	23[c]	14[c]	19.6[c]
Maintenance[a]	57[d,e]	77[c]	86[c]	80.4[c]
Total, man-rem/yr[f]	106.6	180.8	142	292

[a] Percent of total exposure.

[b] Includes Operations and Administrative personnel (See Table 12.1-29).

[c] Includes contractors.

[d] Includes Radiation Protection and Equipment Division personnel (See Table 12.1-29).

[e] Maintenance exposure estimates do not include exposures received during repair of unexpected trouble.

[f] Includes only utility personnel.

DETROIT EDISON COMPANY DRAWING NO. 5A721-2232, REV. K

Fermi 2

UPDATED FINAL SAFETY ANALYSIS REPORT

FIGURE 12.1-1, SHEET 1

FERMI 2 RADIATION ZONES
MEZZANINE AND SECOND FLOOR

Security-Related Information - Withheld Under 10 CFR 2.390

DETROIT EDISON COMPANY DRAWING NO. 5A721-2232, REV. K

Fermi 2

UPDATED FINAL SAFETY ANALYSIS REPORT

FIGURE 12.1-1, SHEET 2

FERMI 2 RADIATION ZONES
MEZZANINE AND SECOND FLOOR PLAN

REV 16 10/09

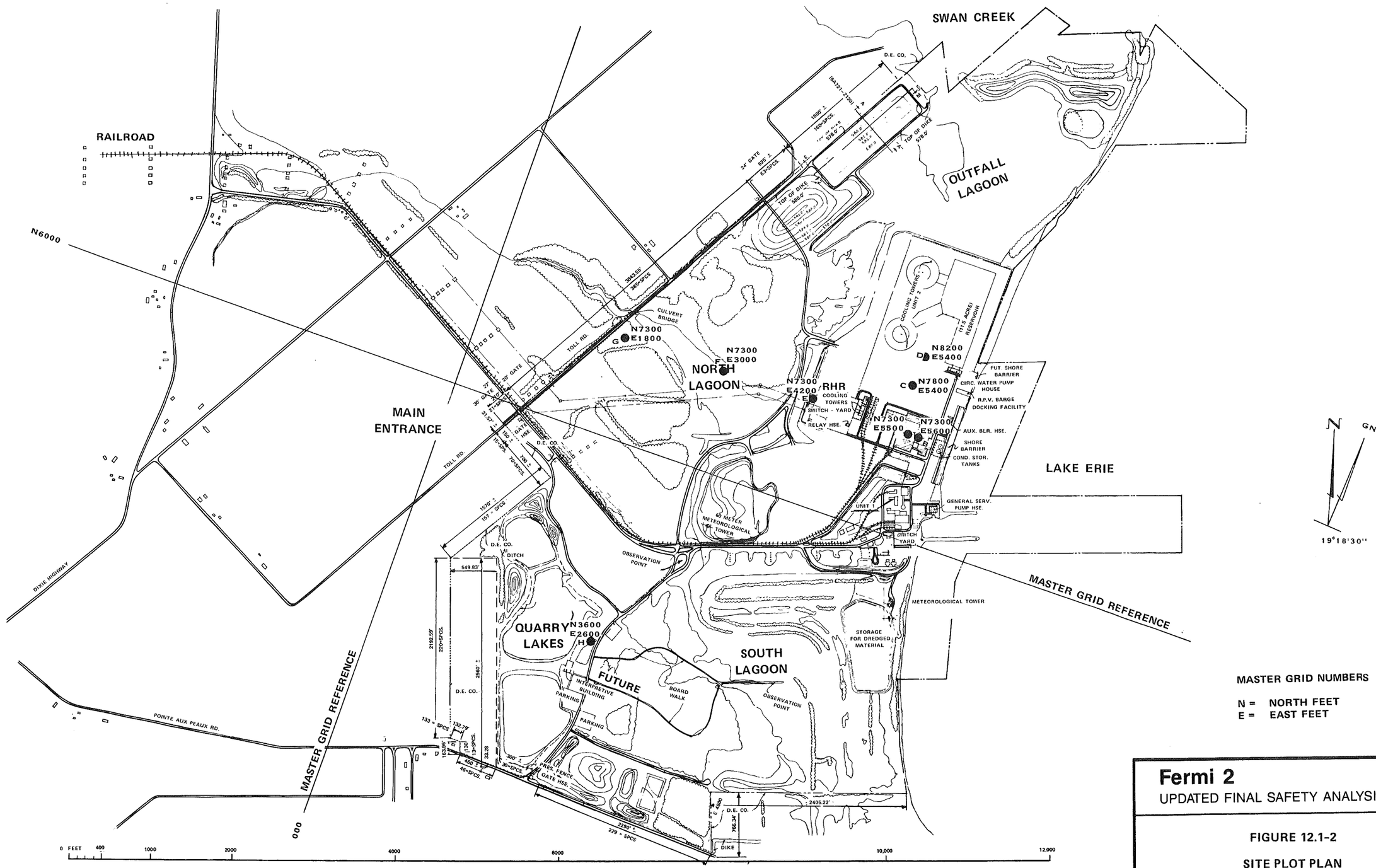

MASTER GRID NUMBERS

N = NORTH FEET
E = EAST FEET

Fermi 2
UPDATED FINAL SAFETY ANALYSIS REPORT

FIGURE 12.1-2

SITE PLOT PLAN
SKYSHINE REFERENCE POINTS

Fermi 2
UPDATED FINAL SAFETY ANALYSIS REPORT

FIGURE 12.1-3, SHEET 1

FERMI 2 RADIATION ZONES – BASEMENT AND SUBBASEMENT FLOOR PLAN

DETROIT EDISON COMPANY DRAWING NO. 5A721-2230, REV. B

DETROIT EDISON COMPANY DRAWING NO. 5A721-2230, REV. C

Fermi 2

UPDATED FINAL SAFETY ANALYSIS REPORT

FIGURE 12.1-03, SHEET 2

FERMI 2 RADIATION ZONES-BASEMENT AND SUBBASEMENT FLOOR PLAN

Security-Related Information - Withheld Under 10 CFR 2.390

Fermi 2
UPDATED FINAL SAFETY ANALYSIS REPORT

FIGURE 12.1-3, SHEET 3

FERMI 2 RADIATION ZONES – BASEMENT AND SUBBASEMENT FLOOR PLAN

DETROIT EDISON COMPANY DRAWING NO. 5A721-2230, REV. B

Security-Related Information - Withheld Under 10 CFR 2.390

Fermi 2

UPDATED FINAL SAFETY ANALYSIS REPORT

FIGURE 12.1-4

FERMI 2 RADIATION ZONES
MEZZANINE AND FIRST FLOOR PLAN

DETROIT EDISON COMPANY DRAWING NO. 5A721-2231, REV. K

DETROIT EDISON COMPANY DRAWING NO. 5A721-2236, REV. C

Fermi 2
UPDATED FINAL SAFETY ANALYSIS REPORT

FIGURE 12.1-5

FERMI 2 RADIATION ZONES
ONSITE STORAGE FACILITY – FLOOR PLANS

Security-Related Information - Withheld Under 10 CFR 2.390

DETROIT EDISON COMPANY DRAWING NO. 5A721-2233, REV. F

Fermi 2

UPDATED FINAL SAFETY ANALYSIS REPORT

FIGURE 12.1-6

FERMI 2 RADIATION ZONES-THIRD FLOOR PLAN

REV 11 05/02

DETROIT EDISON COMPANY DRAWING NO. 5A721-2234, REV. E

Fermi 2

UPDATED FINAL SAFETY ANALYSIS REPORT

FIGURE 12.1-7, SHEET 1

FERMI 2 RADIATION ZONES
FOURTH FLOOR PLAN

Security-Related Information - Withheld Under 10 CFR 2.390

DETROIT EDISON COMPANY DRAWING NO. 5A721-2234, REV. C

Fermi 2

UPDATED FINAL SAFETY ANALYSIS REPORT

FIGURE 12.1-7, SHEET 2

FERMI 2 RADIATION ZONES
FOURTH FLOOR PLAN

DETROIT EDISON COMPANY DRAWING NO. 5A721-2235, REV. C

Fermi 2

UPDATED FINAL SAFETY ANALYSIS REPORT

FIGURE 12.1-8

FERMI 2 RADIATION ZONES – FIFTH BLOOR PLAN

Security-Related Information - Withheld Under 10 CFR 2.390

Fermi 2

UPDATED FINAL SAFETY ANALYSIS REPORT

FIGURE 12.1-9

AUXILIARY BUILDING – SECTIONAL MAIN CONTROL ROOM SHIELDING

DETROIT EDISON COMPANY
DRAWING NO. 5A721-2209, REV. 0

Fermi 2
UPDATED FINAL SAFETY ANALYSIS REPORT

FIGURE 12.1-10

AUXILIARY BUILDING – MAIN CONTROL ROOM SHIELDING ISOMETRIC

DETROIT EDISON COMPANY DRAWING NO. 5A721-2208, REV. O

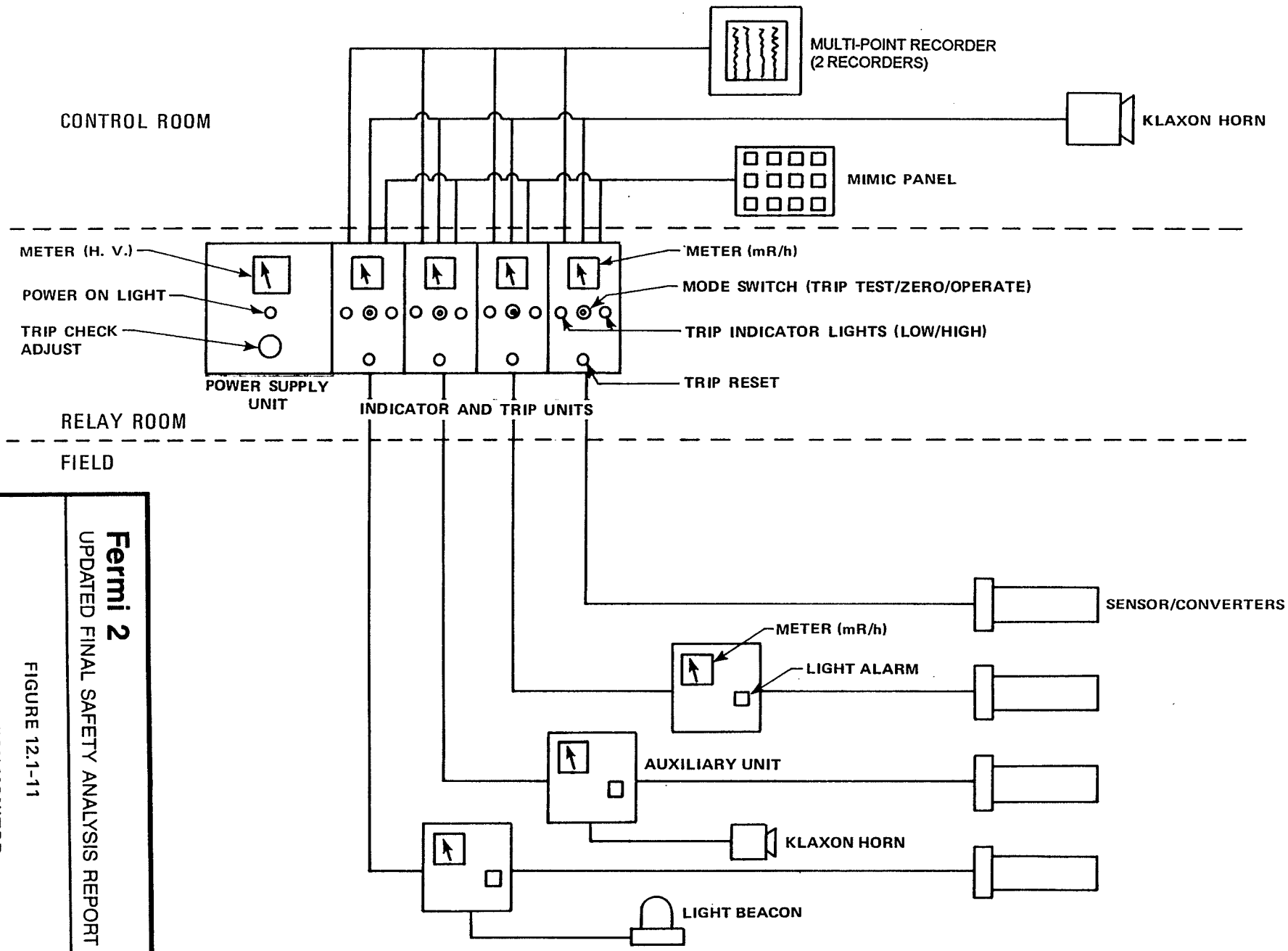

Fermi 2
UPDATED FINAL SAFETY ANALYSIS REPORT

FIGURE 12.1-11
AREA RADIATION MONITOR
FUNCTIONAL DIAGRAM

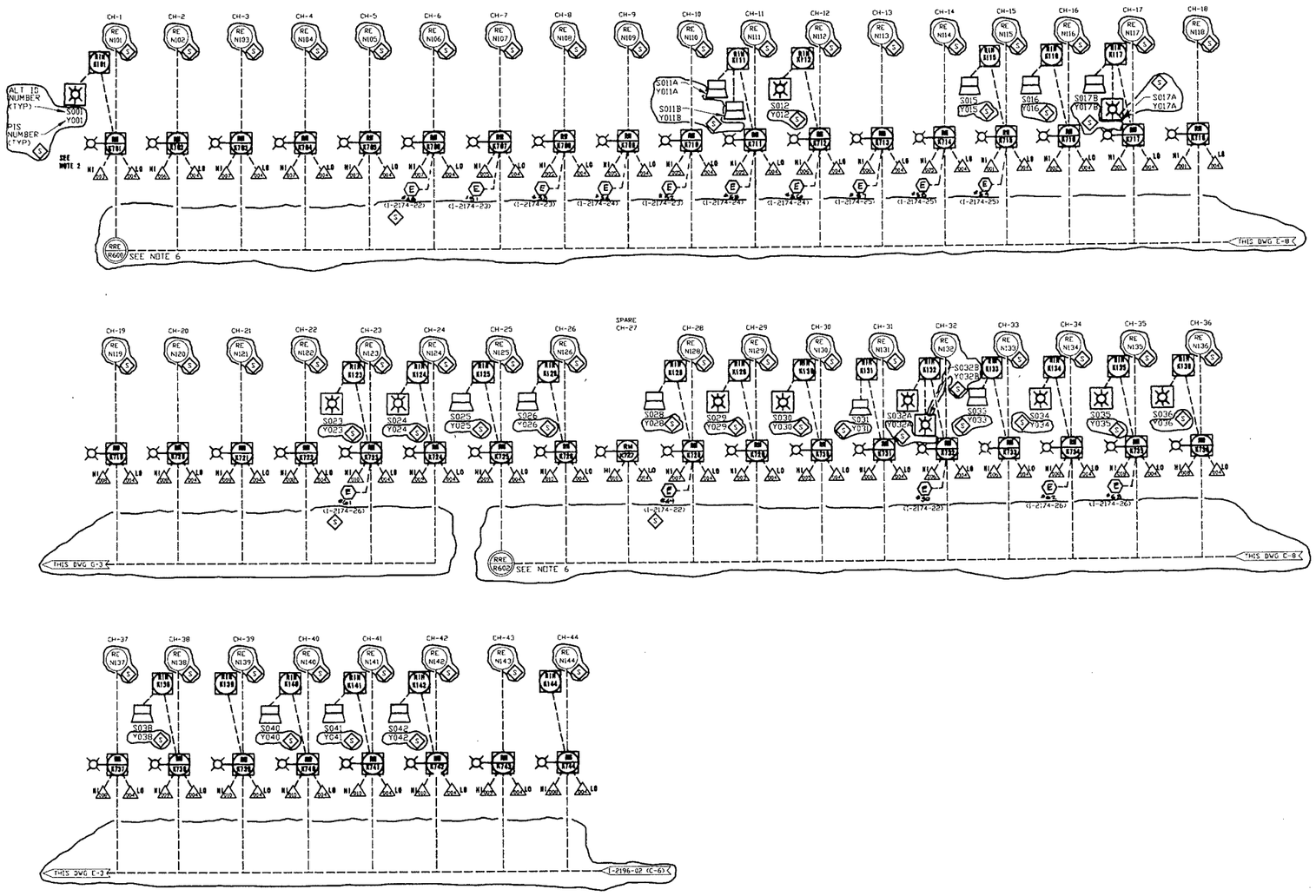

CHANNEL NO	DETECTOR NO	GE FLOOR PLAN REF DWG NO	LOCATION	LOCATION DESCRIPTION	PURPOSE	ANNUNCIATOR CABINET NUMBER	ALARM CLASS	AUDIO LIGHT	VISUAL LIGHT NO	REMARKS
1	N101	I-2862-02	F-10	2ND FLR REAC BLDG PERSONNEL AIRLOCK	PERSONNEL ENTRY	1603	LB	16A109		LB OPPOSITE SIDE OF AIRLOCK
2	N102	I 2861-04	B-9	1ST FLR REAC BLDG EQUIPMENT AIRLOCK	EQUIPMENT ENTRY	1606	N	16B203		
3	N103	I-2872-01	J-13	2ND FLR AUX BLDG ACCESS CONTL	ACCESS CONTROL	1607	N	16A132		
4	N104	I-2862-02	G-11	2ND FLR AUX BLDG CHANGE RM	CLOTHING CHANGE AREA CONTROL	1607	N	16A115		
5	N105	I-2863-03	B-13	3RD FLR REAC BLDG CRD STORAGE	CRD STORAGE & MAINTENANCE	1603	N	16B27		
6	N106	I-2863-01	G-13	3RD FLR AUX BLDG CONTROL ROOM	MAIN CONTROL ROOM	1607	N	16A92		
7	N107	I-2860-02	F-9	SUB BASEMENT REAC BLDG SE CORNER	SE CORNER ROOM	1605	N	16B46		
8	N108	I-2860-02	B-10	SUB BASEMENT REAC BLDG SW CORNER	SW CORNER ROOM	1605	N	16B42		
9	N109	I-2860-02	B-15	SUB BASEMENT REAC BLDG NW CORNER	NW CORNER ROOM	1605	N	16B37		
10	N110	I-2860-02	G-17	SUB BASEMENT REAC BLDG NE CORNER	NE CORNER ROOM	1605	N	16B55		
11	N111	I-2860-02	G-11	SUB BASEMENT REAC BLDG HPCI ROOM	HPCI ROOM MONITOR	1605	LA & RA	16B40		ALARM MUST BE HEARD AT HSDM & ADJACENT
12	N112	I-2861-07	F-11	1ST FLR REAC BLDG CONTROL TIP RM	SOURCE POSITION ACCESS	1606	LB	16B357		
13	N113	I-2861-02	F-16	1ST FLR REAC BLDG CONTROL TIP RM	PERSONNEL AREA SAFETY	1606	N	16B14		
14	N114	I-2860-08	A-11	SUB BASEMENT REAC BLDG DRAIN ROOM	WATER ACTIVITY	1605	N	16B31		
15	N115	I-2865-03	F-15	5TH FLR REAC BLDG SPENT FUEL POOL	WATER ACTIVITY & CRITICALITY	1601	LA	16B193		
16	N116	I-2864-03	E-15	4TH FLR REAC BLDG NEW FUEL VAULT	CRITICALITY & GENERAL PERSONNEL SAFETY	1602	RA	16B199	LOCATED UNDER FUEL VAULT	
17	N117	I-2865-04	F-12	5TH FLR REAC BLDG SPENT FUEL LO PWR	CRITICALITY AIRBORNE RADIO-ACTIVITY & SHINE	1601	LA & RB	16B204	LOCATED ON NUTEL FLOOR EAST WALL	
18	N118	I-2865-03	F-13	5TH FLR REAC BLDG SPENT FUEL HI RNG	AIRBORNE RADIOACTIVITY & SHINE	1601	N	16B205	LOCATED ON CRANE PLATFORM	
19	N119	I-2873-04	L-12	1ST FLR TURBINE HOUSE LP VALVES LA	PERSONNEL PROTECTION N. END TURBINE HOUSE	1608	N	16A205		
20	N120	I-2870-07	R-10	BASEMENT TURBINE HOUSE CROSS AISLE	PERSONNEL PROTECTION PIPE TN. NE END TURB HOUSE	1608	N	16A230		
21	N121	I-2872-05	N-7	2ND FLR TURBINE HOUSE STEAM TUNNEL	GENERAL OPERATIONS	1608	N	16A167		
22	N122	I-2871-02	J-4	1ST FLR TURBINE HOUSE DECON AREA	PERSONNEL PROTECTION S. END TURBINE HOUSE	1608	N	16A145		
23	N123	I-2881-03	M-17	1ST FLR RADWASTE BLDG CONTROL ROOM	PERSONNEL PROTECTION	1610	LB	16B3		
24	N124	I-2880-05	N-17	BASEMENT RADWASTE BLDG DRAIN TANK ROOM	PERSONNEL PROTECTION OVER SUMP	1609	LB	16B7		
25	N125	I-2880-02	P-16	BASEMENT RADWASTE BLDG FLOOR DRAIN SUMP	PERSONNEL PROTECTION ENTERING BASEMENT	1609	LA	16B9		
26	N126	I-2881-01	S-14	1ST FLR RADWASTE BAG CONVEYOR RECIP DR AISLE	PERSONNEL PROTECTION	1610	LA	16B21		
27		SPARE								
28	N128	I-2864-02	G-11	4TH FLR AUX BLDG VENT EQUIP RM.	PERSONNEL PROTECTION STAND-BY GAS	1607	LA	16A108		
29	N129	I-2864-12	B-15	4TH FLR REAC BLDG CHANGE ROOM	PERSONNEL PROTECTION	1603	LB	16B201		
30	N130	I-2860-05	H-12	BASEMENT AUX BLDG LOCOM AIRLOCK	ENTRY ALERT	1605	RB	16B35	RB OUTSIDE OF AIRLOCK	
31	N131	I-2861-03	B-12	1ST FLR REAC BLDG DV AIRLOCK LABYRINTH	ENTRY PROTECTION OF PERSONNEL	1606	RA	16B16		
32	N132	I-2861-05	G-13	1ST FLR AUX BLDG NEAR BLOWOUT PNL	OPERATING INFORMATION	1606	LB & RB	16A130	RB OUTSIDE OF AIRLOCK	
33	N133	I-2861-04	C-9	1ST FLR REAC BLDG SOUTH AIR LOCK	ENTRY PROTECTION	1606	LA	16B18		
34	N134	I-2872-06	N-2	2ND FLR TRB HOUSE BETWEEN SECOND WORK	PERSONNEL PROTECTION SOUTH END TURBINE HOUSE	1606	LB	16A155		
35	N135	I-2871-09	R-2	1ST FLR TURBINE HOUSE NEAR WEST S.JAC AREA	GENERAL OPERATION S.JAC	1608	LB	16A161		
36	N136	I-2871-03	K-1	1ST FLR TURBINE HOUSE NEAR WEST S.JAC AREA	PERSONNEL PROTECTION SOUTH END TURBINE HOUSE	1608	LB	16A159		
37	N137	I-2873-06	M-2	1ST FLR TURBINE HOUSE SOUTH END	PERSONNEL PROTECTION SOUTH END TURBINE HOUSE	1608	N	16A159		
38	N138	I-2880-01	T-17	BASEMENT RADWASTE BLDG DEMINER EVAP BUILDING	OPERATOR PROTECTION	1609	LA	16B19		
39	N139	I-2881-03	L-18	1ST FLR RADWASTE BLDG NEW TRB	HP AREA ALERT	1610	L	16B1		
40	N140	I-2881-01	S-19	1ST FLR RADWASTE BLDG UPPER SHIELD DOOR	GENERAL AREA ALERT	1610	LA	16B13		
41	N141	I-2881-01	S-18	1ST FLR RADWASTE BLDG RADWASTE BKP FILTER	PERSONNEL PROTECTION	1610	LA	16B11		
42	N142	I-2881-02	N-16	1ST FLR RADWASTE BLDG FILTER DEMIN AREA	PERSONNEL PROTECTION GENERAL AREA	1610	LA	16B5		
43	N143	I-2881-04	S-17	1ST FLR MEZZ RADWASTE BLDG RI EQUIP HATCH	PERSONNEL PROTECTION	1609	N	16B17		
44	N144	E-2972-03	S-12	1ST FLR OFFICE SERV BLDG MAIN CONTROL POINT	EQUIPMENT ENTRY	1608	L	16B273		

FOR CONTINUATION OF CHART SEE DWG I-2196-02

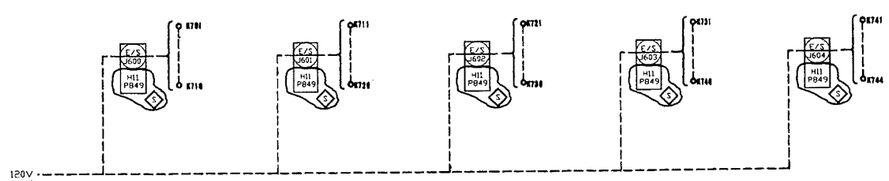

POWER SUPPLY ASSIGNMENT
FOR CABINET H11P849
(FORMER D21P600)

SYMBOLS.

- BIBIC LIGHT
- AUDIBLE ALARM (LOCAL OR REMOTE)
- BEACON LIGHT (LOCAL OR REMOTE)
- ERIS POINT NUMBER
- SEQUENCE OF EVENTS RECORDER POINT

REFERENCE DRAWINGS & DOCUMENTS

I-2193-01 & 02	AREA RADIATION MONITOR CABINET INTERNAL WIRING DIAGRAM H11P849
I-2195-01	AREA RADITION MONITOR ANNUNCIATOR AND MIMIC WIRING SCHEMATIC
I-2193-03 THRU 13	AREA RADITION MONITOR DETECTOR AND AUXILIARY UNIT WIRING DIAGRAM
I-2930-04 THRU 13	ARRANGEMENT OF EQUIPMENT ON H11P816 CABINET
I-2989-50	ANNUNCIATOR SCHEMATIC
I-2191-38 & 39	TERMINATION CABINET H11P877
I-2191-56 & 59	TERMINATION CABINET H11P878
I-2955-17 & 18	RELAY PANEL H11P863
I-2192-01	ARM CABINET H11P849
I-2174-22 THRU 26 & 31	S/D ERIS POINTS
I-2959-04	TYPICAL INSTALLATION DETAILS
I-2975-219	ENGRAVING DWG COMBINATION OPERATING PANEL

NOTES.

1. UNLESS OTHERWISE NOTED
   ALL INSTRUMENT PIS NUMBERS ARE PREFIXED D21
   ALL VALVE & EQUIPMENT PIS NUMBERS ARE PREFIXED D2100
   ALL ALTERNATE IDENTIFICATION NUMBERS ARE PREFIXED D21
2. ALARM STATUS
   L=AUXILIARY UNIT (NO ALARM)
   LA=LOCAL AUDIBLE
   LB=LOCAL BEACON
   N=NO AUXILIARY UNIT
   RB=REMOTE BEACON
   RA=REMOTE AUDIBLE
3. WHENEVER ONE OR MORE ALARMS ARE SHOWN AN AUXILIARY UNIT IS REQUIRED.
4. AN AUXILIARY UNIT REQUIRES 120V AC.
5. FOR RANGE AND SET POINTS OF DETECTORS SEE GECO
6. FOR RECORDER POINTS SEE DWG I-2975-219

Fermi 2

UPDATED FINAL SAFETY ANALYSIS REPORT

FIGURE 12.1-12

AREA RADIATION MONITOR SYSTEM

CHANNEL Nº	DETECTOR Nº	I & C FLOOR PLAN REF. DWG. Nº	LOCATION	LOCATION DESCRIPTION	PURPOSE				ANNUNCIATOR WINDOW NUMBER	ALARM STATUS	MIMIC LIGHT ITEM Nº	REMARKS
45	N145	E-2830-27	C-12	1ST FLR INSIDE DRYWELL	PROTECTION OF PERSONNEL DURING MAINTENANCE				16D6	LA, RA	-	SEE DWG. I-2859-07
46	N446	E-2880-21	S19	1ST FLR ON SITE STRG FACILITY OUTSIDE CTRL RM	PERSONNEL PROTECTION				16D11	LA/LB	16B376	
47	N447	E-2880-21	T19	1ST FLR ON SITE STRG FACILITY COMPACTOR RM	PERSONNEL PROTECTION				16D11	LA	16B376	
48	N448	E-2880-21	V19	1ST FLR ON SITE STRG FACILITY TRUCK BAY	PERSONNEL PROTECTION				16D11	LA	16B377	

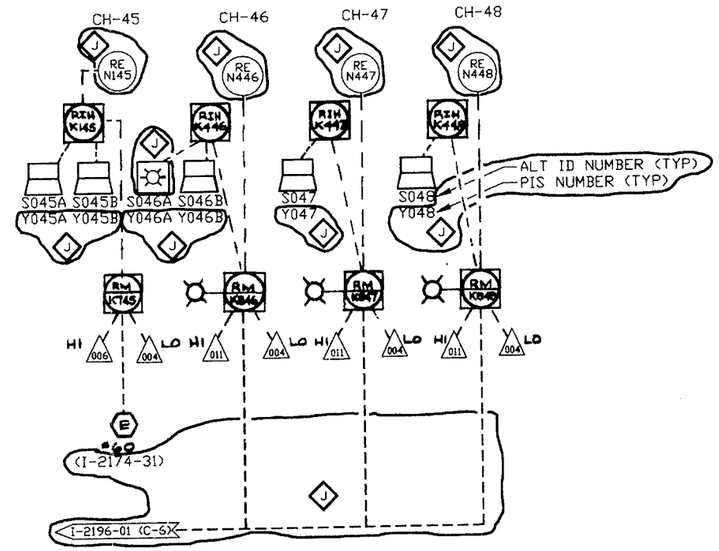

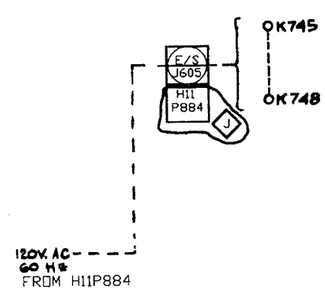

NOTES:

1. FOR GENERAL NOTES, REFERENCE DRAWINGS AND DOCUMENTS, AND SYMBOL LIST, SEE DWG # I-2196-01

Fermi 2
UPDATED FINAL SAFETY ANALYSIS REPORT

FIGURE 12.1-13

AREA RADIATION MONITOR SYSTEM

DETROIT EDISON COMPANY DRAWING NO. 5I721-2196-2, REV. J

12.2 VENTILATION

12.2.1 Design Objectives

The design of the plant ventilation system for radioactive airborne radiation control is based on the following objectives:

a. The system is designed to maintain the airborne radioactivity levels for normal operation, including anticipated operational occurrences, as far below 10 CFR 20 limits as reasonably achievable

b. The system is designed to maintain the airborne radioactivity levels for normal operations, including anticipated operational occurrences, as far below 10 CFR 20 limits as reasonably achievable for areas within the plant structure and on the plant site where construction workers and visitors are permitted

c. The system is designed to ensure that offsite releases during normal operation comply with limits specified in Appendix I of 10 CFR 50 for release to unrestricted areas beyond the site boundary

d. The system is designed to provide a suitable environment for equipment and personnel in the main control room under postaccident conditions, in accordance with General Design Criterion (GDC) 19 of 10 CFR 50, Appendix A.

The plant ventilation systems are designed to provide a suitable environment for personnel and equipment during normal plant operation, including anticipated operational occurrences. In addition to their primary function of preventing extreme thermal environmental conditions for operating personnel and equipment, the plant ventilation systems also provide effective protection against possible uncontrolled release or spread of radioactive airborne contamination. The systems are described in detail in Section 9.4.

The rooms in the plant buildings that are expected to be maintained below minimum contamination guidelines are separated from the potentially contaminated rooms and cubicles by gravity back- draft dampers at ventilation penetrations to ensure that there will be no backflow of the air from potentially contaminated areas to these generally accessible areas. The rooms are arranged so that, where possible, potentially contaminated rooms are not located at contiguous walls between buildings.

Pressure gradients are maintained in plant buildings by the ventilation systems to prevent the release of unmonitored radioactive gases or particulates to the environment and to prevent airborne radioactivity from entering areas normally occupied by plant personnel. In plant buildings where there is a potential for airborne radioactivity, the ventilation system will maintain the building at a slightly negative pressure with respect to the outside atmosphere. The reactor and radwaste buildings will be maintained at a negative pressure of approximately 0.25 in. of water with respect to the outside atmosphere. The turbine building pressure will be maintained at a pressure below outside atmospheric pressure. The control center, radwaste control room, and chemistry laboratory are located in buildings where the potential for airborne radioactivity exists, and these areas are normally maintained at a

slightly positive pressure to prevent the flow of air into these areas resulting from pressure gradients.

Access doors and hatches, which have the capability to be sealed, are provided for most potentially contaminated rooms and cubicles. Most walls, ceilings, and floor penetrations in potentially contaminated rooms and cubicles also are sealed to prevent the uncontrolled flow of air from one area to another. Where the walls, ceilings, and floor penetrations were not sealed, they were evaluated and determined to pose no contamination problem. Flow of air between buildings at common walls is prevented because penetrations at the walls are sealed, and doors are provided at personnel access openings.

The calculated maximum airborne radioactivity levels presented in Subsection 12.2.5 correspond to those that could result from the design-basis reactor coolant inventory loss. The actual expected levels should be considerably smaller, since average coolant inventories and actual equipment leakages will be smaller than those used in the calculations. The estimated maximum airborne radioactivity levels are presented in Tables 12.2-1 through 12.2-13. The methods and assumptions used to calculate these airborne radioactivity levels are presented in Subsection 12.2.3, and a discussion of the resulting inhalation doses is presented in Subsection 12.2.5.

12.2.2 Design Description

The following general guidelines were used in the system design to accomplish the design objectives stated in Subsection 12.2.1:

a. Airflow patterns are maintained for airflow from clean areas to potentially contaminated areas, thus preventing the spread of airborne contamination

b. A negative pressure differential, with respect to surrounding areas, is maintained inside potentially contaminated cubicles by means of control dampers or airflow patterns

c. A slightly positive pressure (1/4 ± 1/8 in. of water in relation to the outside ambient air) is maintained in the main control room under all operating conditions to prevent infiltration of potential contaminants

d. Exhaust from potentially contaminated areas in the radwaste building is routed through high-efficiency particulate air (HEPA) filters to remove airborne radioactivity and reduce onsite and offsite inhalation doses

e. Exhaust from the drywell and suppression chamber or the reactor building in general can be routed through HEPA and charcoal filters in the standby gas treatment system (SGTS) to remove high airborne particulate and iodine radioactivity so that onsite and offsite doses from these sources will be prevented or reduced in the event of high airborne radioactivity that reaches the ventilation system

f. The fresh air supply to the main control room is designed to be operable during all modes of plant operation, including loss of offsite power. The normal air supply is filtered through roll filters, and the emergency air supply is filtered through HEPA and charcoal filters

g. Filters such as the chemistry laboratory fume hood exhaust filters are contained within individual filter housings maintained at a negative pressure by the fume hood exhaust fan. Filter replacement is accomplished by removing a plate on the side of the filter housing. The plate is held in place by wing nuts that are quickly and easily removed. The filter housing is positioned so that the removable panel is accessible. After the panel has been removed, the used filter can be easily removed by pulling the filter into a plastic bag so there will be a minimum spread of radioactivity

h. Portable filter units consisting of a fan and motor assembly, high-efficiency filter, charcoal filter, flexible ducting, and a control panel are provided for use in areas of maintenance and repair activities that may result in the release of airborne radioactivity. The portable filter serves the function of localizing the source and eliminating the spread of contamination by purging the gases from the enclosed maintenance and repair area and then venting them to the normal building ventilation exhaust system after filtering

i. Differential pressure control in the plant buildings is maintained by the building ventilation system to minimize the spread of potential airborne contamination within the plant. The direction of airflow including leakage is controlled by maintaining clean areas at a higher pressure than potentially contaminated areas. A positive pressure is maintained in those areas of the plant normally occupied by operating, maintenance, and administrative personnel under normal or abnormal operating conditions. All other radiologically controlled areas of the plant are maintained at a negative pressure with respect to the outside atmospheric pressure.

The guidelines above are incorporated into the design basis for each individual system. The detailed design of the heating, ventilation, and air conditioning (HVAC) systems is described in Section 9.4. A brief summary of those systems that are expected to handle airborne radioactive material is given in the following subsections.

Ventilation flow diagrams for the reactor/auxiliary building, radwaste building, and turbine house are presented in Figures 9.4-4, Sheets 1 and 2, 9.4-5, and 9.4-7, respectively. Points of air transfer, flow rates on a cubicle-by-cubicle basis, and the location of those process radiation monitors specific to the ventilation system are shown in these flow diagrams. In addition to the process radiation monitors, area radiation monitors that will detect airborne radiation are located in a network throughout the plant. Area radiation monitors are listed in UFSAR Figures 12.1-12 and 12.1-13, including grid location references. The location of the instruments can be determined using these grid references and referring to the radiation zone drawings in Figures 12.1-1 and 12.1-3 through 12.1-8. Details of the process radiation monitors are given in Table 11.4-2 and Figures 11.4-2 through 11.4-4. The gaseous cleanup systems are covered in Section 11.3.

12.2.2.1 Control Center Ventilation System

The control center ventilation system is described in detail in Subsections 9.4.1 and 6.4.2.3.

Basically, two 100 percent-capacity, redundant air conditioning systems having a common ductwork maintain habitability inside the main control room and other areas served by this

system. The other areas include the relay room, cable spreading room, computer room, conference room, main control room office, air-conditioning equipment room, and SGTS rooms. The total volume for these areas is 275,960 ft^3.

Outside air is supplied through a missile-protected inlet located approximately halfway up the south wall of the auxiliary building. The incoming air passes through redundant dampers and joins the recirculated air prior to passing through one of the two redundant air conditioning systems. Each system contains an electronic air cleaner, a roll filter, a 37,000-cfm supply fan, an electrical heater-chiller section, and control dampers. The air is then supplied to the various rooms previously described, and is exhausted from these areas using one of the two 35,550-cfm redundant return fans. A damper on the exhaust is modulated to restrict the airflow to maintain a positive pressure (1/4 ± 1/8 in. of water) in the control center relative to the outside ambient air pressure. The air from the return fans is either completely exhausted or a fraction is exhausted and the remainder returned and mixed with incoming outside air.

The emergency air makeup system can take air from either of two inlet sources, depending on the relative radiation at these inlets (see Subsection 11.4.3.8.2.14). One emergency inlet is located at approximately the same location on the south wall of the auxiliary building as the normal control room air inlet. The second inlet is also missile protected and is located about halfway down the north wall of the auxiliary building.

A maximum flow of 1800 cfm, which is used as makeup air for pressurization, passes through a mist eliminator, an electric heater, a HEPA filter, a charcoal filter, and a second HEPA filter. This flow joins with the 1200-cfm recirculation flow. The total flow of 3000 cfm passes through the recirculation filters consisting of a prefilter, a HEPA filter, a charcoal filter, and a second HEPA filter. The air is discharged by one of the two 3000-cfm redundant emergency recirculation fans into the recirculating airflow prior to entering one of the normal air conditioning systems.

The normal air conditioning system has a motor-driven roll filter with automatically renewable media, whereas the emergency recirculation filter has a fixed prefilter. The HEPA filters used in both emergency filters are fire-retardant fiberglass with a design efficiency of 99.97 percent for 0.3-μm particles at rated capacity using the dioctyl phthalate (DOP) test method. They are installed and tested for bypass leakage such that a decontamination efficiency of 95 percent can be assumed for removal of particulate iodine. The emergency makeup air charcoal adsorber uses 2-in. deep trays of impregnated charcoal assumed to adsorb 95 percent of the elemental and organic iodine from the outside air. The effluent from this filter, which is mixed with recirculated air, is passed through the recirculation charcoal adsorber. This filter is a 4-in.-deep gasketless charcoal adsorber that also is assumed to adsorb 95 percent of the elemental and organic iodine.

Four process radiation monitors (Section 11.4) are located before the makeup filters to determine the airborne activity entering the main control room.

In addition to the protection provided by the systems discussed above, respiratory protection devices, as discussed in Section 12.3, are also available when needed. The ventilation system is designed to limit the whole-body dose to less than 5 rem and the thyroid dose to less than 30 rem for the duration of an accident, in accordance with GDC 19. Evaluation of the system to meet GDC 19 with regard to inhalation dose is presented in Appendix 15A. All portions

of the system required to operate during emergency conditions are designed to Category I requirements.

12.2.2.2 Reactor/Auxiliary Building Ventilation System

The reactor/auxiliary building ventilation system is described in Subsection 9.4.2. The volume of both buildings is 3,500,000 ft^3. Outside air is supplied to the buildings through an inlet located midway down the south side of the auxiliary building. The inlet flow rate is normally 96,060 cfm. The inlet air passes through a filter, a heater, and two of three 50 percent-capacity inlet fans before being supplied to accessible areas of the building. The air is exhausted from areas of higher potential contamination by two of the three 50 percent-capacity exhaust fans. A lower pressure is maintained in potentially contaminated areas than in general access areas, and the entire building is maintained at a lower pressure than the outside ambient air, thus preventing the spread of contamination and exfiltration of unmonitored contaminated air.

The refueling floor area ventilation is sized for a minimum of 7 air changes per hour in the lower 15 ft of the floor area. The airflow is directed across the refueling floor toward the pools and is exhausted through ducts in the dryer-separator pool, fuel storage pool, and the reactor well. This system limits the spread of activity to other parts of the building.

The ventilation system also serves to purge the primary containment to permit personnel access. Sufficient airflow is provided to purge the drywell and suppression chamber at the rate of three air changes per hour. The purge air can be discharged through the normal building exhaust system or, if there is activity, through the SGTS, which is discussed in Subsection 6.2.3.

Radiation monitors are supplied on both major fuel pool area exhaust ducts (Section 11.4) to warn if radioactive gases rise from the fuel pool by sounding an alarm in the main control room. The two pairs of radiation monitors, which are located on the east and west branches of the reactor building exhaust duct, will trip the ventilation fans, isolate the building, close the primary containment isolation valves, and start the SGTS on a high (radiation) alarm. In addition, a radiation monitor is provided in the reactor building exhaust plenum to provide a record of the amount of activity discharged to the environment.

The supply and exhaust isolation valves, which are required to operate during or after a design-basis accident (DBA), are designed to Category I requirements.

12.2.2.3 Radwaste Building Ventilation System

The radwaste building ventilation system is described in Subsection 9.4.3. The volume of the building is 861,000 ft^3. Outside air is supplied to the building through louvers located above the turbine building low roof. The flow rate is approximately 22,567 cfm. The inlet air passes through a prefilter, high efficiency filter, and one of the two 100 percent-capacity (32,800 cfm) supply fans before being supplied to accessible areas of the building. These fans also supply 1650 cfm to the pipe tunnel between the radwaste and turbine buildings. During periods of high ambient outdoor conditions, the supply air is maintained at a temperature of approximately 80°F to ensure safe operating temperatures for the equipment. The air is cooled with a water-cooled refrigerated chilled-water system. The air is supplied

to general access areas and is exhausted from potentially contaminated areas. A lower pressure is maintained in the potentially contaminated areas than in the general access areas, and the entire building is maintained at a lower pressure than the outside ambient air, thus preventing the spread of contamination and the exfiltration of contaminated air.

The exhaust fans take suction from all principal areas and from the vents of radwaste tanks (as listed in Subsection 9.4.3). The air flows through a prefilter, a HEPA filter, and one of the two 100 percent-capacity (approximately 31,818 cfm) exhaust fans, which discharge the air through an exhaust vent above the turbine building high roof.

The HEPA filters, located on the fume hood exhausts and on the main exhaust, have an efficiency of 99.97 percent for 0.3 μm particles at rated capacity according to the DOP test method.

The hood exhaust from the drum-loading station on the turntable is filtered through a HEPA filter, charcoal adsorber, and a HEPA filter before discharge into the radwaste building ventilation exhaust duct. An area radiation monitor measures activity in the vicinity of the charcoal filter to ensure safe access for servicing the filter.

An airborne radioactivity monitor is located on the exhaust to provide a record of the amount of activity discharged to the environment (Section 11.4). On a high alarm, the monitor will trip the building ventilation fans and close the isolation dampers in the radwaste building.

The radwaste building ventilation system is required to operate only during normal plant operation and is therefore not designed to Category I requirements.

The HVAC design provides clean, fresh air in the corridors and normally accessible areas and exhausts the air from potentially contaminated areas such as the extruder/evaporator room, centrifuge room, filter room, evaporator room, and valve rooms. In all instances, airflow is directed to keep the corridors and maintenance areas clean of airborne radioactivity. All HVAC exhaust from potentially contaminated spaces is filtered through a high-efficiency (99.97 percent) filter before discharge to the radwaste building exhaust vent stack.

12.2.2.4 Turbine Building Ventilation System

The turbine building ventilation system is described in Subsection 9.4.4. Outside air enters the building through an intake located on top of the building. The design flow rate was approximately 315,900 cfm (actual flow rates have been measured and were found to be 15% to 20% lower). The inlet air passes through a prefilter, a high-efficiency filter, and two of the three 50 percent-capacity (195,000 cfm) supply fans before being distributed to general access areas.

Air is circulated into potentially contaminated areas by propeller fans. If the air is initially supplied to a potentially contaminated area, it is discharged from that area to the exhaust duct.

A lower pressure is maintained in potentially contaminated areas than in general access areas, and the entire building is maintained at a lower pressure than the outside ambient air, thus preventing the spread of contamination and exfiltration of unmonitored contaminated air.

The air is exhausted by two of the three 50 percent-capacity exhaust fans through an exhaust vent located on the roof.

An airborne radioactivity monitor is located on the exhaust to provide a record of the amount of activity discharged to the environment (Section 11.4). On a high (radiation) alarm, the monitor will trip the ventilation fans.

The turbine building ventilation system is required to operate only during normal plant operation, and is therefore not designed to Category I requirements.

12.2.2.5 Service Building Machine Shop Ventilation System

The volume of the machine shop in the service building is 257,400 ft^3. Outside air enters through two intakes, one for each supply fan, located on top of the warehouse roof. One supply fan has a capacity of 23,000 cfm and the other has a capacity of 6000 cfm. The inlet air passes through low efficiency filters and is discharged into the machine shop by one or both fans, depending upon whether or not the machines are operating. If the machines are in use, air is exhausted from the machines through a roughing filter and through a HEPA filter by a 15,000-cfm exhaust fan before being discharged to the stack located on the machine shop roof. The air from the ultrasonic cleaner fume hood is exhausted through a HEPA filter by a 10,000-cfm exhaust fan before being discharged to the stack.

The general shop area air is exhausted through a HEPA filter by a 7000-cfm exhaust fan before being discharged to the stack. The HEPA filters used on the exhaust have an efficiency of 99.97 percent for 0.3 μm particles at rated capacity.

12.2.3 Source Terms

Potential leakage from the reactor coolant and main steam systems can result in the release of radionuclides to the atmosphere of plant buildings.

The plant ventilation systems are designed such that areas that contain possible sources of leakage are kept at a slightly negative pressure. Clean and tempered air is supplied to general access areas from which it passes to potentially contaminated areas.

To estimate the doses to personnel in the plant structures from reactor coolant and main steam system leakage, the sources as defined in Sections 11.1 and 11.3 are used. These sources, in conjunction with estimates of personnel occupancy time and possible leakage rates, are used to calculate the inhalation doses presented in Subsection 12.2.5.

12.2.4 Airborne Radioactivity Monitoring

12.2.4.1 Design Objectives

The process radiation monitoring system (PRMS), which performs airborne radioactivity monitoring, is designed to measure and record airborne radioactivity levels, to alarm on high airborne radioactivity levels and, when required, to control the release of radioactive gases and particulates produced in the operation of the plant. It also ensures compliance with the requirements of 10 CFR 50; 10 CFR 20; Regulatory Guides 1.21, 8.8, and 8.10; and GDC 64. The system aids in the protection of the general public and plant personnel from exposure to

airborne radioactivity in excess of that allowed by applicable regulations. This system controls or terminates releases exceeding discharge limits and warns plant personnel so that they can take appropriate measures to protect themselves and the general public.

The design objectives of the fixed system for normal operation are

a. To provide continuous surveillance of airborne radioactivity levels in effluent streams that discharge to the environment from minimum detectable levels to levels commensurate with Offsite Dose Calculation Manual radiological effluent control limits. The system indicates and records these levels in the main control room or the radwaste control room and alarms at abnormal levels

b. To provide data for estimating total released activity to comply with Regulatory Guide 1.21

c. To give early warning of increasing radioactivity levels indicative of equipment failure, malfunction, or deteriorating system performance

d. To initiate prompt corrective action, either automatically or through operator response, on high airborne radioactivity level

e. To provide continuous surveillance in the main control room of airborne radioactivity levels by indicating and recording exhaust duct radiation levels and by alarming at abnormal activity levels. This aids in preventing a person from inadvertently entering an area where he can inhale airborne activity in excess of limits defined in 10 CFR 20, Appendix B, Table I, Column 1.

For some anticipated operational occurrences resulting from accidents or operator error, the PRMS will activate necessary isolation or diversion valves to terminate or reduce releases, if the airborne radioactivity levels exceed alarm setpoints (as indicated in Table 11.4-1). Independence of redundant monitors is maintained by providing adequate separation of detectors, signal cabling, power supplies, and actuation circuits for isolation and diversion valves.

The fixed continuous monitors, which are described in Section 11.4, serve in conjunction with a comprehensive air sampling program using portable continuous airborne monitors (CAMs) and air samplers, both short and long term. It is necessary to use a local CAM or air sampler to determine the airborne activity of an enclosure because in many instances a fixed monitor sampling a ventilation duct indicates the activity coming from a group of areas.

12.2.4.2 Continuous Airborne Monitors

The following criteria were used in the design and selection of the equipment.

a. General

1. The filter media used in all monitors and air samplers to collect particulates have an efficiency of at least 98 percent for 0.3 μm particles

2. The iodine adsorbent cartridge, used in monitors and air samplers to sample radioactive iodine, has a collection efficiency of approximately 95 percent for elemental and organic iodine.

b. Fixed continuous airborne monitors - Details are given in Subsection 11.4.3.8

c. Portable continuous airborne monitors

1. The sample flow rate is automatically controlled to within ±1 liter/minute of the set value
2. A flow indicator is provided
3. Power requirements are 115 V ac ±15 percent, 60 Hz ±5 percent from a normal distribution panel
4. Environmental design conditions for the components are 40° to 120°F, 0 to 95 percent relative humidity, and atmospheric pressure
5. Adequate lead shielding approximately 3 in. thick is provided for detectors so that background radiation has a minimum effect on the ability of the monitors to sense low levels
6. The CAM is mounted on a cart on wheels so that it can be moved from one location to another
7. A meter with digital readout or an appropriate strip-chart recorder is provided
8. A low (failure) trip, a high (radiation) trip, and an audible alarm may be provided. The trips are adjustable over the full range of the meter. All alarms are local, but relays are provided if remote alarms or initiation are needed.

12.2.4.3 Air Samplers

The following criteria were used in the selection of portable air samplers.

a. Long-term air samplers

1. The sampler flow rate is controlled between 1 and 4 cfm
2. The filter holder holds a 47-mm or 2-in. filter media to collect particulates and iodine-adsorbent cartridge
3. An elapsed-time meter is installed to determine air sample time; however, this feature is not utilized, the time is recorded manually
4. The samplers are designed to operate at 40° to 140°F, 0 to 95 percent relative humidity, and atmospheric pressure
5. Power requirements are 115 V ac ±10 percent, 60 Hz ±5 percent.

b. Short-term air samplers

1. The sampler flow rate is between 1 and 28 cfm depending on the sampler
2. The air sampler uses a 47-mm or 2-in.-diameter filter media to collect particulates at 2 to 28 cfm. In conjunction with this, an iodine-adsorbent cartridge can be used to collect iodine. A 4-in. sample head and filter may be used to collect particulate samples above 8 cfm
3. Power requirements are 115 V ac ±10 percent, 60 Hz ±5 percent

4. The sampler is small enough to be carried by one man.

12.2.4.4 Air Sample Location Selection

a. Fixed continuous airborne monitors

1. A separate effluent monitor samples the ventilation exhaust from each building that may contain radioactive material (reactor and auxiliary building, radwaste building, and turbine building) before it is discharged to the environment, to determine the level of airborne activity and to terminate the discharge if a preselected setpoint is exceeded
2. Two monitors sample the control center ventilation system to determine the radioactivity level of intake air
3. Four monitors (two pairs) monitor the air exhausted from the fuel pool area to determine the radioactivity level of the air in this area. The pool area is a potential source of high activity because of fuel handling. These monitors provide in-depth protection.

b. Portable continuous airborne monitors

1. A portable CAM may be used to monitor work areas where it is likely there will be high levels of airborne radioactivity because of conditions in the area, equipment being worked on, or the type of work being performed
2. A portable CAM can be used as a replacement for a fixed monitor in the event of a failure.

c. Portable air samplers

1. Long-term air samplers are used to sample at low flow rates (1 to 4 cfm) over extended periods of time (often 24 hr or more). They are usually moved from one location to another in the plant to evaluate the long-term airborne exposures throughout the plant. They can also be used to obtain an average airborne activity level at a job of long duration if a portable CAM is not used
2. Short-term air samplers are used to sample at high flow rates (2 to 40 cfm) over short periods of time to evaluate the air activity in local areas during maintenance jobs or other special operations. Short term air samplers can also be used to evaluate the air activity in enclosed spaces prior to entry for maintenance or other special operations as deemed necessary by Health Physics.

12.2.4.5 Expected Airborne Radioactivity Levels

The expected airborne radioactivity levels in the effluent streams are such that radiation levels at the site boundary are a small fraction of 10 CFR 20 limits and will be as low as reasonably achievable (ALARA).

The expected airborne radioactivity levels in the plant vary depending upon conditions in a given area and the maintenance work or special operations being performed. In clean areas, the expected airborne radioactivity after allowing for decay of radon-thoron daughters is on the order of 10^{-12} to 10^{-13} μCi/cm^3 for gross beta-gamma activity, and 10^{-14} to 10^{-15} μCi/cm^3 for gross alpha activity.

12.2.4.6 Quantity To Be Measured

a. Fixed continuous airborne monitors

The principal nuclides monitored by the fixed monitors are listed in Table 11.4-1. Each channel measures gross radioactivity

b. Portable continuous airborne monitors

Two CAMs measure gross particulate activity, iodine activity, and noble gas activity

c. Portable air samplers

The air samplers collect particulate samples that are normally counted for beta activity. When the gross beta activity is high, alpha activity may be counted to help evaluate radon-thoron activity and an attempt may be made to identify the gamma isotopes present on the filter by using a multichannel pulse height analyzer. During handling and inspection of new fuel, air samples taken in the work area are counted for alpha activity.

Impregnated charcoal or iodine-adsorbent cartridges are used to collect iodine when it is suspected that airborne iodine activity is likely to be present in a work area. These cartridges may be analyzed for radioiodine activity using a multichannel pulse height analyzer or iodine-specific analyzer.

12.2.4.7 Detector Types, Sensitivity, and Range

a. Fixed continuous airborne monitors

The detector types, sensitivity, and nominal range of each fixed monitor are listed in Table 11.4-1. The location of the sample probe and detector for offline monitors was chosen to minimize sample line length and number of direction changes to avoid sample plate-out. Unavoidable bends are made with radii not less than five times the tubing diameter. Probes are isokinetic

b. Portable continuous airborne monitors

The detectors in the portable CAMs are similar to those on the gaseous effluent monitor discussed in Table 11.4-1

c. Air sample counting

Long- and short-term particulate air sampler filter papers are counted using calibrated counting equipment, including Geiger-Mueller detector and rate meter combinations, proportional counters, and a high- resolution gamma spectrometry system. Gamma radionuclide identification can be performed on

an air sample if there is sufficient activity on the sample so that a spectrum can be obtained in a reasonable amount of time. The efficiency of the gamma analyzer varies with the energy of the radionuclide measured. In addition to the efficiency and the background of the counter, the sensitivity of the measurement of air sample activities depends on the length of the sample collection and the counting time.

12.2.4.8 Inservice Inspection, Calibration, and Maintenance

a. Inspections and tests

The following inspections and tests are performed:

1. Fixed continuous airborne monitors - See Subsection 11.4.5.1
2. Portable continuous airborne monitors - During normal operation, daily checks of system operability are made by observing channel behavior. Each portable CAM is calibrated at least annually using an approved procedure
3. Air samplers - During normal operation, air samplers will be checked and calibrated at least annually using an approved procedure.

b. Calibration

1. Fixed continuous airborne monitors - See Subsection 11.4.5.2
2. Portable continuous airborne monitors - An initial certification of each CAM is performed at the factory. The certification of the sources is traceable to the National Institute of Standards and Tests or commercial standards

   After delivery to the plant, the calibration is rechecked by using calibration sources. Calibration is performed at least annually
3. Portable air samplers - The flow of each air sampler is checked initially with a flowmeter. The flow rate is checked at least annually and after maintenance work that could change the flow rate.

c. Maintenance

The detectors, electronics, recorders, and air samplers are serviced and maintained during the calibration process and as required to ensure reliable operation. Such maintenance includes cleaning, lubrication, and assurance of free movement of the recorder in addition to the replacement or adjustment of any components required during testing or calibration

d. Audits and verifications

Independent audits and verifications of test, calibration, and maintenance records and procedures shall be conducted at least annually.

12.2.5 Estimates of Inhalation Doses

12.2.5.1 Introduction

Low-level concentrations of airborne radionuclides are to be expected in the atmosphere of some plant structures. The inhalation dose received by individuals depends on many factors, a few of which are the following:

a. Period of time spent in the various compartments

b. Fluid leak rates to the compartments

c. Type of fluid leakage (water or steam)

d. Concentration of radionuclides in the leaking fluid

e. Volume of and airflow rate through each compartment

f. Use of respiratory equipment or supplemental air.

The plant ventilation systems, as described in Section 9.4, are designed to minimize operating personnel inhalation doses by supplying clean and tempered air to all areas normally accessible during plant operation. Equipment with radioactive leakage potential is located in compartments that are kept at a slightly negative pressure, so air flows into those compartments where leaking equipment might be a source of airborne activity. These compartments are not normally occupied during plant operation and are subject to Health Physics control, with respiratory protective devices or supplemental air used if necessary to allow entry. Also provided is a drywell purge system with sufficient capacity to reduce the airborne radioactivity levels in the drywell and suppression chamber so that short-term access is provided for minor inspection during reactor hot standby, and long-term access is provided for maintenance and inspection during the refueling shutdown.

The ventilation systems are designed such that clean and tempered air is supplied initially to normally occupied areas. The air flows through these areas into the individual equipment compartments, which are kept at a slightly negative pressure, and thence out of the building. This arrangement prevents any airborne activity present in the compartments from reaching normally occupied areas. Because of the ventilation system design and Health Physics controls, the inhalation dose to operations personnel in areas normally occupied during operation (such as the main control room, corridors, and areas not containing potential sources of airborne activity) will be ALARA as required by Regulatory Guide 8.8. The ventilation systems are designed, in conjunction with the shielding, to keep the whole-body dose ALARA.

Inhalation doses for areas with potential airborne activity have been estimated based on the radionuclide concentrations of Section 11.1, anticipated occupancy times, leakage rates, and appropriate ventilation flow rates. These estimates of the personnel inhalation doses received are presented in Tables 12.2-3 through 12.2-12. The inhalation doses as presented by these tables are well below the guidelines applicable to radiation workers as set forth in Table I of Appendix B to 10 CFR 20.

A survey of available information pertaining to operating BWR plants has shown that in cases where the permissible concentration was reached or exceeded, the condition usually existed for a very limited time and was confined to a limited area. When access for extended periods is necessary to an area where the airborne concentration is greater than MPC, the

leaking equipment will be isolated and the area purged, occupancy time will be limited, or respiratory equipment will be used (Section 12.3) to ensure that personnel exposures to airborne radioactive material are both ALARA and within applicable regulatory limits.

Estimates of both maximum airborne concentrations and annual inhalation doses to plant personnel within the reactor building and turbine building are summarized in Tables 12.2-3 through 12.2-12. These are the buildings where the potential for significant inhalation doses would be expected to occur. The liquid in the radwaste building is essentially degassed liquid at atmospheric pressure. Equipment used in the radwaste building is designed to reduce the possibility of equipment leakage by the use of welded piping. The auxiliary building contains no normal sources for inhalation doses.

The most significant potential for inhalation doses in the reactor building is from liquid leakage from the reactor water cleanup (RWCU) system and from entry to the drywell. The drywell may be entered for short periods of time during reactor hot standby and will be opened for extensive maintenance and inspection activities during refueling outages. The reactor/auxiliary building ventilation system is sized to reduce the airborne activity levels in the normally occupied areas to a safe level that affords normal, continuous occupancy. The RWCU system components are enclosed in compartments that are kept at a slightly negative pressure to preclude the leakage of airborne radioactivity to the accessible areas of the building.

The most significant potential for inhalation doses in the turbine building is from liquid leakage from equipment containing condensate and reactor feedwater and from entry to the third floor turbine enclosure area. Leakage to the equipment compartments is primarily liquid, and leakage into the turbine enclosure is primarily steam. The heater feed pumps area is representative of low airborne concentrations where plant personnel may be expected to spend greater lengths of time than in the area of high airborne concentrations.

The turbine building ventilation system is sized to reduce the airborne levels in the normally occupied areas to a safe level that affords normal, continuous occupancy. Pieces of equipment that have the potential to become significant sources of airborne radionuclide concentrations are located in compartments, which are kept at a slightly negative pressure to preclude leakage to the accessible areas of the building. Periodic entrances to the turbine enclosure during normal operation could result in an inhalation dose to the person in the enclosure from steam leakage.

The calculated maximum airborne concentrations and annual inhalation doses presented by Tables 12.2-4 through 12.2-12 are based on the following assumptions:

a. An individual is exposed (without respiratory protection) for the maximum time estimated for each area, per year. In actual practice, several different people would make entries at different times during the year. Also, the use of respiratory protection would reduce the inhalation exposure to specific individuals to much less than those shown

b. The estimated airborne concentrations are based on the concentration of radionuclides in the reactor water and steam presented in Section 11.1 calculated at 102 percent of 3430 MWt (3499 MWt) and the proposed calculational leakage and partition factors as presented in Section 11.3.

Only the radionuclides that were considered to contribute significantly to personnel inhalation doses from the leakage have been included. Since hot and cold liquid leakage is essentially degassed, only halogens are considered.

Other radionuclides are present in such low concentrations that they should not significantly affect the estimated personnel dose. Steam leakage to the turbine enclosure includes noble gases, ^{16}N, and halogens. Radionuclide concentrations in the steam are those presented by Tables 11.1-2 through 11.1-5.

The estimated air concentrations and inhalation doses have been calculated utilizing conservative assumptions for leakage rates, partition factors, and radionuclide concentrations. These estimated annual inhalation doses are higher than would be anticipated during actual reactor operations because of the conservatism used in the calculations. The summary doses presented in Table 12.2-13 are the maximum doses that one person would receive if he remained in each of the areas for the estimated times. Since no individual would ever be exposed to all the areas, Table 12.2-13 does not represent the actual expected dose to a single specific individual, but would represent the "worst-case" total dose from each of the areas considered.

A plant load factor of 80 percent and appropriate building volumes and ventilation rates have been used in the calculations. For each case it has been assumed that the initial concentration is zero and that the leakage has occurred long enough to reach equilibrium condition in the area; that is, 90 hr. For assumptions of leakage rate, type of leakage, compartment volume ventilation flow rate, and the partition factors from the leakage to the atmosphere, see Tables 12.2-1 and 12.2-2. Operating plant data may be found in References 1 through 4.

NOTE: These inhalation-dose estimates of Section 12.2.5 have been performed as part of the original overall design-basis determination that the plant was well-designed from an ALARA standpoint. These calculations were/are intended to only represent conservative preoperational estimates. It was not intended to update or revise these values in order to correspond to operating plant data or to any revised criteria, assumptions, etc. Operational inhalation doses data is routinely measured in plant airborne areas, and summary dose information is periodically provided to pertinent regulatory agencies.

12.2.5.2 Air Concentration Calculation Methodology

Equation 12.2-1 was used to calculate the air concentration of the radionuclides given in Tables 12.2-3 through 12.2-12.

$$c = \frac{Lc_pPF}{V_{\lambda_s}} M\left(1 - e^{-2\lambda_s t}\right) \quad (12.2\text{-}1)$$

$$\lambda_s = \lambda_d + \lambda_p \quad (12.2\text{-}2)$$

$$\lambda_d = \frac{0.693}{T_{1/2}} \quad (12.2\text{-}3)$$

$$\lambda_p = k\frac{F}{V} \quad (12.2\text{-}4)$$

where

c = concentration of each radionuclide in compartment atmosphere, $\mu Ci/cm^3$

c_p = concentration of each radionuclide in system leakage, $\mu Ci/cm^3$

L = leak rate from system to compartment, g/sec

PF = partition factor for each radionuclide

k = building mixing factor (0.8)

λ_s = total removal constant for each radionuclide, hr^{-1}

λ_d = decay constant for each radionuclide, hr^{-1}

λ_p = purge constant for each radionuclide, hr^{-1}

$T_{1/2}$ = half-life of radionuclide, hr

V = compartment volume, ft^3

F = volumetric airflow rate of compartment, ft^3/hr

t = time, hr

M = constant, sec $ft^3/hr\ cm^3$

The following relationships are used to estimate the doses:

$c/MPC \times 5$ = Whole-body dose, rem/year (12.2-5)

$c/MPC \times 30$ = Thyroid dose, rem/year (12.2-6)

where

c = airborne concentration of each radionuclide, $\mu Ci/cm^3$

MPC = maximum permissible concentration for each radionuclide as given in Table I, Appendix B of 10 CFR 20, $\mu Ci/cm^3$

12.2 VENTILATION

REFERENCES

1. Kahn et al., HEW Radiological Surveillance Studies at a Boiling Water Nuclear Power Reactor, BHF/DER 70-1 US, PHS, March 1970.
2. Gundremmingen, Nuclear Power Plant, Annual Report, AEC-tr-7179, 1969.
3. General Electric BWR/6 Standard Safety Analysis Report (GESSAR) Appendix 12A - Noble Gas and Iodine Activity in the Oyster Creek Ventilation and Off Gas Systems During Operation.
4. General Electric BWR/6 Standard Safety Analysis Report (GESSAR) Appendix 12B - Millstone Nuclear Power Station Ventilation Sampling Program.

TABLE 12.2-1 REACTOR BUILDING INHALATION DOSE PARAMETERS (3499 MWt)

Compartment and Location	Volume V (ft^3)	Ventilation Rate F (cfm)	Leak Rate L (g/sec)	Thermal Condition of Leakage	Partition Factor PF	Purge Constant $^{\lambda}p_1$ (hr)	Occupancy Time	Description of Leakage
Drywell	163,730	8500[a]	5.4	Hot	1.0	2.49	1 hr/year at hot standby excluding refueling and maintenance	Degassed reactor[b] coolant
			21.0	Hot	1.0			Degassed[c] feedwater
Reactor water cleanup pump (Elev. 613 ft 6 in., B-C,11-13)								
(North)	3200	1360	0.62	Hot	0.1	20.4	2 hr/week	Degassed reactor[b] coolant
(South)	4230	1360	0.62	Hot	0.1	15.5	2 hr/week	Degassed reactor[b] coolant
Regenerative and nonregenerative heat exchangers (Elev. 613 ft 6 in., C-E, 14-15)	21,500	1680	0.22	Hot	0.1	3.74	2 hr/week	Degassed reactor[b] coolant
Cleanup phase separator (Elev. 613 ft 6 in., C-E, 16-17)	17,100	395	0.22	Cold	0.001	1.10	2 hr/week	Degassed treated[c] reactor coolant

[a] During purging.

[b] Halogen concentration based on GE values from Table 11.1-2 adjusted to agree with Regulatory Guide 1.42. Regulatory Guide 1.42 gives ^{131}I as 0.5×10^{-2} µCi/g. Thus, Table 11.1-2 values are multiplied by 0.385 to obtain concentrations in the reactor coolant.

[c] Obtained from the degassed reactor coolant multiplied by an internal reactor PF of 0.01 and a polishing PF of 0.1.

TABLE 12.2-2 TURBINE BUILDING INHALATION DOSE PARAMETERS (3499 MWt)

Compartment and Location	Volume V (ft^3)	Ventilation Rate F (cfm)	Leak Rate L (g/sec)	Thermal Condition of Leakage	Partition Factor PF	Purge Constant $^{\lambda}p_1$ (hr)	Occupancy Time	Description of Leakage
Third floor turbine enclosure (Elev. 643 ft 6 in., K-N, 5-10)	703,550	81,870	128.5	N/A	1.0	5.59	0.5 hr/week	Steam at 7 sec[a]
Condenser pump (Elev. 564 ft 0 in., M-N, 4-9)	8062	350	19.4	Cold	0.001	2.08	1 hr/week	Degassed condensate[b]
Offgas system condensate return pump (Elev. 564 ft 0 in., P-R, 2-3)	6118	120	4.85	Cold	0.001	0.94	1 hr/week	Degassed condensate[b]
Gland steam condensate pump (Elev. 564 ft 0 in., N-P, 8-9)	33,120	10,490	4.85	Cold	0.001	15.2	1 hr/week	Degassed condensate[b]
Equipment drains (Elev. 564 ft 0 in., R-S, 8-10)	25,829	2,610	3.22	Cold	0.001	4.83	3 hr/week	Degassed condensate[b]
Heater feed pump (Elev. 583 ft 6 in., N-R, 12-14)	114,912	38,865	8.06	Hot	0.1	16.2	20 hr/week	Degassed condensate[b]

[a] Noble gas concentrations based on Table 11.1-2 (t = 7 sec) values adjusted to a 1000 lb/hr release rate. Halogens are based on Regulatory Guide 1.42 values for ^{131}I at 1700 lb/hr and ratioed for the 1000 lb/hr leak rate.

[b] Degassed reactor coolant concentrations based on GE values from Table 11.1-3 adjusted to agree with Regulatory Guide 1.42. Regulatory Guide 1.42 gives ^{131}I as 0.5×10^{-2} µCi/g. Thus, Table 11.1-3 values are multiplied by 0.385 to obtain concentration in the reactor coolant. The degassed reactor coolant concentrations are then reduced by a reactor internal PF of 0.01 and a condensate polishing PF of 0.1 to obtain the degassed condensate concentrations

TABLE 12.2-3 DRYWELL DOSES (3499 MWt)

Nuclide	Concentration in the Fluid[b] c_p (µCi/g)	Airborne Concentration[a] c (µCi/cm^3)	Expected Annual Thyroid and Whole Body Doses[a] Whole Body c/MPC[c]	Whole Body Dose rem/yr	Thyroid c/MPC[c]	Thyroid Dose rem/yr
I. Reactor coolant leakage						
Br-83	5.89E-03	8.73E-09	4.36E-06	2.18E-05		
Br-84	1.06E-02	1.15E-08	5.77E-06	2.89E-05		
Br-85	6.67E-03	1.06E-08	5.30E-06	2.65E-05		
I-131	5.10E-03	8.44E-09	1.41E-05	7.04E-05	4.69E-04	1.41E-02
I-132	5.75E-02	8.49E-08	4.71E-05	2.36E-04	2.12E-04	6.36E-03
I-133	4.27E-02	6.98E-08	1.74E-04	8.72E-04	1.16E-03	3.49E-02
I-134	1.15E-01	1.45E-07	2.41E-05	1.20E-04	1.45E-04	4.34E-03
I-135	6.24E-02	9.95E-08	1.24E-04	6.22E-04	4.98E-04	1.49E-02
TOTAL			4.00E-04	2.00E-03	2.49E-03	7.46E-02
II. Feedwater leakage						
Br-83	5.89E-06	3.52E-11	1.76E-08	8.79E-08	0.00E+00	0.00E+00
Br-84	1.06E-05	4.62E-11	2.31E-08	1.15E-07	0.00E+00	0.00E+00
Br-85	6.67E-06	4.26E-11	2.13E-08	1.07E-07	0.00E+00	0.00E+00
I-131	5.11E-06	3.40E-11	5.67E-08	2.83E-07	1.89E-06	5.67E-05
I-132	4.71E-05	2.79E-10	1.55E-07	7.74E-07	6.97E-07	2.09E-05
I-133	3.50E-05	2.29E-10	5.72E-07	2.86E-06	3.81E-06	1.14E-04
I-134	9.42E-05	4.72E-10	7.87E-08	3.93E-07	4.72E-07	1.42E-05
I-135	5.11E-05	3.28E-10	4.10E-07	2.05E-06	1.64E-06	4.91E-05
TOTAL			1.33E-06	6.67E-06	8.51E-06	2.55E-04

Summary of reactor coolant and feedwater drywell doses:

Σ c/MPC (whole body) = 4.01E-04
Σ c/MPC (thyroid) = 2.50E-03
Σ Whole-body dose = 4.01E-04 x 5 = 2.01E-03 rem/year
Σ Thyroid dose = 2.50E-03 x 30 = 7.50E-02 rem/year

[a] Scale-up factor 1.04

[b] Scale-up factor 1.02

[c] As defined in Appendix B of 10 CFR 20.

TABLE 12.2-4 REACTOR WATER CLEANUP PUMP AREA DOSES (3499 MWt)

			Expected Annual Thyroid and Whole Body Doses[a]			
			Whole Body		Thyroid	
Nuclide	Concentration in the Fluid[b] c_p (µCi/g)	Airborne Concentration[a] c (µCi/cm^3)	c/MPC[c]	Dose rem/yr	c/MPC[c]	Dose rem/yr
I. Reactor coolant leakage						
Br-83	5.89E-03	6.99E-10	3.49E-05	1.75E-04		
Br-84	1.06E-02	1.20E-09	5.98E-05	2.99E-04		
Br-85	6.69E-03	7.99E-10	3.99E-05	2.00E-04		
I-131	5.12E-03	6.14E-10	1.02E-04	5.11E-04	3.41E-03	1.02E-01
I-132	4.71E-02	5.58E-09	3.10E-04	1.55E-03	1.40E-03	4.19E-02
I-133	3.50E-02	4.19E-09	1.05E-03	5.24E-03	6.99E-03	2.10E-01
I-134	9.44E-02	1.09E-08	1.82E-04	9.10E-04	1.09E-03	3.28E-02
I-135	5.11E-02	6.12E-09	7.64E-04	3.82E-03	3.06E-03	9.17E-02
TOTAL			2.54E-03	1.27E-02	1.59E-02	4.78E-01
II. Feedwater leakage						
Br-83	5.89E-03	6.91E-10	3.45E-05	1.73E-04		
Br-84	1.06E-02	1.16E-09	5.82E-05	2.91E-04		
Br-85	6.69E-03	7.95E-10	3.97E-05	1.99E-04		
I-131	5.12E-03	6.12E-10	1.02E-04	5.10E-04	3.40E-03	1.02E-01
I-132	4.71E-02	5.53E-09	3.07E-04	1.54E-03	1.38E-03	4.15E-02
I-133	3.50E-02	4.17E-09	1.04E-03	5.21E-03	6.95E-03	2.09E-01
I-134	9.44E-02	1.07E-08	1.79E-04	8.93E-04	1.07E-03	3.21E-02
I-135	5.11E-02	6.07E-09	7.59E-04	3.80E-03	3.04E-03	9.11E-02
TOTAL			2.52E-03	1.26E-02	1.58E-02	4.75E-01

Summary of north and south reactor cleanup pump doses:

Σ c/MPC$_i$ (whole body) = 5.06E-03
Σ c/MPC$_i$ (thyroid) = 3.17E-02
Σ Whole-body dose = 5.06E-03 x 5 = 2.53E-02 rem/year
Σ Thyroid dose = 3.17E-02 x 30 = 9.51E-01 rem/year

[a] Scale-up factor = 1.04

[b] Scale-up factor = 1.02

[c] As defined in Appendix B of 10 CFR 20.

TABLE 12.2-5 REGENERATIVE AND NONREGENERATIVE HEAT EXCHANGER AREA DOSES (3499 MWt)

			Expected Annual Thyroid and Whole Body Doses[a]			
			Whole Body		Thyroid	
Nuclide	Concentration in the Fluid[b] c_p (μCi/g)	Airborne Concentration[a] c (μCi/cm^3)	c/MPC[c]	Dose rem/yr	c/MPC[c]	Dose rem/yr
Br-83	5.89E-03	1.92E-10	9.62E-06	4.81E-05		
Br-84	1.06E-02	2.77E-10	1.38E-05	6.92E-05		
Br-85	6.68E-03	2.29E-10	1.14E-05	5.72E-05		
I-131	5.10E-03	1.79E-10	2.98E-05	1.49E-04	9.94E-04	2.98E-02
I-132	4.73E-02	1.54E-09	8.55E-05	4.28E-04	3.85E-04	1.15E-02
I-133	3.50E-02	1.22E-09	3.04E-04	1.52E-03	2.03E-03	6.08E-02
I-134	9.42E-02	2.72E-09	4.54E-05	2.27E-04	2.72E-04	8.17E-03
I-135	5.10E-02	1.75E-09	2.18E-04	1.09E-03	8.74E-04	2.62E-02
TOTAL			7.18E-04	3.59E-03	4.55E-03	1.37E-01

[a] Scale-up factor = 1.04

[b] Scale-up factor = 1.02

[c] As defined in Appendix B of 10 CFR 20.

TABLE 12.2-6 CLEANUP PHASE SEPARATOR AREA DOSES (3499 MWt)

			Expected Annual Thyroid and Whole Body Doses[a]			
			Whole Body		Thyroid	
Nuclide	Concentration in the Fluid[b] c_p (µCi/g)	Airborne Concentration[a] c (µCi/cm^3)	c/MPC[c]	Dose rem/yr	c/MPC[c]	Dose rem/yr
Br-83	5.89E-03	7.00E-12	3.50E-07	1.75E-06		
Br-84	1.06E-02	7.28E-12	3.64E-07	1.82E-06		
Br-85	6.57E-03	9.20E-12	4.60E-07	2.30E-06		
I-131	5.10E-03	7.66E-12	1.28E-06	6.39E-06	4.26E-05	1.28E-03
I-132	4.73E-02	5.58E-11	3.10E-06	1.55E-05	1.40E-05	4.19E-04
I-133	3.50E-02	5.12E-11	1.28E-05	6.40E-05	8.53E-05	2.56E-03
I-134	9.42E-02	8.18E-11	1.36E-06	6.82E-06	8.18E-06	2.46E-04
I-135	5.10E-02	7.02E-11	8.77E-06	4.39E-05	3.51E-05	1.05E-03
TOTAL			2.85E-05	1.42E-04	1.85E-04	5.55E-03

[a] Scale-up factor = 1.04

[b] Scale-up factor = 1.02

[c] As defined in Appendix B of 10 CFR 20.

TABLE 12.2-7 TURBINE ENCLOSURE DOSES (3499 MWt)

			Expected Annual Thyroid and Whole Body Doses[a]			
			Whole Body		Thyroid	
Nuclide	Concentration in the Fluid[b] c_p (μCi/g)	Airborne Concentration[a] c (μCi/cm^3)	(c/MPC)[c]	Dose rem/yr	(c/MPC)[c]	Dose rem/yr
Kr-83m	1.87E-03	7.20E-09	9.00E-05	4.50E-04		
Kr-85m	3.34E-03	1.33E-08	2.77E-05	1.39E-04		
Kr-85	1.09E-05	4.50E-11	5.63E-08	2.81E-07		
Kr-87	1.09E-02	4.10E-08	5.12E-04	2.56E-03		
Kr-88	1.09E-02	4.31E-08	5.38E-04	2.69E-03		
Kr-89	6.96E-02	8.59E-08	1.07E-03	5.37E-03		
Kr-90	1.32E-01	3.56E-08	4.45E-04	2.22E-03		
Kr-91	1.03E-01	8.00E-09	1.00E-04	5.00E-04		
Kr-92	1.28E-02	1.75E-10	2.18E-06	1.09E-05		
Kr-93	1.25E-03	1.50E-11	1.87E-07	9.36E-07		
Kr-94	9.87E+05	9.13E-13	1.14E-08	5.71E-08		
Kr-95	7.01E-08	3.23E-16	4.04E-12	2.02E-11		
Kr-97	5.97E-08	5.52E-16	6.90E-12	3.45E-11		
Xe-131m	8.18E-06	3.37E-11	2.11E-08	1.05E-07		
Xe-133m	1.58E-04	6.52E-10	8.15E-07	4.08E-06		
Xe-133	4.49E-03	1.85E-08	2.31E-05	1.16E-04		
Xe-135m	1.42E-02	1.02E-08	1.27E-04	6.34E-04		
Xe-135	8.05E-02	1.12E-07	3.51E-04	1.76E-03		
Xe-137	1.20E-02	4.99E-08	6.24E-04	3.12E-03		
Xe-138	4.84E-01	1.31E-07	1.64E-03	8.19E-03		
Xe-139	1.36E-01	4.60E-08	5.75E-04	2.87E-03		
Xe-140	1.15E-01	1.39E-08	1.74E-04	8.71E-04		
Xe-141	7.50E-04	8.42E-12	1.05E-07	5.27E-07		
Xe-142	7.82E-03	1.24E-10	1.55E-06	7.74E-06		
Xe-143	4.19E-05	3.71E-13	4.64E-09	2.32E-08		
Xe-144	1.79E-04	1.46E-11	1.82E-07	9.10E-07		
N-13	6.57E-03	1.55E-08	1.94E-04	9.69E-04		
N-16	9.31E+01	3.35E-06	4.19E-02	2.09E-01		
N-17	2.10E+02	1.92E-10	2.41E-06	1.20E-05		
O-19	1.13E+04	1.79E-07	2.24E-03	1.12E-02		
Br-83	9.63E-05	2.20E-10	2.76E-06	1.38E-05		
Br-84	1.45E-04	2.83E-10	3.54E-06	1.77E-05		
Br-85	1.12E-05	2.67E-11	3.34E-07	1.67E-06		
I-131	8.66E-05	2.10E-10	8.75E-06	4.38E-05	2.92E-04	8.75E-03
I-132	7.61E-04	1.75E-09	2.43E-05	1.21E-04	1.09E-04	3.28E-03
I-133	5.92E-04	1.42E-09	8.91E-05	4.45E-04	5.94E-04	1.78E-02

TABLE 12.2-7 TURBINE ENCLOSURE DOSES (3499 MWt)

			Expected Annual Thyroid and Whole Body Doses[a]			
			Whole Body		Thyroid	
Nuclide	Concentration in the Fluid[b] c_p (μCi/g)	Airborne Concentration[a] c (μCi/cm^3)	(c/MPC)[c]	Dose rem/yr	(c/MPC)[c]	Dose rem/yr
I-134	1.41E-03	2.97E-09	1.24E-05	6.20E-05	7.44E-05	2.23E-03
I-135	8.58E-04	2.04E-09	6.37E-05	3.18E-04	2.55E-04	7.64E-03
TOTAL			5.08E-02	2.54E-01	1.32E-03	3.97E-02

[a] Scale-up factor = 1.04
[b] Scale-up factor = 1.02
[c] As defined in Appendix B of 10 CFR 20.

TABLE 12.2-8 CONDENSER PUMP AREA DOSES (3499 MWt)

			Expected Annual Thyroid and Whole Body Doses[a]			
			Whole Body		Thyroid	
Nuclide	Concentration in the Fluid[b] c_p (µCi/g)	Airborne Concentration[a] c (µCi/cm^3)	c/MPC[c]	Dose rem/yr	c/MPC[c]	Dose rem/yr
Br-83	5.89E-05	7.55E-12	1.89E-07	9.44E-07		
Br-84	1.06E-04	9.51E-12	2.38E-07	1.19E-06		
Br-85	6.68E-05	9.24E-12	2.31E-07	1.15E-06		
I-131	5.11E-05	7.43E-12	6.19E-07	3.09E-06	2.06E-05	6.19E-04
I-132	4.71E-04	5.99E-11	1.66E-06	8.32E-06	7.49E-06	2.25E-04
I-133	3.50E-04	5.02E-11	6.28E-06	3.14E-05	4.19E-05	1.26E-03
I-134	9.43E-04	9.94E-11	8.29E-07	4.14E-06	4.97E-06	1.49E-04
I-135	5.11E-04	7.09E-11	4.43E-06	2.22E-05	1.77E-05	5.32E-04
TOTAL			1.45E-05	7.24E-05	9.27E-05	2.78E-03

[a] Scale-up factor = 1.04

[b] Scale-up factor = 1.02

[c] As defined in Appendix B of 10 CFR 20.

TABLE 12.2-9 OFFGAS SYSTEM CONDENSATE RETURN PUMP AREA DOSES (3499 MWt)

			Expected Annual Thyroid and Whole Body Doses[a]			
			Whole Body		Thyroid	
Nuclide	Concentration in the Fluid[b] c_p (μCi/g)	Airborne Concentration[a] c (μCi/cm^3)	c/MPC[c]	Dose rem/yr	c/MPC[c]	Dose rem/yr
Br-83	5.89E-05	5.04E-12	1.26E-07	6.31E-07		
Br-84	1.06E-04	4.69E-12	1.17E-07	5.86E-07		
Br-85	6.68E-05	6.38E-12	1.59E-07	7.97E-07		
I-131	5.11E-05	5.40E-12	4.50E-07	2.25E-06	1.50E-05	4.50E-04
I-132	4.71E-04	3.76E-11	1.05E-06	5.23E-06	4.71E-06	1.41E-04
I-133	3.50E-04	3.59E-11	4.49E-06	2.24E-05	2.99E-05	8.97E-04
I-134	9.43E-04	5.43E-11	4.52E-07	2.26E-06	2.71E-06	8.14E-05
I-135	5.11E-04	4.88E-11	3.05E-06	1.52E-05	1.22E-05	3.66E-04
TOTAL			9.88E-06	4.94E-05	6.45E-05	1.94E-03

[a] Scale-up factor = 1.04

[b] Scale-up factor = 1.02

[c] As defined in Appendix B of 10 CFR 20.

TABLE 12.2-10 GLAND STEAM CONDENSATE PUMP AREA DOSES (3499 MWt)

			Expected Annual Thyroid and Whole Body Doses[a]			
			Whole Body		Thyroid	
Nuclide	Concentration in the Fluid[b] c_p (µCi/g)	Airborne Concentration[a] c (µCi/cm^3)	c/MPC[c]	Dose rem/yr	c/MPC[c]	Dose rem/yr
Br-83	5.89E-05	7.00E-14	1.75E-09	8.75E-09		
Br-84	1.06E-04	1.19E-14	2.96E-10	1.48E-09		
Br-85	6.68E-05	8.04E-14	2.01E-09	1.00E-08		
I-131	5.11E-05	6.20E-14	5.17E-09	2.58E-08	1.72E-07	5.17E-06
I-132	4.71E-04	5.60E-13	1.55E-08	7.77E-08	6.99E-08	2.10E-06
I-133	3.50E-04	4.19E-13	5.24E-08	2.62E-07	3.49E-07	1.05E-06
I-134	9.43E-04	1.08E-12	9.01E-09	4.51E-08	5.41E-08	1.62E-06
I-135	5.11E-04	6.15E-13	3.84E-08	1.92E-07	1.54E-07	4.61E-06
TOTAL			1.25E-07	6.23E-07	7.99E-07	2.40E-05

[a] Scale-up factor = 1.04

[b] Scale-up factor = 1.02

[c] As defined in Appendix B of 10 CFR 20.

TABLE 12.2-11 EQUIPMENT DRAINS AREA DOSES (3499 MWt)

			Expected Annual Thyroid and Whole Body Doses[a]			
			Whole Body		Thyroid	
Nuclide	Concentration in the Fluid[b] c_p (µCi/g)	Airborne Concentration[a] c (µCi/cm^3)	c/MPC[c]	Dose rem/yr	c/MPC[c]	Dose rem/yr
Br-83	5.89E-05	1.80E-13	1.35E-08	6.75E-08		
Br-84	1.06E-04	2.71E-13	2.04E-08	1.02E-07		
Br-85	6.68E-05	2.13E-13	1.60E-08	8.00E-08		
I-131	5.11E-05	1.65E-13	4.13E-08	2.07E-07	1.38E-06	4.13E-05
I-132	4.71E-04	1.45E-12	1.20E-07	6.02E-07	5.42E-07	1.63E-05
I-133	3.50E-04	1.12E-12	4.21E-07	2.11E-06	2.81E-06	8.42E-05
I-134	9.43E-04	2.64E-12	6.60E-08	3.30E-07	3.96E-07	1.19E-05
I-135	5.11E-04	1.63E-12	3.06E-07	1.53E-06	1.22E-06	3.67E-05
TOTAL			1.01E-06	5.03E-06	6.35E-06	1.90E-04

[a] Scale-up factor = 1.04
[b] Scale-up factor = 1.02
[c] As defined in Appendix B of 10 CFR 20.

TABLE 12.2-12 HEATER FEED PUMP AREA DOSES (3499 MWt)

			Expected Annual Thyroid and Whole Body Doses[a]			
			Whole Body		Thyroid	
Nuclide	Concentration in the Fluid[b] c_p (µCi/g)	Airborne Concentration[a] c (µCi/cm^3)	c/MPC[c]	Dose rem/yr	c/MPC[c]	Dose rem/yr
Br-83	5.89E-06	1.58E-14	1.58E-08	7.90E-08		
Br-84	1.06E-05	2.68E-14	2.68E-08	1.34E-07		
Br-85	6.68E-06	1.82E-14	1.82E-08	9.10E-08		
I-131	5.11E-06	1.39E-14	4.65E-08	2.32E-07	1.55E-06	4.65E-05
I-132	4.71E-05	1.26E-13	1.40E-07	6.99E-07	6.29E-07	1.89E-05
I-133	3.50E-05	9.57E-14	4.78E-07	2.39E-06	3.19E-06	9.57E-05
I-134	9.43E-05	2.97E-13	9.91E-08	4.96E-07	5.96E-07	1.78E-05
I-135	5.11E-05	1.39E-13	3.48E-07	1.74E-06	1.39E-06	4.18E-05
TOTAL			1.17E-06	5.87E-06	7.36E-06	2.21E-04

[a] Scale-up factor = 1.04

[b] Scale-up factor = 1.02

[c] As defined in Appendix B of 10 CFR 20.

TABLE 12.2-13 SUMMARY PLANT INHALATION AND WHOLE-BODY DOSES (3499 MWt)

Area	Whole Body c/MPC[a]	Whole Body Dose rem/yr	Thyroid c/MPC[a]	Thyroid Dose rem/yr
Drywell	4.01E-04	2.01E-03	2.50E-03	7.50E-02
Reactor cleanup pumps	5.06E-03	2.53E-02	3.17E-02	9.51E-01
Regenerative and nonregenerative heat exchangers	7.18E-04	3.59E-03	4.55E-03	1.37E-01
Cleanup phase separator	2.85E-05	1.42E-04	1.85E-04	5.55E-03
Turbine enclosure	5.08E-02	2.54E-01	1.32E-03	3.97E-02
Condenser pumps	1.45E-05	7.24E-05	9.27E-05	2.78E-03
Offgas system condensate return pump	9.88E-06	4.94E-05	6.45E-05	1.94E-03
Gland steam condensate pump	1.25E-07	6.23E-07	7.99E-07	2.40E-05
Equipment drains	1.01E-06	5.03E-06	6.35E-06	1.90E-04
Heater feed pumps	1.17E-06	5.87E-06	7.36E-06	2.21E-04

[a] As defined in Appendix B of 10 CFR 20.

12.3 RADIATION PROTECTION PROGRAM

12.3.1 Program Organization and Objective

12.3.1.1 Program Organization

The Fermi 2 organization, including the Radiation Protection Section, is described in Section 13.1. The Manager - Radiation Protection has the responsibility for the Radiation Protection Program and for ensuring that plant operation meets the radiation protection requirements set forth in 10 CFR 19, 10 CFR 20, 10 CFR 50, applicable Regulatory Guides, and the Technical Specifications and licenses.

12.3.1.2 Program Objective

The objective of the Radiation Protection Program is to provide administrative control of persons on the site to ensure that personnel dose is within the requirements of 10 CFR 20 and that such exposure is kept as low as reasonably achievable (ALARA).

This program consists of rules, practices, and procedures that are used to accomplish the objectives previously stated in a practical and safe manner. The program meets the intent of Regulatory Guides 8.2, 8.8, and 8.10. The Radiation Protection Program is designed to ensure that

a. Operations, maintenance, technical, etc., personnel are provided radiation protection training appropriate for their assigned responsibilities. Contractors and other supporting personnel are provided orientation training to the extent required by the work that they are to perform. This training meets the requirements of 10 CFR 19, 10 CFR 20, and Regulatory Guide 1.8

b. Detailed procedures are prepared and approved to implement the Radiation Protection Program requirements. Major aspects and those that affect general plant personnel are documented in Administrative Procedures in the Plant Conduct Manual

c. Access-control procedures are followed so that access to Radiologically Controlled Areas (RCA) are controlled. Radiation and high radiation areas are segregated and identified in accordance with 10 CFR 20. Control is exercised over each individual entry into high radiation areas

d. All tools and equipment used in the RCAs are surveyed by Radiation Protection personnel before they are removed from the RCA. Normally, tools or equipment moved from one contaminated area to another are wrapped or packaged to prevent the spread of contamination to intermediate areas

e. Appropriate protective clothing is used as required to help prevent personnel contamination and the spreading of contamination from one area to another

f. Airborne radioactivity is measured in accordance with 10 CFR 20 and appropriate engineered controls, and respiratory protective equipment is used as required to keep inhalation of radioactive material ALARA

g. Radiation levels in the plant are measured and posted, so that when personnel enter an area, they can keep their dose ALARA by staying in areas with lower radiation levels

h. Personnel are provided with radiation monitoring equipment to measure their radiation dose (Subsection 12.3.4)

i. A Bioassay Program has been developed using guidance from Regulatory Guides 8.9 and 8.34. This program includes whole body counting and/or a urinalysis sampling program to measure uptakes of radioactive material

j. Records of occupational exposure to radiation are maintained using guidance from Regulatory Guide 8.7. Reports are made to the NRC as required by 10 CFR 20 and to the individual as required by 10 CFR 19

k. Entrance to high radiation areas and maintenance work in radiation or high radiation areas is controlled by using a radiation work permit. This permit typically states dose rates, protective clothing requirements, monitoring requirements, and any special notes or cautions pertinent to the specific job. These permits are prepared by and require approval of Radiation Protection. Jobs involving significant dose to personnel are preplanned and, where conditions require, practice runs on a mockup are made to reduce exposure time on the actual job. Use of special tools and temporary shielding to reduce dose is evaluated on a case basis. On complex or new jobs that involve significant dose, a debriefing session is held after the completion of the job in an attempt to improve methods and keep dose ALARA

l. Periodic radiation, contamination, and airborne activity surveys are performed to determine and document radiological conditions throughout the plant. Radiological status in the plant is posted so that personnel can review the radiological conditions prior to entering an area.

m. Incoming and outgoing shipments that may be radioactive are surveyed to ensure compliance with applicable provisions of 10 CFR and 49 CFR

n. A record of radiological surveys is maintained in accordance with 10 CFR 20

o. Routine work involving radiation exposures is subject to a periodic review by Radiation Protection to identify situations in which dose can be reduced. Selection of items for review will be based upon area radiation and contamination surveys, personnel contamination surveys, personnel observations, and incidents

p. Process radiation, area radiation, portable radiation, and airborne radioactivity monitors are routinely calibrated and maintained in accordance with approved procedures

q. Radiological incidents are investigated and documented in an attempt to prevent their recurrence. Reports of radiological incidents are made to the NRC in accordance with 10 CFR 20.

r. Plant administrative procedures assure adequate control of radioactive material stored outside of the plant Radiologically Controlled Area (RCA). These

controls include: (1) a total limit of 200 Curies for all radioactive material stored outside of the plant RCA, (2) an outdoor activity limit of 10 Curies per package or unpackaged component, (3) containment to prevent runoff of wet material stored longer than 30 days, (4) the use of skids or other means to raise outdoor packages and unpackaged components off of the ground, and (5) packaging in noncombustible containers suitable for shipment. Unpackaged radioactive material may be stored outdoors if it is nondispersable and noncombustible, and if any removable contamination is within transportation limits. In lieu of packaging in a noncombustible container suitable for shipment, packages stored indoors may be in a noncombustible cabinet or device appropriate for the type, form, and quantity of radioactive material stored. In lieu of a non-combustible package cabinet, or device, radioactive material may be stored in an area with approved fire detection and suppression systems. An inventory, survey and tracking system will be used to assure that quantity limits are not exceeded, radiological postings are appropriate, and packaging is in good condition. These controls do not apply to radioactive material in transit, radioactive material exempted from licensing requirements under 10 CFR parts 30, 40, and 70, and radioactive material maintained under the provisions of an outside license.

s. An In-Plant Radiation Monitoring program ensures the capability to accurately determine the airborne iodine concentrations in vital areas under accident conditions. This program includes the following:

1. Training of personnel,
2. Procedures for monitoring, and
3. Provisions for maintenance of sampling and analysis equipment.

12.3.2 Facilities and Equipment

12.3.2.1 Facilities

The Radiation Protection facilities include an access-control checkpoint, low background counting facilities room, instrument calibration room, offices, personnel decontamination area, change areas, and areas for the storage of protective clothing, respiratory equipment, air-sampling equipment, portable radiation instruments, personnel dosimeters, and special shielding.

The main access-control point is located at the entrance to the RCA. The control point consists of personnel monitors and friskers located at the doorway to the service building.

Personnel change areas, disposal/laundry bags, and stepoff pads are available for major work in contaminated areas. Stepoff pads and other supplies are available for other jobs as needed.

A clothing supply is available, and protective equipment and clothing requirements are contained in radiation work permits as applicable.

If contamination is found on the body or work clothing of an individual, clean protective clothing is available for transit to the personnel decontamination area. Personnel-monitoring

friskers are also located at the main access-control point and at various locations throughout the plant.

The personnel decontamination area is equipped with a sink and shower for decontamination. The personnel decontamination area is equipped with a cabinet supplied with common decontamination supplies and chemicals. Decontamination is done under the supervision of Radiation Protection. Areas are also provided for minor medical treatment and first aid of contaminated personnel.

Protective clothing is worn in contaminated areas. These areas are well marked, and stepoff pads are installed at the entrances to prevent inadvertent entry into the areas. The objective of this is to keep exposure to radioactive material as limited as possible. In the event of an incident that contaminates large portions of the plant, personnel can don clothing at an access-control point.

The low background counting facilities contain various radiation-detecting instruments including the following:

a. Low background proportional detector with an automatic sample changer and associated electronics for gross alpha and/or beta measurements

b. Liquid scintillation counter for counting tritium and other beta emitters

c. High resolution gamma spectrometry system to identify and quantify gamma-emitting radionuclides.

The low radiation level chemistry laboratory is divided into four working peninsulas. Each peninsula is equipped with a fume hood; sink; counter with storage drawers; and electrical, air, vacuum, gas, and water service. An exhaust is also supplied for an emission spectrophotometer. Sufficient space is provided so that the laboratory equipment that is used on a routine basis can be left set up. Sample evaporation, and other processes which will release activity, or noxious fumes, are performed inside one of the fume hoods.

Samples may be prepared by evaporation, filtration, ion-exchange chromatography, or chemical separation. A standard source geometry is obtained that can be counted in the counting room or the spectrometer room.

The counting room, which can be entered from the low-level laboratory, contains a sink, fume hood, storage cabinets, and counter space on which to set the various radiation detecting instruments.

A Radiation Protection instrument calibration room is provided. Portable radiation survey instruments and air sampling equipment are normally calibrated in this area. Solid and liquid sources, which may be stored here, are also used to calibrate counting room instruments and plant radiation monitoring systems.

The calibration sources include high- and low-level sources. The high-range calibrator contains a mechanism to expose or shield the source. The room is equipped with an area radiation monitor with the radiation detector located near the high-range calibrator.

Visible warning lights are activated when the high-range calibrator is in use. The sources include high- and low-level gamma sources. The box calibrator contains a mechanism to raise or lower, or move the detector closer or farther to obtain the desired source-to-detector

distance and thus the desired radiation level. Various jigs, designed to hold the portable instruments and dosimeters used at Fermi 2, are used to properly position the detector chamber in the calibrator.

A copy of the instrument calibration and repair record for each portable radiation detecting instrument is kept on file in accordance with Radiation Protection procedures.

The main Radiation Protection offices are located in the office service building. In-use survey records are normally stored in this office area. Permanent record storage is provided by Plant Support.

12.3.2.2 Equipment

12.3.2.2.1 Anticontamination Protective Clothing

Anticontamination clothing is worn in contaminated areas to prevent the contamination of personnel. It is removed at the exit from contaminated areas and placed in containers at the local job site to prevent the spread of contamination to other plant areas.

At the end of the job, or when the container is full, the container is monitored and transported to a storage area for laundry service.

Personnel are trained in the proper donning and removal of anti-contamination clothing as part of their radiation worker training. The selection of clothing for a specific job or area is determined by Radiation Protection on the basis of survey results and type of work. Clothing requirements are specified on the radiation work permit for the area or job.

Appropriate protective clothing is stocked at the plant.

12.3.2.2.2 Respiratory Equipment

Airborne contamination is minimized by keeping floor contamination level low, reducing leaks as much as possible, using local ventilation, and by using enclosures such as glove boxes. However, where airborne contamination levels exceed, or there is a potential for exceeding, values listed in Appendix B of 10 CFR 20, respiratory equipment may be worn to minimize personnel exposure.

The airborne contamination levels will be determined by the use of air samplers. The concentrations measured or expected will be used to select proper respiratory equipment.

A respiratory protection program has been developed which meets the requirements of 10 CFR 20. Personnel who will wear respiratory equipment are trained in the use of the equipment. Typical respiratory equipment used at Fermi 2 includes the following.

a. Air-purifying respirators

b. Supplied-air respirators

c. Self-contained breathing apparatus.

Emergency respiratory equipment for the operators is stored in the main control room.

12.3.2.2.3 Air Sampling Equipment

Air sampling may be performed using continuous air monitors (CAMs) and air samplers, which are described in Sections 11.4 and 12.2.4. The CAMs can be used to measure particulate, iodine, and gaseous activity. The air samplers are used to collect particulate and/or iodine samples for analyses in the counting facilities

12.3.2.2.4 Portable Radiation Instruments

A complement of portable instruments is available for use by Radiation Protection. Certain instruments are also available to other personnel who have been trained in self-monitoring techniques and have passed a written and/or oral examination. A variety of instruments have been selected to cover the entire spectrum of radiation measurements expected to be made at Fermi 2. Sufficient quantities of each type have been obtained to permit use, calibration, maintenance, and repair. These instruments are calibrated at least annually when in use. The calibration is normally performed in the Radiation Protection instrument calibration room.

12.3.2.2.5 Other Radiation Instruments

Portal monitors are used to check personnel for contamination. A monitor is located in the security area at the main exits from the plant.

Frisker stations are located near contaminated areas in the plant so that personnel leaving the area can monitor themselves for radioactive contamination, thus minimizing the spread of the contamination.

The gamma radiation levels in certain key areas are monitored by area radiation monitors (ARMs) which are discussed in Section 12.1. The ARMs locations, ranges, and alarm setpoints are described in Section 12.1.

12.3.2.2.6 Shielding

Temporary shielding in the form of concrete blocks, lead bricks, lead sheets, lead wool, water, or other material is provided where necessary to reduce personnel dose during operational and maintenance activities in radiation and high radiation areas. Each activity in these areas requires a specific evaluation of dose rates, job complexity (number of people and overall time required), available space, and time required to place and remove temporary shielding. For these reasons, the use of temporary shielding is determined on a case basis rather than at a specific dose-rate action level.

12.3.3 Operating Procedures

Administrative and technical procedures, in conjunction with facility design, are used to ensure that the exposures to personnel are kept ALARA.

Edison personnel will be trained in radiation protection as necessary, as stated in Section 13.2. To ensure compliance with Edison's policy of keeping exposures ALARA, Radiation Protection personnel have the authority to prevent unsafe practices and to halt any activity deemed radiologically unsafe. The Radiation Protection Manager has a direct line of

communication with the Executive Director – Nuclear Production regarding any activity or condition that is causing, or threatens to cause, a radiological incident or occurrence.

New procedures and procedure revisions that impact the Radiation Protection program are reviewed by Radiation Protection as a normal part of the plant procedure review/approval cycle. The Radiation Protection Section also participates in ALARA planning and review to identify administrative and operational methods by which dose can be reduced. Approved changes are promptly implemented. In addition, procedures for receiving and evaluating suggestions from employees relating to radiation protection and ALARA dose control have been established.

The following practices, which are described in written procedures, or training are followed:

a. Permanent shielding is used, when feasible. Dose may be reduced by having workers stay behind walls or in areas of lower radiation level when not actively involved in work in radiation areas. On some jobs temporary shielding, such as lead sheets draped over a pipe on either side of a valve, or concrete blocks stacked around a piece of equipment, is used to reduce dose. The use of temporary shielding will be considered if the total dose, which includes the dose to install and remove the shielding, is reduced.

b. Systems and major pieces of equipment that are subject to crud buildup, such as the radwaste system, the cleanup pumps, and the reactor water recirculation pumps, have been equipped with connections that are used for flushing. Prior to performing maintenance work, consideration will be given to flushing and/or chemically decontaminating the system or piece of equipment to reduce the crud levels, and thus reduce the dose received to complete the work

c. Work in high radiation or airborne radioactivity areas is planned and controlled by the use of a radiation work permit. The purpose of the planning is to carefully prepare for the job so that it can be expeditiously performed in a proper and safe manner with minimum exposure to personnel

d. On complex jobs or jobs with exceptionally high radiation levels, "dry runs" are made, and in some cases mockups are used, to familiarize the workers with the exact operations they must perform at the job site. These techniques assist in making the work go more smoothly and thus minimize the amount of time spent in the radiation field

e. As many work activities as reasonably achievable are performed outside radiation areas. Reading instruction manuals or maintenance procedures, adjusting tools or jigs, repairing valve internals, and prefabricating components are examples of activities that are performed outside radiation areas whenever feasible

f. For long-term repair jobs involving radiation exposure, consideration is given to setting up communications systems, such as sound-powered telephones or closed-circuit television, so that key personnel can check on the progress of work from a lower radiation area. In addition, both local and radio communication devices suitable for use with respirators are available

g. On some jobs, special tools or jigs are used when their use would permit the job to be performed more efficiently or would prevent errors, thus reducing the time in the radiation field. Special tools may also be used if their use would increase the distance from the source to the worker, thus reducing the exposure rate. These tools or jigs are used only if the total exposure, which includes that received during installation and removal, is reduced

h. Local access control for prolonged work in high radiation areas is set up in low radiation areas so that personnel do not receive unnecessary dose when not actually performing radiation work and because personnel may spend significant amounts of time changing protective clothing and respiratory equipment in these entry and exit areas. These entry and exit locations are set up to control the spread of contamination from the job site and, when feasible, to confine local contamination to a small area

i. Protective clothing and respiratory equipment specification takes the worker's comfort into consideration. This can increase efficiency and reduce the time spent in radiation areas

j. Local containments such as glove bags may be taped around valves or other fixed components during maintenance so that personnel will be less likely to be exposed to the contamination produced during the work

k. Radiation levels are posted for personnel to review, and when a wide range of radiation and contamination levels exists, high-radiation areas are identified. Individuals are instructed to avoid high radiation areas as much as possible, consistent with performing their assigned jobs, and to minimize time spent in areas where significant radiation and contamination levels exist

l. Personnel wear direct-reading or electronic dosimeters so that they can monitor their accumulated dose during the job. In addition, on certain jobs where the radiation fields may vary or cannot be clearly delineated to personnel, personnel may be provided with a personal electronic doserate device or dose-rate instrument. Personal electronic devices provide display and/or an audible alarm function. Thus, personnel will receive warning if they enter areas of high radiation, which would aid in minimizing time spent in these areas

m. On jobs with exceptionally high radiation levels, stay-time limitations are used to ensure that personnel are removed from an area before exceeding their allowable dose for the job being performed

n. On maintenance jobs involving high radiation levels, the job preplanning includes estimates of the man-rem needed to complete the job. At the completion of the job, a debriefing session is held involving people who actually performed the work to investigate lessons learned as to how the work could have been completed more efficiently, thus resulting in lower exposure. This information, together with the procedures used and actual man-rem expended, is maintained for future reference. The information recorded includes the radiation, contamination, and airborne activity levels determined during the work. Records of any external body contamination or internal

contamination resulting from the job are maintained to provide guidance at the planning stage of future similar operations

o. High levels of contamination that may become airborne normally occur in areas controlled by Radiation Protection. Access control procedures, as described in plant procedures, help prevent inadvertent entry into contaminated areas. In addition, any areas that are airborne radioactivity areas will be posted. The sign will have instructions for personnel who must enter the area. A radiation work permit is also required for entry to posted airborne radioactivity areas

p. The airborne radioactivity level is determined in enclosed spaces prior to entry for maintenance or other special operations if there is potential airborne contamination. If airborne radioactivity levels are above control limits, reasonable measures will be taken to remove or control the source of this airborne radioactivity prior to commencing the job. If personnel entry is required into areas of known airborne radionuclide concentration where the source of airborne radioactivity cannot be removed or controlled below a threshold value, either occupancy will be limited and monitored or respiratory protection equipment use will be evaluated to maintain total effective dose equivalent ALARA. If entry into an area of unknown but potentially significant airborne radionuclide concentration is required, respiratory protection equipment may be required.

12.3.4 Personnel Dosimetry

12.3.4.1 External Dosimetry

All personnel who enter a radiologically controlled area are monitored with both primary and secondary dosimeters, except those members of the public who are designated as visitors by Plant Management. These visitors are escorted and are normally monitored only by a secondary dosimeter.

12.3.4.1.1 Dosimeters of Legal Record

Dosimeters of Legal Record (DLRs) are used as primary dosimeters to determine beta-gamma and neutron dose.

Area-monitoring DLRs are placed in or around normally occupied areas, including office areas, warehouses, and the visitor center to determine total exposure in these areas. These badges are normally exchanged quarterly.

12.3.4.1.2 Direct-Reading Dosimeters

The pocket dosimeter provides an immediately available indication of radiation dose and may be used as a secondary dosimeter. Direct-reading dosimeters are tested and calibrated at least annually, whenever new dosimeters are put into use, whenever the dosimeter has been damaged, and whenever a significant discrepancy exists between primary and secondary dosimetry. The testing of direct-reading dosimeters is performed in accordance with the provisions of Regulatory Guide 8.4.

The choice of range of direct-reading dosimeters to be used is specified by Radiation Protection. Direct-reading dosimeters of appropriate ranges are provided.

Dosimeter chargers are available for rezeroing the dosimeters.

12.3.4.1.3 Electronic Dosimeters

Electronic dosimeters, which provide an immediate indication of gamma radiation dose, may be used as secondary dosimeters. These dosimeters will give indication of failure conditions, e.g., low battery or detector failure.

12.3.4.1.4 Neutron Dosimetry

Neutron dose exposure is determined by the use of the normal primary dosimeter or by an estimation of dose based on survey results and time spent in the area.

12.3.4.1.5 Extremity and Special Dosimetry

Personnel assigned to work involving dose to the extremities significantly higher than dose to the whole body are issued finger rings, wrist badges, or other special dosimeters to determine the extremity dose.

Special dosimetry devices or additional DLRs may be issued when unusual conditions or nonuniform radiation fields exist. Personnel involved in high radiation work may also be assigned alarming dosimeters or audible rate-dependent dosimeters (chirpers) to help them minimize their time in local high radiation fields and thus minimize their exposure.

12.3.4.1.6 Abnormal Exposures

Abnormal personnel-monitoring results are immediately reported to Radiation Protection supervision who initiates an investigation to determine if the abnormal dose is valid and the related circumstances. The investigation is documented. Abnormal monitoring results include those that result from lost or damaged dosimeters as well as anomalies.

12.3.4.2 Internal Dosimetry

Internal dosimetry bioassay analysis is provided using both body counting (direct bioassay) and biological sample analysis (indirect bioassay) techniques.

Bioassay analysis will be used to assess the amount of radioactive material (if any) that has been taken up by plant personnel. Bioassay analysis will be performed whenever significant internal contamination is suspected. Additional bioassay analysis may be performed during periods of extensive maintenance activity, such as refueling, and as directed by Radiation Protection.

Radiochemical analysis of urine and/or feces may also be used to evaluate possible intakes of non-gamma-emitting radionuclides. Both urine and fecal sample kits will be available and will be issued to an individual as deemed necessary. These samples will be processed by a contracted service agency.

12.3.4.3 Processing and Recording

The official and permanent record of accumulated external radiation dose received by individuals will be obtained from the interpretation of DLRs and associated information.

Readout of DLRs will be performed quarterly or as deemed necessary. Daily dosimetry updating will be based upon direct reading or electronic dosimeter readouts. A record of each person's official dose as determined by the DLR will be maintained.

The personnel dose records will document the following:

a. Period and amount of occupational dose to sources of radiation external to the body from Fermi 2 licensed material

b. Documentation of external dose received during a period when monitoring devices were damaged or lost

c. Evaluation of exposure due to internal radiation dose, including bioassay analysis from Fermi 2 licensed material.

Each monitored radiation worker will be advised at least annually of the worker's dose if it exceeds 100 mrem TEDE or 100 mrem to any organ, or if requested by the worker.

Additionally, radiation monitoring records, environmental monitoring records, instrument repair records, and calibration records provide supportive information regarding occupational dose data. Radiation Protection records are transferred periodically for permanent retention and filming or imaging.

12.3.5 Sealed Source Leak Testing

Licensed sealed sources with the potential for significant radiological impact, except sources that have been installed in the reactor or are inaccessible, are leak tested at least semiannually.