REGULATORY INFORMATION DISTRIBUTION SYSTEM (RIDS)

ACCESSION NBR:7910010222 DOC.DATE: 79/09/28 NOTARIZED: YES DOCKET #
FACIL:STN-50-528 Palo Verde Nuclear Station, Unit 1, Arizona Publi 05000528
STN-50-529 Palo Verde Nuclear Station, Unit 2, Arizona Publi 05000529
STN-50-530 Palo Verde Nuclear Station, Unit 3, Arizona Publi 05000530
AUTH.NAME AUTHOR AFFILIATION
VAN BRUNT,E,E, Arizona Public Service Co.
RECIP.NAME RECIPIENT AFFILIATION
Office of Nuclear Reactor Regulation

SUBJECT: Forwards "TMI-2 Lessons Learned Implementation Rept."

DISTRIBUTION CODE: B001B COPIES RECEIVED:LTR 1 ENCL 5 SIZE: 2+120
TITLE: PSAR/FSAR Amdts, & Related Correspondence

NOTES: See rpt S 7910010224

	RECIPIENT ID CODE/NAME	COPIES LTTR	COPIES ENCL	RECIPIENT ID CODE/NAME	COPIES LTTR	COPIES ENCL
ACTION:	05 PM E. LICITRA	1	1	AD LWR	1	0
	BC LWR #3	1	0	LA LWR #3	1	0
INTERNAL:	01 REG FILE	1	1	02 NRC PDR	1	1
	06 I & E	2	2	08 OPERA LIC BR	1	1
	09 GEOSCIEN BR	4	4	10 QAB	1	1
	11 MECH ENG BR	1	1	12 STRUC ENG BR	1	1
	13 MATL ENG BR	2	2	15 REAC SYS BR	1	1
	16 ANALYSIS BR	1	1	17 CORE PERF BR	1	1
	18 AUX SYS BR	1	1	19 CONTAIN SYS	1	1
	20 I & C SYS BR	1	1	21 POWER SYS BR	1	1
	22 AD SITE TECH	1	0	26 ACCDNT ANLYS	1	1
	27 EFFL TRT SYS	1	1	28 RAD ASMT BR	1	1
	29 KIRKWOOD	1	1	AD FOR ENG	1	0
	AD PLANT SYS	1	0	AD REAC SAFETY	1	0
	AD SITE ANLYSIS	1	0	DIRECTOR NRR	1	0
	HYDRO-METEOR BR	2	2	MPA	1	0
	OELD	1	0			
EXTERNAL:	03 LPDR	1	1	04 NSIC	1	1
	30 ACRS	10	10			

ENCL TO: FILES
NRC PDR
LPDR
TERA
PM

LTR
MOORE
EPB #2 BC
R. GILBERT
EPB #2 LA

MA

OCT 2 1979

TOTAL NUMBER OF COPIES REQUIRED: LTTR 55 ~~51~~ ENCL 45 ~~40~~

ARIZONA PUBLIC SERVICE COMPANY
P. O. BOX 21666 · PHOENIX, ARIZONA 85036

September 28, 1979
ANPP-13905 - JMA/DBK

Director of Nuclear Reactor Regulation
U.S. Nuclear Regulatory Commission
Washington, D.C. 20555

Re: Palo Verde Nuclear Generating Station
Units 1, 2 and 3
Docket Nos. STN 50-528/529/530

Dear Sir:

As a result of the Three Mile Island accident, Arizona Public Service Company (APS) is in the process of assuring that the lessons learned from TMI-2 are reflected in the Palo Verde Nuclear Generating Station (PVNGS) design and operation.

To accomplish this objective, the APS President and Chief Executive Officer, by a directive issued April 12, 1979, established a Safety Evaluation Task Force "to conduct a complete review and analysis of the Three Mile Island accident and its implications for the Palo Verde Nuclear Generating Station project." This task force is comprised of fourteen (14) members from knowledgeable, high levels of management of the utilities participating in the Palo Verde project, the engineer-constructor for the project, the nuclear steam supply system supplier, and turbine generator supplier to the project and the academic technical consultants to the Arizona State Senate and House legislative committees organized to review and consider the implications of the TMI accident.

The task force is exercising oversight of the on-going independent in-depth reviews, initiated since the TMI accident, of the Palo Verde design, planned administrative and operational procedures, training and qualification programs, and emergency response plans. In this connection, it is closely following the work and recommendations of the many industry and governmental organizations currently conducting similar, but more generic investigations related to the TMI accident, including particularly the NRC's Lessons Learned Task Force.

B001
SE
1/5
ENCL TO:
FILES
NRC POR
LPDR
TERA
P.M.

7910010 22

Upon receipt of the TMI-2 Lessons Learned Task Force Status Report and Short Term Recommendations (NUREG-0578), modified as set forth in the memorandum dated August 20, 1979 from Harold R. Denton, Director, Office of Nuclear Reactor Regulation to the NRC Commissioners, the recommendations related to the design and operation of the Palo Verde project were evaluated. The results of this evaluation are incorporated in the report entitled TMI-2 Lessons Learned Implementation Report submitted herewith. The report identifies those NUREG-0578 recommendations which are incorporated into the present Palo Verde design, identifies recommendations that are not applicable to the Palo Verde design and sets forth APS' commitments to develop the analyses, design modifications, operational procedures and other measures necessary to meet such recommendations in accordance with the schedule specified in NUREG-0578. The report will be amended as appropriate to incorporate the manner in which such commitments are implemented.

Five (5) copies of this report are enclosed for your review. It is hoped that this report, in conjunction with the PVNGS Final Safety Analysis Report to be submitted in October, 1979, will assist in your timely review of the implications of TMI on PVNGS.

Respectfully submitted,

ARIZONA PUBLIC SERVICE COMPANY

By: Edwin E. Van Brunt
Edwin E. Van Brunt, Jr.
Vice President

STATE OF ARIZONA)
) ss.
County of Maricopa)

On its own behalf and as agent for all other joint participants.

Subscribed and sworn to before me this 27 day of Sept, 1979.

John M. Allen
Notary Public

My Commission expires:
My Commission Expires Jan. 23, 1983

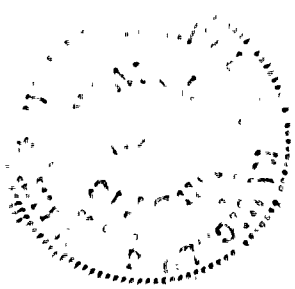

REGULATORY INFORMATION DISTRIBUTION SYSTEM (RIDS)

ACCESSION NBR:7910010222 DOC.DATE: 79/09/28 NOTARIZED: YES DOCKET #
FACIL:STN-50-528 Palo Verde Nuclear Station, Unit 1, Arizona Publi 05000528
STN-50-529 Palo Verde Nuclear Station, Unit 2, Arizona Publi 05000529
STN-50-530 Palo Verde Nuclear Station, Unit 3, Arizona Publi 05000530
AUTH.NAME AUTHOR AFFILIATION
VAN BRUNT,E.E. Arizona Public Service Co.
RECIP.NAME RECIPIENT AFFILIATION
Office of Nuclear Reactor Regulation

SUBJECT: Forwards "TMI-2 Lessons Learned Implementation Rept."

DISTRIBUTION CODE: B0016 COPIES RECEIVED:LTR 1 ENCL 5 SIZE: 2+120
TITLE: PSAR/FSAR Amdts. & Related Correspondence

NOTES:

	RECIPIENT ID CODE/NAME	COPIES LTTR	COPIES ENCL	RECIPIENT ID CODE/NAME	COPIES LTTR	COPIES ENCL
ACTION:	05 PM E. LICITRA	1	1	AD LWR	1	0
	BC LWR #3	1	0	LA LWR #3	1	0
INTERNAL:	01 REG FILE	1	1	02 NRC PDR	1	1
	06 I & E	2	2	08 OPERA LIC BR	1	1
	09 GEOSCIEN BR	4	4	10 QAB	1	1
	11 MECH ENG BR	1	1	12 STRUC ENG BR	1	1
	13 MATL ENG BR	2	2	15 REAC SYS BR	1	1
	16 ANALYSIS BR	1	1	17 CORE PERF BR	1	1
	18 AUX SYS BR	1	1	19 CONTAIN SYS	1	1
	20 I & C SYS BR	1	1	21 POWER SYS BR	1	1
	22 AD SITE TECH	1	0	26 ACCDNT ANLYS	1	1
	27 EFFL TRT SYS	1	1	28 RAD ASMT BR	1	1
	29 KIRKWOOD	1	1	AD FOR ENG	1	0
	AD PLANT SYS	1	0	AD REAC SAFETY	1	0
	AD SITE ANLYSIS	1	0	DIRECTOR NRR	1	0
	HYDRO-METEOR BR	2	2	MPA	1	0
	OELD	1	0			
EXTERNAL:	03 LPDR	1	1	04 NSIC	1	1
	30 ACRS	10	10			

ENCL TO: FILES
NRC PDR
LPDR
TERA
PM

LTR
MOORE
EPB #2 BC
R. GILBERT
EPB #2 LA

OCT 2 1979

TOTAL NUMBER OF COPIES REQUIRED: LTTR 55 (51) ENCL 45 (40)

ARIZONA PUBLIC SERVICE COMPANY
P. O. BOX 21666 • PHOENIX, ARIZONA 85036

September 28, 1979
ANPP-13905 - JMA/DBK

Director of Nuclear Reactor Regulation
U.S. Nuclear Regulatory Commission
Washington, D.C. 20555

Re: Palo Verde Nuclear Generating Station
Units 1, 2 and 3
Docket Nos. STN 50-528/529/530

Dear Sir:

As a result of the Three Mile Island accident, Arizona Public Service Company (APS) is in the process of assuring that the lessons learned from TMI-2 are reflected in the Palo Verde Nuclear Generating Station (PVNGS) design and operation.

To accomplish this objective, the APS President and Chief Executive Officer, by a directive issued April 12, 1979, established a Safety Evaluation Task Force "to conduct a complete review and analysis of the Three Mile Island accident and its implications for the Palo Verde Nuclear Generating Station project." This task force is comprised of fourteen (14) members from knowledgeable, high levels of management of the utilities participating in the Palo Verde project, the engineer-constructor for the project, the nuclear steam supply system supplier, and turbine generator supplier to the project and the academic technical consultants to the Arizona State Senate and House legislative committees organized to review and consider the implications of the TMI accident.

The task force is exercising oversight of the on-going independent in-depth reviews, initiated since the TMI accident, of the Palo Verde design, planned administrative and operational procedures, training and qualification programs, and emergency response plans. In this connection, it is closely following the work and recommendations of the many industry and governmental organizations currently conducting similar, but more generic investigations related to the TMI accident, including particularly the NRC's Lessons Learned Task Force.

B001
SE
1/5
ENCL TO:
FILES
NRC/ADR
LPDR
TERA
P.M.

7910010 225

Upon receipt of the TMI-2 Lessons Learned Task Force Status Report and Short Term Recommendations (NUREG-0578), modified as set forth in the memorandum dated August 20, 1979 from Harold R. Denton, Director, Office of Nuclear Reactor Regulation to the NRC Commissioners, the recommendations related to the design and operation of the Palo Verde project were evaluated. The results of this evaluation are incorporated in the report entitled TMI-2 Lessons Learned Implementation Report submitted herewith. The report identifies those NUREG-0578 recommendations which are incorporated into the present Palo Verde design, identifies recommendations that are not applicable to the Palo Verde design and sets forth APS' commitments to develop the analyses, design modifications, operational procedures and other measures necessary to meet such recommendations in accordance with the schedule specified in NUREG-0578. The report will be amended as appropriate to incorporate the manner in which such commitments are implemented.

Five (5) copies of this report are enclosed for your review. It is hoped that this report, in conjunction with the PVNGS Final Safety Analysis Report to be submitted in October, 1979, will assist in your timely review of the implications of TMI on PVNGS.

Respectfully submitted,

ARIZONA PUBLIC SERVICE COMPANY

By: Edwin E. Van Brunt
Edwin E. Van Brunt, Jr.
Vice President

STATE OF ARIZONA)
) ss.
County of Maricopa)

On its own behalf and as agent for all other joint participants.

Subscribed and sworn to before me this 27 day of Sept, 1979.

John M. Allen
Notary Public

My Commission expires:
My Commission Expires Jan. 23, 1983

REGULATORY INFORMATION DISTRIBUTION SYSTEM (RIDS)

ACCESSION NBR:7910010222 DOC.DATE: 79/09/28 NOTARIZED: YES DOCKET #
FACIL:STN-50-528 Palo Verde Nuclear Station, Unit 1, Arizona Publi 05000528
STN-50-529 Palo Verde Nuclear Station, Unit 2, Arizona Publi 05000529
STN-50-530 Palo Verde Nuclear Station, Unit 3, Arizona Publi 05000530
AUTH.NAME AUTHOR AFFILIATION
VAN BRUNT,E.E. Arizona Public Service Co.
RECIP.NAME RECIPIENT AFFILIATION
Office of Nuclear Reactor Regulation

SUBJECT: Forwards "TMI-2 Lessons Learned Implementation Rept."

DISTRIBUTION CODE: B001D COPIES RECEIVED:LTR 1 ENCL 5 SIZE: 2+120
TITLE: PSAR/FSAR Amdts. & Related Correspondence

NOTES:

	RECIPIENT ID CODE/NAME	COPIES LTTR	COPIES ENCL	RECIPIENT ID CODE/NAME	COPIES LTTR	COPIES ENCL
ACTION:	05 PM E. LICITRA	1	1	AD LWR	1	0
	BC LWR #3	1	0	LA LWR #3	1	0
INTERNAL:	01 REG FILE	1	1	02 NRC PDR	1	1
	06 I & E	2	2	08 OPERA LIC BR	1	1
	09 GEOSCIEN BR	4	4	10 QAB	1	1
	11 MECH ENG BR	1	1	12 STRUC ENG BR	1	1
	13 MATL ENG BR	2	2	15 REAC SYS BR	1	1
	16 ANALYSIS BR	1	1	17 CORE PERF BR	1	1
	18 AUX SYS BR	1	1	19 CONTAIN SYS	1	1
	20 I & C SYS BR	1	1	21 POWER SYS BR	1	1
	22 AD SITE TECH	1	0	26 ACCDNT ANLYS	1	1
	27 EFFL TRT SYS	1	1	28 RAD ASMT BR	1	1
	29 KIRKWOOD	1	1	AD FOR ENG	1	0
	AD PLANT SYS	1	0	AD REAC SAFETY	1	0
	AD SITE ANLYSIS	1	0	DIRECTOR NRR	1	0
	HYDRO-METEOR BR	2	2	MPA	1	0
	OELD	1	0			
EXTERNAL:	03 LPDR	1	1	04 NSIC	1	1
	30 ACRS	10	10			

ENCL TO: FILES
NRC PDR
LPDR
TERA
PM

LTR
MOORE
EPB #2 BC
R. GILBERT
EPB #2 LA

OCT 2 1979

TOTAL NUMBER OF COPIES REQUIRED: LTTR ~~51~~ 55 ENCL ~~40~~ 45

ARIZONA PUBLIC SERVICE COMPANY
P. O. BOX 21666 · PHOENIX, ARIZONA 85036

September 28, 1979
ANPP-13905 - JMA/DBK

Director of Nuclear Reactor Regulation
U.S. Nuclear Regulatory Commission
Washington, D.C. 20555

Re: Palo Verde Nuclear Generating Station
Units 1, 2 and 3
Docket Nos. STN 50-528/529/530

Dear Sir:

As a result of the Three Mile Island accident, Arizona Public Service Company (APS) is in the process of assuring that the lessons learned from TMI-2 are reflected in the Palo Verde Nuclear Generating Station (PVNGS) design and operation.

To accomplish this objective, the APS President and Chief Executive Officer, by a directive issued April 12, 1979, established a Safety Evaluation Task Force "to conduct a complete review and analysis of the Three Mile Island accident and its implications for the Palo Verde Nuclear Generating Station project." This task force is comprised of fourteen (14) members from knowledgeable, high levels of management of the utilities participating in the Palo Verde project, the engineer-constructor for the project, the nuclear steam supply system supplier, and turbine generator supplier to the project and the academic technical consultants to the Arizona State Senate and House legislative committees organized to review and consider the implications of the TMI accident.

The task force is exercising oversight of the on-going independent in-depth reviews, initiated since the TMI accident, of the Palo Verde design, planned administrative and operational procedures, training and qualification programs, and emergency response plans. In this connection, it is closely following the work and recommendations of the many industry and governmental organizations currently conducting similar, but more generic investigations related to the TMI accident, including particularly the NRC's Lessons Learned Task Force.

B001
SE
1/5
ENCL TO:
FILES
NRC POR
LPDR
TERA
P.M.

7910010 22

Upon receipt of the TMI-2 Lessons Learned Task Force Status Report and Short Term Recommendations (NUREG-0578), modified as set forth in the memorandum dated August 20, 1979 from Harold R. Denton, Director, Office of Nuclear Reactor Regulation to the NRC Commissioners, the recommendations related to the design and operation of the Palo Verde project were evaluated. The results of this evaluation are incorporated in the report entitled TMI-2 Lessons Learned Implementation Report submitted herewith. The report identifies those NUREG-0578 recommendations which are incorporated into the present Palo Verde design, identifies recommendations that are not applicable to the Palo Verde design and sets forth APS' commitments to develop the analyses, design modifications, operational procedures and other measures necessary to meet such recommendations in accordance with the schedule specified in NUREG-0578. The report will be amended as appropriate to incorporate the manner in which such commitments are implemented.

Five (5) copies of this report are enclosed for your review. It is hoped that this report, in conjunction with the PVNGS Final Safety Analysis Report to be submitted in October, 1979, will assist in your timely review of the implications of TMI on PVNGS.

Respectfully submitted,

ARIZONA PUBLIC SERVICE COMPANY

By: Edwin E. Van Brunt

Edwin E. Van Brunt, Jr.
Vice President

STATE OF ARIZONA)
) ss.
County of Maricopa)

On its own behalf and as agent for all other joint participants.

Subscribed and sworn to before me this 27 day of Sept, 1979.

John M. Allen
Notary Public

My Commission expires:
My Commission Expires Jan. 23, 1983

Superseded per Revised plan dtd 4-6-81

50-528

PALO VERDE NUCLEAR GENERATING STATION

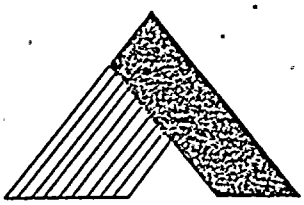

UNITS 1, 2 & 3

TMI-2 LESSONS LEARNED IMPLEMENTATION REPORT

Docket # 50-528/529/530
Control # 7910010222
Date 9/28/79 of Document
REGULATORY DOCKET FILE

RETURN TO REACTOR DOCKET FILES

SEPTEMBER 1979

ARIZONA PUBLIC SERVICE COMPANY
P. O. BOX 21666 · PHOENIX, ARIZONA 85036

September 28, 1979
ANPP-13905 - JMA/DBK

Director of Nuclear Reactor Regulation
U.S. Nuclear Regulatory Commission
Washington, D.C. 20555

Re: Palo Verde Nuclear Generating Station
Units 1, 2 and 3
Docket Nos. STN 50-528/529/530

Dear Sir:

As a result of the Three Mile Island accident, Arizona Public Service Company (APS) is in the process of assuring that the lessons learned from TMI-2 are reflected in the Palo Verde Nuclear Generating Station (PVNGS) design and operation.

To accomplish this objective, the APS President and Chief Executive Officer, by a directive issued April 12, 1979, established a Safety Evaluation Task Force "to conduct a complete review and analysis of the Three Mile Island accident and its implications for the Palo Verde Nuclear Generating Station project." This task force is comprised of fourteen (14) members from knowledgeable, high levels of management of the utilities participating in the Palo Verde project, the engineer-constructor for the project, the nuclear steam supply system supplier, and turbine generator supplier to the project and the academic technical consultants to the Arizona State Senate and House legislative committees organized to review and consider the implications of the TMI accident.

The task force is exercising oversight of the on-going independent in-depth reviews, initiated since the TMI accident, of the Palo Verde design, planned administrative and operational procedures, training and qualification programs, and emergency response plans. In this connection, it is closely following the work and recommendations of the many industry and governmental organizations currently conducting similar, but more generic investigations related to the TMI accident, including particularly the NRC's Lessons Learned Task Force.

Upon receipt of the TMI-2 Lessons Learned Task Force Status Report and Short Term Recommendations (NUREG-0578), modified as set forth in the memorandum dated August 20, 1979 from Harold R. Denton, Director, Office of Nuclear Reactor Regulation to the NRC Commissioners, the recommendations related to the design and operation of the Palo Verde project were evaluated. The results of this evaluation are incorporated in the report entitled TMI-2 Lessons Learned Implementation Report submitted herewith. The report identifies those NUREG-0578 recommendations which are incorporated into the present Palo Verde design, identifies recommendations that are not applicable to the Palo Verde design and sets forth APS' commitments to develop the analyses, design modifications, operational procedures and other measures necessary to meet such recommendations in accordance with the schedule specified in NUREG-0578. The report will be amended as appropriate to incorporate the manner in which such commitments are implemented.

Five (5) copies of this report are enclosed for your review. It is hoped that this report, in conjunction with the PVNGS Final Safety Analysis Report to be submitted in October, 1979, will assist in your timely review of the implications of TMI on PVNGS.

Respectfully submitted,

ARIZONA PUBLIC SERVICE COMPANY

By: Edwin E. Van Brunt

Edwin E. Van Brunt, Jr.
Vice President

STATE OF ARIZONA)
) ss.
County of Maricopa)

On its own behalf and as agent for all other joint participants.

Subscribed and sworn to before me this 27 day of Sept, 1979.

John M. Allen
Notary Public

My Commission expires:
My Commission Expires Jan. 23, 1983

INTRODUCTION

The Palo Verde Nuclear Generating Station NUREG-0578 Evaluation addresses the "TMI-2 Lessons Learned Task Force Status Report And Short Term Recommendations" (NUREG-0578), July 1979, as supplemented by letter dated August 20, 1979 from Harold R. Denton, Director, Office of Nuclear Reactor Regulation to the NRC Commissioners.

Each recommendation is addressed, as it applies to the Palo Verde Nuclear Generating Station (PVNGS) design and operation, in the following manner:

(1) Descriptions of the existing PVNGS design correspond with information presented in the PVNGS Final Safety Analysis Report (FSAR).

(2) Proposed modifications, evaluations and analyses of the PVNGS design, as discussed herein, will be summarized in revisions to this report.

(3) Recommendation numbering corresponds to that used in NUREG-0578.

This report will be referenced by subsequent PVNGS FSAR amendments, as appropriate, to address in the FSAR, required modifications and analyses as discussed herein.

TABLE OF CONTENTS

INTRODUCTION

DESIGN AND ANALYSIS — PAGE NO.

2.1.1 Emergency Power Supply Requirements for the Pressurizer Heaters, Power Operated Relief Valves and Block Valves, and Pressurizer Level Indicators in PWRs. 2.1.1-1

2.1.1.a Pressurizer Heater Power Supply 2.1.1-1

2.1.1.b Power Supply for Pressurizer Relief and Block Valves and Pressurizer Level Indocators. 2.1.1-5

2.1.2 Performance Testing for BWR and PWR Relief and Safety Valves. 2.1.2-1

2.1.3 Information to Aid Operators in Accident Diagnosis and Control. 2.1.3-1

2.1.3.a Direct Indication of Power Operated Relief Valve and Safety Valve Position for PWRs and BWRs 2.1.3-1

2.1.3.b Instrumentation for Detection of Inadequate Core Cooling in PWRs and BWRs 2.1.3-3

2.1.4 Containment Isolation Provisions for PWRs and BWRs 2.1.4-1

2.1.5 Post-Accident Hydrogen Control Systems for PWR and BWR Containments. 2.1.5-1

2.1.5.a Dedicated Penetrations for External Recombiner or Post-Accident External Purge System. 2.1.5-1

DESIGN AND ANALYSIS (continued) PAGE NO.

2.1.5.b Inerting BWR Containments. 2.1.5-3

2.1.5.c Capability to Install Hydrogen Recombiner at Each Light Water Nuclear Power Plant. 2.1.5-4

2.1.6 Post Accident Control of Radiation in Systems Outside Containment of PWRs and BWRs 2.1.6-1

2.1.6.a Integrity of Systems Outside Containment Likely to Contain Radioactive Materials (Engineered Safety Systems and Auxiliary Systems) for PWRs and BWRs 2.1.6-1

2.1.6.b Design Review of Plant Shielding and Environmental Qualification of Equipment for Spaces/Systems Which May Be Used in Operations 2.1.6-3

2.1.7 Improved Auxiliary Feedwater System Reliability for PWRs 2.1.7-1

2.1.7.a Automatic Initiation of the Auxiliary Feedwater System for PWRs. . . . 2.1.7-1

2.1.7.b Auxiliary Feedwater Flow Indication to Steam Generator for PWRs. 2.1.7-7

2.1.8 Instrumentation to Follow the Course of an Accident 2.1.8-1

2.1.8.a Improved Post-Accident Sampling Capability 2.1.8-1

2.1.8.b Increased Range of Radiation Monitors. . . 2.1.8-4

2.1.8.c Improved In-Plant Iodine Instrumentation. 2.1.8-7

2.1.9 Analysis of Design and Off-Normal Transients and Accidents 2.1.9-1

DESIGN AND ANALYSIS (continued) PAGE NO.

2.1.10 Instrumentation to Monitor Containment Conditions During the Course of an Accident. 2.1.10-1

2.1.11 Installation of Remotely Operated High Point Vents in the Reactor Coolant System. 2.1.11-1

OPERATIONS

2.2.1 Improved Reactor Operations Command Function. 2.2.1-1

2.2.1.a Shift Supervisors Responsibilities. 2.2.1-1

2.2.1.b Shift Technical Advisor 2.2.1-4

2.2.1.c Shift Relief and Turnover Procedure 2.2.1-6

2.2.2 Improved In-Plant Emergency Procedures and Preparations. 2.2.2-1

2.2.2.a Control Room Access 2.2.2-1

2.2.2.b Onsite Technical Support Center 2.2.2-3

2.2.2.c Onsite Operational Support Center 2.2.2-5

2.1.1 EMERGENCY POWER SUPPLY REQUIREMENTS FOR THE PRESSURIZER HEATERS, POWER OPERATED RELIEF VALVES AND BLOCK VALVES, AND PRESSURIZER LEVEL INDICATORS IN PWRs

2.1.1.a PRESSURIZER HEATER POWER SUPPLY

NUREG-0578 Position

1. The pressurizer heater power supply design shall provide the capability to supply, from either the offsite power source or the emergency power source (when offsite power is not available), a predetermined number of pressurizer heaters and associated controls necessary to establish and maintain natural circulation at hot standby conditions. The required heaters and their controls shall be connected to the emergency buses in a manner that will provide redundant power supply capability.

2. Procedures and training shall be established to make the operator aware of when and how the required pressurizer heaters shall be connected to the emergency buses. If required, the procedures shall identify under what conditions selected emergency loads can be shed from the emergency power source to provide sufficient capacity for the connection of the pressurizer heaters.

3. The time required to accomplish the connection of the preselected pressurizer heater to the emergency buses shall be consistent with the timely initiation and maintenance of natural circulation conditions.

4. Pressurizer heater motive and control power interfaces with the emergency buses shall be accomplished through devices that have been qualified in accordance with safety-grade requirements.

PVNGS Evaluation

The PVNGS pressurizer heaters are powered as follows:

1. The pressurizer heaters (36 elements rated at 50 KW each, connected in 12 groups of 3 delta-connected elements each) have a total capacity of 1800 KW. The heaters are supplied 480 volt power from the non-Class IE and Class IE distribution systems as follows:

	Number of Heaters	Capacity (KW)	480V Bus	IE Bus
A.	5-3 element groups	750	NGN-L11	No
B.	5-3 element groups	750	NGN-L12	No
C.	1-3 element group	150	PGA-L33	Yes
D.	1-3 element group	150	PGB-L32	Yes

Maintenance of natural circulation at hot standby conditions requires 150 KW of heaters. These heaters are immediately available from either of two redundant Class IE buses, fed independently by Safety Trains A and B. Controls for these heaters are likewise independent. As the Class IE buses are a part of the ESF distribution system, they are fed either from the offsite power system or the diesel generators when offsite power is not available.

Heaters supplied from the non-Class IE power system are fed from the offsite power system and are available for manual interconnection to the diesel generators when offsite power is not available.

2. Heaters fed from the Class IE power system (150KW) are automatically shed upon receipt of a Loss of Offsite Power (LOP) or a Safety Injection Activation Signal (SIAS). They may subsequently be manually reconnected to the ESF buses without shedding of any loads from the Class IE buses.

   Heaters fed from non-Class IE buses can also be manually connected to the Class IE buses for powering by either the offsite power system or the diesel generators through the ESF transformers. These heaters are available in 150 KW blocks (0-150 KW in the case of the two proportional groups). Sufficient margin exists in the diesel generators for at least an additional 300 KW of heaters to be backfed from each Class IE bus without the shedding of selected emergency loads.

3. If an SIAS or LOP signal are received during an accident or severe transient (shedding the heaters connected to the Class IE buses), the heaters are available for immediate reconnection to the Class IE bus from the control room.

4. The redundant pressurizer heaters required for maintenance of natural circulation at hot standby are fed from Class IE buses via Class IE load side breakers qualified in accordance with safety-grade requirements.

The PVNGS pressurizer heaters, as presently designed, comply with the recommendations of NUREG-0578, July 1979.

2.1.1 EMERGENCY POWER SUPPLY REQUIREMENTS FOR THE PRESSURIZER HEATERS, POWER OPERATED RELIEF VALVES AND BLOCK VALVES, AND PRESSURIZER LEVEL INDICATORS IN PWRs

2.1.1.b POWER SUPPLY FOR PRESSURIZER RELIEF AND BLOCK VALVES AND PRESSURIZER LEVEL INDICATORS

NUREG-0578 Position

1. Motive and control components of the power-operated relief valves (PORVs) shall be capable of being supplied from either the offsite power source or the emergency power source when the offsite power is not available.

2. Motive and control components associated with the PORV block valves shall be capable of being supplied from either the offsite power source or the emergency power source when the offsite power is not available.

3. Motive and control power connections to the emergency buses for the PORVs and their associated block valves shall be through devices that have been qualified in accordance with safety-grade requirements.

4. The pressurizer level indication instrument channels shall be powered from the vital instrument buses. These buses shall have the capability of being supplied from either the offsite power source or the emergency power source when offsite power is not available.

PVNGS Evaluation

1. PVNGS does not use PORVs and block valves.

2. PVNGS does not use PORVs and block valves.

3. PVNGS does not use PORVs and block valves.

4. Two channels of Class IE level instrumentation are provided for PVNGS. Pressurizer level channels L-110X and L-110Y (refer to Figure 2.1.11-2) are indicated in the control room. Channel L-110X is also recorded in the control room.

   The pressurizer level instrumentation is powered from 120V AC Class IE instrument buses E-PNA-D25 and E-PNB-D26 (refer to Figure 2.1.1-1). These buses are normally powered through inverters from Class IE batteries. The Class IE battery chargers are powered from offsite power or from the diesel generators when offsite power is not available.

The pressurizer level indicators, as presently designed, comply with the recommendations of NUREG-0578, July 1979.

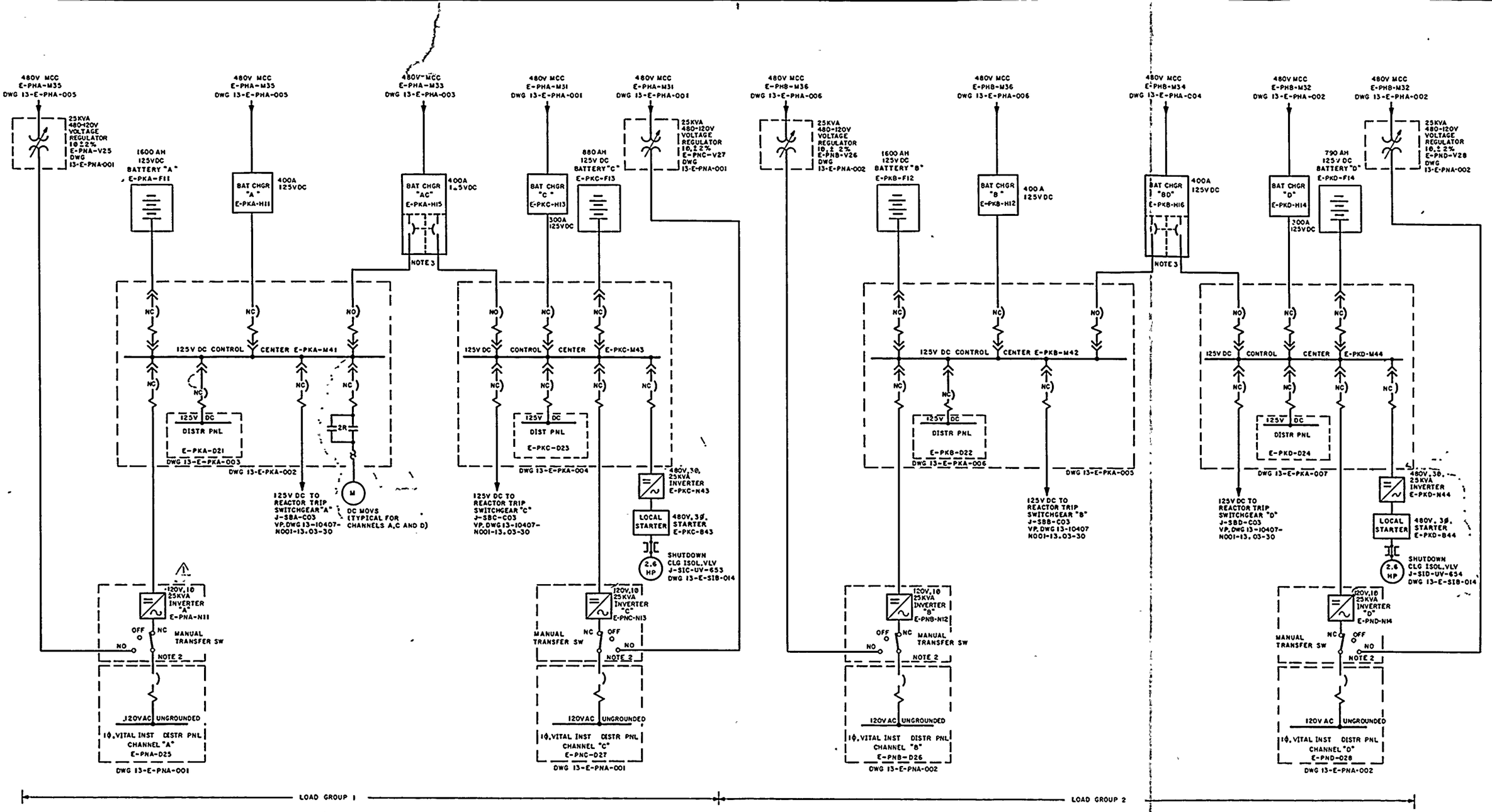

NOTES:

1. FOR LEGEND & GENERAL NOTES REFER TO DWGS 13-E-ZZB-001 THROUGH 007
2. THIS INDICATES MANUAL TWO POLE THREE POSITION TRANSFER SWITCH
3. OUTPUT SWITCHES IN BATTERY CHARGERS "AC" & "BD" ARE MECHANICALLY INTERLOCKED TO OFFER THE POSSIBILITY OF EITHER BOTH OPEN OR ONE CLOSED AND ONE OPEN AT ANY TIME

13-E-PKA-001 REV 1

Palo Verde Nuclear Generating Station

SINGLE LINE DIAGRAM
DC POWER SYSTEM

Figure 2.1.1-1

2.1.2 PERFORMANCE TESTING FOR BWR AND PWR RELIEF AND SAFETY VALVES

NUREG-0578 Position

Pressurized water reactor and boiling water reactor licensees and applicants shall conduct testing to qualify the reactor coolant system relief and safety valves under expected operating conditions for design basis transients and accidents. The licensees and applicants shall determine the expected valve operating conditions through the use of analyses of accidents and anticipated operational occurrences referenced in Regulatory Guide 1.70, Revision 2. The single failures applied to these analyses shall be chosen so that the dynamic forces on the safety and relief valves are maximized. Test pressures shall be the highest predicted by conventional safety analysis procedures. Reactor coolant system relief and safety valve qualification shall include qualification of associated control circuitry piping and supports, as well as the valves themselves.

PVNGS Evaluation

PVNGS does not utilize pressure operated relief valves.

An analysis will be performed to determine the expected code safety valve operating conditions based upon the accidents and anticipated operational occurrences described in the PVNGS FSAR.

When this analysis is completed, generic code safety valve qualification tests will be performed, as necessary, to qualify the valve for expected operating conditions following an accident or anticipated operational occurrence. In addition, the discharge piping and supports will be analyzed for their expected operating conditions. Performance of qualification tests is dependent on the availability of test facilities capable of simulating the expected operating conditions.

The results of these analyses and tests will be provided prior to PVNGS Unit 1 Operating License.

2.1.3.a

Direct Indication of Power-Operated Relief Valve and Safety Valve Position for PWR's and BWR's

2.1.3 INFORMATION TO AID OPERATORS IN ACCIDENT DIAGNOSIS AND CONTROL

2.1.3.a DIRECT INDICATION OF POWER-OPERATED RELIEF VALVE AND SAFETY VALVE POSITION FOR PWRs AND BWRs

NUREG-0578 Position

Reactor system relief and safety valves shall be provided with a positive indication in the control room derived from a reliable valve position detection device or a reliable indication of flow in the discharge pipe.

PVNGS Evaluation

PVNGS does not utilize power operated relief valves.

The PVNGS pressurizer code safety valves are headered into the reactor drain tank (RDT), inside containment. Upstream of the common header each code safety valve is monitored for seat leakage by an in-line RTD (refer to Figure 2.1.11-2). Indirect indication of code safety valve operation is provided by RDT pressure, pressurizer pressure and pressurizer level instrumentation.

An evaluation will be performed to determine if the multiple indirect indications of code safety valve status provided in the PVNGS design provide unambiguous indication that a small break area LOCA is in progress.

If the evaluation determines that direct valve status indication in the control room is required (e.g. by acoustic techniques, flow measurement or valve position indication), it will be incorporated in the PVNGS design prior to Unit 1 Operating License.

Results of this evaluation will be provided by January 1980.

2.1.3.b

Instrumentation for Detection of Inadequate Core Cooling in PWR's and BWR's

2.1.3 INFORMATION TO AID OPERATORS IN DIAGNOSIS AND CONTROL

2.1.3.b INSTRUMENTATION FOR DETECTION OF INADEQUATE CORE COOLING IN PWRs AND BWRs.

NUREG-0578 Position

1. Licensees shall develop procedures to be used by the operator to recognize inadequate core cooling with currently available instrumentation. The licensee shall provide a description of the existing instrumentation for the operators to use to recognize these conditions. A detailed description of the analysis needed to form the basis for operator training and procedure development shall be provided pursuant to another short-term requirement, "Analysis of Off-Normal Conditions, Including Natural Circulation".

   In addition, each PWR shall install a primary coolant saturation meter to provide on-line indication of coolant saturation condition. Operator instruction as to use of this meter shall include consideration that is not to be used exclusive of other related plant parameters.

2. Licensees shall provide a description of any additional instrumentation or controls (primary or backup) proposed for the plant to supplement those devices cited in the preceding section giving an unambiguous, easy-to-interpret indication of inadequate core cooling. A description of the functional design requirements for the system shall also be included. A description of the procedures to be used with the proposed equipment, the analysis used in developing these procedures, and a schedule for installing the equipment shall be provided.

PVNGS Evaluation

Information to diagnose inadequate core cooling is as follows:

1. Prior to PVNGS Unit 1 Operating License, procedures will be developed to aid the operator in recognition of inadequate core cooling. These procedures will utilize existing redundant safety related instrumentation such as:

A.	Pressurizer Pressure	1500-2500 psia
B.	Pressurizer Pressure	0-3000 psia
C.	Pressurizer Level	0-100%
D.	Coolant Temperature	
	- Hot Leg	375-675F
	- Cold Leg	465-615F

These procedures will be based upon analyses performed as discussed in Section 2.1.9. Redundant subcooling meters will be installed prior to PVNGS Unit 1 Operating License to provide additional indication of primary coolant saturation condition. The procedures discussed in Item 1 will incorporate the use of primary coolant saturation indication.

2. Upon completion of the analyses described in Section 2.1.9, an evaluation will be performed to determine the need, if any, for additional instrumentation, such as reactor vessel level indication. Any instrumentation determined to be necessary will be installed prior to PVNGS Unit 1 Operating License.

2.1.4 CONTAINMENT ISOLATION PROVISIONS FOR PWRs AND BWRs

NUREG-0578 Position

1. All containment isolation system designs shall comply with the recommendations of SRP 6.2.4; i.e., that there be diversity in the parameters sensed for the initation of containment isolation.
2. All plants shall give careful reconsideration to the definition of essential and non-essential systems, shall identify each system determined to be essential, shall identify each system determined to be non-essential, shall describe the basis for selection of each essential system, shall modify their containment isolation designs accordingly, and shall report the results of the re-evaluation to the NRC.
3. All non-essential systems shall be automatically isolated by the containment isolation signal.
4. The design of control systems for automatic containment isolation valves shall be such that resetting the isolation signal will not result in the automatic re-opening of containment isolation valves. Reopening of containment isolation valves shall require deliberate operator action.

PVNGS Evaluation

The PVNGS containment isolation system is designed as follows:

1. As required by SRP 6.2.4, a containment isolation signal is diversely generated by either a high containment pressure signal (5 psig) or a low pressurizer pressure signal (1600 psig). These parameters additionally generate a safety injection actuation signal. The power access purge is additionally isolated by high containment purge radioactivity.

2. A review of the PVNGS containment isolation system will be performed to determine that no essential systems are automatically isolated by a containment isolation actuation signal(CIAS). Essential systems will be selectively isolated by the operator after their use is no longer required.

   The results of this review will be provided to the NRC staff by January 1980. Plant modifications, if any, will be performed prior to PVNGS Unit 1 Operating License.

3. All non-essential systems penetrating the PVNGS containment are isolated by CIAS.

4. Resetting of a CIAS does not result in the automatic opening of containment isolation valves. Re-opening requires operator action for each valve.

2.1.5.a

Dedicated Penetrations for External Recombiners or Post-Accident Purge Systems

2.1.5 POST ACCIDENT HYDROGEN CONTROL SYSTEMS FOR PWR AND BWR CONTAINMENTS

2.1.5.a DEDICATED PENETRATIONS FOR EXTERNAL RECOMBINER OR POST-ACCIDENT EXTERNAL PURGE SYSTEM

NUREG-0578 Position

Plants using external recombiners or purge systems for post-accident combustible gas control of the containment atmosphere should provide containment isolation systems for external recombiner or purge systems that are dedicated to that service only, that meet the redundancy and single failure requirements of General Design Criteria 54 and 56 of Appendix A to 10 CFR Part 50, and that are sized to satisfy the flow requirements of the recombiner or purge system.

PVNGS Evaluation

Combustible gas concentration in the PVNGS containment building is maintained by the Containment Hydrogen Control System.

The PVNGS Containment Hydrogen Control System (refer to Figure 2.1.5-1) shares no equipment or penetrations with the normal containment purge system and includes:

1. Two redundant and independent hydrogen gas analyzers with separate piping, valves, controls and instrumentations (refer to Section 2.1.10).

2. Redundant and independent mobile, hydrogen recombiners (two for the PVNGS site) with separate supply and return lines, utilizing separate penetrations for each line.

3. Redundant and independent supply and return line isolation valving (one valve inside containment and one outside containment) that meets the requirements of 10 CFR 50, Appendix A, Criterion 54 and 56.

4. Dedicated containment penetrations sized for maximum recombiner flow requirements.

The PVNGS Containment Hydrogen Control System, as currently designed, provides dedicated penetrations and isolation systems that meet redundancy and single failure requirements as recommended by NUREG-0578, July 1979.

2.1.5.b

Inerting BWR Containments

2.1.5 POST ACCIDENT HYDROGEN CONTROL SYSTEMS FOR PWR AND BWR CONTAINMENTS

2.1.5.b INERTING BWR CONTAINMENTS

NUREG-0578 Position

It shall be required that the Vermont Yankee and Hatch 2 Mark I BWR containments be inerted in a manner similar to other operating BWR plants. Inerting shall also be required for near term OL licensing of Mark I and Mark II BWRs.

PVNGS Evaluation

PVNGS utilizes Combustion Engineering, Inc. System 80^{tm} PWRs with a containment with 2.6×10^6 ft^3 net free volume. Inerting of the PVNGS containment is not required.

2.1.5.c

Capability to Install Hydrogen Recombiner at each Light Water Nuclear Power Plant

2.1.5. POST ACCIDENT HYDROGEN CONTROL SYSTEMS FOR PWR AND BWR CONTAINMENTS

2.1.5.c CAPABILITY TO INSTALL HYDROGEN RECOMBINER AT EACH LIGHT WATER NUCLEAR POWER PLANT

NUREG-0578 Position (Minority View)

1. All licensees of light water reactor plants shall have the capability to obtain and install recombiners in their plants within a few days following an accident if containment access is impaired and if such a system is needed for long-term post-accident combustible gas control.
2. The procedures and bases upon which the recombiners would be used on all plants should be the subject of a review by the licensees in considering shielding requirements and personnel exposure limitations as demonstrated to be necessary in the case of TMI-2.

PVNGS Evaluation

The PVNGS hydrogen recombiners are designed as follows:

1. PVNGS will have available, onsite, two mobile hydrogen recombiners designed to limit the concentration of hydrogen in containment. These hydrogen recombiners are capable of being installed in the affected unit within 24 hours following an accident.

2. Installation procedures for the hydrogen recombiners will be developed and shielding requirements re-analyzed prior to PVNGS Unit 1 Operating License.

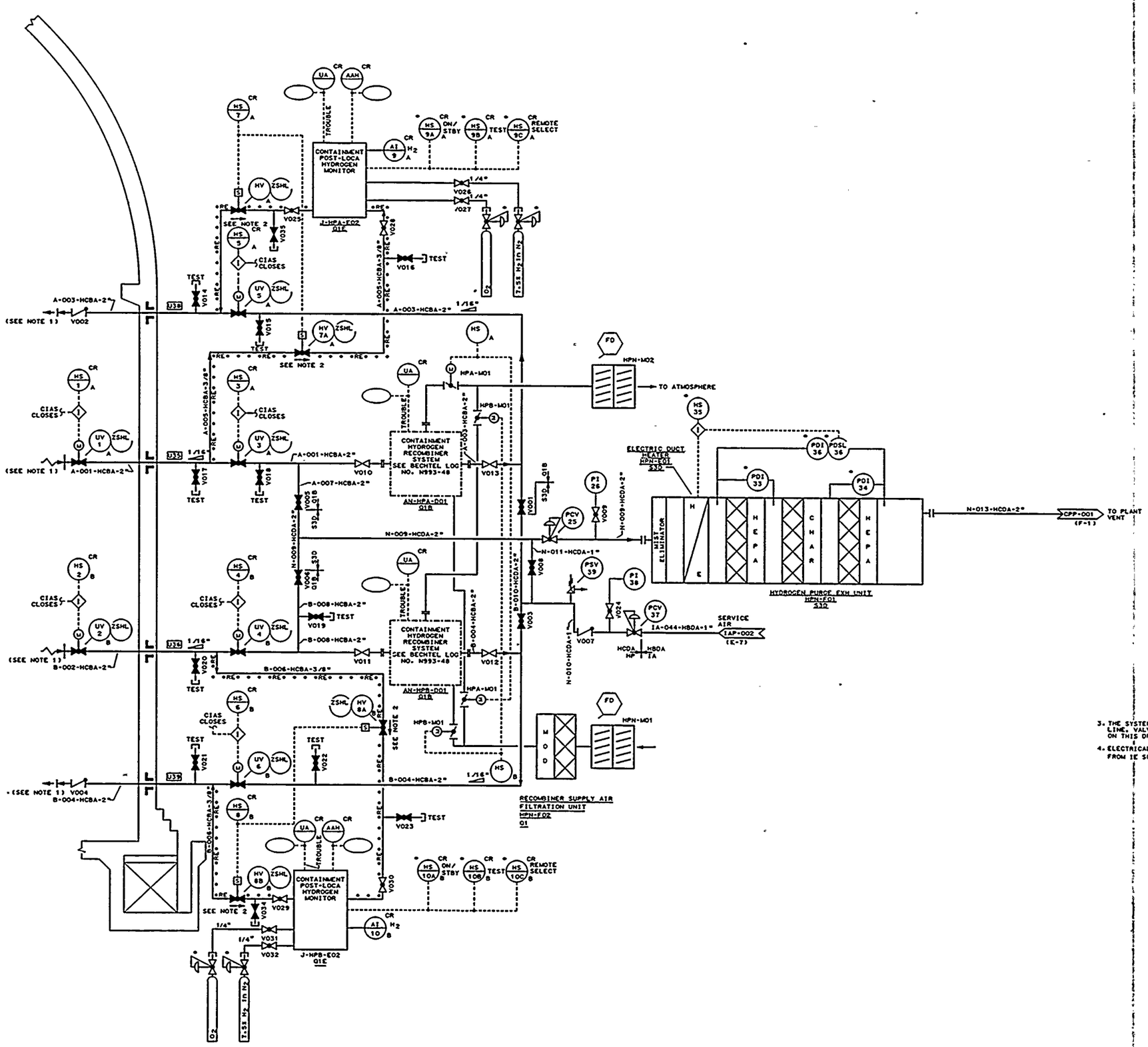

3. THE SYSTEM DESIGNATOR HP IS TO PRECEDE ALL LINE, VALVE, AND INSTRUMENT NUMBERS SHOWN ON THIS DRAWING UNLESS OTHERWISE INDICATED.
4. ELECTRICAL HEAT TRACING SHALL BE POWERED FROM 1E SOURCE OF POWER.

NOTES:
1. INSTALL VALVES WITH FLOW DIRECTION ARROW IN DIRECTION NOTED TO CLOSE AGAINST CONTAINMENT DESIGN PRESSURE.
2. PIPE SHALL BE THREADED TO ACCEPT A 2" X 1" CAPPED TEST REDUCER AS SHOWN BELOW.

DURING NORMAL OPERATION WHEN END OF PIPE IS OPEN, PROVIDE SCREW COUPLINGS FOR PROTECTION OF THE THREAD.

13-M-HPP-001 REV 3

Palo Verde Nuclear Generating Station

COMBUSTIBLE GAS CONTROL SYSTEM

Figure 2.1.5-1

2.1.6.a

Integrity of Systems Outside Containment Likely to Contain Radioactive Materials (Engineered Safety Systems and Auxiliary Systems) for PWR's and BWR's

2.1.6 POST ACCIDENT CONTROL OF RADIATION IN SYSTEMS OUTSIDE CONTAINMENT OF PWRs AND BWRs

2.1.6.a INTEGRITY OF SYSTEMS OUTSIDE CONTAINMENT LIKELY TO CONTAIN RADIOACTIVE MATERIALS (ENGINEERED SAFETY SYSTEMS AND AUXILIARY SYSTEMS) FOR PWRs AND BWRs

NUREG-0578 Position

Applicants and licensees shall immediately implement a program to reduce leakage from systems outside containment that would or could contain highly radioactive fluids during a serious transient or accident to as-low-as-practical levels. This program shall include the following:

1. Immediate Leak Reduction

   a. Implement all practical leak reduction measures for all systems that could carry radioactive fluids outside of containment.

   b. Measure actual leakage rates with system in operation and report them to the NRC.

2. Continuing Leak Reduction

   Establish and implement a program of preventive maintenance to reduce leakage to as-low-as-practical levels in systems outside containment likely to contain highly radioactive fluid during a serious transient or accident.

PVNGS Evaluation

The PVNGS program of preventive maintenance will reduce leakage to as low as practical. The program will include:

1. In-service inspection of ASME Class 2 and 3 systems in accordance with AMSE Boiler and Pressure Vessel Code Section XI, including pressure tests.

2. Alarming of abnormal airborne radioactivity levels by the radiation monitoring system for gaseous radwaste system leakage.

3. Routine monitoring of plant components.

Undesirable leakage identified during tests or inspections will be reduced to a level as low as is practical.

2.1.6.b

Design Review of Plant Shielding & Environmental Qualification of Equipment for Spaces/Systems Which May be Used in Post-Accident Operations

2.1.6 POST ACCIDENT CONTROL OF RADIATION IN SYSTEMS OUTSIDE CONTAINMENT OF PWRs AND BWRs

2.1.6.b DESIGN REVIEW OF PLANT SHIELDING AND ENVIRONMENTAL QUALIFICATION OF EQUIPMENT FOR SPACES/SYSTEMS WHICH MAY BE USED IN OPERATIONS

NUREG-0578 Position

With the assumption of a post-accident release of radioactivity equivalent to that described in Regulatory Guides 1.3 and 1.4 (i.e., the equivalent of 50% of the core radioiodine and 100% of the core noble gas inventory are contained in the primary coolant), each licensee shall perform a radiation and shielding design review of the spaces around systems that may, as a result of an accident, contain highly radioactive materials. The design review should identify the location of vital areas and equipment, such as the control room, radwaste control stations, emergency power supplies, motor control centers, and instrument areas, in which personnel occupancy may be unduly limited or safety equipment may be unduly degraded by the radiation fields during post-accident operations of these systems.

Each licensee shall provide for adequate access to vital areas and protection of safety equipment by design changes, increased permanent or temporary shielding, or post-accident procedural controls. The design review shall determine which types of corrective actions are needed for vital areas throughout the facility.

PVNGS Evaluation

As part of the PVNGS design process, shielding in areas requiring personnel access for accident mitigation is designed such that access is not unduly limited. In addition, safety related equipment is qualified for the maximum expected equipment life dose.

An analysis of the PVNGS shielding design criteria, now based on ALARA, will be performed to determine if the results of TMI invalidate a y of the PVNGS shielding criteria. If, as a result of this analysis, the shielding design criteria in a plant area requires modification, the shielding in that area will be redesigned based on revised criteria. Any increase in permanent or temporary shielding, redesign or procedural control determined to be necessary will be completed prior to PVNGS Unit 1 Operating License. Refer to Section 2.1.8.a for a discussion of sampling system shielding.

2.1.7.a

Automatic Initiation of the Auxiliary Feedwater System for PWR's

2.1.7 IMPROVED AUXILIARY FEEDWATER SYSTEM RELIABILITY FOR PWRs

2.1.7.a AUTOMATIC INITIATION OF THE AUXILIARY FEEDWATER SYSTEM FOR PWRs

NUREG-0578 Position

Consistent with satisfying the requirements of General Design Criterion 20 of Appendix A to 10 CFR Part 50 with respect to the timely initiation of the auxiliary feedwater system, the following requirements shall be implemented in the short term:

1. The design shall provide for the automatic initiation of the auxiliary feedwater system.

2. The automatic initiation signals and circuits shall be designed so that a single failure will not result in the loss of auxiliary feedwater system function.

3. Testability of the initiating signals and circuits shall be a feature of the design.

4. The initiating signals and circuits shall be powered from the emergency buses.

5. Manual capability to initiate the axuiliary feedwater system from the control room shall be retained and shall be implemented so that a single failure in the manual circuits will not result in the loss of system function.

6. The AC motor-driven pumps and valves in the auxiliary feedwater system shall be included in the automatic actuation (simultaneous and/or sequential) of the loads to the emergency buses.

7. The automatic initiating signals and circuits shall be designed so that their failure will not result in the loss of manual capability to initiate the AFWS from the control room.

8. In the long term, the automatic initiation signals and circuits shall be upgraded in accordance with safety-grade requirements.

PVNGS Evaluation

1. The Auxiliary Feedwater System shown in Figure 2.1.7-1 consists of two Seismic Category I pumps and their associated valves and one non-Seismic Category I pump and its associated valves.

   The Seismic Category I portion of the auxiliary feedwater system is provided to automatically initiate residual heat removal capability during emergency conditions, such as a steam line rupture, loss of normal feedwater, or loss of offsite and normal onsite power.

The Seismic Category I portion of the auxiliary feedwater system is automatically actuated by an Auxiliary Feedwater Actuation Signal (AFAS) from the Engineered Safety Features Actuation System (ESFAS). The AFAS is initiated for each steam generator by a low steam generator level coincident with a "not ruptured" calculated signal for that steam generator (refer to Figure 2.1.7-2).

The AFAS logic determines whether a steam generator is not intact in the event of a secondary system break by sensing:

- The steam generator has initiated a low water level trip.
- The steam generator pressure is less than the other by a predetermined value.
- The other steam generator has been calculated as not being ruptured.

The non-Seismic Category I portion of the auxiliary feedwater system is provided for normal non-emergency operation during startup, cooldown, and hot standby.

2. The Seismic Category I portion of the auxiliary feedwater system is composed of components in two separate and diverse load groups (i.e., load group 1 and load group 2. Each of the four auxiliary feedwater valves associated with each steam generator is automatically actuated in such a manner that no single failure can prevent either the supply of auxiliary feedwater to an intact steam generator or the

isolation of auxiliary feedwater from a ruptured steam generator. Load group 2 powers the Seismic Category I motor-driven auxiliary feedwater pump and its associated valves and controls. Load group 1 supplies dc power to the steam-driven turbine controls and the valves associated with the turbine-driven auxiliary feedwater pump. No ac power is required for support of the turbine-driven auxiliary feedwater train. The instrumentation and controls of the components and equipment in load group 1 are physically and electrically separate and independent of the instrumentation and controls of the components and equipment in load group 2. This separation is maintained such that both trains are not terminated on common logic circuits.

3. Provisions are made to permit periodic testing of the auxiliary feedwater initiation signals and circuitry. These tests cover the trip actions from sensor input through the protection system and actuation devices. The system test does not interfere with the system protective function. The testing system meets the criteria of IEEE-338-1971, "IEEE Trial-Use Criteria for the Periodic Testing of Nuclear Power Generating Station Protective Systems," and Regulatory Guide 1.22,

"Periodic Testing of Protection System Actuator Functions." Testing is performed in accordance with the surveillance test requirements of the PVNGS Technical Specifications.

4. AFAS circuits are a part of the Engineered Safety Features Systems. The initiating signals and circuits are powered from Class IE buses in separate load groups as discussed in Item 2. The initiating sensors are powered from separate and redundant Class IE nuclear instrumentation and control panels, each of which is supplied by either offsite power or the diesel generators when offsite power is not available and is backed up by Class IE batteries.

5. Manual initiation capability for each auxiliary feedwater train exists in the control room. Control of individual auxiliary feedwater system components is also available in the control room. No single failure in the manual initiation portion of the circuit can result in the loss of auxiliary feedwater system function.

6. The Seismic Category I AC motor-driven pump and power operated valves in its train are automatically and sequentially loaded on the diesel generator bus upon loss of offsite power.

7. Failure of the AFAS will not result in the loss of manual capability to control auxiliary feedwater system components from the control room.

8. AFAS circuits are Class IE as presently designed.

The PVNGS auxiliary feedwater system, as presently designed, complies with the recommendations of NUREG-0578, July 1979.

2.1.7.b

Auxiliary Feedwater Flow Indication to Steam Generators for PWR's

2.1.7 IMPROVED AUXILIARY FEEDWATER SYSTEM RELIABILITY FOR PWRs

2.1.7.b AUXILIARY FEEDWATER FLOW INDICATION TO STEAM GENERATOR FOR PWRs

NUREG-0578 Position

Consistent with satisfying the requirements set forth in GDC 13 to provide the capability in the control room to ascertain the actual performance of the AFWS when it is called to perform its intended function, the following requirements shall be implemented:

1. Safety-grade indication of auxiliary feedwater flow to each steam generator shall be provided in the control room.

2. The auxiliary feedwater flow instrument channels shall be powered from the emergency buses consistent with satisfying the emergency power diversity requirements of the auxiliary feedwater system set forth in Auxiliary Systems Branch Technical Position 10-1 of the Standard Review Plan, Section 10.4.9.

PVNGS Evaluation

1. Monitoring of both trains of auxiliary feedwater flow is provided at PVNGS. These flow indicator channels are made from highly reliable non-Class IE components and are displayed on the

main control boards. Class IE (safety grade) pressure indicators located upstream of the manual block valves are also provided. Pressure indicator PI-18A and flow indicator FI-40 monitor flow from the train A turbine-driven auxiliary feedwater pump (refer to Figure 2.1.7-1). Pressure indicator PI-17A and flow indicator FI-41 monitor the flow from the train B motor-driven auxiliary feedwater pump.

2. The safety grade pressure indication channels are powered from their associated trains redundant Class IE buses.. The instrument bus powering the auxiliary feedwater flow instrumentation is normally powered from a non-Class IE 480 V motor control center (MCC). Upon loss of this MCC the instrument bus is automatically transferred to a Class IE MCC via a Class IE isolation transformer. This Class IE MCC is powered from offsite power or from its diesel generator when offsite power is not available.

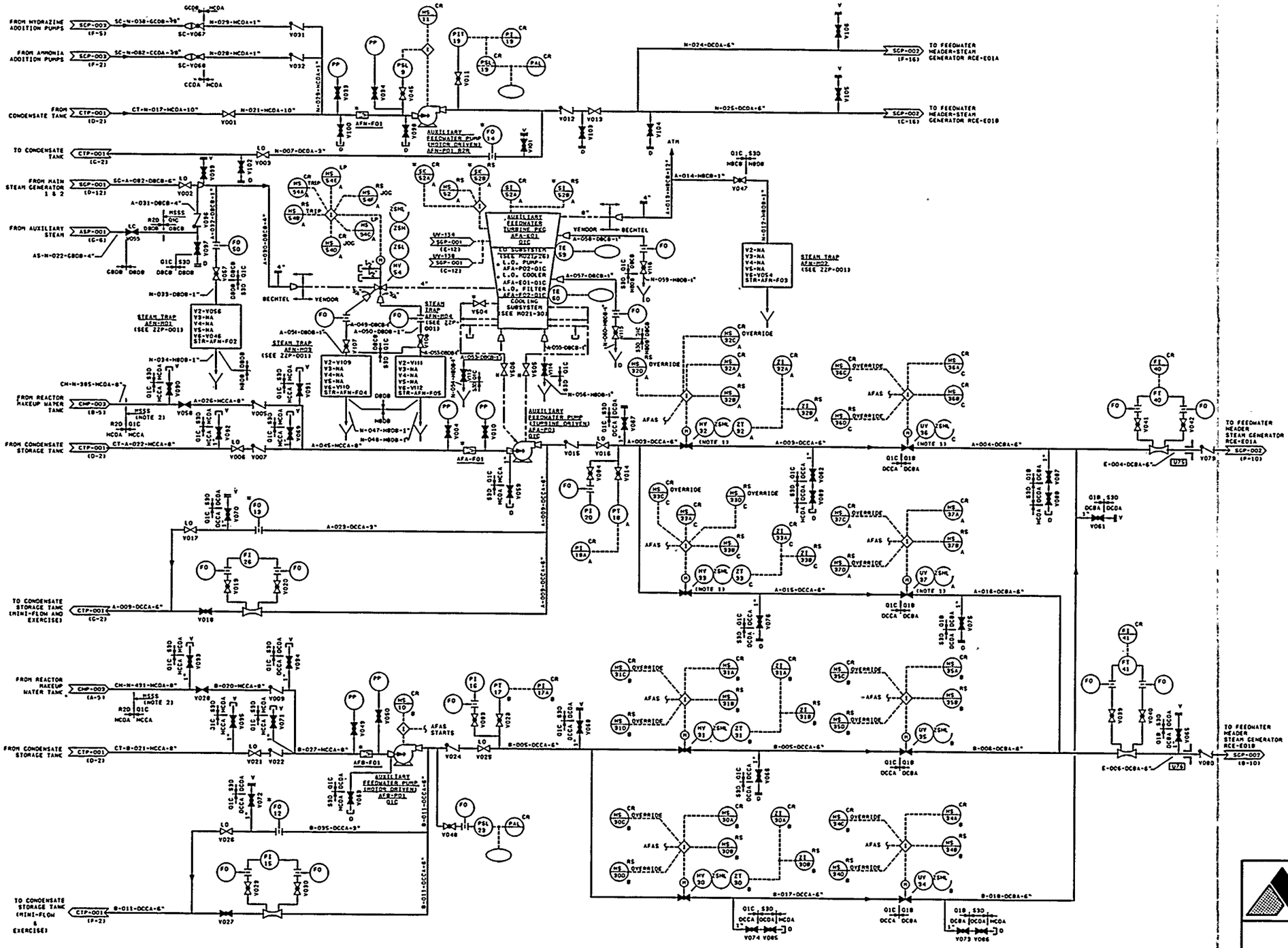

NOTES:

1. VALVE HAS 125 VDC MOTOR ACTUATOR.
2. LINE IS 01C TO FIRST FIELD WELD OUTSIDE MAIN STEAM SUPPORT STRUCTURE.

THE SYSTEM DESIGNATOR AF IS TO PRECEDE ALL LINE, VALVE AND INSTRUMENT NUMBERS SHOWN ON THIS DRAWING UNLESS OTHERWISE INDICATED.

13-M-AFP-001 REV 5

Palo Verde Nuclear Generating Station

AUXILIARY FEEDWATER SYSTEM

Figure 2.1.7-1

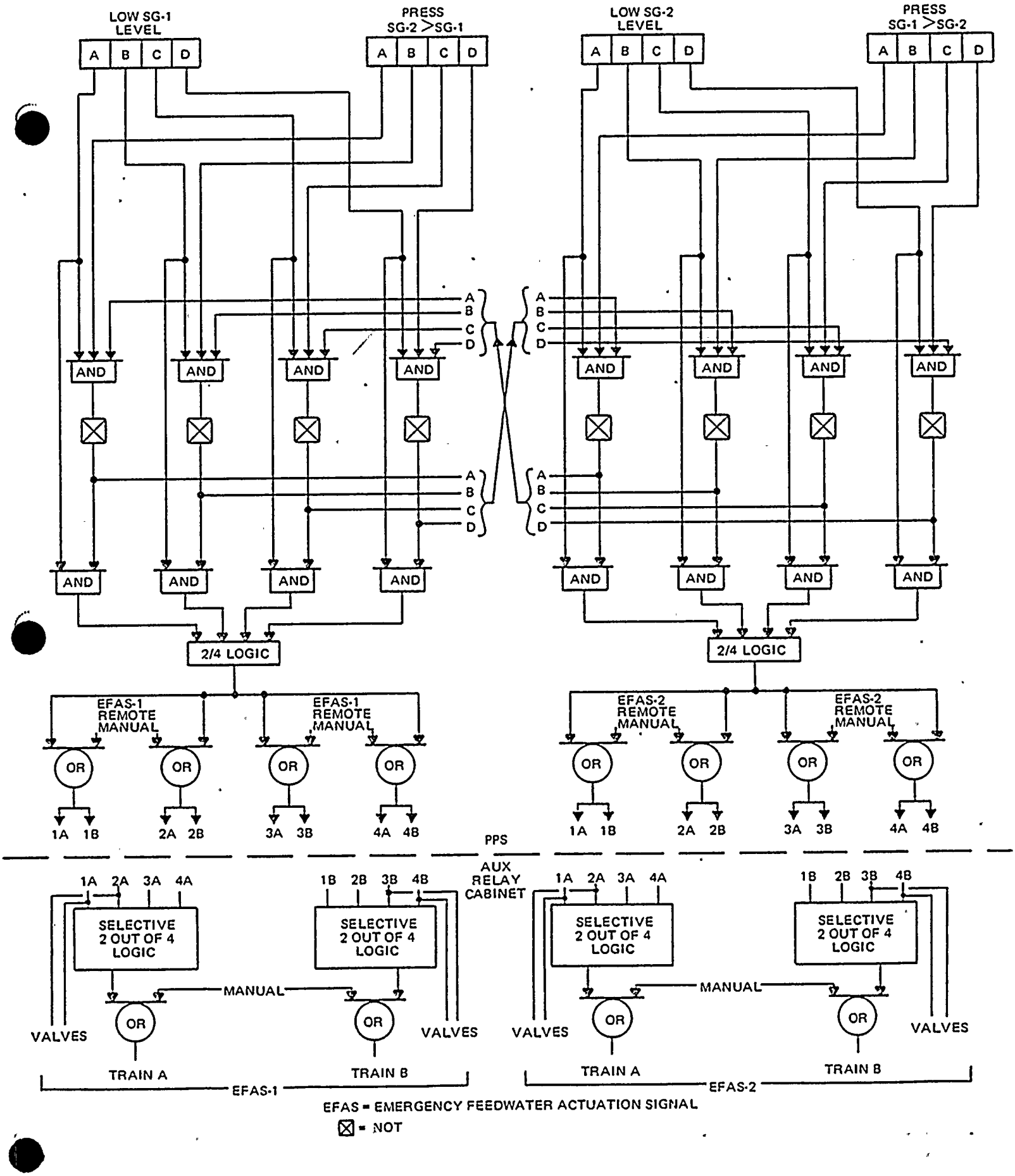

C-E SYSTEM 80	ESFAS SIGNAL LOGIC (EFAS 1, EFAS 2)	Figure 2.1.7-2

2.1.8.a

Improved Post-Accident Sampling Capability

2.1.8 INSTRUMENTATION TO FOLLOW THE COURSE OF AN ACCIDENT

2.1.8.a IMPROVED POST-ACCIDENT SAMPLING CAPABILITY

NUREG-0578 Position

A design and operational review of the reactor coolant and containment atmosphere sampling systems shall be performed to determine the capability of personnel to promptly obtain (less than 1 hour) a sample under accident conditions without incurring a radiation exposure to any individual in excess of 3 and 18 3/4 Rems to the whole body or extremities, respectively. Accident conditions should assume a Regulatory Guide 1.3 or 1.4 release of fission products. If the review indicates that personnel could not promptly and safely obtain the samples, additional design features or shielding should be provided to meet the criteria.

A design and operational review of the radiological spectrum analysis facilities shall be performed to determine the capability to promptly quantify (less that 2 hours) certain radioisotopes that are indicators of the degree of core damage. Such radionuclides are noble gases (which indicate cladding failure), iodines and cesiums (which indicate high fuel temperatures), and non-volatile isotopes (which indicate fuel melting). The initial reactor coolant spectrum should correspond to a Regulatory Guide 1.3 or 1.4 release.

The review should also consider the effects of direct radiation from piping and components in the auxiliary building and possible contamination and direct radiation from airborne effluents. If the review indicates that the analyses required cannot be performed in a prompt manner with existing equipment, then design modifications or equipment procurement shall be undertaken to meet the criteria.

In addition to the radiological analyses, certain chemical analyses are necessary for monitoring reactor conditions. Procedures shall be provided to perform boron and chloride chemical analyses assuming a highly radioactive initial sample (Regulatory Guide 1.3 or 1.4 source term). Both analyses shall be capable of being completed promptly; i.e., the boron sample analysis within an hour and the chloride sample analysis within a shift.

PVNGS Evaluation

An analysis of the design and operation of the reactor coolant and containment atmosphere sampling systems will be performed to ensure that samples can be obtained promptly (less than 1 hour) during accident conditions without exposure to any individual to greater than 3 and 18-3/4 Rems to the whole body or extremities, respectively. Any design or procedural changes will be implemented prior to PVNGS Unit 1 Operating License.

An analysis of PVNGS spectrum analysis facilities will be performed to ensure that the design allows prompt quantification (less than 2 hours) of previously prepared radioisotope samples that may be indicative of core damage. The assumed reactor coolant spectrum will correspond to a Regulatory Guide 1.3 or 1.4 release.

PVNGS chemical analysis facilities will be designed to allow prompt analysis of boron concentration (less than 1 hour) and chloride concentration (less than 8 hours) assuming a radioactive sample corresponding to a Regulatory Guide 1.3 or 1.4 release.

2.1.8.b

Increased Range of Radiation Monitors

2.1.8 INSTRUMENTATION TO FOLLOW THE COURSE OF AN ACCIDENT

2.1.8.b INCREASED RANGE OF RADIATION MONITORS

NUREG-0578 Position

The requirements associated with this recommendation should be considered as advanced implementation of certain requirements to be included in a revision to Regulatory Guide 1.97, "Instrumentation to Follow the Course of an Accident," which has already been initiated, and in other Regulatory Guides, which will be promulgated in the near-term.

1. Noble gas effluent monitors shall be installed with an extended range designed to function during accident conditions as well as during normal operating conditions; multiple monitors are considered to be necessary to cover the ranges of interest.

   a. Noble gas effluent monitors with an upper range capacity of 10^5 μCi/cc (Xe-133) are considered to be practical and should be installed in all operating plants.

   b. Noble gas effluent monitoring shall be provided for the total range of concentration extending from normal condition (ALARA) concentrations to a maximum of 10^5 μCi/cc (Xe-133). Multiple monitors are considered to be necessary to cover the ranges of interest. The range capacity of individual monitors should overlap by a factor of ten.

2. Since iodine gaseous effluent monitors for the accident condition are not considered to be practical at this time, capability for effluent monitoring of radioiodines for the accident condition shall be provided with sampling conducted by adsorption on charcoal or other media, followed by onsite laboratory analysis.

3. In-containment radiation level monitors with a maximum range of 10^8 rad/hr shall be installed. A minimum of two such monitors that are physically separated shall be provided. Monitors shall be designed and qualified to function in an accident environment.

PVNGS Evaluation

The PVNGS radiation monitoring system is a follows;

1. Noble gas effluent monitoring of the plant vent is presently designed to have an upper limit of 10^{-1} μCi/cc (Xe-133). Additional monitors will be added with an upper range of 10^4 μCi/cc (Xe-133). The range of the plant vent monitors shall overlap by at least a factor of ten.

2. Post-accident effluent monitoring of radioiodines is provided for by sampling of plant vent iodine monitor adsorption media followed by onsite laboratory analysis. Procedures for this sampling will be developed prior to Unit 1 Operating License.

3. The PVNGS power access purge monitors (two redundant, ESF monitors) are located around the power access purge duct adjacent to the containment. These monitors are capable of monitoring the purge duct during normal operation and the containment (through the containment wall) subsequent to an accident. When monitoring the containment radiation level these monitors will have a maximum range of at least 10^6 rad/hr. The monitors will be qualified to post-accident condition.
The design of the monitors will be evaluated further to determine if a maximum range of 10^8 rad/hr is achievable. This evaluation will be completed by March, 1981.

2.1.8.c

Improved In-Plant Iodine Instrumentation

2.1.8 INSTRUMENTATION TO FOLLOW THE COURSE OF AN ACCIDENT

2.1.8.c IMPROVED IN-PLANT IODINE INSTRUMENTATION

NUREG-0578 Position

Each licensee shall provide equipment and associated training and procedures for accurately determining the airborne iodine concentration in areas within the facility where personnel may be present during an accident.

PVNGS Evaluation

Prior to PVNGS Unit 1 Operating License, procedures will be implemented for determination of airborne iodine concentration by sampling iodine monitor cartridges for spectrum analysis. These procedures will be used when the plant radiation monitoring system indicates iodine levels requiring the use of respiratory equipment.

Spectral analysis equipment is available at each PVNGS unit.

2.1.9 ANALYSIS OF DESIGN AND OFF-NORMAL TRANSIENTS AND ACCIDENTS

NUREG-0578 Position

Analyses, procedures, and training addressing the following are required:

1. Small break loss-of-coolant accidents;
2. Inadequate core cooling; and
3. Transients and accidents.

Some analysis requirements for small breaks have already been specified by the Bulletins and Orders Task Force. These should be completed. In addition, pretest calculations of some of the Loss of Fluid Test (LOFT) small break tests (scheduled to start in September 1979) shall be performed as means to verify the analyses performed in support of the small break emergency procedures and in support of an eventual long term verification of compliance with Appendix K of 10 CFR Part 50.

In the analysis of inadequate core cooling, the following conditions shall be analyzed using realistic (best-estimate) methods:

1. Low reactor coolant system inventory (two examples will be required - LOCA with forced flow, LOCA without forced flow).
2. Loss of natural circulation (due to loss of heat sink).

These calculations shall include the period of time during which inadequate core cooling is approached as well as the

period of time during which inadequate core cooling exists. The calculations shall be carried out in real time far enough that all important phenomena and instrument indications are included. Each case should then be repeated taking credit for correct operator action. These additional cases will provide the basis for developing appropriate emergency procedures. These calculations should also provide the analytical basis for the design of any additional instrumentation needed to provide operators with an unambiguous indication of vessel water level and core cooling adequacy.

The analyses of transients and accidents shall include the design basis events specified in Section 15 of each FSAR. The analyses shall include a single active failure for each system called upon to function for a particular event. Consequential failures shall also be considered. Failures of the operators to perform required control manipulations shall be given consideration for permutations of the analyses. Operator actions that could cause the complete loss of function of a safety system shall also be considered. At present, these analyses need not address passive failures or multiple system failures in the short term. In the recent analysis of small break LOCAs, complete loss of auxiliary feedwater was considered. The complete loss of auxiliary feedwater may be added to the failures being considered in the analysis of transients and accidents if it is concluded

that more is needed in operator training beyond the short-term actions to upgrade auxiliary feedwater system reliability. Similarly, in the long term, multiple failures and passive failures may be considered depending in part on staff review of the results of the short-term analyses.

The transient and accident analyses shall include event tree analyses, which are supplemented by computer calculations for those cases in which the system response to operator actions is unclear of these calculations could be used to provide important quantitative information not available from an event tree. For example, failure to initiate high-pressure injection could lead to core uncovery for some transients, and a computer calculation could provide information on the amount of time available for corrective action. Reactor simulators may provide some information in defining the event trees and would be useful in studying the information available to the operators. The transient and accident analyses are to be performed for the purpose of identifying appropriate and inappropriate operator actions relating to important safety considerations such as natural circulation, prevention of core uncovery, and prevention of more serious accidents.

The information derived from the preceding analyses shall be included in the plant emergency procedures and operator training. It is expected that analyses performed by the NSSS vendors will be put in the form of emergency procedure guidelines and that the changes in the procedures will be implemented by each licensee of applicant.

In addition to the analyses performed by the reactor vendors, analyses of selected transients should be performed by the NRC Office of Research, using the best available computer codes, to provide the basis for comparisons with the analytical methods being used by the reactor vendors. These comparisons together with comparisons to data, including LOFT small break test data, will constitute the short-term verification effort to assure the adequacy of the analytical methods being used to generate emergency procedures.

PVNGS Evaluation

Arizona Public Service Company will work with Combustion Engineering to determine the generic analyses necessary for the System 80 design. The analyses will be performed on a schedule consistent with development of procedures, training of operator's installation of hardware (refer to Section 2.1.3) prior to PVNGS Unit 1 Operating License.

2.1.10 INSTRUMENTATION TO MONITOR CONTAINMENT CONDITIONS DURING THE COURSE OF AN ACCIDENT

NUREG-0578 Position

Consistent with satisfying the requirements set forth in General Design Criterion 13 to provide the capability in the control room to ascertain containment conditions during the course of an accident, the following requirements shall be implemented:

1. A continuous indication of containment pressure shall be provided in the control room. Measurement and indication capability shall include three times the design pressure of the containment for concrete, four times the design pressure for steel, and minum five psig for all containments.
2. A continuous indication of hydrogen concentration in the containment atmosphere shall be provided in the control room. Measurement capability shall be provided over the range of 0 to 10% hydrogen concentration under both positive and negative ambient pressure.
3. A continuous indication of containment water level shall be provided in the control room for all plants. A narrow range instrument shall be provided for PWRs and cover the range from the bottom to the top of the containment sump. Also for PWRs, a wide range instrument shall be provided and cover the range

from the bottom of the containment to the elevation equivalent to a 500,000 gallon capacity. For BWRs, a wide range instrument shall be provided and cover the range from the bottom to 5 feet above the normal water level of the suppression pool.

The containment pressure, hydrogen concentration and wide range containment water level measurements shall meet the design and qualification provisions of Regulatory Guide 1.97, including qualification, redundancy, and testibility. The narrow range containment water level measurement instrumentations shall be qualified to meet the requirements of Regulatory Guide 1.89 and shall be capable of being periodically tested.

PVNGS Evaluation

PVNGS containment monitoring instrumentation is as follows:

1. Eight, Class IE containment pressure indicators are provided in the control room. Four indicators have a -4 to 20 psig range. The other four indicators have a -4 to 85 psig range.

   An analysis performed for the containment maximum negative pressure (refer to FSAR Section 6.2.1.1.3.6) demonstrates a maximum credible negative pressure of -2.6 psig. The existing pressure indicator range (to -4 psig) is, therefore, considered adequate to measure containment negative pressure under any postulated conditions.

The containment is designed for 60 psig internal pressure and tested to 69 psig. The maximum calculated containment pressure under accident conditions is 49.2 psig. The existing pressure indicator range (to 85 psig) provides a 40% margin above the containment design pressure and a 70% margin above the conservatively calculated peak pressure. Therefore, a containment pressure range greater than the existing 85 psig maximum is not considered to be necessary.

The addition of monitors with a range to 180 psig would add unnecessary confusion to the available containment pressure instrumentation by:

a. Displaying at only 25% of span during the worst postulated accident.

b. Displaying containment pressure with an accuracy of only $\pm$3.6 psi ($\pm$2%).

2. A continuous indication of hydrogen concentration is available in the control room. Two Class IE redundant monitors are presently provided with a range of 0-10%. The hydrogen monitors are manually initiated following a LOCA. Once initiated, they provide a continuous measurement of hydrogen concentration (refer to Figure 2.1.5-1).

3. Continuous indication of containment water level will be provided for PVNGS. An evaluation will be performed to determine the design requirements for this instrumentation. The results of this evaluation will be presented to the NRC staff by March, 1981.

2.1.11 INSTALLATION OF REMOTELY OPERATED HIGH POINT VENTS IN THE REACTOR COOLANT SYSTEM

NUREG-0578 Position

Each applicant and licensee shall install reactor coolant system and reactor vessel head high point vents remotely operated from the control room. Since these vents form a part of the reactor coolant pressure boundary, the design of the vents shall conform to the requirements of Appendix A to 10 CFR Part 50 General Design Criteria. In particular, these vents shall be safety grade, and shall satisfy the single failure criterion and the requirements of IEEE-279 in order to ensure a low probability of inadvertent actuation.

Each applicant and licensee shall provide the following information concerning the design and operation of these high point vents:

1. A description of the construction, location, size, and power supply for the vents, along with results of analyses of loss-of-coolant accidents initiated by a break in the vent pipe. The results of the analyses should be demonstrated to be acceptable in accordance with the acceptance criteria of 10 CFR 50.46.

2. Analyses demonstrating that the direct venting of non-condensable gases with perhaps high hydrogen concentrations does not result in violation of combustible gas concentration limits in containment as described in 10 CFR Part 50.44, Regulatory Guide 1.7 (Rev. 1), and Standard Review Plan Section 6.2.5.

3. Procedural guidelines for the operators' use of the vents. The information available to the operator for initiating or terminating vent usage shall be discussed.

PVNGS Evaluation

PVNGS will utilize existing penetrations on the pressurizer and reactor vessel head to provide high point venting of the Reactor Coolant System (RCS). Refer to Figure 2.1.11-1 for a schematic of the RCS. The pressurizer vent (refer to Figure 2.1.11-2) penetrates the top of the pressurizer and is currently utilized for steam space sampling. The reactor vessel head vent (refer to Figure 2.1.11-2) penetrates the top of the reactor vessel head and is currently piped to the Reactor Drain Tank (RDT), within containment, via a manual valve. Piping and valves will be provided to allow remote operation of the pressurizer and reactor vessel vents from the control room. In order to ensure a low probability of inadvertent action, valves and controls will satisfy the single failure criterion and IEEE-279-1971.

The following information will be supplied as the RCS Vent System design is finalized (prior to Unit 1 Operating License):

1. A description of the vents, piping, valves and controls utilized for the RCS Vent System. An analysis demonstrating the acceptability of a vent piping break in accordance with 10 CFR 50.46.

2. An analysis demonstrating that the venting of RCS non-condensable gases via the RCS Venting System does not result in containment hydrogen concentrations greater than those allowed by 10 CFR 50.44, Regulatory Guide 1.7, Revision 0 and Standard Review Plan 6.2.5.

3. Operating procedures for use of the RCS Vent System.

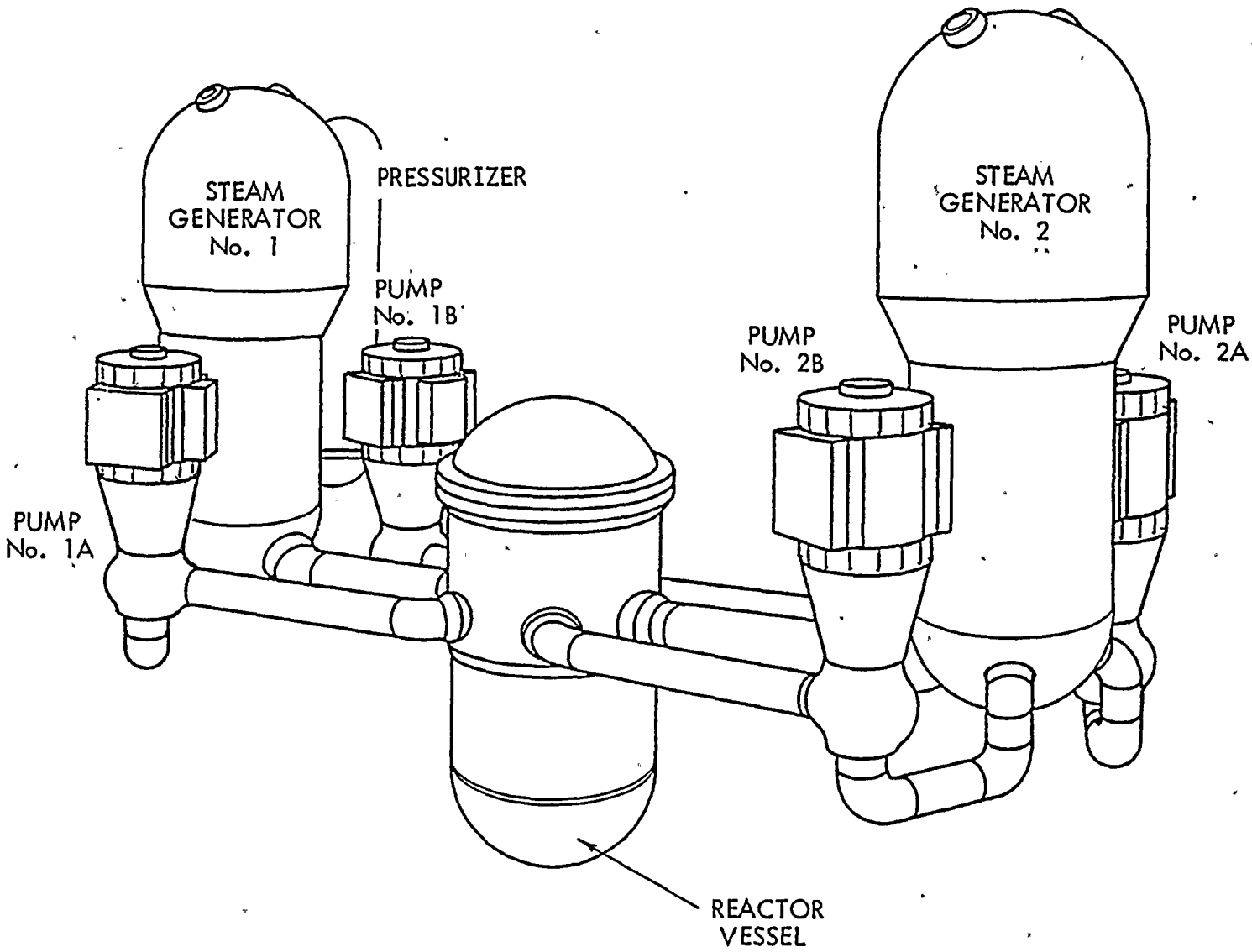

C-E SYSTEM 80	ISOMETRIC VIEW OF THE REACTOR COOLANT SYSTEM	Figure 2.1.11-1

2.2.1.a

Shift Supervisor's Responsibilities

2.2.1 IMPROVED REACTOR OPERATIONS COMMAND FUNCTION

2.2.1.a SHIFT SUPERVISORS RESPONSIBILITIES

NUREG-0578 Position

1. The highest level of corporate management of each licensee shall issue and periodically reissue a management directive that emphasizes the primary management responsibility of the shift supervisor for safe operation of the plant under all conditions on his shift and that clearly establishes his command duties.

2. Plant procedures shall be reviewed to assure that the duties, responsibilities, and authority of the shift supervisor and control room operators are properly defined to effect the establishment of a definite line of command and clear delineation of the command decision authority of the shift supervisor in the control room relative to other plant management personnel. Particular emphasis shall be placed on the following:

    a. The responsibility and authority of the shift supervisor shall be to maintain the broadest perspective of operational conditions affecting

the safety of the plant as a matter of highest priority at all times when on duty in the control room. The idea shall be reinforced that the shift supervisor should not become totally involved in any single operation in times of emergency when multiple operations are required in the control room.

b. The shift supervisor, until properly relieved, shall remain in the control room at all times during accident situations to direct the activities of control room operators. Persons authorized to relieve the shift supervisor shall be specified.

c. If the shift supervisor is temporarily absent from the control room during routine operations, a lead control room operator shall be designated to assume the control room command function. These temporary duties, responsibilities, and authority shall be clearly specified.

3. Training programs for shift supervisors shall emphasize and reinforce the responsibility for safe operation and the management function the shift supervisor is to provide for assuring safety.

PVNGS Evaluation

The responsibilities and authority of the Shift Supervisor is delineated in FSAR Chapter 13.1. In addition, the Station Manual and the Operating Department Program also prescribe responsibilities and authority of the Shift Supervisor.

The shift organization at PVNGS is such that the Shift Foreman will perform many of the administrative functions that are normally completed during a shift.

2.2.1.b

Shift Technical Advisor

2.2.1 IMPROVED REACTOR OPERATIONS COMMAND FUNCTION

2.2.1.b SHIFT TECHNICAL ADVISOR

NUREG-0578 Position

Each licensee shall provide an on-shift technical advisor to the shift supervisor. The shift technical advisor may serve more than one unit at a multi-unit site if qualified to perform the advisor function for the various units.

The shift technical advisor shall have a bachelor's degree or equivalent in a scientific or engineering discipline and have received spycific training in the response and analysis of the plant for transients and accidents. The shift technical advisor shall also receive training in plant design and layout, including the capabilities of instrumentation and controls in the control room. The licensee shall assign normal duties to the shift technical advisors that pertain to the engineering aspects of assuring safe operations of the plant, including the review and evaluation of operating experience.

PVNGS Evaluation

There is sufficient time prior to PVNGS Unit 1 Operating License to assess fully the alternatives for providing

additional technical and analytical capability for diagnosis of off-normal events. Two alternatives considered by the Lessons Learned Task Force have merit for PVNGS:

1. Upgrade the requirements for operators to include more engineering and plant response training.
2. Improve plant response diagnosis capabilities by backfit of computer and plant status display innovations.

The PVNGS Operator Training Program will be revised and upgraded to include more engineering and plant response training. The PVNGS Training Simulator will be used extensively to accomplish this objective.

The PVNGS design already has incorporated some advanced informational displays. These include the Safety Equipment Status Panels, computer-generated graphics displays and the various information displays which can be generated by the Core Monitoring Computer and the Plant Monitoring Computer.

2.2.1.c

Shift and Relief Turnover Procedures

2.2.1 IMPROVED REACTOR OPERATIONS COMMAND FUNCTION

2.2.1.c SHIFT RELIEF AND TURNOVER PROCEDURE

NUREG-0578 Position

The licensees shall review and revise as necessary the plant procedure for shift and relief turnover to assure the following:

1. A checklist shall be provided for the oncoming and offgoing control room operators and the oncoming shift supervisor to complete and sign. The following items, as a minimum, shall be included in the checklist:

   a. Assurance that critical plant parameters are within allowable limits (parameters and allowable limits shall be listed on the checklist).

   b. Assurance of the availability and proper alignment of all systems essential to the prevention and mitigation of operational transients and accidents by a check of the control console (what to check and criteria for acceptable status shall be included on the checklist);

c. Identification of systems and components that are in a degraded mode of operation permitted by the Technical Specifications. For such systems and components, the length of time in the degraded mode shall be compared with the Technical Specifications action statement (this shall be recorded as a separate entry on the checklist).

2. Checklists or logs shall be provided for completion by the offgoing and oncoming auxiliary operators and technicians. Such checklists or logs shall include any equipment under maintenance of test that by themselves could degrade a system critical to the prevention and mitigation of operational transients and accidents or initiate an operational transient (what to check and criteria for acceptable status shall be included on the checklist); and

3. A system shall be established to evaluate the effectiveness of the shift and relief turnover procedure (for example, periodic independent verification of system alignments).

PVNGS Evaluation

PVNGS will have a procedure for shift relief which will include the use of checklists and the review of operating

logs. The relieving operator or supervisor will be required to sign that he has read the appropriate logs and completed the watch turnover as specified in the procedure.

Provisions will be made for periodic verification of the relief and turnover procedure.

The shift relief and turnover procedure and the provisions for its periodic verification will be prepared and implemented prior to PVNGS Unit 1 Operating License.

2.2.2.a

Control Room Access

2.2.2 IMPROVED IN-PLANT EMERGENCY PROCEDURES AND PREPARATIONS

2.2.2.a CONTROL ROOM ACCESS

NUREG-0578 Position

The licensee shall make provisions for limiting access to the control room to those individuals responsible for the direct operation of the nuclear power plant (e.g., operations supervisor, shift supervisor, and control room operators), to technical advisors who may be requested or required to support the operation, and to predesignated NRC personnel. Provisions shall include the following:

1. Develop and implement an administrative procedure that establishes the authority and responsibility of the person in charge of the control room to limit access.

2. Develop and implement procedures that establish a clear line of authority and responsibility in the control room in the event of an emergency. The line of succession for the person in charge of the control room shall be established and limited to persons possessing a current senior reactor operator's license. The plan shall clearly define the lines of communication and authority for plant management personnel not in direct command of operations, including those who report to stations outside of the control room.

PVNGS Evaluation

Prior to PVNGS Unit 1 Operating License, administrative procedures will be developed to limit personnel access to the unit control room during operational transient and accident conditions. These procedures will delineate:

1. That the shift supervisor has the authority to restrict control room access to personnel responsible for plant operations and technical advisory support to operations.

2. Clear lines of communications, authority, and responsibilities in the event of an emergency. Only senior licensed operators will direct the licensed operators.

2.2.2.b

Onsite Technical Support Center

2.2.2 IMPROVED IN-PLANT EMERGENCY PROCEDURES AND PREPARATIONS

2.2.2.b ONSITE TECHNICAL SUPPORT CENTER

NUREG-0578 Position

Each operating nuclear power plant shall maintain an onsite technical support center separate from and in close proximity to the control room that has the capability to display and transmit plant status to those individuals who are knowledgeable of and responsible for engineering and management support of reactor operations in the event of an accident. The center shall be habitable to the same degree as the control room for postulated accident conditions. The licensee shall revise his emergency plans as necessary to incorporate the role and location of the technical support center.

Records that pertain to the as-built conditions and layout of structures, systems and components shall be stored and filed at the site and accessible to the technical support center under emergency conditions. Examples of such records include a system description, general arrangement drawings, piping and instrumentation diagrams, piping system isometrics, electrical schematics, wire and cable lists, and single line electrical diagrams. It is not intended that all records described in ANSI 45.2.9-1974 be stored and filed at the site

and accessible to the technical support center under emergency conditions; however, as stated in that standard, storage systems shall provide for accurate retrieval of all information without undue delay.

PVNGS Evaluation

An Onsite Technical Support Center for Palo Verde Nuclear Generating Station will be established prior to PVNGS Unit 1 Operating License. This center will be located within the site boundary and will provide a work area for supervisory and technical personnel from Arizona Public Service Company and the NRC. It will have communications with the control room and the other response centers. An analysis will be performed to determine equipment to be incorporated into the center to monitor and display the status of the affected unit. The center will be habitable to permit occupancy following a loss of coolant accident. As-built drawings and other appropriate records shall be available in readily retrievable form at the site and shall be accessible to the Onsite Technical Support Center.

The Palo Verde Nuclear Generating Station Emergency Plan will be revised to describe the Onsite Technical Support Center and its function.

2.2.2.c

Onsite Operational Support Center

2.2.2 IMPROVED IN-PLANT EMERGENCY PROCEDURES AND PREPARATIONS

2.2.2.c ONSITE OPERATIONAL SUPPORT CENTER

NUREG-0578 Position

An area to be designated as the Onsite Operational Support Center shall be established. It shall be separate from the control room and shall be the place to which the operations support personnel will report in an emergency situation. Communications with the control room shall be provided. The Emergency Plan shall be revised to reflect the existence of the center and to establish the methods and lines of communication and management.

PVNGS Evaluation

Prior to PVNGS Unit 1 Operating License, an area separate from the unit control rooms will be designated as the PVNGS Onsite Operational Support Center prior to receipt of operating license. This will be an assembly area where plant operations support personnel will report in an emergency situation for further orders or assignment. The Operational Support Center will have communication with the control room and the Emergency Control Center (refer to the PVNGS Emergency Plan).

The Emergency Plan will reflect the existence of the Operational Support Center and will establish the methods and lines of communication and management.

2.2.3 REVISED LIMITING CONDITIONS FOR OPERATION OF NUCLEAR POWER PLANTS BASED UPON SAFETY SYSTEM AVAILABILITY

NUREG-0578 Position

All NRC nuclear power plant licensees shall provide information to define a limiting operational condition based on a threshold of complete loss of safety function. Identification of a human or operational error that prevents or could prevent the accomplishment of a safety function required by NRC regulations and analyzed in the license application shall require placement of the plant in a hot shutdown condition within 8 hours and in a cold shutdown condition within 24 hours.

The loss of operability of a safety function shall include consideration of the necessary instrumentation, controls, emergency electrical power sources, cooling or seal water, lubrication, operating procedures, maintenance procedures, test procedures and operator interface with the system, which must also be capable of performing their auxiliary or supporting functions. The limiting conditions for operation shall define the minimum safety functions for modes 1, 2, 3, 4, and 5 of operation.

The limiting conditions of operation shall require the following:

1. If the plant is critical, restore the safety function (if possible) and place the plant in a hot shutdown condition within 8 hours.

2. Within 24 hours, bring the plant to cold shutdown.

3. Determine the cause of the loss of operability of the safety function. Organizational accountability for the loss of operability of the safety system shall be established.

4. Determine corrective actions and measures to prevent recurrence of the specific loss of operability for the particular safety function and generally for any safety function.

5. Report the event within 24 hours by telephone and confirm by telegraph, mailgram, or facsimile transmission to the Director of the Regional Office, or his designee.

6. Prepare and deliver a Special Report to the NRC's Director of Nuclear Reactor Regulation and to the Director of the appropriate regional office of the Office of Inspection and Enforcement. The report shall contain the results of Steps 3 and 4 above,

along with a basis for allowing the plant to return to power operation. The senior corporate executive of the licensee responsible and accountable for safe plant operation shall deliver and discuss the contents of the report in a public meeting with the Office of Nuclear Reactor Regulation and the Office of Inspection and Enforcement at a location to be chosen by the Director of Nuclear Reactor Regulation.

7. A finding of adequacy of the licensee's Special Report by the Director of Nuclear Reactor Regulation will be required before the licensee returns the plant to power.

PVNGS Evaluation

In his August 20, 1979 memorandum to the NRC Commissioners, Harold R. Denton, Director, Office of Nuclear Reactor Regulatory, announced his intent to initiate a rulemaking proposal on limiting conditions of operations, which would include consideration of the recommendations of the Lessons Learned Task Force and alternative approaches. APS will follow this proposal with great interest and will participate in any rulemaking proceedings that may be instituted.

PALO VERDE NUCLEAR GENERATING STATION

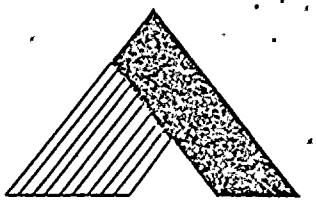

UNITS 1, 2 & 3

TMI-2 LESSONS LEARNED IMPLEMENTATION REPORT

8006230

SEPTEMBER 1979

ARIZONA PUBLIC SERVICE COMPANY
P. O. BOX 21666 · PHOENIX, ARIZONA 85036

September 28, 1979
ANPP-13905 - JMA/DBK

Director of Nuclear Reactor Regulation
U.S. Nuclear Regulatory Commission
Washington, D.C. 20555

Re: Palo Verde Nuclear Generating Station
Units 1, 2 and 3
Docket Nos. STN 50-528/529/530

Dear Sir:

As a result of the Three Mile Island accident, Arizona Public Service Company (APS) is in the process of assuring that the lessons learned from TMI-2 are reflected in the Palo Verde Nuclear Generating Station (PVNGS) design and operation.

To accomplish this objective, the APS President and Chief Executive Officer, by a directive issued April 12, 1979, established a Safety Evaluation Task Force "to conduct a complete review and analysis of the Three Mile Island accident and its implications for the Palo Verde Nuclear Generating Station project." This task force is comprised of fourteen (14) members from knowledgeable, high levels of management of the utilities participating in the Palo Verde project, the engineer-constructor for the project, the nuclear steam supply system supplier, and turbine generator supplier to the project and the academic technical consultants to the Arizona State Senate and House legislative committees organized to review and consider the implications of the TMI accident.

The task force is exercising oversight of the on-going independent in-depth reviews, initiated since the TMI accident, of the Palo Verde design, planned administrative and operational procedures, training and qualification programs, and emergency response plans. In this connection, it is closely following the work and recommendations of the many industry and governmental organizations currently conducting similar, but more generic investigations related to the TMI accident, including particularly the NRC's Lessons Learned Task Force.

Upon receipt of the TMI-2 Lessons Learned Task Force Status Report and Short Term Recommendations (NUREG-0578), modified as set forth in the memorandum dated August 20, 1979 from Harold R. Denton, Director, Office of Nuclear Reactor Regulation to the NRC Commissioners, the recommendations related to the design and operation of the Palo Verde project were evaluated. The results of this evaluation are incorporated in the report entitled TMI-2 Lessons Learned Implementation Report submitted herewith. The report identifies those NUREG-0578 recommendations which are incorporated into the present Palo Verde design, identifies recommendations that are not applicable to the Palo Verde design and sets forth APS' commitments to develop the analyses, design modifications, operational procedures and other measures necessary to meet such recommendations in accordance with the schedule specified in NUREG-0578. The report will be amended as appropriate to incorporate the manner in which such commitments are implemented.

Five (5) copies of this report are enclosed for your review. It is hoped that this report, in conjunction with the PVNGS Final Safety Analysis Report to be submitted in October, 1979, will assist in your timely review of the implications of TMI on PVNGS.

Respectfully submitted,

ARIZONA PUBLIC SERVICE COMPANY

By: Edwin E. Van Brunt

Edwin E. Van Brunt, Jr.
Vice President

STATE OF ARIZONA)
) ss.
County of Maricopa)

On its own behalf and as agent for all other joint participants.

Subscribed and sworn to before me this 27 day of Sept, 1979.

John M. Allen
Notary Public

My Commission expires:
My Commission Expires Jan. 23, 1983

TABLE OF CONTENTS

INTRODUCTION

DESIGN AND ANALYSIS — PAGE NO.

2.1.1 Emergency Power Supply Requirements for the Pressurizer Heaters, Power Operated Relief Valves and Block Valves, and Pressurizer Level Indicators in PWRs. 2.1.1-1

2.1.1.a Pressurizer Heater Power Supply 2.1.1-1

2.1.1.b Power Supply for Pressurizer Relief and Block Valves and Pressurizer Level Indocators. 2.1.1-5

2.1.2 Performance Testing for BWR and PWR Relief and Safety Valves. 2.1.2-1

2.1.3 Information to Aid Operators in Accident Diagnosis and Control. 2.1.3-1

2.1.3.a Direct Indication of Power Operated Relief Valve and Safety Valve Position for PWRs and BWRs 2.1.3-1

2.1.3.b Instrumentation for Detection of Inadequate Core Cooling in PWRs and BWRs 2.1.3-3

2.1.4 Containment Isolation Provisions for PWRs and BWRs 2.1.4-1

2.1.5 Post-Accident Hydrogen Control Systems for PWR and BWR Containments. 2.1.5-1

2.1.5.a Dedicated Penetrations for External Recombiner or Post-Accident External Purge System. 2.1.5-1

DESIGN AND ANALYSIS (continued) PAGE NO.

2.1.5.b Inerting BWR Containments. 2.1.5-3

2.1.5.c Capability to Install Hydrogen Recombiner at Each Light Water Nuclear Power Plant. 2.1.5-4

2.1.6 Post Accident Control of Radiation in Systems Outside Containment of PWRs and BWRs 2.1.6-1

2.1.6.a Integrity of Systems Outside Containment Likely to Contain Radioactive Materials (Engineered Safety Systems and Auxiliary Systems) for PWRs and BWRs 2.1.6-1

2.1.6.b Design Review of Plant Shielding and Environmental Qualification of Equipment for Spaces/Systems Which May Be Used in Operations 2.1.6-3

2.1.7 Improved Auxiliary Feedwater System Reliability for PWRs 2.1.7-1

2.1.7.a Automatic Initiation of the Auxiliary Feedwater System for PWRs. . . . 2.1.7-1

2.1.7.b Auxiliary Feedwater Flow Indication to Steam Generator for PWRs. 2.1.7-7

2.1.8 Instrumentation to Follow the Course of an Accident 2.1.8-1

2.1.8.a Improved Post-Accident Sampling Capability 2.1.8-1

2.1.8.b Increased Range of Radiation Monitors. . . 2.1.8-4

2.1.8.c Improved In-Plant Iodine Instrumentation. 2.1.8-7

2.1.9 Analysis of Design and Off-Normal Transients and Accidents 2.1.9-1

DESIGN AND ANALYSIS (continued) PAGE NO.

2.1.10 Instrumentation to Monitor Containment Conditions During the Course of an Accident. 2.1.10-1

2.1.11 Installation of Remotely Operated High Point Vents in the Reactor Coolant System. 2.1.11-1

OPERATIONS

2.2.1 Improved Reactor Operations Command Function. 2.2.1-1

2.2.1.a Shift Supervisors Responsibilities. 2.2.1-1

2.2.1.b Shift Technical Advisor 2.2.1-4

2.2.1.c Shift Relief and Turnover Procedure 2.2.1-6

2.2.2 Improved In-Plant Emergency Procedures and Preparations. 2.2.2-1

2.2.2.a Control Room Access 2.2.2-1

2.2.2.b Onsite Technical Support Center 2.2.2-3

2.2.2.c Onsite Operational Support Center 2.2.2-5

INTRODUCTION

The Palo Verde Nuclear Generating Station NUREG-0578 Evaluation addresses the "TMI-2 Lessons Learned Task Force Status Report And Short Term Recommendations" (NUREG-0578), July 1979, as supplemented by letter dated August 20, 1979 from Harold R. Denton, Director, Office of Nuclear Reactor Regulation to the NRC Commissioners.

Each recommendation is addressed, as it applies to the Palo Verde Nuclear Generating Station (PVNGS) design and operation, in the following manner:

(1) Descriptions of the existing PVNGS design correspond with information presented in the PVNGS Final Safety Analysis Report (FSAR).

(2) Proposed modifications, evaluations and analyses of the PVNGS design, as discussed herein, will be summarized in revisions to this report.

(3) Recommendation numbering corresponds to that used in NUREG-0578.

This report will be referenced by subsequent PVNGS FSAR amendments, as appropriate, to address in the FSAR, required modifications and analyses as discussed herein.

Pressurizer Heater Power Supply

2.1.1 EMERGENCY POWER SUPPLY REQUIREMENTS FOR THE PRESSURIZER HEATERS, POWER OPERATED RELIEF VALVES AND BLOCK VALVES, AND PRESSURIZER LEVEL INDICATORS IN PWRs

2.1.1.a PRESSURIZER HEATER POWER SUPPLY

NUREG-0578 Position

1. The pressurizer heater power supply design shall provide the capability to supply, from either the offsite power source or the emergency power source (when offsite power is not available), a predetermined number of pressurizer heaters and associated controls necessary to establish and maintain natural circulation at hot standby conditions. The required heaters and their controls shall be connected to the emergency buses in a manner that will provide redundant power supply capability.

2. Procedures and training shall be established to make the operator aware of when and how the required pressurizer heaters shall be connected to the emergency buses. If required, the procedures shall identify under what conditions selected emergency loads can be shed from the emergency power source to provide sufficient capacity for the connection of the pressurizer heaters.

3. The time required to accomplish the connection of the preselected pressurizer heater to the emergency buses shall be consistent with the timely initiation and maintenance of natural circulation conditions.

4. Pressurizer heater motive and control power interfaces with the emergency buses shall be accomplished through devices that have been qualified in accordance with safety-grade requirements.

PVNGS Evaluation

The PVNGS pressurizer heaters are powered as follows:

1. The pressurizer heaters (36 elements rated at 50 KW each, connected in 12 groups of 3 delta-connected elements each) have a total capacity of 1800 KW. The heaters are supplied 480 volt power from the non-Class IE and Class IE distribution systems as follows:

	Number of Heaters	Capacity (KW)	480V Bus	IE Bus
A.	5-3 element groups	750	NGN-L11	No
B.	5-3 element groups	750	NGN-L12	No
C.	1-3 element group	150	PGA-L33	Yes
D.	1-3 element group	150	PGB-L32	Yes

Maintenance of natural circulation at hot standby conditions requires 150 KW of heaters. These heaters are immediately available from either of two redundant Class IE buses, fed independently by Safety Trains A and B. Controls for these heaters are likewise independent. As the Class IE buses are a part of the ESF distribution system, they are fed either from the offsite power system or the diesel generators when offsite power is not available.

Heaters supplied from the non-Class IE power system are fed from the offsite power system and are available for manual interconnection to the diesel generators when offsite power is not available.

2. Heaters fed from the Class IE power system (150KW) are automatically connected to the ESF buses, following either a loss of offsite power or an engineered safety features actuation system signal, by their respective load sequencer.

   Heaters fed from non-Class IE buses can be manually connected to the Class IE buses for powering by either the offsite power system or the diesel generators through the ESF transformers. These heaters are available in 150 KW blocks (0-150 KW in the case of the two proportional groups). Sufficient margin exists in the diesel generators for at least an additional 300 KW of heaters to be backfed from each Class IE bus without the shedding of selected emergency loads.

3. No manual connection of pressurizer heaters to the Class IE power system is required to maintain natural circulation at hot standby.

4. The redundant pressurizer heater required for maintenance of natural circulation at hot standby are fed from Class IE buses via Class IE load side breakers qualified in accordance with safety-grade requirements.

The PVNGS pressurizer heaters, as presently design, comply with the recommendations of NUREG-0578, July 1979.

2.1.1.b

Power Supply for Pressurizer Relief and Block Valves and Pressurizer Level Indicators

2.1.1 EMERGENCY POWER SUPPLY REQUIREMENTS FOR THE PRESSURIZER HEATERS, POWER OPERATED RELIEF VALVES AND BLOCK VALVES, AND PRESSURIZER LEVEL INDICATORS IN PWRs

2.1.1.b POWER SUPPLY FOR PRESSURIZER RELIEF AND BLOCK VALVES AND PRESSURIZER LEVEL INDICATORS

NUREG-0578 Position

1. Motive and control components of the power-operated relief valves (PORVs) shall be capable of being supplied from either the offsite power source or the emergency power source when the offsite power is not available.

2. Motive and control components associated with the PORV block valves shall be capable of being supplied from either the offsite power source or the emergency power source when the offsite power is not available.

3. Motive and control power connections to the emergency buses for the PORVs and their associated block valves shall be through devices that have been qualified in accordance with safety-grade requirements.

4. The pressurizer level indication instrument channels shall be powered from the vital instrument buses. These buses shall have the capability of being supplied from either the offsite power source or the emergency power source when offsite power is not available.

PVNGS Evaluation

1. PVNGS does not use PORVs and block valves.

2. PVNGS does not use PORVs and block valves.

3. PVNGS does not use PORVs and block valves.

4. Two channels of Class IE level instrumentation are provided for PVNGS. Pressurizer level channels L-110X and L-110Y (refer to Figure 2.1.11-2) are indicated in the control room. Channel L-110X is also recorded in the control room.

   The pressurizer level instrumentation is powered from 120V AC Class IE instrument buses E-PNA-D25 and E-PNB-D26 (refer to Figure 2.1.1-1). These buses are normally powered through inverters from Class IE batteries. The Class IE battery chargers are powered from offsite power or from the diesel generators when offsite power is not available.

The pressurizer level indicators, as presently designed, comply with the recommendations of NUREG-0578, July 1979.

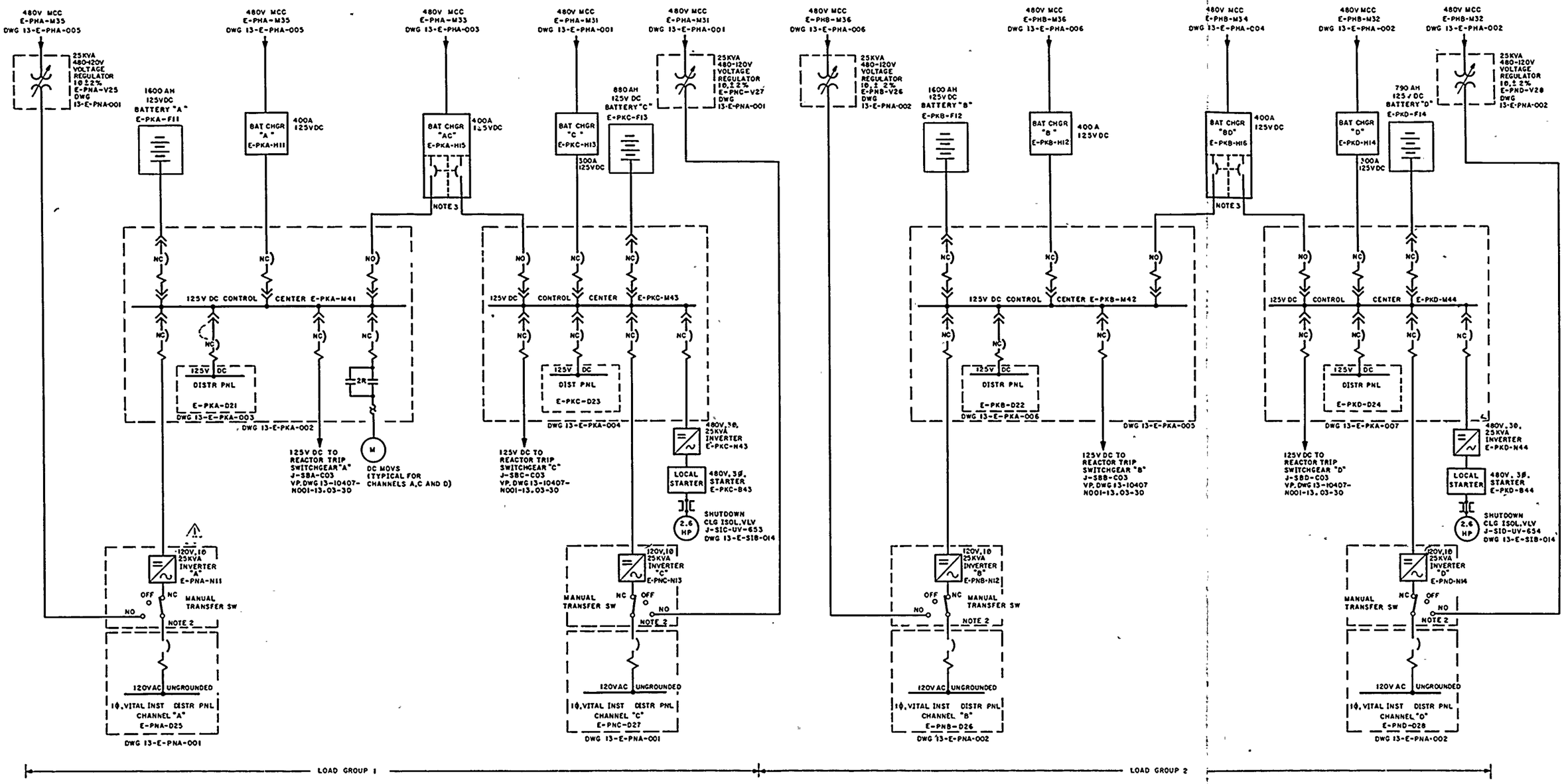

NOTES:

1. FOR LEGEND & GENERAL NOTES REFER TO DWGS 13-E-ZZB-001 THROUGH 007
2. THIS INDICATES MANUAL TWO POLE THREE POSITION TRANSFER SWITCH
3. OUTPUT SWITCHES IN BATTERY CHARGERS "AC" & "BD" ARE MECHANICALLY INTERLOCKED TO OFFER THE POSSIBILITY OF EITHER BOTH OPEN OR ONE CLOSED AND ONE OPEN AT ANY TIME

13-E-PKA-001 REV 1

Palo Verde Nuclear Generating Station

SINGLE LINE DIAGRAM
DC POWER SYSTEM

Figure 2.1.1-1

2.1.2 PERFORMANCE TESTING FOR BWR AND PWR RELIEF AND SAFETY VALVES

NUREG-0578 Position

Pressurized water reactor and boiling water reactor licensees and applicants shall conduct testing to qualify the reactor coolant system relief and safety valves under expected operating conditions for design basis transients and accidents. The licensees and applicants shall determine the expected valve operating conditions through the use of analyses of accidents and anticipated operational occurrences referenced in Regulatory Guide 1.70, Revision 2. The single failures applied to these analyses shall be chosen so that the dynamic forces on the safety and relief valves are maximized. Test pressures shall be the highest predicted by conventional safety analysis procedures. Reactor coolant system relief and safety valve qualification shall include qualification of associated control circuitry piping and supports, as well as the valves themselves.

PVNGS Evaluation

PVNGS does not utilize pressure operated relief valves.

An analysis will be performed to determine the expected code safety valve operating conditions based upon the accidents and anticipated operational occurrences described in the PVNGS FSAR.

When this analysis is completed, generic code safety valve qualification tests will be performed, as necessary, to qualify the valve for expected operating conditions following an accident or anticipated operational occurrence. In addition, the discharge piping and supports will be analyzed for their expected operating conditions. Performance of qualification tests is dependent on the availability of test facilities capable of simulating the expected operating conditions.

The results of these analyses and tests will be provided prior to PVNGS Unit 1 Operating License.

2.1.3.a

Direct Indication of Power Operated Relief Valve and Safety Valve Position for PWRs and BWRs

2.1.3 INFORMATION TO AID OPERATORS IN ACCIDENT DIAGNOSIS AND CONTROL

2.1.3.a DIRECT INDICATION OF POWER-OPERATED RELIEF VALVE AND SAFETY VALVE POSITION FOR PWRs AND BWRs

NUREG-0578 Position

Reactor system relief and safety valves shall be provided with a positive indication in the control room derived from a reliable valve position detection device or a reliable indication of flow in the discharge pipe.

PVNGS Evaluation

PVNGS does not utilize power operated relief valves.

The PVNGS pressurizer code safety valves are headered into the reactor drain tank (RDT), inside containment. Upstream of the common header each code safety valve is monitored for seat leakage by an in-line RTD (refer to Figure 2.1.11-2). Indirect indication of code safety valve operation is provided by RDT pressure, pressurizer pressure and pressurizer level instrumentation.

An evaluation will be performed to determine if the multiple indirect indications of code safety valve status provided in the PVNGS design provide unambiguous indication that a small break area LOCA is in progress.

If the evaluation determines that direct valve status indication in the control room is required (e.g. by acoustic techniques, flow measurement or valve position indication), it will be incorporated in the PVNGS design prior to Unit 1 Operating License.

Results of this evaluation will be provided by January 1980.

2.1.3.b

Instrumentation for Detection of Inadequate Core Cooling in PWRs and BWRs

2.1.3 INFORMATION TO AID OPERATORS IN DIAGNOSIS AND CONTROL

2.1.3.b INSTRUMENTATION FOR DETECTION OF INADEQUATE CORE COOLING IN PWRs AND BWRs.

NUREG-0578 Position

1. Licensees shall develop procedures to be used by the operator to recognize inadequate core cooling with currently available instrumentation. The licensee shall provide a description of the existing instrumentation for the operators to use to recognize these conditions. A detailed description of the analysis needed to form the basis for operator training and procedure development shall be provided pursuant to another short-term requirement, "Analysis of Off-Normal Conditions, Including Natural Circulation".

. In addition, each PWR shall install a primary coolant saturation meter to provide on-line indication of coolant saturation condition. Operator instruction as to use of this meter shall include consideration that is not to be used exclusive of other related plant parameters.

2. Licensees shall provide a description of any additional instrumentation or controls (primary or backup) proposed for the plant to supplement those devices cited in the preceding section giving an unambiguous, easy-to-interpret indication of inadequate core cooling. A description of the functional design requirements for the system shall also be included. A description of the procedures to be used with the proposed equipment, the analysis used in developing these procedures, and a schedule for installing the equipment shall be provided.

PVNGS Evaluation

Information to diagnose inadequate core cooling is as follows:

1. Prior to PVNGS Unit 1 Operating License, procedures will be developed to aid the operator in recognition of inadequate core cooling. These procedures will utilize existing redundant safety related instrumentation such as:

A.	Pressurizer Pressure	1500-2500 psia
B.	Pressurizer Pressure	0-3000 psia
C.	Pressurizer Level	0-100%
D.	Coolant Temperature	
	- Hot Leg	375-675F
	- Cold Leg	465-615F

These procedures will be based upon analyses performed as discussed in Section 2.1.9. Redundant subcooling meters will be installed prior to PVNGS Unit 1 Operating License to provide additional indication of primary coolant saturation condition. The procedures discussed in Item 1 will incorporate the use of primary coolant saturation indication.

2. Upon completion of the analyses described in Section 2.1.9, an evaluation will be performed to determine the need, if any, for additional instrumentation, such as reactor vessel level indication. Any instrumentation determined to be necessary will be installed prior to PVNGS Unit 1 Operating License.

2.1.4. CONTAINMENT ISOLATION PROVISIONS FOR PWRs AND BWRs

NUREG-0578 Position

1. All containment isolation system designs shall comply with the recommendations of SRP 6.2.4; i.e., that there be diversity in the parameters sensed for the initation of containment isolation.
2. All plants shall give careful reconsideration to the definition of essential and non-essential systems, shall identify each system determined to be essential, shall identify each system determined to be non-essential, shall describe the basis for selection of each essential system, shall modify their containment isolation designs accordingly, and shall report the results of the re-evaluation to the NRC.
3. All non-essential systems shall be automatically isolated by the containment isolation signal.
4. The design of control systems for automatic containment isolation valves shall be such that resetting the isolation signal will not result in the automatic re-opening of containment isolation valves. Reopening of containment isolation valves shall require deliberate operator action.

PVNGS Evaluation

The PVNGS containment isolation system is designed as follows:

1. As required by SRP 6.2.4, a containment isolation signal is diversely generated by either a high containment pressure signal (5 psig) or a low pressurizer pressure signal (1600 psig). These parameters additionally generate a safety injection actuation signal. The power access purge is additionally isolated by high containment purge radioactivity.

2. A review of the PVNGS containment isolation system will be performed to determine that no essential systems are automatically isolated by a containment isolation actuation signal(CIAS). Essential systems will be selectively isolated by the operator after their use is no longer required.

   The results of this review will be provided to the NRC staff by January 1980. Plant modifications, if any, will be performed prior to PVNGS Unit 1 Operating License.

3. All non-essential systems penetrating the PVNGS containment are isolated by CIAS.

4. Resetting of a CIAS does not result in the automatic opening of containment isolation valves. Re-opening requires operator action for each valve.

2.1.5.a

Dedicated Penetrations for External Recombiner or Post-Accident External Purge System

2.1.5 POST ACCIDENT HYDROGEN CONTROL SYSTEMS FOR PWR AND BWR CONTAINMENTS

2.1.5.a DEDICATED PENETRATIONS FOR EXTERNAL RECOMBINER OR POST-ACCIDENT EXTERNAL PURGE SYSTEM

NUREG-0578 Position

Plants using external recombiners or purge systems for post-accident combustible gas control of the containment atmosphere should provide containment isolation systems for external recombiner or purge systems that are dedicated to that service only, that meet the redundancy and single failure requirements of General Design Criteria 54 and 56 of Appendix A to 10 CFR Part 50, and that are sized to satisfy the flow requirements of the recombiner or purge system.

PVNGS Evaluation

Combustible gas concentration in the PVNGS containment building is maintained by the Containment Hydrogen Control System.

The PVNGS Containment Hydrogen Control System (refer to Figure 2.1.5-1) shares no equipment or penetrations with the normal containment purge system and includes:

1. Two redundant and independent hydrogen gas analyzers with separate piping, valves, controls and instrumentations (refer to Section 2.1.10).

2. Redundant and independent mobile, hydrogen recombiners (two for the PVNGS site) with separate supply and return lines, utilizing separate penetrations for each line.

3. Redundant and independent supply and return line isolation valving (one valve inside containment and one outside containment) that meets the requirements of 10 CFR 50, Appendix A, Criterion 54 and 56.

4. Dedicated containment penetrations sized for maximum recombiner flow requirements.

The PVNGS Containment Hydrogen Control System, as currently designed, provides dedicated penetrations and isolation systems that meet redundancy and single failure requirements as recommended by NUREG-0578, July 1979.

Inerting BWR Containments

2.1.5 POST ACCIDENT HYDROGEN CONTROL SYSTEMS FOR PWR AND BWR CONTAINMENTS

2.1.5.b INERTING BWR CONTAINMENTS

NUREG-0578 Position

It shall be required that the Vermont Yankee and Hatch 2 Mark I BWR containments be inerted in a manner similar to other operating BWR plants. Inerting shall also be required for near term OL licensing of Mark I and Mark II BWRs.

PVNGS Evaluation

PVNGS utilizes Combustion Engineering, Inc. System 80^{tm} PWRs with a containment with 2.6×10^6 ft^3 net free volume. Inerting of the PVNGS containment is not required.

2.1.5.c

Capability to Install Hydrogen Recombiner at Each Light Water Nuclear Power Plant

2.1.5. POST ACCIDENT HYDROGEN CONTROL SYSTEMS FOR PWR AND BWR CONTAINMENTS

2.1.5.c CAPABILITY TO INSTALL HYDROGEN RECOMBINER AT EACH LIGHT WATER NUCLEAR POWER PLANT

NUREG-0578 Position (Minority View)

1. All licensees of light water reactor plants shall have the capability to obtain and install recombiners in their plants within a few days following an accident if containment access is impaired and if such a system is needed for long-term post-accident combustible gas control.
2. The procedures and bases upon which the recombiners would be used on all plants should be the subject of a review by the licensees in considering shielding requirements and personnel exposure limitations as demonstrated to be necessary in the case of TMI-2.

PVNGS Evaluation

The PVNGS hydrogen recombiners are designed as follows:

1. PVNGS will have available, onsite, two mobile hydrogen recombiners designed to limit the concentration of hydrogen in containment. These hydrogen recombiners are capable of being installed in the affected unit within 24 hours following an accident.

2. Installation procedures for the hydrogen recombiners will be developed and shielding requirements re-analyzed prior to PVNGS Unit 1 Operating License.

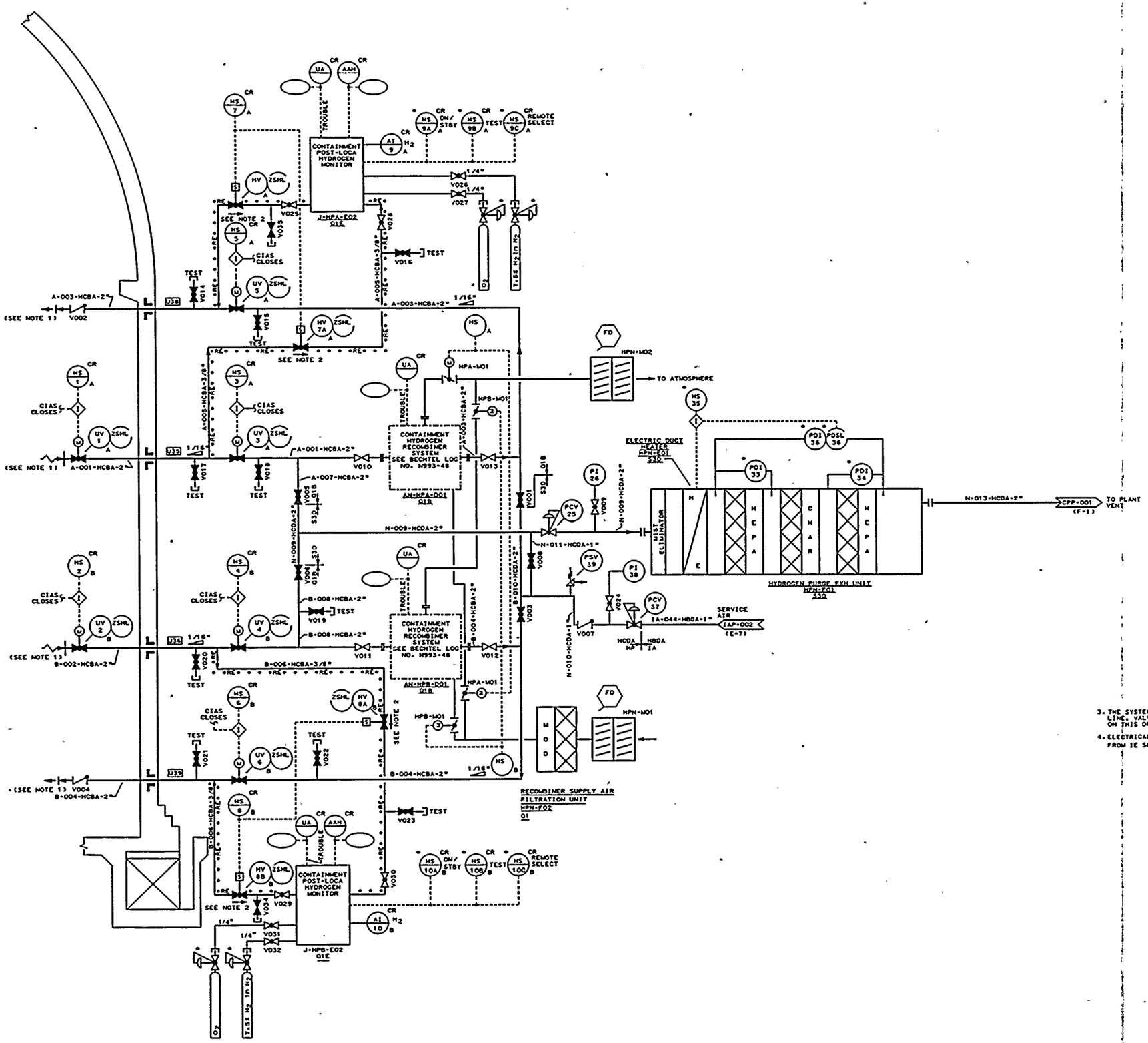

NOTES:

1. INSTALL VALVES WITH FLOW DIRECTION ARROW IN DIRECTION NOTED TO CLOSE AGAINST CONTAINMENT DESIGN PRESSURE.
2. PIPE SHALL BE THREADED TO ACCEPT A 2" X 1" CAPPED TEST REDUCER AS SHOWN BELOW.

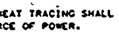

DURING NORMAL OPERATION WHEN END OF PIPE IS OPEN, PROVIDE SCREW COUPLINGS FOR PROTECTION OF THE THREAD.

3. THE SYSTEM DESIGNATOR HP IS TO PRECEDE ALL LINE, VALVE, AND INSTRUMENT NUMBERS SHOWN ON THIS DRAWING UNLESS OTHERWISE INDICATED.
4. ELECTRICAL HEAT TRACING SHALL BE POWERED FROM 1E SOURCE OF POWER.

13-M-HPP-001 REV 3

Palo Verde Nuclear Generating Station

COMBUSTIBLE GAS CONTROL SYSTEM

Figure 2.1.5-1

2.1.6.a

Integrity of Systems Outside Containment Likely to Contain Radioactive Materials (Engineered Safety Systems and Auxiliary Systems) for PWRs and BWRs

2.1.6 POST ACCIDENT CONTROL OF RADIATION IN SYSTEMS OUTSIDE CONTAINMENT OF PWRs AND BWRs

2.1.6.a INTEGRITY OF SYSTEMS OUTSIDE CONTAINMENT LIKELY TO CONTAIN RADIOACTIVE MATERIALS (ENGINEERED SAFETY SYSTEMS AND AUXILIARY SYSTEMS) FOR PWRs AND BWRs

NUREG-0578 Position

Applicants and licensees shall immediately implement a program to reduce leakage from systems outside containment that would or could contain highly radioactive fluids during a serious transient or accident to as-low-as-practical levels. This program shall include the following:

1. Immediate Leak Reduction

   a. Implement all practical leak reduction measures for all systems that could carry radioactive fluids outside of containment.

   b. Measure actual leakage rates with system in operation and report them to the NRC.

2. Continuing Leak Reduction

   Establish and implement a program of preventive maintenance to reduce leakage to as-low-as-practical levels in systems outside containment likely to contain highly radioactive fluid during a serious transient or accident.

PVNGS Evaluation

The PVNGS program of preventive maintenance will reduce leakage to as low as practical. The program will include:

1. In-service inspection of ASME Class 2 and 3 systems in accordance with AMSE Boiler and Pressure Vessel Code Section XI, including pressure tests.

2. Alarming of abnormal airborne radioactivity levels by the radiation monitoring system for gaseous radwaste system leakage.

3. Routine monitoring of plant components.

Undesirable leakage identified during tests or inspections will be reduced to a level as low as is practical.

2.1.6.b

Design Review of Plant Shielding and Environmental Qualification of Equipment for Spaces/Systems Which May Be Used in Operations

2.1.6 POST ACCIDENT CONTROL OF RADIATION IN SYSTEMS OUTSIDE CONTAINMENT OF PWRs AND BWRs

2.1.6.b DESIGN REVIEW OF PLANT SHIELDING AND ENVIRONMENTAL QUALIFICATION OF EQUIPMENT FOR SPACES/SYSTEMS WHICH MAY BE USED IN OPERATIONS

NUREG-0578 Position

With the assumption of a post-accident release of radioactivity equivalent to that described in Regulatory Guides 1.3 and 1.4 (i.e., the equivalent of 50% of the core radioiodine and 100% of the core noble gas inventory are contained in the primary coolant), each licensee shall perform a radiation and shielding design review of the spaces around systems that may, as a result of an accident, contain highly radioactive materials. The design review should identify the location of vital areas and equipment, such as the control room, radwaste control stations, emergency power supplies, motor control centers, and instrument areas, in which personnel occupancy may be unduly limited or safety equipment may be unduly degraded by the radiation fields during post-accident operations of these systems.

Each licensee shall provide for adequate access to vital areas and protection of safety equipment by design changes, increased permanent or temporary shielding, or post-accident procedural controls. The design review shall determine which types of corrective actions are needed for vital areas throughout the facility.

PVNGS Evaluation

As part of the PVNGS design process, shielding in areas requiring personnel access for accident mitigation is designed such that access is not unduly limited. In addition, safety related equipment is qualified for the maximum expected equipment life dose.

An analysis of the PVNGS shielding design criteria, now based on ALARA, will be performed to determine if the results of TMI invalidate any of the PVNGS shielding criteria. If, as a result of this analysis, the shielding design criteria in a plant area requires modification, the shielding in that area will be redesigned based on revised criteria. Any increase in permanent or temporary shielding, redesign or procedural control determined to be necessary will be completed prior to PVNGS Unit 1 Operating License. Refer to Section 2.1.8.a for a discussion of sampling system shielding.

2.1.7.a

Automatic Initiation of the Auxiliary Feedwater System for PWRs

2.1.7 IMPROVED AUXILIARY FEEDWATER SYSTEM RELIABILITY FOR PWRs

2.1.7.a AUTOMATIC INITIATION OF THE AUXILIARY FEEDWATER SYSTEM FOR PWRs

NUREG-0578 Position

Consistent with satisfying the requirements of General Design Criterion 20 of Appendix A to 10 CFR Part 50 with respect to the timely initiation of the auxiliary feedwater system, the following requirements shall be implemented in the short term:

1. The design shall provide for the automatic initiation of the auxiliary feedwater system.

2. The automatic initiation signals and circuits shall be designed so that a single failure will not result in the loss of auxiliary feedwater system function.

3. Testability of the initiating signals and circuits shall be a feature of the design.

4. The initiating signals and circuits shall be powered from the emergency buses.

5. Manual capability to initiate the axuiliary feedwater system from the control room shall be retained and shall be implemented so that a single failure in the manual circuits will not result in the loss of system function.

6. The AC motor-driven pumps and valves in the auxiliary feedwater system shall be included in the automatic actuation (simultaneous and/or sequential) of the loads to the emergency buses.

7. The automatic initiating signals and circuits shall be designed so that their failure will not result in the loss of manual capability to initiate the AFWS from the control room.

8. In the long term, the automatic initiation signals and circuits shall be upgraded in accordance with safety-grade requirements.

PVNGS Evaluation

1. The Auxiliary Feedwater System shown in Figure 2.1.7-1 consists of two Seismic Category I pumps and their associated valves and one non-Seismic Category I pump and its associated valves.

   The Seismic Category I portion of the auxiliary feedwater system is provided to automatically initiate residual heat removal capability during emergency conditions, such as a steam line rupture, loss of normal feedwater, or loss of offsite and normal onsite power.

The Seismic Category I portion of the auxiliary feedwater system is automatically actuated by an Auxiliary Feedwater Actuation Signal (AFAS) from the Engineered Safety Features Actuation System (ESFAS). The AFAS is initiated for each steam generator by a low steam generator level coincident with a "not ruptured" calculated signal for that steam generator (refer to Figure 2.1.7-2).

The AFAS logic determines whether a steam generator is not intact in the event of a secondary system break by sensing:

- The steam generator has initiated a low water level trip.
- The steam generator pressure is less than the other by a predetermined value.
- The other steam generator has been calculated as not being ruptured.

The non-Seismic Category I portion of the auxiliary feedwater system is provided for normal non-emergency operation during startup, cooldown, and hot standby.

2. The Seismic Category I portion of the auxiliary feedwater system is composed of components in two separate and diverse load groups (i.e., load group 1 and load group 2. Each of the four auxiliary feedwater valves associated with each steam generator is automatically actuated in such a manner that no single failure can prevent either the supply of auxiliary feedwater to an intact steam generator or the

isolation of auxiliary feedwater from a ruptured steam generator. Load group 2 powers the Seismic Category I motor-driven auxiliary feedwater pump and its associated valves and controls. Load group 1 supplies dc power to the steam-driven turbine controls and the valves associated with the turbine-driven auxiliary feedwater pump. No ac power is required for support of the turbine-driven auxiliary feedwater train. The instrumentation and controls of the components and equipment in load group 1 are physically and electrically separate and independent of the instrumentation and controls of the components and equipment in load group 2. This separation is maintained such that both trains are not terminated on common logic circuits.

3. Provisions are made to permit periodic testing of the auxiliary feedwater initiation signals and circuitry. These tests cover the trip actions from sensor input through the protection system and actuation devices. The system test does not interfere with the system protective function. The testing system meets the criteria of IEEE-338-1971, "IEEE Trial-Use Criteria for the Periodic Testing of Nuclear Power Generating Station Protective Systems," and Regulatory Guide 1.22,

"Periodic Testing of Protection System Actuator Functions." Testing is performed in accordance with the surveillance test requirements of the PVNGS Technical Specifications.

4. AFAS circuits are a part of the Engineered Safety Features Systems. The initiating signals and circuits are powered from Class IE buses in separate load groups as discussed in Item 2. The initiating sensors are powered from separate and redundant Class IE nuclear instrumentation and control panels, each of which is supplied by either offsite power or the diesel generators when offsite power is not available and is backed up by Class IE batteries.

5. Manual initiation capability for each auxiliary feedwater train exists in the control room. Control of individual auxiliary feedwater system components is also available in the control room. No single failure in the manual initiation portion of the circuit can result in the loss of auxiliary feedwater system function.

6. The Seismic Category I AC motor-driven pump and power operated valves in its train are automatically and sequentially loaded on the diesel generator bus upon loss of offsite power.

7. Failure of the AFAS will not result in the loss of manual capability to control auxiliary feedwater system components from the control room.

8. AFAS circuits are Class IE as presently designed.

The PVNGS auxiliary feedwater system, as presently designed, complies with the recommendations of NUREG-0578, July 1979.

2.1.7.b

Auxiliary Feedwater Flow Indication to Steam Generator for PWRs

2.1.7 IMPROVED AUXILIARY FEEDWATER SYSTEM RELIABILITY FOR PWRs

2.1.7.b AUXILIARY FEEDWATER FLOW INDICATION TO STEAM GENERATOR FOR PWRs

NUREG-0578 Position

Consistent with satisfying the requirements set forth in GDC 13 to provide the capability in the control room to ascertain the actual performance of the AFWS when it is called to perform its intended function, the following requirements shall be implemented:

1. Safety-grade indication of auxiliary feedwater flow to each steam generator shall be provided in the control room.

2. The auxiliary feedwater flow instrument channels shall be powered from the emergency buses consistent with satisfying the emergency power diversity requirements of the auxiliary feedwater system set forth in Auxiliary Systems Branch Technical Position 10-1 of the Standard Review Plan, Section 10.4.9.

PVNGS Evaluation

1. Monitoring of both trains of auxiliary feedwater flow is provided at PVNGS. These flow indicator channels are made from highly reliable non-Class IE components and are displayed on the

main control boards. Class IE (safety grade) pressure indicators located upstream of the manual block valves are also provided. Pressure indicator PI-18A and flow indicator FI-40 monitor flow from the train A turbine-driven auxiliary feedwater pump (refer to Figure 2.1.7-1). Pressure indicator PI-17A and flow indicator FI-41 monitor the flow from the train B motor-driven auxiliary feedwater pump.

2. The safety grade pressure indication channels are powered from their associated trains redundant Class IE buses.. The instrument bus powering the auxiliary feedwater flow instrumentation is normally powered from a non-Class IE 480 V motor control center (MCC). Upon loss of this MCC the instrument bus is automatically transferred to a Class IE MCC via a Class IE isolation transformer. This Class IE MCC is powered from offsite power or from its diesel generator when offsite power is not available.

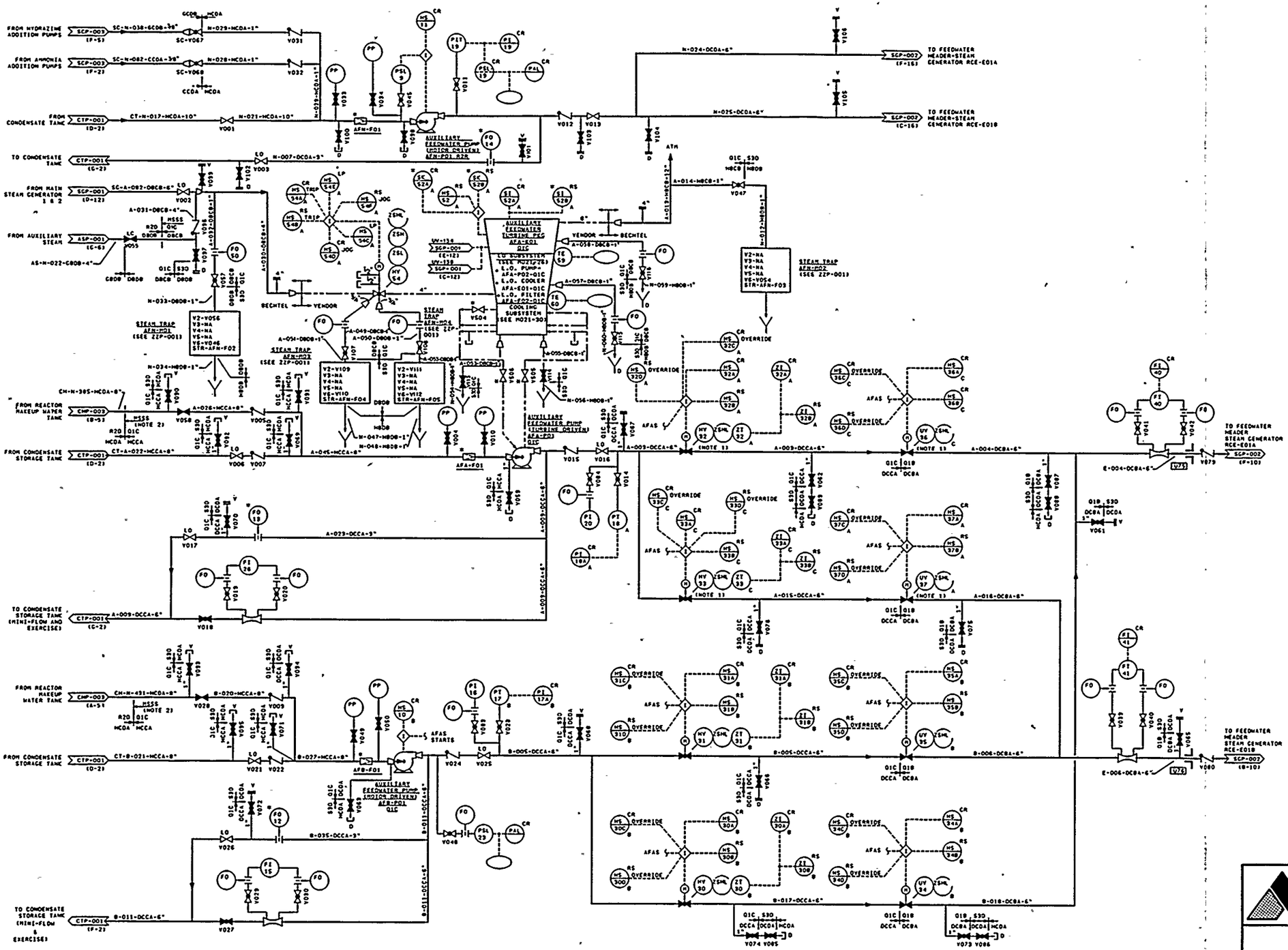

13-M-AFP-001 REV 5

Palo Verde Nuclear Generating Station

AUXILIARY FEEDWATER SYSTEM

Figure 2.1.7-1

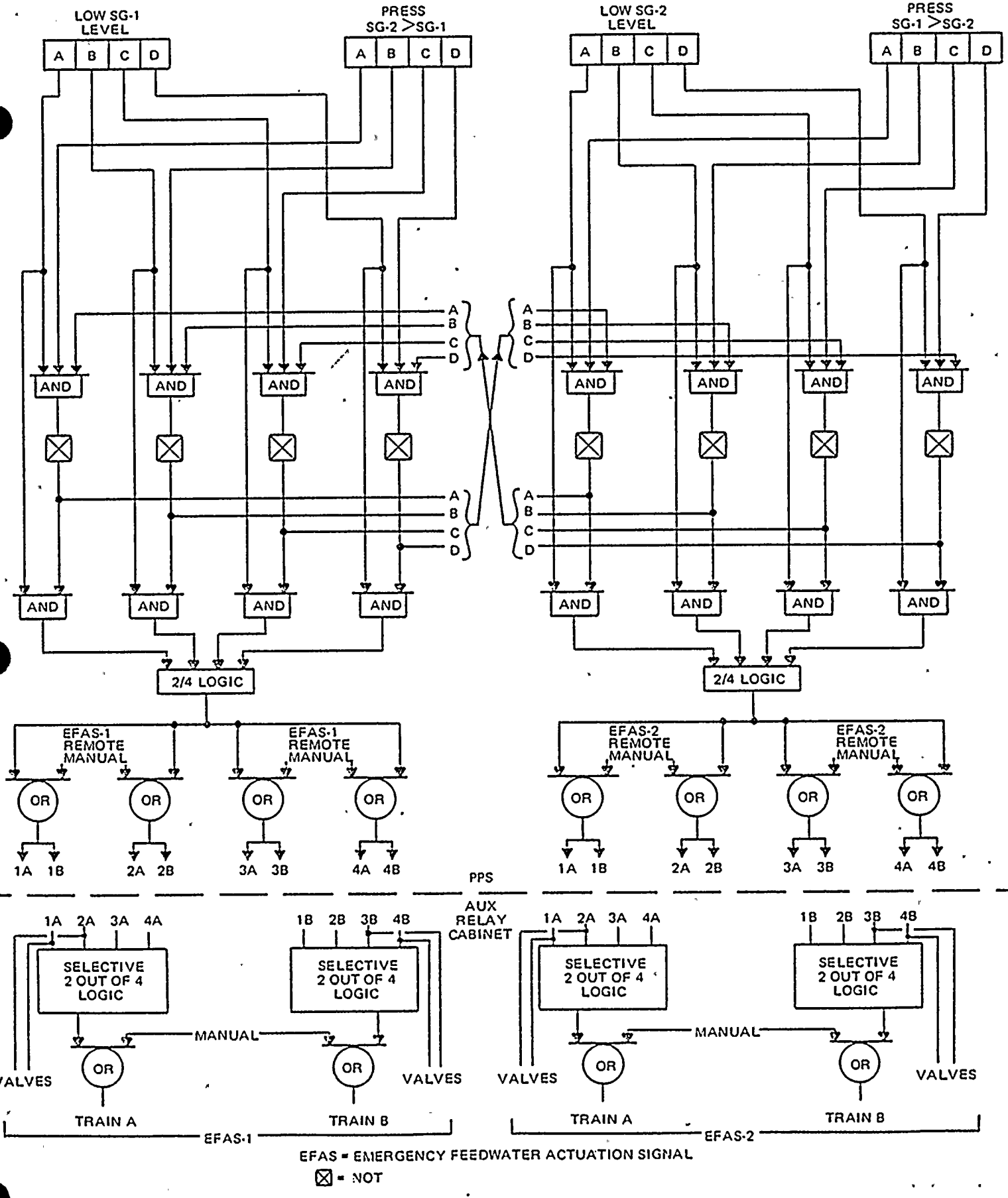

C-E SYSTEM 80	ESFAS SIGNAL LOGIC (EFAS 1, EFAS 2)	Figure 2.1.7-2

2.1.8.a

Improved Post-Accident Sampling Capability

2.1.8 INSTRUMENTATION TO FOLLOW THE COURSE OF AN ACCIDENT

2.1.8.a IMPROVED POST-ACCIDENT SAMPLING CAPABILITY

NUREG-0578 Position

A design and operational review of the reactor coolant and containment atmosphere sampling systems shall be performed to determine the capability of personnel to promptly obtain (less than 1 hour) a sample under accident conditions without incurring a radiation exposure to any individual in excess of 3 and 18 3/4 Rems to the whole body or extremities, respectively. Accident conditions should assume a Regulatory Guide 1.3 or 1.4 release of fission products. If the review indicates that personnel could not promptly and safely obtain the samples, additional design features or shielding should be provided to meet the criteria.

A design and operational review of the radiological spectrum analysis facilities shall be performed to determine the capability to promptly quantify (less that 2 hours) certain radioisotopes that are indicators of the degree of core damage. Such radionuclides are noble gases (which indicate cladding failure), iodines and cesiums (which indicate high fuel temperatures), and non-volatile isotopes (which indicate fuel melting). The initial reactor coolant spectrum should correspond to a Regulatory Guide 1.3 or 1.4 release.

The review should also consider the effects of direct radiation from piping and components in the auxiliary building and possible contamination and direct radiation from airborne effluents. If the review indicates that the analyses required cannot be performed in a prompt manner with existing equipment, then design modifications or equipment procurement shall be undertaken to meet the criteria.

In addition to the radiological analyses, certain chemical analyses are necessary for monitoring reactor conditions. Procedures shall be provided to perform boron and chloride chemical analyses assuming a highly radioactive initial sample (Regulatory Guide 1.3 or 1.4 source term). Both analyses shall be capable of being completed promptly; i.e., the boron sample analysis within an hour and the chloride sample analysis within a shift.

PVNGS Evaluation

An analysis of the design and operation of the reactor coolant and containment atmosphere sampling systems will be performed to ensure that samples can be obtained promptly (less than 1 hour) during accident conditions without exposure to any individual to greater than 3 and 18-3/4 Rems to the whole body or extremities, respectively. Any design or procedural changes will be implemented prior to PVNGS Unit 1 Operating License.

An analysis of PVNGS spectrum analysis facilities will be performed to ensure that the design allows prompt quantification (less than 2 hours) of previously prepared radioisotope samples that may be indicative of core damage. The assumed reactor coolant spectrum will correspond to a Regulatory Guide 1.3 or 1.4 release.

PVNGS chemical analysis facilities will be designed to allow prompt analysis of boron concentration (less than 1 hour) and chloride concentration (less than 8 hours) assuming a radioactive sample corresponding to a Regulatory Guide 1.3 or 1.4 release.

2.1.8.b

Increased Range of Radiation Monitors

2.1.8 INSTRUMENTATION TO FOLLOW THE COURSE OF AN ACCIDENT

2.1.8.b INCREASED RANGE OF RADIATION MONITORS

NUREG-0578 Position

The requirements associated with this recommendation should be considered as advanced implementation of certain requirements to be included in a revision to Regulatory Guide 1.97, "Instrumentation to Follow the Course of an Accident," which has already been initiated, and in other Regulatory Guides, which will be promulgated in the near-term.

1. Noble gas effluent monitors shall be installed with an extended range designed to function during accident conditions as well as during normal operating conditions; multiple monitors are considered to be necessary to cover the ranges of interest.
   a. Noble gas effluent monitors with an upper range capacity of 10^5 μCi/cc (Xe-133) are considered to be practical and should be installed in all operating plants.
   b. Noble gas effluent monitoring shall be provided for the total range of concentration extending from normal condition (ALARA) concentrations to a maximum of 10^5 μCi/cc (Xe-133). Multiple monitors are considered to be necessary to cover the ranges of interest. The range capacity of individual monitors should overlap by a factor of ten.

2. Since iodine gaseous effluent monitors for the accident condition are not considered to be practical at this time, capability for effluent monitoring of radioiodines for the accident condition shall be provided with sampling conducted by adsorption on charcoal or other media, followed by onsite laboratory analysis.

3. In-containment radiation level monitors with a maximum range of 10^8 rad/hr shall be installed. A minimum of two such monitors that are physically separated shall be provided. Monitors shall be designed and qualified to function in an accident environment.

PVNGS Evaluation

The PVNGS radiation monitoring system is a follows;

1. Noble gas effluent monitoring of the plant vent is presently designed to have an upper limit of 10^{-1} μCi/cc (Xe-133). Additional monitors will be added with an upper range of 10^4 μCi/cc (Xe-133). The range of the plant vent monitors shall overlap by at least a factor of ten.

2. Post-accident effluent monitoring of radioiodines is provided for by sampling of plant vent iodine monitor adsorption media followed by onsite laboratory analysis. Procedures for this sampling will be developed prior to Unit 1 Operating License.

3. The PVNGS power access purge monitors (two redundant, ESF monitors) are located around the power access purge duct adjacent to the containment. These monitors are capable of monitoring the purge duct during normal operation and the containment (through the containment wall) subsequent to an accident. When monitoring the containment radiation level these monitors will have a maximum range of at least 10^6 rad/hr. The monitors will be qualified to post-accident condition.
The design of the monitors will be evaluated further to determine if a maximum range of 10^8 rad/hr is achievable. This evaluation will be completed by March, 1981.

2.1.8.c

Improved In-Plant Iodine Instrumentation

2.1.8 INSTRUMENTATION TO FOLLOW THE COURSE OF AN ACCIDENT

2.1.8.c IMPROVED IN-PLANT IODINE INSTRUMENTATION

NUREG-0578 Position

Each licensee shall provide equipment and associated training and procedures for accurately determining the airborne iodine concentration in areas within the facility where personnel may be present during an accident.

PVNGS Evaluation

Prior to PVNGS Unit 1 Operating License, procedures will be implemented for determination of airborne iodine concentration by sampling iodine monitor cartridges for spectrum analysis. These procedures will be used when the plant radiation monitoring system indicates iodine levels requiring the use of respiratory equipment.

Spectral analysis equipment is available at each PVNGS unit.

2.1.9 ANALYSIS OF DESIGN AND OFF-NORMAL TRANSIENTS AND ACCIDENTS

NUREG-0578 Position

Analyses, procedures, and training addressing the following are required:

1. Small break loss-of-coolant accidents;
2. Inadequate core cooling; and
3. Transients and accidents.

Some analysis requirements for small breaks have already been specified by the Bulletins and Orders Task Force. These should be completed. In addition, pretest calculations of some of the Loss of Fluid Test (LOFT) small break tests (scheduled to start in September 1979) shall be performed as means to verify the analyses performed in support of the small break emergency procedures and in support of an eventual long term verification of compliance with Appendix K of 10 CFR Part 50.

In the analysis of inadequate core cooling, the following conditions shall be analyzed using realistic (best-estimate) methods:

1. Low reactor coolant system inventory (two examples will be required - LOCA with forced flow, LOCA without forced flow).
2. Loss of natural circulation (due to loss of heat sink).

These calculations shall include the period of time during which inadequate core cooling is approached as well as the

period of time during which inadequate core cooling exists. The calculations shall be carried out in real time far enough that all important phenomena and instrument indications are included. Each case should then be repeated taking credit for correct operator action. These additional cases will provide the basis for developing appropriate emergency procedures. These calculations should also provide the analytical basis for the design of any additional instrumentation needed to provide operators with an unambiguous indication of vessel water level and core cooling adequacy.

The analyses of transients and accidents shall include the design basis events specified in Section 15 of each FSAR. The analyses shall include a single active failure for each system called upon to function for a particular event. Consequential failures shall also be considered. Failures of the operators to perform required control manipulations shall be given consideration for permutations of the analyses. Operator actions that could cause the complete loss of function of a safety system shall also be considered. At present, these analyses need not address passive failures or multiple system failures in the short term. In the recent analysis of small break LOCAs, complete loss of auxiliary feedwater was considered. The complete loss of auxiliary feedwater may be added to the failures being considered in the analysis of transients and accidents if it is concluded

that more is needed in operator training beyond the short-term actions to upgrade auxiliary feedwater system reliability. Similarly, in the long term, multiple failures and passive failures may be considered depending in part on staff review of the results of the short-term analyses.

The transient and accident analyses shall include event tree analyses, which are supplemented by computer calculations for those cases in which the system response to operator actions is unclear of these calculations could be used to provide important quantitative information not available from an event tree. For example, failure to initiate high-pressure injection could lead to core uncovery for some transients, and a computer calculation could provide information on the amount of time available for corrective action. Reactor simulators may provide some information in defining the event trees and would be useful in studying the information available to the operators. The transient and accident analyses are to be performed for the purpose of identifying appropriate and inappropriate operator actions relating to important safety considerations such as natural circulation, prevention of core uncovery, and prevention of more serious accidents.

The information derived from the preceding analyses shall be included in the plant emergency procedures and operator training. It is expected that analyses performed by the NSSS vendors will be put in the form of emergency procedure guidelines and that the changes in the procedures will be implemented by each licensee of applicant.

In addition to the analyses performed by the reactor vendors, analyses of selected transients should be performed by the NRC Office of Research, using the best available computer codes, to provide the basis for comparisons with the analytical methods being used by the reactor vendors. These comparisons together with comparisons to data, including LOFT small break test data, will constitute the short-term verification effort to assure the adequacy of the analytical methods being used to generate emergency procedures.

PVNGS Evaluation

Arizona Public Service Company will work with Combustion Engineering to determine the generic analyses necessary for the System 80 design. The analyses will be performed on a schedule consistent with development of procedures, training of operator's installation of hardware (refer to Section 2.1.3) prior to PVNGS Unit 1 Operating License.

2.1.10 INSTRUMENTATION TO MONITOR CONTAINMENT CONDITIONS DURING THE COURSE OF AN ACCIDENT

NUREG-0578 Position

Consistent with satisfying the requirements set forth in General Design Criterion 13 to provide the capability in the control room to ascertain containment conditions during the course of an accident, the following requirements shall be implemented:

1. A continuous indication of containment pressure shall be provided in the control room. Measurement and indication capability shall include three times the design pressure of the containment for concrete, four times the design pressure for steel, and minus five psig for all containments.
2. A continuous indication of hydrogen concentration in the containment atmosphere shall be provided in the control room. Measurement capability shall be provided over the range of 0 to 10% hydrogen concentration under both positive and negative ambient pressure.
3. A continuous indication of containment water level shall be provided in the control room for all plants. A narrow range instrument shall be provided for PWRs and cover the range from the bottom to the top of the normal containment sump. Also for PWRs, a wide range instrument shall be provided and cover the range

from the bottom of the containment to the elevation equivalent to a 500,000 gallon capacity. For BWRs, a wide range instrument shall be provided and cover the range from the bottom to 5 feet above the normal water level of the suppression pool.

The containment pressure, hydrogen concentration and wide range containment water level measurements shall meet the design and qualification provisions of Regulatory Guide 1.97, including qualification, redundancy, and testibility. The narrow range containment water level measurement instrumentations shall be qualified to meet the requirements of Regulatory Guide 1.89 and shall be capable of being periodically tested.

PVNGS Evaluation

PVNGS containment monitoring instrumentation is as follows:

1. Eight, Class IE containment pressure indicators are provided in the control room. Four indicators have a -4 to 20 psig range. The other four indicators have a -4 to 85 psig range.

   An analysis performed for the containment maximum negative pressure (refer to FSAR Section 6.2.1.1.3.6) demonstrates a maximum credible negative pressure of -2.6 psig. The existing pressure indicator range (to -4 psig) is, therefore, considered adequate to measure containment negative pressure under any postulated conditions.

The containment is designed for 60 psig internal pressure and tested to 69 psig. The maximum calculated containment pressure under accident conditions is 49.2 psig. The existing pressure indicator range (to 85 psig) provides a 40% margin above the containment design pressure and a 70% margin above the conservatively calculated peak pressure. Therefore, a containment pressure range greater than the existing 85 psig maximum is not considered to be necessary.

The addition of monitors with a range to 180 psig would add unnecessary confusion to the available containment pressure instrumentation by:

a. Displaying at only 25% of span during the worst postulated accident.

b. Displaying containment pressure with an accuracy of only $\pm$3.6 psi ($\pm$2%).

2. A continuous indication of hydrogen concentration is available in the control room. Two Class IE redundant monitors are presently provided with a range of 0-10%. The hydrogen monitors are manually initiated following a LOCA. Once initiated, they provide a continuous measurement of hydrogen concentration (refer to Figure 2.1.5-1).

3. Continuous indication of containment water level will be provided for PVNGS. An evaluation will be performed to determine the design requirements for this instrumentation. The results of this evaluation will be presented to the NRC staff by March, 1981.

2.1.11 INSTALLATION OF REMOTELY OPERATED HIGH POINT VENTS IN THE REACTOR COOLANT SYSTEM

NUREG-0578 Position

Each applicant and licensee shall install reactor coolant system and reactor vessel head high point vents remotely operated from the control room. Since these vents form a part of the reactor coolant pressure boundary, the design of the vents shall conform to the requirements of Appendix A to 10 CFR Part 50 General Design Criteria. In particular, these vents shall be safety grade, and shall satisfy the single failure criterion and the requirements of IEEE-279 in order to ensure a low probability of inadvertent actuation.

Each applicant and licensee shall provide the following information concerning the design and operation of these high point vents:

1. A description of the construction, location, size, and power supply for the vents, along with results of analyses of loss-of-coolant accidents initiated by a break in the vent pipe. The results of the analyses should be demonstrated to be acceptable in accordance with the acceptance criteria of 10 CFR 50.46.

2. Analyses demonstrating that the direct venting of non-condensable gases with perhaps high hydrogen concentrations does not result in violation of combustible gas concentration limits in containment as described in 10 CFR Part 50.44, Regulatory Guide 1.7 (Rev. 1), and Standard Review Plan Section 6.2.5.

3. Procedural guidelines for the operators' use of the vents. The information available to the operator for initiating or terminating vent usage shall be discussed.

PVNGS Evaluation

PVNGS will utilize existing penetrations on the pressurizer and reactor vessel head to provide high point venting of the Reactor Coolant System (RCS). Refer to Figure 2.1.11-1 for a schematic of the RCS. The pressurizer vent (refer to Figure 2.1.11-2) penetrates the top of the pressurizer and is currently utilized for steam space sampling. The reactor vessel head vent (refer to Figure 2.1.11-2) penetrates the top of the reactor vessel head and is currently piped to the Reactor Drain Tank (RDT), within containment, via a manual valve. Piping and valves will be provided to allow remote operation of the pressurizer and reactor vessel vents from the control room. In order to ensure a low probability of inadvertent action, valves and controls will satisfy the single failure criterion and IEEE-279-1971.

The following information will be supplied as the RCS Vent System design is finalized (prior to Unit 1 Operating License):

1. A description of the vents, piping, valves and controls utilized for the RCS Vent System. An analysis demonstrating the acceptability of a vent piping break in accordance with 10 CFR 50.46.

2. An analysis demonstrating that the venting of RCS non-condensable gases via the RCS Venting System does not result in containment hydrogen concentrations greater than those allowed by 10 CFR 50.44, Regulatory Guide 1.7, Revision 0 and Standard Review Plan 6.2.5.

3. Operating procedures for use of the RCS Vent System.

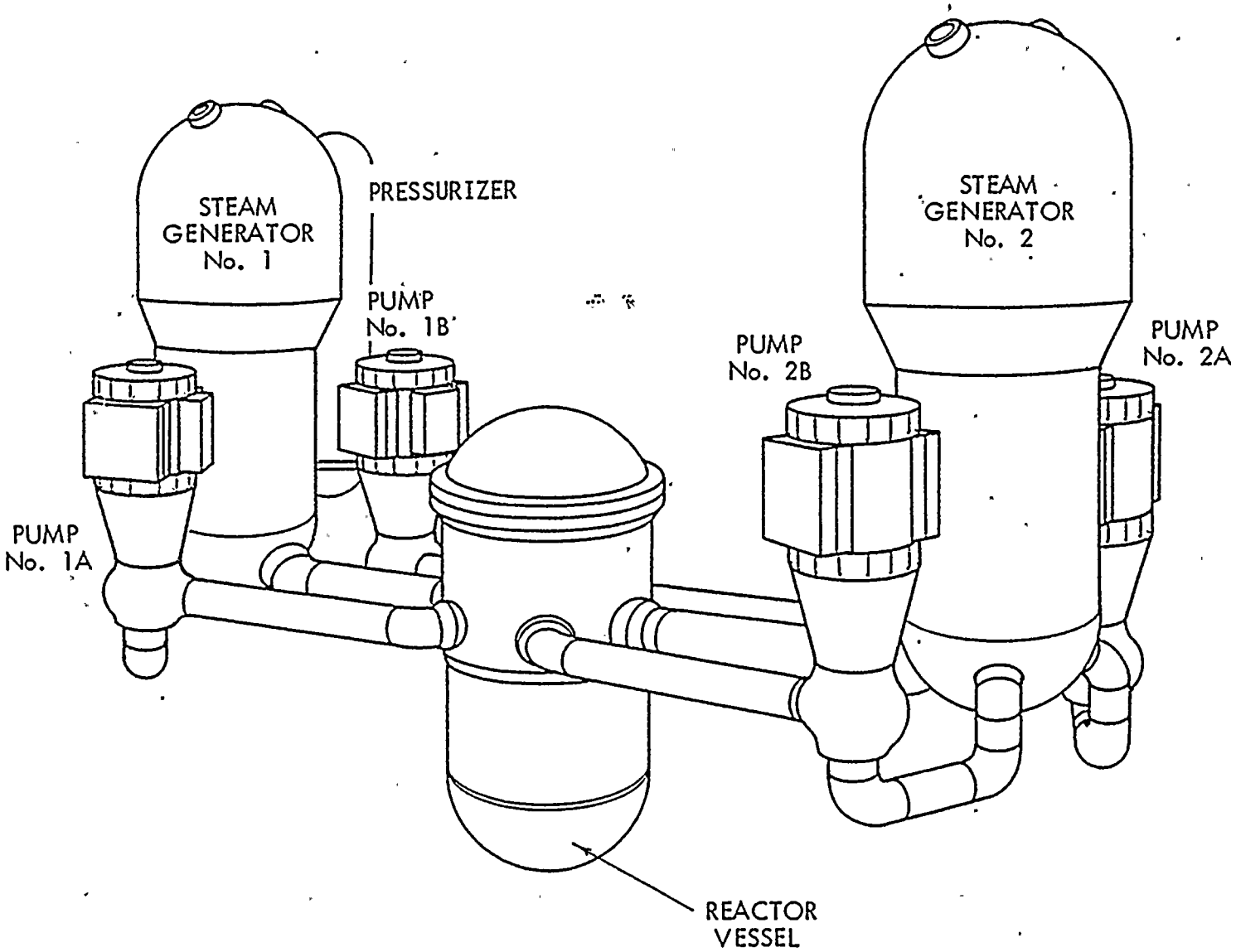

C - E System 80	ISOMETRIC VIEW OF THE REACTOR COOLANT SYSTEM	Figure 2.1.11-1

Shift Supervisors Responsibilities

2.2.1 IMPROVED REACTOR OPERATIONS COMMAND FUNCTION

2.2.1.a SHIFT SUPERVISORS RESPONSIBILITIES

NUREG-0578 Position

1. The highest level of corporate management of each licensee shall issue and periodically reissue a management directive that emphasizes the primary management responsibility of the shift supervisor for safe operation of the plant under all conditions on his shift and that clearly establishes his command duties.

2. Plant procedures shall be reviewed to assure that the duties, responsibilities, and authority of the shift supervisor and control room operators are properly defined to effect the establishment of a definite line of command and clear delineation of the command decision authority of the shift supervisor in the control room relative to other plant management personnel. Particular emphasis shall be placed on the following:

   a. The responsibility and authority of the shift supervisor shall be to maintain the broadest perspective of operational conditions affecting

the safety of the plant as a matter of highest priority at all times when on duty in the control room. The idea shall be reinforced that the shift supervisor should not become totally involved in any single operation in times of emergency when multiple operations are required in the control room.

b. The shift supervisor, until properly relieved, shall remain in the control room at all times during accident situations to direct the activities of control room operators. Persons authorized to relieve the shift supervisor shall be specified.

c. If the shift supervisor is temporarily absent from the control room during routine operations, a lead control room operator shall be designated to assume the control room command function. These temporary duties, responsibilities, and authority shall be clearly specified.

3. Training programs for shift supervisors shall emphasize and reinforce the responsibility for safe operation and the management function the shift supervisor is to provide for assuring safety.

PVNGS Evaluation

The responsibilities and authority of the Shift Supervisor is delineated in FSAR Chapter 13.1. In addition, the Station Manual and the Operating Department Program also prescribe responsibilities and authority of the Shift Supervisor.

The shift organization at PVNGS is such that the Shift Foreman will perform many of the administrative functions that are normally completed during a shift.

2.2.1.b

Shift Technical Advisor

2.2.1 IMPROVED REACTOR OPERATIONS COMMAND FUNCTION

2.2.1.b SHIFT TECHNICAL ADVISOR

NUREG-0578 Position

Each licensee shall provide an on-shift technical advisor to the shift supervisor. The shift technical advisor may serve more than one unit at a multi-unit site if qualified to perform the advisor function for the various units.

The shift technical advisor shall have a bachelor's degree or equivalent in a scientific or engineering discipline and have received spycific training in the response and analysis of the plant for transients and accidents. The shift technical advisor shall also receive training in plant design and layout, including the capabilities of instrumentation and controls in the control room. The licensee shall assign normal duties to the shift technical advisors that pertain to the engineering aspects of assuring safe operations of the plant, including the review and evaluation of operating experience.

PVNGS Evaluation

There is sufficient time prior to PVNGS Unit 1 Operating License to assess fully the alternatives for providing

additional technical and analytical capability for diagnosis of off-normal events. Two alternatives considered by the Lessons Learned Task Force have merit for PVNGS:

1. Upgrade the requirements for operators to include more engineering and plant response training.
2. Improve plant response diagnosis capabilities by backfit of computer and plant status display innovations.

The PVNGS Operator Training Program will be revised and upgraded to include more engineering and plant response training. The PVNGS Training Simulator will be used extensively to accomplish this objective.

The PVNGS design already has incorporated some advanced informational displays. These include the Safety Equipment Status Panels, computer-generated graphics displays and the various information displays which can be generated by the Core Monitoring Computer and the Plant Monitoring Computer.

2.2.1.c

Shift Relief and Turnover Procedure

2.2.1 IMPROVED REACTOR OPERATIONS COMMAND FUNCTION

2.2.1.c SHIFT RELIEF AND TURNOVER PROCEDURE

NUREG-0578 Position

The licensees shall review and revise as necessary the plant procedure for shift and relief turnover to assure the following:

1. A checklist shall be provided for the oncoming and offgoing control room operators and the oncoming shift supervisor to complete and sign. The following items, as a minimum, shall be included in the checklist:

   a. Assurance that critical plant parameters are within allowable limits (parameters and allowable limits shall be listed on the checklist).

   b. Assurance of the availability and proper alignment of all systems essential to the prevention and mitigation of operational transients and accidents by a check of the control console (what to check and criteria for acceptable status shall be included on the checklist);

c. Identification of systems and components that are in a degraded mode of operation permitted by the Technical Specifications. For such systems and components, the length of time in the degraded mode shall be compared with the Technical Specifications action statement (this shall be recorded as a separate entry on the checklist).

2. Checklists or logs shall be provided for completion by the offgoing and oncoming auxiliary operators and technicians. Such checklists or logs shall include any equipment under maintenance of test that by themselves could degrade a system critical to the prevention and mitigation of operational transients and accidents or initiate an operational transient (what to check and criteria for acceptable status shall be included on the checklist); and

3. A system shall be established to evaluate the effectiveness of the shift and relief turnover procedure (for example, periodic independent verification of system alignments).

PVNGS Evaluation

PVNGS will have a procedure for shift relief which will include the use of checklists and the review of operating

logs. The relieving operator or supervisor will be required to sign that he has read the appropriate logs and completed the watch turnover as specified in the procedure.

Provisions will be made for periodic verification of the relief and turnover procedure.

The shift relief and turnover procedure and the provisions for its periodic verification will be prepared and implemented prior to PVNGS Unit 1 Operating License.

2.2.2.a

Control Room Access

2.2.2 IMPROVED IN-PLANT EMERGENCY PROCEDURES AND PREPARATIONS

2.2.2.a CONTROL ROOM ACCESS

NUREG-0578 Position

The licensee shall make provisions for limiting access to the control room to those individuals responsible for the direct operation of the nuclear power plant (e.g., operations supervisor, shift supervisor, and control room operators), to technical advisors who may be requested or required to support the operation, and to predesignated NRC personnel. Provisions shall include the following:

1. Develop and implement an administrative procedure that establishes the authority and responsibility of the person in charge of the control room to limit access.

2. Develop and implement procedures that establish a clear line of authority and responsibility in the control room in the event of an emergency. The line of succession for the person in charge of the control room shall be established and limited to persons possessing a current senior reactor operator's license. The plan shall clearly define the lines of communication and authority for plant management personnel not in direct command of operations, including those who report to stations outside of the control room.

PVNGS Evaluation

Prior to PVNGS Unit 1 Operating License, administrative procedures will be developed to limit personnel access to the unit control room during operational transient and accident conditions. These procedures will delineate:

1. That the shift supervisor has the authority to restrict control room access to personnel responsible for plant operations and technical advisory support to operations.

2. Clear lines of communications, authority, and responsibilities in the event of an emergency. Only senior licensed operators will direct the licensed operators.

2.2.2.b

Onsite Technical Support Center

2.2.2 IMPROVED IN-PLANT EMERGENCY PROCEDURES AND PREPARATIONS

2.2.2.b ONSITE TECHNICAL SUPPORT CENTER

NUREG-0578 Position

Each operating nuclear power plant shall maintain an onsite technical support center separate from and in close proximity to the control room that has the capability to display and transmit plant status to those individuals who are knowledgeable of and responsible for engineering and management support of reactor operations in the event of an accident. The center shall be habitable to the same degree as the control room for postulated accident conditions. The licensee shall revise his emergency plans as necessary to incorporate the role and location of the technical support center.

Records that pertain to the as-built conditions and layout of structures, systems and components shall be stored and filed at the site and accessible to the technical support center under emergency conditions. Examples of such records include a system description, general arrangement drawings, piping and instrumentation diagrams, piping system isometrics, electrical schematics, wire and cable lists, and single line electrical diagrams. It is not intended that all records described in ANSI 45.2.9-1974 be stored and filed at the site

and accessible to the technical support center under emergency conditions; however, as stated in that standard, storage systems shall provide for accurate retrieval of all information without undue delay.

PVNGS Evaluation

An Onsite Technical Support Center for Palo Verde Nuclear Generating Station will be established prior to PVNGS Unit 1 Operating License. This center will be located within the site boundary and will provide a work area for supervisory and technical personnel from Arizona Public Service Company and the NRC. It will have communications with the control room and the other response centers. An analysis will be performed to determine equipment to be incorporated into the center to monitor and display the status of the affected unit. The center will be habitable to permit occupancy following a loss of coolant accident. As-built drawings and other appropriate records shall be available in readily retrievable form at the site and shall be accessible to the Onsite Technical Support Center.

The Palo Verde Nuclear Generating Station Emergency Plan will be revised to describe the Onsite Technical Support Center and its function.

2.2.2.c

Onsite Operational Support Center

2.2.2 IMPROVED IN-PLANT EMERGENCY PROCEDURES AND PREPARATIONS

2.2.2.c ONSITE OPERATIONAL SUPPORT CENTER

NUREG-0578 Position

An area to be designated as the Onsite Operational Support Center shall be established. It shall be separate from the control room and shall be the place to which the operations support personnel will report in an emergency situation. Communications with the control room shall be provided. The Emergency Plan shall be revised to reflect the existence of the center and to establish the methods and lines of communication and management.

PVNGS Evaluation

Prior to PVNGS Unit 1 Operating License, an area separate from the unit control rooms will be designated as the PVNGS Onsite Operational Support Center prior to receipt of operating license. This will be an assembly area where plant operations support personnel will report in an emergency situation for further orders or assignment. The Operational Support Center will have communication with the control room and the Emergency Control Center (refer to the PVNGS Emergency Plan).

The Emergency Plan will reflect the existence of the Operational Support Center and will establish the methods and lines of communication and management.

2.2.3 REVISED LIMITING CONDITIONS FOR OPERATION OF NUCLEAR POWER PLANTS BASED UPON SAFETY SYSTEM AVAILABILITY

NUREG-0578 Position

All NRC nuclear power plant licensees shall provide information to define a limiting operational condition based on a threshold of complete loss of safety function. Identification of a human or operational error that prevents or could prevent the accomplishment of a safety function required by NRC regulations and analyzed in the license application shall require placement of the plant in a hot shutdown condition within 8 hours and in a cold shutdown condition within 24 hours.

The loss of operability of a safety function shall include consideration of the necessary instrumentation, controls, emergency electrical power sources, cooling or seal water, lubrication, operating procedures, maintenance procedures, test procedures and operator interface with the system, which must also be capable of performing their auxiliary or supporting functions. The limiting conditions for operation shall define the minimum safety functions for modes 1, 2, 3, 4, and 5 of operation.

The limiting conditions of operation shall require the following:

1. If the plant is critical, restore the safety function (if possible) and place the plant in a hot shutdown condition within 8 hours.

2. Within 24 hours, bring the plant to cold shutdown.

3. Determine the cause of the loss of operability of the safety function. Organizational accountability for the loss of operability of the safety system shall be established.

4. Determine corrective actions and measures to prevent recurrence of the specific loss of operability for the particular safety function and generally for any safety function.

5. Report the event within 24 hours by telephone and confirm by telegraph, mailgram, or facsimile transmission to the Director of the Regional Office, or his designee.

6. Prepare and deliver a Special Report to the NRC's Director of Nuclear Reactor Regulation and to the Director of the appropriate regional office of the Office of Inspection and Enforcement. The report shall contain the results of Steps 3 and 4 above,

along with a basis for allowing the plant to return to power operation. The senior corporate executive of the licensee responsible and accountable for safe plant operation shall deliver and discuss the contents of the report in a public meeting with the Office of Nuclear Reactor Regulation and the Office of Inspection and Enforcement at a location to be chosen by the Director of Nuclear Reactor Regulation.

7. A finding of adequacy of the licensee's Special Report by the Director of Nuclear Reactor Regulation will be required before the licensee returns the plant to power.

PVNGS Evaluation

In his August 20, 1979 memorandum to the NRC Commissioners, Harold R. Denton, Director, Office of Nuclear Reactor Regulatory, announced his intent to initiate a rulemaking proposal on limiting conditions of operations, which would include consideration of the recommendations of the Lessons Learned Task Force and alternative approaches. APS will follow this proposal with great interest and will participate in any rulemaking proceedings that may be instituted.

Superseded per Amdt 1 to LLER dtd 8-3-81

50-528

I.C OPERATING PROCEDURES

I.C.1 GUIDANCE FOR THE EVALUATION AND DEVELOPMENT OF PROCEDURES FOR TRANSIENTS AND ACCIDENTS

Position

In letters of September 13 and 27, October 10 and 30, and November 9, 1979, the Office of Nuclear Reactor Regulation required licensees of operating plants, applicants for operating licenses and licensees of plants under construction to perform analyses of transients and accidents, prepare emergency procedure guidelines, upgrade emergency procedures, including procedures for operating with natural circulation conditions, and to conduct operator retraining (see also item I.A.2.1). Emergency procedures are required to be consistent with the actions necessary to cope with the transients and accidents analyzed. Analyses of transients and accidents were to be completed in early 1980 and implementation of procedures and retraining were to be completed 3 months after emergency procedure guidelines were established; however, some difficulty in completing these requirements has been experienced. Clarification of the scope of the task and appropriate schedule revisions are being developed. In the course of review of these matters on Babcock and Wilcox (B&W)-designed plants, the staff will follow up on the bulletin and orders matters relating to analysis methods and results, as listed in NUREG-0660, Appendix C (see

Table C.1, Items 3, 4, 16, 18, 24, 25, 26, 27; Table C.2, Items 4, 12, 17, 18, 19, 20; and Table C.3, Items 6, 35, 37, 38, 39, 41, 47, 55, 57).

PVNGS Evaluation

Arizona Public Service Company (APS) has participated in C-E Owners Group activities conducted since the Three Mile Island accident to develop improved emergency procedure guidelines and associated supporting analyses. The C-E Owners Group has completed numerous documents which have been submitted to the NRC for review. The C-E Owners Group is currently sponsoring further activities which will be completed in the first half of 1981 and documented at that time. A summary of results obtained to date and current activities is provided below.

The initial C-E Owners Group analysis of Inadequate Core Cooling (ICC) is documented in Report CEN-117, "Inadequate Core Cooling - A Response to NRC IE Bulletin 79-06C, Item 6 for Combustion Engineering Nuclear Steam Supply Systems." This report was submitted to the NRC staff for review on October 31, 1979, by the C-E Owners Group.

"Operational Guidance for Inadequate Core Cooling" was prepared by the C-E Owners Group based on the analyses in Report CEN-117. This operational guidance was distributed to members of the C-E Owners Group for their use in review and possible revision of plant emergency procedures in December, 1979. A copy of

emergency procedure guidelines are documented in Report CEN-128. This report was submitted to the NRC staff for review on April 1, 1980.

The emergency procedure guidelines contained in Report CEN-128 were prepared based on extensive reviews of existing emergency procedures, past safety and design analyses, the plant simulation and sequence of events analyses in CEN-128, and interviews with operations personnel at plants with operating C-E reactors. These emergency procedure guidelines were prepared to be used as a basis for reviewing and revising, if necessary, existing plant emergency procedures. APS is using these guidelines to develop PVNGS emergency procedures where appropriate.

The NRC staff in a letter dated July 17, 1980, sent questions to the C-E Owners Group concerning the emergency procedure guidelines documented in Report CEN-128. A meeting was held with the NRC staff in Bethesda, Maryland on September 11, 1980, to discuss these questions and answers to them. The C-E Owners Group is presently preparing answers to these questions and revisions to the emergency procedure guidelines in Report CEN-128 as are appropriate. A preliminary response to these questions was submitted by the C-E Owners Group to the NRC staff in a letter dated December 10, 1980. The remaining responses were submitted to the NRC staff by the C-E Owners Group in a meeting on January 30, 1981.

Since early 1980, the C-E Owners Group has conducted an extensive evaluation of specific technical characteristics of emergency procedure guidelines. These include (1) the diagnostic guidance to be provided in emergency procedure guidelines, (2) the need for a separate guideline for inadequate core cooling, and (3) the format for presentation of emergency guidance. This evaluation is currently scheduled to be completed in the first quarter of 1981. The results of this evaluation will serve as one basis for possible revision of emergency procedure guidelines contained in Report CEN-128.

The C-E Owners Group agreed on December 3, 1980, to conduct a series of workshops concerning emergency procedure guidelines in early 1981. The first such work shops were conducted in January, February, and March 1981. Another workshop is planned for April 1981. These workshops are intended to provide a formal process by which the emergency procedure guidelines documented in Report CEN-128 will be revised to account for multiple failure considerations. Input to these workshops will be provided by the analysis and emergency procedure guidelines studies which have been conducted by the C-E Owners Group since early 1980. The workshops are to be attended by staff personnel from C-E and from utilities which own C-E reactors. These workshops will also provide the opportunity to explore multiple-failure scenarios beyond those which have been currently identified in the C-E Owners Group analyses of transients and accidents. LOCA will also be considered in these workshops.

Following the completion of the studies currently being conducted by the C-E Owners Group and the emergency procedure guidelines workshops, a revised set of emergency procedure guidelines will be submitted for review to the NRC staff by the C-E Owners Group. The C-E Owners Group held a meeting with the NRC Divisions of Systems Integration and Human Factors Safety on January 30, 1981, to discuss the process being used for revision of emergency procedure guidelines. As discussed in that meeting, the revised emergency procedure guidelines are currently scheduled to be submitted for review to the NRC staff by the C-E Owners Group on June 1, 1981.

The C-E Owners Group has initiated an effort to define the process by which plant emergency procedures should be developed or modified using emergency procedure guidelines and supporting analyses. This C-E Owners Group activity is scheduled to be completed by May 1, 1981.

Following completion of the NRC review of the revised emergency procedure guidelines to be submitted by the C-E Owners Group on June 1, 1981, and completion of the C-E Owners Group activities to define the process for development or revision of plant emergency procedures, APS will evaluate the need for revision of its plant emergency procedures. The schedule for such revision, if it is necessary, will be developed at that time.

I.D. CONTROL ROOM DESIGN

I.D.1 CONTROL-ROOM DESIGN REVIEWS

Position

In accordance with Task Action Plan I.D.1, Control Room Design Reviews (NUREG-0660), all licensees and applicants for operating licenses will be required to conduct a detailed control-room design review to identify and correct design deficiencies. This detailed control-room design review is expected to take about a year. Therefore, the Office of Nuclear Reactor Regulation (NRR) requires that those applicants for operating licenses who are unable to complete this review prior to issuance of a license make preliminary assessments of their control rooms to identify significant human factors and instrumentation problems and establish a schedule approved by NRC for correcting deficiencies. These applicants will be required to complete the more detailed control room reviews on the same schedule as licensees with operating plants.

PVNGS Evaluation

Arizona Public Service (APS) formed a Control Room Design Review (CRDR) Management Team (Team) and is performing a preliminary assessment of the PVNGS control room. The Team is comprised of APS engineering, APS operations, Bechtel Power Corporation (BPC) engineering, and BPC consultant, Torrey Pines Technology (TPT) of San Diego, California.

The early part of this effort was divided into three phases. Phase I of the study developed the guidelines to be used while conducting the CRDR from NRC control room audit reports of other utility facilities and NUREG/CR-1580.

Phase II of the study consisted of the detailed data taking effort and the identification of human factors deficiencies. The three task areas addressed were human factors, systems factors, and operator preparedness factors. The deficiencies identified were analyzed for proper resolution and assigned priorities to assist in determining a schedule for implementation.

Phase III, which is currently in progress, includes preparation and publication of a preliminary report.

Because of the stage of development of emergency operating procedures (EOPs), that portion of the CRDR involving the walk-through and videotaping of EOPs will start in the third quarter of 1981. When this later part of the CRDR is completed, a final report for submittal to the NRC will be prepared. The submittal date is targeted for December, 1981.

The review has resulted in APS initiating implementation of the following to date:

- Color demarcation
- Instrument relocation
- Alarm prioritization
- Additional instrumentation

I.D.2 PLANT SAFETY PARAMETER DISPLAY CONSOLE

Position

In accordance with Task Action Plan I.D.2, Plant Safety Parameter Display Console (NUREG-0660), each applicant and licensee shall install a safety parameter display system (SPDS) that will display to operating personnel a minimum set of parameters which define the safety status of the plant. This can be attained through continuous indication of direct and derived variables as necessary to assess plant safety status.

PVNGS Evaluation

A plant safety parameter display system (SPDS) is being developed to display to operating personnel a minimum set of parameters which define the safety status of the plant. The SPDS will provide continuous indication of direct and derived variables. The requirements of NUREG-0696 will be utilized in development of the SPDS. The SPDS will be provided and installed using the guidance of NUREG-0696. A schedule will be developed consistent with the operating license review process.

II. SITING AND DESIGN

II.B CONSIDERATION OF DEGRADED OR MELTED CORES IN SAFETY REVIEW

II.B.1 REACTOR COOLANT SYSTEM VENTS

Position

Each applicant and licensee shall install reactor coolant system (RCS) and reactor vessel head high point vents remotely operated from the control room. Although the purpose of the system is to vent noncondensible gases from the RCS which may inhibit core cooling during natural circulation, the vents must not lead to an unacceptable increase in the probability of a loss-of-coolant accident (LOCA) or a challenge to containment integrity. Since these vents form a part of the reactor coolant pressure boundary, the design of the events shall conform to the requirements of Appendix A to 10 CFR Part 50, "General Design Criteria." The vent system shall be designed with sufficient redundancy that assures a low probability of inadvertent or irreversible actuation.

Each licensee shall provide the following information concerning the design and operation of the high point vent system:

(1) Submit a description of the design, location, size, and power supply for the vent system along with results of analyses for loss-of-coolant accidents initiated by a break in the vent pipe. The results of the analyses

should demonstrate compliance with the acceptance criteria of 10 CFR 50.46.

(2) Submit procedures and supporting analysis for operator use of the vents that also include the information available to the operator for initiating or terminating vent usage.

PVNGS Evaluation

Refer to CESSAR Appendix B, Item II.B.1. In addition, Arizona Public Service Company has actively pursued a joint effort through the C-E Owners Group to develop a system design for a reactor coolant gas vent system for C-E plants, including design basis, system description, component requirements, operating guidelines, failure mode and effects analysis, and interface requirements. From this generic effort which has been completed, a system design specific to PVNGS is being developed.

The PVNGS system will utilize existing nozzles and piping on the pressurizer and reactor vessel head to provide high point venting of the reactor coolant system (RCS). Refer to FSAR Figure 5.1-1 for a P&ID of the RCS. The pressurizer vent penetrates the top of the pressurizer and is currently utilized for steam space sampling. The reactor vessel head vent penetrates the top of the reactor vessel and is currently isolated by a manual valve. Piping and valves will be provided to allow remote operation of the pressurizer and reactor vessel vents from the control room. The system will have venting capability to the reactor drain tank (RDT) and containment atmosphere. In order

to ensure availability and a low probability of inadvertent actuation, valves and controls will satisfy the single failure criterion for system operation. Valve position indication will be provided in the control room. The system will be seismically and environmentally qualified.

The following information will be provided as the RCS vent system design is finalized prior to Unit 1 fuel load:

1. A description of the design, location, size and power supply for the RCS vent system. The description will address compliance to 10 CFR 50.46.

2. Operating procedures for use of the reactor coolant vent system will be available onsite for NRC review.

3. Operating procedures to remove non-condensible gas from steam generator tubes will be available onsite for NRC review.

II.B.2 DESIGN REVIEW OF PLANT SHIELDING AND ENVIRONMENTAL QUALIFICATION OF EQUIPMENT FOR SPACES/SYSTEMS WHICH MAY BE USED IN POSTACCIDENT OPERATIONS

Position

With the assumption of a postaccident release of radioactivity equivalent to that described in Regulatory Guides 1.3 and 1.4 (i.e., the equivalent of 50% of the core radioiodine, 100% of the core noble gas inventory, and 1% of the core solids are contained in the primary coolant), each licensee shall perform a radiation and shielding-design review of the spaces around systems that may, as a result of an accident, contain highly radioactive materials. The design review should identify the location of vital areas and equipment, such as the control room, radwaste control stations, emergency power supplies, motor control centers, and instrument areas, in which personnel occupancy may be unduly limited or safety equipment may be unduly degraded by the radiation fields during postaccident operations of these systems.

Each licensee shall provide for adequate access to vital areas and protection of safety equipment by design changes, increased permanent or temporary shielding, or postaccident procedural controls. The design review shall determine which types of corrective actions are needed for vital areas throughout the facility.

PVNGS Evaluation

As part of the PVNGS design process before the incident at TMI-2, the shielding of areas that require personnel access for accident mitigation (such as the control room) was reviewed to determine that access would not be unduly limited. For maintenance actions, this review principally considered shielding separation between redundant ESF components to ensure that repairs to a failed component would not be unduly restricted by radiation from an operating component. In addition, as noted in FSAR Section 3.11, safety related equipment is qualified for the maximum expected radiation dose.

An analysis of the PVNGS shielding design is being performed to determine if TMI level source strengths would inhibit maintenance access or violate 10 CFR 50, Appendix A, General Design Criterion 19 (GDC 19). The analysis will also review equipment qualification dose limits in accordance with Commission Order and Memorandum CLI-80-21 and NUREG 0588. Specific shielding criteria have been established for systems outside containment that may function during a serious transient or accident and which may contain highly radioactive materials. These criteria are applicable to two categories of systems:

1. Systems required for plant shutdown or mitigation of an accident whose consequences may cause the system to contain highly radioactive materials.

2. Other systems directly connected to the reactor coolant system, containment sump or containment atmosphere which, while not expected to contain highly radioactive material, are postulated to contain such material.

Initial core releases used in the analyses are equivalent to those recommended in Regulatory Guides 1.4 and 1.7 and Standard Review Plan 15.6.5. Source term concentrations will be calculated for each release by considering conservative dilution volumes. As an example, spray system piping will be analyzed for a dilution volume that includes RCS volume, safety injection tank volume, refueling water tank volume, and spray system piping volume. Safety injection system or sampling system piping that could potentially circulate undiluted coolant from a degraded core inside of an intact primary system will be analyzed for RCS volume dilution only. Sump recirculation portions of the safety injection system would, however, be reviewed for full dilution (as with spray system).

The design will be evaluated based upon GDC 19. The following radiation limit guidelines will be used to evaluate occupancy and accessibility of plant vital areas:

1. Vital areas requiring continuous occupancy:

   The review shall verify that for vital areas such as control room and the onsite Technical Support Center, the direct dose rate shall not be more than 15 mr/h at all times from all sources.

2. Vital areas requiring infrequent access or passageways to these vital areas:

   The review will verify that for these areas the dose rate is less than 5 R/h. For dose rates greater than 100 mr/h a man-rem calculation, including time and motion analysis, will be performed to ensure that the integrated exposure for an operator action does not exceed 5 rem as given in GDC 19. For dose rates less than 100 mr/h, a man-rem calculation will not be performed.

Any increase in permanent or temporary shielding or procedural control determined to be necessary by the analyses will be completed prior to PVNGS Unit 1 fuel load.

II.B.3 POSTACCIDENT SAMPLING CAPABILITY

Position

A design and operational review of the reactor coolant and containment atmosphere sampling line systems shall be performed to determine the capability of personnel to promptly obtain (less than 1 hour) a sample under accident conditions without incurring a radiation exposure to any individual in excess of 3 and 18-3/4 rem to the whole body or extremities, respectively. Accident conditions should assume a Regulatory Guide 1.3 or 1.4 release of fission products. If the review indicates that personnel could not promptly and safely obtain the samples, additional design features or shielding should be provided to meet the criteria.

A design and operational review of the radiological spectrum analysis facilities shall be performed to determine the capability to promptly quantify (in less than 2 hours) certain radionuclides that are indicators of the degree of core damage. Such radionuclides are noble gases (which indicate cladding failure), iodines and cesiums (which indicate high fuel temperatures), and nonvolatile isotopes (which indicate fuel melting). The initial reactor coolant spectrum should correspond to a Regulatory Guide 1.3 or 1.4 release. The review should also consider the effects of direct radiation from piping and components in the auxiliary building and possible contamination and direct radiation from airborne effluents.

If the review indicates that the analyses required cannot be performed in a prompt manner with existing equipment, then design modifications or equipment procurement shall be undertaken to meet the criteria.

In addition to the radiological analyses, certain chemical analyses are necessary for monitoring reactor conditions. Procedures shall be provided to perform boron and chloride chemical analyses assuming a highly radioactive initial sample (Regulatory Guide 1.3 or 1.4 source term). Both analyses shall be capable of being completed promptly (i.e., the boron sample analysis within an hour and the chloride sample analysis within a shift).

PVNGS Evaluation

An analysis of the design and operation of the PVNGS sampling system is being performed to determine design changes that will reduce exposure during normal and post accident (highly radioactive sample) conditions. This analysis is considering the use of in-line chemical and radiological analyses of samples, as well as the use of syringe type sampling equipment for obtaining grab samples.

Required modifications will be completed prior to fuel load. Procedures for the operation of PVNGS sampling systems (including post accident conditions) will be in place prior to PVNGS Unit 1 fuel load.

II.D.3 DIRECT INDICATION OF RELIEF AND SAFETY-VALVE POSITION

Position

Reactor coolant system relief and safety valves shall be provided with a positive indication in the control room derived from a reliable valve-position detection device or a reliable indication of flow in the discharge pipe.

PVNGS Evaluation

PVNGS does not utilize power operated relief valves. The PVNGS primary code safety valves, located at the top of the pressurizer, are headered into the reactor drain tank (RDT) inside containment. Upstream of the common header each code safety valve is monitored for seal leakage by an in-line resistive-temperature device (RTD) (refer to FSAR Figure 5.1-1).

Indirect indication of code safety valve leakage is provided by an increase of RDT pressure and a decrease of pressurizer pressure and pressurizer level, monitored by safety-grade instrumentation.

Positive indication of safety valve position will be provided in the control room. The instrumentation will be environmentally qualified in compliance with Regulatory Guide 1.89. A plant annunciator alarm will be provided to alarm valve opening.

Installation of positive pressurizer safety valve position indication and development of emergency procedures will be completed prior to fuel loading of PVNGS Unit 1.

Table II.E.3.1-1

PVNGS PRESSURIZER HEATERS

Number of Heaters	Capacity (kW)	480V Bus	IE Power	IE Controls	SIAS Trip	Reset from Control Room
5-3 element groups	750	NGN-L11	No	No	No	N/A
5-3 element groups	750	NGN-L12	No	No	No	N/A
1-3 element groups	150	PGA-L33	Train A	Train A	Yes	No
1-3 element groups	150	PGB-L32	Train B	Train B	Yes	No

diesel generators are sized to accommodate this heater capacity concurrent with a forced shutdown or LOCA (refer to FSAR Table 8.3-3). In the event that heater capacity beyond that powered from a Class IE source (150 KW on each train) is required, heaters can be supplied from the non-Class IE power system that is fed from the offsite power system.

2. Heaters fed from the Class IE power system (300 kW) are automatically shed upon receipt of a loss of off-site power (LOP) or a safety injection actuation signal (SIAS). They may subsequently be manually reconnected to the ESF buses without shedding of any loads from the Class IE buses.

   Sufficient margin exists in each diesel generator for at least an additional 150 kW heater.

3. The redundant pressurizer heaters required for maintenance of natural circulation at hot standby are fed from Class IE buses via Class IE load side breakers qualified in accordance with safety-grade requirements.

   The PVNGS pressurizer heaters comply with the recommendations of NUREG-0737, November 1980.

II.E.4.1 DEDICATED HYDROGEN PENETRATIONS

Position

Plants using external recombiners or purge systems for post-accident combustible gas control of the containment atmosphere should provide containment penetration systems for external recombiner or purge systems that are dedicated to that service only, that meet the redundancy and single-failure requirements of General Design Criteria 54 and 56 of Appendix A to 10 CFR 50, and that are sized to satisfy the flow requirements of the recombiner or purge system.

The procedures for the use of combustible gas control systems following an accident that results in a degraded core and release of radioactivity to the containment must be reviewed and revised, if necessary.

PVNGS Evaluation

Redundant independent combustible gas control systems are provided. Each system has dedicated containment penetrations, external hydrogen monitors, and connection points for an external hydrogen recombiner. Two portable hydrogen recombiners will be onsite and available for connection to the affected unit. Either recombiner is capable of reducing hydrogen levels as noted in FSAR Section 6.2.5. The two systems are completely independent and meet single failure criteria.

An additional hydrogen reduction capability is provided by a charcoal filtered purge exhaust unit. This non safety grade unit can be connected to either set of gas control containment penetrations. This capability would only be utilized in the event of separate failures in both recombiner units.

The arrangement of these combustible gas control methods is shown in FSAR Figure 6.2.5-1.

Procedures for use of the PVNGS hydrogen control system following an accident resulting in a degraded core and release of radioactivity in the containment will be reviewed and revised if necessary.

Therefore, the PVNGS containment hydrogen control system complies with the recommendations of NUREG-0737.

Table II.E.4.2-1

ESSENTIAL SYSTEMS PENETRATING THE PVNGS CONTAINMENT

System	Normal Position	Post CIAS Position	Notes
HPSI	Closed	Closed	1
LPSI	Closed	Closed	1
Containment Spray	Closed	Closed	2
Recirculation Sump Suction	Closed	Closed	3
Long Term Recirculation	Closed	Closed	4
Auxiliary Feedwater	Closed	Closed	5
H_2 Control	Closed	Closed	4,7
Containment Pressure Sensor	Open	Open	6

1. Opens on Safety Injection Actuation Signal
2. Opens on Containment Spray Actuation Signal
3. Opens on Recirculation Actuation Signal
4. Manually opened from control room
5. Opens on Auxiliary Feedwater Actuation Signal
6. Function requires it to remain open
7. Isolates on CIAS

Table II.E.4.2-2

NON-ESSENTIAL SYSTEMS PENETRATING THE PVNGS CONTAINMENT (Sheet 1 of 2)

System	Normal Position	Post CIAS Position	Notes
Demineralized Water	C	C	Locked
Fire Protection	C	C	Locked
Shutdown Cooling	C	C	Locked
Pool Cooling	C	C	Locked
Fuel Transfer	C	C	Flanged
Containment Test	C	C	Flanged
Service Air	C	C	Locked
Integrated Leak Rate Test	C	C	Flanged
Personnel Lock	C	C	-
Equipment Hatch	C	C	-
Emergency Lock	C	C	-
Pressurizer Sample - Water	C	C	1
Pressurizer Sample - Steam	C	C	1
Hot Leg Sample	C	C	1
High Pressure Nitrogen	C	C	1
Containment Purge (Refueling)	C	C	1,2
Radiation Monitor	O	C	1
Low Pressure Nitrogen	O	C	1
Instrument Air	O	C	1
Nuclear Cooling Water	O	C	1
CVCS Letdown	O	C	1
Reactor Drain Tank (RDT) Vent	O	C	1
CVCS RDT Drain/Fill	O	C	1
Chilled Water	O	C	1
Power Access Purge	O	C	1,2
Containment Normal Sump	O	C	1
Main Steam	O	O	3
Main Feedwater	O	O	3
Steam Generator Blowdown	O	O	4
Steam Generator Blowdown Sample 1	C	C	4

II.F INSTRUMENTATION AND CONTROLS

II.F.1 ADDITIONAL ACCIDENT-MONITORING INSTRUMENTATION

ATTACHMENT 1, NOBLE GAS EFFLUENT MONITOR

Position

Noble gas effluent monitors shall be installed with an extended range designed to function during accident conditions as well as during normal operating conditions. Multiple monitors are considered necessary to cover the ranges of interest.

(1) Noble gas effluent monitors with an upper range capacity of 10^5 μCi/cc (Xe-133) are considered to be practical and should be installed in all operating plants.

(2) Noble gas effluent monitoring shall be provided for the total range of concentration extending from normal condition (as low as reasonably achievable (ALARA)) concentrations to a maximum of 10^5 μCi/cc (Xe-133). Multiple monitors are considered to be necessary to cover the ranges of interest. The range capacity of individual monitors should overlap by a factor of ten.

ATTACHMENT 2, SAMPLING AND ANALYSIS OF PLANT EFFLUENTS

Position

Because iodine gaseous effluent monitors for the accident condition are not considered to be practical at this time, capability for effluent monitoring of radioiodines for the accident condition shall be provided with sampling conducted

by adsorption on charcoal or other media, followed by onsite laboratory analysis.

ATTACHMENT 3, CONTAINMENT HIGH-RANGE RADIATION MONITOR

Position

In containment radiation-level monitors with a maximum range of 10^8 rad/hr shall be installed. A minimum of two such monitors that are physically separated shall be provided. Monitors shall be developed and qualified to function in an accident environment.

This requirement was revised in the October 30, 1979 letter from H.R. Denton to All Operating Nuclear Power Plants to provide for a photon-only measurement with an upper range of 10^7 R/hr.

ATTACHMENT 4, CONTAINMENT PRESSURE MONITOR

Position

A continuous indication of containment pressure shall be provided in the control room of each operating reactor. Measurement and indication capability shall include three times the design pressure of the containment for concrete, four times the design pressure for steel, and -5 psig for all containments.

ATTACHMENT 5, CONTAINMENT WATER LEVEL MONITOR

Position

A continuous indication of containment water level shall be provided in the control room for all plants. A narrow range instrument shall be provided for PWRs and cover the range from the bottom to the top of the containment sump. A wide range instrument shall also be provided for PWRs and shall cover the range from the bottom of the containment to the elevation equivalent to a 600,000 gallon capacity. For BWRs, a wide range instrument shall be provided and cover the range from the bottom to 5 feet above the normal water level of the suppression pool.

ATTACHMENT 6, CONTAINMENT HYDROGEN MONITOR

Position

A continuous indication of hydrogen concentration in the containment atmosphere shall be provided in the control room. Measurement capability shall be provided over the range of 0 to 10% hydrogen concentration under both positive and negative ambient pressure.

PVNGS Evaluation

Procedures for estimating noble gas, radioiodine, and particulate release rates are being developed in accordance with Revision 2 to Regulatory Guide 1.97.

Continuous indication in the control room is provided or will be provided prior to fuel load for the following parameters in accordance with Revision 2 to Regulatory Guide 1.97:

a. Containment pressure from minus 5 psig to three times the design pressure of the concrete containment at PVNGS

b. Containment water level from (1) the bottom to the top of each of two containment normal sumps, and (2) redundant instrumentation from the bottom of the containment to a level equivalent to 819,700 gallons, which corresponds to the maximum flood level

c. Containment atmosphere hydrogen concentration from 0 to 10 volume percent (will be available within 30 minutes of the initiation of safety injection)

d. Containment radiation up to 10^7 R/hr

e. Noble gas effluent from each potential release point from normal concentrations up to the limits specified in Revision 2 to Regulatory Guide 1.97 for each source.

Capability to continuously sample and perform onsite analysis of the radionuclide and particulate effluent samples will be provided in accordance with Revision 2 to Regulatory Guide 1.97.

A human factor analysis will be performed to ensure that the displays and controls added to accomplish this monitoring do not increase the potential for operator error (see section I.D.1).

II.F.2 INSTRUMENTATION FOR DETECTION OF INADEQUATE CORE COOLING

Position

Licensees shall provide a description of any additional instrumentation or controls (primary or backup) proposed for the plant to supplement existing instrumentation (including primary coolant saturation monitors) in order to provide an unambiguous, easy-to-interpret indication of inadequate core cooling (ICC). A description of the functional design requirements for the system shall also be included. A description of the procedures to be used with the proposed equipment, the analysis used in developing these procedures, and a schedule for installing the equipment shall be provided.

PVNGS Evaluation

Since early 1980, the C-E Owners Group has conducted an evaluation of response characteristics of instrumentation under conditions of inadequate core cooling. An outline of this evaluation was discussed with the NRC staff at a meeting in Bethesda, Maryland on May 28, 1980. The instruments whose response characteristics have been evaluated are the subcooled margin monitor, the heated junction (vessel level) thermocouple system, core exit (in-core) thermocouples, self-powered neutron detectors, hot leg resistance temperature detectors, and ex-core neutron detectors. This evaluation was completed in December 1980, and the results have recently been distributed to

members of the C-E Owners Group. Arizona Public Service Company (APS) is currently evaluating the results of the C-E Owners Group study to determine which instruments would be included in an instrumentation system for monitoring inadequate core cooling.

APS has participated over the past year in the C-E Owners Group development of a technique for measurement of water level in the reactor vessel. The technique which has been selected by the C-E Owners Group is use of heated junction thermocouples (HJTC) distributed at various radial and axial locations in the reactor vessel above the fuel alignment plate. The design objective of this system is to provide a measurement of the water inventory in the reactor vessel above the fuel alignment plate. The details of this design activity were discussed with the NRC staff at a meeting in Bethesda, Maryland on May 28, 1980. APS is evaluating the HJTC system as a possible component of an instrumentation system for monitoring inadequate core cooling.

APS is also currently investigating the feasibility of the differential pressure method of reactor vessel level measurement. This system is currently under development by Westinghouse Electric Corporation.

II.K.3.25 EFFECT OF LOSS OF ALTERNATING-CURRENT POWER ON PUMP SEALS

Position

The licensees should determine, on a plant-specific basis, by analysis or experiment, the consequences of a loss of cooling water to the reactor recirculation pump seal coolers. The pump seals should be designed to withstand a complete loss of alternating-current (ac) power for at least 2 hours. Adequacy of the seal design should be demonstrated.

PVNGS Evaluation

Refer to CESSAR Appendix B, Item II.K.3.2.5. In addition, the reactor coolant pump normal cooling water system (nuclear cooling water system) is backed up by the essential cooling water system to supply cooling water to the seals during loss of ac power. On loss of ac power the nuclear cooling water pumps will stop, but the redundant essential cooling water system, powered from the Class IE redundant power supplies, is available to supply the reactor coolant pump seals with cooling water. The essential cooling water system is described in the PVNGS FSAR Section 9.2.2.

(d) Remote interrogation of systems producing meteorological data and effluent transport and diffusion elements.

PVNGS Evaluation

(1) Comply with 10CFR50 Appendix E

The PVNGS Emergency Plan submitted with the FSAR complies with Appendix E, "Emergency Facilities" to 10 CFR Part 50 and to Regulation Guide 1.101 as discussed in FSAR Section 1.8.

The Arizona Division of Emergency Services is currently preparing a comprehensive emergency response plan for fixed nuclear facilities which will incorporate actions to be taken by levels of government within the State of Arizona. This plan is expected to meet the essential elements of NUREG-75/111 and is expected to be forwarded to FEMA for review prior to fuel loading of Unit 1.

(2) Comply with NUREG-0654

The PVNGS Emergency Plan is currently being revised and updated to address the emergency planning criteria contained in NUREG-0654, including the means for providing prompt notification to the public, staffing for emergencies, and an upgraded meteorological program. The comprehensive emergency response plan for fixed nuclear facilities currently being developed by the Arizona Division of Emergency

Services is expected to address the emergency planning criteria contained in NUREG-0654.

(3) Conduct Exercise

Prior to fuel loading of Unit 1, an emergency response exercise will be performed. The Arizona Division of Emergency Services will be invited to participate and major elements of both the PVNGS Emergency Plan and the state emergency response plan for fixed nuclear facilities will be tested.

(4) Meteorological Data

Response to this item is being evaluated.

III.A.1.2 UPGRADE EMERGENCY SUPPORT FACILITIES

Position (NRC letter, D.G. Eisenhut to All Licensees of Operating Plants and Holders of Construction Permits, dated February 18, 1981)

Each operating nuclear power plant shall maintain an onsite technical support center (TSC) separate from and in close proximity to the control room that has the capability to display and transmit plant status to those individuals who are knowledgeable of and responsible for engineering and management support of reactor operations in the event of an accident. The center shall be habitable to the same degree as the control room for postulated accident conditions. The licensee shall revise his emergency plans as necessary to incorporate the role and location of the TSC. Records that pertain to the as-built conditions and layout of structures, systems, and components shall be readily available to personnel in the TSC.

An operational support center (OSC) shall be established separate from the control room and other emergency response facilities as a place where operations support personnel can assemble and report in an emergency situation to receive instructions from the operating staff. Communications shall be provided between the OSC, TSC, EOF, and control room.

An emergency operating facility (EOF) will be operated by the licensee for continued evaluation and coordination of all licensee activities related to an emergency having or potentially having environmental consequences.

PVNGS Evaluation

Prior to PVNGS Unit 1 Operating License, an area separate from the unit control rooms will be designated as the PVNGS onsite Operational Support Center (OSC). This will be an assembly area where plant operations support personnel will report in an emergency situation for further orders or assignment. The OSC will have communication with the control room and the onsite Technical Support Center (TSC). Satellite TSCs will be established in each control room to facilitate face to face communications between control room personnel and support personnel. The satellite TSCs will have the same display capabilities as the main TSC.

The Emergency Plan will reflect the existence of the OSC and will establish the methods and lines of communication and management.

An onsite TSC and the satellite TSCs for Palo Verde Nuclear Generating Station will be established prior to fuel load. This Center will be located within the site protected area and will provide a work area for supervisory and technical personnel from Arizona Public Service Company and the NRC. It will have communications with the control room and the other response centers. An analysis will be performed to determine equipment to be incorporated into the Center to monitor and display the status of the affected unit. The Center will be habitable to permit occupancy following a loss of coolant accident. Monitoring equipment will be provided for direct and airborne radioactive

contaminants to provide warning if radiation levels in the TSC are reaching dangerous levels. As-built drawings and other appropriate records shall be available in readily retrievable form at the site and shall be accessible to the TSC.

The Palo Verde Nuclear Generating Station Emergency Plan will be revised to describe the TSC and its function.

An Emergency Operations Facility (EOF) for PVNGS will be established prior to PVNGS Unit 1 operating license. This facility will be located outside of the protected area and will provide space for operations personnel in support of the TSC. Plant personnel will be able to evaluate the magnitude and effect of radioactive releases from the plant and recommend appropriate protective measures. The facility will be habitable following a loss of coolant accident. A study will be conducted to determine analysis and monitoring equipment required. Communications with the TSC will be provided.

The EOF will provide space for recovery operations following an accident as well as training facilities for the site.

The PVNGS Emergency Plan will be revised to describe the EOF and it's functions.

The TSC will have permanently installed radiation monitoring and filtered ventilation systems. The nonredundant systems in conjunction with building shielding will ensure that the combined doses from airborne radioactivity and direct radiation meet GDC 19.

The EOF will have ventilation isolation capability and be shielded against direct radiation.

Display of data at the TSC and EOF will be in accordance with NUREG 0696.

Implementation of these items will be complete before PVNGS Unit 1 fuel load.

III.D RADIATION PROTECTION

III.D.1.1 INTEGRITY OF SYSTEMS OUTSIDE CONTAINMENT LIKELY TO CONTAIN RADIOACTIVE MATERIAL FOR PRESSURIZED-WATER REACTORS AND BOILING-WATER REACTORS

Position

Applicants shall implement a program to reduce leakage from systems outside containment that would or could contain highly radioactive fluids during a serious transient or accident to as-low-as-practical levels. This program shall include the following:

(1) Immediate leak reduction

(a) Implement all practical leak reduction measures for all systems that could carry radioactive fluid outside of containment.

(b) Measure actual leakage rates with system in operation and report them to the NRC.

(2) Continuing Leak Reduction -- Establish and implement a program of preventive maintenance to reduce leakage to as-low-as-practical levels. This program shall include periodic integrated leak tests at intervals not to exceed each refueling cycle.

PVNGS Evaluation

Refer to CESSAR Appendix B, Item III.D.1.1. In addition, a PVNGS design review was performed on the system below to assure that potential radioactive release paths following a serious transient or accident is reduced to as-low-as-reasonably achievable (ALARA) levels.

- Shutdown Cooling System (SCS)

  The existing design incorporates all-welded piping. Vent and drain lines throughout the system are capped when not in use. Relief valves on the system relieve to the equipment drain tank (a tank designed to accept radioactive fluids). The leakage from the LPSI pump seals and system valve stems is ALARA. Potential leakage from the SCS into the essential cooling water system (through the shutdown heat exchanger) can be detected during normal operation by installed radiation monitoring.

- Containment Spray Recirculation System (CS)

  The existing design incorporates all-welded piping. Vent and drain lines throughout the system are capped when not in use. Relief valves on the system (external to the containment) relieve to the equipment drain tank. The leakage from the CS pump seals and system valve stems is ALARA. Potential leakage during normal operation from the CS into the essential

cooling water system (through the shutdown heat exchanger) can be detected by installed radiation monitoring.

- CVCS Charging and Letdown System

The existing design incorporates all-welded piping. The letdown system is isolated upon CIAS and SIAS. Relief valves on the system relieve to the equipment drain tank.

The leakage from the CVCS charging pumps (positive displacement pumps) and other system equipment is ALARA as they are hard-piped to drains. The nuclear cooling water system is monitored for potential leakage from the CVCS through the letdown heat exchanger during normal operation.

- Sampling System

The existing design of the normal sampling system incorporates "Swagelok" connections, however, the design will be upgraded to all-welded piping for sections which would come into contact with highly radioactive fluids. The system is isolated upon CIAS and SIAS. Relief valves relieve to the equipment drain tank. Leakage from the system is also minimized by the small size of the lines.

The post-accident sampling system will also be constructed of all-welded piping.

- High-Pressure Injection Recirculation (HPSI)

  The design incorporates all-welded piping. Relief valves on the system (external to the containment) relieve to the equipment drain tank. The vent and drain lines throughout the system are capped when not in use. Leakage from the HPSI pump seals and system valve stems is as-low-as reasonably achievable. Miniflow connections to the refueling water tank (RWT) are isolated upon Recirculation Actuation Signal (RAS). Manual cross over valves to the CVCS are normally locked shut.

- Waste Gas System

  The waste gas system is isolated from the containment upon CIAS. (The normal vent path from the reactor drain tank (RDT) and the reactor head vent system is isolated.) By design, the introduction of highly radioactive fluids to the system is precluded.

- Other systems containing radioactive materials which are excluded from this program

  (1) Radioactive Waste Drain System (RDS):

  The RDS is isolated upon CIAS to ensure the liquid radwaste system will not become highly contaminated due to post-transient activities.

III.D.3.3 IMPROVED INPLANT IODINE INSTRUMENTATION UNDER ACCIDENT CONDITIONS

Position

(1) Each licensee shall provide equipment and associated training and procedures for accurately determining the airborne iodine concentration in areas within the facility where plant personnel may be present during an accident.

(2) Each applicant for a fuel-loading license to be issued prior to January 1, 1981 shall provide the equipment, training, and procedures necessary to accurately determine the presence of airborne radioiodine in areas within the plant where plant personnel may be present during an accident.

PVNGS Evaluation

Prior to fuel load, procedures will be developed for determining airborne iodine concentration. Charcoal cartridges will be used in conjunction with a portable pump or a fixed vacuum system. The cartridges will be removed to the counting laboratory for gamma spectrum analysis. Procedures will also define ALARA concepts for removal, transport, and analysis.

Superseded per Amdt 2 to LLIR dtd 11-2-81 50-528

I.A.1.3 SHIFT MANNING

Position

(1) Limit Overtime

Administrative procedures shall be established to limit maximum work hours of all personnel performing a safety-related function to no more than 12 hours of continuous duty with at least 12 hours between work periods, no more than 72 hours in any 7-day period, and no more than 14 consecutive days of work without at least 2 consecutive days off.

(2) Minimum Shift Crew

The minimum shift crew for a unit shall include three operators, plus an additional three operators when the unit is operating. Shift staffing may be adjusted at multi-unit stations to allow credit for operators holding licenses on more than one unit.

In each control room, including common control rooms for multiple units, there shall be at all times a licensed reactor operator for each reactor loaded with fuel and a senior reactor operator licensed for each reactor that is operating. There shall also be onsite at all times, an additional relief operator licensed for each reactor, a licensed senior reactor operator who is designated as shift supervisor, and any other licensed senior reactor

operators required so that their total number is at least one more than the number of control rooms from which a reactor is being operated.

PVNGS Evaluation

1. Limit Overtime

PVNGS administrative procedures shall, by fuel load, provide provisions limiting maximum hours worked by licensed operators, non-licensed operators, and other key personnel who perform safety-related functions.

2. Minimum Shift Crew

The minimum shift organization as described in FSAR Section 13.1.2.3 will be updated to require, commencing at fuel load, for each unit:

	Applicable Modes (a)	
License Category	1, 2, 3 and 4(d)	5 and 6
SOP (SRO)	2(b)	1(b,c)
OP (RO)	2	1
Non-Licensed	2	1

(a) Shift crew composition may be less than the minimum requirements for a period of time not to exceed 2 hours in order to accommodate unexpected absence of on-duty shift crew member, provided immediate action

is taken to restore the shift crew composition to within the minimum requirements of this table. Operational modes are as defined in CESSAR Table 1.1, Section 16.

(b) At least one of the unit senior reactor operators on site and on shift will be a shift supervisor. At least one senior reactor operator will be in the unit control room during mode 1 through 4 operations for each unit.

(c) Does not include the licensed senior reactor operator or senior reactor operator limited to fuel handling, supervising core alterations. A licensed senior operator is required to directly supervise any core alteration activity.

(d) A shift technical advisor shall be on site and on shift (available within 10 minutes) whenever one or more units are operating in modes 1 through 4.

PVNGS administrative procedures will by fuel load provide provisions governing required shift staffing and movement of key on-shift individuals around the plant.

(5) Training with emphasis on reactor and plant transients.

3. Three Month Training On-Shift

The training program described in FSAR Section 13.2.1.1.1 provides a combination of experience and training in the control room and on a simulator that provides license candidates appropriate control room experience.

4. Modify Training

Heat transfer, fluid flow and thermodynamics will be included in Phase I training. Our response to item II.B.4 addresses training for mitigating core damage. Plant transients are currently covered in Phase IV training on the simulator.

5. Facility Certification

The PVNGS operating organization is described in PVNGS FSAR Section 13.1.2. The Vice President of Electric Operations for Arizona Public Service Company is the highest level of corporate management for plant operation and, as such, shall sign certifications pursuant to Sections 55.10(a)(6) and 55.33a(4), and (5) of 10 CFR Part 55.

I.A.2.3 ADMINISTRATION OF TRAINING PROGRAMS

Position

Pending accreditation of training institutions, licensees and applicants for operating licenses will assure that training center and facility instructors who teach systems, integrated responses, transient, and simulator courses demonstrate senior reactor operator (SRO) qualifications and be enrolled in appropriate requalification programs.

PVNGS Evaluation

Commencing at Unit 1 fuel load, permanent members of the training staff who instruct licensed operator candidates in systems, integrated transient responses, and control room simulator courses shall have 4 years of power plant experience, of which 2 years shall be nuclear power plant experience (including 6 months at PVNGS) with no more than 2 years being academic or related technical training. They shall successfully complete an examination equivalent to an SRO examination. They shall take part in the requalification training to maintain current on plant operating history, problems and changes to procedures and administrative limitations. If licensed as an SRO they shall participate in the requalification training program with the exception stated in PVNGS FSAR Section 13.2.2.1.3.

I.A.3.1 REVISE SCOPE AND CRITERIA FOR LICENSING EXAMINATIONS

Position

(1) Increase Scope (NRC letter, H. R. Denton to All Power Reactor Applicants and Licensees, dated March 28, 1980)

(a) A new category shall be added to the operator written examination entitled, "Principles of Heat Transfer and Fluid Mechanics."

(b) A new category shall be added to the senior operator written examination entitled, "Theory of Fluids and Thermodynamics."

(c) Time limits shall be imposed for completion of the written examinations:

1. Operator: 9 hours
2. Senior Operator: 7 hours

(d) All applicants for senior operator licenses shall be required to be administered an operating test as well as the written examination.

(e) Applicants will grant permission to NRC to inform their facility management regarding the results of the examinations for purposes of enrollment in requalification programs.

(2) Increase Passing Grade (NRC letter, H. R. Denton to All Power Reactor Applicants and Licensees, dated March 28, 1980)

The passing grade for the written examination shall be 80% overall and 70% in each category.

(3) Simulator Exams (NUREG 0737)

Simulator examinations will be included as part of the licensing examinations.

PVNGS Evaluation

1. Increase Scope

Refer to the response in item I.A.2.1. PVNGS shall request that each applicant for an operator license grant permission to the NRC to inform PVNGS management regarding the result of their examination.

2. Increase Passing Grade

All license candidates which are recommended for license examinations are expected to have the ability to complete the examination with a satisfactory score in each category. Candidates will be evaluated on a basis of a passing grade of 80% overall and 70% in each category.

3. Simulator Exams

The PVNGS simulator will be made available to NRC examiners for examining candidates for reactor operator and senior reactor operator licenses prior to fuel load, including cold examinations.

emergency procedure guidelines are documented in Report CEN-128. This report was submitted to the NRC staff for review on April 1, 1980.

The emergency procedure guidelines contained in Report CEN-128 were prepared based on extensive reviews of existing emergency procedures, past safety and design analyses, the plant simulation and sequence of events analyses in CEN-128, and interviews with operations personnel at plants with operating C-E reactors. These emergency procedure guidelines were prepared to be used as a basis for reviewing and revising, if necessary, existing plant emergency procedures. APS is using these guidelines to develop PVNGS emergency procedures where appropriate.

The NRC staff in a letter dated July 17, 1980, sent questions to the C-E Owners Group concerning the emergency procedure guidelines documented in Report CEN-128. A meeting was held with the NRC staff in Bethesda, Maryland on September 11, 1980, to discuss these questions and answers to them. The C-E Owners Group is presently preparing answers to these questions and revisions to the emergency procedure guidelines in Report CEN-128 as are appropriate. A preliminary response to these questions was submitted by the C-E Owners Group to the NRC staff in a letter dated December 10, 1980. The remaining responses were submitted to the NRC staff by the C-E Owners Group in a meeting on January 30, 1981.

Since early 1980, the C-E Owners Group has conducted an extensive evaluation of specific technical characteristics of emergency procedure guidelines. These include (1) the diagnostic guidance to be provided in emergency procedure guidelines, (2) the need for a separate guideline for inadequate core cooling, and (3) the format for presentation of emergency guidance. This evaluation was completed in the first quarter of 1981. The results of this evaluation serve as one basis for possible revision of emergency procedure guidelines contained in Report CEN-128.

The C-E Owners Group agreed on December 3, 1980, to conduct a series of workshops concerning emergency procedure guidelines in early 1981. The first such work shops were conducted in January, February, and March 1981. Another workshop was held in April 1981. These workshops provided a formal process by which the emergency procedure guidelines documented in Report CEN-128 will be revised to account for multiple failure considerations. Input to these workshops was provided by the analysis and emergency procedure guidelines studies which have been conducted by the C-E Owners Group since early 1980. The workshops were attended by staff personnel from C-E and from utilities which own C-E reactors. These workshops also provided the opportunity to explore multiple-failure scenarios beyond those which have been currently identified in the C-E Owners Group analyses of transients and accidents. LOCA was also considered in these workshops.

The C-E Owners Group held a meeting with the NRC Division of Systems Integration and Human Factors Safety on January 30, 1981, to discuss the process being used for revision of the emergency procedure guidelines. The revised emergency procedure guidelines were submitted to the staff on June 30, 1981. A meeting is currently scheduled between the C-E Owners Group and the NRC staff for July 24, 1981 to resolve any questions and concerns the staff may have.

Following the completion of the NRC review of the revised emergency procedure guidelines, the completion of the C-E Owners Group activities to define the process for development or revision of plant emergency procedures, and the review of the proposed draft NUREG-0799 on emergency procedures, APS will prepare the plant emergency procedures. The schedule of this activity will be developed at that time.

1

I.C.2 SHIFT RELIEF AND TURNOVER PROCEDURES

Position (NUREG-0694)

Revise plant procedures for shift relief and turnover to require signed checklists and logs to assure that the operating staff (including auxiliary operators and maintenance personnel) possess adequate knowledge of critical plant parameter status, system status, availability and alignment.

PVNGS Evaluation

PVNGS Operations will have detailed administrative procedures that meet the guidance of the November 9, 1979, NRC letter from D. B. Vassallo to all Pending Construction Permit Applicants for shift relief and turnovers to ensure that current plant conditions and system status is conveyed to the oncoming shift. These procedures will include the use of checklists and logs to ensure that there is a proper turnover of command functions and current operating conditions. Turnover and relief will include a review of tagouts, abnormal conditions, jumpers/bypasses, surveillance testing, and conditions affecting Technical Specifications. Annunciator panels, CRT's, and key operating parameters will also be monitored to verify system status and equipment condition.

The major Human Engineering Discrepancies (HED) are:

1. Foxboro Displays/controllers - Inadequate labeling, scale readibility and functional distinctiveness.
2. Inadequate system demarcation on control boards.
3. Annunciator System - Inadequate alarm priority, displays, window consistency, grouping and demarcation.

Most of the HED corrective actions have been identified and need only be scheduled for implementation. Instrument relocations identified are being factored into the design. A control board demarcation study was conducted in mid-March 1981 as a result of the PDA finding. A design change is currently being prepared to perform the control board color coded demarcation changes. Also an annunciator prioritization study is currently under way to resolve the HED's identified during the PDA. It is planned to have changes completed by April 1, 1982. 1

Remaining work within the scope of this review consists of walk-through of the plant operating procedures when they are available. This effort is not expected to surface additional discrepancies of any significance.

The control room and main control board layout design and implementation are considered to have incorporated good human engineering practice.

The early part of this effort was divided into three phases. Phase I of the study developed the guidelines to be used while conducting the CRDR from NRC control room audit reports of other utility facilities and NUREG/CR-1580.

Phase II of the study consisted of the detailed data taking effort and the identification of human factors deficiencies. The three task areas addressed were human factors, systems factors, and operator preparedness factors. The deficiencies identified were analyzed for proper resolution and assigned priorities to assist in determining a schedule for implementation.

Phase III, which is currently in progress, includes preparation and publication of a preliminary report.

Because of the stage of development of emergency operating procedures (EOPs), that portion of the CRDR involving the walk-through and videotaping of EOPs will start in the third quarter of 1981. When this later part of the CRDR is completed, a final report for submittal to the NRC will be prepared. The submittal date is targeted for December, 1981.

The review has resulted in APS initiating implementation of the following to date:

- Color demarcation
- Instrument relocation
- Alarm prioritization
- Additional instrumentation

2. The vent flow rate capability shall be based upon the following considerations:

   a) The vent rate should be sufficient to preclude the gas accumulation from interfering with core cooling.

   b) Coolant loss through the vent should not exceed makeup capacity.

   c) The vent mass rate should not result in heat loss from the RCS in excess of the pressurizer heater capacity.

3. The vents shall conform to the applicable requirements of 10CFR50, Appendix A, General Design Criteria. In particular, these vents shall be safety grade and satisfy the single failure criterion and the requirements of IEEE-279 in order to ensure a low probability of inadvertent action. 1

4. The design shall minimize modification of currently installed safety class equipment and piping which may be radioactive or require major reactor coolant system hydrostatic testing after installation.

5. The system shall be analyzed to determine effects of pipe breakage and the results should be demonstrated acceptable in accordance with the acceptance criteria of 10CFR 50.46.

6. The vent system shall be capable of selectively venting to either the containment or the reactor drain tank.

7. The vent system shall be designed to vent superheated steam, steam water mixtures, water, fission gases, helium, nitrogen, and hydrogen as high as 2500 psig and 700°F.

8. Control room position indication shall be provided for all power operated valves.

9. The system shall be designed not to interfere with refueling maintenance actions.

1 The reactor coolant vent system is designed to vent non-condensible gases from the reactor coolant system during post-accident conditions. The purpose of venting is to prevent possible interference with core cooling. Small amounts of gas can be vented to the reactor drain tank and thus not enter the containment atmosphere. Larger volumes will require venting to the containment - either through the ruptured reactor drain tank rupture disk or directly - where the hydrogen concentration will be controlled by the containment hydrogen recombiner. Pressure instrumentation is included in the design to monitor system performance.

Although designed for accident conditions, the system may be used to aid in the refueling venting of the reactor

II.B.2 DESIGN REVIEW OF PLANT SHIELDING AND ENVIRONMENTAL QUALIFICATION OF EQUIPMENT FOR SPACES/SYSTEMS WHICH MAY BE USED IN POSTACCIDENT OPERATIONS

Position

With the assumption of a postaccident release of radioactivity equivalent to that described in Regulatory Guides 1.3 and 1.4 (i.e., the equivalent of 50% of the core radioiodine, 100% of the core noble gas inventory, and 1% of the core solids are contained in the primary coolant), each licensee shall perform a radiation and shielding-design review of the spaces around systems that may, as a result of an accident, contain highly radioactive materials. The design review should identify the location of vital areas and equipment, such as the control room, radwaste control stations, emergency power supplies, motor control centers, and instrument areas, in which personnel occupancy may be unduly limited or safety equipment may be unduly degraded by the radiation fields during postaccident operations of these systems.

Each licensee shall provide for adequate access to vital areas and protection of safety equipment by design changes, increased permanent or temporary shielding, or postaccident procedural controls. The design review shall determine which types of corrective actions are needed for vital areas throughout the facility.

PVNGS Evaluation

As part of the PVNGS design process before the incident at TMI-2, the shielding of areas that require personnel access for accident mitigation (such as the control room) was reviewed to determine that access would not be unduly limited. For maintenance actions, this review principally considered shielding separation between redundant ESF components to ensure that repairs to a failed component would not be unduly restricted by radiation from an operating component. In addition, as noted in FSAR Section 3.11, safety related equipment is qualified for the maximum expected radiation dose.

1 An analysis of the PVNGS shielding design was performed to determine if TMI level source strengths would inhibit maintenance access or violate 10 CFR 50, Appendix A, General Design Criterion 19 (GDC 19). The analysis will also review equipment qualification dose limits in accordance with Commission Order and Memorandum CLI-80-21 and NUREG 0588.

1 A. Source Terms

Initial core releases used in the analyses are equivalent to those recommended in Regulatory Guides 1.4 and 1.7 and Standard Review Plan 15.6.5 and considered two LOCA events. The first was a LOCA with recirculation accomplished via the containment sump. The second was a LOCA with an intact primary with recirculation accomplished via the shutdown

TABLE II.B.2-4

SOURCES USED IN POST-ACCIDENT SHIELDING REVIEW[a][b]

Source Type	LOCA with Sump Recirculation	LOCA - Degraded Core - Intact Primary
A	• Containment Air • Hydrogen control system	• Containment air • Hydrogen control system
B	-	• Safety Injection System • Containment Spray System • Shutdown Cooling System • Post-Accident Sampling System • Letdown System[c]
C	• Safety Injection System • Containment Spray System • Shutdown Cooling System • Post-Accident Sampling System • Letdown System[c]	-

a. Where redundant systems exist, both are assumed in use.
b. Radwaste systems not used post-accident.
c. Portions up to purification filter inlet.

1

post-accident access plant. These curves are presented as figures II.B.2-1 (source A), II.B.2-2 (source B), and II.B.2-3 (source C).

B. Shield Review

The facility layout will assist in keeping occupational exposures ALARA even after a design basis accident. While exposures will be significantly higher than during normal operation, required access is provided to vital areas and systems without exceeding 5 rem/hr. Zone maps showing expected dose rates in the event of a LOCA with sump recirculation are provided as figures II.B.2-4 through II.B.2-73. Zone maps for the hypothetical condition of a LOCA with an intact primary but with a degraded core are provided as figures II.B.2-14 through II.B.2-23. The source terms correspond to those noted in section II.B.2A. The dose rates projected for these two sets of drawings do not assume decay beyond that corresponding to the onset of recirculation. Even so, virtually unrestricted access will be permitted within portions of the upper floor of the auxiliary building (such as the area of the operational support center) and the lower levels of the control room. Continuous occupancy will be permitted in the control room, satellite Technical Support Center (TSC), TSC, diesel generator building and emergency operations facility (EOF) as dose rates will be 15 mrem/hr or less.

To provide sampling capability with exposures kept ALARA, PVNGS will incorporate a remote, automated, post-accident sampling system that meets the requirements of NUREG 0737 and Regulatory Guide 1.97, Revision 2. This system can be operated from the radiochemistry counting room, the control room, or the technical support center. Backup grab sample capability will be provided in the hot lab sample room using microchemistry techniques to keep the volume of source as small as possible. Refer to section II.B.3 for further details.

The only other area where access might be required is to the hydrogen monitors/recombiners. Projected dose rates at the onset of recirculation are expected to be approximately 10 to 30 rem/hr (sump recirculation). As the recombiners do not have to be installed until at least one day after the DBA, dose rates will drop due to decay of about 1/10 the doses noted above. Thus, the installation dose rate (assuming sump recirculation) will be less than 5 rem/hr. While the dose rate would be greater than 5 rem/hr for an intact primary-degraded core event, the recombiners would not need to be installed since an intact primary would not be consistent with hydrogen generation inside the containment. If hydrogen generation were postulated, this would necessitate a break or opening in the primary. Consequently, sump recirculation would be available with the concomitant release of noble gases and

dilution by the refueling water tank. These consequences would lead to the doses noted above for the sump recirculation mode of cooling (i.e., dose rates less than 5 rem/hr).

ESF grade filtered ventilation is provided for auxiliary building rooms below elevation 100' (refer to FSAR section 9.4). This will reduce airborne sources due to recirculation and/or containment leakage. Non-ESF grade filtered ventilation is available for use to reduce airborne sources above elevation 100' in the auxiliary building (refer to FSAR section 9.4). The use of non-ESF filtration is acceptable since there are no recirculation components above elevation 100'. Thus the only significant source of airborne activity is containment leakage. This leakage has already been accounted for in offsite dose analyses which assumed direct containment leakage to the atmosphere. Secondly, this filter discharges via the plant vent. The plant vent will be monitored in accordance with NUREG 0737 and Regulatory Guide 1.97, Revision 2 to provide notification of decreased filter efficiency. Refer to section II.F.1.

Therefore, considering direct and airborne sources, access can be provided to those vital areas necessary for control of the plant.

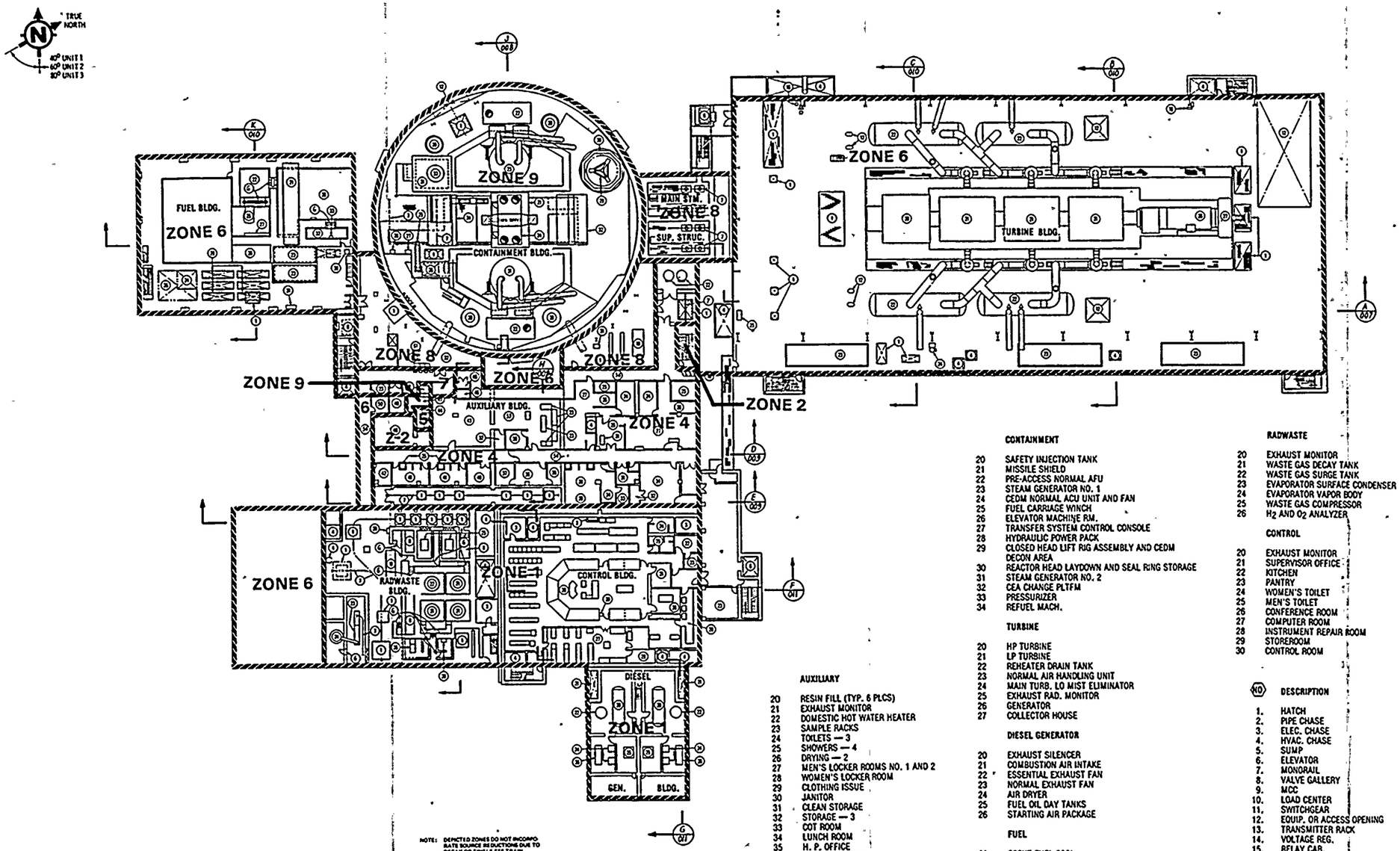

CONTAINMENT

20 SAFETY INJECTION TANK
21 MISSILE SHIELD
22 PRE-ACCESS NORMAL AFU
23 STEAM GENERATOR NO. 1
24 CEDM NORMAL ACU UNIT AND FAN
25 FUEL CARRIAGE WINCH
26 ELEVATOR MACHINE RM.
27 TRANSFER SYSTEM CONTROL CONSOLE
28 HYDRAULIC POWER PACK
29 CLOSED HEAD LIFT RIG ASSEMBLY AND CEDM DECON AREA
30 REACTOR HEAD LAYDOWN AND SEAL RING STORAGE
31 STEAM GENERATOR NO. 2
32 CEA CHANGE PLTFM
33 PRESSURIZER
34 REFUEL MACH.

TURBINE

20 HP TURBINE
21 LP TURBINE
22 REHEATER DRAIN TANK
23 NORMAL AIR HANDLING UNIT
24 MAIN TURB. LO MIST ELIMINATOR
25 EXHAUST RAD. MONITOR
26 GENERATOR
27 COLLECTOR HOUSE

DIESEL GENERATOR

20 EXHAUST SILENCER
21 COMBUSTION AIR INTAKE
22 ESSENTIAL EXHAUST FAN
23 NORMAL EXHAUST FAN
24 AIR DRYER
25 FUEL OIL DAY TANKS
26 STARTING AIR PACKAGE

FUEL

20 SPENT FUEL POOL
21 SPENT FUEL HANDLING MACHINE
22 CASK LOADING PIT
23 NEW FUEL STORAGE COVERS
24 CASK LIFTING RIG LAYDOWN AREA
25 DECON PIT
26 DECON PIT COVER
27 GATE STORAGE
28 NEW FUEL INSPECTION PIT
29 NEW FUEL CONTAINERS LAYDOWN AREA
30 UPENDER HYD. DRIVE UNIT
31 POOL COOLING PURIFICATION PANEL
32 CANAL
33 NEW FUEL ELEVATOR

AUXILIARY

20 RESIN FILL (TYP. 6 PLCS)
21 EXHAUST MONITOR
22 DOMESTIC HOT WATER HEATER
23 SAMPLE RACKS
24 TOILETS — 3
25 SHOWERS — 4
26 DRYING — 2
27 MEN'S LOCKER ROOMS NO. 1 AND 2
28 WOMEN'S LOCKER ROOM
29 CLOTHING ISSUE
30 JANITOR
31 CLEAN STORAGE
32 STORAGE — 3
33 COT ROOM
34 LUNCH ROOM
35 H. P. OFFICE
36 HEALTH PHYSICS
37 INST. RESP. MAINT. ISSUE
38 OFFICE
39 SAMPLING AREA
40 FIRST AID
41 PERSONNEL DECON AREA — 2
42 H. P. SAMPLE COUNT. ROOM
43 HOT LAB
44 SAMPLE ROOM HOOD AND SINK
45 FLAMMABLE STORAGE
46 CYLINDER STORAGE
47 PIPING AREA
48 COUNTING ROOM
49 TOOL AND EQUIP. ROOM
50 SPECIAL DECON.
51 DECON. ROOM
52 EMERGENCY SHOWER AND EYE WASH
53 COLD LAB
54 CORRIDOR

RADWASTE

20 EXHAUST MONITOR
21 WASTE GAS DECAY TANK
22 WASTE GAS SURGE TANK
23 EVAPORATOR SURFACE CONDENSER
24 EVAPORATOR VAPOR BODY
25 WASTE GAS COMPRESSOR
26 H_2 AND O_2 ANALYZER

CONTROL

20 EXHAUST MONITOR
21 SUPERVISOR OFFICE
22 KITCHEN
23 PANTRY
24 WOMEN'S TOILET
25 MEN'S TOILET
26 CONFERENCE ROOM
27 COMPUTER ROOM
28 INSTRUMENT REPAIR ROOM
29 STOREROOM
30 CONTROL ROOM

NO	DESCRIPTION
1.	HATCH
2.	PIPE CHASE
3.	ELEC. CHASE
4.	HVAC. CHASE
5.	SUMP
6.	ELEVATOR
7.	MONORAIL
8.	VALVE GALLERY
9.	MCC
10.	LOAD CENTER
11.	SWITCHGEAR
12.	EQUIP. OR ACCESS OPENING
13.	TRANSMITTER RACK
14.	VOLTAGE REG.
15.	RELAY CAB.
16.	LIGHTING PANEL
17.	DISTRIBUTION PANEL
18.	JUNCTION BOX
19.	PIPE TRENCH

LEGEND:

ZONE 1 $X < 0.5$ mR/hr
ZONE 2 $0.5 \leq X < 2.5$ mR/hr
ZONE 3 $2.5 \leq X < 15$ mR/hr
ZONE 4 $15 \leq X < 100$ mR/hr
ZONE 5 $100 \leq X < 1000$ mR/hr
ZONE 6 $1 \leq X < 5$ R/hr
ZONE 7 $5 \leq X < 10$ R/hr
ZONE 8 $10 \leq X < 100$ R/hr
ZONE 9 $100 \leq X$ R/hr

— DENOTES UP U.N.O.
▩ INDICATES ONE-WAY DOOR OR CONTROLLED FROM INSIDE OF BLDG
G-GATE
△ INDICATES CONTROLLED ACCESS AND/OR ROLL UP DOOR

Palo Verde Nuclear Generating Station
LLIR

RADIATION ZONES
LOCA WITH SUMP RECIRCULATION
BETWEEN EL. 140'-0" & 200'-0"

Figure II.B.2-7

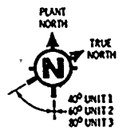

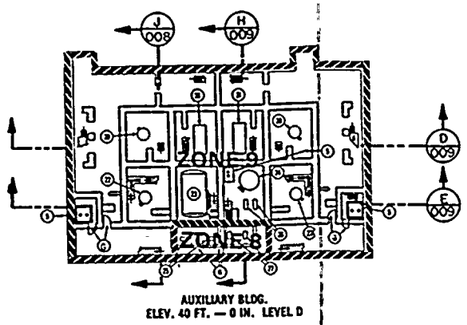

AUXILIARY BLDG.
ELEV. 40 FT. — 0 IN. LEVEL D

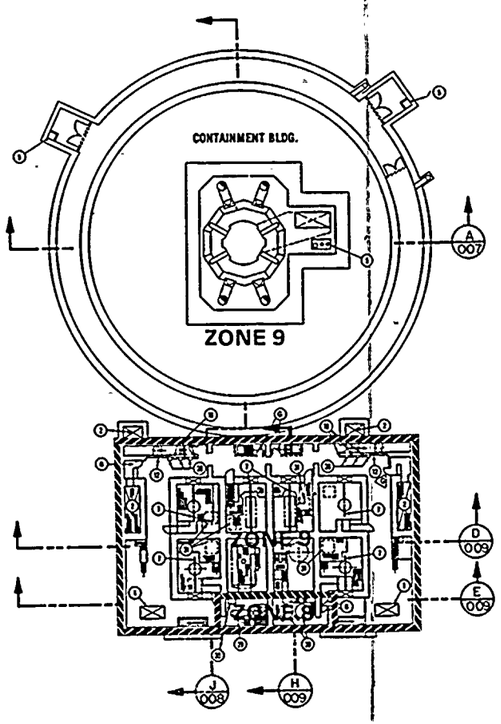

AUXILIARY BLDG.
ELEV. 51 FT. — 6 IN. LEVEL C

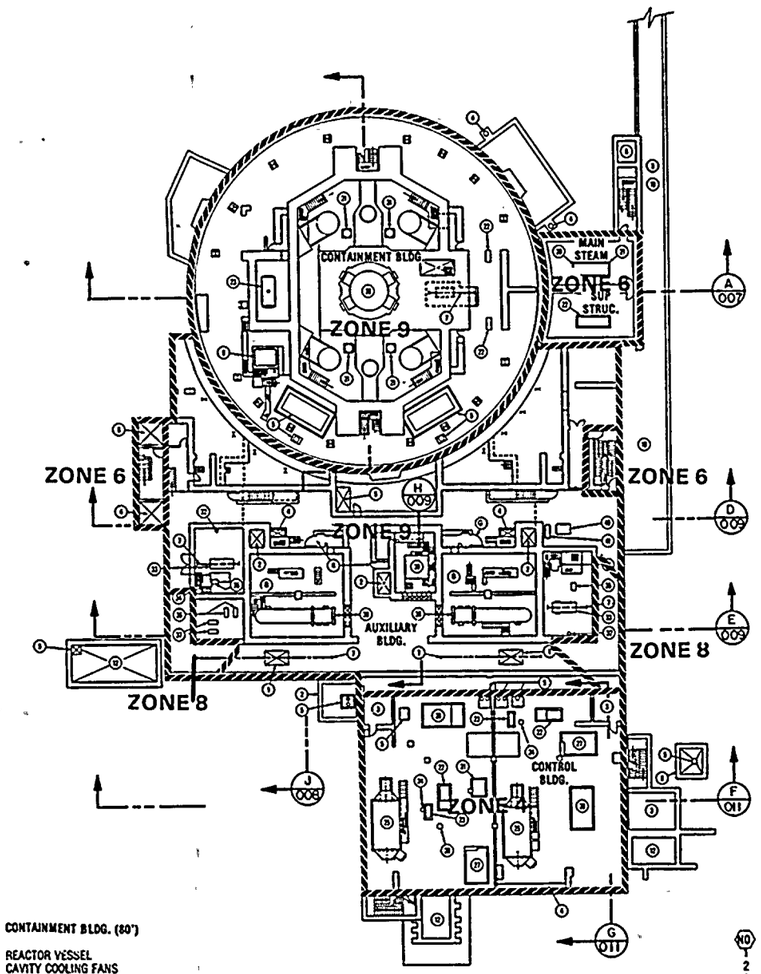

NOTE: DEPICTED ZONES DO NOT INCORPORATE SOURCE REDUCTIONS DUE TO DECAY OR SINGLE ESF TRAIN OPERATION. REFER TO FSAR SECTION 12.2 FOR DECAY CORRECTIONS. NORMAL OPERATION SOURCES ARE NOT INCLUDED IN THESE ZONES.

CONTAINMENT BLDG. (80')

20	REACTOR VESSEL
21	CAVITY COOLING FANS
22	WET LAY-UP PUMPS
23	REACTOR DRAIN TANK

MSSS (81')

20	AUX. FEEDWATER TURBINE PACKAGE
21	TUBINE DRIVEN PUMP
22	MOTOR DRIVEN PUMP

CONTROL BLDG. (74')

20	CONTROL BLDG. NORMAL AHU'S
21	CONTROL BLDG. OUTSIDE AIR WASHER UNIT
22	CONTROL BLDGE. ESF SWGR RM. ESSENTIAL AHU'S
23	ESSENTIAL CHILLED WATER CIRCULATION PUMPS
24	CHEMICAL ADDITION TANKS
25	CONTROL ROOM ESSENTIAL AHU'S
26	ESSENTIAL CHILLED WATER EXPANSION TANK
27	ESSENTIAL CHILLERS

AUX. BLDG. BETWEEN 40' AND 100'

20	CONT. SPRAY PUMPS
21	HPSI. PUMPS
22	LPSI. PUMPS
23	EQUIP. DRAIN TANK
24	COOLING WATER HOLD-UP TANK
25	HEATER DRAIN PUMPS
26	COOLING WATER HOLD-UP TANK PUMPS
27	CHEMICAL DRAIN TANK PUMPS
28	TRANSFORMERS
29	AUX. STEAM CONDENSATE RECEIVER TANK
30	CHEMICAL DRAIN TANKS
31	ESSENTIAL AIR CONDITIONING UNITS
32	ECW CHEMICAL ADDITION TANKS
33	ECW PUMPS
34	ECW PUMP ROOM ESSENTIAL A.C.U.
35	ECW RADIATION MONITORS
36	REACTOR MAKE-UP WATER PUMPS
37	BORIC ACID MAKE-UP PUMPS
38	SHUTDOWN COOLING HEAT EXCHANGERS
39	GAS STRIPPER
40	GAS STRIPPER CONTROL CABINET
41	GAS STRIPPER INSTRUMENT RACK

NO	DESCRIPTION
1	HATCH
2	PIPE CHASE
3	ELEC. CHASE
4	HVAC. CHASE
5	SUMP
6	ELEVATOR
7	MONORAIL
8	VALVE GALLERY
9	MCC
10	LOAD CENTER
11	SWITCHGEAR
12	EQUIP. OR ACCESS OPENING
13	TRANSMITTER RACK
14	VOLTAGE REG.
15	RELAY CAB.
16	LIGHTING PANEL
17	DISTRIBUTION PANEL
18	JUNCTION BOX
19	PIPE TRENCH

LEGEND:

ZONE 1	$X < 0.5$ mR/hr
ZONE 2	$0.5 \leq X < 2.5$ mR/hr
ZONE 3	$2.5 \leq X < 15$ mR/hr
ZONE 4	$15 \leq X < 100$ mR/hr
ZONE 5	$100 \leq X < 1000$ mR/hr
ZONE 6	$1 \leq X < 5$ R/hr
ZONE 7	$5 \leq X < 10$ R/hr
ZONE 8	$10 \leq X < 100$ R/hr
ZONE 9	$100 \leq X$ R/hr

— DENOTES UP U.N.O.
INDICATES ONE-WAY DOOR OR CONTROLLED FROM INSIDE OF BLDG
GATE

▷ INDICATES CONTROLLED ACCESS AND/OR ROLL UP DOOR

Palo Verde Nuclear Generating Station
LLIR

RADIATION ZONES - LOCA
DEGRADED CORE - INTACT PREIMARY
BETWEEN EL. 40'-0" & 100'-0"

Figure II.B.2-14

in excess of three rem whole-body or 18 3/4 rem to the extremities), to analyze samples within 2 hours for radioactive noble gases, iodines, cesium and non-volatile isotopes, and to analyze samples within 1 hour for pH, boron, chlorides, dissolved oxygen and gaseous oxygen. These plant modifications, collectively referred to as the post accident sampling system (PASS) are illustrated in figures II.B.3-1 and II.B.3-2. Procedures will be developed for obtaining and analyzing these samples.

Design Capability

Modification of currently existing plant facilities allows plant personnel to obtain samples, in less than 1 hour, of pressurized and depressurized reactor coolant, safety injection, containment air, all containment sumps, all auxiliary building sumps and volume control tank. 1

In-line analyses with automatic sequencing and computer control and readout will be backed up by a grab sample capability using manual controls. In-line analyses will include isotopic, gross gamma, pH, boron, dissolved hydrogen, chloride, dissolved oxygen and gaseous oxygen. Gaseous hydrogen will be sampled by the containment hydrogen control system.

The onsite facility design and procedures provide the following capabilities:

A. Containment air may be sampled under positive or negative pressures.

B. Provisions are made to purge sample lines, for reducing plate-out, to insure proper mixing, for minimizing leakage, preventing blockage, to back-flush, to blowdown, for appropriate sample disposal, minimizing crud traps, and for passive flow restrictions (when sampling high pressure systems).

C. The PASS sampling lines and components conform to Quality Group D requirements. Isolation valves are used with appropriate automatic closure signals where PASS piping interconnects with higher quality group classification piping.

D. Provisions are included to measure a wide range of isotopes for liquids from 10^{-3} μCi/ml to 10^{+7} μCi/ml and for gases from 10^{-7} μCi/ml to 10^{+5} μCi/ml. Sample dilution is available for grab samples but is not required for in-line analysis.

E. Provisions are included to measure dissolved hydrogen from 0 to 2000 cc/kg.

F. Provisions are included to restrict background levels of radiation at the PASS sample area such that the sample analysis provides results with an acceptably small error (approximately a factor of 2).

G. Provisions are included to facilitate plant procedures to identify the analyses required, measurement techniques and background level reduction methods.

H. Chemical analysis capability is provided which can meet all requirements when exposed to the specified source term.

I. Provisions are included to be able to draw a grab sample while maintaining ALARA radiation exposures and not exceeding General Design Criteria 19.

1. Shielding calculations were performed using source term specified in NUREG 0737 and Regulatory Guide 1.97 Rev 2 (Refer to section II.B.2).

2. A result of the shielding review, piping used for backup grab sampling in the hot lab sample room area will be lead wrapped to keep operator doses ALARA. 1

3. High range portable and fixed survey instruments and personnel dosimeters are provided to permit rapid assessment of exposure rates and accumulated personnel exposure.

J. Design parameters are based on the full range of design pressure of the reactor coolant system and containment.

K. When plant modifications are completed and procedures are implemented, testing will be conducted to demonstrate the ability to obtain and analyze a sample by in-line and grab sample techniques.

SAMPLE INLET PIPING

Samples are drawn from the following nine points in each unit:

A. RCS hot leg - north side of RCS

B. Inlet to letdown system - south side of RCS

C. Safety injection mini flow line - Train A

D. Safety injection mini flow line - Train B

E. Containment recirculation sump

F. Containment radwaste sump

G. Auxiliary building sumps

1 H. Volume control tank

I. Containment atmosphere via the containment hydrogen control system

Isolation valves provide a quality and material classification break between the sample points and the PASS.

Sample Return Piping

Samples are returned to the following three points in each unit:

A. Containment Atmosphere (via the containment hydrogen control system) for gas samples only.

B. Reactor drain tank - for post accident liquid samples

C. Equipment drain tank - for normal operation liquid samples

Isolation valves provide a quality and material classification break between the sample return points and the PASS.

Sample Station

The PASS is a modular system. The valve module is located in a piping penetration room. All pumps, heat exchangers, valves and other sources of possible leakage are located in this module. The radiological and chemical module is located in the auxiliary building. This contains the in-line isotopic and chemical analysis equipment. The two modules are connected via short pipes through a shield wall that separates the auxiliary building from the piping penetration room. 1

This method of separation provides for:

A. Ease of routing sample piping to and from the PASS

B. Isolation of any leakage during normal and post accident operation

C. Ability to repair and maintain the spectroscopic and chemical instruments during normal operation

D. Meeting space requirements in an existing building.

The valve module provides the ability to draw, purge, cool, degas, circulate, dilute, and route samples in the PASS.

The radiological and chemical module provides isotopic, gross gamma, pH, chloride, boron, dissolved oxygen and gaseous oxygen analysis. (Hydrogen analysis is provided by the containment hydrogen control system.)

Isotopic analysis is provided with a collimated Ge (Li) detector with at least a 45 day supply of liquid nitrogen. All chemical detectors have the ability for remote reagent addition and calibration.

The entire sampling sequence is controlled by a valve sequencing controller which in turn is run by a pulse height analyzer (PHA) with extended capabilities. The PHA is operated by a technician.

1 Grab samples are available from the hot lab in either a depressurized, diluted or pressurized sample device. Instrumentation is provided for pressure, temperature and flow measurement. The radiological and chemical module is provided with sufficient shielding to maintain ALARA criteria during normal and post accident operation.

Gas samples will be followed by a nitrogen purge to flush out remaining gases.

Liquid samples will be followed by a demineralized water purge followed by a nitrogen gas purge to flush out remaining fluids. Nuclear cooling water will be provided for sample heat exchangers.

Instrument air will be provided for pneumatically controlled valves.

Control Panel

The PASS Control Panel is part of the hot lab PHA computer system. This is located in a shielded room, adjacent to the hot lab. This includes:

A. The valve control assembly with manual switching capability for all remote valves, pumps, and instruments

B. Recording devices

C. Mini status board

D. Microcomputer with CRT display

E. In-line instrumentation readout 1

PASS Operation

The operation of the system is dependent upon communication between the technician in the hot lab and operators in the control room. Prior to sampling a specific point, the hot lab technician verifies with the control room operator that the system isolation valve is open. This may involve overriding a CIAS to re-open a valve. The hot lab operator will then initialize the PHA computer and perform radiological and chemical analysis, directing the sample to a predetermined discharge point. Results will be available on the PHA CRT and on the recorder printout.

Meeting Requirements

1 The process sampling system discussed in FSAR section 9.3.2 reflects the addition of the post accident sampling system. This fulfills the NRC requirements as outlined in NUREG 0578, NUREG 0737, and Reg Guide 1.97, Rev 2.

E. Radiation Monitoring

1. Response of Process and Area Monitors to severe damages; behavior of detectors when saturated; method for detecting radiation readings by direct measurement at detector output (overranged amplifier); expected accuracy of detectors at different locations; use of detectors to determine extent of core damage.

2. Methods of determining dose rate inside containment from measurements taken outside containment.

F. Gas Generation

1. Methods of H_2 generation during an accident; other sources of gas (Xe, Kr); techniques for venting or disposal of non-condensables.

2. H_2 flammability and explosive limit; sources of O_2 in containment or Reactor Coolant System.

(2) Complete Training

The course shall be developed and these personnel shall participate prior to fuel loading of unit one.

PVNGS Evaluation

(1) Develop Training Program

A course will be developed to train shift technical advisors and operating personnel through the operations

chain to the licensed operators in the use of installed plant systems to control or mitigate an accident in which the core is severely damaged. The training program will include the topics suggested in the H.R. Denton letter of March 28, 1980.

Managers and technicians in the Instrumentation and Control (I & C), radiation protection and chemistry sections will receive training commensurate with their responsibilities that meets the requirements of the H.R. Denton letter of March 28, 1980.

(2) Complete Training

The above training will be completed prior to full power operation.

II.E SYSTEM DESIGN

II.E.1.1 AUXILIARY FEEDWATER SYSTEM EVALUATION

Position

The Office of Nuclear Reactor Regulation is requiring reevaluation of the auxiliary feedwater (AFW) systems for all PWR operating plant licensees and operating license applications. This action includes:

(1) Perform a simplified AFW system reliability analysis that uses event-tree and fault-tree logic techniques to determine the potential for AFW system failure under various loss-of-main-feedwater-transient conditions. Particular emphasis is given to determining potential failures that could result from human errors, common causes, single-point vulnerabilities and test and maintenance outages;

(2) Perform a deterministic review of the AFW system using the acceptance criteria of Standard Review Plan Section 10.4.9 and associated Branch Technical Position ASB 10-1 as principal guidance; and

(3) Reevaluate the AFW system flowrate design bases and criteria.

PVNGS Evaluation

An auxiliary feedwater system review was conducted on August 21 and 22, 1980, and included NRC participation.

This review included a review of the PVNGS Auxiliary Feedwater System Reliability Analysis. A transcript of this review was provided to NRC on October 17, 1980. Responses to open items of the review were provided to NRC on March 6, 1981.

The PVNGS Auxiliary Feedwater System Reliability Analysis was performed in response to the NRC letter of March 10, 1980 from D.F. Ross, Jr., to All Pending Operating License Applicants of Nuclear Steam Supply Systems Designed by Westinghouse and Combustion Engineering. The final analysis was submitted to the NRC by APS letter dated February 10, 1981 from E.E. Van Brunt, Jr., to Director of Nuclear Reactor Regulation.

Essential systems are those systems critical to ensure the capability to mitigate consequences of accidents, to ensure the integrity of the reactor coolant pressure boundary and to ensure the capability to shut down the reactor and maintain it in a safe shutdown condition. Table II.E.4.2-1 lists essential systems penetrating the PVNGS containment. No essential systems are functionally isolated by a containment isolation actuation signal (CIAS) with the exception of the hydrogen control system, as classified in the table. This system is not immediately required for accident mitigation. The isolation valves can be manually opened from the control room as part of the hydrogen recombiner startup procedures.

3. Non-essential systems penetrating the PVNGS containment are listed in table II.E.4.2-2. Non-essential systems are automatically isolated by a CIAS with the exception of the following systems:

   A. Those containing locked closed valves or flanged closed connections.

   B. Main steam and feedwater

   C. Steam generator blowdown and blowdown sample and safety injection drain

   D. RCP seal injection and CVCS charging

The main steam and feedwater systems, while not essential, aid in heat removal during a small LOCA. These systems should not, therefore, be isolated by a CIAS generated on low pressurizer pressure. The steam and feedwater systems are isolated for a main steam line break by a main steam isolation actuation signal (MSIS) on high containment pressure (5 psig) or low steam generator pressure (870 psig).

The steam generator blowdown and blowdown sample systems are isolated by either a MSIS, auxiliary feedwater actuation signal (AFAS) or a safety injection actuation signal (SIAS). The safety injection drain is isolated on a SIAS. Plant parameters which generate SIAS also generate CIAS.

It is desirable to leave RCP seal injection and CVCS charging paths open to provide additional core protection after an accident in which offsite power is available. In addition, the charging pumps can be transferred to emergency power at the discretion of the operator in the event that offsite power is lost. Conversely, it is undesirable to lose charging or seal injection capability during normal operation due to an inadvertent CIAS. The potential release of

fission products through the penetration is not a concern for the following reasons:

(1) Flow is into the containment and RCS.

(2) Check valves inside the containment prevent backflow out of the containment if the charging pumps stop.

(3) The connecting portions of the CVCS outside of containment are designed to Safety Class 2, Seismic Category I standards and have design pressure well in excess of containment design pressure.

(4) The operator has the capability of isolating these lines if continued charging or seal injection proves to be unnecessary.

4. Override of a CIAS signal is available for each containment isolation valve via the control switch for that valve. Resetting of a CIAS does not result in the automatic opening of containment isolation valves. Reopening requires operator action for each valve and does not compromise the containment isolation signal.

5. Item 1 above identifies 5 psig as the containment setpoint pressure that initiates containment isolation. Calculations are in progress confirming that the trip setpoint represents the minimum value compatible with normal operating conditions.

6. Containment power access purge isolation valves satisfy the operability criteria set forth in Branch Technical Position CSB 6-4.

7. As stated in item 1 above, both the power access purge and the refueling purge isolate on high containment purge radioactivity.

II.F INSTRUMENTATION AND CONTROLS

II.F.1 ADDITIONAL ACCIDENT-MONITORING INSTRUMENTATION

A human factor analysis will be performed to ensure that the displays and controls added for additional-accident accomplish this monitoring do not increase the potential for operator error (see section I.D.1). 1

II.F.1.1 ATTACHMENT 1, NOBLE GAS EFFLUENT MONITOR

Position

Noble gas effluent monitors shall be installed with an extended range designed to function during accident conditions as well as during normal operating conditions. Multiple monitors are considered necessary to cover the ranges of interest.

(1) Noble gas effluent monitors with an upper range capacity of 10^5 μCi/cc (Xe-133) are considered to be practical and should be installed in all operating plants.

(2) Noble gas effluent monitoring shall be provided for the total range of concentration extending from normal condition (as low as reasonably achievable (ALARA)) concentrations to a maximum of 10^5 μCi/cc (Xe-133). Multiple monitors are considered to be necessary to cover the ranges of interest. The range capacity of individual monitors should overlap by a factor of ten.

PVNGS Evaluation

FSAR section 11.5 provides detailed descriptions of the effluent monitors installed at Palo Verde Units 1, 2 and 3. This includes 1.

the additional monitors that have been added specifically to address the NUREG-0737 and Reg Guide 1.97, Rev 2 requirements for radiation monitoring.

A. Wide-Range Effluent Monitor

In order to cover the dynamic range required, a normal range monitor is used with a high range monitor. One decade is used for overlap when switching between monitors. Both monitors sample using controlled isokinetic flows. Their combined range is $10^{-6}\mu Ci/cc$ to $10^{+5}\mu Ci/cc$. These monitors are located on the plant vent, main condenser/gland seal exhaust, and the fuel building vent. In addition to noble gas monitoring capability, these instruments have separate particulate and iodine sample chambers for both the low and high range, and use charcoal cartridges in conjunction with a portable pump. All cartridges will be removed to the counting laboratory for gamma spectrum analysis. High range monitor iodine samples are provided with a lead shield. Procedures will be developed to define ALARA concepts for removal, transport and analysis. These monitors have complete digital readout and control from the Health Physics Office and the main control room. The high range monitors automatically switch to a new particulate/iodine cartridge pair when the current cartridge reaches a preset radiation level. Filter materials used minimize absorption of noble gases. Samples are preconditioned as necessary to assure accurate results without damaging the sample assemblies. Each monitor

is controlled by a remote microprocessor. This microprocessor is linked by a "daisy chain" to a minicomputer which provides multiple informational displays on request by the operator. A dedicated alarm status line is maintained on the CRT display. This status line does not move with each change of CRT displays. Thus alarms are provided regardless of the status of the displays in the Health Physics Office and Main Control Room. Monitors are provided with an open structural construction that provides for easy maintenance and good heat dissipation. Backup battery power is provided to assure continued microprocessor memory during a loss of external power sources. Multiple detectors are used to achieve the dynamic range required. Hard copy readouts are available from dedicated printers in the Health Physics office and the control room. 1

B. Main Steam Line Monitor

One area monitor with a collimating lead shield is mounted adjacent to each main steam line in the Main Steam Support Structure. These monitors measure direct dose rates from the main steam line to identify effluent from the atmospheric dump, main steam relief valves, and auxiliary feedwater pump discharge. An extra 2 inches of shielding is placed on the containment side of the detector shield. There are a total of 4 detectors with one remote microprocessor for each 2 detectors. The ion chamber covers a range from 1mr/h to 10^7mr/h. The microprocessor is linked by a "daisy chain" to a minicomputer which provides

multiple informational displays at the request of the operator. Alarms are provided regardless of the status of the displays in the Health Physics Office and the Control Room. Hardcopy readouts are provided from dedicated printers in the Health Physics Office and the Control Room. Backup battery power is provided to assure continued microprocessor memory during a loss of external power sources. The detector is designed to operate in a post-accident environmental condition with a background of 10 R/h.

C. Meeting the NRC Requirement

These monitors operate in conjunction with the other monitors as discussed in FSAR section 11.5 and fulfill the requirements as outlined in NUREG 0737 and Regulatory Guide 1.97, Rev 2.

II.F.1.2 ATTACHMENT 2, SAMPLING AND ANALYSIS OF PLANT EFFLUENTS

Position

Because iodine gaseous effluent monitors for the accident condition are not considered to be practical at this time, capability for effluent monitoring of radioiodines for the accident condition shall be provided with sampling conducted by adsorption on charcoal or other media, followed by onsite laboratory analysis.

PVNGS Evaluation

PVNGS response to this item is included in the evaluation of section II.F.1.1 requirements.

II.F.2 INSTRUMENTATION FOR DETECTION OF INADEQUATE CORE COOLING

Position

Licensees shall provide a description of any additional instrumentation or controls (primary or backup) proposed for the plant to supplement existing instrumentation (including primary coolant saturation monitors) in order to provide an unambiguous, easy-to-interpret indication of inadequate core cooling (ICC). A description of the functional design requirements for the system shall also be included. A description of the procedures to be used with the proposed equipment, the analysis used in developing these procedures, and a schedule for installing the equipment shall be provided.

PVNGS Evaluation

(1) PROCEDURES TO DETECT AND RECOVER FROM CONDITIONS LEADING TO INADEQUATE CORE COOLING

Emergency procedures are being developed which will provide the reactor operators with directions to detect and recover from conditions that could lead to inadequate core cooling and will be in place prior to fuel load. These procedures will be prepared by the NSSS vendor. The procedures will be listed in FSAR section 14.2 later. 1

(2) INADEQUATE CORE COOLING INSTRUMENTATION

Inadequate core cooling monitoring requirements can be met by appropriately measuring and displaying margin to saturation,

reactor vessel water level above the core, and reactor core exit temperatures. In order to accomplish these functions, the PVNGS Unit 1, 2, and 3 design will utilize three instruments: (1) The Subcooled Margin Monitor to measure saturation/superheat margin, (2) The Heated Junction Thermocouple System to monitor level/temperature in the region of the upper portion of the reactor vessel, and (3) Core Exit Thermocouples to measure the temperature of the reactor coolant as it leaves the reactor core.

The Subcooled Margin Monitor is an instrument which indicates the degree of subcooling and superheat in the reactor coolant either in terms of temperature or pressure. The system is designed as a two-channel system, each channel measuring four points within the reactor coolant system as follows:

1

Reactor Coolant Piping Hot Leg Temperature	(1)
Reactor Coolant Piping Cold Leg Temperature	(2)
Pressurizer Pressure	(1)

The range of the Subcooled Margin Monitor is increased by incorporation of signals from the Heated Junction Thermocouple System and the Core Exit Thermocouples such that the instrument can also calculate and display degrees superheat.

The Heated Junction Thermocouple System monitors liquid in the region above the core. Redundant strings of

II.K.3.17 REPORT ON OUTAGES OF EMERGENCY CORE COOLING SYSTEMS LICENSEE REPORT AND PROPOSED TECHNICAL SPECIFICATION CHANGES

Position

Several components of the emergency core cooling (ECC) systems are permitted by technical specifications to have substantial outage times (e.g., 72 hours for one diesel-generator; 14 days for the HPCI system). In addition, there are no cumulative outage time limitations for ECC systems. Licensees should submit a report detailing outage dates and lengths of outages for all ECC systems for the last 5 years of operation. The report should also include the causes of the outages (e.g., controller failures, spurious isolation).

PVNGS Evaluation

Arizona Public Service Company will submit a plan for data collection of outage dates and lengths of outages for ECC systems prior to fuel load of Unit 1.

II.K.3.25 EFFECT OF LOSS OF ALTERNATING-CURRENT POWER ON PUMP SEALS

Position

The licensees should determine, on a plant-specific basis, by analysis or experiment, the consequences of a loss of cooling water to the reactor recirculation pump seal coolers. The pump seals should be designed to withstand a complete loss of alternating-current (ac) power for at least 2 hours. Adequacy of the seal design should be demonstrated.

PVNGS Evaluation

Refer to CESSAR Appendix B, Item II.K.3.2.5. In addition, the reactor coolant pump normal cooling water system (nuclear cooling water system) is backed up by the essential cooling water system to supply cooling water to the seals during loss of ac power. On loss of ac power the nuclear cooling water pumps will stop, but the redundant essential cooling water system, powered from the Class IE redundant power supplies, is available to supply the reactor coolant pump seals with cooling water. The essential cooling water system is described in the PVNGS FSAR Section 9.2.2.

A C-E test program was conducted to determine the effect on the reactor coolant pump seals due to a loss of component cooling water to the pump seal assembly. The test results demonstrate that the pumps will continue to operate for extended periods without exceeding design seal leakage limits and seal

1

temperature limits. It has been shown that the System 80 reactor coolant pumps are capable of operating without component cooling water for 30 minutes without sustaining damage to the pump thrust bearings.

1

(d) Remote interrogation of systems producing meteorological data and effluent transport and diffusion elements.

PVNGS Evaluation

(1) Comply with 10CFR50 Appendix E

The PVNGS Emergency Plan submitted with the FSAR complies with Appendix E, "Emergency Facilities" to 10 CFR Part 50 and to Regulation Guide 1.101 as discussed in FSAR Section 1.8.

The Arizona Division of Emergency Services is currently preparing a comprehensive emergency response plan for fixed nuclear facilities which will incorporate actions to be taken by levels of government within the State of Arizona. This plan is expected to meet the essential elements of NUREG-75/111 and is expected to be forwarded to FEMA for review prior to fuel loading of Unit 1.

(2) Comply with NUREG-0654

The PVNGS Emergency Plan is currently being revised and updated to address the emergency planning criteria contained in NUREG-0654, including the means for providing prompt notification to the public, staffing for emergencies, and an upgraded meteorological program. The comprehensive emergency response plan for fixed nuclear facilities currently being developed by the Arizona Division of Emergency

Services is expected to address the emergency planning criteria contained in NUREG-0654.

(3) Conduct Exercise

Prior to fuel loading of Unit 1, an emergency response exercise will be performed. The Arizona Division of Emergency Services will be invited to participate and major elements of both the PVNGS Emergency Plan and the state emergency response plan for fixed nuclear facilities will be tested.

(4) Meteorological Data

The PVNGS meteorological system is designed to satisfy all requirements set forth in Regulatory Guides 1.23, Rev. 1; 1.97, Rev. 2; and NUREG's-0696, 0654, and 0737.

It will consist of two independent towers, sensors, signal conditioning, amplifiers and processing systems with backup power source. The system includes a highly reliable digital data processor system to develop real time dispersion and transport estimates. Additionally, auxiliary analog information is recorded for all parameters monitored in each independent system locally.

Real time validation of digital meteorological data will identify suspect data so that backup data will be used based on data reasonability by the comparison percentage method.

Data acquisition of the two independent meteorological system signals may be accomplished for projected dose calculations, CRT displays and remote data transmission. The same capability is provided for the nuclear data link. As independant, redundant and validated signals are used, the system can assure a non-availability of 0.01.

Below is a summary table of the sensors used in each independent meteorological system to monitor the environmental parameters, and the common data processing available.

Sensor / Location	195' Wind Speed and Wind Direction Sensor	35' Wind Speed and Wind Direction Sensor	195' & 35' Aspirated Temperature Sensor	35' Aspirated Dewpoint Sensor	Rainfall Monitor Located at Ground Level
Tower System A	Provided	Provided	Provided	Provided	Provided
Tower System B	Provided	Provided	Provided	Not Provided	Not Provided
Digital & Analog Processing	Provided	Provided	35' Ambient Only 195'-35' ΔT	Provided	Provided

The environmental parameters monitored by each independent tower system permits highly accurate and reliable meteorological data necessary to cover all data for the Pasquill stability classes and transport protections needed for the PVNGS site.

The auxiliary analog information for each tower system is provided on analog recorders located at the meteorological

station in the respective tower system equipment trailers. Analog information for each tower system is converted to digital data and transmitted by two serial links to the plant site where the data is reduced to fifteen-minute and hourly average meteorological parameters, and where all effluent and environmental parameters are recorded and available for time history displays in the control room, emergency response facilities, and at external locations. Serial data is also provided to the radiation exposure management system to meet the reporting requirements of Reg. Guide 1.21. In addition, the signal is available to the multi-channel processing system for offsite and projected dose calculation, technical support center and the emergency operations facility CRT displays.

The models used for providing the estimates of offsite exposure are:

1

- Plume exposure - Class A model will be used with 15 minute average meteorology data for initial transport and diffusion estimates within 15 minutes following the classification of the incident.
- Ingestion Zone - Class B model will be used for relative concentration of the plume emergency planning zone (EPZ) and ingestion EPZ.

The output of the processor provides graphic displays of 2, 10, and 50 mile graphics with terrain, major population zones, and a display of environs for radiation monitors located in the plume EPZ. Capability is provided to view this display in the Technical Support Center (TSC), alternate TSC's, and offsite Emergency Operations Facility (EOF). Additional capabilities exist to view this display at selected locations. Supplemental information displayed will be rain meteorological data, numerical outputs, etc.

1

The satellite TSC has the same display capabilities as the main TSC (see figures III.A.1.2-1 and III.A.1.2-2). An analysis will be performed to determine equipment to be incorporated into the TSC to monitor and display the status of the affected unit. Display of data at the TSC will be in accordance with NUREG 0696. The TSC will be habitable to permit occupancy following a loss of coolant accident. Monitoring equipment will be provided for direct and airborne radioactive contaminants to provide warning if radiation levels in the TSC are reaching dangerous levels. The TSC will have permanently installed radiation monitoring and filtered ventilation systems. The nonredundant systems in conjunction with building shielding will ensure that the combined doses from airborne radioactivity and direct radiation meet GDC 19. As-built drawings and other appropriate records will be available in readily retrievable form at the site and will be accessible to the TSC. 1

The Palo Verde Nuclear Generating Station Emergency Plan will be revised to describe the TSC and its function.

C. Emergency Operations Facility (EOF)

An Emergency Operations Facility (EOF) for PVNGS has been established and will be fully operational prior to PVNGS Unit 1 operating license. This facility is located outside of the protected area and occupies approximately 6000 sq. ft. of the basement floor in the Administration Annex Building (see figures III.A.1.2-1 and III.A.1.2-4). The EOF provides space for operations personnel in support of the TSC. Plant personnel will be able to evaluate the magnitude and effect of radioactive 1

releases from the plant and recommend appropriate protective measures. The EOF will have ventilation isolation capability and be shielded against direct radiation. The facility is habitable following a loss of coolant accident. A study will be conducted to determine analysis and monitoring equipment required. Display of data at the EOF will be in accordance with NUREG 0696. Communications with the TSC will be provided.

The EOF provides space for recovery operations following an accident as well as training facilities for the site.

The PVNGS Emergency Plan will be revised to describe the EOF and it's functions.

Implementation of these items will be complete before PVNGS Unit 1 fuel load.

cooling water system (through the shutdown heat exchanger) can be detected by installed radiation monitoring.

C. CVCS Charging and Letdown System

The existing design incorporates all-welded piping. The letdown system is isolated upon CIAS and SIAS. Relief valves on the system relieve to the equipment drain tank.

The leakage from the CVCS charging pumps (positive displacement pumps) and other system equipment is ALARA as they are hard-piped to drains. The nuclear cooling water system is monitored for potential leakage from the CVCS through the letdown heat exchanger during normal operation.

D. Sampling System

The existing design of the normal sampling system incorporates "Swagelok" connections, however, the design will be upgraded to all-welded piping for sections which would come into contact with highly radioactive fluids. The system is isolated upon CIAS and SIAS. Relief valves relieve to the equipment drain tank. Leakage from the system is also minimized by the small size of the lines.

The post-accident sampling system will also be constructed of all-welded piping.

1| E. High-Pressure Injection Recirculation (HPSI)

The design incorporates all-welded piping. Relief valves on the system (external to the containment) relieve to the equipment drain tank. The vent and drain lines throughout the system are capped when not in use. Leakage from the HPSI pump seals and system valve stems is as-low-as reasonably achievable. Miniflow connections to the refueling water tank (RWT) are isolated upon Recirculation Actuation Signal (RAS). Manual cross over valves to the CVCS are normally locked shut.

1| F. Waste Gas System

The waste gas system is isolated from the containment upon CIAS. (The normal vent path from the reactor drain tank (RDT) and the reactor head vent system is isolated.) By design, the introduction of highly radioactive fluids to the system is precluded.

1| G. Other systems containing radioactive materials which are excluded from this program

(1) Radioactive Waste Drain System (RDS):

The RDS is isolated upon CIAS to ensure the liquid radwaste system will not become highly contaminated due to post-transient activities.

(2) Fuel Pool Cooling System (FPC):

The FPC is normally isolated from potentially highly contaminated systems (e.g. SI in recirculation mode) by double, locked shut isolation valves.

As part of the system testing program, each of the above systems is hydrostatically tested to 150% normal operating pressure per the requirements of ANSI B31.1, Summer 1976 Addendum for ANSI B31.1 piping systems, and to 125% normal operating pressure per the requirements of ASME Boiler & Pressure Vessel Code, Section III, 1977 Edition, for ASME piping systems.

Leakage from potentially radioactive systems will be maintained ALARA by testing and maintenance. Required procedures, tests, and administrative controls will be developed prior to fuel load.

III.D.3.3 IMPROVED INPLANT IODINE INSTRUMENTATION UNDER ACCIDENT CONDITIONS

Position

(1) Each licensee shall provide equipment and associated training and procedures for accurately determining the airborne iodine concentration in areas within the facility where plant personnel may be present during an accident.

(2) Each applicant for a fuel-loading license to be issued prior to January 1, 1981 shall provide the equipment, training, and procedures necessary to accurately determine the presence of airborne radioiodine in areas within the plant where plant personnel may be present during an accident.

PVNGS Evaluation

Prior to fuel load, procedures will be developed for determining airborne iodine concentration. Charcoal cartridges will be used in conjunction with a portable pump or a fixed vacuum system. The cartridges will be removed to the counting laboratory for gamma spectrum analysis. Procedures will also define ALARA concepts for removal, transport, and analysis.

PVNGS response to this item is included in the evaluation of section II.F.1 requirements. 1

(g) layout of control room, air intakes, containment building, and chlorine, or other chemical storage facility with dimensions:

see FSAR Figures 1.2-7 and 6.4-1

(h) control-room shielding including radiation streaming from penetrations, doors, ducts, stairways, etc:

shielding study in progress

(i) automatic isolation capability-damper closing time, damper leakage and area:

closing time = 15 sec.

leakage = zero leakage (by bubble test)

area = 12.6 sq ft

(j) chlorine detectors or toxic gas (local or remote):

redundant in C.R. ventilation outside air intake plenum; smoke detectors alert operators for manual operation

(k) self-contained breathing apparatus availability (number):

(l) bottled air supply (hours supply):

(n) control-room personnel capacity (normal and emergency):

PVNGS response to items k, l, and n are undergoing review in light of the personnel manning requirements of section III.A.1.2.

(m) emergency food and potable water supply (how many days and how many people):

Presently, the PVNGS control room design has emergency food and water supply for 6 people for 7 days (within the closed control room). The commitment is being reviewed in response to NUREG 0696 TSC requirements.

(o) potassium iodide drug supply:

This item is being reviewed in response to recent studies which may significantly reduce the post-accident iodine source terms.

(3) Onsite storage of chlorine and other hazardous chemicals:

NOTE: No onsite storage of liquid or gaseous chlorine. It is stored as sodium hypochlorite (solid).

(a) total amount and size of container:

hydrogen:

125,000 SCF @ 2200-2450 psi is stored in fourteen steel cylinders

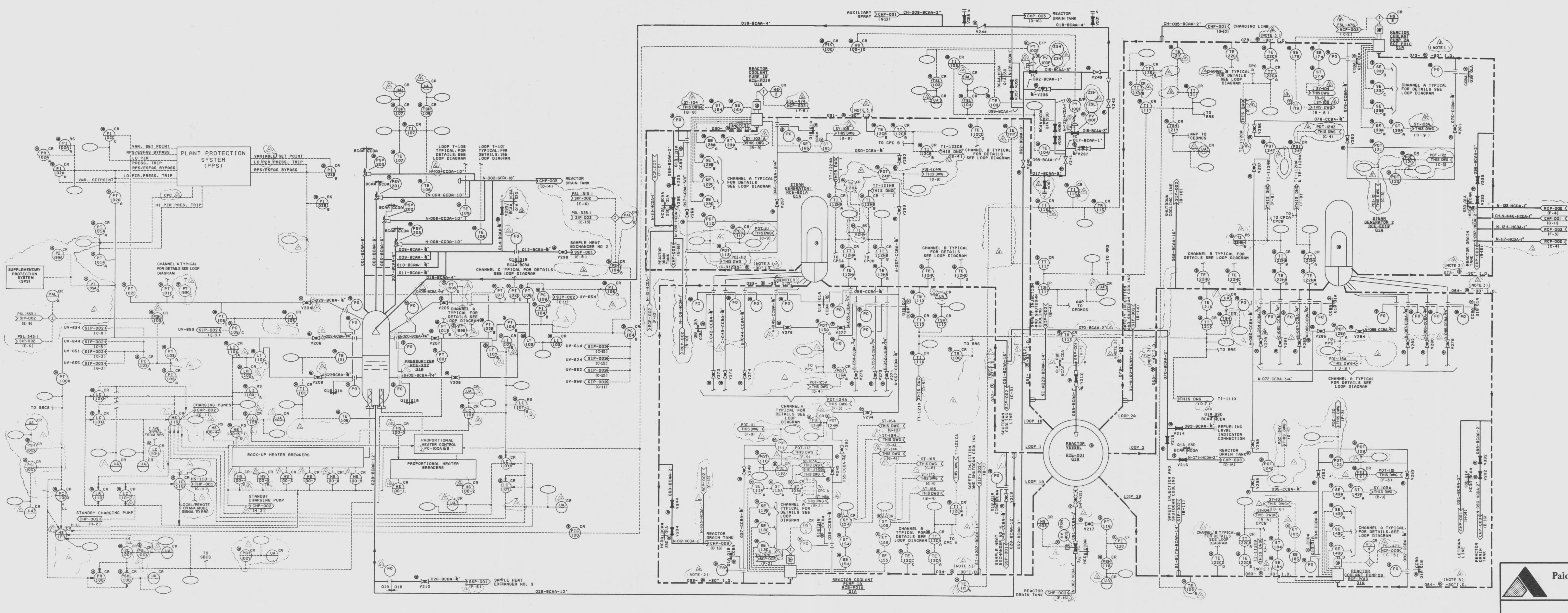

NOTE:

1. ALL GLOBE VALVES SHOWN IN THIS DRAWING HAVE FLOW UNDER THE SEAT.
2. THE SAFETY TRAIN DESIGNATOR E IS TO PRECEDE ALL LINE NUMBERS SHOWN IN THIS DRAWING UNLESS OTHERWISE INDICATED.
3. CE SUPPLIED PIPING DESIGNED FOR 2500 PSIA AND 650°, AND PER CODE REQUIREMENTS OF ASME SECTION III, CLASS 1
4. THIS P&ID IS REDRAWN FROM THE CE SUPPLIED P&ID .PVNGS DRAWING E-14273-310-110. REVISION NO.02

THE SYSTEM DESIGNATOR RC IS TO PRECEDE ALL LINE, VALVE, AND INSTRUMENT NUMBERS SHOWN ON THIS DRAWING UNLESS OTHERWISE INDICATED.

13-M-RCP-001 REV 2

Palo Verde Nuclear Generating Station

REACTOR COOLANT SYSTEM

Figure 2.1.11-2

7910010222-01

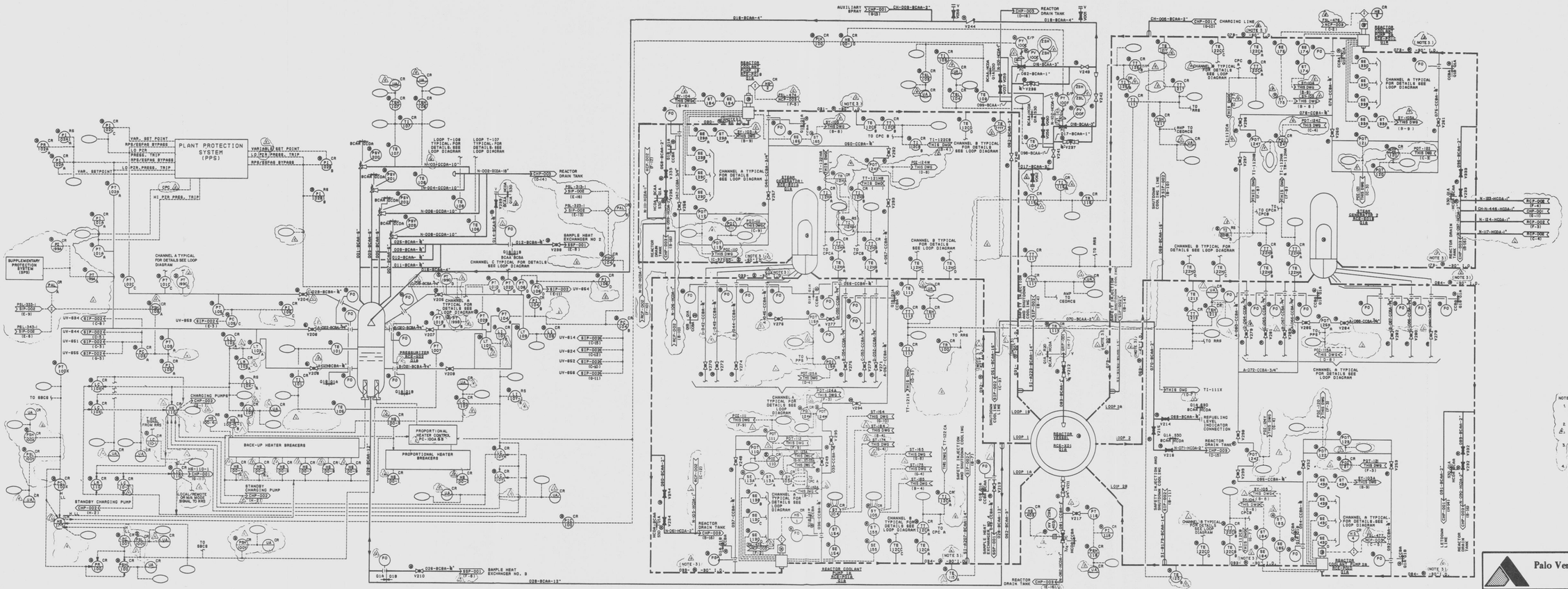

NOTE:

1. ALL GLOBE VALVES SHOWN IN THIS DRAWING HAVE FLOW UNDER THE SEAT.
2. THE SAFETY TRAIN DESIGNATOR E IS TO PRECEDE ALL LINE NUMBERS SHOWN IN THIS DRAWING UNLESS OTHERWISE INDICATED.
3. CE SUPPLIED PIPING DESIGNED FOR 2500 PSIA AND 650°F AND PER CODE REQUIREMENTS OF ASME SECTION III, CLASS 1
4. THIS P&ID IS REDRAWN FROM THE CE SUPPLIED P&ID PYNGS DRAWING E-14279-910-110, REVISION NO. 02

THE SYSTEM DESIGNATOR IS ALTERNATED ALL LINE VALVE AND INSTRUMENT NUMBERS SHOWN ON THIS DRAWING UNLESS OTHERWISE INDICATED.

13-M-RCP-001 REV 2

Palo Verde Nuclear Generating Station

REACTOR COOLANT SYSTEM

Figure 2.1.11-2

D

7910010222-02