RAIO-1017-56703

October 18, 2017

Docket No. 52-048

U.S. Nuclear Regulatory Commission
ATTN: Document Control Desk
One White Flint North
11555 Rockville Pike
Rockville, MD 20852-2738

SUBJECT: NuScale Power, LLC Response to NRC Request for Additional Information No. 194 (eRAI No. 8884) on the NuScale Design Certification Application

REFERENCE: U.S. Nuclear Regulatory Commission, "Request for Additional Information No. 194 (eRAI No. 8884)," dated August 21, 2017

The purpose of this letter is to provide the NuScale Power, LLC (NuScale) response to the referenced NRC Request for Additional Information (RAI).

The Enclosures to this letter contain NuScale's response to the following RAI Questions from NRC eRAI No. 8884:

- 03.09.02-1
- 03.09.02-2
- 03.09.02-3
- 03.09.02-4
- 03.09.02-5
- 03.09.02-6
- 03.09.02-7
- 03.09.02-8
- 03.09.02-13
- 03.09.02-15
- 03.09.02-16
- 03.09.02-17

The responses to questions 03.09.02-9, 03.09.02-10, and 03.09.02-11 will be provided by July 24, 2018.

Enclosure 1 is the proprietary version of the NuScale Response to NRC RAI No. 194 (eRAI No. 8884). NuScale requests that the proprietary version be withheld from public disclosure in accordance with the requirements of 10 CFR § 2.390. The proprietary enclosures have been deemed to contain Export Controlled Information. This information must be protected from disclosure per the requirements of 10 CFR § 810. The enclosed affidavit (Enclosure 3) supports this request. Enclosure 2 is the nonproprietary version of the NuScale response.

This letter and the enclosed responses make no new regulatory commitments and no revisions to any existing regulatory commitments.

If you have any questions on this response, please contact Marty Bryan at 541-452-7172 or at mbryan@nuscalepower.com.

Sincerely,

Zackary W. Rad
Director, Regulatory Affairs
NuScale Power, LLC

Distribution: Gregory Cranston, NRC, OWFN-8G9A
Samuel Lee, NRC, OWFN-8G9A
Marieliz Vera, NRC, OWFN-8G9A

Enclosure 1: NuScale Response to NRC Request for Additional Information eRAI No. 8884, proprietary

Enclosure 2: NuScale Response to NRC Request for Additional Information eRAI No. 8884, nonproprietary

Enclosure 3: Affidavit of Zackary W. Rad, AF-1017-56705

Enclosure 1:

NuScale Response to NRC Request for Additional Information eRAI No. 8884, proprietary

Enclosure 2:

NuScale Response to NRC Request for Additional Information eRAI No. 8884, nonproprietary

Response to Request for Additional Information
Docket No. 52-048

eRAI No.: 8884
Date of RAI Issue: 08/21/2017

NRC Question No.: 03.09.02-1

10 CFR 50, Appendix A, GDC 4 requires structures, systems, and components important to safety shall be designed to accommodate the effects of and to be compatible with the environmental conditions associated with normal operation, maintenance, testing, and postulated accidents. Regulatory guides (RG) describe methods that the NRC considers acceptable to use in implementing the agency's regulations. Per RG 1.20 Rev. 3, evaluate all components potentially susceptible to flow-induced vibration and flow-excited resonances. Comprehensive Vibration Assessment Program (CVAP) Technical Report TR-0716-50439-P, Rev. 0, Section 2 (NuScale Power Module Design Overview for Flow Induced Vibration) describes the reactor internals assessed for flow-induced vibration. Some components are not fully assessed. Also, some flow-induced vibration (FIV) and potential lock-in phenomena are not addressed. Addressing all FIV mechanisms will ensure the safe operations of the reactor internals during the design life; therefore, the NRC staff cannot reach a safety finding until the mechanisms are evaluated.

Provide additional FIV assessments:

a. Vortex shedding over the upper edge of the upper riser, with possible lock-in to upper riser shell modes as well as acoustic cavity resonances. ("Lock-in" refers to a constructive feedback between the flow instability and the acoustic mode over the certain range of flow velocity, leading to strong amplification of the fluctuating pressures in the flow instability and acoustic mode.)
b. Vortex shedding and lock-in with global and local structural modes of the overall upper riser hanger assembly
c. Vortex shedding and lock-in-with global and local structural modes of the control rod drive system (CRDS) support structure and control rod assembly (CRA) guide tube support plate
d. Vortex shedding and lock-in with global and local structural modes of the CRA guide tube assemblies
e. Vortex shedding from downcomer flow over the capsule holders and the lower core support lock plate assemblies, along with potential lock-in with acoustic annulus/lower cavity modes. Also assess possible lock-in of vortex shedding from the upper support blocks with annulus acoustic cavity modes
f. Vortex shedding from core flow over lower core plate ligaments and potential lock-in to

structural and acoustic cavity modes

g. Lock-in of pressurizer spray nozzle jet flow fluctuations with steam volume acoustic resonances. Clarify if the jet plume is subsonic, transonic, or supersonic. Assess nozzle structure high cycle fatigue.

Update the CVAP technical report to include the requested information.

NuScale Response:

Although vortices can be generated for some of the locations specified in RAI 8884 Question 03.09.02-1, the vortices, if generated, do not result in a vortex shedding lock-in condition.

a. Vortices may be generated at the upper edge of the riser; however, as they are only shed from one edge of the structure it is not possible for alternating vortices to form. Without alternating vortices, the alternating forces that are characteristic of vortex shedding lock-in do not occur. Therefore, the upper edge of the riser is not susceptible to vortex shedding. Additionally, lock-in with a cavity is not credible. In accordance with the FIV screening criteria provided in Table 2-3 of TR-0716-50439, a cavity is considered a flow-occluded region where a standing wave could form without being disrupted or dissipated by turbulent flow. Flow in the region above the riser is fully turbulent. Further, this region does not represent a cavity because it contains CRDS, ICIGT, hot leg thermowells, hanger braces, as well as the 1380 SG tubes, per FSAR Table 5.4-2. Therefore, the upper riser is not susceptible to acoustic resonance or vortex shedding, as identified in Table 3-1 of TR-0716-50439.
b. The local modes of the hanger assembly have been assessed in engineering documents. The predicted safety margin is {{ }}$^{2(a),(c),ECI}$. For vortex shedding lock-in to occur due to the alternating vortices that form at the hanger brace, the primary coolant velocity in that region would need to be approximately {{ }}$^{2(a),(c),ECI}$, as opposed to the maximum design flow velocity of {{ }}$^{2(a),(c),ECI}$. Global modes of the hanger assembly have not been considered; however, they have a similar margin as the local modes. When considering global modes, the fundamental frequency is slightly lower due to the weight of the riser assembly. A significant reduction in the fundamental frequency does not occur due to the stiffness provided by the integrated steam plenum. The integrated steam plenum is a {{ }}$^{2(a),(c),ECI}$ thick structure which supports the hanger assembly and transfers loads to the reactor pressure vessel shell. Based on the high margins for this region and the expected similarities in the value of the local and global structural modes, vortex shedding analysis of the hanger assembly considering global structural modes was not performed.
c. The global modes of the control rod drive shaft supports and CRAGT supports have been evaluated and safety margins of {{ }}$^{2(a),(c),ECI}$ and {{ }}$^{2(a),(c),ECI}$ determined, respectively, based on a global modal assessment of the supports. The

global frequency is lower than any local region frequency of the support; therefore, it is not necessary to evaluate the local structural modes to determine a bounding predicted safety margin.

d. The global modes of the CRAGT have been determined, and the predicted safety margin to vortex shedding lock-in is {{ }}$^{2(a),(c),ECI}$. Local structural modes were not considered because they result in significantly higher frequencies than the global fundamental frequency, and are consequently less conservative.

e. The capsule holders, lower core support lock plate assembly, and upper support block components are not a concern for vortex shedding lock-in due to the component stiffnesses. The most flexible component analyzed for vortex shedding that is located in the downcomer is the cold region thermocouple. This component demonstrates considerable margin ({{ }}$^{2(a),(c),ECI}$) to the lock-in condition limit. Components such as core support blocks have even greater margin since the free stream velocities and characteristic lengths are similar. For acoustic resonance, lock-in is evaluated for the reactor recirculation valve ports and flow instrument cavities. There are no other flow-occluded regions in the downcomer where it is credible that vortices could result in an acoustic resonance. Due to the turbulent flow in the downcomer, any vortices that are generated at structural features are dissipated before a standing wave could form.

f. The lower core plate is similar to the CRAGT support plate and the control rod drive shaft supports, in terms of the flow velocities and the structural response. The ligaments in the lower core plate are larger, which increases the margin to lock-in. Further, while the lower core plate was screened for vortex shedding, the flow downstream of this component is separated by the fuel nozzles. It is not credible that vortices shedding off either side of a ligament could produce a lock-in condition, since the vortices shed from the lower core plate are separated into different flow streams.

g. Fluctuations in pressurizer spray flow are not expected. Spray flow is delivered from the chemical and volume control system (CVCS) from the same source that provides normal, continuous CVCS injection flow to the hot leg riser. A significant variation in the spray flow is not expected because the CVCS is a forced flow system. The pressurizer is maintained at 1850 psia, which is only a few pounds less than the pressure of the fluid in the CVCS injection line. Based on the small difference in pressure, choking does not occur at the pressurizer spray nozzle. A phase change does not occur at the nozzle. Pressurizer spray is not a typical “jet plume” like the rupture of a high energy pipe because the pressurizer is not at atmospheric conditions. The fluid entering the steam space of the pressurizer is subsonic. The spray flow decreases primary pressure by remaining a liquid and condensing the pressurizer steam that it contacts. The pressurizer is saturated steam so via a heat balance the spray in the pressurizer, at most, reaches saturated conditions. Flow vibration fatigue is not an issue at this location. Consistent with other pressurized water reactor designs, thermal fatigue is the primary structural concern in this region.

Impact on DCA:

There are no impacts to the DCA as a result of this response.

Response to Request for Additional Information
Docket No. 52-048

eRAI No.: 8884
Date of RAI Issue: 08/21/2017

NRC Question No.: 03.09.02-2

10 CFR 50, Appendix A, GDC 4 requires structures, systems, and components important to safety shall be designed to accommodate the effects of and to be compatible with the environmental conditions associated with normal operation, maintenance, testing, and postulated accidents. Regulatory guides (RG) describe methods that the NRC considers acceptable to use in implementing the agency's regulations. Per RG 1.20 Rev. 3, prototype designs should consider all possible significant FIV loads. Describe analysis methods and provide benchmarking of analysis methods. Section 3.2.2 (Vortex Shedding) of CVAP TR-0716-50439 only a brief summary of the VS assessments is provided and no benchmarking is discussed. Also, several components and possible lock-in scenarios are not included. Without the detailed description of analysis and addressing all FIV mechanisms, the NRC staff cannot reach a safety finding.

Evaluate structures and acoustic volumes for lock-in with vortex shedding sources (see Question 03.09.02-1). Note that flow vortices can form for flow over cavities and steps, along with the reinforcing vortices shed from bluff bodies and foils that NuScale discusses in Rev. 0 of CVAP TR-0716-50439. Note also that vortices can lock into acoustic volume modes as well as the structural modes that NuScale discusses in Rev. 0 of CVAP TR-0716-50439. Provide detailed assessments of all evaluated components, including those described in Questions 03.09.02-1, along with end-to-end (final vibration/strain/pressure) uncertainty/bias assessments based on comparisons to available measurements. If measurements of NuScale components are not yet available, benchmark the modeling and analysis methodology(s) quantitatively against other components as similar to NuScale components as is practical, such as separate effects testing. Provide expected date(s) for test report submission(s). Include susceptible structural and/or acoustic mode shapes and frequencies, assumed damping, and flow velocity calculations. Provide plots of nondimensional flow velocity (U/fD) vs. mass damping ratio for the limiting modes of all evaluated components. Consider the full range of flow, temperature, and pressure conditions associated with normal steady-state and anticipated transient operation, where normal operation spans the full range of possible load-based power levels and flow conditions.

Update the CVAP technical report to include the requested technical information.

NuScale Response:

Although vortices can be generated for some of the locations specified in RAI 8884 Question 03.09.02-1, the vortices, if generated, do not result in an acoustic resonance condition. Each component discussed below is identified and screened for the FIV mechanisms in Section 2.3 of TR-0716-50439. However, none of these components are susceptible to acoustic resonance per the screening criteria identified in Table 2-3 of TR-0716-50439.

- Vortices may be generated at the upper edge of the riser; however, lock-in with a cavity is not credible. In accordance with the FIV screening criteria, a cavity is considered a flow-occluded region where a standing wave could form without being disrupted or dissipated by turbulent flow. Flow in the region above the riser is fully turbulent. Further, this region does not represent a cavity because it contains CRDS, ICIGT, hot leg thermowells, hanger braces, as well as the 1380 SG tubes, per FSAR Table 5.4-2.
- As the flow area above the upper riser and below the integrated steam plenum is not a cavity, generation of an acoustic resonance condition due to the vortices shed from the hanger assembly is not possible.
- There is no cavity region downstream of the CRAGT support plate where an acoustic resonance could form. As shown in Figures 2-14 and 2-16 of TR-0716-50439, the downstream regions contain the CRDS, CRDS supports and ICIGT. The region is the only flow path transporting primary coolant from the core exit to the entrance of the SG tube region. Flow is fully turbulent and any vortices generated from ligaments of the support plate dissipate in the flow.
- There is no cavity region in the CRAGT assembly where an acoustic resonance could form. The CRAGT assembly is shown in Figures 2-16 and 2-17 of TR-0716-50439. The CRAGT is designed to allow flow to pass in and out of the guide tube. There are no flow-occluded regions and any vortices that form are dissipated by the turbulent flow.
- There is no cavity region downstream of the capsule holders, upper support blocks, or lower core support lock plate assemblies where an acoustic resonance could form, as shown in Figure 2-18 of TR-0716-50439. Figure 2-2 of TR-0716-50439, shows that the downcomer region is an annular flow path that delivers flow from the SG tube region to the core region. Any vortices generated in the downcomer region are eliminated by the turbulent flow.
- There is no cavity region downstream of the lower core plate where an acoustic resonance could form. The structures downstream of the lower core plate are primarily narrow flow channels composed of fuel assemblies. It is not credible that an acoustic resonance could form in this region due to the highly turbulent conditions downstream of the lower core plate.
- Jet flow fluctuations do not occur at the pressurizer spray nozzle, and flow vortices are not generated. See the response to RAI 8884 Question 03.09.02-1 for a discussion of the thermal hydraulic conditions associated with spray flow into the pressurizer region.

As described in the technical report, the NuScale approach for evaluating acoustic resonance (AR) is to demonstrate that under all scenarios, AR is avoided for components that meet the screening criteria. The standard design methods to avoid AR are described in Section 3.2.4 of TR-0716-50439. These methods were developed based on experimental results, as discussed in textbooks by Blevins and Au-Yang, and industry operating experience has demonstrated their validity. Based on these considerations, benchmarking is not required to demonstrate that the methods are acceptable. Acoustic resonance benchmarking testing is not performed.

The use of acoustic modes to determine the susceptibility to an acoustic resonance condition is discussed in Section 3.2.4 of TR-0716-50439: “To determine if there is a concern for AR, the piping locations where this source of flow excitation is possible are identified and the Strouhal number is calculated for each location.” The numerator of the Strouhal number contains the term for the fundamental acoustic frequency for the region being evaluated.

Acoustic mode shapes, mass damping ratios and damping are not used in AR analysis; therefore, these parameters are not addressed in the technical report. The full range of operating conditions has been considered, and these are discussed in Section 3.1.2 of TR-0716-50439.

Impact on DCA:

There are no impacts to the DCA as a result of this response.

Response to Request for Additional Information
Docket No. 52-048

eRAI No.: 8884
Date of RAI Issue: 08/21/2017

NRC Question No.: 03.09.02-3

10 CFR 50, Appendix A, GDC 4 requires structures, systems, and components important to safety shall be designed to accommodate the effects of and to be compatible with the environmental conditions associated with normal operation, maintenance, testing, and postulated accidents. In section 4.1 (Separate Effects Testing) of CVAP TR-0716-50439 only a brief summary of the planned separate effects testing is provided. Without the detailed description of analysis and testing, the NRC staff cannot reach a safety finding.

Provide the CVAP Measurement Program Report and all Test Plans or Preliminary Results Reports, which should include separate effects testing operating conditions, test durations, instrument types and locations, applicable testing hold points, and pre-test predictions of the expected and allowable experimental results, considering bias errors and random uncertainties (B/U). Explain how end-to-end B/U (vibration/strain/pressure) calculated from comparing pre-test predictions to the test results, as well as bias errors associated with differences between the effects testing and full-scale operation (e.g., air- filled instead of water/steam-filled SG tubes, low instead of high temperature/pressure operation), have been applied to the design FIV analysis results and how updates will be/have been made to the margin of safety estimates. Explain how any reductions in margin of safety will be/have been addressed. Finally, Section 6.2 of ER-A010-2085, Rev. 0 states: “Preliminary FIV analysis indicated that the CRAGT [control rod assembly guide tube] is the most susceptible component within the RVI [reactor vessel internals] to FIV degradation. A test program (to) measure the component’s deformation under flow has been outlined in Ref. 1.5.45 (TSD-T070-8245, Rev. 3, “Flow induced vibration of NuScale Control Rod Assembly Guide Tube”).” However, following this discussion the following appears: “To minimize the expense of the RVI development efforts, it is desired to minimize the scope and quantity of the separate effects testing. This effort will push the majority of the testing work to the pre-operational tests.” Explain what specific testing work is being deferred to pre-operational testing and reconcile this statement with the previous comment that ‘…the CRAGT is the most susceptible component … to FIV degradation.” What are the potential impacts of deferring the testing to the pre-operational tests? How will the CRAGT FIV analysis be assured by deferring testing? How will NuScale demonstrate the reliability of the CRAGT structure prior to placing it inservice for pre-operational and start-up testing? Describe the overall reactor conditions for the pre-operational test phase for CRAGT testing.

NuScale Response:

A description of the validation efforts that are conducted via separate effects testing, factory testing, and initial startup testing is being documented in two subsequent technical reports. The content of those technical reports is discussed in Section 1.1, Section 2.4, Section 4.1.2, and Section 7.0 of TR-0716-50439:

"*To finalize the CVAP, two additional technical reports are developed. The first report contains the measurement program details for each prototype test, including test operating conditions, test durations, instrument types and locations, applicable testing hold points, and pre-test predictions of the expected and allowable experimental results, considering bias errors and random uncertainties. The second report provides the post-test evaluation of the testing completed to support the measurement program. In the second report, the differences between the expected and measured experimental results are either resolved or confirmed to be in the analytically-predicted allowable ranges. The second report also documents the inspection program results."*

The control rod assembly guide tube (CRAGT) and associated reactor vessel internal sub-components are not tested as a part of the control rod assembly (CRA) testing. The CRA testing is focused on the control rod assembly fingers and rodlets, which are part of the reactor core system and not analyzed under the CVAP program. The CRA guide tube and associated reactor vessel internal sub-components demonstrate more than 100% safety margin for the susceptible mechanisms and do not require validation testing. This clarification has been incorporated in Section 3.2.3, Table 3-8, Table 3-9, Section 4.0, Table 4-1, and Section 4.1 of TR-0716-50439. Section 4.1.3 of TR-0716-50439 has been deleted.

The measurement program validation testing consists of separate effects testing of the steam generator and steam generator inlet flow restrictor, factory testing of the control rod drive shaft and the in-core instrument guide tubes, and initial startup testing of the decay heat removal system piping. These tests are identified in Table 4-1 of TR-0716-50439. There is no pre-operational testing to be performed. The reliability of the CRAGT is demonstrated by the bounding nature of the FIV analysis combined with the large predicted safety margins. Additionally, inservice inspections of the CRAGT are performed in accordance with FSAR Section 5.2.4.1 and FSAR Table 5.2-7. As discussed in Section 4.0 of TR-0716-50439, components with more than 100 percent margin do not require measurement validation. The NuScale analysis program approach is to perform a screening of the NuScale power module components exposed to flow and bounding FIV analyses. The NuScale measurement program approach is to test the most limiting components. Additionally, for components that do not require testing due to large safety margins, the inspection program confirms that the testing performed on more limiting components bounds the performance of the non-tested components.

Impact on DCA:

TR-0716-50439 Section 3.2.3, Section 4.0, Section 4.1, and Section 4.1.3 and Table 3-8, Table 3-9, and Table 4-1 have been revised as described in the response above and as shown in the markup provided with this response.

the characteristic length is determined. A bounding correlation length range is determined based on literature review. Similar to the convective velocity, the range of correlation lengths is evaluated to ensure a bounding value is selected for each component forcing function.

The PSD is determined to support characterization of the forcing function. The PSD as applied to flow-induced turbulent response refers to the energy distribution of a variable as a function of frequency. Many components can be approximated as cylinders in cross flow or annular flow. For these idealized arrangements, bounding PSDs based on literature are used. Table 3-9 summarizes the PSD types that are applied to components susceptible to TB. The overall analytical uncertainty for the SG tubes is~~and the CRAGT region are~~ judged to be the highest relative to other susceptible components; therefore, prototype testing is performed to verify the adequacy of the PSDs used for the SG tubes ~~and CRAGT~~.

In the TB evaluations, the vibration amplitude is not calculated for components with a first mode frequency greater than 200 Hz because vibration amplitudes are insignificant with high structural frequencies. Vibration amplitude is also not determined for components that based on flexibility and flow conditions can be shown to be bounded by the analyzed components. Therefore, no PSD is specified in Table 3-9 for certain components identified as susceptible to TB in Table 3-1.

Table 3-9 Turbulent buffeting power spectral density inputs used in analysis

Flow Type and Component Shape	Applicable Components	Literature PSD Used
Parallel flow over isolated cylinder	{{	Equation 3-2
Tube bundle cross-flow		Equation 3-3
Bounding annular flow	}}2(a),(c),ECI	Equation 3-1

Note(s) for Table 3-9:

1. Testing is performed to verify that the pressure PSD due to internal two-phase flow is sufficiently bounded by the pressure PSD for single-phase flow to justify use of the single-phase pressure PSD used in the analysis.
2. ~~The lower riser region represents the most complex flow path in the RCS loop and it is possible that some components may be exposed to significant crossflow. Testing is performed to verify that the PSD used is sufficiently bounding.~~

Equation 3-1 is from Reference 8.1.3. It provides a PSD for components with annular and axial flow velocities. It is applied to some components that experience crossflow, and this simplification is bounding based on the frequencies and characteristic lengths of the analyzed components. Due to the relatively low flow velocities, the reduced frequency for some components is larger than five. For those cases, the PSD is evaluated with a reduced frequency of five to provide bounding results.

where:

$G_P(f)$	=	PSD of the turbulent pressure as a function of modal frequency (psi^2/Hz) and
F	=	Reduced frequency (-).

The structural response due to the turbulence is calculated using the inputs that have been discussed. Equations to determine the root mean square (RMS) response are assigned based on the direction of the flow and the dimension of the structure. Using the RMS response, degradation mechanisms associated with impact and fatigue are evaluated. Components with less than one inch of separation are evaluated for impact. Components with fundamental frequencies less than 200 Hz and those whose response cannot be bounded by nearby components exposed to similar turbulent conditions~~that are thin or flexible~~ are evaluated for fatigue.

The acceptance criterion for a component remaining separated from an adjacent component is that the clearance is greater than 5σ RMS deflection. For components that do not meet the criterion, the surface stress is calculated and an impact fatigue assessment is performed. In addition to the impact fatigue, TB can cause fatigue due to vibration stresses. However, due to the very low vibration amplitudes and alternating stresses, the vibration stresses do not result in fatigue usage for any component susceptible to TB. Out of the components analyzed for TB, four components are shown to impact their adjacent supports and are discussed below.

Impact between the SG tubes and SG tube support is predicted to occur, and the fatigue usage due to vibration and impact is calculated to be {{ }}$^{2(a),(c),ECI}$ which provides a margin of safety of {{ }}$^{2(a),(c),ECI}$ This result demonstrates adequate SG tube performance for the component design life, subject to verification testing of analytical inputs and safety margin as identified in Table 3-10.

Impact between the ICIGT and the CRDS supports, between the CRDS and CRDS supports, and between the CRAGT and the guide tube support is predicted to occur. For all three impact pairs, the results show that the RMS vibrations do not result in fatigue usage due to the displacements themselves or due to impact. These results are due to the very low alternating stresses generated from the TB, which can be primarily attributed to the low-flow velocities.

Table 3-10 provides an overview of the analysis results and required testing. ~~Although analysis demonstrates 100 percent margin of safety for the CRAGT, separate effects testing is still planned to provide additional validation in the TB analysis. See Section 4.1.3 for additional testing details.~~

Table 3-10 Turbulent buffeting results summary

Component	Contact Occurs?	Fatigue Margin (%) Note 1	Items to Verify	Verification Method and Testing Phase	Test
SG helical tubing	yes	{{ }}2(a),(c),ECI	Frequencies mode shapes vibration amplitude	Separate effects	SG FIV (Section 4.1.2)
ICIGT	Yes	100	N/A	N/A	N/A
CRDS	Yes	100	N/A	N/A	N/A
~~CRAGT assembly~~	~~Yes~~	~~100~~	~~Vibration amplitude~~	~~Separate effects~~	~~CRAGT test (Section 4.1.3)~~

Note(s) for Table 3-10:

1. Safety margin is reported based on the margin to the allowable fatigue usage based on the predicted fatigue usage due to vibration and/or impact.

3.2.4 Acoustic Resonance

Acoustic resonance is evaluated for the steam plenums and nozzles, main steam isolation valves, SGS piping, CNTS piping, DHRS piping, and at valve and instruments ports. It was determined that AR is not possible at the steam plenums and nozzles. The flow through these nozzles prevents the formation of shear waves and AR in these cavities. The MSIVs are an unlikely source of pressure fluctuations associated with AR because the MSIVs are directly mounted on the steam piping with no standpipe. The only locations that flow excitation due to AR may be possible are at the branch lines and cavities at the following locations:

- the closed side branches from the CNTS steam tee to the DHRS actuation valves
- the closed side branches from the SGS feedwater tee to the DHRS condenser
- RCS instrument and valve ports

Sources of AR developed inside the tubes due to density wave oscillation (DWO) is precluded by the design of the SG tube inlet orifices. If DWO were not precluded, DWO acoustic waves would not be expected to affect the steam plenum or piping because frequencies are less than 0.5 Hz, which is well below the component and piping AR frequencies.

Acoustic resonances due to the generation of shear waves at closed branch lines are evaluated with the following methodology. To determine if there is a concern for AR, the piping locations where this source of flow excitation is possible are identified and the Strouhal number is calculated for each location. To determine the margin to AR, the calculated Strouhal number is compared to the range of Strouhal numbers that could lead to the onset of AR. A Strouhal number between 0.35 and 0.62 could lead to the onset of AR.

- SG helical tubing: Testing to validate the safety margin for fluid elastic instability, vortex shedding, and turbulent buffeting is performed as a separate effects test. See Section 4.1.2 for additional details.

- SG tube inlet flow restrictors: Testing to validate that LFI is precluded is performed in a separate effects test. See Section 4.1.1 for additional details.

- ICIGT: Testing to validate safety margin for VS is performed as a factory test. See Section 4.2 for additional details.

- CRDS: Testing to validate safety margin for VS is performed as a factory test. See Section 4.2 for additional details.

- ~~CRAGT: Testing to provide an assessment of the vibration performance is performed as a separate effects test. See Section 4.1.3 for additional details.~~

Table 4-1 Analysis program verification testing and inspections

NPM Component Category	Component	Susceptible Mechanisms	Mechanisms with less than 100% Safety Margin	Prototype Testing		
				Separate Effects	Factory	Initial Startup
Components exposed to secondary side flow	SGS piping, nozzle, MSIVs	AR	-	-	-	-
	SG steam plenum Note 3	AR	-	-	-	-
	DHRS steam piping	AR	AR	-	-	DHRS steam piping testing
	DHRS condensate piping	AR	-	-	-	-
	SG helical tubing Note 3	FEI, VS, TB	FEI, VS, TB	SG FIV testing	-	
	SG tube inlet flow restrictors	LFI, TB	LFI	SG flow restrictor FIV testing	-	-
SG tube supports	SG tube support bars	TB Note 2	-	-	-	-
	SG lower tube support cantilevers	VS, TB, F/G Note 2	-	-	-	-
Upper riser assembly	Upper riser section	TB	-	-	-	-
	Riser section slip joint	TB	-	-	-	-
	ICIGT	VS, TB Note 2	VS	-	CRDS and ICIGT in-air frequency testing	-
	CRDS	VS, TB Note 2	VS	-		-

NPM Component Category	Component	Susceptible Mechanisms	Mechanisms with less than 100% Safety Margin	Prototype Testing		
				Separate Effects	Factory	Initial Startup
	CRDS support	VS, TB	-	-	-	-
	Hanger brace	VS, TB	-	-	-	-
Other RVI	PZR spray RVI	TB	-	-	-	-
	CVCS injection RVI	VS, TB	-	-	-	-
	RRV port	AR	-	-	-	-
	Thermowells Note 4	VS, TB	-	-	-	-
	Instrument ports	AR	-	-	-	-
	Flow diverter	TB	-	-	-	-
Core support assembly	Core barrel	TB	-	-	-	-
	Upper support block	VS, TB	-	-	-	-
	Fuel pin interface	TB	-	-	-	-
	Core support block	VS, TB	-	-	-	-
	Reflector	TB	-	-	-	-
Lower riser assembly	Lower riser section	TB	-	-	-	-
	CRAGT support plate	VS, TB	-	~~CRAGT FIV testing Note 1~~ -	-	-
	CRAGT assembly	VS, TB	-		-	-

Note(s) for Table 4-1:

~~1. CRAGT flow testing is not required per the acceptance criteria in this report, but is being performed because it is recognized that the CRAGT represents a unique region of the RVI in terms of the flow conditions and geometry, and it is desirable to verify the response of the component with testing and to verify analytical inputs and results to the extent practical.~~

2. Mechanism does not require verification due to predicted safety margin; however, test results will be available due to other required testing and will be used to validate inputs, methods and safety margin to the extent practical.
3. Component is exposed to primary and secondary coolant flow.
4. Thermowells are located in the RCS and in NPM piping exposed to secondary coolant flow.

4.1 Separate Effects Testing

Separate effects tests are planned for components that are judged to have the highest susceptibility to FIV based on the analysis program results. Performing separate effects testing, which is isolated full-scale mockup testing of the NPM components of interest, is advantageous because it provides the most accurate method to verify the FIV performance of these components before the prototype NPM is fabricated. This plan allows design changes prior to fabrication, if necessary. Separate effects testing for the SG tube inlet flow restrictor~~,~~ and SG tube bundle~~, and the CRAGT is~~ are performed. A summary of the testing scope and objectives are summarized in the following sections. The specific test details, such as operating conditions, test durations, instrument types and locations, applicable testing hold points, and pre-test predictions of the expected and allowable experimental results, considering bias errors and random uncertainties, will be provided in the CVAP Measurement Program Report.

4.1.1 Steam Generator Tube Inlet Flow Restrictor Test

This separate effects test provides an assessment of the vibration performance of the SG tube inlet flow restrictors. The test results are used to verify acceptable performance against LFI. Although verification for TB is not required because impact is not predicted to occur, the testing results may be used to verify TB analysis inputs and methods for this component, to the extent practical.

Single-tube tests are performed at a range of flow rate conditions corresponding to SG tube flow rates between 1 percent and 110 percent of design flow. The tests are run at low temperature and pressure conditions. Corrections for these test conditions are performed analytically to demonstrate acceptable performance at full power operating conditions.

4.1.2 Steam Generator Flow Induced Vibration Test

The full-scale mockup of the SG tube bundle has five prototypic helical columns and supports. This separate effects test provides an assessment of the vibration performance of the SG tubes and tube supports to aid in demonstrating that FEI and VS are not active sources of flow excitation at the equivalent full-power normal operating conditions. Consistent with the discussion in Section 4.0, the SG tube bundle testing will not achieve the TH conditions corresponding to the predicted onset of the phenomena. However, the testing will provide validation of analytical inputs such as frequency and mode shape. The damping ratio associated with the tube-to-tube support interaction with amplitudes of vibration equivalent to those at full-power normal operating conditions will also be determined with this test to allow the verification of this FIV input used in the analyses. The response of the tube bundle to flow excitation due to TB will be measured, as well as the primary-side flow PSD to verify this input and the analytical results for the tube.

The tests include in-air frequency measurements, in-water frequency measurements, and flow testing of the full-scale five column model.

The following simplifications are adapted into the design of the SG tube bundle mockup facility. While these represent deviations from full-power normal operating conditions, these differences are judged to either not affect the vibration results or corrections can be performed analytically to account for these differences.

- Because the objective of this test is to characterize FIV resulting from single-phase primary flow, testing with a fluid at room temperature is sufficient to define the modal frequencies, the damping ratio, and the PSDs. A correction to these FIV inputs to account for the effect of the fluid properties at a higher temperature is performed analytically.
- Tests are performed at low pressure. Pressure has been demonstrated to have an insignificant effect on tube frequencies and the other FIV inputs.
- The tests are performed using a tube bundle with five helical coil columns as compared to 21 columns in the NPM design. Five columns are chosen as a reasonable number of tubes to enable the fluid-structure interaction with adjacent tubes. Further, five columns of tubes are sufficient for the development of a representative level of turbulence in the primary fluid to characterize the PSD for the analysis of TB.
- Tests are run with air inside the tubes. The actual frequencies would be affected by the added mass and flow of water and steam within the tubes. This change in frequency can be predicted analytically.
- It is unknown if the secondary-side boiling inside tubes could create a turbulent response of the tube; however, it is expected that this forcing function is uncorrelated with the tube and a response to this source of excitation would not be expected. Testing without a fluid that is boiling on the inner diameter of the tube will ensure the most accurate determination of the FIV inputs acting on the outer diameter of the tube (e.g., PSD and correlation length).
- The SG tubes are fabricated from Type 304 stainless steel in lieu of Alloy 690 material. Corrections to the damping ratio to account for differences associated with these material differences will be made to provide justification for the damping ratio that will be used in the FIV analyses.

In addition to the testing described above, flow testing results are required to validate the secondary-side PSD applied to the inside of the SG tubes in the TB evaluation. This is planned as a separate effects test included within the steam generator FIV testing scope; however, the specific testing details required to validate the secondary-side PSD are not identified in this section and are provided in the measurement program technical report.

~~4.1.3 Control Rod Assembly Guide Tube Test~~

~~This separate effects test provides an assessment of the vibration performance of the CRAGT. Although more than 100 percent margin of safety is demonstrated for this component against the vortex shedding and turbulent buffeting FIV mechanisms, testing~~

~~is performed to provide additional assurance that sufficiently bounding inputs have been used in the analysis.~~

~~The scope of the separate effects testing is to measure vibration amplitudes of the CRA fingers and rodlets as a function of inlet-flow velocity, which provides data for validating the response of these structures to TB and VS. This test is being performed because it is recognized that the CRAGT represents a unique region of the RVI that may not be best characterized using existing literature approaches. Vibration measurements are taken at five flow rates up to 150 percent of the full-power primary-coolant flow rate.~~

4.2 Lead Unit Factory Testing

During the factory testing phase, testing is performed to verify component natural frequencies. Due to the natural circulation design of the NPM, it is not possible to perform flow testing without using temporary systems to provide the required primary and secondary-flow conditions necessary to validate portions of the analysis program. Design and installation of temporary systems to achieve full-power flow conditions prior to initial startup testing is impractical. Because the NPM components are subjected to low velocities characteristic of natural circulation and there are large factors of safety for susceptible components, flow testing of NPM components is not performed prior to the initial startup test phase.

4.2.1 In-Air Component Frequency Testing

In-air frequency tests are performed on the prototype NPM to determine the natural frequencies of the CRDS and ICIGT. The fundamental frequency for these components requires verification in order to justify the margin obtained in the VS analysis. Because damping is not used in VS analysis of these components and hydrodynamic mass can be approximated analytically using accepted empirical correlations, it is acceptable to validate the fundamental frequencies of the prototype using in-air testing.

4.3 Lead Unit Initial Startup Testing

Initial startup testing is performed on the first NPM after the first fuel load. Due to the natural circulation design of the NPM, it is not possible to obtain the limiting TH conditions that are necessary to verify the FIV inputs and results until the NPM is operating near full-power conditions. Initial startup testing will be performed for a sufficient duration to ensure one million vibration cycles for the component with the lowest structural natural frequency. It is expected to take less than two days to obtain one million cycles of vibration. This is a conservative estimate because the lowest natural frequency of any component evaluated in the CVAP is approximately {{ }}2(a),(c),ECI.

The initial startup test will be performed with online vibration monitoring of the DHRS steam piping. Testing of this piping section is performed in accordance with the requirements of Part 3 of ASME OM-2012, Division 2 (OM Standards). In the event that an unacceptable vibration response develops any time during initial startup testing, the test conditions will be adjusted to stop the vibration and the reason for the vibration

Response to Request for Additional Information
Docket No. 52-048

eRAI No.: 8884
Date of RAI Issue: 08/21/2017

NRC Question No.: 03.09.02-4

Per RG 1.20 Rev. 3, describe analysis methods and quantify bias errors and uncertainties. Bias errors and uncertainties can be estimated by comparison of analysis and test results (i.e. benchmarking). Section 3.1.1 (Structural Natural Frequency and Mode Shapes) of CVAP TR-0716- 50439 only a brief summary is provided, and no benchmarking is discussed. Without the detailed description of analysis and testing, the NRC staff cannot reach a safety finding.

Provide detailed information on structural natural frequencies and mode shapes for all components evaluated for FIV, along with bias/uncertainty (B/U) assessments based on comparisons to available measurements. In particular compare mode shapes and natural frequencies of the SG assembly in the SIET TF-2 (NP-ER-A014-1630, Rev. 1, “SIET Helical coil steam generator test program, electrically heated test facility design”) to simulations made using modeling procedures consistent with those used to model the NuScale SG. If measurements of other NuScale components are not available, benchmark the modeling and analysis methodology(s) quantitatively against other components as similar to NuScale components as is practical. Given the comments made in Appendices G.2, G.3, and G.4 of EC-A014- 3306, Rev. 1 regarding the potential design changes to tube supports that may affect the tube boundary condition modeling, give particular attention to uncertainty of natural frequency simulations and bias/uncertainty associated with boundary condition variability. Note this request is irrespective of the cited margins of safety in the CVAP.

NuScale Response:

As identified in Table 3-2 of TR-0716-50439, structural natural frequencies or mode shapes are required to support fluid elastic instability, turbulent buffeting, flutter/gallop and vortex shedding analyses. These parameters are determined either using hand calculations, for components with simple geometries and boundary conditions, or using the software tool ANSYS.

Hand calculation methods to determine natural frequencies use formulas that are found in industry-standard references such as Blevins and Roark. These hand calculation methods include conservatisms in the simplifications and input parameters in order to bias the frequency

---

results and produce a bounding result. The benchmarking of equations that are acceptably used throughout industry is judged to be unnecessary.

ANSYS is used for modal analysis. ANSYS has undergone benchmarking to meet the NuScale software quality and NQA-1 requirements. At NuScale, ANSYS Mechanical is qualified as a pre-verified program (including modal analysis) and run on configuration managed computer systems.

Further, for components where the safety margin is less than 100%, the frequency and modal analysis results may have safety significance with respect to the analysis program results. These frequencies and mode shapes, as applicable, are verified in the measurement program. Bias errors and uncertainties are considered in the pre-test predictions for the validation testing. This is discussed in Section 4.0 of TR-0716-50439.

Validation of the steam generator tube frequencies and mode shapes is identified in Table 3-9 and Section 4.1 of TR-0716-50439. Due to the non-prototypic aspects of the steam generator tube and tube support designs in SIET TF-2, the steam generator flow induced vibration testing is an appropriate test to support the validation efforts. Accordingly, comparison of mode shapes and frequencies of the SIET TF-2 thermal hydraulic test facility with analytical predictions is not planned.

Appendix G of the cited engineering calculation contains discussion of drawing recommendations. Any time drawing changes are made, affected calculations, including the single tube modal analysis and the downstream flow induced vibration analyses, are revised if the change could have an effect on the calculation results. It is possible that there will be minor changes to aspects of the steam generator tube support design in the future, especially as NuScale engages with manufacturing partners. Modifications are assessed in accordance with the NuScale Design Control process. A revision to TR-0716-50439 is made if any aspect of the analysis methods or results that are addressed in the technical report changes.

Impact on DCA:

There are no impacts to the DCA as a result of this response.

Response to Request for Additional Information
Docket No. 52-048

eRAI No.: 8884
Date of RAI Issue: 08/21/2017

NRC Question No.: 03.09.02-5

10 CFR 52.47 requires the design certification applicant to include a description and analysis of the structures, systems, and components (SSCs) sufficient to permit understanding of the system designs. Section 3.1.2 (Flow Velocity) of CVAP TR-0716-50439 only a brief summary is provided, and no benchmarking is discussed. RG 1.20 Rev. 3 outlines the level of detail needed, including a description of the analysis methods and comparison of analysis and test results to establish bias errors and uncertainties (i.e. benchmarking). Without the detailed description of analysis and testing, the NRC staff cannot reach a safety finding.

Provide detailed information on flow velocities for all components evaluated for FIV, along with uncertainty/bias assessments based on comparisons to available measurements (such as the completed "separate effects testing" cited in Section 3.1.2.3). Computational fluid dynamics (CFD)-based velocities are preferred, as they should include the effects of any pressure gradients and blockages on flow distributions. Provide limiting velocities for the full range of flow, temperature, and pressure conditions associated with normal steady-state and anticipated transient operation (note that full power/maximum flow rate may not be the limiting condition for lock-in, fluid-elastic instability, and other strong FIV sources). In particular, provide velocity measurements from the testing program described in Section 3.5.5 of ER-A010-2158, Rev. 0 (i.e. “The flow path through the control rod assembly guide tubes (CRAGT), including the control rod assembly (CRA) cards and the CRDS and ICIGT [in-core instrument guide tube], which pass through the CRAGT, is the most tortuous of any section of the RVI…Therefore a testing program has been developed to determine the necessary flow information, including velocities, necessary to support FIV analysis of the CRAGT.”) Also include information for Emergency Core Cooling and Decay Heat Removal conditions. Note this request is irrespective of the cited margins of safety in the CVAP.

Update the CVAP technical report to include the requested information.

NuScale Response:

A table of velocities for the FIV components has been added to Section 3.1.2.3 of the CVAP

---

technical report (TR-0716-50439). The table provides the average velocity for the different regions of the RCS loop based on the maximum design flow rate. Velocities for normal operating transients are addressed in Section 3.1.2.2 of TR-0716-50439. The velocities during these transients are bounded by the maximum design flow rate. During analysis, an additional five percent margin is added to the maximum design flow to further bound transient velocities.

Due to the natural circulation design of the RCS loop, the primary flow rate depends on the pressure losses and coolant temperature distribution. The two largest pressure losses in the RCS loop are from the flow around the steam generator tubes and through the fuel assemblies. These two sources of pressure loss combined are greater than {{ }}$^{2(a),(c),ECI}$ of the total RCS loop losses. Separate effects tests for pressure losses have been performed for the NuScale steam generator and fuel assemblies to benchmark loss coefficient correlations. The uncertainties in the separate effects test results translate into corresponding uncertainties in the loss coefficient correlations.

The thermal hydraulic analysis discussed in Table 3-4 of TR-0716-50439 uses the loss coefficients for the steam generator and fuel assemblies, as well as other losses in the RCS loop, based on empirical correlations for standard geometries and friction factors. The thermal hydraulic analysis simultaneously solves for the coolant temperature distribution and the maximum design flow. For the maximum design flow, the steam generator and fuel assembly loss coefficients are biased based on the uncertainty in the loss coefficient correlations. The other pressure losses are decreased to be bounding. Other factors such as the wall roughness, core bypass flow, and steam generator heat transfer are biased to provide a bounding primary coolant flow rate. The maximum design flow rate discussed in Section 3.1.2.1 of TR-0716-50439 is based on inputs that are benchmarked against test data and/or based on bounding assumptions.

The thermal hydraulic analysis used to calculate the maximum design flow rate provides average velocities. As identified in Table 3-4 of TR-0716-50439, CFD based velocities are used for the FIV analyses. The CFD analysis uses the maximum design flow rate to determine the magnitude of local velocities for locations of interest in the RCS loop. The local velocities are predominantly axial. The axial flow ensures that the average magnitude of the velocity calculated by the CFD analysis matches the average velocity calculated by the one dimensional thermal hydraulic analysis.

The maximum design flow rate represents the most limiting flow rate for the FIV mechanisms as discussed in Section 3.1.2.1 of TR-0716-50439. Bounding fluid temperatures are assumed where appropriate so that analyzing a range of temperatures is not required. Pressure has a negligible effect on coolant properties for the range of thermal hydraulic conditions that are relevant. Therefore, sensitivities on this parameter were not assessed.

The cited testing program in the RAI 8884 Question 03.09.02-5 for the CRAGT is no longer required. CRA guide tube and associated reactor vessel internal sub-components demonstrated

more than 100% safety margin for the susceptible FIV mechanisms and do not require validation testing. This clarification has been incorporated in the CVAP technical report as part of the response to RAI 8884 Question 03.09.02-3.

Per FSAR Section 3.9.1, events that include actuation of the DHRS are ASME Service Level B events. Per NCA-2142.4 of the ASME Boiler and Pressure Vessel Code (BPVC), this level of event does not affect the operation of the plant or result in damage requiring repair. The DHRS is the primary safety system credited in the Chapter 15 analyses for removing decay heat after the transient initiation. FSAR Sections 15.1.1, 15.1.2, and 15.1.3, as well as the associated figures, provide an overview of DHRS operation. FSAR Figure 15.2-5 provides a representation of the effect of DHRS operation on the primary coolant flow rate. Due to the natural circulation design and the reduced DHRS heat removal following a reactor trip, as compared to the steam generators during normal power operation, the primary coolant flow rate is reduced during DHRS operation. Therefore, transient conditions associated with DHRS operation are bounded by the analyses at the maximum design flow rate.

Per FSAR Section 3.9.1, the operation of the ECCS in response to a small break loss of coolant accident is classified as a plant-wide ASME Service Level C event. Spurious operation of the ECCS is also an ASME Service Level C event. The ECCS is credited in Chapter 15 analyses for some unplanned decreases in reactor coolant inventory. FSAR Sections 15.6.5 and 15.6.6, as well as the associated figures, provide an overview of ECCS operation. As shown in FSAR Figures 15.6-50, 15.6-58 and 15.6-59, operation of the ECCS normally results in a decrease in primary coolant flow rate. The exception is the case of the spurious (inadvertent) actuation where flow rates are higher than the maximum design flow conditions for about 10 seconds at the beginning of the blowdown. Per NCA-2142.4 of the ASME BPVC, due to their severity and infrequent occurrence, Service Level C events are allowed to cause deformations that require repair. Although not expected, some damage due to FIV is allowed for ECCS events. Service Level C events do not contribute to the calculated fatigue usage for components analyzed to Section III of the ASME BPVC.

Impact on DCA:

TR-0716-50439 Section 3.1.2.3 has been revised as described in the response above and as shown in the markup provided with this response.

Table 3-4 Flow conditions input summary

Analysis Category	Assumed Conditions	Analysis Method
FEI	Maximum design flow – average velocity	TH
VS	Maximum design flow – average velocity	CFD Note 1
	Design flow at 102% – average velocity assuming low SG superheat performance	TH Note 4
AR	Maximum design flow – average velocity	CFD
	Design flow at 102% – average velocity assuming low SG superheat performance	TH Note 4
F/G	Maximum design flow – average velocity	CFD
LFI	None Note 2	None
TB	Maximum design flow – average or maximum velocity Note 3	CFD

Note(s) for Table 3-4:

1. For the VS analysis of the SG tubes, the TH inputs are used, consistent with the FEI analysis.
2. LFI confirmation is by prototype testing only.
3. Either average or maximum velocities are chosen for each component in TB analysis based on achieving the most bounding convective velocity for the purpose of impact and fatigue evaluations.
4. For the evaluation of AR and VS mechanisms for components exposed to secondary coolant flows, the TH flow is used (CFD is not performed to characterize secondary side flow).

Table 3-5 lists representative average velocities based on CFD analysis at the maximum design flow. The analysis categories and components that use the CFD results are identified in Table 3-4.

Table 3-5 Maximum design flow velocities based on CFD

Flow Region	Average Velocity (in/s)
Around/Through CRAGTs	{{ }}2(a),(c),ECI
CRAGT Support	{{ }}2(a),(c),ECI
Bottom of Conic Riser Transition	{{ }}2(a),(c),ECI
CRDS Support	{{ }}2(a),(c),ECI
Upper Riser	{{ }}2(a),(c),ECI
Flow Over the Top of the Upper Riser	{{ }}2(a),(c),ECI
Top of Conic Downcomer Transition	{{ }}2(a),(c),ECI
Bottom of Conic Downcomer Transition	{{ }}2(a),(c),ECI
Downcomer, around Core Barrel	{{ }}2(a),(c),ECI

Response to Request for Additional Information
Docket No. 52-048

eRAI No.: 8884
Date of RAI Issue: 08/21/2017

NRC Question No.: 03.09.02-6

10 CFR 52.47 requires design certification applicants to demonstrate how operating experience insights have been incorporated into the plant design. The NRC has published a lessons learned document regarding the failures of the SONGS replacement steam generators (EA-13-083, 20 Sep 2013, ADAMS ML13263A271). The key conclusion is that tube motion due to Fluid Elastic Instability and/or random vibration caused contact and wear, particularly for in-plane motion of the U-bend region (an unexpected occurrence). The root cause was insufficient contact forces between tubes and support plates, retainer bars and Anti-Vibration Bars (AVBs) leading to much longer free tube lengths and lower resonance frequencies as well as more wear at the interfaces. Without the detailed description of SG tube and support design and analysis, the NRC staff cannot reach a safety finding.

Given the NRC SONGS SG failure lessons learned document, provide a quantitative description of how the NuScale SG design will not experience problems similar to those of the SONGS replacement SG. Consider random (turbulent buffeting and internal turbulent swirling two-phase flow) and tonal (vortex shedding, FEI, etc.) vibration of the tubes, tube support bar assembly, supper tube support bar, and lower tube support cantilevers. Explain how sufficient tube to structure contact forces are ensured to avoid longer than expected unsupported tube sections and lower resonance frequencies. Provide the tolerances/fits between tubes and tube support bar assembly, tube support bar/cantilevers, and other constraints at normal and transient operating conditions, including extreme thermal hydraulic conditions. Show that calculated internal secondary coolant void fraction and damping estimates are conservative, particularly in steam and multi-phase flow sections. How long do the separate effects or startup testing need to be to gather sufficient statistics to confirm the fatigue usage analyses (1E6 cycles are unlikely to be sufficient, unless contact occurs at each cycle)? How will inspection be done given the difficulties of examining such tightly packed systems?

Update the CVAP technical report to include the requested information.

NuScale Response:

A description of the NuScale steam generator (SG) design and an explanation of the approach to SG modal analysis and FIV analyses follow.

Explanation of NuScale SG design

The NuScale SG design is discussed in FSAR Section 5.4.1. It differs from standard recirculating and once-through steam generators. The SG tubes are supported by 21 sets of 8 tube support bar assemblies. The tube support bar assemblies are vertical bars that extend through the tube bundle from the feed to the steam plena. They provide full-circumferential support of the tubes. The circumferential spacing of the support bars is optimized to provide the minimum possible tube free span lengths given the fit constraints with the steam and feed plena and tube transition regions. Shorter tube free span lengths ensure that SG tube modal frequencies are sufficiently high to preclude unacceptable damage due to flow induced vibration. The circumferential support is not continuous however, in order to facilitate flow and limit the number of crevices between the tube and support that are susceptible to buildup of corrosion products. As shown in FSAR Figures 5.4-6 and 5.4-7, the support bar assemblies are located between each column of helical tubes, providing radial separation between the tube columns and tube support from adjacent bars. Also, each support bar assembly contains stamped tabs that envelop part of the circumference of the tubes, and provide three points of contact for every tube (one above and two below or two above and one below, depending on the tube row), assuring vertical support and separation. The stamped tabs that extend beyond the tube provide an interlock contact surface with the adjacent support, as shown in FSAR Figure 5.4-7. This coupling joins the SG tube support bars together in the circumferential direction.

The SG lower tube support cantilevers provide circumferential restraint for the tube support bar assemblies but not vertical support, because they do not contact the support bar assemblies. The SG tube support bar assemblies and SG tubes are held by the upper tube support bars. The support bar assemblies, upper tube support bars and lower tube support cantilevers are designed to be thicker and stiffer than the SG tubes and thus have significant safety margin to FIV mechanisms, per the conclusions in Section 3.2 of TR-0716-50439.

As identified by the EA-13-083 cause evaluation, the industry U-bend design practice applied flat bar (anti-vibration bar) supports because of advantages such as decreased tube-to-anti-vibration bar wear rates. However, experience with SONGS replacement SGs shows that flat bar supports do not adequately restrict in-plane tube motions. The NuScale SG tube support bar assemblies are designed to prevent out of plane tube-to-tube wear by separating the tube columns radially, and the tube support bar tabs prevent in-plane tube-to-tube wear by separating the tubes axially. The NuScale SG design also requires small clearances between the SG tubes and tube support column tabs at three points of contact, which ensures that there

are contact forces to prevent inactive supports and unacceptable tube-to-tube support wear.

As discussed in FSAR Section 5.4.1.6, the NuScale SG tube wall thickness is thicker than existing SG designs, and the use of Alloy 690 SG tubing mitigates SG corrosion compared to Alloy 600 used in other SG designs. Also, the reactor coolant flowrates in the NuScale NPM are an order of magnitude lower than flowrates across the SG in PWR recirculating steam generators, such as the SONGS design. This low flow rate reduces the turbulent flow energy available to cause FIV degradation of the SG tubes.

The NuScale SG features discussed above were developed from lessons learned and operating experience, and are designed to ensure structural integrity against damage and degradation due to FIV, such as those problems observed for the SONGs replacement SGs.

SG Tube FIV and Modal Analyses

Technical Report TR-0716-50439 provides the assessment of the susceptibility of the steam generator (SG) components to flow induced vibration. Based on the screening criteria, the SG tubes are susceptible to fluid elastic instability (FEI), vortex shedding (VS), and turbulent buffeting (TB), as shown in Table 3-1 of TR-0716-50439. The susceptibility to FIV of the SG tube support bars, SG lower tube support cantilevers, and SG tube inlet flow restrictors is also provided in Table 3-1.

The FIV analyses for FEI, VS, and TB use the results of single SG tube modal analyses performed using ANSYS. The single tube analyses include the innermost column (Column 1), outermost column (Column 21), and the center column (Column 11). Separate bounding cases are analyzed with respect to the displaced water mass and mass contained inside the tubes. It is assumed that the tube is either filled completely with steam or completely with liquid water. In reality, there are regions of water and steam inside the tube and the two-phase fluid provides some amount of damping. The vibration responses using water and steam density values bound the response with the actual void fraction. Note that the TB damping ratio is considered in the primary and secondary side mean square responses in the TB analysis, and the damping ratio used in the FEI and VS analyses is applied to the total mass of the tube.

Also, separate analyses are conducted for the displaced water mass on the primary side, with the entire tube region assumed to be surrounded by a uniform fluid density representing either the hot leg (top of SG) or cold leg (bottom of SG) temperatures. The bounding modal analysis results are used to determine the safety margins for FEI, VS, and TB. This approach is considered conservative, because the NuScale approach avoids errors in actual computed void fractions and qualities by using bounding water or steam qualities.

SG Tube Damping Considerations

Section 3.1.3 of TR-0716-50439 states that for FEI and VS analyses of the SG tubes, the damping ratio is expected to be 1.5 percent, based on guidance in the ASME Boiler and

Pressure Vessel Code Section III, Appendix N, Paragraph N-1331.3. A smaller damping ratio of 0.5 percent is used in the TB analysis for the SG tubes. Regulatory Guide 1.20 states that damping coefficients greater than 1 percent should be supported by experimental measurements. Therefore, prototype testing is planned to confirm the FEI and VS damping ratio for the SG tube as discussed in Section 4.1.2 of TR-0716-50439.

Susceptibility to FEI and VS summaries

Clearances are provided between the SG components to allow for thermal expansion, manufacturability, ease of assembly, and support of adjacent components. As part of the response to RAI 8884 Question 03.09.02-17, Section 2.3.2.1 of TR-0716-50439 has been updated to include a discussion of the SG component clearances, and Figure 2-11 has been added to show the locations of the clearances and component interfaces. Due to the manufacturing process of the SG tube support bars, the radial and vertical clearances between the SG tube and the tube support column tabs may vary slightly. For the TB fatigue analysis, a minimum clearance of {{ }}$^{2(a),(c),ECI}$ is used, which considers expected manufacturing tolerances. A particular clearance is not modeled for the FEI and VS analyses, rather an inactive tube support is considered; i.e. for one tube support bar no contact is assumed between a tube and its three surrounding tube support tabs. The SG separate effects testing is conducted to validate that the clearances provide acceptable tube to support contact forces, to avoid longer than expected unsupported tube sections. As part of the CVAP measurement program, allowable variations in manufacturing tolerances are defined such that they are bounded by the validated FIV safety margins.

Although unlikely given the tube support design described above, an inactive tube support is considered in the modal analysis. Depending on the tube row number, this either consists of two lower tabs and one upper tab, or one lower tab and two upper tabs. For the inactive tube support condition considered in the SG FEI and VS calculations, all three support tabs are considered to be inactive. Since the clearances between the tube and the tab in each direction are small, it is unlikely that all three tube support tabs could be inactive. If only one tab is inactive, the modal analysis results are not significantly affected, due to the close spacing of the three tabs. Also, the stiffness of the tubes is low and with the small clearances, any load applied such as gravity and the reactor coolant cross flow cause the tubes to contact the supports, thus avoiding longer than expected unsupported tube sections. The ends of the tubes in the feed and steam plena are welded to a thick tube sheet and therefore they are always fixed in all degrees of freedom, and thus are fully supported in these regions.

An inactive tube support increases the tube free span and decreases the tube's natural frequency, which makes the tube more susceptible to FEI and VS. The frequencies and mode shapes for a single tube and for an inactive tube support configuration in Columns 1, 11, and 21 are analyzed for FEI and VS with bounding fluid densities, as noted in the modal analysis discussion above.

According to EA-13-083, it was determined that the SONGS replacement steam generators were under-designed with regard to margin to vibration and that the lack of margin was largely due to under-prediction of gap velocity and void fraction by the Mitsubishi FIT-III code analysis. In the NuScale FEI and VS analyses, the cross-flow velocity is based on bounding conditions. {{

}}$^{2(a),(c),ECI}$ to determine the cross-flow velocity, and five percent margin is added to represent changes in velocity during transient events. See FSAR Section 5.1.4 for discussion of the primary coolant flow rate determination. The FEI and VS analyses also consider the helix angle when determining the vertical velocity, since tubes respond to the external flow velocity that is perpendicular to the axis of the tube.

Turbulent Buffeting Analysis Validation

Vibration due to FEI and VS is precluded by design, as demonstrated in NuScale analyses and to be validated by the CVAP measurement and inspection programs. Degradation mechanisms are not evaluated for these strongly-coupled FIV mechanisms based on this design approach. Turbulent buffeting represents a weak coupling between a structure and the random pressure fluctuations induced by turbulent flow, and is not precluded in the NuScale design. The effects of low amplitude structural vibrations induced from turbulence are evaluated to assess impact and fatigue.

The vibration measurement program is discussed in Section 4.0 of TR-0716-50439. Separate effects testing is performed on prototypic portions of the design. Pre-test predictions for the prototype tests are performed to ensure that the test design is sufficient to validate the analysis program. Section 4.1.2 of TR-0716-50439 states that for validating the TB analysis of the SG tubes, the response of the tube bundle to flow excitation due to TB is measured, and the primary and secondary side flow power spectral densities (PSDs) verified. The root mean square (RMS) response and the PSD are two of the important parameters for turbulence-induced vibration assessment, and are component dependent, thus they are verified by measurement.

The impact stress calculation is dependent on the RMS response, and the fatigue usage calculation utilizes the ASME material specific fatigue curves from Appendix I of the ASME Boiler and Pressure Vessel Code, Section III. These curves are modified to account for a Rayleigh distribution in the RMS vibration, which produces RMS fatigue curves consistent with those in industry-standard references, such as Au-Yang. Validation of the RMS fatigue curves used in the SG TB analysis is not necessary, since SG tube integrity is periodically monitored during the operating life as part of the steam generator program, according to COL Item 5.4-1. FSAR Section 5.4 and Section 1.5.1.3 give additional information about SG tube inspections.

As discussed in Section 5.0 of TR-0716-50439, the inspections performed after initial startup testing provide a secondary confirmation of the FIV integrity of the NPM components. Initial startup testing will provide at least one million cycles of vibration. The calculations to document

the required test duration to meet one million cycles for the limiting NuScale Power Module component are to be documented in the CVAP Measurement Program Technical Report.

In conclusion, this response addresses how the NuScale SG differs from traditional recirculating SG designs, such as the replacement SONGS SGs. The NuScale SG is designed to prevent unacceptable damage and degradation due to FIV. Analyses are performed and validated to ensure bounding conclusions regarding the susceptibility of SG components to the relevant FIV mechanisms.

Impact on DCA:

There are no impacts to the DCA as a result of this response.

Response to Request for Additional Information
Docket No. 52-048

eRAI No.: 8884
Date of RAI Issue: 08/21/2017

NRC Question No.: 03.09.02-7

Per RG 1.20 Rev. 3, describe analysis methods and quantify bias errors and uncertainties. Bias errors and uncertainties can be estimated by comparison of analysis and test results (i.e., benchmarking). Section 3.2.4 (Acoustic Resonance) of CVAP TR-0716-50439 only a brief summary of the AR assessments is provided and no benchmarking is discussed. Without the detailed description of analysis and testing, the NRC staff cannot reach a safety finding.

Provide detailed assessments of all evaluated acoustic cavities subject to flow-induced resonance, including those described in Question 03.09.02-1, along with end-to-end (final vibration/strain/pressure) uncertainty/bias assessments based on comparisons to available measurements. If measurements of NuScale components are not available, benchmark the modeling and analysis methodology(s) quantitatively against other components as similar to NuScale components as is practical. Note that acoustic resonance (AR) is not limited to branch lines in piping and can occur in cavities and annuli (such as the annulus containing the SG) within the pressure vessel. A detailed assessment of the decay heat removal system (DHRS) steam lines with 29% factor of safety is needed. Include susceptible acoustic mode shapes and frequencies, assumed damping, and flow velocity calculations. Provide plots of resonance frequencies vs. expected flow speeds for all evaluated cavities. Consider the full range of flow, temperature, and pressure conditions associated with normal steady-state and anticipated transient operation, where normal operation spans the full range of possible load-based power levels and flow conditions. Note this request is irrespective of the cited margins of safety in the CVAP. Update the CVAP technical report to include the requested information.

NuScale Response:

See the response to RAI 8884 Questions 03.09.02-1 and 03.09.02-2 for a discussion of regions susceptible to acoustic resonance.

The most limiting condition for acoustic resonance occurs at the fundamental acoustic frequency and the maximum design flow conditions. This represents the highest flow rate at which the NuScale Power Module is designed to operate. A plot of higher frequencies and lower

flow rates for each region shows a range of less-limiting results and higher safety margins. Therefore, a plot of resonance frequencies versus expected flow speeds is not necessary.

The full range of temperature conditions that are present under the limiting flow rate conditions are assessed in the acoustic resonance analysis, as temperature affects the acoustic frequency of the cavity. Pressure has a negligible effect on the speed of sound and density for the range of thermal hydraulic conditions that are relevant for the normal operating primary and secondary coolant conditions; therefore, sensitivities on this parameter were not assessed.

Design analysis is performed with bounding inputs and assumptions, and bias errors and uncertainties are considered in the validation analysis scope. The only component that is to be tested for acoustic resonance is the DHRS steam piping, and this is scheduled to occur during the initial startup test phase.

Benchmarking of the acoustic resonance analysis is not performed, consistent with the approach for all other flow induced vibration mechanisms analyzed in the analysis program. The NuScale approach to developing the CVAP analysis program was to use existing literature analytical methods combined with a bounding selection of inputs and assumptions to demonstrate acceptable performance. NuScale FIV design analysis methods are sourced from the ASME Boiler and Pressure Vessel Code, Blevins, and Au-Yang. These methods have been developed based on experiments and have been used throughout industry, including in previous CVAP programs submitted by other vendors.

There was no need to develop proprietary, innovative analysis methodologies because the literature approaches for evaluating these mechanisms are readily available and are not analytically burdensome. Furthermore, with the low velocities provided by the natural circulation design, there was no reason to develop proprietary analytical approaches. FIV is a much lower concern for the NuScale design compared to forced flow reactor designs, and it is possible to use existing methods combined with bounding assumptions to obtain acceptable results. NuScale does not use proprietary testing to inform the FIV analytical methodologies in order to achieve higher accuracy, predictive (i.e. best-estimate) analytical results. Acceptable results can be shown using proven, bounding methods.

Components with lower margins undergo testing to demonstrate that the margins of safety determined in the analysis program are acceptable. In the CVAP measurement program, testing is performed to validate the key aspects of fluid elastic instability, vortex shedding, turbulent buffeting and acoustic resonance analyses. Then, inspections are performed on all susceptible components prior to and following initial startup testing to ensure that no vibration-induced damage is observed. Consistent with Regulatory Guide 1.20, Rev. 3, analytical methodologies are validated via the measurement program and checked in the inspection program.

Based on the use of industry-accepted literature analysis approaches, a bounding selection of analysis inputs and assumptions, and performing testing as a part of the measurement program to verify that the analysis program results are appropriate for the limiting components,

benchmarking of the individual FIV mechanism analytical methods was not performed.

Impact on DCA:

There are no impacts to the DCA as a result of this response.

Response to Request for Additional Information
Docket No. 52-048

eRAI No.: 8884
Date of RAI Issue: 08/21/2017

NRC Question No.: 03.09.02-8

10 CFR 50, Appendix A, GDC 4 requires structures, systems, and components important to safety shall be designed to accommodate the effects of and to be compatible with the environmental conditions associated with normal operation, maintenance, testing, and postulated accidents. Section 3.2.5 (Leakage Flow Instability) of CVAP TR-0716-50439 is incomplete. Only a brief summary of the leakage flow instability (LFI) assessments is provided. However, a longer description of LFI issues that may occur in the NuScale internals is provided in EC-A010-2230, Rev. 0. In that document, the following components are listed as potentially being susceptible to LFI: SG tube inlet flow restrictor, CRDS, ISP to CRDS, ICIGT, and Riser Section Slip Joint. In the conclusions of the document the following statements are made: "Unlike acoustic resonance and flutter/gallop, no generically valid acceptance criteria could be identified for LFIV as (1) this complex phenomenon is very sensitive to the structure geometry and the flow conditions and (2) analytical methods involve complex mathematical equations and computational simulations that may need to be validated with testing. As a result, a thorough literature review needs to be performed to identify papers that would apply to the NuScale components geometry and flow characteristics." Without the detailed description of the LFI analysis, the NRC staff cannot reach a safety finding. Provide the subsequent literature review and any updates to the LFI assessments of the potentially susceptible components. Also, provide the results of the separate effects test that was performed to assess LFI for the inlet SG flow restrictor. Provide the test results along with the chosen flow restrictor design.

Update the CVAP technical report to include the requested information. Also include a drawing of the flow restrictor in the DCD.

NuScale Response:

The engineering report cited in the RAI 8884 Question 03.09.02-8 has been superseded. The current version of the engineering report does not cite the control rod drive shaft, the in-core instrument guide tubes, or the riser section slip joint as regions of the NuScale Power Module that are susceptible to leakage flow induced vibration (LFI). These regions are located in the natural circulation primary coolant loop. Pressure losses across these components are

---

negligible, which mitigates the concern for LFI in accordance with Table 2-3 of TR-0716-50439. The pressure losses in the primary coolant loop are discussed in FSAR Sections 5.1.4 and 4.4.4.5.1.

The current version of the engineering report does not make statements regarding the need for literature reviews or the need to develop an analytical approach for assessing LFI. Because only one component in the NuScale design screens for LFI, testing is the appropriate approach to demonstrate acceptable performance.

The steam generator inlet flow restrictor (SGIFR) testing that has been performed was focused on thermal hydraulic performance of a set of possible designs. It was subsequently determined that the testing is not sufficiently prototypic to support the CVAP measurement program, and based on this the SGIFR testing is to be re-performed. Testing design information and predictions are to be provided in the CVAP measurement and inspection program report, which is scheduled to be completed prior to the start of CVAP SGIFR testing. Section 2.5 of Regulatory Guide 1.20 suggests that "*The preliminary and final reports, which together summarize the results of the vibration analysis, measurement, and inspection programs, should be submitted to the NRC within 60 and 180 days, respectively, following the completion of vibration testing."* NuScale will submit a draft of the CVAP results report to the NRC within 60 days following the completion of SGIFR testing, and a final version within 180 days. However, the schedule for performance of the SGIFR testing has not yet been determined.

A discussion of the flow restrictor design is provided in FSAR Section 5.4.1.2 and a drawing is provided in FSAR Figure 5.4-8.

Impact on DCA:

There are no impacts to the DCA as a result of this response.

Response to Request for Additional Information
Docket No. 52-048

eRAI No.: 8884
Date of RAI Issue: 08/21/2017

NRC Question No.: 03.09.02-13

10 CFR 50, Appendix A, GDC 4 requires structures, systems, and components important to safety shall be designed to accommodate the effects of and to be compatible with the environmental conditions associated with normal operation, maintenance, testing, and postulated accidents. TR-0716-50439, Rev. 0, Section 3.2.3 (Turbulent Buffeting) states that "thin or flexible structures are evaluated for fatigue." These criteria are vague. Without the detailed description of the analysis criteria, the NRC staff cannot reach a safety finding. Provide quantitative criteria for evaluating structures for fatigue. Update the CVAP technical report to include the requested information.

NuScale Response:

Detailed analysis for the turbulent buffeting mechanism was not performed for all of the components that screen as susceptible to turbulent buffeting. Some components experience lower frequency and higher amplitude vibrations that are more limiting for the degradation mechanisms evaluated. These degradation mechanisms include impact and fatigue assessments. Components do not require detailed evaluation of the turbulent buffeting mechanisms when the results of the more limiting components bound the components with less susceptibility.

Two criteria are used to determine which components require evaluation for turbulent buffeting, and subsequent evaluation of the fatigue degradation mechanism. The first criterion is the fundamental frequency of the component or region being evaluated. If the fundamental frequency is higher than 200 Hz, the component is screened as being too rigid to experience significant turbulent buffeting vibration. Components with lower fundamental frequencies experience higher root mean square (RMS) vibration amplitudes, which translate into more limiting fatigue results. The second criterion is the relationship of components and supports that are exposed to similar flow conditions. By design, supports are thicker and less flexible than the components they support; therefore, the component is analyzed for turbulent buffeting vibrations. The results generally bound the performance of the support. For example, the steam generator (SG) tubes and the SG lower tube support cantilevers are exposed to similar primary

side flow conditions. However, the SG tubes are thinner and more flexible than the cantilevers. Additionally, the SG tubes are exposed to secondary side flow, which requires the consideration of the additional vibration forces due to secondary side flow conditions. Out of these two components, only the SG tubes are evaluated for turbulent buffeting vibrations, as the cantilevers experience smaller RMS vibration amplitudes.

Section 3.2.3 of TR-0716-50439 has been revised to provide the requested analytical details.

Impact on DCA:

Section 3.2.3 of TR-0716-50439 has been revised as described in the response above and as shown in the markup provided with this response.

where:

$G_P(f)$	=	PSD of the turbulent pressure as a function of modal frequency (psi^2/Hz) and
F	=	Reduced frequency (-).

The structural response due to the turbulence is calculated using the inputs that have been discussed. Equations to determine the root mean square (RMS) response are assigned based on the direction of the flow and the dimension of the structure. Using the RMS response, degradation mechanisms associated with impact and fatigue are evaluated. Components with less than one inch of separation are evaluated for impact. Components with fundamental frequencies less than 200 Hz and those whose response cannot be bounded by nearby components exposed to similar turbulent conditions~~that are thin or flexible~~ are evaluated for fatigue.

The acceptance criterion for a component remaining separated from an adjacent component is that the clearance is greater than 5σ RMS deflection. For components that do not meet the criterion, the surface stress is calculated and an impact fatigue assessment is performed. In addition to the impact fatigue, TB can cause fatigue due to vibration stresses. However, due to the very low vibration amplitudes and alternating stresses, the vibration stresses do not result in fatigue usage for any component susceptible to TB. Out of the components analyzed for TB, four components are shown to impact their adjacent supports and are discussed below.

Impact between the SG tubes and SG tube support is predicted to occur, and the fatigue usage due to vibration and impact is calculated to be {{ }}$^{2(a),(c),ECI}$ which provides a margin of safety of {{ }}$^{2(a),(c),ECI}$ This result demonstrates adequate SG tube performance for the component design life, subject to verification testing of analytical inputs and safety margin as identified in Table 3-10.

Impact between the ICIGT and the CRDS supports, between the CRDS and CRDS supports, and between the CRAGT and the guide tube support is predicted to occur. For all three impact pairs, the results show that the RMS vibrations do not result in fatigue usage due to the displacements themselves or due to impact. These results are due to the very low alternating stresses generated from the TB, which can be primarily attributed to the low-flow velocities.

Table 3-10 provides an overview of the analysis results and required testing. ~~Although analysis demonstrates 100 percent margin of safety for the CRAGT, separate effects testing is still planned to provide additional validation in the TB analysis. See Section 4.1.3 for additional testing details.~~

Response to Request for Additional Information
Docket No. 52-048

eRAI No.: 8884
Date of RAI Issue: 08/21/2017

NRC Question No.: 03.09.02-15

RG 1.20, Revision 3 states that a description of the vibration measurement and inspection phases of the comprehensive vibration assessment program should be submitted to the NRC. DCD Tier 2, Rev. 0, Section 3.9.2.4, COL Item 3.9-1 states that a COL applicant that references the NuScale Power Plant design certification will submit the results from the comprehensive vibration assessment program for the NuScale Power Module, in accordance with Regulatory Guide 1.20. Per RG 1.20, the details of the CVAP needs to be submitted by the COL applicant to the NRC prior to the preoperational testing or initial startup testing. The staff requests the applicant to revise this COL item to: “A COL applicant will provide the comprehensive vibration assessment program for the NuScale Power Module to the NRC including the test procedures prior to the start of initial startup testing and the testing results, in accordance with Regulatory Guide 1.20.”

NuScale Response:

NuScale agrees with the suggested change to the COL Item 3.9-1, to include the submittal of test procedures. While testing details that are pertinent to adequately validating the design analysis program via the measurement program are addressed in the CVAP measurement and inspection program technical report, testing procedures provide confirmation that the planned testing is performed in accordance with the technical report.

NuScale notes that not all measurement program validation testing is performed during the initial startup test phase; therefore, the suggested wording of the COL item revision in the RAI question has been modified. Specifically, it is required that the COL applicant submit the applicable testing procedure prior to performing a specific test.

Impact on DCA:

FSAR Tier 2 Section 3.9.2.4 COL Item 3.9-1 and FSAR Tier 2 Table 1.8-2 have been revised as described in the response above and as shown in the markup provided with this response.

RAI 02.04.13-1, RAI 03.04.02-1, RAI 03.04.02-2, RAI 03.04.02-3, RAI 03.05.01.04-1, RAI 03.05.02-2, RAI-03.06.02-15, RAI 03.07.01-2, RAI 03.07.01-3, RAI 03.07.02-8, RAI 03.07.02-12, RAI 03.09.02-15, RAI 03.09.06-6, RAI 03.09.06-27, RAI 03.11-8, RAI 03.11-14, RAI 09.01.05-3, RAI 09.01.05-6, RAI 10.02-1, RAI 10.02-2, RAI 10.04.10-2, RAI 13.01.01-1, RAI 13.01.01-1S1, RAI 13.02.02-1, RAI 13.03-4, RAI 13.05.02.01-2, RAI 13.05.02.01-2S1, RAI 13.05.02.01-3, RAI 13.05.02.01-3S1, RAI 13.05.02.01-4, RAI 13.05.02.01-4S1, RAI 20.01-4

Table 1.8-2: Combined License Information Items

Item No.	Description of COL Information Item	Section
COL Item 1.1-1:	A COL ~~Applicant~~applicant that references the NuScale Power Plant design certification will identify the site-specific plant location.	1.1
COL Item 1.1-2:	A COL ~~Applicant~~applicant that references the NuScale Power Plant design certification will provide the schedules for completion of construction and commercial operation of each power module.	1.1
COL Item 1.4-1:	A COL ~~Applicant~~applicant that references the NuScale Power Plant design certification will identify the prime agents or contractors for the construction and operation of the nuclear power plant.	1.4
COL Item 1.7-1:	A COL ~~Applicant~~applicant that references the NuScale Power Plant design certification will provide site-specific diagrams and legends, as applicable.	1.7
COL Item 1.7-2:	A COL ~~Applicant~~applicant that references the NuScale Power Plant design certification will list additional site-specific P&IDs and legends as applicable.	1.7
COL Item 1.8-1:	A COL ~~Applicant~~applicant that references the NuScale Power Plant design certification will provide a list of departures from the certified design.	1.8
COL Item 1.9-1:	A COL ~~Applicant~~applicant that references the NuScale Power Plant design certification will review and address the conformance with regulatory criteria in effect six months before the docket date of the COL application for the site-specific portions and operational aspects of the facility design.	1.9
COL Item 1.10-1:	A COL ~~Applicant~~applicant that references the NuScale Power Plant design certification will evaluate the potential hazards resulting from construction activities of the new NuScale facility to the safety-related and risk significant structures, systems, and components of existing operating unit(s) and newly constructed operating unit(s) at the co-located site per 10 CFR 52.79(a)(31). The evaluation will include identification of any management and administrative controls necessary to eliminate or mitigate the consequences of potential hazards and demonstration that the limiting conditions for operation of an operating unit would not be exceeded. This COL item is not applicable for construction activities (build-out of the facility) at an individual NuScale Power Plant with operating NuScale Power Modules.	1.10
COL Item 2.0-1:	A COL ~~Applicant~~applicant that references the NuScale Power Plant design certification will demonstrate that site-specific characteristics are bounded by the design parameters specified in Table 2.0-1. If site-specific values are not bounded by the values in Table 2.0-1, the COL applicant will demonstrate the acceptability of the site-specific values in the appropriate sections of its combined license application.	2.0
COL Item 2.1-1:	A COL ~~Applicant~~applicant that references the NuScale Power Plant design certification will describe the site geographic and demographic characteristics.	2.1
COL Item 2.2-1:	A COL ~~Applicant~~applicant that references the NuScale Power Plant design certification will describe nearby industrial, transportation, and military facilities. The COL applicant will demonstrate that the design is acceptable for each potential accident, or provide site-specific design alternatives.	2.2
COL Item 2.3-1:	A COL ~~Applicant~~applicant that references the NuScale Power Plant design certification will describe the site-specific meteorological characteristics for Section 2.3.1 through Section 2.3.5, as applicable.	2.3
COL Item 2.4-1:	A COL ~~Applicant~~applicant that references the NuScale Power Plant design certification will investigate and describe the site-specific hydrologic characteristics for Section 2.4.1 through Section 2.4.14, as applicable.	2.4
COL Item 2.5-1:	A COL ~~Applicant~~applicant that references the NuScale Power Plant design certification will describe the site-specific geology, seismology, and geotechnical characteristics for Section 2.5.1 through Section 2.5.5, below.	2.5

Table 1.8-2: Combined License Information Items (Continued)

Item No.	Description of COL Information Item	Section
COL Item 3.7-7:	A COL ~~Applicant~~applicant that references the NuScale Power Plant design certification will provide a seismic monitoring system and a seismic monitoring program that satisfies RG 1.12 "Nuclear Power Plant Instrumentation for Earthquakes," Rev. 2 (or later) and RG 1.166 "Pre-Earthquake Planning and Immediate Nuclear Power Plant Operator Post-earthquake Actions," Rev. 0 (or later). This information is to be provided as noted below.	3.7
COL Item 3.7-8:	A COL ~~Applicant~~applicant that references the NuScale Power Plant design certification will identify the implementation milestone for the seismic monitoring program.	3.7
COL Item 3.7-9:	A COL applicant that references the NuScale Power Plant design certification will include an analysis of performance-based response spectra (PBRS) established at the surface and intermediate depth(s) that take into account the complexities of the subsurface layer profiles of the site and provide a technical justification for the adequacy of V/H spectral ratios used in establishing the site-specific foundation input response spectra (FIRS) and PBRS for the vertical direction.	3.7
COL Item 3.7-10:	A COL applicant that references the NuScale Power Plant design certification will perform a site-specific configuration analysis that includes the RXB with applicable configuration layout of the desired NPMs. The COL applicant will confirm the following are bounded by the corresponding design certified seismic demands: 1) The ISRS of the standard design at the foundation and roof 2) The maximum forces in the NPM lug restraints and skirts 3) The maximum forces and moments in the east and west wing walls and pool walls If not, the standard design will be shown to have appropriate margin or should be appropriately modified to accommodate the site-specific demands.	3.7
COL Item 3.8-1:	A COL ~~Applicant~~applicant that references the NuScale Power Plant design certification will describe the site-specific program for monitoring and maintenance of the Seismic Category I structures in accordance with the requirements of 10 CFR 50.65 as discussed in RG 1.160. Monitoring is to include below grade walls, groundwater chemistry if needed, base settlements and differential displacements.	3.8
COL Item 3.8-2:	A COL ~~Applicant~~applicant that references the NuScale Power Plant design certification will confirm that the site independent RXB and CRB are acceptable for use at the designated site.	3.8
COL Item 3.9-1:	A COL ~~Applicant~~applicant that references the NuScale Power Plant design certification will provide the applicable test procedures prior to the start of testing and will submit the test and inspection results from the comprehensive vibration assessment program for the NuScale Power Module, in accordance with Regulatory Guide 1.20.	3.9
COL Item 3.9-2:	A COL ~~Applicant~~applicant that references the NuScale Power Plant design certification will develop design specifications and design reports in accordance with the requirements outlined under American Society of Mechanical Engineers Boiler and Pressure Vessel Code, Section III (Reference 3.9-1). A COL applicant will address any known issues through the reactor vessel internals reliability programs (i.e. Comprehensive Vibration Assessment Program, steam generator programs, etc.) in regards to known aging degradation mechanisms such as those addressed in Section 4.5.2.1.	3.9
COL Item 3.9-3:	A COL ~~Applicant~~applicant that references the NuScale Power Plant design certification will provide a summary of reactor core support structure maximum total stress, deformation, and cumulative usage factor values for each component and each operating condition in conformance with ASME Boiler and Pressure Vessel Code Section III Subsection NG.	3.9
COL Item 3.9-4:	A COL ~~Applicant~~applicant that references the NuScale Power Plant design certification will submit a Preservice Testing program for valves as required by 10 CFR 50.55a.	3.9
COL Item 3.9-5:	A COL ~~Applicant~~applicant that references the NuScale Power Plant design certification will establish an Inservice Testing program in accordance with ASME OM Code and 10 CFR 50.55a.	3.9

Guide (RG) 1.20. The CVAP ensures that the structural components of the NPM exposed to fluid flow are precluded from the detrimental effects of flow induced vibration (FIV). Given its prototype classification, the NuScale CVAP addresses the applicable criteria of RG 1.20, Section 2. The CVAP establishes the scope of analyses, testing, and inspections required to ensure that components of the NPM are not subject to unacceptable vibratory degradation.

A vibration test program for the NPM is conducted to validate the analysis program. The prototype testing consists of separate effects, factory, and initial startup tests. The testing results are used to validate the FIV analysis results and non-trivial analysis inputs, and to confirm that unacceptable vibratory response is precluded under steady state and transient operating conditions. The CVAP (Reference 3.9-5) is focused on confirming acceptable performance of the NPM components that are susceptible to FIV for all steady-state and transient operating conditions. This includes three main program components:

- analysis of the susceptible NPM components for applicable FIV mechanisms.
- pre-test predictions of the testing results, including experimental result ranges that account for uncertainties due to operating conditions, manufacturing tolerances, and instrument error. Pre-test predictions demonstrate the range of acceptable experimental results that can be used to validate analysis inputs and results.
- post-test analysis that verifies that the results fall within the pre-test predictions.

During FIV testing, NPM components are subjected to an operating time that results in cyclic loading of greater than one million cycles. This requirement is to address components that are affected by turbulent buffeting FIV mechanisms. To support the validation of analytical results related to this FIV mechanism, testing is performed until one million cycles of vibration are achieved for the most limiting (low structural natural frequency) NPM component. This is expected to take less than two days, depending on the operating conditions during the initial startup testing. The factory and initial startup testing performed to validate analysis results and non-trivial analysis inputs, and to confirm that unacceptable vibratory response is precluded, is documented in the NuScale CVAP (Reference 3.9-5).

Prior to and following initial startup testing, components are inspected for mechanical wear and signs of vibration induced damage. Initial startup testing provides a sufficient duration for the limiting NPM component to experience a minimum of one million cycles of vibration. All components that are evaluated in the analysis program undergo inspection. For the components validated in the measurement program via testing, the inspection provides a secondary confirmation of the FIV integrity of the NPM components. For components that do not require testing due to large safety margins, the inspection confirms that the testing performed on more limiting components sufficiently bounds the performance of the non-tested components.

Based on acceptable completion of the CVAP analysis, measurement and inspection program for the prototype NPM, subsequent NPMs are classified as non-prototype Category I.

RAI 03.09.02-15

COL Item 3.9-1: A COL applicant that references the NuScale Power Plant design certification will provide the applicable test procedures prior to the start of testing and will submit the test and inspection results from the comprehensive vibration assessment program for the NuScale Power Module, in accordance with Regulatory Guide 1.20.

3.9.2.5 Dynamic System Analysis of the Reactor Internals Under Service Level D Conditions

Appendix 3.A includes the dynamic system analysis of the reactor internals under service level D conditions.

Appendix 3.A provides details of the structural and dynamic analysis. The dynamic analysis for Level D service condition events considers safe shutdown earthquake (SSE) events and pipe rupture conditions. Section 3.9.3 defines the loads and loading combinations for components and the RVIs.

The dynamic model used for the blowdown analysis includes the CNV, the RPV, lower RVI, upper RVI, and the control rod drive mechanisms (CRDMs). See Appendix 3.A for a representative diagram of the model and additional information regarding the dynamic loading analysis of this model. Note that certain pipe breaks are not considered due to the application of leak-before-break methodology (see Section 3.6.3).

3.9.2.6 Correlations of Reactor Internals Vibration Tests with the Analytical Results

The results of analysis of the reactor vessel internals and other NPM components and supports are compared to the results of the prototype tests to verify the analytical models provide appropriate results. If the predicted responses differ significantly from the measured values during the testing, the calculated vibration responses are re-analyzed (including updates to models as needed) and reconciled with the measured vibration response.

3.9.3 ASME Code Class 1, 2, and 3 Components, Component Supports, and Core Support Structures

Pressure-retaining components, core support structures, and component supports that are safety-related are classified as Class A, B, or C (see subsection 3.2.2) and are constructed according to the rules of the ASME BPVC, Section III, (Reference 3.9-1), Division 1. As noted in subsection 3.2.2, Class A, B, and C mechanical components meet the requirements of ASME Code Classes 1, 2, and 3, respectively. This section discusses the structural integrity of pressure-retaining components, their supports, and core support structures which are designed in accordance with the rules of ASME BPVC, Section III (Reference 3.9-1), Division 1 and GDC 1, 2, 4, 14, and 15.

The NuScale Power Plant design complies with the relevant requirements of the following regulations including General Design Criteria of 10 CFR 50, Appendix A:

- GDC 1 and 10 CFR 50.55a, as they relate to structures and components being designed, fabricated, erected, constructed, tested, and inspected to quality standards commensurate with the importance of the safety-related function to be performed.

Response to Request for Additional Information
Docket No. 52-048

eRAI No.: 8884
Date of RAI Issue: 08/21/2017

NRC Question No.: 03.09.02-16

10 CFR 50, Appendix A, GDC 4 requires structures, systems, and components important to safety shall be designed to accommodate the effects of and to be compatible with the environmental conditions associated with normal operation, maintenance, testing, and postulated accidents. DCD Tier 2, Rev. 0, Section 3.9.2.3 states “Pre-operational testing is performed with the NPM components prior to fuel loading, at any time during module construction when the testing can be assured to accomplish the objectives of the measurement program.” Per RG 1.68, preoperational testing refers to test in the assembled plant prior to fuel load. If NuScale intends to perform factory tests instead of a preoperational test, the staff requests that the applicant use the proper terminology.

NuScale Response:

Factory testing is the correct terminology and the editorial error in FSAR Section 3.9.2.3 has been corrected to align with the TR-0716-50439 terminology. In addition to the instance identified in the RAI 8884 Question 03.09.02-16, two other sentences incorrectly use the term 'pre-operational' in FSAR Section 3.9.2.3 and have been corrected.

Figure 2-18 and Figure 2-22 of TR-0716-50439 Rev 0 have been updated per the response to RAI 8901 Question 03.09.05-8. Additionally, Figure 2-14 and Figure 2-16 of TR-0716-50439 Rev 0 have been revised to update the term 'CRDS' to 'CRD Shaft.'

Impact on DCA:

FSAR Tier 2 Section 3.9.2.3 and technical report TR-0716-50439 Rev 0 Figure 2-14, Figure 2-16, Figure 2-18 and Figure 2-22 have been revised as described in the response above and as shown in the markup provided with this response.

3.9.2.2.4 Basis for Selection of Frequencies

See Section 3.7.3.

3.9.2.2.5 Three Components of Earthquake Motion

See Section 3.7.2 and Section 3.12.

3.9.2.2.6 Combination of Modal Responses

See Section 3.7.2, Section 3.12 and Appendix 3.A.

3.9.2.2.7 Analytical Procedures for Piping

See Section 3.12.

3.9.2.2.8 Multiple-Supported Equipment Components with Distinct Inputs

See Sections 3.7.3 and Section 3.12.

3.9.2.2.9 Use of Constant Vertical Static Factors

See Section 3.7.3.

3.9.2.2.10 Torsional Effects of Eccentric Masses

See Sections 3.12 and 3.7.3.

3.9.2.2.11 Buried Seismic Category I Piping and Conduits

ASME Code Class 2 and Class 3 Seismic Category I buried piping in the NuScale Power Plant design is analyzed as discussed in Section 3.12.

3.9.2.2.12 Interaction of Other Piping with Seismic Category I Piping

See Section 3.12.

3.9.2.2.13 Analysis Procedure for Damping

See Section 3.7.3.

3.9.2.2.14 Test and Analysis Results

See Section 3.9.2.2.1 and Section 3.9.2.2.2 above.

3.9.2.3 Dynamic Response Analysis of Reactor Internals Under Operational Flow Transients and Steady-State Conditions

RAI 03.09.02-16

Flow-induced vibration (FIV) behaviors and characteristics are complex and require both analysis and testing to assess the vibrational responses. NuScale has developed a CVAP (Reference 3.9-5) in accordance with Regulatory Guide (RG) 1.20 to verify the structural integrity of the NPM components to FIV. The NuScale CVAP (Reference 3.9-5) documents the analytical evaluation of NPM components determined to be susceptible to FIV and identifies how the analytical results are verified by vibration measurement and inspection during ~~pre-operational~~separate effects, factory and initial startup testing.

The NuScale Power Module represents a first-of-a-kind design in its size, arrangement, and operating conditions, although its technology is based on well-proven light water reactor designs with long operational experience. Accordingly, the first operational NPM is classified as a prototype in accordance with RG 1.20. After the first NPM is qualified as a valid prototype, subsequent NPMs will be classified as non-prototype category I.

Evaluation of flow-induced vibration (FIV) for commercial SGs and pressurized water reactors (PWRs) has been well documented. As such, FIV mechanisms and the relevant structural and fluid characteristics that increase FIV risk are readily identified from open source references. NPM components are screened against the various FIV mechanisms, and analysis is performed to determine component susceptibility. The NPM components that were shown to be susceptible based on the screening criteria are discussed in the CVAP (Reference 3.9-5). Due to the first-of-a-kind NPM design, component screening analysis errs on the side of including potentially susceptible components, even when they could be excluded based on engineering judgment or precedent. This minimizes the risk of failing to analyze a significant component. Compared to the existing PWR and BWR designs, the natural circulation design of the NPM is inherently less susceptible to FIV due to the lower primary coolant velocities. Based on these two factors, FIV analysis results demonstrate that many components have very large margins of safety.

RAI 03.09.02-16

To validate the FIV inputs, analytical results, and the margins of safety determined in the analysis program, a combination of separate effects, ~~pre-operational~~factory and initial startup testing are performed. Separate effects testing is performed on a fully-prototypic portion of the design. ~~Pre-operational~~Factory testing is ~~performed with the NPM components prior to fuel loading,~~conducted at a manufacturer or vendor facility at any time during module construction when the testing can be assured to accomplish the objectives of the measurement program. Initial startup testing is performed under full power normal operating conditions, after fuel loading. The results of all three testing types are used to validate the prototype NPM design. The CVAP (Reference 3.9-5) demonstrates that the NPM components for the NuScale Power Plant integrated pressurized water reactor are not expected to be subject to unacceptable flow-induced vibrations.

3.9.2.4 Flow-Induced Vibration Testing of Reactor Internals Before Unit Operation

A Comprehensive Vibration Assessment Program (CVAP) (Reference 3.9-5) for the NuScale Power Module (NPM) is established in accordance with the NRC Regulatory

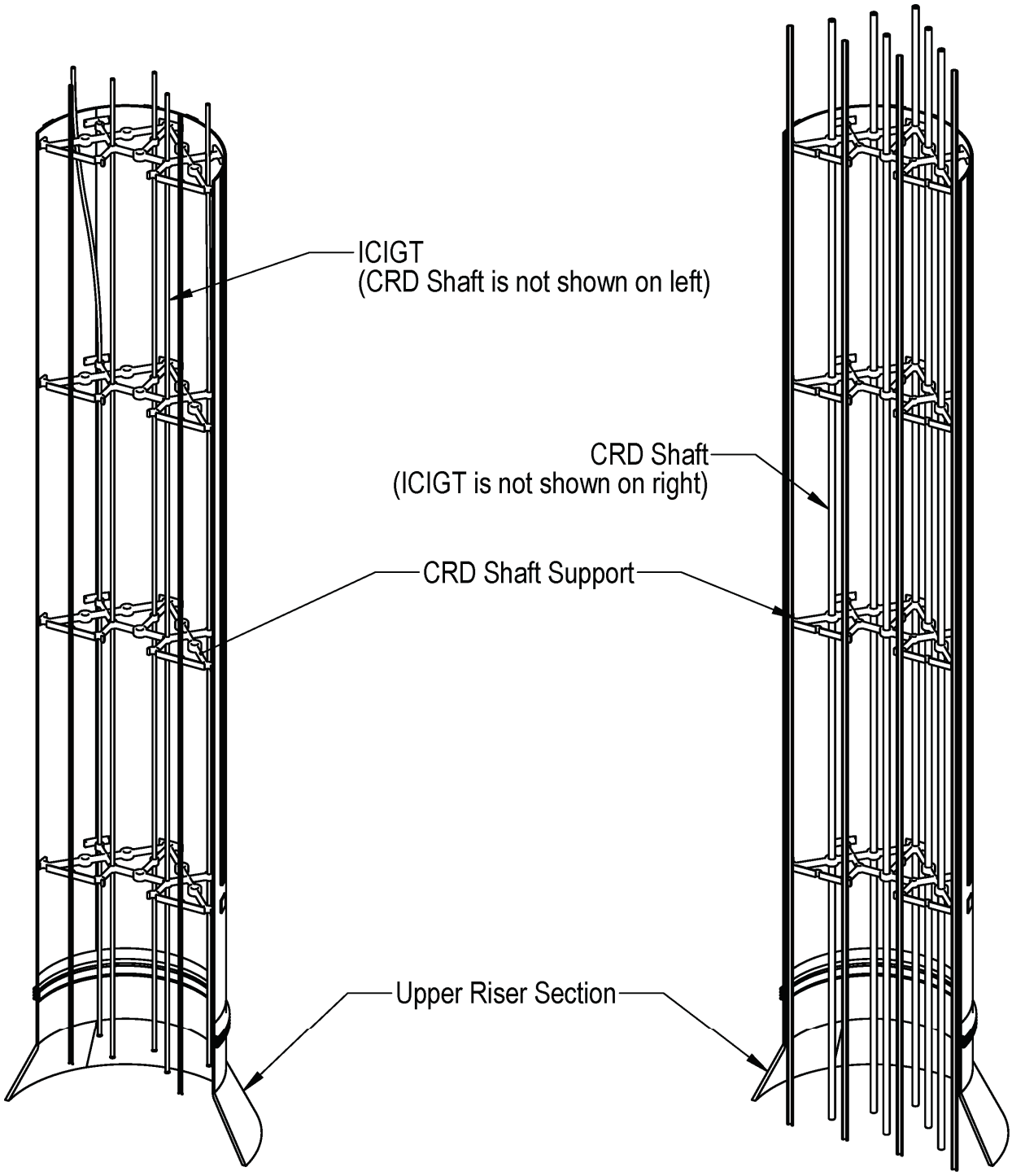

Figure 2-15 Control rod drive shaft, in-core instrument guide tube, and supports

susceptible to TB due to parallel flow and vortices generated by the feed plenums. The open cylindrical shape precludes the lower riser section from being susceptible to FEI, AR, leakage flow, gallop, or flutter. The lower riser section is not susceptible to VS because no part of the component is opposing the flow path. Therefore, the lower riser section is only susceptible to TB.

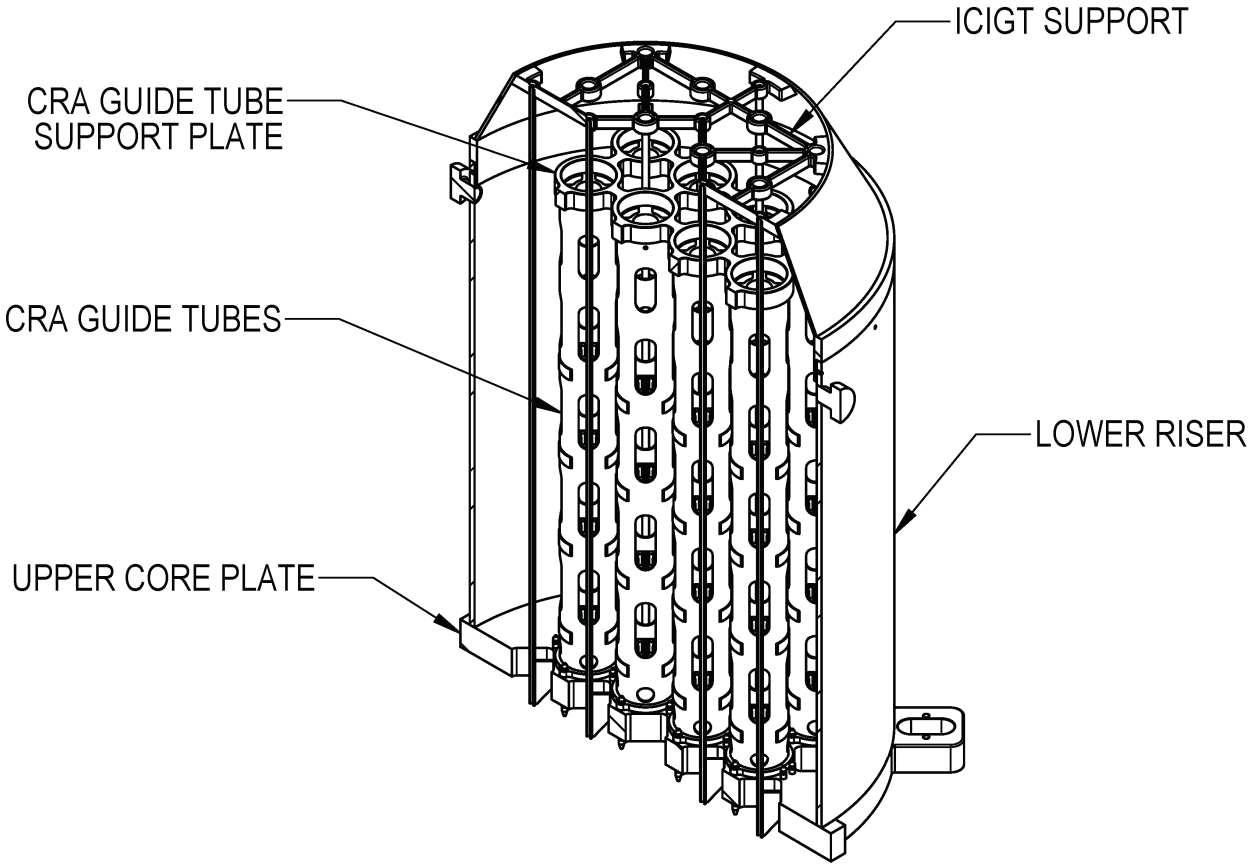

Figure 2-17 Lower riser assembly

2.3.4.2 Control Rod Assembly Guide Tube Assembly

The CRAGT supports the CRAs at varying amounts of control rod insertion, as shown in Figure 2-18. The CRAGT assembly includes four CRA cards, the CRA lower flange, the CRA guide tube, and the CRA alignment cone. The CRA cards, lower flange, and alignment cone are welded to the CRAGT guide tube to form the CRAGT assembly. The CRAGT assemblies are supported by the upper core plate and the guide tube support plate (Section 2.3.4.3).

The CRAGT components have many sharp edges to cause VS and TB. The CRAGT assembly is not susceptible to leakage flow because there is not an annular flow path with a flexible boundary. Using the screening criteria, the CRAGT is not susceptible to the FIV phenomena, other than VS and TB.

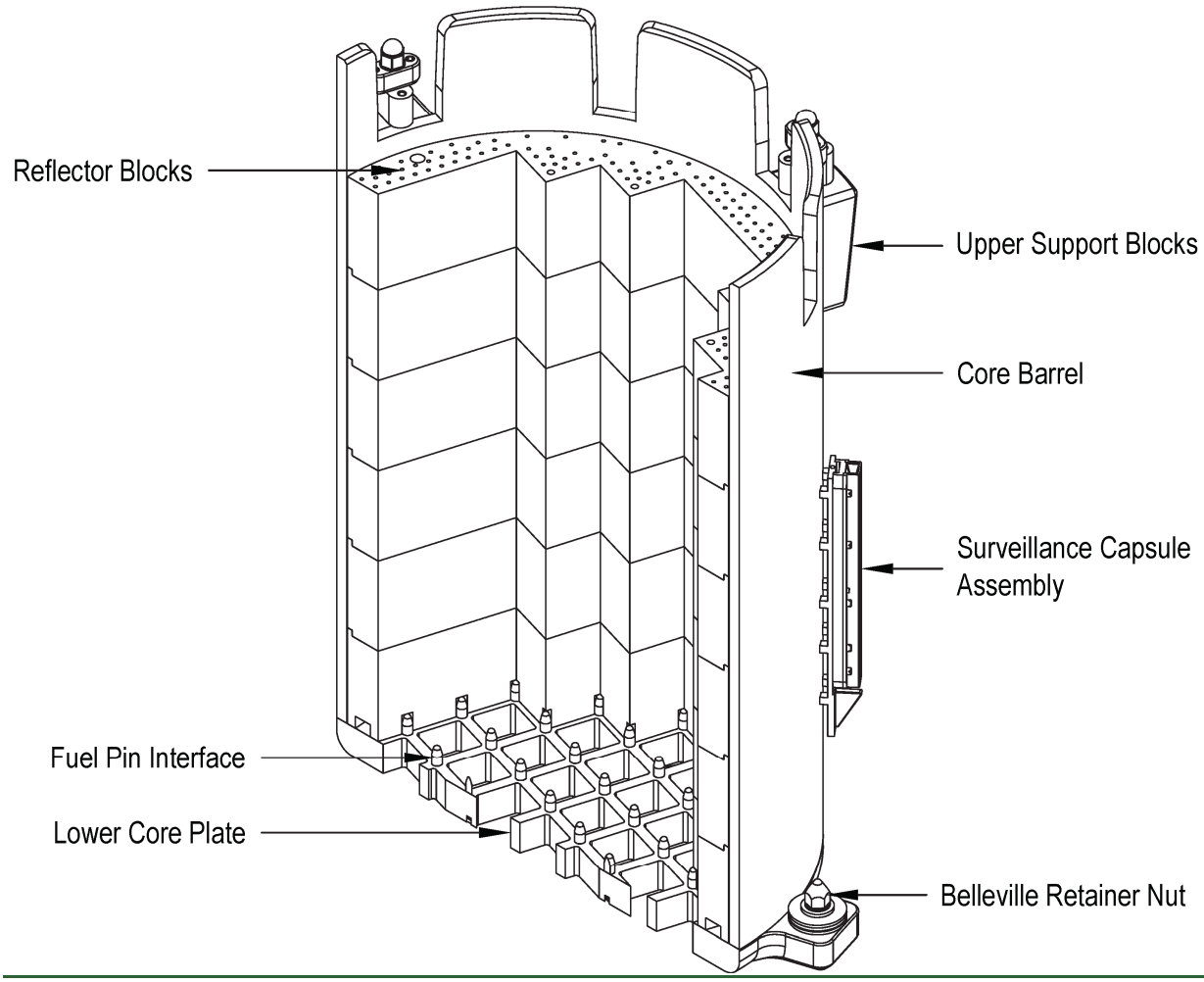

Figure 2-19 Core support assembly

2.3.5.1 Core Barrel

The core barrel is a large cylinder designed to carry the core support loads and separate the down-flowing fluid from the fuel, as denoted in Figure 2-19. The core barrel is susceptible to TB using the screening criteria. Using the screening criteria, the core barrel is not susceptible to the other FIV phenomena.

2.3.5.2 Upper Support Block

The upper support block is attached to the core barrel and opposes the fluid as it travels through the downcomer, as shown in Figure 2-19. This block is susceptible to VS and TB phenomena. Using the screening criteria, the upper support block is not susceptible to the other FIV phenomena.

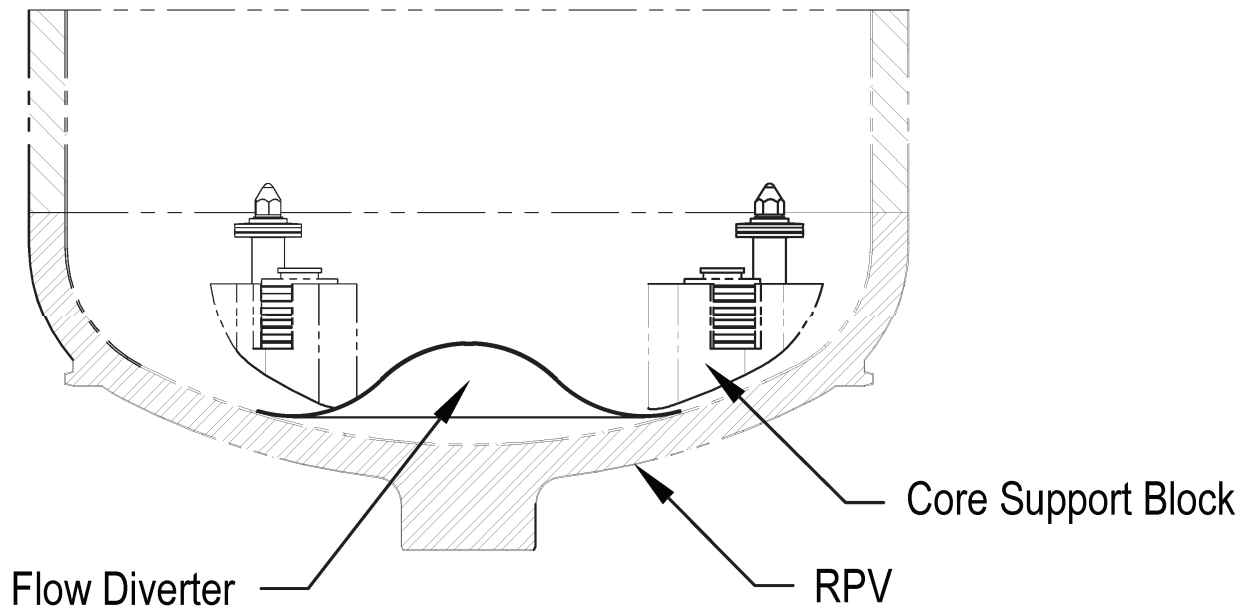

Figure 2-23 Flow diverter

2.3.6.4 Thermowells

Within the primary coolant flow path, RCS temperature instruments are installed in thermowells located at the entrance to the SG tubes and in the downcomer. Thermowells are welded to the RPV. Thermowells are also used to measure temperature in secondary side piping. In locations where they are used, thermowells extend into the flow path and are exposed to turbulent cross-flow conditions. Therefore, they are susceptible to VS and TB. Other FIV mechanisms are not applicable to these components.

2.3.6.5 Component and Instrument Ports

Acoustic resonances due to the generation of shear waves at closed branch lines are evaluated. Penetrations that create a hollow cavity and that are located in regions with flow are susceptible to AR. Due to the integral design of the NPM, the RPV contains very few penetrations along the primary coolant flow path. For the NPM design, the only components that meet this criterion are the primary coolant flow sensors and RRVs, which are both located in the downcomer. Due to the flow conditions and geometry in these regions, no FIV mechanisms other than AR are credible for component and instrument ports.

2.4 Regulatory Requirements

Consistent with RG 1.20, Section 2, the prototype CVAP for the NPM is composed of three sub-programs. The program includes

Response to Request for Additional Information
Docket No. 52-048

eRAI No.: 8884
Date of RAI Issue: 08/21/2017

NRC Question No.: 03.09.02-17

10 CFR 50, Appendix A, GDC 2 requires systems, structures, and components important to safety be designed to withstand appropriate combinations of the effects of normal and accident conditions with the effects of natural phenomena including earthquake. DCD Tier 2, Section 5.4.1 and TR-0716-50439-P, Rev, 0, "NuScale Comprehensive Vibration Assessment Program Technical Report" provide figures of the steam generator tubes and tube supports. The NRC staff needs additional information to understand the details of the tube support design. Therefore, the staff requests the applicant to provide sketches showing details of the steam generator tube supports including components such as tube support bracket, support backing strip. Provide a discussion of the clearance between components and identify these clearances on the sketches. Update the DCD or CVAP technical report to include the requested information.

NuScale Response:

FSAR Figure 5.4-6 has been updated to include a detailed view of a steam generator tube support. The figure includes labels for the tube support plates, the top support bracket, the bottom support bracket, and the backing strips.

A new figure has been added to Section 2.3.2.1 of the CVAP technical report (TR-0716-50439). The figure shows a section view of a tube support to depict how the tube support tabs and backing strips interface with the tubes. The areas where clearances are provided between the steam generator tubes, backing strips, and the support plate tabs are also shown. The discussion added to TR-0716-50439 describes the locations and functions of the clearances in the tube support assembly including the tube to tube support tab clearance, the top support bracket to upper tube support bar clearance, the bottom support bracket to lower tube support clearance, and the middle tube support plate tab to backing strip clearance. The remainder of the tube support assembly contains welded connections. The tube to tube support clearances are provided for manufacture of the tube supports and for ease of assembly of the steam generator. The bracket to tube support bar clearances are provided so that the brackets can fit over the support bars during steam generator assembly. The bottom support bracket has a

---

clearance to the lower tube support cantilever to allow for thermal expansion of the steam generator assembly. The middle of the three columns of tabs on the tube support plate extends between the backing strips on the adjacent support bar assembly. This clearance allows adjacent support bar assemblies to support each other in the circumferential direction.

Impact on DCA:

FSAR Tier 2 Figure 5.4-6 and technical report TR-0716-50439 Section 2.3.2.1 have been revised as described in the response above and as shown in the markup provided with this response.

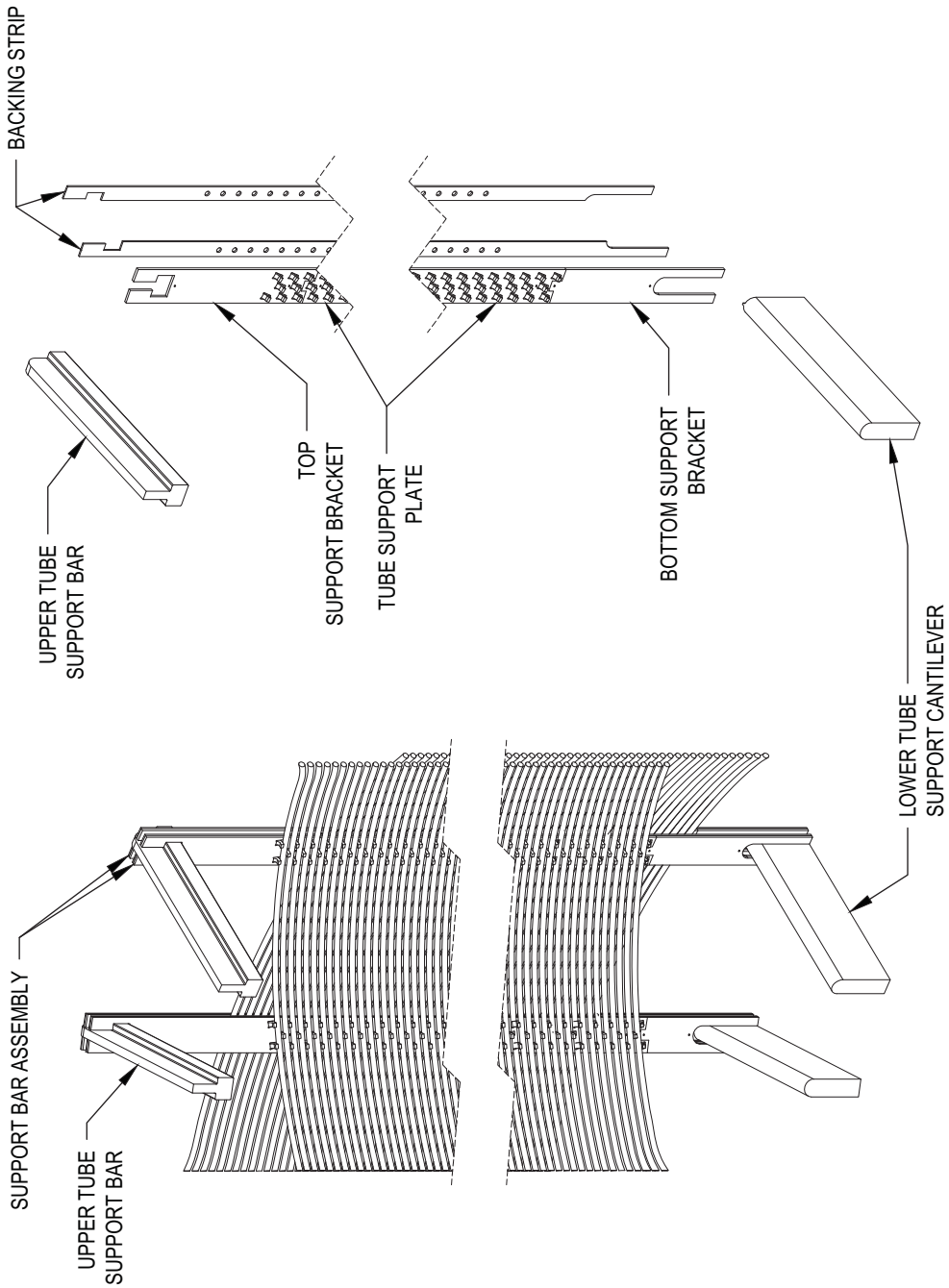

Figure 5.4-6: Steam Generator Tube Support Bars and Cantilevers

RAI 03.09.02-17

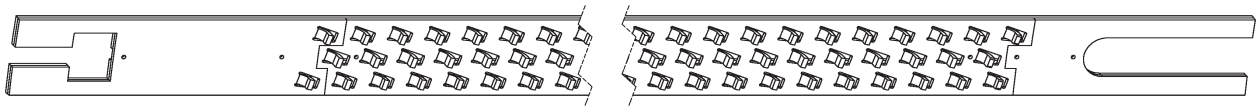

Figure 2-10 Steam generator tube support bar assembly (shown in a horizontal installation)

Figure 2-11 shows the SG tube supports interface with the SG tubes. Clearances are provided between the tube and tube support plate tabs and between the tube and backing strip. Other clearances in the tube support assembly include the top support bracket to upper tube support bar clearance, the bottom support bracket to lower tube support clearance, and the middle support tab to backing strip clearance. The remainder of the tube support assembly contains welded connections. The tube to tube support plate tab clearances are provided for manufacturability of the tube supports and for ease of assembly of the steam generator as a whole. The bracket to tube support bar clearances are provided so that the brackets fit over the support bars during steam generator assembly. The bottom support bracket has a clearance to the lower tube support cantilever to allow for thermal expansion of the steam generator assembly. The middle of the three columns of tabs on the tube support plate extends between the backing strips on the adjacent support bar assembly. This clearance allows adjacent support bar assemblies to support each other in the circumferential direction.

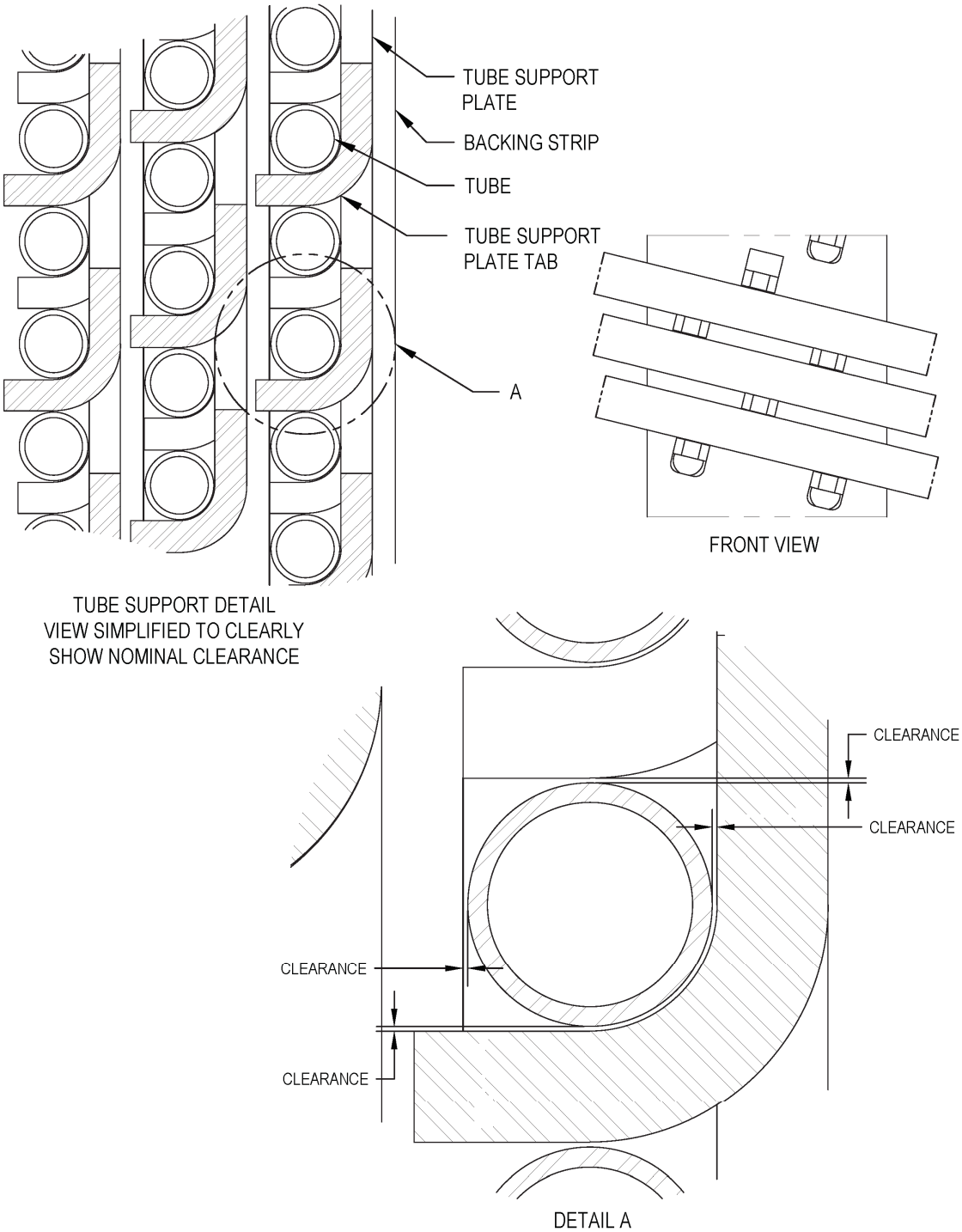

Figure 2-11 Steam generator tube to tube support interface

Enclosure 3:

Affidavit of Zackary W. Rad, AF-1017-56705

NuScale Power, LLC

AFFIDAVIT of Zackary W. Rad

I, Zackary W. Rad, state as follows:

1. I am the Director, Regulatory Affairs of NuScale Power, LLC (NuScale), and as such, I have been specifically delegated the function of reviewing the information described in this Affidavit that NuScale seeks to have withheld from public disclosure, and am authorized to apply for its withholding on behalf of NuScale.
2. I am knowledgeable of the criteria and procedures used by NuScale in designating information as a trade secret, privileged, or as confidential commercial or financial information. This request to withhold information from public disclosure is driven by one or more of the following:
   a. The information requested to be withheld reveals distinguishing aspects of a process (or component, structure, tool, method, etc.) whose use by NuScale competitors, without a license from NuScale, would constitute a competitive economic disadvantage to NuScale.
   b. The information requested to be withheld consists of supporting data, including test data, relative to a process (or component, structure, tool, method, etc.), and the application of the data secures a competitive economic advantage, as described more fully in paragraph 3 of this Affidavit.
   c. Use by a competitor of the information requested to be withheld would reduce the competitor's expenditure of resources, or improve its competitive position, in the design, manufacture, shipment, installation, assurance of quality, or licensing of a similar product.
   d. The information requested to be withheld reveals cost or price information, production capabilities, budget levels, or commercial strategies of NuScale.
   e. The information requested to be withheld consists of patentable ideas.
3. Public disclosure of the information sought to be withheld is likely to cause substantial harm to NuScale's competitive position and foreclose or reduce the availability of profit-making opportunities. The accompanying Request for Additional Information response reveals distinguishing aspects about the method by which NuScale develops its comprehensive vibration assessment program technical report.

   NuScale has performed significant research and evaluation to develop a basis for this method and has invested significant resources, including the expenditure of a considerable sum of money.

   The precise financial value of the information is difficult to quantify, but it is a key element of the design basis for a NuScale plant and, therefore, has substantial value to NuScale.

   If the information were disclosed to the public, NuScale's competitors would have access to the information without purchasing the right to use it or having been required to undertake a similar expenditure of resources. Such disclosure would constitute a misappropriation of NuScale's intellectual property, and would deprive NuScale of the opportunity to exercise its competitive advantage to seek an adequate return on its investment.

4. The information sought to be withheld is in the enclosed response to NRC Request for Additional Information No. 194, eRAI No. 8884. The enclosure contains the designation "Proprietary" at the top of each page containing proprietary information. The information considered by NuScale to be proprietary is identified within double braces, "{{ }}" in the document.
5. The basis for proposing that the information be withheld is that NuScale treats the information as a trade secret, privileged, or as confidential commercial or financial information. NuScale relies upon the exemption from disclosure set forth in the Freedom of Information Act ("FOIA"), 5 USC § 552(b)(4), as well as exemptions applicable to the NRC under 10 CFR §§ 2.390(a)(4) and 9.17(a)(4).
6. Pursuant to the provisions set forth in 10 CFR § 2.390(b)(4), the following is provided for consideration by the Commission in determining whether the information sought to be withheld from public disclosure should be withheld:
   a. The information sought to be withheld is owned and has been held in confidence by NuScale.
   b. The information is of a sort customarily held in confidence by NuScale and, to the best of my knowledge and belief, consistently has been held in confidence by NuScale. The procedure for approval of external release of such information typically requires review by the staff manager, project manager, chief technology officer or other equivalent authority, or the manager of the cognizant marketing function (or his delegate), for technical content, competitive effect, and determination of the accuracy of the proprietary designation. Disclosures outside NuScale are limited to regulatory bodies, customers and potential customers and their agents, suppliers, licensees, and others with a legitimate need for the information, and then only in accordance with appropriate regulatory provisions or contractual agreements to maintain confidentiality.
   c. The information is being transmitted to and received by the NRC in confidence.
   d. No public disclosure of the information has been made, and it is not available in public sources. All disclosures to third parties, including any required transmittals to NRC, have been made, or must be made, pursuant to regulatory provisions or contractual agreements that provide for maintenance of the information in confidence.
   e. Public disclosure of the information is likely to cause substantial harm to the competitive position of NuScale, taking into account the value of the information to NuScale, the amount of effort and money expended by NuScale in developing the information, and the difficulty others would have in acquiring or duplicating the information. The information sought to be withheld is part of NuScale's technology that provides NuScale with a competitive advantage over other firms in the industry. NuScale has invested significant human and financial capital in developing this technology and NuScale believes it would be difficult for others to duplicate the technology without access to the information sought to be withheld.

I declare under penalty of perjury that the foregoing is true and correct. Executed on 10/18/2017.

Zackary W. Rad