ACCELERATED DISTRIBUTION DEMONSTRATION SYSTEM

REGULATORY INFORMATION DISTRIBUTION SYSTEM (RIDS)

ACCESSION NBR:9003080203 DOC.DATE: 90/02/27 NOTARIZED: YES DOCKET #
FACIL:50-397 WPPSS Nuclear Project, Unit 2, Washington Public Powe 05000397
AUTH.NAME AUTHOR AFFILIATION
SORENSEN,G.C. Washington Public Power Supply System
RECIP.NAME RECIPIENT AFFILIATION
Document Control Branch (Document Control Desk)
See Reports

SUBJECT: Application for amend to License NPF-21,allowing use of Cycle 6 reload fuel in plant.

DISTRIBUTION CODE: A001D COPIES RECEIVED:LTR 1 ENCL 1 SIZE: 15 + 302
TITLE: OR Submittal: General Distribution

NOTES:

	RECIPIENT ID CODE/NAME	COPIES LTTR	COPIES ENCL	RECIPIENT ID CODE/NAME	COPIES LTTR	COPIES ENCL
	PD5 LA	1	1	PD5 PD	1	1
	SAMWORTH,R	5	5			
INTERNAL:	ACRS	6	6	NRR/DET/ECMB 9H	1	1
	NRR/DOEA/OTSB11	1	1	NRR/DST 8E2	1	1
	NRR/DST/SELB 8D	1	1	NRR/DST/SICB 7E	1	1
	NRR/DST/SRXB 8E	1	1	NUDOCS-ABSTRACT	1	1
	OC/LFMB	1	0	OGC/HDS2	1	0
	REG FILE 01	1	1	RES/DSIR/EIB	1	1
EXTERNAL:	LPDR	1	1 NP	NRC PDR	1	1 NP
	NSIC	1	1 NP			

NRR Chatterton 1 1

R I D S / A D D S

NOTE TO ALL "RIDS" RECIPIENTS:

PLEASE HELP US TO REDUCE WASTE! CONTACT THE DOCUMENT CONTROL DESK, ROOM P1-37 (EXT. 20079) TO ELIMINATE YOUR NAME FROM DISTRIBUTION LISTS FOR DOCUMENTS YOU DON'T NEED!

TOTAL NUMBER OF COPIES REQUIRED: LTTR ~~27~~ 28 ENCL ~~25~~ 26

AA/7

WASHINGTON PUBLIC POWER SUPPLY SYSTEM

P.O. Box 968 • 3000 George Washington Way • Richland, Washington 99352

February 27, 1990
G02-90-032

Docket No. 50-397

U.S. Nuclear Regulatory Commission
Attn: Document Control Desk
Washington, D.C. 20555

Gentlemen:

Subject: NUCLEAR PLANT NO. 2, OPERATING LICENSE NPF-21
REQUEST FOR AMENDMENT TO TECHNICAL SPECIFICATIONS
RELOAD LICENSE AMENDMENT (CYCLE 6)

In accordance with the Code of Federal Regulations, Title 10, Parts 50.90 and 2.101, the Supply System hereby requests an amendment to the WNP-2 Technical Specifications. This amendment is being submitted to allow the use of Cycle 6 reload fuel in WNP-2. Changes to the following Technical Specifications are being requested.

Index

1.0	Definitions
2.0	Safety Limits and Limiting Safety System Settings: Introduction
3/4.2.1	Average Planar Linear Heat Generation Rate
3/4.2.3	Minimum Critical Power Ratio
3/4.2.4	Linear Heat Generation Rate
B3/4.2.1	Average Planar Linear Heat Generation Rate
B3/4.2.3	Minimum Critical Power Ratio
5.3	Reactor Core

Add: NRR Chatterton Ltr 1 Encl 1

A001
1/1 Change: NRC POR 1 NP
LPOR 1 NP
NSIC 1 NP

This Submittal Can Be Copied
Per Larry Aeschliman (WPPS)
3/5/90

The attachments to this letter are the Supply System Reload Summary Report, marked up Technical Specifications and the cycle specific documents generated by the fuel vendors. These attached documents are listed below. As a part of the marked up Technical Specifications and in keeping with past Supply System practice, a brief summary justification of the Technical Specification change requests is attached for clarification and information. Taken together, they provide the basis for the proposed no significant hazards determination.

I. Technical Specification Changes

II. WNP-2 Cycle 6 Reload Summary Report (WPPSS-EANF-126)

III. WNP-2 Cycle 6 Reload Analysis (ANF-90-02)

IV. WNP-2 Cycle 6 Plant Transient Analysis (ANF-90-01)

V. GE11 Lead Fuel Assembly Report for Washington Public Power Supply System's Nuclear Project No. 2 Reload 5, Cycle 6

VI. "Supplemental Lead Fuel Assembly Licensing Report - SVEA 96 LFA's for WNP-2", (UK90-126)

Included in the WNP-2 Cycle 6 reload are four General Electric (GE) LFA's and four ABB Atom (ABB) LFA's. These LFA's have been designed to be compatible with the reload assemblies that will constitute the remainder of the reload batch for Cycle 6 (Fresh Assemblies). The Supply System intends to load the LFA's in core locations which have been analyzed to have sufficient margin such that the LFA's are not expected to be the limiting assemblies in the core on either a nodal or an assembly power basis. This approach is to prevent the possibility of the LFA's from ever being the limiting fuel assemblies.

The eight (8) LFA's discussed above are described in Attachments V (GE) and VI (ABB Atom). Please note that the information contained in these reports is of the type which the vendors maintain in confidence and withhold from public disclosure. It has been handled and classified as proprietary as indicated in the enclosed affidavits. The Supply System hereby requests that this information be withheld from public disclosure in accordance with the provisions of 10CFR 2.790.

The WNP-2 Cycle 6 core design includes fifty-six initial core GE fuel assemblies previously discharged from WNP-2, which are re-inserted into the WNP-2 core in edge locations with this design. Thirty-two of these assemblies were discharged from WNP-2 after Cycle 1, and twenty-four were discharged after Cycle 2. All fifty-six have been visually inspected and found to be acceptable for reuse based on the inspection.

The Supply System has reviewed the use of the Cycle 6 reload design in WNP-2 and concludes that it does not involve an unreviewed safety question. The Supply System has also evaluated this request per 10CFR 50.92 and determined that it does not:

1. Involve a significant increase in the probability or consequences of an accident previously evaluated. A multidiscipline analysis has been performed on the proposed Cycle 6 reload design to examine the probability or the consequences of an accident or safety related equipment malfunction and the analysis demonstrates no significant change in previously evaluated accidents.

   The mechanical, thermal hydraulic, and neutronic characteristics of the reload bundles (including the LFA's) have been analyzed and in all cases the evaluation of those changes shows that the design complies with established criteria, as approved by the NRC. The results of those analyses are consistent with previous results, and have not resulted in significant reduction in margin of safety (see 3 below).

2. Create the possibility of a new or different kind of accident from any accident previously evaluated. The reload fuel has been analyzed in detail and has been found to be sufficiently similar to the previous reload fuel whose analyses have been reported in the FSAR to preclude the possibility that an accident or malfunction of a different type than that previously analyzed is credible (Attachments III, IV, V and VI). These analyses provide assurance that the proposed fuel loading design does not effect previous analyses bases.

3. Create a significant reduction in the margin of safety. The Cycle 6 reload design is the subject of several wide-ranging analyses, the intent of all of which was to examine the applicability of the existing WNP-2 Technical Specifications to the WNP-2 core. These analyses confirmed some of the existing operating limits and recommended changes in others, thereby setting thermal limits for WNP-2 specific to the Cycle 6 core. With operation guided by this set of thermal limits, there is no reduction in safety margin for operation of WNP-2.

As discussed above, the Supply System considers that this change does not involve a significant hazard consideration, nor is there a potential for significant change in the types or significant increase in the amount of any effluents that may be released offsite, nor does it involve a significant increase in individual or cumulative occupational radiation exposure. Accordingly, the proposed change meets the eligibility criteria for categorical exclusion set forth in 10CFR 51.22(c)(9) and therefore, per 10CFR 51.22(b), an environmental assessment of the change is not required.

This Technical Specification change has been reviewed and approved by the WNP-2 Plant Operation Committee (POC) and the Supply System Corporate Nuclear Safety Review Board (CNSRB).

WNP-2 is scheduled to begin the spring outage on April 13, 1990. The plant is currently scheduled to resume operation on or about May 25, 1990. Approval of this Technical Specification amendment is required prior to plant restart.

Very truly yours,

G. C. Sorensen, Manager
Regulatory Programs

WCW/bk
Attachments

cc: JB Martin - NRC RV
NS Reynolds - BCP&R
RB Samworth - NRC
DL Williams - BPA/399
NRC Site Inspector - 901A
C Eschels - EFSEC

STATE OF WASHINGTON) Subject: Reload TS submittal

COUNTY OF BENTON)

I, G. C. Sorensen, being duly sworn, subscribe to and say that I am the Manager, Regulatory Programs, for the WASHINGTON PUBLIC POWER SUPPLY SYSTEM, the applicant herein; that I have full authority to execute this oath; that I have reviewed the foregoing; and that to the best of my knowledge, information, and belief the statements made in it are true.

Attached to this submittal are copies of the following reports which are considered by their respective owners to contain proprietary information:

1) Supplemental Lead Fuel Assembly Licensing Report SVEA-96 LFAs to WNP-2 - Summary, ABB Atom Report UK 90-126, January 1990

2) GE11 Lead Fuel Assembly Report for Washington Public Power Supply System Nuclear Project No. 2 Reload 5 Cycle 6, December 28, 1989

Also attached are affidavits executed by Johann Lindner, Vice President ABB Atom, Inc. and Janice S. Charnley, Manager, Fuel Licensing, General Electric Co., dated February 16, 1990, and January 8, 1990, respectively, which provide the basis on which it is claimed that the subject reports should be withheld from public disclosure under the provisions of 10 CFR 2.790.

The Washington Public Power Supply System treats the subject reports as proprietary information on the basis of statements of the owners. In submitting this information to the NRC in support of the "WNP-2 Request for Amendment to Technical Specifications Reload License Amendment (CYCLE 6)," the Supply System requests that the subject reports be withheld from public disclosure in accordance with 10CFR 2.790.

DATE 26 FEB, 1990

G. C. Sorensen, Manager
Regulatory Programs

On this day personally appeared before me G. C. Sorensen, to me known to be the individual who executed the foregoing instrument, and acknowledged that he signed the same as his free act and deed for the uses and purposes herein mentioned.

GIVEN under my hand and seal this 26 day of February 1990.

Bernice Kasko
Notary Public in and for the
STATE OF WASHINGTON

Residing at Kennewick, Wa
My commission expires 8/1/90

ABB-90-057

AFFIDAVIT

COMMONWEALTH OF PENNSYLVANIA:

ss

COUNTY OF ALLEGHENY:

Before me, the undersigned authority, personally appeared Johann Lindner, who, being by me duly sworn according to law, deposes and says that he is authorized to execute this Affidavit on behalf of ASEA Brown Boveri Atom (ABB Atom) and that the averments of fact set forth in this Affidavit are true and correct to the best of his knowledge, information, and belief:

Johann Lindner
Vice President, ABB Atom Inc.

Sworn to and subscribed
before me this 16th day
of February, 1990.

Jean Gailey
Notary Public

NOTARIAL SEAL
JEAN GAILEY, NOTARY PUBLIC
MONROEVILLE BORO, ALLEGHENY COUNTY
MY COMMISSION EXPIRES JUNE 25, 1990

Member, Pennsylvania Association of Notaries

(1) I am Vice President, U. S. Fuel Operations, ASEA Brown Boveri (ABB) Atom Inc., in the ABB Atom Fuel Division of ABB and as such, I have been specifically delegated the function of reviewing the proprietary information sought to be withheld from public disclosure in connection with nuclear power plant licensing and rulemaking proceedings, and am authorized to apply for its withholding on behalf of ABB Atom.

(2) I am making this Affidavit in conformance with the provisions of 10CFR Section 2.790 of the Commission's regulations and in conjunction with the ABB Atom application for withholding accompanying this Affidavit.

(3) I have personal knowledge of the criteria and procedures utilized by ABB Atom in designating information as a trade secret, privileged or as confidential commercial or financial information.

(4) Pursuant to the provisions of paragraph (b)(4) of Section 2.790 of the Commission's regulations, the following is furnished for consideration by the Commission in determining whether the information sought to be withheld from public disclosure should be withheld.

(i) The information sought to be withheld from public disclosure is owned and has been held in confidence by ABB Atom.

(ii) The information is of a type customarily held in confidence by ABB Atom and not customarily disclosed to the public. ABB Atom has a rational basis for determining the types of information customarily held in confidence by it and, in that connection, utilizes a system to determine when and whether to hold certain types of information in confidence. The application of that system and the substance of that system constitutes ABB Atom policy and provides the rational basis required.

Under that system, information is held in confidence if it falls in one or more of several types, the release of which might result in the loss of an existing or potential competitive advantage, as follows:

(a) The information reveals the distinguishing aspects of a process (or component, structure, tool, method, etc.) where prevention of its use by any of ABB Atom's competitors without license from ABB Atom constitutes a competitive economic advantage over other companies.

(b) It consists of supporting data, including test data, relative to a process (or component, structure, tool, method, etc.), the application of which data secures a competitive economic advantage; e.g., by optimization or improved marketability.

(c) Its use by a competitor would reduce his expenditure of resources or improve his competitive position in the design, manufacture, shipment, installation, assurance of quality, or licensing a similar product.

(d) It reveals cost or price information, production capacities, budget levels, or commercial strategies of ABB Atom, its customers or suppliers.

(e) It reveals aspects of past, present, or future ABB Atom or customer funded development plans and programs of potential commercial value to ABB Atom.

(f) It contains patentable ideas, for which patent protection may be desirable.

(g) It is not the property of ABB Atom, but must be treated as proprietary by ABB Atom according to agreements with the owner.

There are sound policy reasons behind the ABB Atom system which include the following:

(a) The use of such information by ABB Atom gives ABB Atom a competitive advantage over its competitors. It is, therefore, withheld from disclosure to protect the ABB Atom competitive position.

(b) It is information which is marketable in many ways. The extent to which such information is available to competitors diminishes the ABB Atom ability to sell products and services involving the use of the information.

(c) Use by our competitor would put ABB Atom at a competitive disadvantage by reducing his expenditure of resources at our expense.

(d) Each component of proprietary information pertinent to a particular competitive advantage is potentially as valuable as the total competitive advantage. If competitors acquire components of proprietary information, any one component may be the key to the entire puzzle, thereby depriving ABB Atom of a competitive advantage.

(e) The ABB Atom capacity to invest corporate assets in research and development depends upon the success in obtaining and maintaining a competitive advantage.

(iii) The information is being transmitted to the Commission in confidence and, under the provisions of 10CFR Section 2.790, it is to be received in confidence by the Commission.

(iv) The information sought to be protected is not available in public sources or available information has not been previously employed in the same original manner or method to the best of our knowledge and belief.

(v) The proprietary information sought to be withheld in this submittal is the "Supplemental Lead Fuel Assembly Licensing Report. SVEA-96 LFAs to WNP-2 Summary", ABB Atom Report UK 90-126, dated January 1990 (proprietary). This document is being transmitted by the Washington Public Power Supply System in support of the WNP-2 Cycle 6 Reload Summary Report. The ABB Atom Report UK 90-126 contains information describing the mechanical, nuclear, and thermal hydraulic properties and performance characteristics of the SVEA-96 fuel assemblies not customarily disclosed to the public based on criteria described in paragraph 4(ii) in this Affidavit.

Public disclosure of this proprietary information is likely to cause substantial harm to the competitive position of ABB Atom because it would enhance the ability of competitors to determine the performance characteristics of the SVEA-96 assemblies without commensurate expenses.

The development of the technology described by the information is the result of applying the results of many years of experience in an intensive ABB Atom effort and the expenditure of a considerable sum of money for this effort.

Further the deponent sayeth not.

AFFIDAVIT
for

GE11 Lead Fuel Assembly Report

for

Washington Public Power Supply System

Nuclear Project No. 2 Reload 5 Cycle 6

(dated December 28, 1989)

General Electric Company

AFFIDAVIT

I, Janice S. Charnley, being duly sworn, depose and state as follows:

1. I am Manager, Fuel Licensing, General Electric Company, and have been delegated the function of reviewing the information described in paragraph 2 which is sought to be withheld and have been authorized to apply for its withholding.

2. The information sought to be withheld is the attached *GE11 Lead Fuel Assembly Report for Washington Public Power Supply System Nuclear Project No. 2 Reload 5 Cycle 6*, dated December 28, 1989.

3. In designating material as proprietary, General Electric utilizes the definition of proprietary information and trade secrets set forth in the American Law Institute's Restatement of Torts, Section 757. This definition provides:

   > "A trade secret may consist of any formula, pattern, device or compilation of information which is used in one's business and which gives him an opportunity to obtain an advantage over competitors who do not know or use it.... A substantial element of secrecy must exist, so that, except by the use of improper means, there would be difficulty in acquiring information.... Some factors to be considered in determining whether given information is one's trade secret are: (1) the extent to which the information is known outside of his business; (2) the extent to which it is known by employees and others involved in his business; (3) the extent of measures taken by him to guard the secrecy of the information; (4) the value of the information to him and to his competitors; (5) the amount of effort or money expended by him in developing the information; (6) the ease or difficulty with which the information could be properly acquired or duplicated by others."

4. Some examples of categories of information which fit into the definition of proprietary information are:

   a. Information that disclosed a process, method or apparatus where prevention of its use by General Electric's competitors without license from General Electric constitutes a competitive economic advantage over other companies;

   b. Information consisting of supporting data and analyses, including test data, relative to a process, method or apparatus, the application of which provide a competitive economic advantage, e.g., by optimization or improved marketability;

   c. Information which, if used by a competitor, would reduce his expenditure of resources or improve his competitive position in the design, manufacture, shipment, installation, assurance of quality or licensing of a similar product;

   d. Information which reveals cost or price information, production capacities, budget levels or commercial strategies of General Electric, its customers or suppliers;

e. Information which reveals aspects of past, present or future General Electric customer-funded development plans and programs of potential commercial value to General Electric;

f. Information which discloses patentable subject matter for which it may be desirable to obtain patent protection;

g. Information which General Electric must treat as proprietary according to agreements with other parties.

5. Initial approval of proprietary treatment of a document is typically made by the Subsection manager of the originating component, who is most likely to be acquainted with the value and sensitivity of the information in relation to industry knowledge. Access to such documents within the Company is limited on a "need to know" basis and such documents are clearly identified as proprietary.

6. The procedure for approval of external release of such a document typically requires review by the Subsection Manager, Project manager, Principal Scientist or other equivalent authority, by the Subsection Manager of the cognizant Marketing function (or delegate) and by the Legal Operation for technical content, competitive effect and determination of the accuracy of the proprietary designation in accordance with the standards enumerated above. Disclosures outside General Electric are generally limited to regulatory bodies, customers and potential customers and their agents, suppliers and licensees and then only with appropriate protection by applicable regulatory provisions or proprietary agreements.

7. The document mentioned in paragraph 2 above has been evaluated in accordance with the above criteria and procedures and has been found to contain information which is proprietary and which is customarily held in confidence by General Electric.

8. The document mentioned in paragraph 2 above is classified as proprietary because it contains details concerning current General Electric fuel designs which were developed at considerable expense to General Electric which are not available to other parties.

9. The information to the best of my knowledge and belief has consistently been held in confidence by the General Electric Company, no public disclosure has been made, and it is not available in public sources. All disclosures to third parties have been made pursuant to regulatory provisions or proprietary agreements which provide for maintenance of the information in confidence.

10. Public disclosure of the information sought to be withheld is likely to cause substantial harm to the competitive position of the General Electric Company and deprive or reduce the availability of profit making opportunities because it would provide other parties, including competitors, with valuable information regarding current General Electric fuel designs which were obtained at considerable cost to the General Electric Company. The manpower, computer and manufacturing resources expended by General Electric to develop the current fuel designs are valued at approximately $8 million. In addition, the development of individual bundle and lattice designs required over 120 man-hours and approximately $20,000 in computer resources.

STATE OF CALIFORNIA)
COUNTY OF SANTA CLARA) ss:

Janice S. Charnley, being duly sworn, deposes and says:

That she has read the foregoing affidavit and the matters stated therein are true and correct to the best of her knowledge, information, and belief.

Executed at San Jose, California, this 8th day of January 1990.

Janice S. Charnley
General Electric Company

Subscribed and sworn before me this 8th day of January 1990.

OFFICIAL SEAL
MARY L KENDALL
Notary Public-California
SANTA CLARA COUNTY
My Comm. Exp. Mar. 26, 1993

Mary L. Kendall
Notary Public - California
Santa Clara County

ABB Atom **Report**

Ref. UK 90-126			
Distribution: The Supply System	From: BX	Date: 1/90	Reg.: WPPSS	Page: 1 (29)
	Author: Nils O Jonsson, 2631;		Issued by: William Harris, 2660 WR Harris
	Examined by: /1/		Approved by: /2/

Title

Supplemental Lead Fuel Assembly Licensing Report - SVEA-96 LFAs to WNP-2 - Summary

Abstract

This report summarizes the results of the mechanical, nuclear, thermal-hydraulic, and safety analyses that have been performed to evaluate the impact on the core performance and to justify operating limits that will not decrease the WNP-2 reactor's margin to safety during operation with four SVEA-96 Lead Fuel Assemblies.

It is concluded that the introduction of SVEA-96 Lead Fuel Assemblies does not constitute an unreviewed safety question provided that the specified operational recommendations are adhered to. The results reported in the Reload Safety Evaluation for the reload will not have to be changed due to the introduction of SVEA-96 Lead Fuel Assemblies. Furthermore, the safe operation of the SVEA-96 assemblies themselves is assured.

/1/ RPA Stig Andersson, RPB Hjalmar Wijkström, UR Sverre Haukeland, UK Gunnar Vesterlund

/2/ BU Örjan Bernander

Copies: BX(4), BU, UR, URA, URC, UK, UKB Massih, UKC, RP, RPA, RPB, MA Thunberg

ABB ASEA BROWN BOVERI

Contents

1. INTRODUCTION

Four SVEA-96 Lead Fuel Assemblies (LFA's) will be inserted into the WNP-2 reactor. This report summarizes the mechanical, nuclear, thermal-hydraulic, and safety analyses that have been performed to evaluate the impact on the core performance and to justify operating limits that will not decrease the reactor's margin to safety during operation with the SVEA-96 assemblies installed in the core.

The SVEA-96 LFA's have been made compatible with the ANF-4 assemblies assumed to occupy the positions of the LFA's in the reload safety evaluation. The analyses show that mechanical, nuclear, and thermal-hydraulic compatibility has been achieved.

The analysis results show that the loading of the SVEA-96 LFA's will not invalidate the conclusions in the reload safety evaluation for other fuel assemblies. They also show that safe operation of the SVEA-96 LFA's is assured. It is therefore concluded that the loading of the SVEA-96 LFA's will not:

- involve a significant increase in the probability or consequences of an accident previously evaluated, or
- create the possibility of a new or different kind of accident from any accident previously evaluated, or
- involve a significant reduction in a margin of safety.

The mechanical design analyses for the fuel assembly as well as the fuel rods are summarized in Chapter 2.

Chapter 3 contains a summary of the nuclear design analyses comparing the nuclear characteristics of the SVEA-96 and ANF-4 assemblies.

The thermal-hydraulic design analyses are summarized in Chapter 4. Hydraulic compatibility is demonstrated and the critical power performance of the SVEA-96 fuel is compared to that of the ANF-4 assembly.

Chapter 5 includes the results of the safety evaluation. Insertion of four SVEA-96 LFA's will have neglible effect on the response of the core to core wide transients and primary system behavior following a postulated loss of coolant accident. Results of calculations for the SVEA-96 assemblies are provided, and operating limits for

SVEA-96 are given based on these results. The localized transient event due to a control rod withdrawal error has been analyzed and the results show that this event is not limiting for the SVEA-96 LFA's. Furthermore, the effect on other fuel assemblies by the introduction of the SVEA-96 LFA's is neglible. The introduction of four SVEA-96 LFA's will have no significant effect on the consequences of a control rod drop accident. The core wide stability performance will not be affected. The channel flow stability of the SVEA-96 assemblies is shown to be better than that of the 8x8 assemblies already in the core.

It is concluded in Chapter 6 that the only required change to the Technical Specifications is to include SVEA-96 specific values of the Operating Limit Minimum Critical Power Ratio. Introduction of four SVEA-96 LFA's will not affect limiting safety system settings nor surveillance requirements.

This report is a summary of Reference (1).

2. FUEL MECHANICAL DESIGN ANALYSES

The SVEA-96 fuel assembly can be thought of as consisting of:

- a fuel bundle
- a fuel channel
- a handle with spring.

The fuel bundle consists of 96 fuel rods arranged in four 5x5-1 subbundles. The channel has a cruciform internal structure with a square center canal that forms gaps for non-boiling water during operation. The subbundles are inserted into the channel from the top and are supported in the bottom end by a stainless steel bottom support and a transition piece which are bolted to the channel. The subbundles are freestanding inside the channel. There is sufficient space for subbundle growth at the top of the assembly to eliminate any burnup limitation due to differential growth between fuel bundles and the fuel channel.

Figure 1 shows the design of the assembly.

The LFA's have been found to be geometrically compatible with existing 8x8 fuel in the core as well as with control rods, detectors, other core components, pool storage positions, and handling equipment. This evaluation has accounted for irradiation growth and extreme conditions with fresh SVEA-96 assemblies close to maximally burnt 8x8 assemblies as well as highly burnt SVEA-96 assemblies close to fresh 8x8 assemblies.

The differential growth between the channel and subbundles has been evaluated and it has been found that subbundle growth due to irradiation will not be restricted.

The differential growth of the fuel rods has been evaluated and will not be restricted in a manner which would cause large axial loads which could lead to rod bow.

The SVEA-96 design also contains a number of additional design features to minimize fuel rod bow. Extensive operating experience with the SVEA-96 and the similar SVEA-100 design has confirmed the absence of rod bow leading to degraded performance.

Operating experience, as well as results from fretting and vibration tests, provide assurance that there will be no detrimental fretting of the fuel rods or other components during operation.

Stresses and strains due to internal overpressure and handling loads have been evaluated and found to be acceptable for the fuel channel assembly. Tests, as well as analyses confirm that there is satisfactory margin against fatigue failure for at least 2,000 cycles of 100% to 60% to 100 % load following power cycles. Channel creep deformation has been evaluated and is small due to the support provided by the watercross. Channel dimensional stability (bow, channel growth, and residual stress relaxation) will be satisfactory for the design life of the LFA's based on reactor operating experience and tests. Maximum expected corrosion and hydriding is well within allowable limits for the LFA design lifetime based on operating experience.

Stresses in other components such as the handle with spring, the top and bottom tie plates, the tie rods and nuts, the spacer capture rod, and the spacers, during handling and operation have been found to be acceptable based on operating experience and analyses.

Tests have confirmed that the fuel channel and spacers can withstand forces during a postulated seismic event corresponding to an acceleration of at least 4 g. Analyses of a combined seismic event and loss of coolant accident have confirmed that the SVEA-96 assemblies will not be shifted in a manner which prevent control rod insertion or lead to a noncoolable geometry and that allowable stresses in the assembly components will not be exceeded. The dynamic properties of the SVEA-96 fuel assembly are slightly different from those of the initial core 8x8 fuel, mainly due to the difference in channel wall thickness. The fundamental frequency is 19 % lower for SVEA-96. For a limited number of SVEA fuel assemblies in the core this difference is sufficiently small and the hydraulic coupling between the channels sufficiently strong, so that the dynamic response of the initial core is applicable for both the initial core fuel and SVEA fuel.

Calculations and analyses have confirmed that the fuel rod design satisfies the design criteria. Calculations and analyses have been performed at Beginning of Life (BOL) and End of Life (EOL).

At BOL operation at both the maximum linear heat generation rate (11.6 kW/ft) and at zero power have been investigated for maximum cladding thermal stresses, maximum fuel pellet thermal expansion, and maximum cladding stresses caused by maximum pressure difference across the cladding wall. The conclusions from these analyses can be summarized as follows:

- No pellet cladding mechanical interaction is observed at BOL, and the total circumferential strain at BOL does not exceed the 1% limit;

- Maximum pellet temperature remains below the melting point of the fuel at all times in the assembly life;

- Cladding stresses have been calculated according to the German Standard KTA 3103 and do not exceed the limit values for any time during the assembly life;

- The safety factors for elastic and plastic instabilities of the cladding have been calculated. The values obtained are greater than or equal to the minimum allowed safety factors;

- The minimum calculated plenum spring force exceeds the maximum design handling and shipping spring load of 2 g acceleration.

Worst case SVEA-96 rod power histories for UO_2 fuel and for gadolinia fuel representative of reload fuel operation have been used to determine fuel temperatures, internal rod gas pressures, and cladding strains as a function of burnup. The power histories assume a maximum LHGR of 9.14 kW/ft and a peak pellet burnup of over 60,000 MWd/MtU. In addition, the evaluation was performed for two power histories representative of the SVEA-96 LFA operation for comparison. In-pile waterside corrosion data on LK-II (beta-quenched) tubes has been utilized for the evaluation of the LFA's. A design curve based on these data has been used to predict the maximum cladding outer oxide layer thickness for the target resident life of the fuel rod. Cladding hydrogen pickup data have been utilized for the LFA hydriding evaluation. Cladding fatigue caused by flow induced vibrations, and cladding ovality as a function of residence time for worst case operating condition have also been evaluated.

The results of these analyses can be summarized as follows:

- The EOL pressure calculations satisfy the lift-off criterion. The internal rod pressure was always less than 186 psia which is well under the system pressure of 1020 psia;

- The effective cladding permanent strain remained well below the limiting value of 2.5%;

- Calculated maximum fuel temperature was always below the melting temperature during the lifetime of the fuel;

- Analysis of ABB Atom's data base on cladding corrosion has shown that the average oxide thickness on the surface of the cladding remains below 4 mils;

- Analysis of ABB Atom's data base on cladding hydriding shows that the total hydrogen concentration in the fuel rod cladding is below the design limit of 500 ppm;

- The maximum calculated shear stress in the cladding due to flow induced vibration is well under the limiting value of ±7,250 psi;

- Cladding collapse calculations show that the collapse time exceeds the residence time of the fuel rods in the core.

All results support the conclusion that ABB Atom design criteria are met. In addition, they demonstrate that the criteria and methodology satisfactorily address all the relevant factors for the design of the fuel rod for peak pellet burnups of 57,000 MWd/MtU for UO_2 rods and 61,000 MWd/MtU for rods containing gadolinia.

3. NUCLEAR DESIGN ANALYSES

The nuclear design of the SVEA-96 LFA's was performed for the following general guidelines:

1 The average enrichment of the SVEA-96 assemblies was selected to provide approximately the same discharge burnup as the ANF-4 assemblies;

2 The burnable absorber content of the SVEA-96 assemblies was selected to assure that the SVEA-96 reactivity (k_∞) is acceptably close to that of the ANF-4 assemblies at a representative core average void fraction of 40 %;

3 The fuel pin enrichment distributions were selected to optimize the CPR performance. The SVEA-96 critical power performance is based on full scale critical power measurements..

The enrichment and gadolinia distributions are shown in Figure 2 (BWR-1124). The average bundle enrichment is 2.51 w/o including the 6 inch natural uranium blankets in the top and bottom of the fuel rods.

Reactivities (k_∞) as a function of burnup at operating temperature of the SVEA-96 and ANF-4 assemblies are compared in Figure 3. The reactivity difference is between 300 and 800 pcm at 40 % void fraction between Beginning of Life (BOL) and 6,000 MWd/MtU when most of the gadolinia is depleted. The ANF-4 assembly is more reactive than the SVEA-96 assembly at zero void fraction, while the SVEA-96 assembly is more reactive than the ANF-4 assembly at 70 % void fraction.

The fuel temperature reactivity coefficients for the SVEA-96 and ANF-4 assemblies are the same to within 0.05 pcm/°F. The void coefficient for SVEA-96 is 15-55 pcm/% void less negative than that for the ANF-4 assembly. The larger difference occurs at high void fractions and high burnup.

Three-dimensional calculations have shown that the relative bundle power will be between 5.4 % (Beginning of Cycle) and 5.7 % (End of Cycle) higher in the SVEA-96 assembly than in an ANF-4 assembly occupying the same location. Furthermore, the axial power distribution in the SVEA-96 assembly tends to be more skewed to the

upper part of the assembly than the ANF-4 assembly axial power distribution. These effects are due to the more efficient moderation of the fast neutrons originating in the surrounding 8x8 fuel assemblies in the SVEA-96 assembly, particularly in the upper part of the SVEA-96 assembly and have been accounted for in thermal-hydraulic and safety analyses.

The SVEA-96 LFA locations will be assumed to be occupied by ANF-4 assemblies in the input to the Plant Process Computer (PPC). Therefore, the SVEA-96 LFA's will be operating a a higher power than those edited by the PPC for the LFA locations due to the difference in bundle power explained above and different detector responses for SVEA-96 and ANF-4 assemblies. Three dimensional calculations including modelling of the PPC power normalization methodology have shown that the SVEA-96 assembly power may be underpredicted by 5.7 % (BOC) to 5.8 % (EOC) in the PPC output. The maximum power in an axial segment of the SVEA-96 fuel assembly may be underpredicted by up to 4 % in the PPC output. The power edited by the PPC for other fuel assemblies close to the SVEA-96 LFA's may be underpredicted by up to 0.6 %. These effects of assuming that ANF-4 assemblies occupy the LFA locations in the PPC input have been explicitly accounted for in the thermal-hydraulic and safety analyses.

4. THERMAL-HYDRAULIC DESIGN ANALYSIS

The flow paths for the ANF-4 and SVEA-96 assemblies in the WNP-2 core are shown in Figure 4. As shown in Figure 4, the coolant flow enters the SVEA-96 bottom nozzle through the fuel support piece. A support plate, which provides axial support for the subbundles, is located in the upper section of the bottom nozzle configuration. Coolant can exit the bottom nozzle through the bypass flow hole (flow path 4 in Figure 4), by entering the central watercross section (flow path 2 in Figure 4), or by entering one of the four subbundles (flow path 1 in Figure 4). The lower tie plate of the SVEA-96 assembly constitutes an individual inlet orifice for each of the four sub-bundles.This orifice in conjunction with the pressure equalization flow paths between the four subchannels tends to provide hydrodynamic stability of the four parallel subchannels.

The SVEA-96 channel is rigidly attached to the bottom nozzle with a bolt in each face. This feature eliminates the leakage flow path between the bottom nozzle through the finger spring configuration which is present in the ANF-4 bundle design.

The SVEA-96 design utilizes six spacers in each subbundle rather than the seven spacers incorporated in the ANF-4 bundle design. The SVEA-96 spacers are fabricated with inconel rather than zircaloy which allows the use of relatively thin strip material. Therefore, the pressure drop across each of the six SVEA-96 spacers is lower than that across each of the seven ANF-4 spacers, leading to a substantially lower pressure drop due to spacers for the SVEA-96 design compared to the ANF-4 design.

The use of 96 fuel rods in the SVEA-96 design compared with 62 fuel rods in the ANF-4 design leads to an increase in heated surface area of about 21%. This feature leads to a substantial improvement in steady-state CPR performance relative to the ANF-4 assembly.

4.1 Hydraulic Compatibility

The total pressure drop across a BWR fuel assembly is the sum of friction, acceleration, elevation, spacer and tie-plate pressure drops.

For a given assembly flow, the friction pressure drop component will be somewhat greater for the SVEA-96 assembly than for the ANF-4 assembly due to the increased

surface area in the SVEA-96 assembly.

For a given total assembly flow, the fraction of flow to the active fuel region will be slightly less for the SVEA-96 assembly than for the ANF-4 assembly since a larger fraction of the flow goes through the SVEA watercross than the ANF-4 water rods. Therefore, the SVEA-96 exit quality will be slightly greater for the SVEA-96 assembly at a given assembly power and flow. Consequently, the acceleration pressure drop will be slightly greater and the elevation pressure drop slightly lower for the SVEA-96 assembly than for the ANF-4 assembly under the same conditions.

Since the SVEA-96 assembly has fewer spacers than the ANF-4 assembly, and each spacer offers less resistance to flow than the ANF-4 assembly spacers, the total pressure drop due to spacer losses is lower for the SVEA-96 assembly than for the ANF-4 assembly.

The pressure drop component across the upper tie plate is relatively low for both assemblies. The SVEA-96 loss coefficient is about half of that for the ANF-4 assembly.

The SVEA-96 assemblies are designed such that the total flow through the assembly is sufficiently similar to that of the ANF-4 assembly under the same conditions to avoid any substantial adverse impact on thermal performance. This is done by sizing the SVEA-96 lower tie plate (LTP) flow holes to match the ANF-4 bundle flow at reference conditions. For the SVEA-96 LFA's a standard lower tie plate is used. This has a slightly larger pressure drop than would strictly be required for an exact match of the assembly flows. As a result, the flow rate to the SVEA-96 LFA's is reduced slightly relative to an ANF-4 assembly for the same reference conditions. All analyses have considered this and it has been demonstrated that it is acceptable.

The entrance to the central section of the watercross is orificed to control watercross flow. The watercross flow is taken from the plenum upstream (below) of the lower tie plate. Flow holes are provided in the waterwing walls just downstream (above) of the lower tie plate to allow coolant to enter the waterwings. The inlet orifices to the watercross and the water wings are sized to provide sufficient flow to avoid significant boiling in these water channels at rated conditions. At 100 % power and flow conditions the watercross flow is 5.4 %.

As shown in Figure 4, the coolant can enter the interassembly bypass region from the lower plenum prior to entering the assembly bottom nozzle directly through the lower core plate or it can pass through the inlet orifice and leak to the bypass between the bottom nozzle and the fuel support piece. After the coolant enters the bottom nozzle, it

can enter the interassembly bypass region only through the bypass flow holes in the SVEA-96 assembly. The ANF-4 assembly contains an additional flow path between the bottom nozzle and the channel through the finger spring configuration.

Two SVEA-96 bypass flow holes are contained in the conical section of the bottom nozzle. The holes are sized to provide the same total bypass flow at reference conditions as the ANF-4 assembly. Since there is no leakage between the SVEA-96 channel and bottom nozzle, the flow through the SVEA-96 bypass flow holes corresponds to the sum of the flows through the ANF-4 bypass flow holes and finger springs.

Full core thermal-hydraulic calculations at different power and flow conditions as well as at different burnup levels (accounting for crud buildup) confirm that the design of the bypass holes and the inlets to the water cross fulfill the design requirements.

4.2 Critical Power Performance

The Plant Process Computer (PPC) output for the SVEA-96 LFA's Critical Power Ratio (CPR) will be determined by a correlation appropriate for the ANF-4 assemblies. The relation between the Critical Power performance of the SVEA-96 and ANF-4 assemblies was therefore established to define the appropriate interpretation of MCPR values edited by the PPC to assure that the SVEA-96 LFA's are operated at acceptable MCPR values.

The critical power performance of the SVEA-96 LFA's has been evaluated by using the XL-S96 correlation (Reference (2)) based on full scale tests for SVEA-96 in the FRIGG loop. The critical power performance of the ANF-4 assembly to which the SVEA-96 LFA's are matched has been determined by the GEXL correlation with minor corrections to assure that the critical power of the assembly is not underestimated. The critical power for the SVEA-96 assembly is more than 11 % higher than for the ANF-4 assembly at zero burnup. At higher burnups this difference decreases and is about 4.3 % at 21,000 MWd/MtU.

The power generation in the SVEA-96 LFA's is underpredicted by the PPC as described in Chapter 3. The relation between the PPC output CPR and the actual CPR for the SVEA-96 LFA's is affected by this as well as the critical power performance difference between the assemblies. The analyses show that the PPC output CPR is at least between 4.5 % (BOC) and slightly more than 1 % (higher burnups) lower than the actual CPR for the SVEA-96 assemblies. Assuming that the CPR edited by the PPC for the LFA locations represents the actual CPR for the LFA's is, therefore,

conservative since this assumption will provide an underestimate of the actual CPR for the LFA's.

The operating conditions for the LFA's shall be limited such that the fuel can be operated for its specified lifetime with an acceptably low probability of failure due to boiling transition. Specifically, the fuel shall be operated in a manner which assures that CPR limits are not exceeded. The CPR design basis is that at least 99.9% of the fuel rods in the core will not be expected to experience boiling transition during normal operation or anticipated operational transients. The Safety Limit Minimum Critical Power Ratio (SLMCPR) is the lowest Minimum Critical Power Ratio (MCPR) for the core such that 99.9 % of the fuel rods will be expected to avoid boiling transition. The SLMCPR is determined by using bounding radial bundle power and local power distributions, uncertainties in the parameters used in the evaluation of the critical power correlation, the uncertainty in the fit of the correlation to the experimental data, and the uncertainty in the parameters affecting the determination of core power. A SLMCPR has been determined for a full core of SVEA-96 assemblies using SVEA-96 specific values for the local power distribution, uncertainties in the parameters used in the evaluation of the critical power correlation, and the uncertainty in the fit of the correlation to the experimental data. The resulting calculated SLMCPR for a full core of SVEA-96 assemblies was found to be 1.05. It is concluded, therefore, that the present cycle 6 SLMCPR of 1.06 would be conservative for a full core of SVEA-96 assemblies and will continue to be valid with the four SVEA-96 LFA's installed in cycle 6 of WNP-2.

5. SAFETY ANALYSES

Safety analyses have been performed to address the nuclear safety, limiting core wide transient events, the control rod withdrawal error event, the loss of coolant accident, the control rod drop accident, and the stability characteristics of the SVEA-96 assemblies. The impact of misloading or misorienting the LFA's has also been addressed.

5.1 Nuclear Safety

The influence on the cold shutdown margin of installing the four SVEA-96 LFA's has been evaluated. Based on three dimensional core calculations comparing the shutdown margin with the SVEA-96 LFA's installed to the situation in which the LFA locations are occupied by ANF-4 assemblies, it is concluded that the shut down margin at the most limiting time in the cycle (BOC) is changed insignificantly (approximately 30 pcm) when the SVEA-96 assemblies are inserted instead of four ANF-4 assemblies.

The insertion of four SVEA-96 LFA's will have no significant impact on the performance of the standby liquid control system.

The licensing basis for the spent fuel storage racks will not be invalidated by insertion of SVEA-96 LFA's. The SVEA-96 LFA's are at least 6-7 percent less reactive than the 8x8-2 fuel used for the licensing of the fuel storage racks in the WNP-2 plant FSAR.

5.2 Core Wide Transients

Based on WNP-2 safety analyses for previous cycles and the known behavior of the SVEA-96 assembly during core wide transient events, it has been concluded that the Load Rejection without Bypass (LRNB) event is the most limiting (bounding) event for the SVEA-96 LFA's. This event causes the fastest reactivity insertion rate of all core wide transient events analyzed in previous safety analyses.

The core wide response will not change significantly due to the introduction of the small number of SVEA-96 LFA's. Furthermore, the SVEA-96 assemblies have been designed to be compatible with the ANF-4 assemblies assumed to occupy the positions of the LFA's in the reload safety evaluation. The transient analysis results for fuel other than the SVEA-96 assemblies will, therefore, not be changed due to the introduction of the LFA's.

The local (fuel assembly) response to the transient event will be different for the ANF-4 and SVEA-96 assemblies. This is due mainly to the smaller fuel rod thermal time constant of the SVEA-96 assembly. The surface heat flux in the SVEA-96 assembly will respond faster to power generation changes in the fuel rods than in the ANF-4 assembly due to the smaller diameter fuel rods in the SVEA-96 bundle.

Calculations have been performed for the bounding LRNB event, and a relation has been established between the required Operating Limit Minimum Critical Power Ratio (OLMCPR) for the SVEA-96 LFA's and the OLMCPR for the ANF-4 assemblies being replaced by the LFA's. This relation has been established for a broad range of plant conditions and is, therefore, appropriate for a wide range of ANF-4 assembly OLMCPR values. Consequently, the relationship can be applied to transient events originating from normal operating conditions, single-loop operation, final feedwater temperature reduction conditions, no recirculation pump trip, and different scram speeds. The relation is a conservative upper bound to numerous calculations representing these different conditions. The relationship is shown in Figure 5. An OLMCPR of 1.31 for the ANF-4 assembly would, for example, require an OLMCPR of 1.48 for the SVEA-96 LFA's to provide assurance that the SLMCPR of 1.06 is not violated during a transient event.

5.3 Rod Withdrawal Error Event

Three dimensional core calculations have been performed to evaluate the influence of inserting four SVEA-96 LFA's on the response of the core to a control rod withdrawal error event.

The results show that the change in CPR divided by the initial CPR changes less than 1 % for fuel assemblies other than the SVEA-96 LFA's which are close to the SVEA-96 LFA's due to the insertion of the four LFA's. This means, for example, that a required CPR of 1.24 would change to 1.242 whit the LFA's inserted. This is considered to be a neglible effect. The change in CPR for the SVEA-96 LFA's during the event has been evaluated, and it has been demonstrated that the core wide LRNB transient event bounds the control rod withdrawal error event for the LFA's. This means that the LRNB event will always determine the required OLMCPR for the LFA's.

5.4 Accidents

The primary system response to a loss of coolant accident will not change due to the insertion of the small number of SVEA-96 LFA's. Calculations have been performed to determine the local SVEA-96 assembly response to the loss of coolant accident.

The results show that the power in an axial segment of the SVEA-96 assembly can be at least 6 % higher than in an ANF-4 assembly and still the peak cladding temperature, as well as the maximum oxidation of the cladding, will be lower in the SVEA-96 assembly than in the ANF-4 assembly during the LOCA event.

The actual power in an axial segment of the SVEA-96 LFA may be up to 4 % higher than the power corresponding to the Average Planar Linear Heat Generation Rate (APLHGR) computed by the PPC assuming an ANF-4 assembly in the LFA location. The underprediction of the local power in the SVEA-96 LFA by the PPC causes an underprediction of the average planar exposure for the same location. The determination of the Maximum Average Planar Linear Heat Generation Rate (MAPLHGR) for an ANF-4 assembly in the location of the SVEA-96 LFA could, therefore, be overpredicted by up to 2 % at an average planar exposure of about 20,000 MWd/MtU. The overprediction of the MAPLHGR would be zero at lower exposures (since the MAPLHGR then is exposure independent) and less at higher exposures. The power in an axial segment of the SVEA-96 LFA could, therefore, become up to 6 % higher than the power in the same position of an ANF-4 assembly in the LFA location allowed to operate at its MAPLHGR. The analyses have demonstrated that this still leads to lower peak cladding temperatures in the SVEA-96 assembly. Therefore, the Maximum Average Planar Linear Heat Generation Rate (MAPLHGR) limit for the ANF-4 assembly can be used directly as a limit for the SVEA-96 LFA's Average Planar Linear Heat Generation Rate (APLHGR) as computed by the PPC assuming an ANF-4 assembly in the LFA location.

The response to a control rod drop accident has been evaluated by identifying the most important parameters for this accident and establishing the change in these parameters due to the loading of four SVEA-96 LFA's. The most important parameter that is affected by the insertion of the LFA's is the control rod worth. This will increase approximately 30 pcm due to the insertion of the LFA's. The maximum deposited energy in the fuel following a control rod drop accident will increase less than 10 cal/gm due to this change in rod worth. This change is significantly less than the difference between the maximum fuel enthalpy calculated for this accident and the 280 cal/gm limit set for this kind of accident and is, therefore, acceptable.

5.5 Special Events

The core stability will not change significantly due to the loading of four SVEA-96 LFA's. The channel flow stability of the SVEA-96 assembly is substantially improved relative to the 8x8 assemblies presently in the core. This conclusion is based on both loop experiments using electrically heated full scale mockups of SVEA

assemblies and operating experience and measurements in operating reactors.

The loop experiments have been performed for all SVEA designs, including SVEA-64, SVEA-100, and SVEA-96, as well as for 8x8 fuel assemblies. They all confirm the improved channel flow stability of the SVEA design (including SVEA-96) compared to the 8x8 assembly.

Channel flow stability measurements have been performed in Nordic reactors (Forsmark 1, 2, 3, TVO I, II, and Oskarshamn 3) by monitoring the inlet flow to a number of fuel assemblies during operation. These measurements have been performed for 8x8, SVEA-64, and SVEA-100 fuel assemblies. They confirm the same improved stability performance of the SVEA design as observed in the loop experiments. The loop experiments have shown that the SVEA-96 and SVEA-100 designs have similar stability characteristics. Therefore, it is concluded that the improved stability of the SVEA-100 fuel compared to 8x8 fuel as observed in the reactor measurements also applies to the SVEA-96 fuel.

Loading of the SVEA-96 LFA's in positions other than those established to be acceptable may cause the power generation to become higher than expected and predicted by the PPC. The CPR during such operation may, therefore, be less than that predicted by the PPC for the locations which the LFA's are assumed to occupy. However, the SVEA-96 LFAs' have been designed to be compatible with the ANF-4 assemblies in the reload from a nuclear and thermal-hydraulic design point of view. The influence of misloading the SVEA-96 LFA's on the CPR will therefore be approximately the same for the SVEA-96 LFAs' as for the ANF-4 assemblies inserted at the same time. Also, because of the small number (4) of SVEA-96 LFA's in the core and their different appearance, the probabilities of a mislocation taking place and the mislocation going undetected are greatly reduced.

The nuclear design of the SVEA-96 LFA's is completely symmetric. There will therefore be no appreciable power distribution change resulting from the misorienting of the SVEA-96 LFA's. Misorienting a SVEA-96 LFA will have less effect than misorienting an ANF-4 assembly since the major difference is that the enrichment distribution within the SVEA-96 assembly is symmetric. Identifiable features on the SVEA-96 LFA's permit verification of proper orientation of the assembly. These features reduce the probability of misorientation.

6. TECHNICAL SPECIFICATIONS

No changes in Limiting Safety System Settings are required due to the insertion of the SVEA-96 LFA's. The LFA's will not materially affect the safety limits, and the analyses have been performed assuming that no changes are made.

The Maximum Linear Heat Generation Rate (MLHGR) for the SVEA-96 LFA's is given in Figure 6. The fuel rod mechanical design analyses have shown that this limit is acceptable. Figure 7 shows an effective SVEA-96 MLHGR limit to which the PPC output LHGR for the LFA positions can be compared assuming that the input to the PPC is based on the ANF-4 assemblies for the positions occupied by the SVEA-96 LFA's. The values in Figure 7 are based on Figure 6 as renormalized by the number of fuel rods in the SVEA-96 assembly (96) divided by the number in the ANF-4 assembly (62) and adjusted to account for the fact that the local power level in the LFA's may be underpredicted by up to 4 % in the PPC output as well as differences in the local power distributions in the two bundles.

The accident analyses have confirmed that if the PPC output Average Planar Linear Heat Generation Rate (APLHGR) for the SVEA-96 LFA's is below the MAPLHGR limit for the ANF-4 assemblies, the SVEA-96 LFA's will not lead the core during accident conditions. This MAPLHGR limit is shown in Figure 8. Equivalently, a SVEA-96 specific MAPLHGR limit may be established by taking the MAPLHGR limit for the ANF-4 fuel and multiplying it by 62/96 to account for the different number of fuel rods, and multiplying the result by 1.06. It has been demonstrated in the accident analyses that the peak cladding temperature for the SVEA-96 assembly is below the peak cladding temperature for the ANF-4 assembly even if the local power level is 6 % higher in the SVEA-96 assembly than in the ANF-4 assembly. This SVEA-96 specific MAPLHGR limit is given in Figure 9.

The OLMCPR for the SVEA-96 LFA's shall be established by using the relation between the OLMCPR for SVEA-96 and that for the ANF-4 fuel given in Figure 5 and the associated formula. The thermal-hydraulic design analyses have shown that the PPC output MCPR for the LFA locations is a conservative estimate of the actual SVEA-96 MCPR and, therefore, can be assumed to apply to the SVEA-96 LFA's.

There will be no additional surveillance requirements required due to the insertion of the SVEA-96 LFA's. All analyses have been performed within the presently valid power-to-flow map, and the conclusion from the stability evaluation is that no additional surveillance requirements are required.

7. REFERENCES

(1) ABB Atom Report UK 89-689
"Supplemental Lead Fuel Assembly Licensing Report - SVEA-96 to WNP-2"
December, 1989
(proprietary)

(2) ABB Atom Report UR 89-210
"SVEA-96 Critical Power Experimentation on a Full Scale 24 Rod Sub-bundle"
January 1990
(proprietary)

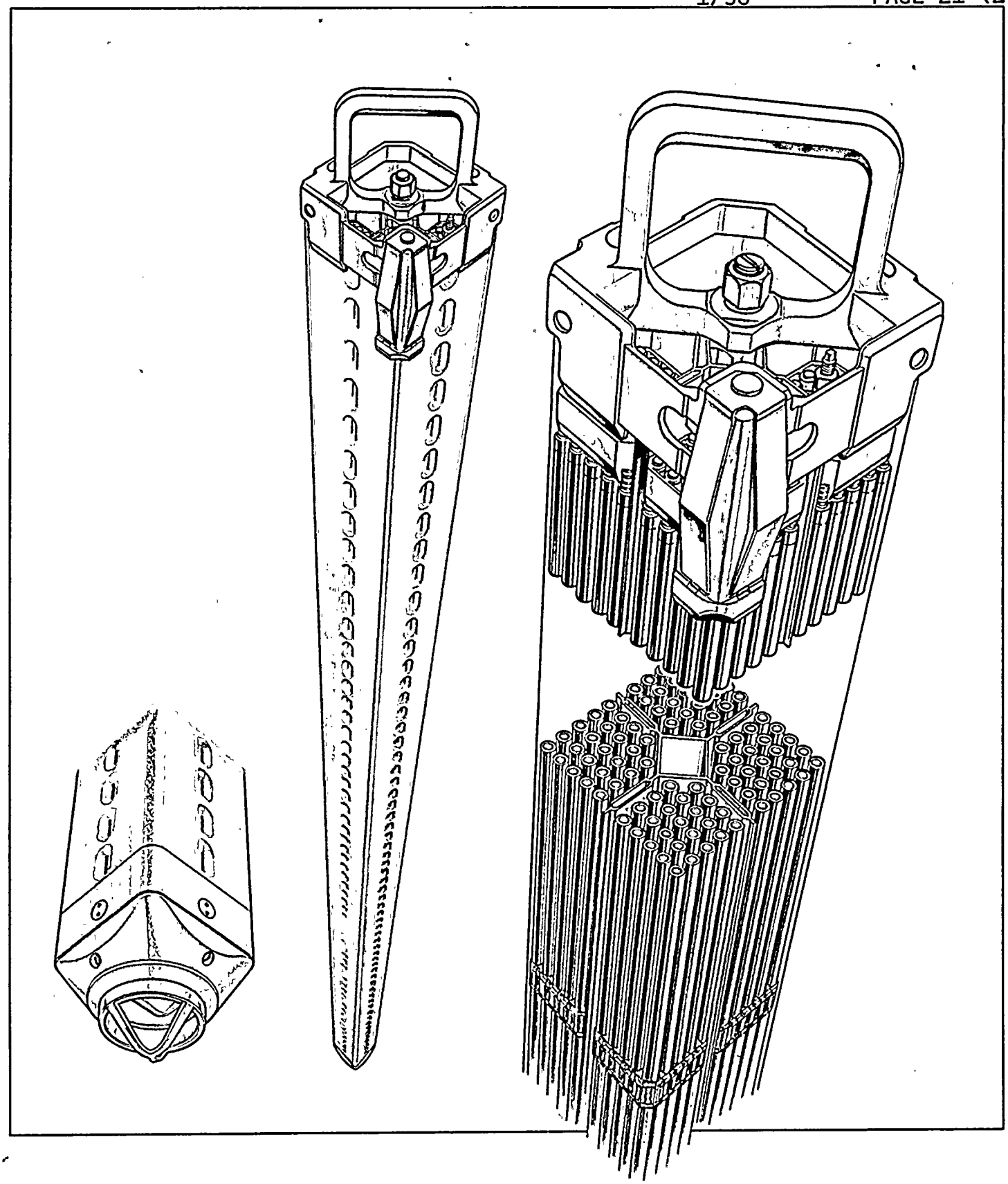

FIGURE 1 - SVEA-96 DESIGN

WNP-2
SVEA-96 LFA

Average enrichment 2.66 w/o U-235
Bundle average enrichment 2.51 w/o U-235

The design holds in the shaded area

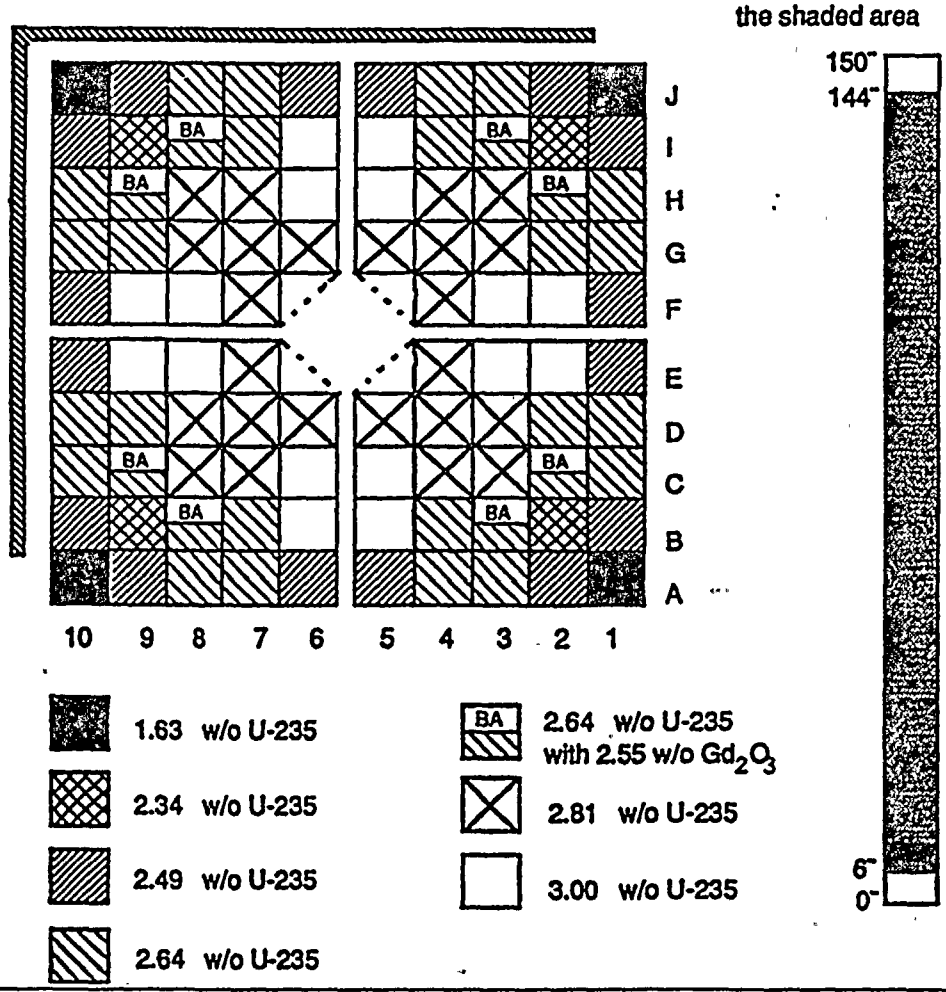

Prepared by:		☐ offer
Checked by:	–	☐ final enrichment design for uranium procurement
Approved by:	Date: 890927	☒ final enrichment & Gd design for fabrication
		☐ other
ABB Atom	BWR-1124	Rev:

FIGURE 2 - Enrichment Distribution

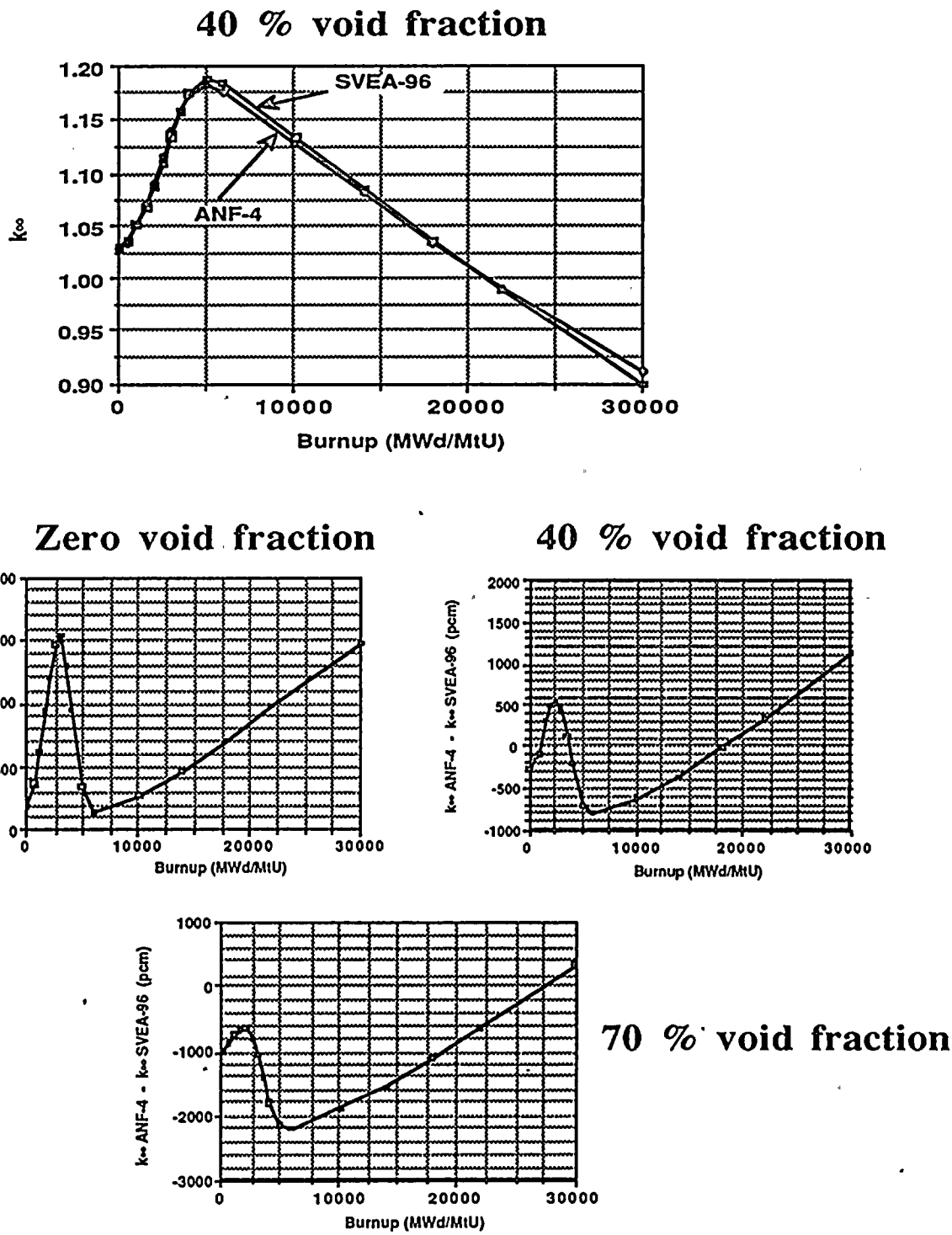

Figure 3 - Reactivities of SVEA-96 and ANF-4 Assemblies

ANF-4 Assembly

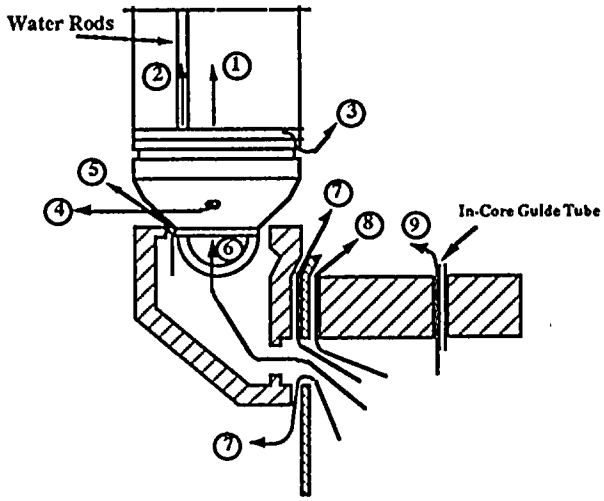

1. Active coolant flow
2. Water rod flow
3. Leakage between channel and bottom nozzle
4. Bottom nozzle bypass holes
5. Leakage between bottom nozzle and fuel support
6. Bottom nozzle inlet flow
7. Leakage between control rod guide tube and bottom nozzle
8. Leakage between control rod guide tube and core support plate
9. Leakage between in-core instrumentation guide tubes and core support plate

SVEA-96 Assembly

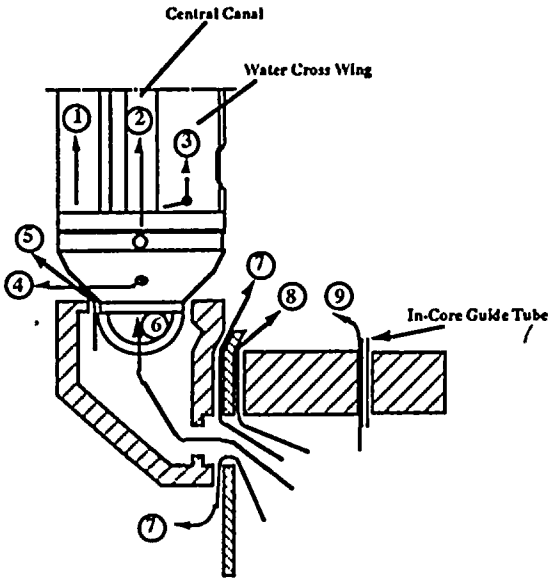

1. Active coolant flow
2. Flow through central canal
3. Flow through water cross wings (separate inlets)
4. Bottom nozzle bypass holes
5. Leakage between bottom nozzle and fuel support
6. Bottom nozzle inlet flow
7. Leakage between control rod guide tube and bottom nozzle
8. Leakage between control rod guide tube and core support plate
9. Leakage between in-core instrumentation guide tubes and core support plate

Figure 4 - Flow paths

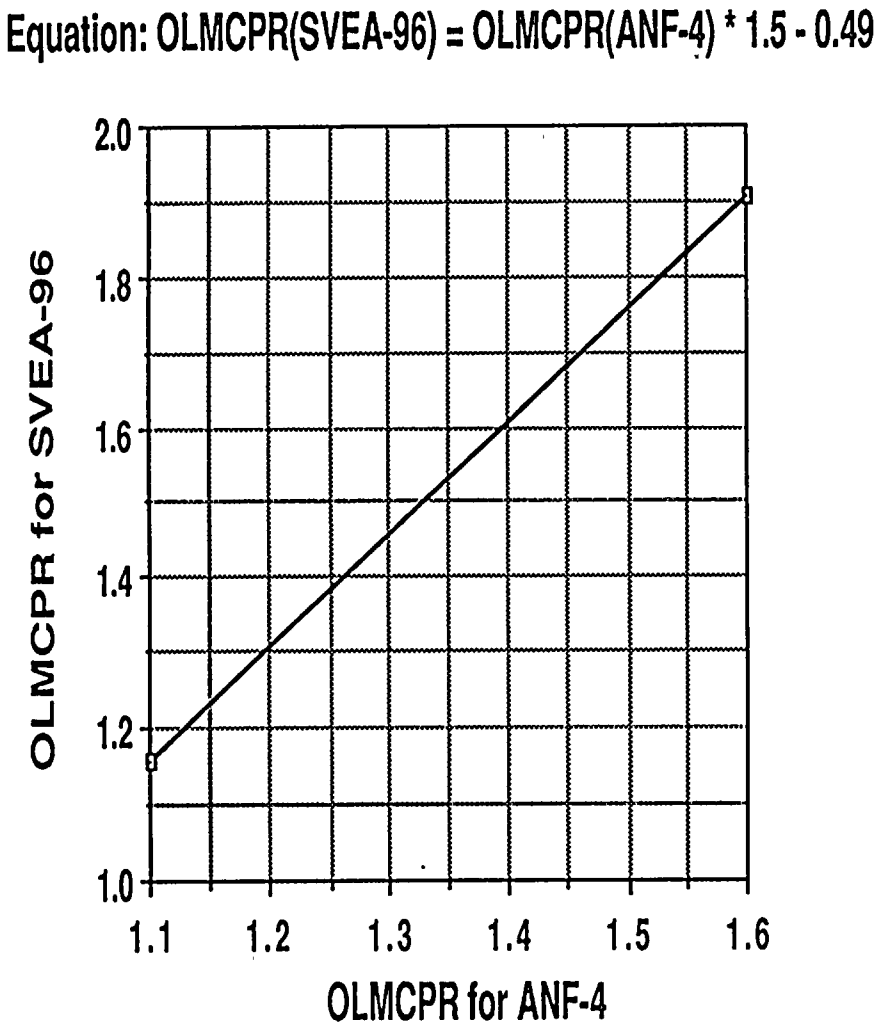

Figure 5 - OLMCPR for SVEA-96

Form 44952A

Figure 6 - SVEA-96 Specific MLHGR

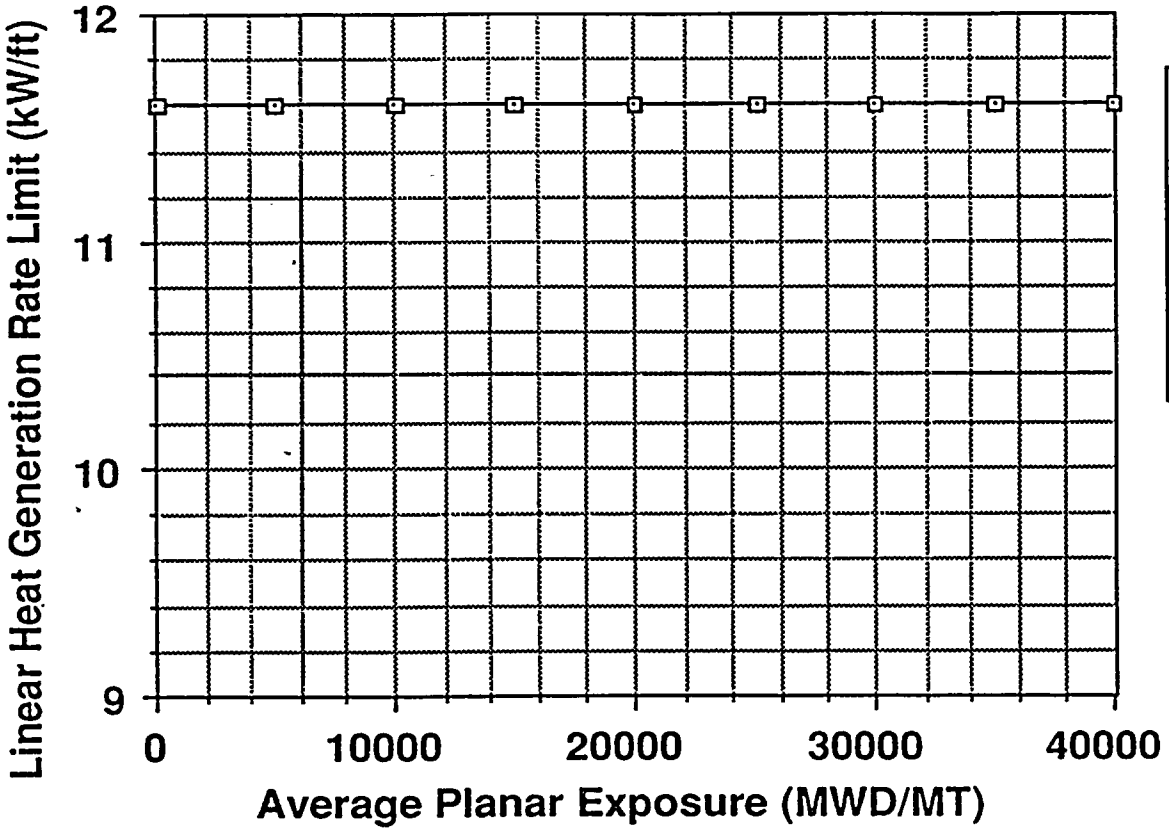

Exposure (MWD/MTU)	LHGR (kW/ft)
0 to	11.6
40,000	11.6

SVEA-96 Lead Fuel Assemblies

Linear Heat Generation Rate (LHGR) Limit Versus Average Planar Exposure

ABB ASEA BROWN BOVERI

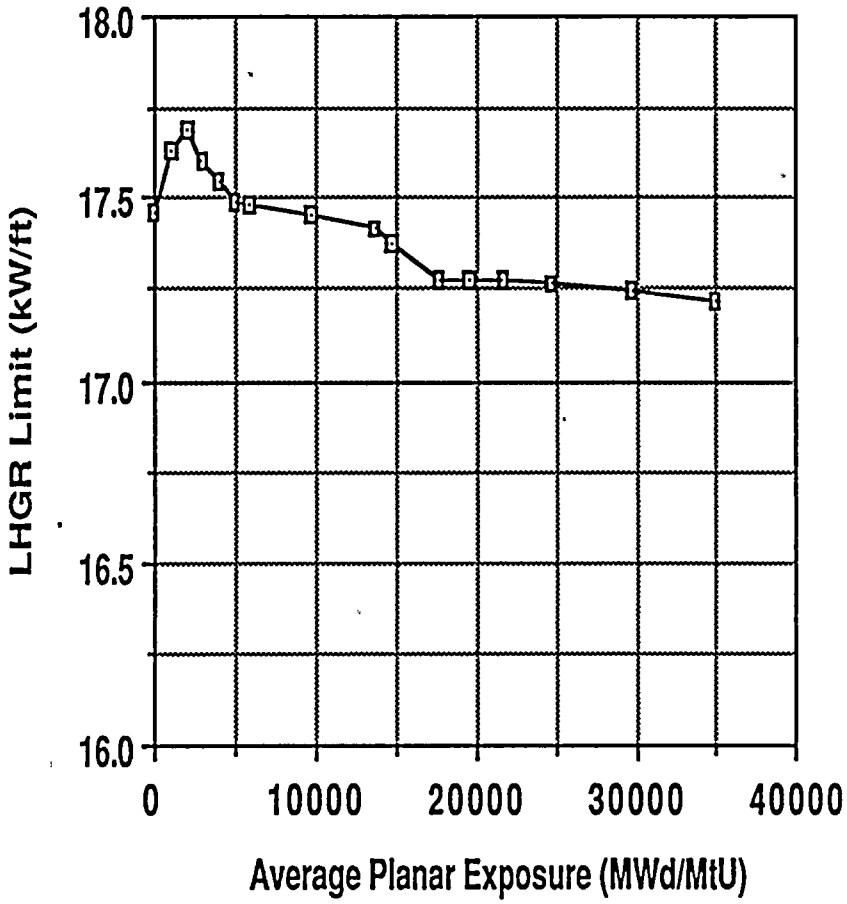

Burnup	MLHGR (kW/ft)
0	17.5
1,000	17.6
1,990	17.7
2,970	17.6
3,960	17.6
4,930	17.5
5,900	17.5
9,720	17.4
13,650	17.4
14,640	17.4
17,600	17.3
19,620	17.3
21,630	17.3
24,660	17.3
29,760	17.2
34,910	17.2

Figure 7 - MLHGR for PPC Comparison

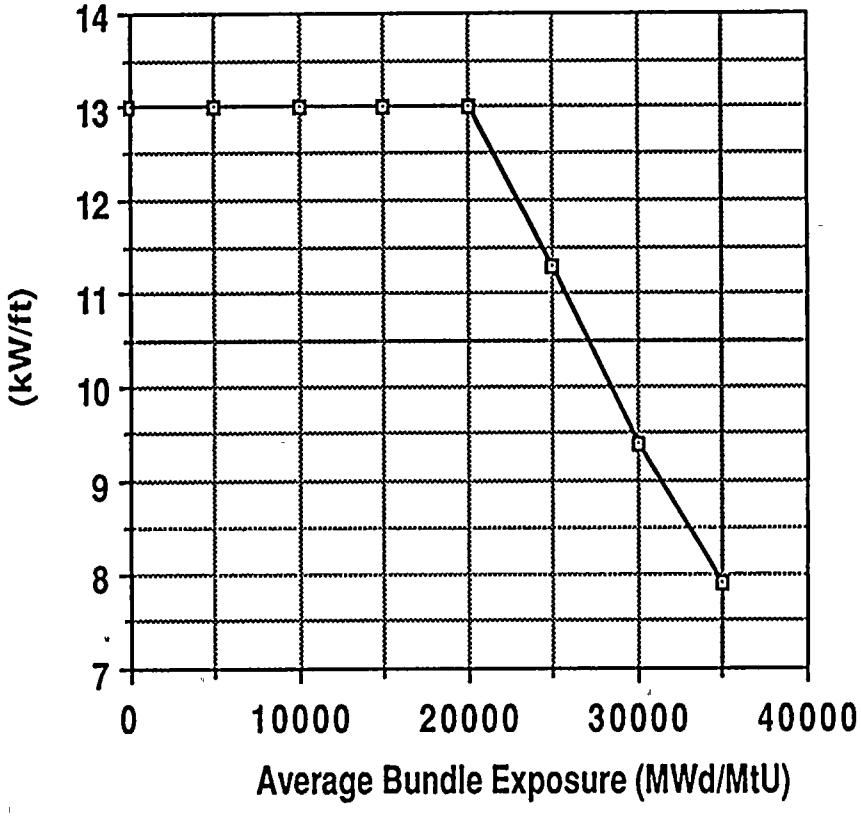

E (MWd/ MtU)	MAPLHGR (kW/ft)
0	13.0
5,000	13.0
10,000	13.0
15,000	13.0
20,000	13.0
25,000	11.3
30,000	9.4
35,000	7.9

Figure 8 - SVEA-96 MAPLHGR for Comparison to PPC Output

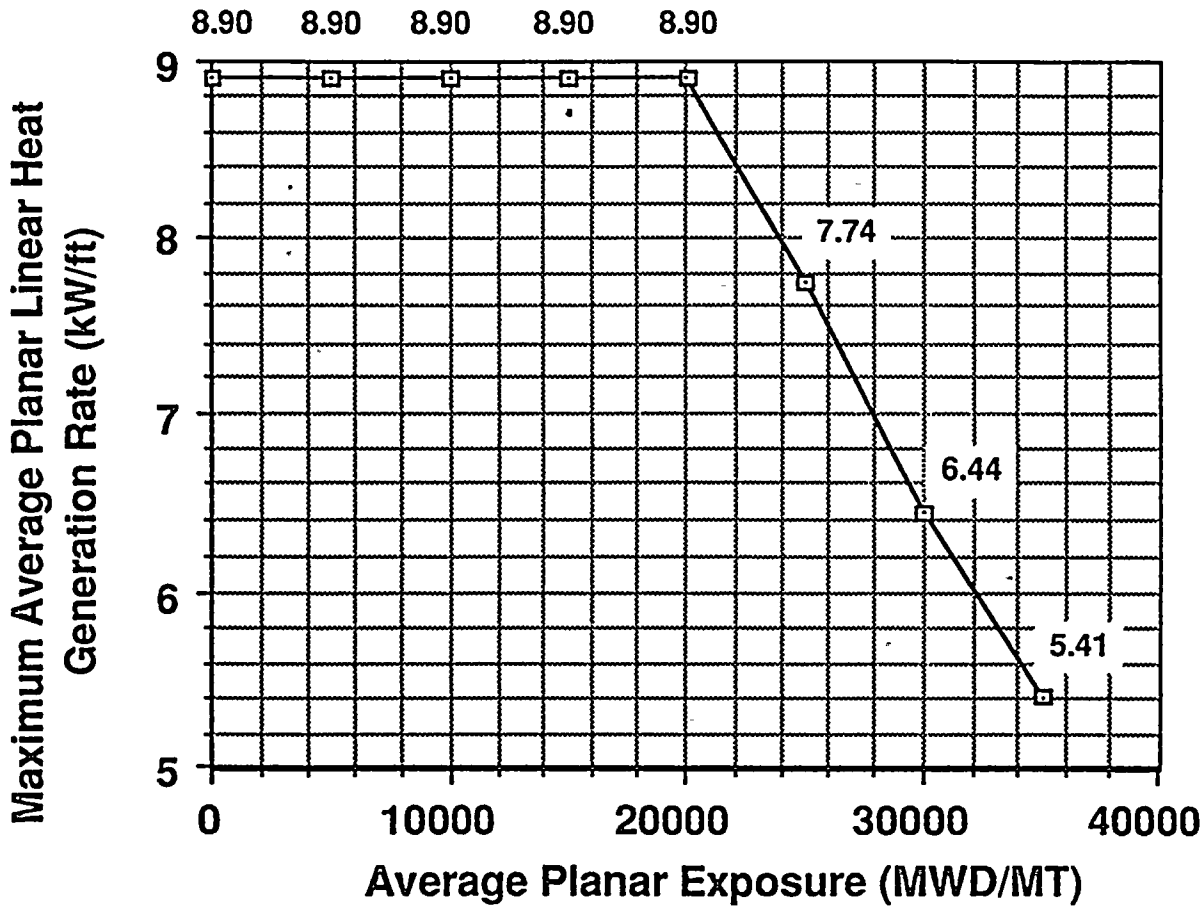

Average Planar Exposure (MWD/MTU)	MAPLHGR (kW/ft)
0	8.90
5,000	8.90
10,000	8.90
15,000	8.90
20,000	8.90
25,000	7.74
30,000	6.44
35,000	5.41

Maximum Average Planar Linear Heat Generation Rate (MAPLHGR) Versus Average Planar Exposure

SVEA-96 Lead Fuel Assemblies

Figure 9 - SVEA-96 Specific MAPLHGR

GE11 Lead Fuel Assembly Report

for

Washington Public Power Supply System

Nuclear Project No. 2

Reload 5 Cycle 6

December 28, 1989

GE Nuclear Energy

175 Curtner Avenue
San Jose, CA 95125

Important Notice Regarding Contents of This Report

Please Read Carefully

This report was prepared by General Electric Company (GE) solely for Washington Public Power Supply System (WPPSS) for WPPSS's use with the U. S. Nuclear Regulatory Commission (USNRC) to amend the operating license of WPPSS's Nuclear Project No. 2 (WNP-2). The information contained in this report is believed by GE to be an accurate and true representation of the facts known, obtained or provided to GE at the time this report was prepared.

The only undertakings of GE respecting information in this document are contained in contract number C-21099 between WPPSS and GE for GE11 Lead Fuel Assemblies and nothing contained in this document shall be construed as changing said contract. The use of this information except as defined by said contract, or for any purpose other than that for which it is intended, is not authorized; and with respect to any such unauthorized use, neither GE nor any of the contributors to this document makes any representation or warranty (expressed or implied) as to the completeness, accuracy or usefulness of the information contained in this document or that such use of such information may not infringe privately owned rights; nor do they assume any responsibility for liability or damage of any kind which may result from such use of such information.

Proprietary Information Notice

This document contains proprietary information of GE and is submitted in confidence solely for the purpose or purposes stated in the transmittal letter. No other use, direct or indirect, of the document or the information it contains is authorized. Furnishing this document does not convey any license, express or implied, to use any patented invention or any proprietary information of GE disclosed herein or any right to publish or make copies of the document without prior written permission of GE. This document shall be returned upon written request of GE.

GE11 Lead Fuel Assembly Report For WNP-2 Reload 5 Cycle 6

1. Background

Washington Public Power Supply System (WPPSS) plans to load four (4) Lead Fuel Assemblies (LFAs) as part of WPPSS Nuclear Project No. 2 (WNP-2), Reload 5. These fuel bundles, also referred to as GE11 LFAs, are planned to be in operation for up to five cycles as part of a joint program with General Electric Company (GE).

This report contains information that is to be provided to the NRC to comply with the Reference 1 letter which provides guidelines to be followed to license LFAs.

2. LFA Description

A description of the GE11 LFAs is contained in Appendix A (GE Proprietary). Table A-1 of Appendix A provides LFA design specifications. Fuel bundle and fuel rod descriptions for the LFAs are provided in Figures A-1 and A-2 of Appendix A.

3. LFA Program Objectives

The purpose of the GE11 LFA Program is to obtain test data to verify that fuel bundles with the design features given in Section 2 perform satisfactorily in service, prior to use of those features on a production basis.

4. LFA Measurements

Initial measurements on the LFAs will consist of pre-irradiation characterization of fuel pellets, clad tubing, fuel rods and fuel bundles. At subsequent refueling outages, the scope of inspections may consist of overall bundle visual examinations, channel bow and bulge measurements, bundle and rod length measurements, rod integrity and profilometry measurements and corrosion thickness measurements. The extent of such measurement and testing will be governed by the need to minimize the impact of such testing on refueling outage critical path, and by the degree of technical interest in implementing the design changes demonstrated in the LFA.

Results obtained from this LFA Program will be summarized in a timely manner in subsequent General Electric Fuel Experience Reports.

5. LFA Licensing

WNP-2 Reload 5 core licensing analyses will be provided by WPPSS or its contractor. Supporting evaluations for the GE11 LFAs were performed by GE as follows:

The GE11 LFAs were analyzed using the NRC approved GESTR-MECHANICAL, GEMINI NUCLEAR and ODYN methods described in Reference 2. The NRC approved GEXL-Plus critical power correlation for the GE8x8NB fuel design was applied to the GE11 LFAs. The R-factor was adjusted to fit available prototype test data for the GE11 fuel assembly design. The CHASTE model was used to compare MAPLHGR limits. These methods are fully capable of

analyzing all of the LFA features and the results demonstrate that the LFAs will operate within all design and safety limits of Reference 2. Because the nuclear, mechanical and thermal-hydraulic characteristics of the ANF fuel assembly are similar to other approved GE 8x8 designs, it too can be readily modeled using the approved GE methods.

To determine relative performance of the GE11 LFAs and ANF fuel assemblies, two sets of calculations were performed; one with and one without the LFAs in the core. Typical beginning-of-cycle (BOC), middle-of-cycle (MOC)/peak core reactivity, and end-of-cycle (EOC) conditions were calculated for both cores operating at rated core conditions. Fuel and core characteristics for the assumed equilibrium core were representative of those planned for cycle 6. Comparisons were made based on an ANF fuel assembly in a limiting core location and a GE11 LFA in the same core location operating at equivalent nodal powers. In practice, however, the LFAs will be loaded in core locations near the periphery such that they will not be the most limiting fuel assemblies in the core at any time during their residence in the core.

Results of the calculations, summarized in the following paragraphs, demonstrate that the GE11 LFAs have greater margins to licensing and design limits than the ANF fuel assemblies that will be used as the models in the reload analyses. The increased LHGR margin is due to the larger number of fuel rods in the LFA and increased MCPR margins result from the application of the GEXL-Plus critical power correlation for the high performance spacer in the LFA. The results also showed that replacing four ANF fuel assemblies with the four GE11 LFAs will not significantly impact core-wide characteristics. Therefore, modeling and tracking the GE11 LFAs as standard ANF fuel assemblies will be conservative and the LFAs can be loaded into the WNP-2 core and operated without any special considerations.

5.1 Nuclear Characteristics

The nuclear design of the GE11 LFAs was chosen to represent, as closely as practical, the characteristics of the standard ANF bundle. However, because of the advanced features of the GE11 LFAs, increased margin exists to design and licensing limits relative to the ANF bundles.

5.2 Normal Operation

Typical beginning-of-cycle and peak core reactivity conditions were calculated using approved methods for an equilibrium core of ANF fuel. Cases were run without and with the LFAs. The results demonstrate that the LFAs have an insignificant effect on core average performance and on the performance of adjacent bundles. The results also indicate that the LFAs have greater margin to MCPR and LHGR limits than the standard ANF bundle operating under similar conditions. Specific results are given in Table 1.

5.3 Shutdown Margin

The control rod reactivity worth of the cells containing the GE11 LFAs was calculated. Again, two cases were run for comparison purposes. The case for which the LFAs were included demonstrates greater shutdown margin (0.2% delta K) for the cell containing the LFA and for the adjacent cells. The LFAs will also result in increased margin for the Standby Liquid Control System shutdown condition.

5.4 Transients

The effect of the LFAs on core-wide transients is established by the fuel thermal time constant and the Scram, Doppler, and Void reactivities. The LFAs have a reduced time constant relative to the ANF bundles, and this will have a negligible but beneficial impact on core response. Also, because the LFAs represent only a very small fraction of the core, the core average Scram, Doppler and Void reactivities are not affected. Finally, because the LFAs will have higher thermal margins than the ANF fuel assembly during normal operation, sufficient margins will also be present during transients to compensate for the 4% larger CPR changes associated with the LFA's shorter time constant. Therefore, the MCPR operating limit for the ANF fuel may be conservatively applied to the LFAs.

For the Rod Withdrawal Error event, evaluations demonstrate that the LFAs have greater thermal margins than the standard reload assemblies.

The Fuel Loading Error event is precluded by the institution of special additional surveillance of the LFAs during loading.

5.5 Loss of Coolant Accident (LOCA)

LOCA evaluations demonstrate that the GE11 LFAs will have about 150 degrees-F lower peak clad temperature than typical 8x8 bundles at comparable planar powers. Therefore, the MAPLHGR limits for the ANF fuel bundles may be conservatively applied to the LFAs being tracked as 8x8 bundles.

6. References

1. Letter, T.A. Ippolito (NRC) to R.E. Engel (GE), *Lead Test Assembly Licensing,* September 23, 1981.

2. *GESTAR II, General Electric Standard Application for Reactor Fuel,* NEDE-24011-P-A-9, September 1988.

Table 1

Operating Margins For GE11 LFA Relative To ANF Reload Fuel

Cycle Exposure	LHGR*	MCPR
BOC	16%	17%
MOC (peak core reactivity)	19%	15%
EOC	4%	9%

* Based on LHGR limits of 15.0 kW/ft for the ANF fuel assembly and 14.4 kW/ft for the GE11 LFA.

Appendix A

GE11 LFA Fuel Bundle Description

for

Washington Public Power Supply System

Nuclear Project No. 2

(GE Company Proprietary)

December 28, 1989

GE11 LFA Fuel Bundle Description for WNP-2

The GE11 Lead Fuel Assemblies are designed for mechanical, nuclear, and thermal-hydraulic compatibility with the WNP-2 core. In addition to the PCI resistant barrier cladding, high performance spacer, interactive thick corner/thin wall channel with flow trippers, and combined axial enrichment and Gd loading utilized in currently approved fuel designs, the GE11 LFA includes the following new design features:

- o 9x9 fuel assembly configuration
- o Part Length Rods (PLRs)
- o Minimum Pressure Drop Upper Tie Plate
- o Higher Pressure Drop - Uniform Flow Distribution Lower Tie Plate
- o Two Large Central Water Rods (covering 7 fuel rod lattice positions)
- o Increased Burnup Capability

A discussion of each of these key design features is provided below. Summary data is provided in Table A-1, Figure A-1 and Figure A-2.

9x9 Fuel Assembly Configuration

With the increased number of fuel rods in the LFA, the linear heat generation rate is reduced with respect to the standard ANF bundle. This feature, in conjunction with the high performance spacer MCPR margins, enables the LFA to be modeled and tracked as a standard ANF bundle. The application of the ANF MCPR, LHGR and MAPLHGR limits conservatively bound the LFA performance.

Part Length Rods

A key design element of the LFAs is eight (8) part length fuel rods (PLRs) which are selectively located in the lattice to reduce two-phase pressure drop and increase cold shutdown reactivity margins. These PLRs terminate just past the top of the 5th spacer and enable this design to match the core and hot channel stability performance of currently operating P8x8R and BP8x8R designs.

Because of the large two-phase pressure drop reduction associated with the PLRs, it was possible to increase the single-phase pressure drop of the lower tie plate and thus achieve additional core and channel stability benefit. The location of the PLRs has been chosen to maximize critical power for this design.

The PLRs also increase the moderator-to-fuel ratio in the top of the core in the cold state, which significantly improves cold shutdown margins.

Minimum Pressure Drop Upper Tie Plate

The upper tie plate (Figure A-1) is synergistically designed with the two large water rods and the part length fuel rods to minimize two-phase pressure drop. Lowering the two-phase pressure drop will result in maintaining core and channel stability of these LFAs equivalent to that of the P8x8R and BP8x8R designs. This new upper tie plate design also meets all handling and seismic design loads.

Higher Pressure Drop - Uniform Flow Distribution Lower Tie Plate

The improved lower tie plate (LTP) increases single-phase pressure drop to maintain core and channel stability equivalent to the P8x8R and BP8x8R designs, and to maintain a relatively uniform local bundle flow distribution. The primary approach to achieving good channel hydraulic stability is to minimize the ratio of two-phase to single-phase bundle pressure drop in the fuel assembly. Therefore, in addition to the reduction of two-phase bundle pressure drop, the pressure drop of the LTP was increased. The LTP pressure drop increase has approximately the same positive effect on channel hydraulic stability as the reduction of two-phase pressure drop.

Two Large Central Water Rods

The two large central water rod design (Figure A-1) provides good critical power and pressure drop performance. The spacer capture water rod tabs, and axially varying diameter are very similar in design to the GE8x8NB assembly. The water rod transition zones are very similar to the GE8x8NB water rod design.

Increased Burnup Capability

Many of the design features discussed above are keys in providing greater overall burnup capability. The major reasons for increased burnup are improved fuel cycle economics, greater flexibility, and longer cycle length capability. These LFAs have been designed for operating residence times consistent with their exposure capability. The LFAs have been designed for peak pellet exposures of 70 GWd/MT which corresponds to a batch average discharge exposure of approximately 45 GWd/MT. Increased prepressurization has also been included in the design to provide for greater burnup capability.

Table A-1

WNP-2 GE11 LFA
Design Specifications

Fuel Assembly	
Geometry	9x9
Rod Pitch (in.)	0.566
Fuel Rods	
Fill Gas	He
Fill Pressure (atm.)	10
Number of Full Length Rods	66
Number of Part Length Rods	8
Fuel	
Pellet Diameter (in.)	0.376
Pellet Length (in.)	0.38
Pellet Immersion Density (%TD)	96.5
Cladding	
Outside Diameter (in.)	0.440
Thickness (in., Including barrier)	0.028
Water Rod	
Number of Water Rods	2
Outside Diameter (in.)	0.980
Thickness (in.)	0.030
Spacers	
Number per Bundle	7
Pitch (in.)	20.15
Fuel Channel	
Inside Dimension (in.)	5.278
Wall Thickness, corner/side (in.)	0.120/0.075
Active Fuel Length	
Full length UO_2 Rods (in.)	146
Part length UO_2 Rods (in.)	90
Gadolinia Rods (in.)	140
Heat Transfer Area (ft^2)	99.0
Finger Springs	yes
Lower Tieplate Bypass Flow Holes	yes

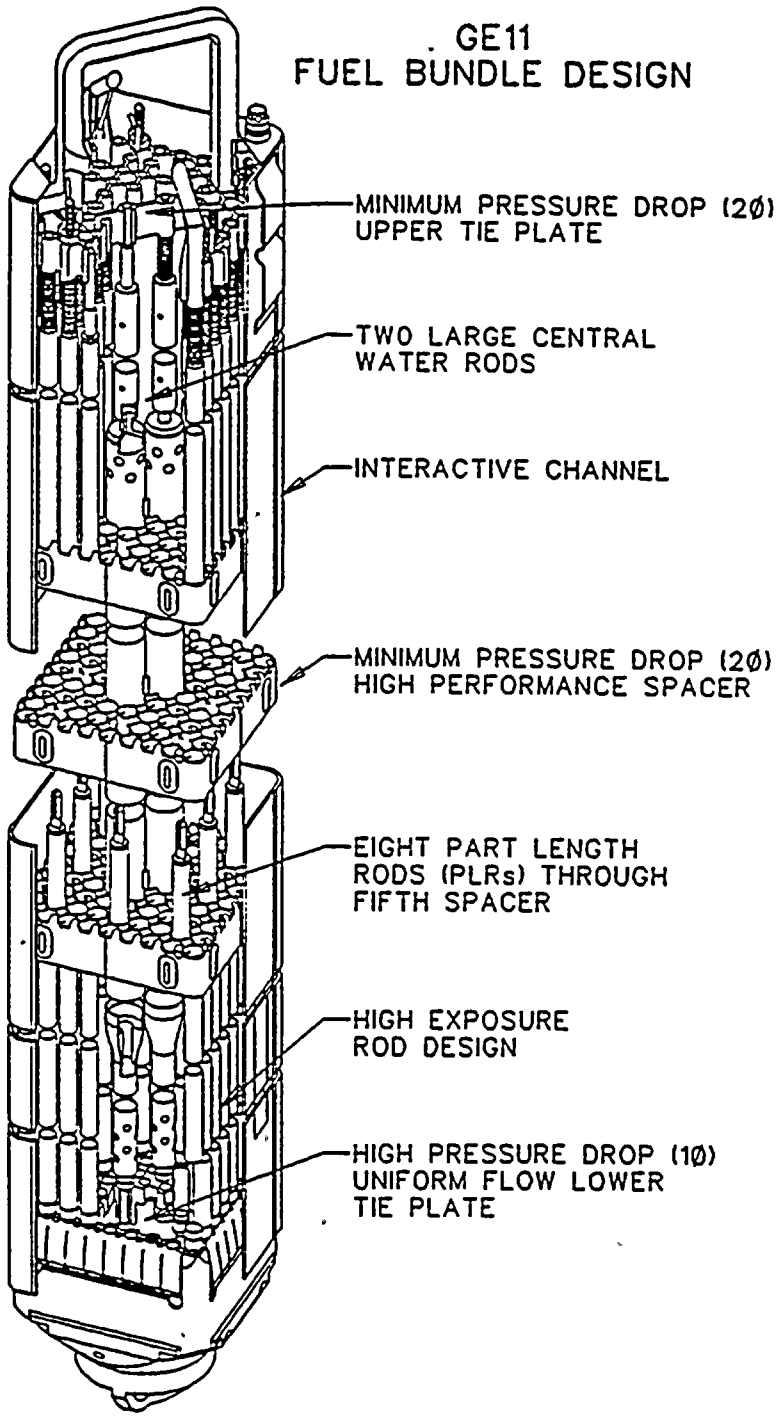

Figure A-1. GE11 LFA Fuel Bundle Design

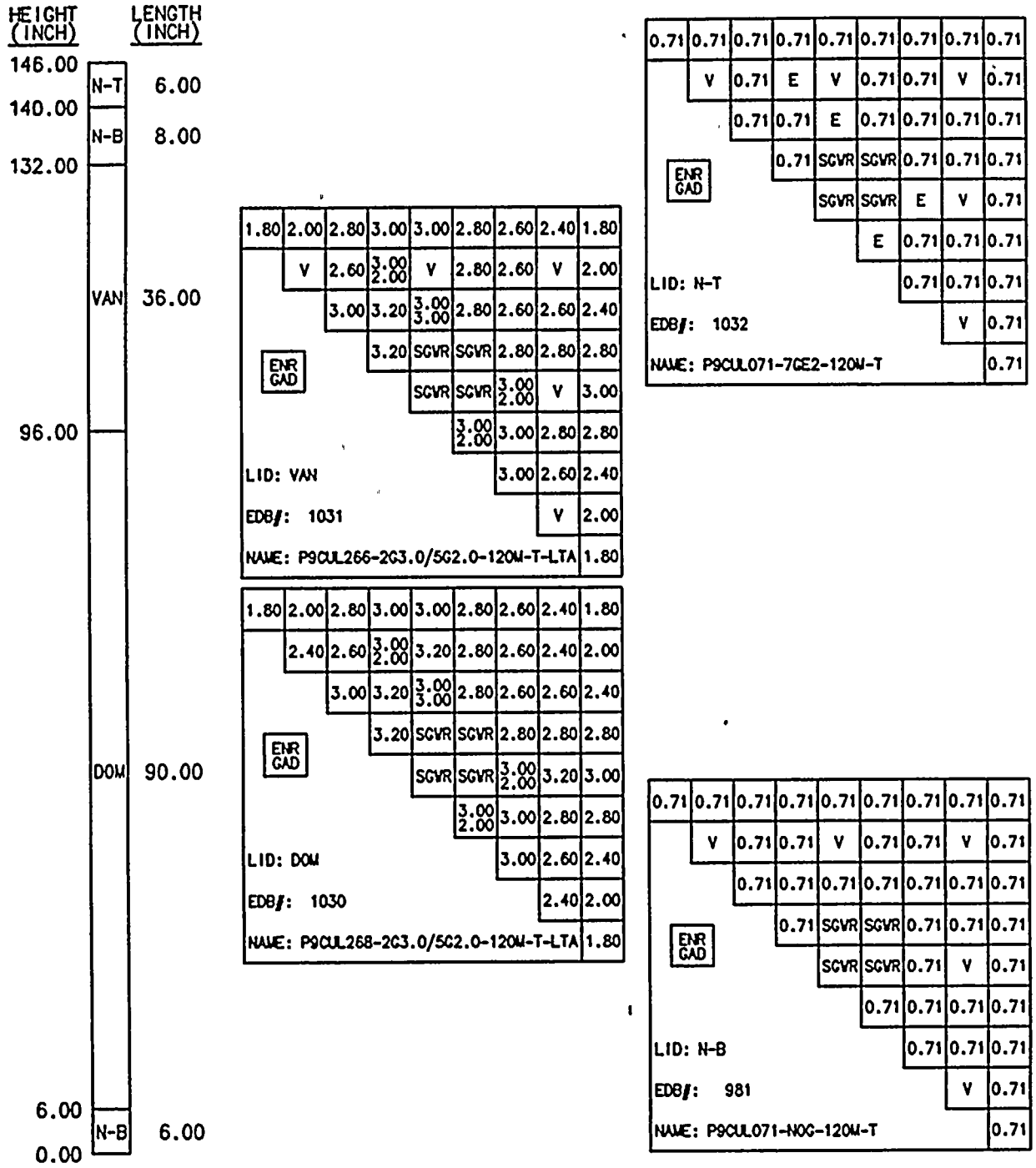

Figure A-2. Axial Enrichment and Rod Type Distribution for the WNP-2 GE11 LFA Bundle