# ACCELERATED DISTRIBUTION DEMONSTRATION SYSTEM

REGULATORY INFORMATION DISTRIBUTION SYSTEM (RIDS)

ACCESSION NBR:8810120110 DOC.DATE: 88/10/03 NOTARIZED: NO DOCKET #
FACIL:50-397 WPPSS Nuclear Project, Unit 2, Washington Public Powe 05000397
AUTH.NAME AUTHOR AFFILIATION
WASHINGTON,S.L. Washington Public Power Supply System
RECIP.NAME RECIPIENT AFFILIATION

SUBJECT: LER 88-031-00:on 880902,found that due to single failure control room HVAC sys could operate in recirculation mode.
W/8 ltr.

DISTRIBUTION CODE: IE22D COPIES RECEIVED:LTR 1 ENCL 1 SIZE: 8
TITLE: 50.73 Licensee Event Report (LER), Incident Rpt, etc.

NOTES:

| | RECIPIENT ID CODE/NAME | COPIES LTTR | COPIES ENCL | RECIPIENT ID CODE/NAME | COPIES LTTR | COPIES ENCL |
|---|---|---|---|---|---|---|
| | PD5 LA | 1 | 1 | PD5 PD | 1 | 1 |
| | SAMWORTH,R | 1 | 1 | | | |
| INTERNAL: | ACRS MICHELSON | 1 | 1 | ACRS MOELLER | 2 | 2 |
| | ACRS WYLIE | 1 | 1 | AEOD/DOA | 1 | 1 |
| | AEOD/DSP/NAS | 1 | 1 | AEOD/DSP/ROAB | 2 | 2 |
| | AEOD/DSP/TPAB | 1 | 1 | ARM/DCTS/DAB | 1 | 1 |
| | DEDRO | 1 | 1 | NRR/DEST/ADS 7E | 1 | 0 |
| | NRR/DEST/CEB 8H | 1 | 1 | NRR/DEST/ESB 8D | 1 | 1 |
| | NRR/DEST/ICSB 7 | 1 | 1 | NRR/DEST/MEB 9H | 1 | 1 |
| | NRR/DEST/MTB 9H | 1 | 1 | NRR/DEST/PSB 8D | 1 | 1 |
| | NRR/DEST/RSB 8E | 1 | 1 | NRR/DEST/SGB 8D | 1 | 1 |
| | NRR/DLPQ/HFB 10 | 1 | 1 | NRR/DLPQ/QAB 10 | 1 | 1 |
| | NRR/DOEA/EAB 11 | 1 | 1 | NRR/DREP/RAB 10 | 1 | 1 |
| | NRR/DREP/RPB 10 | 2 | 2 | NRR/DRIS/SIB 9A | 1 | 1 |
| | NUDOCS-ABSTRACT | 1 | 1 | REG FILE 02 | 1 | 1 |
| | RES TELFORD,J | 1 | 1 | RES/DSIR DEPY | 1 | 1 |
| | RES/DSIR/EIB | 1 | 1 | RGN5 FILE 01 | 1 | 1 |
| EXTERNAL: | EG&G WILLIAMS,S | 4 | 4 | FORD BLDG HOY,A | 1 | 1 |
| | H ST LOBBY WARD | 1 | 1 | LPDR | 1 | 1 |
| | NRC PDR | 1 | 1 | NSIC HARRIS,J | 1 | 1 |
| | NSIC MAYS,G | 1 | 1 | | | |

F I I S / A D D S

R I D S / A D D S

TOTAL NUMBER OF COPIES REQUIRED: LTTR 46 ENCL 45

NRC Form 366
(9-83)

U.S. NUCLEAR REGULATORY COMMISSION
APPROVED OMB NO. 3150-0104
EXPIRES: 8/31/88

# LICENSEE EVENT REPORT (LER)

| FACILITY NAME (1) | DOCKET NUMBER (2) | PAGE (3) |
|---|---|---|
| Washington Nuclear Plant - Unit 2 | 0 5 0 0 0 3 9 7 | 1 OF 0 7 |

TITLE (4) Single Failure Could Cause Control Room HVAC to Operate in an Unanalyzed Operation Mode Due to Design

| EVENT DATE (5) | | | LER NUMBER (6) | | | REPORT DATE (7) | | | OTHER FACILITIES INVOLVED (8) | |
|---|---|---|---|---|---|---|---|---|---|---|
| MONTH | DAY | YEAR | YEAR | SEQUENTIAL NUMBER | REVISION NUMBER | MONTH | DAY | YEAR | FACILITY NAMES | DOCKET NUMBER(S) |
| 0 9 | 0 2 | 8 8 | 8 8 | 0 3 1 | 0 0 | 1 0 | 0 3 | 8 8 | | 0 5 0 0 0 |
| | | | | | | | | | | 0 5 0 0 0 |

OPERATING MODE (9): 4

POWER LEVEL (10): 0 0 0

THIS REPORT IS SUBMITTED PURSUANT TO THE REQUIREMENTS OF 10 CFR §: (Check one or more of the following) (11)

| | | | |
|---|---|---|---|
| 20.402(b) | 20.405(c) | 50.73(a)(2)(iv) | 73.71(b) |
| 20.405(a)(1)(i) | 50.36(c)(1) | 50.73(a)(2)(v) | 73.71(c) |
| 20.405(a)(1)(ii) | 50.36(c)(2) | 50.73(a)(2)(vii) | OTHER (Specify in Abstract below and in Text, NRC Form 366A) |
| 20.405(a)(1)(iii) | 50.73(a)(2)(i) | 50.73(a)(2)(viii)(A) | |
| 20.405(a)(1)(iv) | X 50.73(a)(2)(ii) | 50.73(a)(2)(viii)(B) | |
| 20.405(a)(1)(v) | 50.73(a)(2)(iii) | 50.73(a)(2)(x) | |

LICENSEE CONTACT FOR THIS LER (12)

| NAME | TELEPHONE NUMBER (AREA CODE) |
|---|---|
| S.L. Washington, Compliance Engineer | 5 0 9 3 7 7 - 2 0 8 0 |

COMPLETE ONE LINE FOR EACH COMPONENT FAILURE DESCRIBED IN THIS REPORT (13)

| CAUSE | SYSTEM | COMPONENT | MANUFACTURER | REPORTABLE TO NPRDS | CAUSE | SYSTEM | COMPONENT | MANUFACTURER | REPORTABLE TO NPRDS |
|---|---|---|---|---|---|---|---|---|---|
| | | | | | | | | | |
| | | | | | | | | | |

| SUPPLEMENTAL REPORT EXPECTED (14) | | EXPECTED SUBMISSION DATE (15) | MONTH | DAY | YEAR |
|---|---|---|---|---|---|
| X YES (If yes, complete EXPECTED SUBMISSION DATE) | NO | | 0 8 | 0 1 | 8 9 |

ABSTRACT (Limit to 1400 spaces, i.e., approximately fifteen single-space typewritten lines) (16)


On September 2, 1988 a Design Engineer determined that due to a single failure the Control Room Heating and Ventilation (HVAC) System could operate in the recirculation mode during emergency conditions. This unanalyzed condition was found while performing an engineering evaluation of the safety significance of the event reported in LER 88-005-00.

During a Loss of Coolant Accident (LOCA) the normal fresh air intake for the Control Room HVAC is isolated and two remote air intake lines are opened. Each remote air intake line has two isolation valves and one valve is powered from division 1 and the other from division 2. A single failure (not a loss of power failure) in a power division could cause a valve in each remote air intake line to isolate. With the loss of all fresh air input the Control Room HVAC would continue to operate but in the recirculation mode. In the recirculation mode the Control Room would not remain pressurized with respect to surrounding areas, and operating post LOCA in this mode is not analyzed (for control room habitability).

Immediate corrective actions were: The motor operators for the four (two per line) remote air intake isolation valves were replaced with manual operators. Two of the four radiation purge line isolation valves motor operators were electrically disconnected. Both isolation valves on one remote intake line were locked open to assure that a single failure could not result in recirculation mode operation. The Control Room Emergency Filtration System was started and the Control Room HVAC System is operating in the pressurization mode.


Cert No. p518-847-292

IE22
1/1


8810120110 881003
PDR ADOCK 05000397
S PNU


NRC Form 366

Abstract (Cont'd)

The cause of this event was the Plant Architect/Engineer (AE) did not provide a Control Room HVAC System design which protected the system against all possible single failures. The root cause of this event is a lack of communication between AE design groups.

Further corrective actions include: The Control Room HVAC recirculation mode of operation will be analyzed and inleakage tests conducted, if necessary, to determine the safety significance of this event. A technical specification change will be requested to allow normal Control Room HVAC operation. A letter will be sent to Burns & Roe Inc. requesting a 10CFR Part 21 evaluation.

The safety significance of this event is being evaluated and a supplemental report will be submitted when it is completed.

## Plant Conditions

a) Power Level - 0%
b) Plant Mode - 4 (Cold Shutdown)

## Event Description

On September 2, 1988 a Design Engineer determined that, due to single failures, the Control Room Heating and Ventilation (HVAC) System could operate during emergency conditions in the recirculation mode, which is an unanalyzed condition. This unanalyzed condition was discovered while performing an engineering evaluation committed to in LER 88-005-00 to evaluate the potential effects of minor Control Room HVAC system changes on system bypass flow.

The following brief description of the Control Room HVAC System (before modification) for normal operation and emergency operation during a Loss of Coolant Accident (LOCA) is presented to aid in understanding the event and the changes made to the system. Figure 1 is a partial diagram of the Control Room HVAC System prior to the event. The Control Room HVAC System consists of two redundant systems for both normal and emergency operation. During normal operation, 1000cfm of fresh air from the normal roof intake Radwaste Building is mixed with 20,000cfm of recirculated air (through fan 51A or 51B). Seven hundred and fifty (750) cfm is exhausted from the control room through fan 51 and the remaining 250cfm pressurizes the control room and is exfiltrated. Also during normal operation, the remote air intake isolation valves (51A and B and 52A and B) are closed and the radiation monitor purge line valves (51D and E and 52D and E) are open with radiation monitor purge line fans 53A and B operating. During a LOCA when any of the following trip levels are reached 1) High drywell pressure ("F" signal), 2) Low low reactor water level ("A" signal) or 3) Reactor building ventilation exhaust high radiation ("Z" signal) the following actions occur:

a) The normal roof intake Radwaste Building is isolated by closing valves 51C and 52C.

b) The 750cfm control room exhaust fan (51) de-energizes.

c) The remote air intake isolation valves (51A, 51B, 52A, and 52B) open and the radiation monitor purge line isolation valves (51D, 51E, 52D and 52E) close. The remote air intake isolation valves and the radiation monitor purge line isolation valves are interlocked so when an intake line is opened the associated purge line is isolated.

d) The control room emergency filtration system is automatically started and draws 1000cfm of fresh air through the remote air intakes. This additional air, when added to the recirculated air, pressurizes the control room.

The event described in LER 88-005 was for leakage around the emergency filters in excess of the technical specification allowable limit. During the engineering evaluation committed to in LER 88-005 to determine the effect of the excess leakage on control room habitability, a design engineer determined that postulated single failures could cause some combination of remote air intake line isolation valves to fail to open or to re-isolate and; thus, isolate both remote air intake lines. If this condition existed during LOCA conditions, the Control Room HVAC would be running in a recirculation mode only since the normal roof intake is also isolated. In the recirculation mode the 20,000cfm would continue to be drawn from the control room and recirculated back to the control room; however, without the fresh air input the control room would not be pressurized. In a neutral pressure condition the inleakage to the control room would increase and this condition is not analyzed.

Immediate Actions

The planned Plant Startup was delayed until the following actions were completed. 1) The motor operators were removed and manual operators were installed on the remote air intake isolation valves (51A and B and 52A and B). The valve operators were changed to manual so the isolation valves on one remote intake line could be opened without an FAZ signal present; thereby, assuring that a single failure could not cause operation in the recirculation mode. With this remote air intake line open, the control room emergency filtration system was started. This put the Control Room HVAC system in the pressurization mode of operation which satisfied the action statement of Technical Specification 3.3.7.1. The current Plant configuration is the West remote intake line is open (51A and 52A are locked open) and the East remote intake line is closed with 52B locked closed and 51B locked open. Figure 2 shows the post event Control Room HVAC configuration. 2) Two of the radiation purge line isolation valve electro-pneumatic operator motors (52D and 51E) were electrically disconnected which causes the valves to open. This was done so that only one manual action is required to isolate a remote path and cause the associated purge path to open or vice versa. 3) The 750cfm control room exhaust fan (51) was de-energized. 4) Specific directions for Plant Operators to execute to maintain design bases in the event of a LOCA were provided in (approved) deviated Plant procedures. Each new operations crew was provided training by Operation Managers.

| FACILITY NAME (1) | DOCKET NUMBER (2) | LER NUMBER (6) YEAR | SEQUENTIAL NUMBER | REVISION NUMBER | PAGE (3) |
|---|---|---|---|---|---|
| Washington Nuclear Plant - Unit 2 | 0 5 0 0 0 3 9 7 | 8 8 | — 0 3 1 | — 0 0 | 0 4 OF 0 7 |

TEXT (If more space is required, use additional NRC Form 366A's) (17)

## Further Evaluation and Corrective Action

A. Further Evaluation

This event was reported per 10CFR50.72(b)(2)(i) on September 2, 1988 at 1702 hours. The event is reported per 10CFR50.73(a)(2)(ii)(A). For this event the condition is unanalyzed but the actual safety significance has not yet been determined; however, based on a review of existing analysis this condition is potentially safety significant.

There were no structures, systems, or components inoperable prior to this event which contributed to the event.

The cause of this event was the failure of the Plant Architect/Engineer (Burns & Roe Inc.) to provide a system design for which a single failure could not isolate both remote air intakes and cause the Control Room HVAC System to operate in the recirculation mode, or to analyze the recirculation mode of operation. The root cause of this event is a lack of communication between the Architect/Engineer design groups.

B. Further Corrective Action

1) The Control Room HVAC recirculation mode of operation will be analyzed and, if necessary, tests conducted to determine control room inleakage in the recirculation mode to determine Post LOCA control room habitability.

2) A Plant Technical Specification change will be requested to allow normal (not in the emergency filtration pressurization mode) operation of the control room HVAC system with the present Plant configuration.

3) A letter will be sent to Burns & Roe Inc., requesting a 10CFR Part 21 evaluation.

## Safety Significance

The safety significance of this event will be determined by completing the engineering evaluation (committed to in LER 88-005) and performing tests to determine the actual inleakage to the Control Room when the Control Room HVAC System is operated in the recirculation mode. The change from automatic to manual operation of the remote air intake isolations valves has been analyzed as required and does not increase the possibility of an accident, nor does it create the possibility of a new or different kind of accident. A supplemental report will be submitted when the engineering evaluation of the safety significance of this event is completed.

## Similar Events

None

| FACILITY NAME (1) | DOCKET NUMBER (2) | LER NUMBER (6) YEAR | SEQUENTIAL NUMBER | REVISION NUMBER | PAGE (3) |
|---|---|---|---|---|---|
| Washington Nuclear Plant - Unit 2 | 0 5 0 0 0 3 9 7 | 8 8 | — 0 3 1 | — 0 0 | 0 5 OF 0 7 |

TEXT (If more space is required, use additional NRC Form 366A's) (17)

EIIS Information

| Text Reference | EIIS Reference System | EIIS Reference Component |
|---|---|---|
| Control Room Heating and Ventilation (HVAC) System | VH | - - - - - |
| Normal Fresh Air Intake (Normal Roof Intake Radwaste Building) | VH | - - - - - |
| Remote Air Intake Line, (East or West) | VH | - - - - - |
| Remote Air Intake Isolation Valves ( 51A and B and 52A and B) | VH | ISV |
| Remote Air Intake Isolation Valve Motor Operator (Electro-Pneumatic Motor Operator) | VH | 84 |
| Radiation Purge Line Isolation Valves (51D and E and 52D and E) | VH | ISV |
| Radiation Purge Line Isolation Valve Motor Operator (Electro-Pneumatic Motor Operators) | VH | 84 |
| Control Room Emergency Filtration System Fan 51A or 51B | VH | FAN |
| 750cfm Control Room Exhaust Fan (51) | VH | FAN |
| Radiation Purge Line Exhaust Fans (53A and B) | VH | FAN |

| FACILITY NAME (1) | DOCKET NUMBER (2) | LER NUMBER (6) YEAR | SEQUENTIAL NUMBER | REVISION NUMBER | PAGE (3) |
|---|---|---|---|---|---|
| Washington Nuclear Plant - Unit 2 | 0 5 0 0 0 3 9 7 | 8 8 | — 0 3 1 | — 0 0 | 0 6 OF 0 7 |

TEXT (If more space is required, use additional NRC Form 366A's) (17)

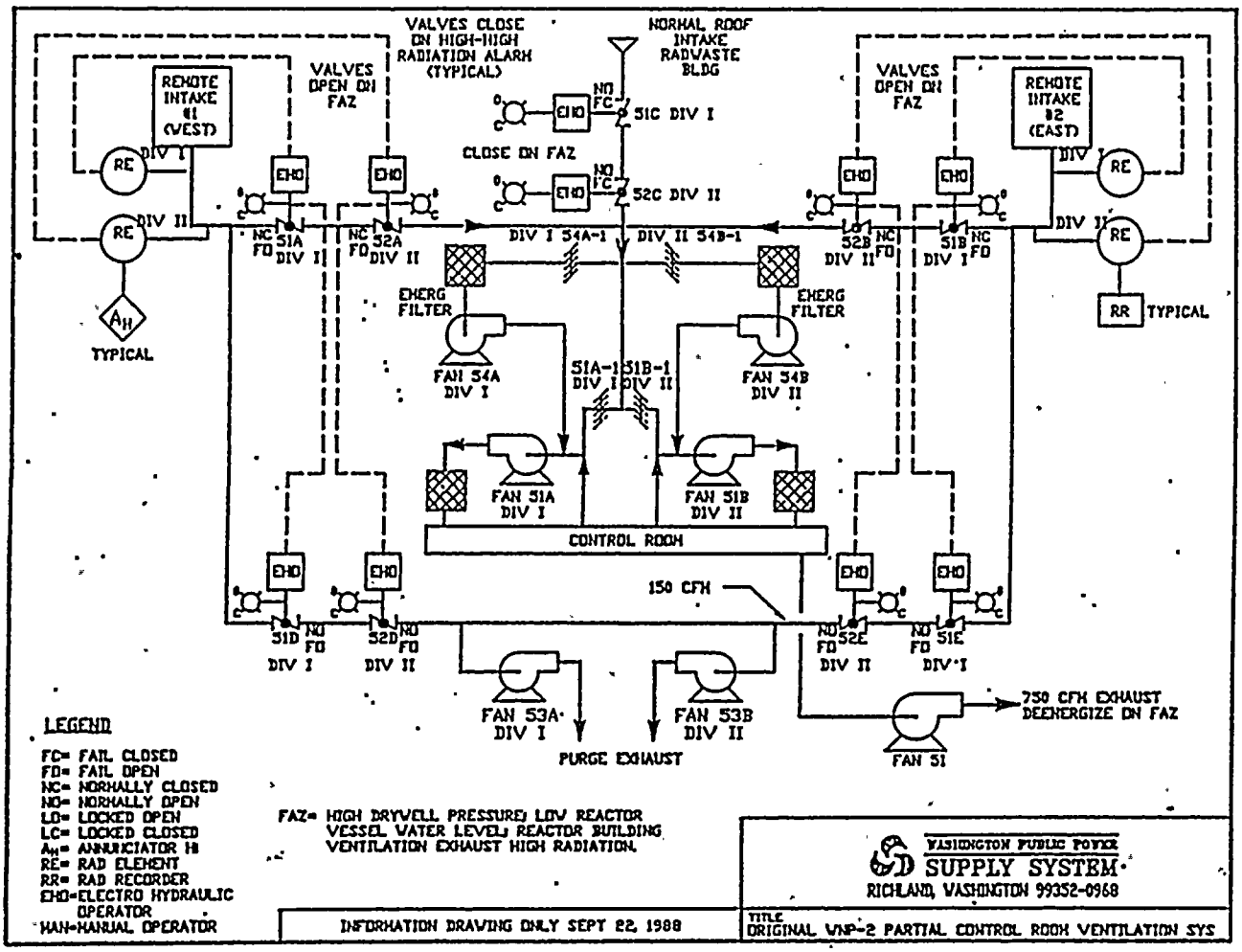


Figure 1 Pre-Event Control Room HVAC

| FACILITY NAME (1) | DOCKET NUMBER (2) | LER NUMBER (6) YEAR | SEQUENTIAL NUMBER | REVISION NUMBER | PAGE (3) |
|---|---|---|---|---|---|
| Washington Nuclear Plant - Unit 2 | 0 5 0 0 0 3 9 7 | 8 8 | — 0 3 1 | — 0 0 | 0 7 OF 0 7 |

TEXT (If more space is required, use additional NRC Form 366A's) (17)

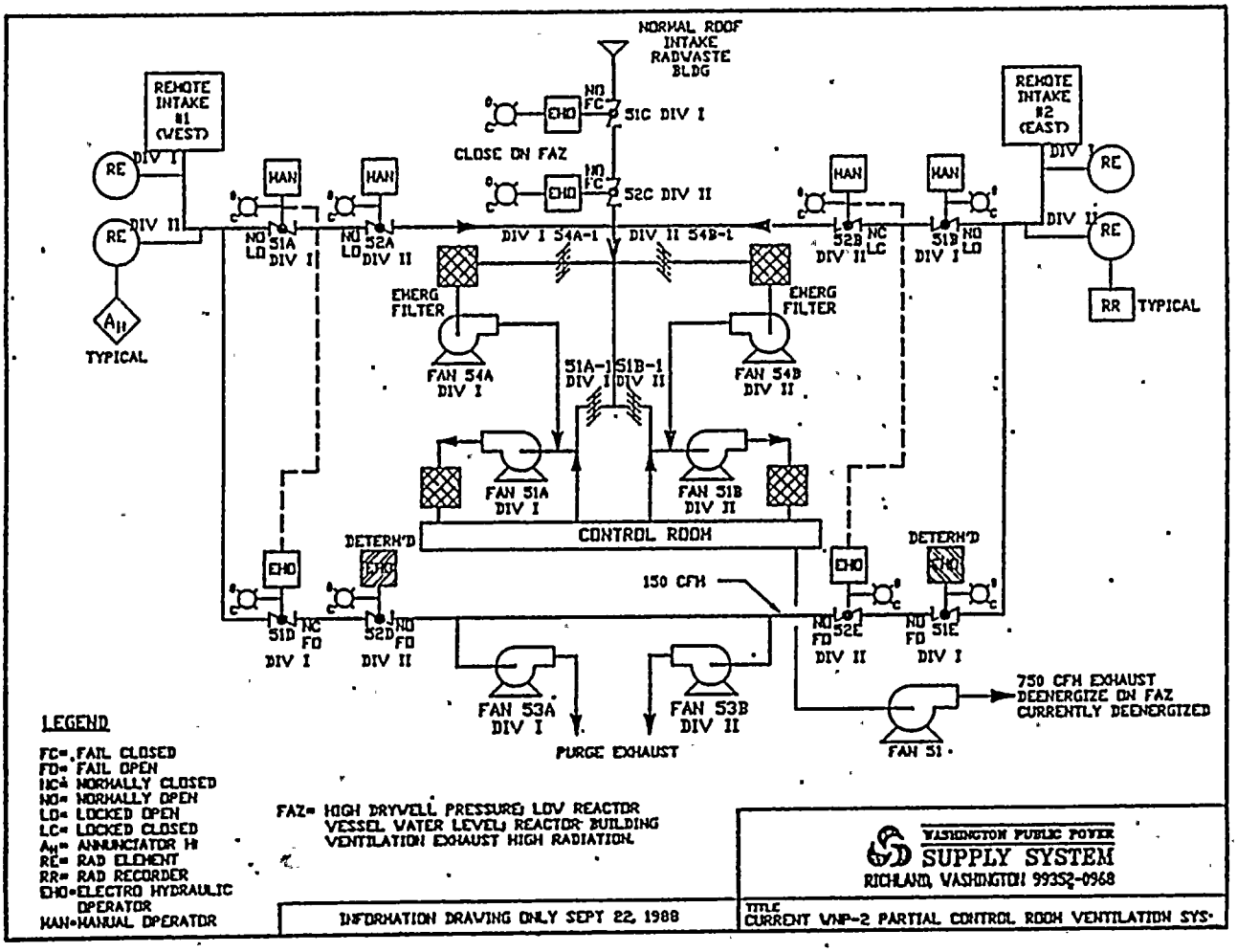


Figure 2 Post-Event Control Room HVAC

WASHINGTON PUBLIC POWER SUPPLY SYSTEM

*P.O. Box 968 • 3000 George Washington Way • Richland, Washington 99352*

Docket No. 50-397

October 3, 1988

Document Control Desk
U.S. Nuclear Regulatory Commission
Washington, D.C. 20555

Subject: NUCLEAR PLANT NO. 2
LICENSEE EVENT REPORT NO. 88-031

Dear Sir:

Transmitted herewith is Licensee Event Report No. 88-031 for the WNP-2 Plant. This report is submitted in response to the report requirements of 10CFR50.73 and discusses the items of reportability, corrective action taken, and action taken to preclude recurrence.

Very truly yours,

JW Baker

C.M. Powers (M/D 927M)
WNP-2 Plant Manager

CMP:lg

Enclosure:
Licensee Event Report No. 88-031

cc: Mr. John B. Martin, NRC - Region V
Mr. C.J. Bosted, NRC Site (M/D 901A)
INPO Records Center - Atlanta, GA
Ms. Dottie Sherman, ANI
Mr. D.L. Williams, BPA (M/D 399)

Cert No.
P 518-847-292

IE22
1/1