U. S. NUCLEAR REGULATORY COMMISSION
REGION V

EXAMINATION REPORT

Examination Report No.: 50-397/OL-88-01

Facility Licensee: Washington Nuclear Project, WNP-2

Facility Docket No.: 50-397

Facility License No.: NPF-21

Examinations administered at Washington Nuclear Project, WNP-2, Richland, Washington

Chief Examiner: Thomas R. Meadows — Date Signed: 4-15-88

Approved by: John O. Elin, Chief, Operations Section — Date Signed: 4/18/88

Summary:

Examinations were conducted March 22 through March 23, 1988. The written examination was administered to one (1) senior reactor operator (SRO) candidate and one (1) reactor operator (RO) candidate.

Both of these candidates passed their written examinations. The operating examinations were administered to two (2) SRO candidates on March 23, 1988. One (1) of these candidates passed the operating portion of the examination, and subsequently passed overall. The other SRO candidate failed the simulator portion of the examination. The RO candidate passed overall.

REPORT DETAILS

1. Examiners

Thomas Meadows, RV, Chief Examiner
Mark Sullivan, Sonalyst Inc.

2. Persons Attending the Exit Meeting:

March 24, 1988

NRC

Tom Meadows, RV, Chief Examiner
Mark Sullivan, Sonalyst Inc., Examiner

WNP-2

Chris M. Powers, Plant Manager, WNP-2
Richard Stickney, Manager, Technical Training
Mark Westergren, Supervisor, Licensing Operator Training

3. Written Examinations and Facility Review

All examinations were first retake examinations.

The written examination was administered at the licensee's EOF on March 22, 1988. At the conclusion of the examination a copy of the examination and examination key was given to Mr. Mark Westergren, of the licensee's Training Department, for review. The Chief Examiner met with Mr. Westergren on March 24, 1988 to conduct a formal examination review. The review of the examinations resulted in some facility comments. The licensee's formal comments were endorsed by the licensee Manager, Regulatory Programs and forwarded to the Region. The NRC resolutions of these comments are attached for both the SRO and RO examinations, respectively (Attachments A and B).

4. Operating Examinations

All examinations were first retake examinations.

Simulator and Oral examinations were conducted on March 23, 1988. The support from the licensee's training and simulator engineering staff was excellent.

The following are the generic problems identified in the administration of the operating examination:

(1) The reference materials provided for developing simulator scenarios have not improved since the last examination. They are not of sufficient detail and scope to prepare objective NRC scenarios. For example; the annunciator response procedures, abnormal procedures, and/or emergency procedures the operator is expected to use for a given malfunction are not adequately referenced. Additionally, the integrated plant response and expected operator actions for a given malfunction are not adequately referenced.

(2) Specific simulator fidelity problems were identified and are documented in the "Simulation Facility Fidelity Report" (Attachment C).

(3) During one simulator scenario it became evident that there is no abnormal procedure to guide the licensee's operators actions in the event of a failed bypass valve. In this case the valve was failed "as is" during startup operation.

5. Exit Meeting

At the conclusion of the site visit the examiners met with representatives of the licensee's staff to discuss the examination.

ATTACHMENT A

WNP-2, SENIOR REACTOR OPERATOR
MARCH 22, 1988 NRC EXAMINATION REVIEW

QUESTION 8.02b:

COMMENT/EVALUATION:

WNP-2 learning objectives require only the lowest and highest setpoints to be memorized -not all five (5) settings. Should require only the lowest and highest value for full credit or accept a range of ± 5 psig.

RESOLUTION: Comment accepted.

The requirement to know the licensee's technical specification limiting conditions for operations is clearly valid, especially for safety systems that could directly effect a safety limit. The K/A importance ratings referenced in this questions' answer key reflect this. However, a reasonable range of +/- 5 psig will be allowed for each response. The answer key was so modified during the formal examination review with the licensee.

QUESTION 8.04a:

COMMENT/EVALUATION:

Memorization of the eight "uncertainties" considered in the MCPR Safety Limit Analysis is not required knowledge at WNP-2 and should be deleted from this questions.

RESOLUTION: Comment accepted.

The intent of this question was to examine for the knowledge of the operational systems processes and conditions that would affect the MCPR safety limit. In this context the question is clearly valid, as indicated by the K/A importance rating referenced in the answer key. However, after further review of the question format the examiner agrees that the word "uncertainties" would confuse a candidate. This question is deleted from the examination.

ATTACHMENT B

WNP, REACTOR OPERATOR
MARCH 22, 1988 NRC EXAMINATION REVIEW

QUESTION 1.09b:

COMMENT/EVALUATION:

Incorrect math on final answer. Correct answer should be:

p1 - p2 = p

.137 - .037 = .1 dk/k not .001 dk/k

RESOLUTION: Comment accepted.

The answer key was corrected during the formal examination review with the licensee.

QUESTION 2.03c:

COMMENT/EVALUATION:

Should also accept boron as was accepted in 2.03d.

RESOLUTION: Comment not accepted.

The question is clearly valid as indicated by the K/A importance ratings and facility learning objectives identified in the answer key. It is also noted that the facility has supplied no documentation to support this comment.

QUESTION 2.04c

COMMENT/EVALUATION:

Should also accept "alternate method for SLC injection" as an acceptable response.

RESOLUTION: Comment accepted.

Commensurate with the documentation provided by the facility, the answer key is modified to accept this alternate response. The references identified in the original answer key are clearly not consistent and should be updated by the facility.

QUESTION 2.04d:

COMMENT/EVALUATION:

Both answers 1 and 2 accomplish the same purpose and should accept a variation of either answer for full credit.

RESOLUTION: Comment accepted.

Although no new documentation was supplied by the facility, the answer key and the examination is modified to accept a variation of either response for full credit. The examiner agrees to this change in order to ensure complete objectivity in grading, however, it should be noted that maximizing bottom head circulation also reduces build up in the bottom of the RPV - a distinctly different reason. The facility procedures should be up-graded to indicate this.

QUESTION 2.07d:

COMMENT/EVALUATION:

Should also accept "rods are further out of the core and require longer travel time."

RESOLUTION: Comment accepted.

Commensurate with the documentation provided by the facility, the answer key is modified to accept this alternate response. The references identified in the original answer key are clearly not consistent and should be updated by the facility.

QUESTION 2.09a:

COMMENT/EVALUATION:

Asks for two (2) additional (total of 3) functions of suppression "pool" vice chamber.

The suppression "pool" by definition does not include a free air space, and a "source of ECCS water" should be accepted for full credit. Also, the suppression pool receives and condenses steam from the SRV's.

RESOLUTION: Comment accepted.

The examiner agrees with the facility comment in that the question had intended to say "suppression chamber" vice "suppression pool". A source of ECCS water" is clearly implied in the answer key. The answer key will be modified to accept "to receive and condesne steam from the SRV's as an alternate answer. The overall point valve of the question will remain the same.

QUESTION 2.10a:

COMMENT/EVALUATION:

The correct answer is: -0.25 "WG vice 0.25 "WG

RESOLUTION: Comment accepted.

However, no change to the answer key is necessary since a complete discription, as outlined in the facilities comment, fully meets the intent of the key. Post accident conditions are clearly implied by, "=0 psig in RPV and D/W and no jet pump flow".

QUESTION 2.10e:

COMMENT/EVALUATION:

Total capacity of both SGT trains is 8000 CFM vice 4000 CFM.

RESOLUTION: Comment accepted.

The answer key was modified during the formal examination review commensurate with the comment.

QUESTION 3.02b AND c:

COMMENT/EVALUATION:

Should also accept 100/125 of scale for upscale and 3/125 of scale for downscale.

WNP-2 Systems LPRM, page 20; PPM 4.603, A8-5.6 (note the LPRM meter scale is 0 - 125 in units of "% heat flux.").

RESOLUTION: Comment not accepted.

The comment does not affect the answer key since 100/125 of scale and 3/125 of scale are clearly implied by "upscale" and "downscale," respectively.

QUESTION 3.03b:

COMMENT/EVALUATION:

Should also accept fuel zone calibration conditions for "conditions for which the...instrument is calibrated." Calibration conditions = 0 psig in RPV and D/W and no jet pump flow.

RESOLUTION: Comment accepted.

However, no change to the answer key is necessary since a complete discription, as outlined in the facilities comment, fully meets the intent of the key. Post accident conditions is clearly implied by =0 psig in RPV and D/W and no jet pump flow".

QUESTION 3.03d:

COMMENT/EVALUATION:

Should also accept "1000 psig in RPV" as the "specific reactor conditions."

RESOLUTION: Comment not accepted.

The answer key clearly states, "Operating Conditions". Since, "1,000 psig in the RPV" clearly implies "Operating Conditions", there is no need to change the answer key.

QUESTION 4.09d:

COMMENT/EVALUATION:

WNP-2 learning objectives do not require memorization of precautions, only the reason for them. Should accept 150-250° as the answer.

RESOLUTION: Comment accepted.

The question is clearly objective as indicated by the referenced K/A importance ratings. However, the examiner agrees that an acceptable range of ±50 psig should be applied to this answer. The answer key is modified, commensurate with this resolution.

ATTACHMENT C

SIMULATION FACILITY FIDELITY REPORT

Facility Licensee: WNP-2

Facility Licensee Docket No.: 50-397

Facility Licensee No.: NPF-21

Operating Tests administered at: WNP-2, Richland, Washington

Operating Tests Given On: 3/23/88

Attached to this report is a master copy of the "as run" simulator scenarios used for this examination. The specific problems and associated events are documented there in to ensure that discrepancies between the simulation facility and the reference plant performance are clearly evaluated. The simulator was evaluated as just adequate to run NRC examination scenarios. However, the examination team did note some progress towards improving simulator fidelity as outlined in the facility's Simulator Certification Program Plan.

WNP-2: SIMULATOR TRACKING — MARCH 21 - 24, 1988 EXAM

ATTACHMENT 3

SCENARIO EVENTS

Simulation Facility: WNP 2 Scenario No. 1

Examiners: _____ Candidates: _____

Initial Conditions: IC-10 61% Power 100% Rod Pattern
Core was refueled with entire new batch of fuel

EVENT	TYPE	TIME	MALF. NO	DESCRIPTION
1	[RMI] [NEI]	0	NA	Increase power to 90% Perform RCIC full flow surv.
2	[IFI]	4	10,04,0003	APRM E fails downscale
3	[IFI]	11	11,12,0003	RCIC Electrical Overspeed trips turbine
4	[IFI]	15	04,05,0107	Accumulator 26-35 high water level
5	[CFI]	19	14,01,0001 100% 14,01,0002 100% 14,01,0003 100% 14,01,0035 50%	Refuel floor high radiation due to maintenance jamming fuel grapple into fuel bundle rupturing several fuel pins
6	[CFI] [EIR]	29	10,08,0011	Both Recirc flow control valves fail open
7	[CFI]	30	15,02,0001	Gross fuel cladding failure due to rapid increase in Recirc flow with no preconditioning of new fuel
8	[IFI]	30	18,01,0003	IRM E fails downscale during scram

EVENT: PROBLEM:

(5) ALL PROCESS RADIATION MONITORS WILL NO RESPOND TO A FAILURE OR ALARM INPUT AS A PART OF AN ASSOCIATED MALFUNCTION.

(1) 40-47 LOAD STRING IS LABELED INCORRECTLY (SHOULD BE 40-57).

(7) MSIV'S STAYED OPEN DURING GROSS FUEL FAILURE.

ATTACHMENT 3

SCENARIO EVENTS

Simulation Facility: WNP 2 Scenario No. 1

Examiners: _____ Candidates: _____

Initial Conditions: Shift Turnover

The reactor is at approximately 60% power and is on the 100% rod line

Normal startup is in progress after an extended outage

Increase power to 90% and hold for engineering testing

RCIC full flow surveillance is due

During the outage the entire core was swapped out for new fuel

Equipment Out of Service

LPRMs	32-09A	18,31,0003
	16-33D	18,33,0021
	16-07A	18,31,0040
	24-41D	18,34,0029

ATTACHMENT 3

OPERATOR ACTIONS

Scenario No. 1 Event No. 1 Page 1 of 8

Brief Description: Increase reactor power with Recirc flow and perform RCIC full flow surveillance

Time	Position	Candidate Actions/Behavior
	XO	In accordance with APM 2.3.13 (Power Plant Maneuvers) Increase reactor power with Recirc flow Check Power/Flow map Inform SRO
	RO	Perform RCIC full flow surveillance
	SRO	Supervise increase in power and RCIC surveillance in accordance with procedures

ATTACHMENT 4

OPERATOR ACTIONS

Scenario No. 1 Event No. 2 Page 2 of 8

Brief Description: APRM 5 fails downscale

Panel	Location	Candidate Actions/Behavior
	RO	Acknowledge alarm Notify SRO Refer to PPM 1.603.AB-4.6 (APRM Downscale) check alarm lights and alarm readout to determine which APRM is downscale Recognize rod withdrawal block
	SRO	Assist RO as directed by the SRO
	TSO	Refer to Tech Spec T.S.L.C. and verify that there are at least 2 APRMs operable in each RTB channel Refer to Tech Spec S.T.L.C. and verify that there are at least 5 APRMs operable for Rod Blocks

ATTACHMENT

[illegible]

[illegible] Level [illegible] Page [illegible] of [illegible]

[illegible]

ATTACHMENT 4

OPERATOR ACTIONS

Scenario No. 1 Event No. 4 Page 4 of 8

Brief Description: Accumulator 26-33 High Water Level

Time	Position	Candidate Actions/Behavior
	RO	Acknowledges alarm Inform SRO of malfunction Refer to PPM 4.603.A7-6.7(Rod Accumulator Trouble) determine trouble is high water level Refer to PPM 2.1.1 (Control Rod Drive System) to restore HCU to normal operation
	SRO	Assist RO as directed by the SRO
	SRO	Direct RO to perform steps of PPM 2.1.1 to restore the HCU to normal

[illegible]

[illegible]

[illegible]

ATTACHMENT 4

OPERATOR ACTIONS

Scenario No. 1 Event No. 6 Page 6 of 8

Brief Description: Recirc Flow Control Valves fail open

Time	Position	Candidate Actions/Behavior
	RO	Identify Power increase caused by FCVs opening Report to SRO Attempt individual loop manual control Control Recirc loop flow as directed by the SRO Carry out PPM 3.3.1 (Reactor Scram) verify all rods in verify APRMs at zero initiate manual scram place Mode switch in Shutdown carry out subsequent actions of the procedure
	BOP	Assist RO as directed by the SRO
	SRO	Directs RO to carry out scram procedure Verifies that the steps of the scram have been carried out Directs efforts to regain control of the Recirc valves

ATTACHMENT 4

OPERATOR ACTIONS

Scenario No. 1 Event No. 7 Page 7 of 8

Brief Description: Gross fuel cladding failure due to rapid increase in power with no preconditioning of the fuel

Time	Position	Candidate Actions/Behavior
	RO	Acknowledges Alarms Notifies SRO of increasing pressure Carries out EOP actions as directed by the SRO
	BOP	Acknowledges Alarms Notifies SRO of containment isolation Carries out actions of EOP as directed by the SRO.
	SRO	Enter EOP 5.1.1 (Level Control) when MSIVs isolate Enter EOP 5.1.2 (Pressure Control) when MSIVs isolate Enter EOP 5.2.1 (Suppression Pool Temp. if Supp. Pool Temp 90 deg F Enter EOP 5.2.2 (Drywell Temp Control) EOP 5.2.3 (Pri Cont Press Control) EOP 5.2.4 (Supp. Pool Level Control if EOP 5.2.1 is entered

ATTACHMENT 4

OPERATOR ACTIONS

Scenario No. 1 Event No. 9 Page 8 of 8

Brief Description: IRM C fails downscale during scram

Time	Position	Candidate Actions/Behavior
	RO	Recognize IRM C failure Report to SRO Refer to PPM 4.603.A7-4.5 (IRM Downscale) if directed by the SRO, bypass IRM C
	SOP	Assist the RO as directed by the SRO
	SRO	Check Tech Spec 3.3.1 (RPS Instrumentation) and Tech Spec 3.6.1 (Rod Block Instrumentation), to verify that the failed IRM does not put the plant in an LCO Direct RO to bypass the IRM Direct I&C to investigate failure

ATTACHMENT 3

SCENARIO EVENTS

Simulation Facility: WNP 2 Scenario No. 2

Examiners: Candidates:

Initial Conditions: IC-08 but drive in several rods
Reactor power is approximately 15%
Mode switch is in RUN, Turbine is
darned up and ready to synchronize
initial turbine temp 250 deg. F

EVENT	TIME	MALF. NO	DESCRIPTION
0	0	03,03,0001	#1 Bypass valve fails in the full open position
1 (NEW CREW)	0	NA	Sychronize the Main Generator and increase Reactor Power in conjunction with Synchronizing and loading the Generator
2 (CRT)	5	04,17,.....	Reed switch fails to close on the rod being withdrawn
3	[illegible]	[illegible]	#1 Bypass valve does not respond to DEH and sticks in the full open position during Generator load increase
(4) (LIFT CREW)	[illegible]	[illegible],12,0001	CRD flow transmitter fails low causing flow control valve to drive full open and rods start drifting due to high cooling water pressure
(5)	[illegible]	[illegible] 02,0[illegible]	Containment level monitor fails [illegible]

EVENT: PROBLEM:

(4) ROD DRIFT CAPABILITY IS NOT INCORPORATED WITH THIS MALFUNCTION. THIS MAKES FIDELITY MARGINAL-HARD TO PROPERLY EVALUATE CANDIDATES PERFORMANCE.

(5) THIS MALFUNCTION DOES NOT WORK. ONLY ARM'S ARE PROPERLY MODELED.

ATTACHMENT 3

SCENARIO EVENTS

Simulation Facility: WNP 2 Scenario No. 2

Examiners: _____ Candidates: _____

Initial Conditions: Shift Turnover

The reactor is at approximately 15% power during a cold Xenon free startup

The Mode Switch is in RUN

The turbine is warmed up and ready to synchronize Initial Turbine temperature was 250 deg F

Synchronize the Main Generator to the grid as soon as possible

Increase Reactor Power to 30% and hold there for Testing

Equipment Out of Service

LPRMs	36-32B	18,32,0025
	24-31C	18,33,0028
	32-23L	18,32,0009
	17-17A	18,31,0007

ATTACHMENT 4

OPERATOR ACTIONS

[illegible] Event No. 1 Page 1 of 6

[illegible] Increase Reactor Power and synchronize Main Generator to the grid

[illegible] Initiating [illegible] Indication Acknowledgment [illegible]

[illegible] [illegible]

[illegible] [illegible]

[illegible] [illegible]

ATTACHMENT 4

OPERATOR ACTIONS

Scenario No. 2 Event No. 2 Page 2 of 5

Brief Description: Reed Switch fails to close on rod currently being withdrawn

Time	Position	Candidate Actions/Behavior
	30	Recognize loss of position indication following rod movement and report to SRO
		Determine Rod Position per PPM 4.1.1.6 (Loss of Control Rod Position Indication)
		Recognize that rod must be at alternate Withdrawal limit for proper RWM operation
		As directed by the SRO, move the rod to a position with an operable reed switch
	300	Continue with Generator synchronization
	330	Direct RO actions per PPM 4.1.1.6 insure compliance with Tech Spec 3.1.3.7
		direct operator to determine rod position using an OD-7
		direct operator to move rod to a position with an operable reed switch
		declare the rod inop
		Direct investigation of failure

ATTACHMENT 4

OPERATOR ACTIONS

Scenario No. 2 Event No. 3 Page 3 of 3

Brief Description: #1 Bypass valve sticks in the full open position during Generator load increase (May be repaired if necessary for RO to perform sufficient reactivity manipulation)

Time	Position	Candidate Actions/Behavior
	RO	Monitor Primary Plant Parameters
	RO	Recognize that the Governor and Bypass valves are not responding per FPM 2.3.2.F (Main Turbine Generator) Determine that the #1 Bypass valve is stuck open Enter SRO of malfunction If the system is repaired, resume loading of the Generator
	RO	Check Tech Spec 3.7.9 If Turbine Bypass System is inoperable, reactor power must be less than 15% Perform investigation to repair valve If the valve is repaired, [illegible] to continue loading the generator

ATTACHMENT 4

OPERATOR ACTIONS

Scenario No. 2 Event No. 4 Page 4 of 5

Brief Description: CRD Flow Transmitter Fails Low causing the Flow control valve to open, cooling water header pressure will increase causing rods to drift into the core

Time	Position	Candidate Actions/Behavior
	RO	Per PPM 4.603.A7-5.7 (Rod Drift) attempt to adjust cooling water dp to stop rods from drifting Perform steps of PPM 4.1.1.1 (Rod Drift) Inform SRO of rod drift and transmitter failure
	EO	Assist RO as directed by the SRO
	SRO	Direct RO to perform actions of PPM 4.603.A7-5.7 and PPM 4.1.1.1 Notify RE to evaluate new rod pattern Direct repairs of flow transmitter

ATTACHMENT 4

OPERATOR ACTIONS

Scenario No. 4 Event No. 2 Page 5 of 5

Initial Conditions: Containment oxygen monitor fails high

Time	Operator Action	Indications/Behavior
[illegible]	[illegible] Primary Plant Parameters [illegible]	
[illegible]	[illegible] alarm [illegible] of alarm [illegible] of PPM [illegible] [illegible] (oxygen level high)	
	[illegible]	
	[illegible]	
	[illegible]	

RECEIVED
1983 MAR 11 A 10: 18

ATTACHMENT 3

SCENARIO EVENTS

Simulation Facility: WNP 2 Scenario No. 3

Examiners: _____ Candidates: _____

Initial Conditions: IC-12 100% Power, Equilibrium Xenon
HPCS is inoperable, High winds
40 mph with gusts of up to 30 mph

EVENT	TIME	MALF. NO	DESCRIPTION
0	0	12,03,0001 03,04,0001	High Winds 40 mph Condenser Reject Valve failed as is.
1 [NE]	0	NA	Swap CRD pumps
2 [OF] [RM]	7	02,01,0002	Circ Water Pump trip due to faulty 86 device restore in 15 minutes
(3) [IF]	12	18,32,0037.	LPRM ~~02-47D~~ 24-29B Fails Downscale
(4) [IF]	15	03,05,0001	Condenser Makeup valve fails closed. Restore when SRO directs manual control
(5) [NE]	22	NA	I&C calls SRO to inform that the Circ water pump may be restarted Restart Circ Water Pump
6	30	12.03,0001	Increase wind speed to 90 mph Security calls in a tornado sighting
7 [TR] [OF]	37	06,18,0001 06,01,0002	Loss of Offsite power with Failure of Diesel Generator 2 to start

(3) BACK-PANEL LABELING INCORRECT FOR LPRM STRING 24-29B (SHOULD BE 24-49B).

(4) CONDENSATE FILTER DEMINERALIZER EFFLUENT CONDUCTIVITY READS HIGHER THAN THE HOTWELL CONDUCTIVITY.

(5) SPURIOUS RR PUMP MOTOR TEMPERATURE ALARMS KEPT COMING IN DURING THIS EVENT.

ATTACHMENT 3

SCENARIO EVENTS

Simulation Facility: ___SNP 2___ Scenario No. __3__

Examiners: _____ Candidates: _____

_____ _____

_____ _____

Initial Conditions: _____ Shift Turnover_____

The reactor is at 100% power, equilibrium xenon

Winds are currently 40 mph with gusts of up to 80 mph. Winds are expected to get stronger

SRO pumps are due to be swapped (normal equipment rotation)

Equipment Out of Service

HPCS has been out of service for the last 3 days and is expected to be returned to service in 2 days. LCO clocks 14 days of operation.

Outside reject valve is locked partially open due to maintenance being performed on the valve operator. Can be operated locally by hand.

[illegible]	[illegible]	18,32,[illegible]
[illegible]	[illegible]	18,31,0005
[illegible]	[illegible]	18,32,0020
[illegible]	[illegible]	18,32,0019
[illegible]	[illegible]	18,33,0027
[illegible]	[illegible]	18,32,0019
[illegible]	[illegible]	18,31,0007

ATTACHMENT 4

OPERATOR ACTIONS

Scenario No. 3 Event No. 1 Page 1 of 8

Brief Description: Swap CRD Pumps as part of normal equipment rotation

Time	Position	Candidate Actions/Behavior
	RO	In accordance with PPM 2.1.1.5.E Place Flow Control Valve in Manual Start Idle Pump Trip running pump Adjust Flow Control valve to obtain flow between 37 to 60 gpm Null Flow Control Valve Controller Transfer Controller to AUTO Have Equipment Operator check pump locally
	PEO	Assist RO as directed by the SRO
	SRO	Direct RO to swap running CRD pumps per PPM 2.1.1 (Control Rod Drive System)

ATTACHMENT 2

OPERATOR ACTIONS

Scenario No. 3 Event No. 2 Page 2 of 3

Brief Description: Circulating Water Pump "B" trips due to a faulty 86 device (differential current relay)

Time	Position	Immediate Actions/Behavior
	RO	As directed by the SRO Reduce reactor power IAW FPM 4.3.12 (Power Plant Maneuvers) to maintain reactor power within the heat capacity of the main condenser
	SRO	IAW FPM 4.40C.A4-1.3 (Circ Water U Trip) and FPM 4.60C.A4-5.b (CW Pump 3 Diff Current) Verify that Circ Water Discharge Valve closes Refer to FPM 4.4.1.1 (CW System Failure) Assist RO with power reduction as directed by the SRO
	PO	Assist RO to reduce power per FPM 4.3.12 (Power Plant Maneuvers) Verify that ADP carries out immediate actions of FPM 4.40C.A4-1.3 and FPM 4.60C.A4-5.b Start Investigation of failure

ATTACHMENT 4

OPERATOR ACTIONS

Scenario No. 3 Event No. 3 Page 3 of 8

Brief Description: LPRM ~~22-42B~~ 24-29B Fails Downscale which causes APRM "A" to be inoperable due to less than 2 inputs per level

Time	Position	Candidate Actions/Behavior
	RO	Inform SRO of alarm When directed by the SRO bypass the "A" APRM
	BOP	IAW PPM 4.603.A8-5.6 (LPRM Downscale) identify the downscale LPRM @ panel 600 verify the readout of the LPRM Bypass the LPRM Inform the SRO of actions taken
	SRO	Identify less than 2 LPRMs on level B for APRM A Declare APRM A inoperable per table 3.3.1-1 of Tech Specs Direct RO to bypass APRM A Verify that 2 APRMs in RPS channel A meet minimum requirements of table 3.3.1-1 of Tech Specs Verify that 5 APRMs total meet minimum requirements of table 3.3.6-1 of Tech Specs (Rod Blocks)

ATTACHMENT 4

OPERATOR ACTIONS

Scenario No. 3 Event No. 5 Page 5 of 9

Brief Description: Control room receives a call that the Circ Water Pump "86" device has been replaced and that the Circ water pump may be returned to service.

Time	Position	Candidate Actions/Behavior
	RO	Monitor Primary Plant Parameters Assist BOP as directed by the SRO
	BOP	Restart 6 Circ Water Pump per PPM 2.6.1 Place control switch in START Verify current meter pegs high then returns to 700 amps in 10 to 15 secs verify discharge valve opens verify eductor suction and supply valves close Report to SRO
	SRO	Direct BOP to restart Circ Water pump per PPM 2.6.1 (Circulating Water and Cooling Towers)

ATTACHMENT 4

OPERATOR ACTIONS

Scenario No. 3 Event No. 4 Page 4 of 8

Brief Description: makeup valve COND-LCV-1B control failure (closed)

Time	Position	Candidate Actions/Behavior
	CRO	Monitors Reactor Water level IAW PRM 4.840.A3-7.4 (Main Condenser Hotwell Level Low)
	CRO	Acknowledges alarm Notifies SRO Refers to PRM 4.840 A3-7.4 verifies low level Refers to PRM 4.6.3.3 (Main Condenser Low Water Level)
	SRO	Directs Equipment Operator to take manual control of the valve and initiate maintenance to investigate valve failure

ATTACHMENT 4

OPERATOR ACTIONS

Scenario No. 3 Event No. 6 Page 6 of 8

Brief Description: Winds increase to 90 mph, Security calls control room to inform of a Tornado sighted South West of Richland

Time	Position	Anticipate Actions/Behavior
	CO	Monitor Primary Plant Parameters
	NOP	Assist RO as directed by the SRO
	SRO	Refer to EPIP 13.3.2 (High Winds/ Tornado) Write down pertinent data about weather and caller Notify Plant Director of high winds and the status of the plant Refer to EPIP 3.1.1 (Classifying the Emergency) Declare "Unusual event" due to high winds sustained above 90 mph or due to Tornado sighted from the facility.

ATTACHMENT 4

OPERATOR ACTIONS

Scenario No. 3 Event No. 7 Page 7 of 8

Brief Description: Loss of Offsite Power with Diesel Generator #2 Failing to start

Time	Position	Candidate Actions/Behavior
	RO	Acknowledges Alarms Notifies SRO of scram performs steps of the scram procedure verifies all rods in verifies APRMs reading 0 initiates manual scram places mode switch in shutdown carries out subsequent steps of the procedure Refers to PPM 4.7.1.10 (Loss of Offsite Power) starts CRD pump notifies load dispatcher Verifies RCIC initiation
	RO	Acknowledges Alarms Identifies Loss of Offsite Power Notifies SRO Refers to PPM 4.7.1.10 verifies automatic actions MSIV closure SRVs cycle to maintain press. Turbine Generator trips 4KV and 6.9KV breakers trip Emerg. Bearing Oil Pump starts Diesels start Recognizes DG2 failure to start Reports to SRO Refers to PPM 4.800.DG-2.1 (DG2 Fail to Start) investigate and correct cause of failure Break condenser vacuum Restore power to TR-5 or TR-6 energize Bd 1,2, and 3 Restart RPS MG sets

ATTACHMENT 4

OPERATOR ACTIONS

Scenario No. 3 Event No. 7 Page 6 of 8

Brief Description: Loss of Offsite Power with Diesel Generator #2 Failing to start (continued)

Time	Position	Candidate Actions/Behavior
	SRO	Directs operator actions per PPM 4.7.1.10 (Loss of Offsite Power) PPM 4.800.05-7.1 (DG2 Fail to Start) PPM 4.2.1 (Scram) Refers to PPM 13.1.1 (Classifying the Emergency) Still maintains "Unusual Event" but may upgrade to "Alert" due to 3 of 4 conditions present simultaneously: High Wind Tornado Loss of Offsite Power Enter 2OP 5.2.1 (Level Control) if level is >+13" Enter 2OP 5.1.1 (Pressure Control) if pressure > 1037 psig Enter 2OP 5.3.1 (Suppression Pool Temp) if Supp. Pool Temp >90 deg F Enter 2OP 5.2.2 (Drywell Temp Control) 2OP 5.2.3 (Drl Cont Press. Control) 2OP 5.2.1 (Supp. Pool Level Cont) if 2OP 5.2.1 is entered

MASTER KEY

KEY

U.S. NUCLEAR REGULATORY COMMISSION

SENIOR REACTOR OPERATOR LICENSE EXAMINATION

Facility: WNP-2
Reactor Type: BWR-GE5
Date Administered: March 22, 1988
Examiner: THOMAS R. MEADOWS, RV
Candidate: _____

INSTRUCTIONS TO CANDIDATE

Use separate paper for the answers. Write answers on one side only. Staple question sheet on top of the answer sheets. Points for each question are indicated in parentheses after the question. The passing grade requires at least 70% in each category and a final grade of at least 80%. Examination papers will be picked up six (6) hours after the examination starts.

Category Value	% of Total	Candidate's Score	% of Category Value	Category
_____	_____	_____	_____	5. Theory of Nuclear Power Plant Operation, Fluids, and Thermodynamics
_____	_____	_____	_____	6. Plant Systems Design, Control and Instrumentation
_____	_____	_____	_____	7. Procedures - Normal, Abnormal, Emergency, and Radiological Control
24 ~~25~~	24 ~~25~~	_____	_____	8. Administrative Procedures, Conditions, and Limitations
24 ~~25~~				TOTALS
		Final Grade		

All work done on this examination is my own, I have neither given nor received aid.

_____
Candidate's Signature

ATTACHMENT 1 (continued)

Enclosure 2

REQUIREMENTS FOR ADMINISTRATION OF WRITTEN EXAMINATIONS

1. A single room shall be provided for completing the written examination. The location of this room and supporting restroom facilities shall be such as to prevent contact with all other facility and/or contractor personnel during the duration of the written examination. If necessary, the facility should make arrangements for the use of a suitable room at a local school, motel, or other building. Obtaining this room is the responsibility of the licensee.

2. Minimum spacing is required to ensure examination integrity as determined by the chief examiner. Minimum spacing should be one candidate per table, with a 3-ft space between tables. No wall charts, models, and/or other training materials shall be present in the examination room.

3. Suitable arrangements shall be made by the facility if the candidates are to have lunch, coffee, or other refreshments. These arrangements shall comply with Item 1 above. These arrangements shall be reviewed by the examiner and/or proctor.

4. The facility staff shall be provided a copy of the written examination and answer key after the last candidate has completed and handed in his written examination. The facility staff shall then have five working days to provide formal written comments with supporting documentation on the examination and answer key to the chief examiner or to the regional office section chief.

5. The facility licensee shall provide pads of 8-1/2 by 11 in. lined paper in unopened packages for each candidate's use in completing the examination. The examiner shall distribute these pads to the candidates. All reference material needed to complete the examination shall be furnished by the examiner. Candidates can bring pens, pencils, calculators, or slide rules into the examination room, and no other equipment or reference material shall be allowed.

6. Only black ink or dark pencils should be used for writing answers to questions.

NRC RULES AND GUIDELINES FOR LICENSE EXAMINATIONS

During the administration of this examination the following rules apply:

1. Cheating on the examination means an automatic denial of your application and could result in more severe penalties.

2. Restroom trips are to be limited and only one candidate at a time may leave. You must avoid all contacts with anyone outside the examination room to avoid even the appearance or possibility of cheating.

3. Use black ink or dark pencil only to facilitate legible reproductions.

4. Print your name in the blank provided on the cover sheet of the examination.

5. Fill in the date on the cover sheet of the examination (if necessary).

6. Use only the paper provided for answers.

7. Print your name in the upper right-hand corner of the first page of each section of the answer sheet.

8. Consecutively number each answer sheet, write "End of Category __" as appropriate, start each category on a new page, write only one side of the paper, and write "Last Page" on the last answer sheet.

9. Number each answer as to category and number, for example, 1.4, 6.3.

10. Skip at least three lines between each answer.

11. Separate answer sheets from pad and place finished answer sheets face down on your desk or table.

12. Use abbreviations only if they are commonly used in facility literature.

13. The point value for each question is indicated in parentheses after the question and can be used as a guide for the depth of answer required.

14. Show all calculations, methods, or assumptions used to obtain an answer to mathematical problems whether indicated in the question or not.

15. Partial credit may be given. Therefore, ANSWER ALL PARTS OF THE QUESTION AND DO NOT LEAVE ANY ANSWER BLANK.

16. If parts of the examination are not clear as to intent, ask questions of the examiner only.

17. You must sign the statement on the cover sheet that indicates that the work is your own and you have not received or been given assistance in completing the examination. This must be done after the examination has been completed.

18. When you complete your examination, you shall:

a. Assemble your examination as follows:

(1) Exam questions on top.

(2) Exam aids - figures, tables, etc.

(3) Answer pages including figures which are a part of the answer.

b. Turn in your copy of the examination and all pages used to answer the examination questions.

c. Turn in all scrap paper and the balance of the paper that you did not use for answering the questions.

d. Leave the examination area, as defined by the examiner. If after leaving, you are found in this area while the examination is still in progress, your license may be denied or revoked.

ATTACHMENT 1 (Continued)

Enclosure 3

Requirements for Facility Review of Written Examination

1. There shall be no review of the written examination by the facility staff before or during the administration of the examination. Following the administration of the written examination, the facility staff shall be provided a marked-up copy of the examination and the answer key.

2. The facility will have five (5) working days from the day of the written examination is given to provide formal comment submittal. The submittal will be made to the responsible Regional Office by the highest level of corporate management for plant operations, e.g., Vice President for Nuclear Operations. A copy of the submittal will beforwarded to the chief examiner, as appropriate. Comments not submitted within five (5) working days will be considered for inclusion in the grading process on a case by case basis by the Regional Office section leader. Should the comment submittal deadline not be met, a long delay for finalization of the examination results may occur.

3. The following format should be adhered to for submittal of specific comments:

   a. Listing of NRC Question, answer and reference.

   b. Facility comment & Evaluation

   c. Supporting documentation

   NOTES:
   1. No change to the examination will be made without submittal of complete, current, and approved reference material.

   2. Comments made without a concise facility recommendation will not be addressed.

EQUATION SHEET

$f = ma$

$w = mg$

$E = mC^2$

$KE = \frac{1}{2}mv^2$

$PE = mgh$

$W = \nu\Delta P$

$\Delta E = 931\Delta m$

$\dot{Q} = \dot{m}C_p\Delta T$

$\dot{Q} = UA\Delta T$

$Pwr = W_f\,\dot{m}$

$P = P_o\,10^{SUR(t)}$

$P = P_o\,e^{t/T}$

$SUR = 26.06/T$

$T = 1.44\ DT$

$SUR = 26\left(\frac{\lambda_{eff}\rho}{\bar{\beta} - \rho}\right)$

$T = (\ell^*/\rho) + [(\bar{\beta} - \rho)/\lambda_{eff}\rho]$

$T = \ell^*/(\rho - \bar{\beta})$

$T = (\bar{\beta} - \rho)/\lambda_{eff}\rho$

$\rho = (K_{eff} - 1)/K_{eff} = \Delta K_{eff}/K_{eff}$

$\rho = [\ell^*/TK_{eff}] + [\bar{\beta}/(1 + \lambda_{eff}T)]$

$P = \Sigma\phi V/(3 \times 10^{10})$

$\Sigma = N\sigma$

$v = s/t$

$s = v_o t + \frac{1}{2}at^2$

$a = (v_f - v_o)/t$

$v_f = v_o + at$

$\omega = \theta/t$

Cycle efficiency $= \frac{\text{Net Work (out)}}{\text{Energy (in)}}$

$A = \lambda N \qquad A = A_o e^{-\lambda t}$

$\lambda = \ln 2/t_{\frac{1}{2}} = 0.693/t_{\frac{1}{2}}$

$t_{\frac{1}{2}}(eff) = \frac{(t_{\frac{1}{2}})(t_b)}{(t_{\frac{1}{2}} + t_b)}$

$I = I_o e^{-\Sigma x}$

$I = I_o e^{-\mu x}$

$I = I_o\,10^{-x/TVL}$

$TVL = 1.3/\mu$

$HVL = 0.693/\mu$

$SCR = S/(1 - K_{eff})$

$CR_x = S/(1 - K_{effx})$

$CR_1(1 - K_{eff})_1 = CR_2(1 - K_{eff})_2$

$M = 1/(1 - K_{eff}) = CR_1/CR_0$

$M = (1 - K_{eff})_0/(1 - K_{eff})_1$

$SDM = (1 - K_{eff})/K_{eff} \approx 1 - K_{eff}$

$\ell^* = 1 \times 10^{-5}$ seconds

$\lambda_{eff} = 0.1$ seconds^{-1}

$I_1 d_1 = I_2 d_2$

$I_1 d_1^2 = I_2 d_2^2$

$R/hr = (0.5\ CE)/d^2$ (meters)

$R/hr = 6\ CE/d^2$ (feet)

WATER PARAMETERS

1 gal. = 8.345 lbm

1 gal. = 3.78 liters

1 ft^3 = 7.48 gal.

Density = 62.4 lbm/ft^3

Density = 1 gm/cm^3

Heat of vaporization = 970 Btu/lbm

Heat of fusion = 144 Btu/lbm

1 Atm = 14.7 psi = 29.9 in. Hg.

1 ft. H_2O = 0.4335 lbf/in^2

MISCELLANEOUS CONVERSIONS

1 Curie = 3.7×10^{10} dps

1 kg = 2.21 lbm

1 hp = 2.54×10^3 BTU/hr

1 Mw = 3.41×10^6 Btu/hr

1 Btu = 778 ft-lbf

1 inch = 2.54 cm

$^oF = 9/5\,^oC + 32$

$^oC = 5/9\,(^oF - 32)$

SECTION 8

Administrative Procedures, Conditions and Limitations

*QUESTION
8.01 (1.75)

The design LHGR LCO differs for GE 8x8 fuel and ANF 8x8 reload fuel types. The operator must use attached Figure 3.2.4-1 to determine the LHGR LCO for ANF 8x8 reload fuel (the GE fuel has a fixed value). In Operational Condition 1 with thermal power greater than 50% of rated:

a. What is the Limiting Condition for Operation (LCO) for the Linear Heat Generation Rate of GE fuel (kW/ft) (0.5)

b. Which RCS fission product barrier is protected by the LHGR LCO? (0.25)

c. What is the computer language term used to specifically monitor LHGR on the control room core data print out? (0.5)

d. What is the "Permissible Region of Operation" for ANF 8x8 Reload Fuel (select region A or B on attached Figure 3.2.4-1)? (0.5)

*ANSWER
8.01 (1.75)

a. 13.4 kW/ft (+/- .1 KW/FT.) (0.5)

b. (fuel) cladding ((0.25)

c. (CM)FLPD (MFLPD)
("core maximum fraction of limiting power density") (0.5)

d. A (0.5)

*REFERENCE
WNP-2 Technical Specification 3/4.2.4 (pp. 3/4 2-9);
Mitigating Reactor Core Damage (GP) (pp. 3-43 through 3-45);
WNP-2 Technical Specifications Learning Objective #1 and #3;
K/A 295000G003 (System Wide Generics); Importance Rating **4.2**
K/A 295000G004 (System Wide Generics); Importance Rating **4.1**

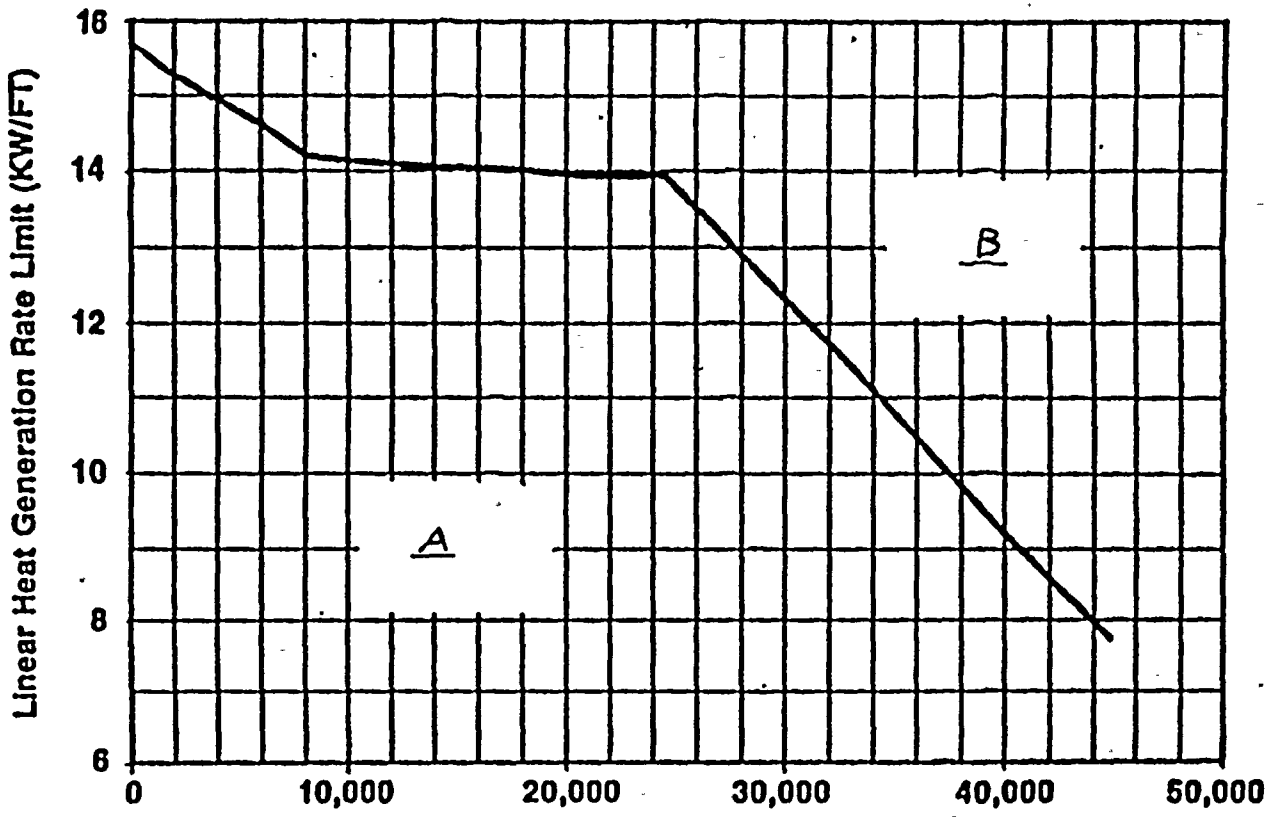

EXP	LHGR
0	15.62
510	15.621
2,580	15.10
5,230	14.71
7,940	14.19
10,470	14.13
13,220	14.06
15,990	14.06
18,708	14.00
21,590	13.93
24,420	13.93
27,280	13.08
30,150	12.24
33,050	11.40
35,960	10.47
38,900	9.55
41,830	8.65
44,760	7.77

ANF 8x8 Reload Fuel
Linear Heat Generation Rate (LHGR) Limit
Versus Average Planar Exposure

Figure 3.2.4-1

QUESTION 8.01

- KEY -

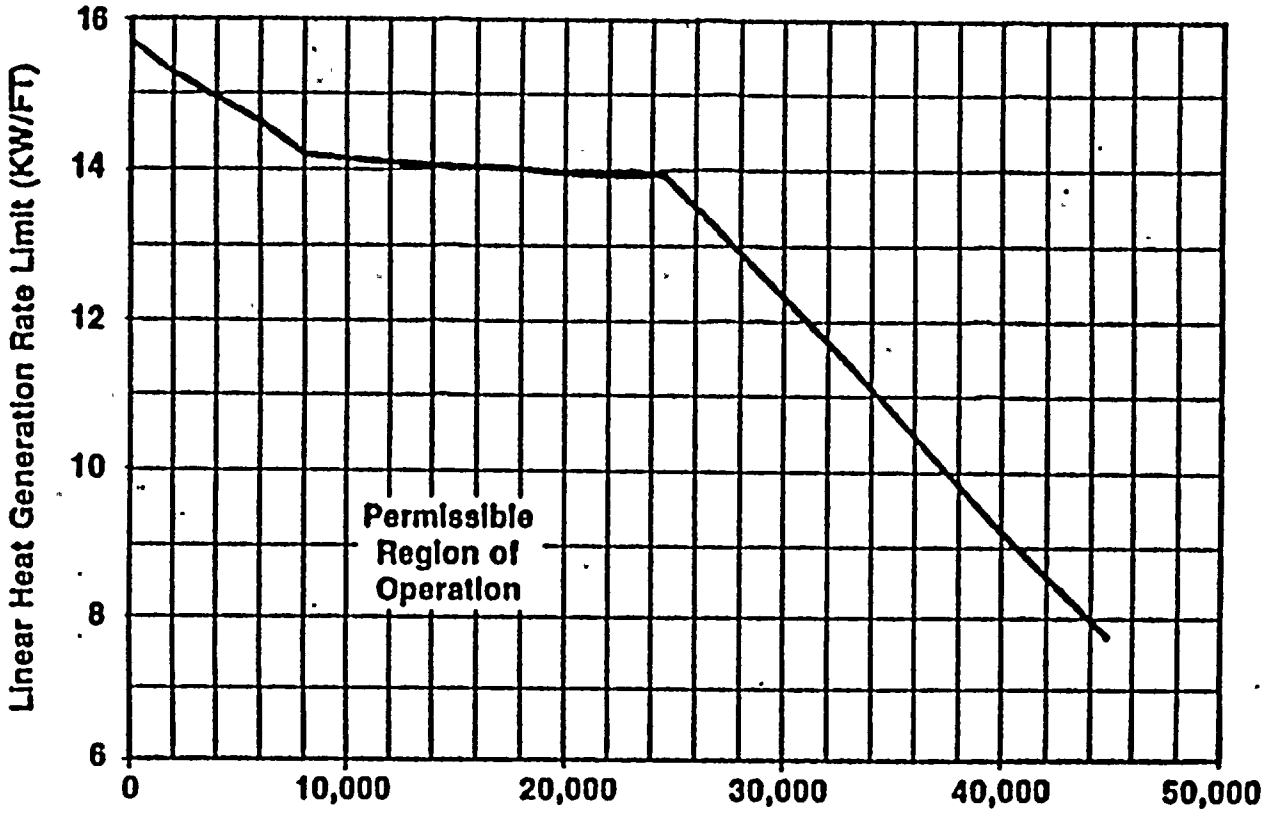

EXP	LHGR
0	15.62
510	15.621
2,580	15.10
5,230	14.71
7,940	14.19
10,470	14.13
13,220	14.06
15,990	14.06
18,708	14.00
21,590	13.93
24,420	13.93
27,280	13.08
30,150	12.24
33,050	11.40
35,960	10.47
38,900	9.55
41,830	8.65
44,760	7.77

Average Planar Exposure (MWD/MT)

ANF 8x8 Reload Fuel

Linear Heat Generation Rate (LHGR) Limit
Versus Average Planar Exposure

Figure 3.2.4-1

QUESTION 8.01

*QUESTION
8.02 (2.5)

The safety valve capacity is designed to limit the primary system pressure in accordance with the requirements of the ASME Boiler and Pressure Vessel Code -"such that the lowest valve setpoint is at or below design pressure, and the highest valve setpoint is set so that total accumulated pressure does not exceed 110% of the design RCS pressure". There are eighteen(18) safety/relief valves (SRV's), arranged in five(5) sets. For OPERATIONAL CONDITIONS 1,2 and 3, Technical Specifications LCO 3.4.2 identifies five(5) code safety lift setpoints for these five(5) sets of SRV's:

a. What is the RCS pressure Safety Limit (in PSIG)? (0.5)

b. What are the five(5) code safety valve LCO function lift settings (in PSIG)? (0.25 pts each) (1.25)

c. What must the Reactor Operator do within two(2) minutes if a stuck open safety relief valve cannot be closed? (0.75)

*ANSWER
8.02 (2.5)

a. 1325 psig (+/- 1 psig) (0.5)

b. (0.25 pts each) (1.25)

1. (2 S/R valves at) 1150 psig (+/- 5 psig)
2. (4 S/R valves at) 1175 psig (+/- 5 psig)
3. (4 S/R valves at) 1185 psig (+/- 5 psig)
4. (4 S/R valves at) 1195 psig (+/- 5 psig)
5. (4 S/R valves at) 1205 psig (+/- 5 psig)

c. Place the reactor mode switch in the SHUTDOWN position. (0.75)

*REFERENCE
WNP-2 Technical Specifications 2.1 (pp. 2-1), 3/4.4.2 (pp. 3/4 4-7); and Bases 3/4.4 (pp. 3/4 4-1);
WNP-2 Technical Specifications Learning Objectives #1,#2, and #3;
K/A 295000G003 (System Wide Generics); Importance Rating **4.2**
K/A 295000G004 (System Wide Generics); Importance Rating **4.1**

*QUESTION
8.03 (1.5)

The code Safety/Relief valve FSAR sizing evaluation assumes credit for operation of the Reactor Protection System (a SCRAM) when the reactor is tripped by a "direct scram signal" or neutron flux signal. Each "direct scram signal" incorporates an instrument switch associated with a specific trip system component. Technical Specification bases 3/4.4.2 (Safety/Relief valves), identifies the three(3) "direct scram signal" sources that are credited in the SRV sizing analysis. One(1) of these is from position switches (instrument switch) mounted in the MSIV's (trip system component).

Both the type of instrument switch (0.25 pt.) and trip system component (0.5 pt.) are required for each response for the following question (0.75 pts. each):

What are the other two(2) "direct scram signal" sources, considered in the FSAR design evaluation for SRV sizing?
(0.75 pts. each) (1.5)

*ANSWER
8.03 (1.5)

1. a. Position switches (mounted in), (0.25)
   b. the Turbine Stop Valves. (0.5)

2. a. Pressure switches (mounted on), (0.25)
   b. the turbine control valves (dump valve of the turbine control valve hydraulic actuation system). (0.5)

*REFERENCE
WNP-2 Technical Specifications Bases 3/4.2 (pp. B 3/4 4-1);
WNP-2 Technical Specifications Learning Objective #3;
K/A 295000G003 (System Wide Generics); Importance Rating **4.2**
K/A 295000G004 (System Wide Generics); Importance Rating **4.1**

*QUESTION 1.5
8.04 (~~2.5~~)

The Minimum Critical Power Ratio (MCPR) fuel cladding integrity Safety Limit is defined as the critical power ratio (CPR) in the limiting fuel assembly for which more than 99.9% of the fuel rods in the core are expected to avoid boiling transition considering eight(8) operational uncertainties. This safety limit is applicable during OPERATIONAL CONDITIONS 1 and 2, "High Pressure" and "High Flow". Four(4) of these "uncertainties" are:

1. XN-3 Critical Power Correlation
2. Core Inlet Enthalpy
3. Power Distribution (Local and Radial Peaking Factors)
4. Total Core Flow Rate

Deleted, 3/30/88 Thomas R. Newton

a. ~~What are the other four(4) of the eight(8) "uncertainties" considered in the MCPR Safety Limit? (0.25 pts. each)~~ (1.0)

b. What is the "THERMAL POWER, High Pressure, High Flow" MCPR Safety Limit with two(2) recirculation pumps operating (numerical value only)? (0.5)

c. What is the "THERMAL POWER, High Pressure, High Flow" MCPR Safety Limit with single recirculation pump operating (numerical value only)? (0.5)

d. What are the HIGH FLOW and HIGH PRESSURE conditions at which the "THERMAL POWER, High Pressure, High Flow" MCPR Safety Limit is applicable (values only, psig and % of rated flow)? (0.25 pts. each) (0.5)

*ANSWER 1.5
8.04 (~~2.5~~)

Deleted 3/30/88 Thomas R. Newton

~~a. (0.25 pts. each)~~ (1.0)
~~1. Feedwater Flow Rate~~
~~2. Feedwater Temperature~~
~~3. (Core) Pressure~~
~~4. Assembly (bundle) Flow Rate~~

b. (≥) 1.06 ("shall not less than 1.06") (0.5)
c. (≥) 1.07 ("shall not less than 1.07") (0.5)

d. (0.25 pts. each) (0.5)
1. (steam dome pressure >) 785 psig
2. (core flow >) 10% of rated flow (10.85 Mlb/hr)

*REFERENCE
WNP-2 Technical Specifications 2.1 (pp. 2-1), and Bases pp. B 2-1 through B 2-4;
WNP-2 Technical Specifications Learning Objective #2;
K/A 295000G004 (System Wide Generics); Importance Rating **4.1**

*QUESTION

8.05 (3.0)
You are the acting Shift Manager. your shift is involved in a major refueling (OPERATIONAL CONDITION 5) and the core loading has been delayed by various problems with the fuel grapple (telescopic boom). Your shift has been on watch in the control room for a steady fourteen (14) hours due to manpower restrictions from the extended shutdown, and you've had to rotate operators at the reactor control board.

a. What are the three(3) OPERATIONAL CONDITIONS that require a CRS on shift, per Technical Specification Table 6.2.2-1 (Minimum Shift Crew Composition)? (0.5)

b. How many Equipment Operators (EO) should you have on your shift to meet the guidelines specified by Administrative Procedure, PPM 1.3.2 (Shift Compliment and Functions) for a normal rotating shift crew size? (0.25)

c. How much longer (in hours) can the individuals on your shift continue to persistantly work (excluding shift turnover time) without deviating from the overtime restrictions specified by PPM 1.3.27 (Overtime Control)? (1.0)

d. What is the maximum time (in hours) that you can allow one of your fresh operators to continuously work at the reactor control board, as specified by PPM 1.3.27 (Overtime Control)? (0.5)

e. How much of a break (in hours) must a licensed reactor operator working on the refueling floor for 14 straight hours have before reassignment to the control room, per PPM 1.3.27 (Overtime Control)? (0.75)

*ANSWER
8.05 (3.0)

a. OPERATIONAL CONDITIONS 1, 2, or 3 (must have all modes) (0.5)
b. 5 (EO's) (0.25)

c. (16 - 14 "straight" hours) (0.75)
2 hours (0.25)

d. 8 hours (0.5)
e. 12 hours (0.75)

*REFERENCE
WNP-2 Technical Specifications Table 6.2.2-1;
PPM 1.3.2 Shift Compliment and Functions, (pp.2);
PPM 1.3.27 (Overtime Control), (pp. 1-2);
WNP-2 Learning Objectives PPM 1.3.2 #1 and #6;
WNP-2 Learning Objectives PPM 1.3.27 #1 and #3;
K/A 294001A103 (Plant Wide Generics); Importance Rating **3.7**

*QUESTION
8.06 (2.0)

Administrative procedures PPM 13.5.1 (Controlled Evacuation of the Protected Area) and PPM 13.5.2 (Immediate Evacuation of the Protected Area) differ in the guidance given to the Control Room Personnel in directing where evacuees are to report to. If an alternate area is not otherwise specified:

a. What assembly area does PPM 13.5.1 require "in-plant evacuees" to be directed to? (0.5)

b. What assembly area does PPM 13.5.2 require "evacuees" to be directed to? (0.5)

c. Who is the person responsible for implementing a controlled or immediate evacuation of the protected area (by EPIP title only - it is understood that a licensed SRO on shift could fill this position temporarily)? (0.5)

d. What is the name of the computerized system in the control room which will aid the Shift Manager in determining the initial classification of an emergency? (0.5)

*ANSWER
8.06 (2.0)

a. Operations Support Center (0.5)

b. (Plant Support Facility) ambulance garage (0.5)

c. Plant Emergency Director (0.5)

d. Graphic Display System (GDS) (0.5)

*REFERENCE
PPM 13.5.1 Controlled Evacuation of the Protected Area, (pp.1-2)
PPM 13.5.2 Immediate Evacuation of the Protected Area, (pp. 1-2)
PPM 13.1.1 Classifying the Emergency, pp. 2-21 & Attachment D;
WNP-2 Learning Objectives, PHASE II Emergency Planning, 2,5,6;
K/A 294001A110 (Plant Wide Generics); Importance Rating **4.2**
K/A 294001A116 (Plant Wide Generics); Importance Rating **4.7**

*QUESTION
8.07 (2.5)
You are the Shift Foreman during a major LOCA event, on swing shift, on the weekend. The event was initiated when a PASS line tail piece leading to Jet Pump # 10 instrument line broke clean at 100% power. The subsequent stresses on a Jet Pump riser have propagated a crack which seems to be growing. Your CRS has stabilized the plant per the Emergency Operating Procedures and makes his first report to you on current plant conditions, as follows:

1. Reactor Water level is at -60 inches and recovering at a slowing trend.

2. A scram has occurred, however the APRM's all indicate 12%.

3. The containment isolation logic was met, but the A inboard and the outboard Main Steam Isolation Valves failed to close.

4. Drywell Pressure is at 1.69 psig and rising.

5. Suppression Pool temperatures have stabilized at 115 degrees F.

6. Health Physics reports no Site boundary dose rate above background.

In performing your duties as Shift Manager per the WNP-2 Emergency Plan, you must make the initial classification of the Emergency until relieved by the Plant Manager, Assistant Plant Manager, or one(1) other facility official. Based solely on the information provided by your CRS and using the attached procedure, PPM 13.1.1 Attachment A (Guidance For Classifying Emergencies):
****
a. What is the title of the one(1) other facility official that may relieve you of your duties per the WNP-2 Emergency Plan? (0.5)
b. What is the MINIMUM Emergency Classification level that you can classify this emergency? (2.0)
****
*ANSWER
8.07 (2.5)

a. Operations Manager (0.5)
b. Site Area Emergency (2.0)
(for application of data and integrated systems analysis)

*REFERENCE
PPM 13.1.1 Classifying the Emergency, pp. 2-21 & Attachments A-B;
WNP-2 Learning Objectives, PHASE II Emergency Planning, 3,5;
K/A 294001A111 (Plant Wide Generics); Importance Rating **4.3**
K/A 294001A116 (Plant Wide Generics); Importance Rating **4.7**

CONTROLLED COPY

GUIDANCE FOR CLASSIFYING EMERGENCIES

INTRODUCTION

Emergency classification is the final responsibility of the Plant Emergency Director based on the recommendations of technical and operations staff. These inputs may come from the Control Room, Technical Support Center, or Emergency Operations Facility. The most likely mechanism is for the Shift Manager to make recommendations based on plant parameters or initial dose assessments. Initially, however, during back-shifts, the Shift Manager will also function as the Plant Emergency Director, and recommendations will come to him from the operating crew.

The situation based and symptomatic initiating conditions (Emergency Action Levels) for each class of emergency are as follows: (Refer to Attachment D, "Bases for the Classification Methodology," for an explanation of the bases of all initiating conditions.)

CAUTION: This procedure is only a guide. Proper judgment based on a "safety first" principle must be used as the final consideration for all classifications.

A. Unusual Event (See EPIP 13.1.2, "Plant Emergency Director Duties", for Actions.)

If any of the following conditions exist, consider declaring an Unusual Event.

1. Symptomatic Initiating Conditions (Unusual Event)

   a. Lo Lo reactor vessel water level (-50 inches).

   b. Reactor pressure greater than or equal to 1148 psig.

   c. Drywell pressure greater than or equal to 1.88 psig.

   d. Drywell pressure less than or equal to -1.0 psig for a period of one hour or more.

   e. Drywell floor and equipment drain sump flow greater than or equal to 36,000 gallons in any 24-hour period.

   f. Drywell floor drain sump flow rate greater than or equal to 5 gpm.

g. Drywell temperature greater than or equal to 135°F for a period of eight hours or more.

h. Suppression Pool water temperature greater than or equal to 110°F with reactor power greater than or equal to one percent.

i. Suppression Pool level greater than or equal to +2 inches or less than or equal to -2 inches for a period of one hour or more.

2. Situation Based Initiating Conditions (Unusual Event)

a. Any plant condition requiring plant shutdown as a result of exceeding the limiting conditions for operation and associated action items, (as defined in the WNP-2 Technical Specifications) and is of immediate safety concern or where other than a normal controlled shutdown takes place. Examples of this condition include, but are not limited to, the following:

1) A stuck-open main steam relief valve.

2) Loss of fire protection systems that threaten the normal level of plant safety.

3) Release of radioactive material in liquid, gaseous, or particulate form in excess of Technical Specification limits.

4) Exceeding the LCO for Containment Integrity.

b. Natural phenomena and other hazards at or near the site that threaten the normal level of safety of the plant. Examples of such hazards include, but are not limited to, the following:

1) Floods (River Pumphouse in danger of inundation as observed).

2) Earthquakes (any earthquake detected by the seismic instrumentation).

3) Tornados (sited from plant site).

4) Unusual aircraft activity over facility, aircraft crash, or train derailment on site but not affecting safety-related equipment.

5) Explosions on site, but not affecting plant operation.

6) Toxic or flammable gas releases near or on site.

7) Visible ash fallout from volcanic activity.

8) High winds, sustained above 80 mph.

9) Range fires near the site which threaten to reduce the normal level of safety at the plant.

c. Any plant condition at or near the plant that warrants increased awareness on the part of plant personnel. Examples of this condition include, but are not limited to, the following:

1) Transportation of a contaminated injured individual from the plant to an offsite hospital.

2) Loss of all offsite power.

3) A fire in a safety-related portion of the Protected Area requiring activation of the Plant Emergency Team (fire brigade).

4) Reactor scram initiated, all rods not full in, but reactor is subcritical.

5) A breach of security, such as attempted sabotage.

6) An area radiation alarm Hi and an increasing or sustained high level confirmed by direct measurement.

B. Alert (See EPIP 13.1.2 "Plant Emergency Director Duties" for Actions.)

If any of the following initiating conditions exist, consider declaring an Alert.

1. Symptomatic Initiating Conditions (Alert)

a. Power range monitoring system detects reactor power at greater than or equal to five percent, ten or more seconds after a scram.

b. Reactor water level less than or equal to -129 inches.

c. Main steam isolation valve closure logic met; both inboard and outboard valves on one or more lines fail to close.

d. Containment isolation logic met, but both inboard and outboard valves on one or more Reactor Coolant Pressure Boundary (RCPB) lines fail to close.

e. Reactor pressure greater than or equal to 1250 psig.

f. Site boundary dose rate greater than or equal to 0.5 mR/hr whole body or 2.5 mRem/hr thyroid.

2. Situation Based Initiating Conditions (Alert)

a. A condition where a safety system instrument has failed to initiate an automatic protective action such that the safety limits could be exceeded.

b. Natural phenomena and other hazards that represent a substantial degradation in the level of plant safety or warrant the use of additional personnel for accident assessment and in-plant response. Examples of such hazards include, but are not limited to, the following:

1) Flooding or potential flooding that directly affects plant safety systems.

2) Sustained wind speeds in excess of 100 mph.

3) Severe electrical storms that cause major failure of safety-related instruments.

4) A tornado within the protected area boundary, and compromising safety-related equipment.

5) An aircraft crash or train derailment compromising safety-related equipment.

6) An explosion causing plant damage that affects the operation of safety systems.

7) Entry of toxic or flammable gas into plant facilities.

8) Volcanic ash fallout severe enough to warrant plant shutdown.

9) Anticipated Control Room evacuation to Remote Shutdown Panel.

10) A fire affecting a safety system.

11) Ongoing security compromise requiring additional support.

12) An earthquake equivalent to an operating basis earthquake.

c. Situations where a release of radioactive material warrants offsite response or personnel to perform offsite monitoring, but does not require any protective actions. Examples include the following:

1) Measured or calculated site boundary whole body dose rates greater than or equal to 0.5 mR/hr or 2.5 mRem/hr thyroid.

2) Standby Service Water System high radiation level and inability to isolate.

C. Site Area Emergency (See EPIP 13.1.2 "Plant Emergency Director Duties" for Actions.)

If any of the following initiating conditions exist, consider declaring a Site Area Emergency.

1. Symptomatic Initiating Conditions (Site Area Emergency)

a. Reactor pressure greater than or equal to 1325 psig.

b. Drywell temperature greater than or equal to 340°F.

c. Primary containment integrity threatened based on exceeding the following limits from the Emergency Procedures (PPM 5.0 series):

1) Heat Capacity Temperature Limit (HCTL)

2) Suppression Pool Load Limit (SPLL)

3) Heat Capacity Level Limit (HCLL)

4) Primary Containment Pressure Limit (PCPL)

d. Site boundary dose rate greater than or equal to 50 mR/hr whole body or 250 mRem/hr thyroid.

e. Reactor power greater than five percent and Suppression Pool temperature greater than 110°F and either a safety relief valve open or drywell pressure greater than 1.68 psig.

2. Situation Based Initiating Conditions (Site Area Emergency)

a. Conditions where the Safety Limits and associated action requirements have been violated. Examples include the following:

1) Significant failed fuel, as verified by reactor coolant sample analysis and evaluated per PPM 9.3.22, "Core Damage Evaluation."

2) Failure of the ECCS systems and other water sources to adequately keep the core covered above 2/3 core height.

b. Situations where the level of safety has, or could be, degraded to the point of losing a plant function needed to protect the public. Examples include, but are not limited to, the following:

1) Failure of the Standby Gas Treatment System to function when needed.

2) Failure of fuel cladding (same as item C.2.a above).

3) Failure or potential failure of the primary containment in such a way that would allow significant leakage.

c. Any plant condition that threatens the safety of the plant and warrants the activation of the Technical Support Center, Operations Support Center, and Emergency Operations Facility for the purpose of accident assessment, in-plant response, and offsite response (e.g. monitoring teams) or precautionary public notification near the site. Examples include, but are not limited to, the following:

1) Fire affecting safety systems to the point of inadequate control of the plant.

2) Elevated hydrogen levels inside containment, coupled with oxygen concentrations sufficient to cause a potentially harmful pressure spike should the two gases ignite (this requires engineering analysis, refer to PPM 9.3.25).

3) An earthquake greater than the safe shutdown earthquake.

4) Any natural or man-made event that jeopardizes the plant safety systems to the point of inadequate control of the plant.

5) Failure of secondary containment isolation when required.

6) Fuel Pool level below bottom of fuel transfer gate and decreasing (assumes spent fuel in the pool).

7) A security compromise seriously affecting the physical control of the plant.

d. A situation where significant release of radioactive material has or could take place. Examples include the following:

Measured or calculated site boundary dose rates greater than or equal to 50 mR/hr whole body or 250 mRem/hr to the thyroid at the exclusion area boundary (1.2 miles).

D. General Emergency (See EPIP 13.1.2 "Plant Emergency Director Duties" for Actions.)

If any of the following initiating conditions exist, consider declaring a General Emergency.

1. Symtomatic Initiating Conditions (General Emergency)

Site boundary dose rate greater than or equal to 1 R/hr whole body or 5 Rem/hr thyroid.

2. Situation Based Initiating Conditions (General Emergency)

a. Loss of, or high potential for loss of, primary containment and known core damage. Emergency Operating Procedures (PPM Volume 5) should be used as guidance in determining these conditions.

b. Any major event that could cause a degradation of plant safety such that the release of large amounts of radioactive material in a short period of time is possible. Examples include the following:

Measured or calculated site boundary doses greater than or equal to one rem whole body or five times this level to the thyroid, at the exclusion area boundary.

c. Any condition that warrants the activation of the Technical Support Center, the Operations Support Center, and the Emergency Operations Facility for accident assessment, in-plant response, and offsite emergency response to aid in the implementation of protective actions. Examples include the following:

A security compromise resulting in the total loss of control of the plant.

NOTE: A summary of symptomatic and situation based initiating conditions can be found in Attachments B and C, respectively.

*QUESTION
8.08 (1.5)

WNP-2 Technical Specification 6.2 (Organization) specifies that the site Fire Brigade shall not include "the three other members of the minimum shift crew necessary for safe shutdown of the unit". Two(2) additional members of the "minimum shift crew" are also specifically identified (by title) to be exempt from the Fire Brigade.

a. What are the titles of these two(2) additional members of the "minimum shift crew" who are to be exempt from the Fire Brigade? (0.5 pts. each) (1.0)

b. Who (by title) will act as the Fire Brigade Leader, in accordance with PPM 1.3.10 (Fire Protection Program)? (0.5)

*ANSWER
8.08 (1.5)

a. (0.5 pts. each) (1.0)

1. Shift Technical Advisor (STA)
2. Shift Supervisor (SM, CRS acceptable)

b. Shift Support Supervisor (SSS) (0.5)

*REFERENCE
WNP-2 Technical Specification 6.2 (Organization), pp.6-1;
PPM 1.3.10 (Fire Protection Program), pp.7;
WNP-2 Technical Specifications Learning Objective 11;
K/A 294001K116 (Plant Wide Generics); Importance Rating **3.1**

*QUESTION
8.09 (1.0)

You are acting Control Room Supervisor, on the mid-watch, when a reactor scram occurs due to high reactor pressure. Your Reactor Operator at the reactor control board informs you that the Limiting Safety System Setpoint was exceeded for two(2) code safty/relief valves and that they did not lift! Upon further review it was determined that the RCS Pressure SAFETY Limit was briefly exceeded. Pursuant to 10CFR50.72 and PPM 1.3.5 (Reactor Trip & Recovery):

a. Whose permission (other than plant management's) is required to restart the reactor? (0.5)

b. Who is <u>responsible</u> for the initial reactor trip investigation? (0.5)

*ANSWER
8.09 (1.0)

a. USNRC (Safety Limit Violation) (0.5)

b. Operations Manager (assistant Operations Manager) (0.5)

*REFERENCE
10CFR50.72;
PPM 1.3.5 (Reactor Trip & Recovery), pp. 2;
WNP-2 Technical Specifications Learning Objective 12;
K/A 295025K002 (System Wide Generics); Importance Rating **4.3**

*QUESTION
8.10 (1.5)

The main turbine bypass system is required to be operable in OPERATIONAL CONDITION 1 at or above a specific power level, in accordance with WNP-2 Technical Specification LCO 3.7.9 (MAIN TURBINE BYPASS SYSTEM). The BASES for this LCO states that upon an over pressure event, the main turbine bypass system provides pressure relief in spite of a specific system component failure event (not within the turbine bypass system), so that a certain SAFETY LIMIT is not violated:

a. What is this specific power level (in % of rated thermal power)? (0.5)

b. What is the specific system component failure analyzed for in the BASES for the main turbine bypass system? (0.5)

c. What is this SAFETY LIMIT that will not be violated, consistent with the event analysis of the main turbine bypass system? (0.5)

*ANSWER
8.10 (1.5)

a. 25% (of rated thermal power) (0.5)

b. feedwater controller (failure) (0.5)

c. MCPR (safety limit) (0.5)

*REFERENCE
WNP-2 Technical Specification LCO 3.7.9 (MAIN TURBINE BYPASS SYSTEM) and BASES 3/4.7.9;
WNP-2 Technical Specifications Learning Objectives 1&3,;
K/A 295025K003 (System Wide Generics); Importance Rating **4.3**
K/A 295025K004 (System Wide Generics); Importance Rating **4.2**

*QUESTION
8.11 (0.75)

MULTIPLE CHOICE (Select the Correct Response)

PPM 1.3.7 (Maintenance Work Request) identifies four(4) types of Maintenance Work Requests (MWR's). One(1) of these is a "STANDARD" MWR.

Which one(1) of the following statements correctly describe the purpose of a "SHOP" MWR?

a. To control, identify, document, and determine the requirements for certain repetitive corrective maintenance tasks and activities.

b. To control, identify, document, and determine the requirements for singular corrective maintenance tasks when failure to complete the task could result in a reportable occurrence.

c. To control, identify, document, and determine the requirements for corrective maintenance tasks and/or modifications which do not affect the operation of the Plant or security systems.

d. To control, identify, document, and determine the requirements for "one of a kind" equipment malfunctions or plant modifications.

*ANSWER
8.11 (0.75)

c (SHOP MWR)

*REFERENCE
PPM 1.3.7 (Maintenance Work Request), pp. 1&2;
WNP-2 Learning Objective PPM 1.3.7, # 1;
K/A 294001A103 (Plant Wide Generics); Importance Rating **3.7**

*QUESTION
8.12 (2.0)

PPM 1.3.8 (Equipment Clearance and Tagging) states that when there would be a great advantage to perform a brief test without releasing a clearance order, a certain licensed operator on shift and the authorized individual holding the clearance order, may verbally agree to lift some tags. The time that tags can remain lifted may not run through a shift change. In accordance with PPM 1.3.8:

a. What is the title of the licensed operator on shift that can authorize the temporary lifting of tags? (0.5)

b. What is the MAXIMUM time (hrs) that a danger tag may be lifted? (0.5)

c. When is the temporary lifting of tags NEVER permitted? (1.0)

*ANSWER
8.12 (2.0)

a. Shift Manager (0.5)

b. (less than) 1 hr. (0.5)

c. If the clearance order is a multiple clearance order, (temporary lifting of tags is not permitted.) (1.0)

*REFERENCE
PPM 1.3.8 (Equipment Clearance and Tagging), pp. 11;
WNP-2 Learning Objective PPM 1.3.8, # 3&6;
K/A 294001K102 (Plant Wide Generics); Importance Rating **4.5**

*QUESTION
8.13 (2.5)

WNP-2 Technical Specifications identify six(6) specific conditions that establish when PRIMARY CONTAINMENT INTEGRITY exists. One(1) of these conditions is:

All primary containment penetrations required to be closed during accident conditions are either:

1. Capable of being closed by an operable automatic isolation system, or

2. Closed by at least one manual valve, blind flange, or deactivated automatic valve secured in its closed position (except as provided in the specifications).

What are the other five(5) specific conditions that establish when PRIMARY CONTAINMENT INTEGRITY exists?
(0.5 pts. each) (2.5)

*ANSWER
8.13 (2.5)

(any order, 0.5 pts. each) (2.5)

1. All primary containment equipment hatches are closed and sealed.

2. (Each) primary containment airlock is "operable" (in compliance with the requirements of Specification 3.6.1.3).

3. The primary containment leakage rates are within limits (of Specification 3.6.1.2).

4. The suppression chamber is "operable" (in compliance with the requirements of Specification 3.6.2.1).

5. The sealing mechanism associated with (each) primary containment penetration is operable (welds, bellows, or O-rings are acceptable "sealing mechanisms").

*REFERENCE
WNP-2 Technical Specification Definition 1.32;
WNP-2 Technical Specification LCO 3.6.1;
WNP-2 Technical Specifications Learning Objectives #6,1.31;
K/A 295026A008 (System Wide Generics); Importance Rating **4.5**
K/A 295027A008 (System Wide Generics); Importance Rating **4.5**
K/A 295028A008 (System Wide Generics); Importance Rating **4.5**
K/A 295029A008 (System Wide Generics); Importance Rating **4.5**
K/A 295030A008 (System Wide Generics); Importance Rating **4.5**
****
END OF SECTION 8
END OF EXAMINATION

MASTER KEY

KEY

U.S. NUCLEAR REGULATORY COMMISSION
REACTOR OPERATOR LICENSE EXAMINATION

Facility: WNP-2
Reactor Type: BWR-GE5
Date Administered: MARCH 22, 1988
Examiner: THOMAS R. MEADOWS, RV
Candidate: _____

INSTRUCTIONS TO CANDIDATE:

Use separate paper for the answers. Write answers on side only. Staple question sheet on top of the answer sheets. Points for each question are indicated in parentheses after the question. The passing grade requires at least 70% in each category and a final grade of at least 80%. Examination papers will be picked up six (6) hours after the examination starts.

Category Value	% of Total	Candidate's Score	% of Category Value	Category
25	25	_____	_____	1. Principles of Nuclear Power Plant Operation, Thermodynamics, Heat Transfer and Fluid Flow
25	25	_____	_____	2. Plant Design Including Safety and Emergency Systems
25	25	_____	_____	3. Instruments and Controls
25	25	_____	_____	4. Procedures - Normal, Abnormal, Emergency, and Radiological Control
100		_____		TOTALS

Final Grade _____%

All work done on this examination is my own. I have neither given nor received aid.

_____
Candidate's Signature

ATTACHMENT 1 (continued)

Enclosure 2

REQUIREMENTS FOR ADMINISTRATION OF WRITTEN EXAMINATIONS

1. A single room shall be provided for completing the written examination. The location of this room and supporting restroom facilities shall be such as to prevent contact with all other facility and/or contractor personnel during the duration of the written examination. If necessary, the facility should make arrangements for the use of a suitable room at a local school, motel, or other building. Obtaining this room is the responsibility of the licensee.

2. Minimum spacing is required to ensure examination integrity as determined by the chief examiner. Minimum spacing should be one candidate per table, with a 3-ft space between tables. No wall charts, models, and/or other training materials shall be present in the examination room.

3. Suitable arrangements shall be made by the facility if the candidates are to have lunch, coffee, or other refreshments. These arrangements shall comply with Item 1 above. These arrangements shall be reviewed by the examiner and/or proctor.

4. The facility staff shall be provided a copy of the written examination and answer key after the last candidate has completed and handed in his written examination. The facility staff shall then have five working days to provide formal written comments with supporting documentation on the examination and answer key to the chief examiner or to the regional office section chief.

5. The facility licensee shall provide pads of 8-1/2 by 11 in. lined paper in unopened packages for each candidate's use in completing the examination. The examiner shall distribute these pads to the candidates. All reference material needed to complete the examination shall be furnished by the examiner. Candidates can bring pens, pencils, calculators, or slide rules into the examination room, and no other equipment or reference material shall be allowed.

6. Only black ink or dark pencils should be used for writing answers to questions.

NRC RULES AND GUIDELINES FOR LICENSE EXAMINATIONS

During the administration of this examination the following rules apply:

1. Cheating on the examination means an automatic denial of your application and could result in more severe penalties.

2. Restroom trips are to be limited and only one candidate at a time may leave. You must avoid all contacts with anyone outside the examination room to avoid even the appearance or possibility of cheating.

3. Use black ink or dark pencil only to facilitate legible reproductions.

4. Print your name in the blank provided on the cover sheet of the examination.

5. Fill in the date on the cover sheet of the examination (if necessary).

6. Use only the paper provided for answers.

7. Print your name in the upper right-hand corner of the first page of each section of the answer sheet.

8. Consecutively number each answer sheet, write "End of Category __" as appropriate, start each category on a new page, write only one side of the paper, and write "Last Page" on the last answer sheet.

9. Number each answer as to category and number, for example, 1.4, 6.3.

10. Skip at least three lines between each answer.

11. Separate answer sheets from pad and place finished answer sheets face down on your desk or table.

12. Use abbreviations only if they are commonly used in facility literature.

13. The point value for each question is indicated in parentheses after the question and can be used as a guide for the depth of answer required.

14. Show all calculations, methods, or assumptions used to obtain an answer to mathematical problems whether indicated in the question or not.

15. Partial credit may be given. Therefore, ANSWER ALL PARTS OF THE QUESTION AND DO NOT LEAVE ANY ANSWER BLANK.

16. If parts of the examination are not clear as to intent, ask questions of the examiner only.

17. You must sign the statement on the cover sheet that indicates that the work is your own and you have not received or been given assistance in completing the examination. This must be done after the examination has been completed.

18. When you complete your examination, you shall:

a. Assemble your examination as follows:

(1) Exam questions on top.

(2) Exam aids - figures, tables, etc.

(3) Answer pages including figures which are a part of the answer.

b. Turn in your copy of the examination and all pages used to answer the examination questions.

c. Turn in all scrap paper and the balance of the paper that you did not use for answering the questions.

d. Leave the examination area, as defined by the examiner. If after leaving, you are found in this area while the examination is still in progress, your license may be denied or revoked.

ATTACHMENT 1 (Continued)

Enclosure 3

Requirements for Facility Review of Written Examination

1. There shall be no review of the written examination by the facility staff before or during the administration of the examination. Following the administration of the written examination, the facility staff shall be provided a marked-up copy of the examination and the answer key.

2. The facility will have five (5) working days from the day of the written examination is given to provide formal comment submittal. The submittal will be made to the responsible Regional Office by the highest level of corporate management for plant operations, e.g., Vice President for Nuclear Operations. A copy of the submittal will beforwarded to the chief examiner, as appropriate. Comments not submitted within five (5) working days will be considered for inclusion in the grading process on a case by case basis by the Regional Office section leader. Should the comment submittal deadline not be met, a long delay for finalization of the examination results may occur.

3. The following format should be adhered to for submittal of specific comments:

   a. Listing of NRC Question, answer and reference.

   b. Facility comment & Evaluation

   c. Supporting documentation

   NOTES:
   1. No change to the examination will be made without submittal of complete, current, and approved reference material.

   2. Comments made without a concise facility recommendation will not be addressed.

EQUATION SHEET

$f = ma$

$w = mg$

$E = mC^2$

$KE = \frac{1}{2}mv^2$

$PE = mgh$

$W = \nu\Delta P$

$\Delta E = 931\Delta m$

$\dot{Q} = \dot{m}C_p\Delta T$

$\dot{Q} = UA\Delta T$

$Pwr = W_f\,\dot{m}$

$P = P_o\ 10^{SUR(t)}$

$P = P_o\ e^{t/T}$

$SUR = 26.06/T$

$T = 1.44\ DT$

$SUR = 26\left(\frac{\lambda_{eff}\rho}{\bar{\beta} - \rho}\right)$

$T = (\ell^*/\rho) + [(\bar{\beta} - \rho)/\lambda_{eff}\rho]$

$T = \ell^*/(\rho - \bar{\beta})$

$T = (\bar{\beta} - \rho)/\lambda_{eff}\rho$

$\rho = (K_{eff} - 1)/K_{eff} = \Delta K_{eff}/K_{eff}$

$\rho = [\ell^*/TK_{eff}] + [\bar{\beta}/(1 + \lambda_{eff}T)]$

$P = \Sigma\phi V/(3 \times 10^{10})$

$\Sigma = N\sigma$

$v = s/t$

$s = v_o t + \frac{1}{2}at^2$

$a = (v_f - v_o)/t$

$v_f = v_o + at$

$\omega = \theta/t$

Cycle efficiency $= \frac{\text{Net Work (out)}}{\text{Energy (in)}}$

$A = \lambda N \qquad A = A_o e^{-\lambda t}$

$\lambda = \ln 2/t_{\frac{1}{2}} = 0.693/t_{\frac{1}{2}}$

$t_{\frac{1}{2}}(eff) = \frac{(t_{\frac{1}{2}})(t_b)}{(t_{\frac{1}{2}} + t_b)}$

$I = I_o e^{-\Sigma x}$

$I = I_o e^{-\mu x}$

$I = I_o\ 10^{-x/TVL}$

$TVL = 1.3/\mu$

$HVL = 0.693/\mu$

$SCR = S/(1 - K_{eff})$

$CR_x = S/(1 - K_{effx})$

$CR_1(1 - K_{eff})_1 = CR_2(1 - K_{eff})_2$

$M = 1/(1 - K_{eff}) = CR_1/CR_0$

$M = (1 - K_{eff})_0/(1 - K_{eff})_1$

$SDM = (1 - K_{eff})/K_{eff} \approx 1 - K_{eff}$

$\ell^* = 1 \times 10^{-5}$ seconds

$\lambda_{eff} = 0.1$ seconds^{-1}

$I_1 d_1 = I_2 d_2$

$I_1 d_1^2 = I_2 d_2^2$

$R/hr = (0.5\ CE)/d^2$ (meters)

$R/hr = 6\ CE/d^2$ (feet)

WATER PARAMETERS

1 gal. = 8.345 lbm

1 gal. = 3.78 liters

1 ft^3 = 7.48 gal.

Density = 62.4 lbm/ft^3

Density = 1 gm/cm^3

Heat of vaporization = 970 Btu/lbm

Heat of fusion = 144 Btu/lbm

1 Atm = 14.7 psi = 29.9 in. Hg.

1 ft. H_2O = 0.4335 lbf/in^2

MISCELLANEOUS CONVERSIONS

1 Curie = 3.7×10^{10} dps

1 kg = 2.21 lbm

1 hp = 2.54×10^3 BTU/hr

1 Mw = 3.41×10^6 Btu/hr

1 Btu = 778 ft-lbf

1 inch = 2.54 cm

$^oF = 9/5\,^oC + 32$

$^oC = 5/9\,(^oF - 32)$

SECTION 1

Principles of Nuclear Power Plant Operation, Thermodynamics, Heat Transfer and Fluid Flow

*QUESTION
1.01 (2.25)

Attached Figure 1.01 illustrates a reactivity addition due to control rod withdraw at "time 0", t=0. Rod motion stops at "time 1", t=1. At t=0, the reactor is critical and all IRM/APRM recorders indicate mid-position on range-1 (at Po). Source neutrons are not significant and the point of adding heat will not be reached until the IRM's are on ranges 6 to 7. (Assuming, $\bar{\beta}$eff = 0.0073, and $\bar{\lambda}$ = 0.1):

a. What would a trace of <u>log power</u> look like as a function of time between t=1 and the time when log power reaches IRM range-2 (indicate the trace on attached Figure 1.01)? (0.5)

b. What would a trace of <u>reactor period</u> look like as a function of time between t=0 and the time when log power reaches IRM range-2 (indicate the trace on attached Figure 1.01)? (1.0)

c. What is the value (in seconds) of the reactor period after rod motion stops, if the total positive reactivity insertion increased Keff to 1.001, as indicated on Figure 1.01?
SHOW ALL WORK!
(0.5 for correct application)
(0.25 for correct value) (0.75)

*ANSWER
1.01 (2.25)

a. see Attached Figure 1.01 (0.5)

b. see Attached Figure 1.01 (1.0)

Application:

c. p = (Keff-1)/Keff = (1.001-1)/1.001 = 0.001 (0.25)

T = ($\bar{\beta}$-p)/$\bar{\lambda}$p = (0.0073-0.001)/0.1 x 0.001 (0.25)

Value:

= 63 (+/- 3) seconds (0.25)

*REFERENCE
WNP-2 Reactor Theory Text, III. Reactor Kinetics, pp. 6-23;
WNP-2 Learning Objectives, Reactor Theory (not numbered);
K/A 292005K104 (THEORY); Importance Rating ***3.5***;
K/A 292008K112 (THEORY); Importance Rating ***3.7***;

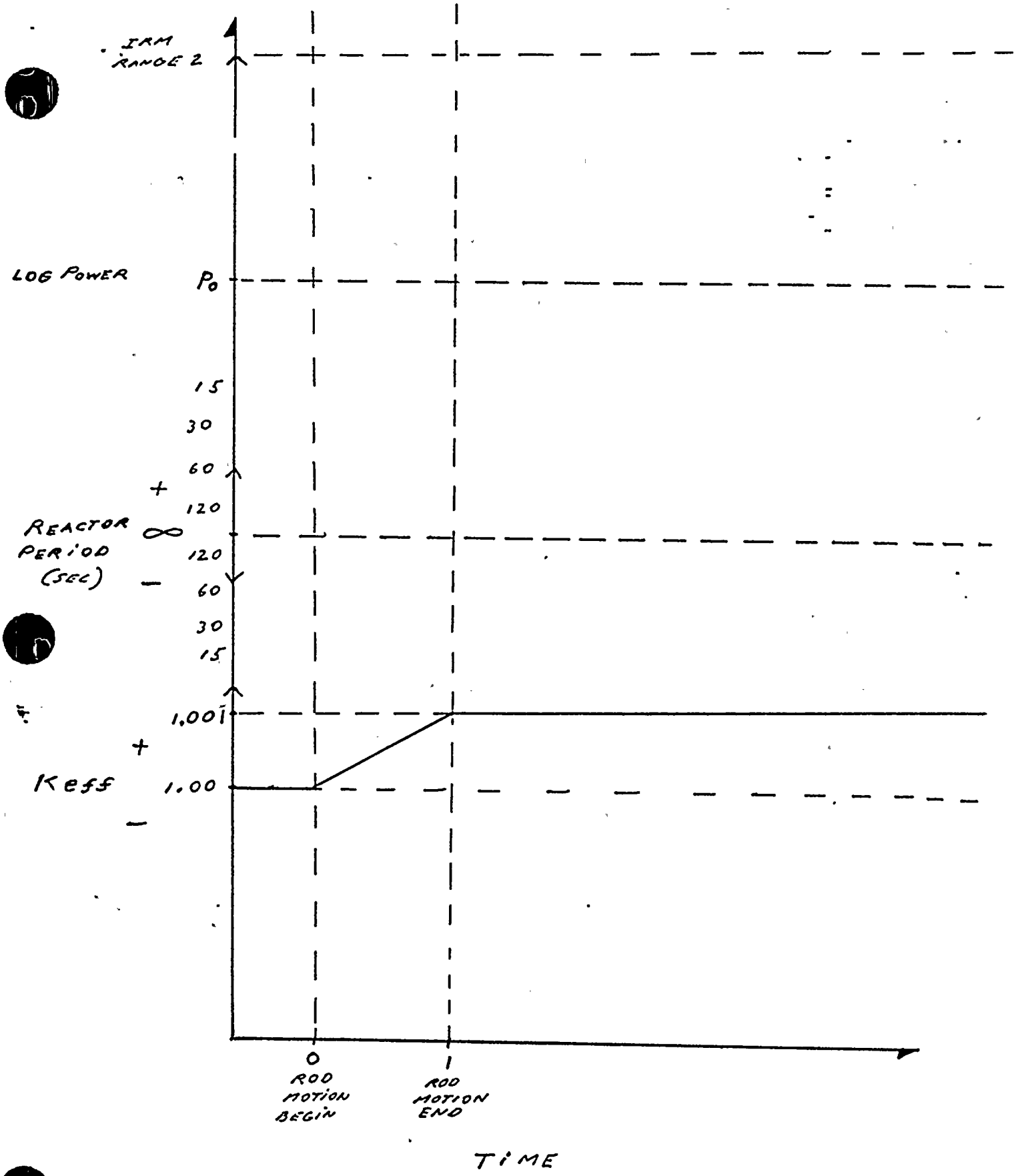
IRM RANGE 2
LOG POWER
P_0
15
30
60
+
120
REACTOR PERIOD (SEC)
∞
120
−
60
30
15
1.001
+
Keff
1.00
−
0
ROD MOTION BEGIN
1
ROD MOTION END
TIME

FIGURE 1.01

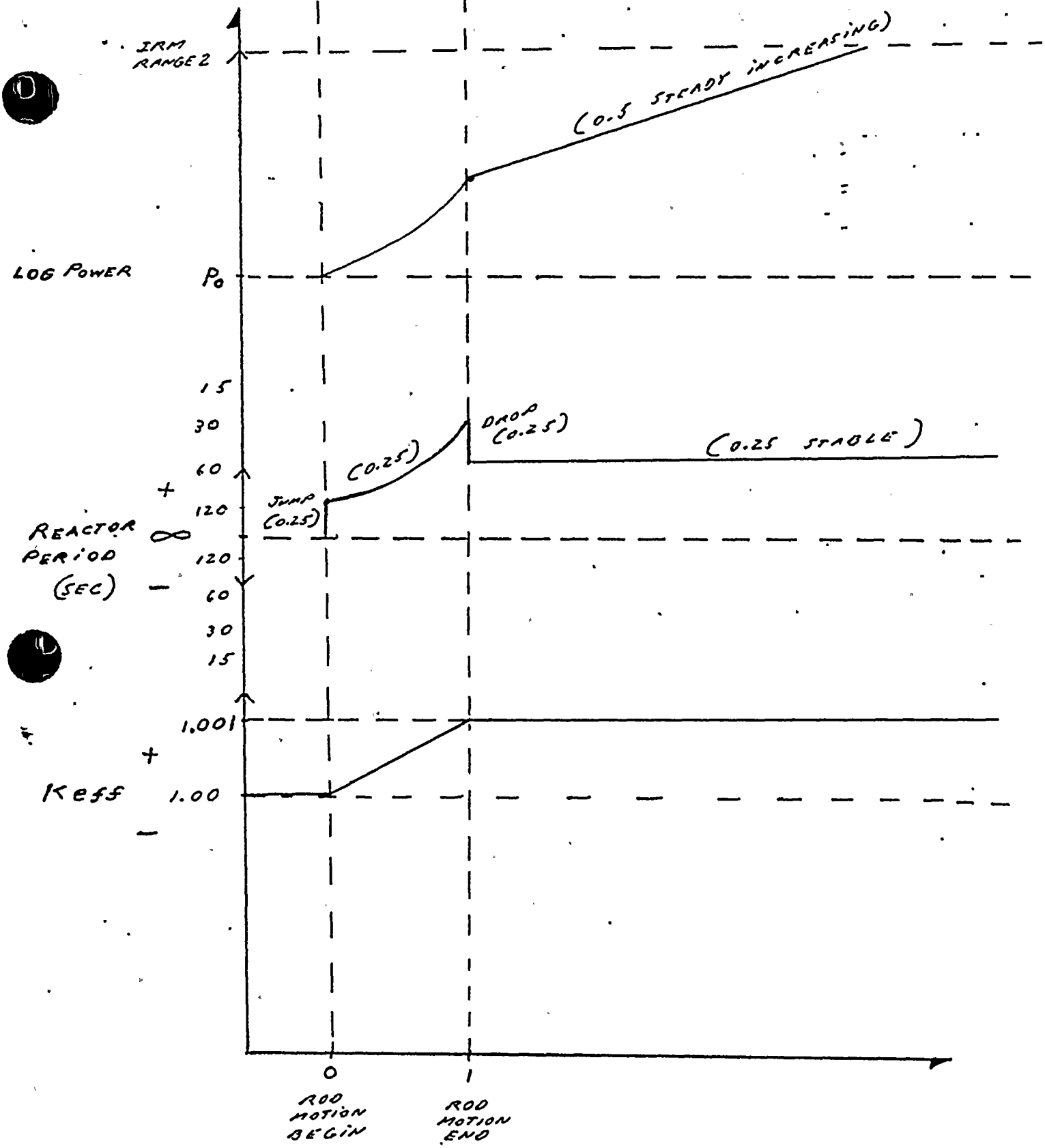

FIGURE 1.01

KEY

*QUESTION
1.02 (0.75)

MULTIPLE CHOICE (Select the Correct Response)

The safe control of the reactor is possible because of the nature of the neutron production from the fission process.

Which one(1) of the following statements correctly describe the influence of delayed neutrons on the fission process?

a. Delayed neutrons decrease the time required for the neutron population to change between generations.

b. Delayed neutrons increase the time required for the water to moderate the fission process.

c. Delayed neutrons increase the time required for the neutron population to change between generations.

d. Delayed neutrons decrease the moderation effect of the cladding on the fission process.

*ANSWER
1.02 (0.75)

c

*REFERENCE
WNP-2 Reactor Theory Text, pp. II-11;
WNP-2 Learning Objectives, Reactor Theory (not numbered);
K/A 292003K106 (THEORY); Importance Rating ***3.7***;

*QUESTION
1.03 (0.75)

MULTIPLE CHOICE (Select the Correct Response)

The safe control of the reactor is possible because of the nature of the neutron production from the fission process.

Which one(1) of the following statements correctly describe how delayed neutrons are produced?

a. Delayed neutrons are produced from the radiological disassociation of Xenon, under the influence of a neutron flux.

b. Delayed neutrons are produced from fission precursor nuclei by beta decay sequence, each having a definite half life.

c. Delayed neutrons are produced from fission precursor nuclei by alpha decay sequence, each having a definite half life.

d. Delayed neutrons are produced from the radiological disassociation of U-240, under the influence of a neutron flux.

*ANSWER
1.03 (0.75)

b

*REFERENCE
WNP-2 Reactor Theory Text, pp. II-11;
WNP-2 Learning Objectives, Reactor Theory (not numbered);
K/A 292003K106 (THEORY); Importance Rating ***3.7***;

*QUESTION
1.04 (0.75)

MULTIPLE CHOICE (Select the Correct Response)

Emergency Diesel Generator No.1 (DG1) is supplying its protected bus (SM-7) and paralleled to the grid for surveillance testing. The local "Remote/Local" select switch is in the "Remote" position. In the control room, you place the DG1 Governor switch in the "LOWER" position.

Which one(1) of the following DG1 control board indications correctly describe the initial response?

a. DG1 output frequency decreases.

b. DG1 output KW's decrease.

c. DG1 output KVAR's decrease.

d. DG1 output voltage decreases.

*ANSWER
1.04 (0.75)

b

*REFERENCE
WNP-2 Systems Training, DG, pp. 37-44;
WNP-2 Learning Objectives, Systems, DG, 19&20;
K/A 264000K502-4, Importance Rating ***2.4***;
K/A 264000K406, Importance Rating ***2.6***;
K/A 264000G007, (System Wide Generics), Importance Rating *3.6*;

*QUESTION
1.05 (0.75)

MULTIPLE CHOICE (Select the Correct Response)

Emergency Diesel Generator No.1 (DG1) is supplying its protected bus (SM-7), NOT paralleled to the grid, for load capacity testing. The local "Remote/Local" select switch is in the "Remote" position. In the control room, you place the DG1 Governor switch in the "LOWER" position.

Which one(1) of the following DG1 control board indications correctly describe the initial response?

a. DG1 output frequency decreases.

b. DG1 output KW's decrease.

c. DG1 output KVAR's decrease.

d. DG1 output voltage decreases.

*ANSWER
1.05 (0.75)

a

*REFERENCE
WNP-2 Systems Training, DG, pp. 37-44;
WNP-2 Learning Objectives, Systems, DG, 19&20;
K/A 264000K502-4, Importance Rating ***2.4***;
K/A 264000K406, Importance Rating ***2.6***;
K/A 264000G007, (System Wide Generics), Importance Rating *3.6*;

*QUESTION
1.06 (0.75)

MULTIPLE CHOICE (Select the Correct Response)

Emergency Diesel Generator No.1 (DG1) is running unloaded. The local "Remote/Local" select switch is in the "Remote" position. In the control room, you place the DG1 Governor switch in the "RAISE" position.

Which one(1) of the following DG1 control board indications correctly describe the initial response?

a. DG1 speed decreases.

b. DG1 output KW's decrease.

c. DG1 speed increases.

d. DG1 output voltage decreases.

*ANSWER
1.06 (0.75)

c

*REFERENCE
WNP-2 Systems Training, DG, pp. 37-44;
WNP-2 Learning Objectives, Systems, DG, 19&20;
K/A 264000K502-4, Importance Rating ***2.4***;
K/A 264000K406, Importance Rating ***2.6***;
K/A 264000G007, (System Wide Generics), Importance Rating *3.6*;

*QUESTION
1.07 (0.75)

MULTIPLE CHOICE (Select the Correct Response)

The "core effective delayed neutron fraction" (B-core) for WNP-2 decreases over core life. B-core, depends on both fuel enrichment and core age.

Which one(1) of the following statements correctly describe the reason that the delayed neutron fraction" (B-core) decreases over core life?

a. The percent of power produced by the fission of Pu-239 and Pu-241 decreases as the core ages.

b. The isotope specific delayed neutron fraction (Bi) for U-238 decreases.

c. The percent of power produced by the fission of Pu-239 and Pu-241 increases as the core ages.

d. The isotope specific delayed neutron fraction (Bi) for U-235 decreases.

*ANSWER
1.07 (0.75)

c

*REFERENCE
WNP-2 Reactor Theory Text, pp. II-12 through II-14;
WNP-2 Learning Objectives, Reactor Theory (not numbered);
K/A 292003K104 (THEORY); Importance Rating ***2.5***;

*QUESTION
1.08 (0.75)

MULTIPLE CHOICE (Select the Correct Response)

Which of the following responses correctly describe the reason that the Technical Specification LCO for RCS chloride (Cl) concentration is more restrictive in OPERATIONAL CONDITIONS-2&3 than in OPERATIONAL CONDITION-1?

a. The harmful corrosion effects of chlorides are not as great when the oxygen concentration in the coolant is LOW.

b. Chlorides are less likely to form inside the orificed fuel supports at HIGHER flow rates.

c. The harmful corrosion effects of chlorides are not as great when the oxygen concentration in the coolant is HIGH.

d. Chlorides are less likely to damage the RPV Dryer/Separators LOWER flow rates.

*ANSWER
1.08 (0.75)

a

*REFERENCE
Technical Specification LCO 3.4.4, Table 3.4.4-1, Bases 3/4.4.4;
WNP-2 Learning Objectives, Technical Specifications, 3;
K/A 218000K006 (System-Wide Generics), Importance Factor *3.3*

*QUESTION
1.09 (1.75)

During a refueling outage the state of the spent fuel pool changed from a condition of .120 DELTA-K (sub-critical) to a condition of 0.036 DELTA-K (sub-critical) by the placement of additional spent fuel in the fuel storage racks. Considering these two(2) conditions:

(SHOW ALL WORK!)

a. What is the Keff of the spent fuel pool for each of the two(2) conditions given above?

SHOW ALL WORK!
(0.5 for correct application)
(0.25 for each Keff) (1.0)

b. How much positive reactivity (delta K/K) was added to the spent fuel pool?

SHOW ALL WORK!
(0.5 for correct application)
(0.25 for correct value) (0.75)

*ANSWER
1.09 (1.75)

a. Application:
Keff = 1 - SDM (0.5)

Value:
Keff1 = 1 - .12 = .88 (+/- .002) (0.25)
Keff2 = 1 - .036 = .964 (+/- .002) (0.25)

b. Application:
p = Keff - 1 / Keff (0.25)

p1 = .88 - 1 / .88 = (-) .137 (+/- .001) (0.125)
p2 = .964 - 1 / .964 = (-) .037 (+/- .001) (0.125)

Value:
p (added) = p1 - p2 (0.125)
= .137 - .037 = ~~.001~~ .100 JM delta K/K (0.125)
(+/- .002)

NOTE

Any values used for Keff will be acceptable in part "b" if they are applied correctly and are consistent with the final numerical answer.

*REFERENCE
WNP-2 Reactor Theory Text, II. Reactor Kinetics, pp. 19-25;
WNP-2 Learning Objectives, Reactor Theory (not numbered);
K/A 292002K110 (THEORY); Importance Rating ***3.2***;
K/A 292002K111 (THEORY); Importance Rating ***3.2***;

JM; CORRECTION MADE BEFORE EXAMINATION ADMINISTERED & KEY FINALIZED. JM

*QUESTION
1.10 (0.75)

MULTIPLE CHOICE (Select the Correct Response)

Technical Specification LCO 3.4.4, Table 3.4.4-1 (Reactor Coolant System Chemistry Limits) requires the coolant chloride (Cl) concentration be at or below 0.2 ppm in OPERATIONAL CONDITION-1.

Which of the following responses correctly describe the reason for limiting the Cl concentration in the RCS?

a. Cl limits are established to prevent Cl from forming rust inside of the orificed fuel supports, causing a restriction to core flow.

b. Cl limits are established to prevent stress corrosion cracking of the stainless steel.

c. Cl limits are established to prevent Cl from increasing the corrosion wear on the low pressure turbine last stage buckets.

d. Cl limits are established to prevent excessive gamma radiation in the Main Steam Tunnel.

*ANSWER
1.10 (0.75)

b

*REFERENCE
Technical Specification LCO 3.4.4, Table 3.4.4-1, Bases 3/4.4.4;
WNP-2 Learning Objectives, Technical Specifications, 3;
K/A 218000K006 (System-Wide Generics), Importance Factor *3.3*

*QUESTION
1.11 (0.75)

MULTIPLE CHOICE (Select the Correct Response)

The "effective delayed neutron fraction" (Beff) is not the same as the "core effective delayed neutron fraction" (B-core). To account for the difference, B-core must be multiplied by an "importance factor".

Which one(1) of the following statements correctly describe the reason that B-core differs from Beff?

a. Both delayed and prompt neutrons are born as fast neutrons, however, delayed neutrons are born at lower energy levels.

b. Delayed neutrons are born within the intermediate energy range, while prompt neutrons are born fast energy range.

c. Both delayed and prompt neutrons are born as fast neutrons, however, delayed neutrons are born at higher energy levels.

d. Delayed neutrons have a slight probability of leaking out of the core, while B-core neutrons always remain in core.

*ANSWER
1.11 (0.75)

a

*REFERENCE
WNP-2 Reactor Theory Text, pp. II-1 through II-16;
WNP-2 Learning Objectives, Reactor Theory (not numbered);
K/A 292003K104 (THEORY); Importance Rating ***2.5***;

*QUESTION
1.12 (0.75)

MULTIPLE CHOICE (Select the Correct Response)

Figure 1.12 (Attached) shows the effect on water density during a reactor start up. As the heat up progresses through the Intermediate Range, you discover that it becomes harder to maintain a steady heat up rate (you get very busy withdrawing control rods).

Which of the following responses correctly describe the reason for this reactor behavior?

a. The positive moderator coefficient of reactivity is becoming more effective as the moderator density change per degree F change, decreases.

b. As the moderator temperature increases the thermal utilization factor (f) predominates in its effect on Keff, over the resonance escape probability (p).

c. The negative moderator coefficient of reactivity is becoming more effective as the moderator density change per degree F change, increases.

d. As the moderator density decreases thermal neutrons can not travel as far, causing the resonance escape probability (p) to decrease.

*ANSWER
1.12 (0.75)

c

*REFERENCE
WNP-2 Reactor Theory Text, IV. Reactivity Coefficients, pp. 1-12;
WNP-2 Learning Objectives, Reactor Theory (not numbered);
K/A 292004K101 (THEORY); Importance Rating ***3.2***;
K/A 292004K102 (THEORY); Importance Rating ***2.5***;
K/A 292008K115 (THEORY); Importance Rating ***3.7***;
K/A 292008K111 (THEORY); Importance Rating ***3.7***;

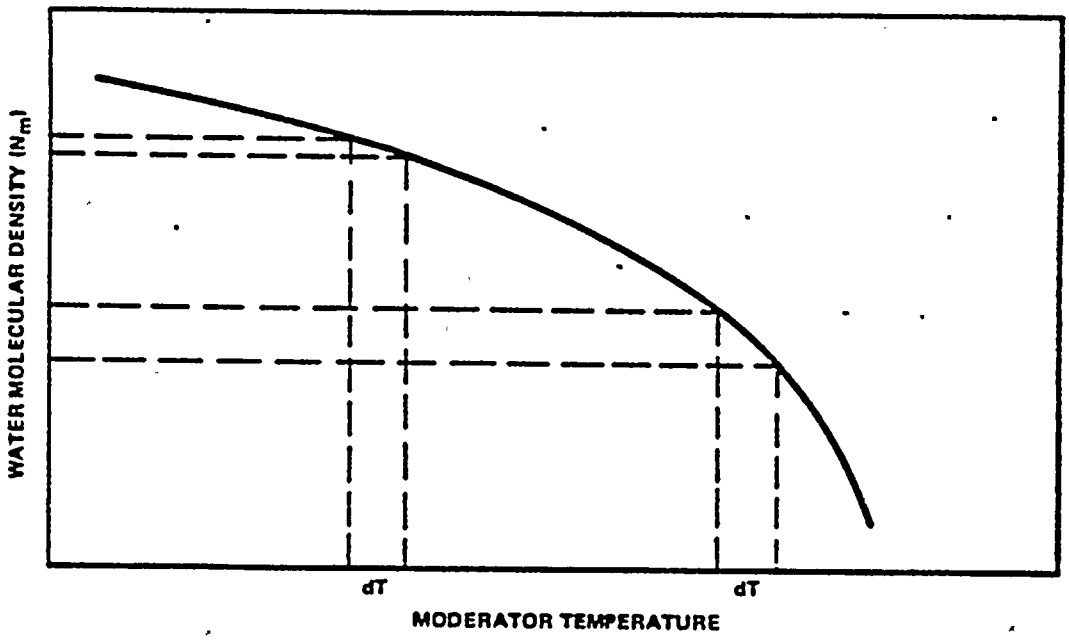

Figure 1.12 Moderator Density Versus Temperature

*QUESTION
1.13 (0.75)

MULTIPLE CHOICE (Select the Correct Response)

Reactivity varies with changes in fuel temperature. Therefore, the fuel temperature coefficient of reactivity (FTC) is defined as the change in reactivity due to a degree of fuel temperature change. The FTC for WNP-2 is always adds negative reactivity with increasing fuel temperature.

Which of the following responses correctly describe the reason that the effect of the FTC on reactor operations decreases at higher fuel temperatures?

a. At higher fuel temperatures the resonance absorption peaks broaden less for same degree increase in fuel temperature, than at lower fuel temperatures.

b. As the moderator temperature increases the thermal utilization factor (f) predominates in its effect on Keff over the resonance escape probability (p).

c. At higher fuel temperatures the resonance absorption peaks broaden more for same degree increase in fuel temperature, than at lower fuel temperatures.

d. As the moderator density decreases thermal neutrons can not travel as far, causing the resonance escape probability (p) to decrease.

*ANSWER
1.13 (0.75)

a

*REFERENCE
WNP-2 Reactor Theory Text, IV. Reactivity Coefficients, pp. 14-19;
WNP-2 Learning Objectives, Reactor Theory (not numbered);
K/A 292004K105 (THEORY); Importance Rating ***2.9***;
K/A 292004K108 (THEORY); Importance Rating ***2.2***;

*QUESTION
1.14 (0.75)

MULTIPLE CHOICE (Select the Correct Response)

Figure 1.14 (Attached) illustrates the behavior of Xenon concentration (Nxe) as a function of reactor power and time.

Which of the following responses correctly describe the reason that Nxe dipped at point "B" on Figure 1.14?

a. As the power density increases thermal neutrons can not travel as far, causing the Nxe escape probability (p) to decrease over the next 4 to 6 hours.

b. As power is increased the burn out of Nxe by the higher neutron flux becomes predominant over the next 4 to 6 hours.

c. At higher fuel temperatures the resonance absorption peaks for Nxe broaden, trapping more Xenon over the next 4 to 6 hours.

d. As power is increased the build up Iodine by the higher neutron flux becomes predominant over the next 4 to 6 hours.

*ANSWER
1.14 (0.75)

b

*REFERENCE
WNP-2 Reactor Theory Text, VI. Xenon and Samarium, pp. 1-5;
WNP-2 Learning Objectives, Reactor Theory (not numbered);
K/A 292006K102 (THEORY); Importance Rating ***3.1***;

Figure 1.14

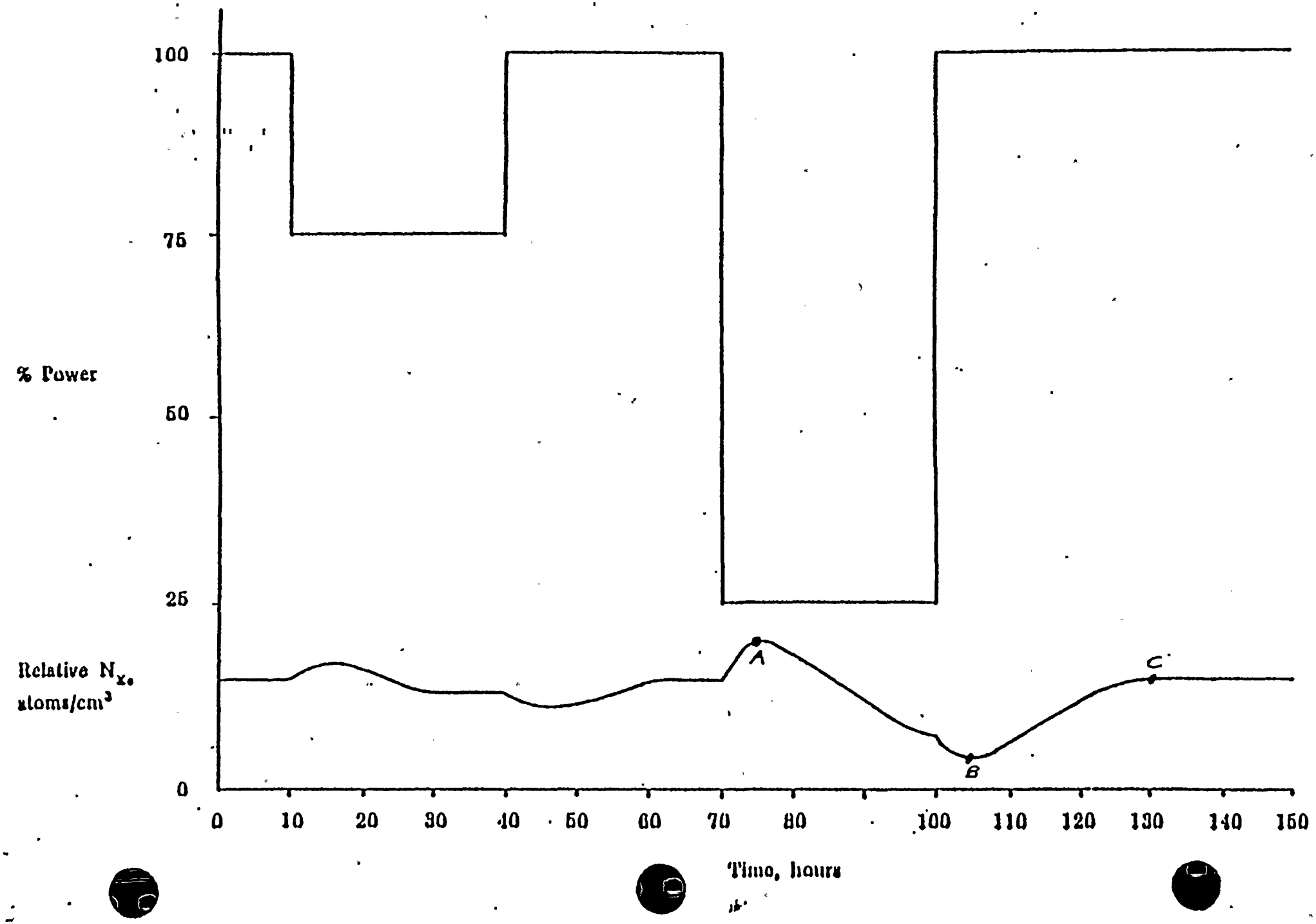
100
75
50
25
0
% Power
Relative N_{Xe}
atoms/cm^3
A
B
C
0
10
20
30
40
50
60
70
80
100
110
120
130
140
150
Time, hours

*QUESTION
1.15 (0.75)

MULTIPLE CHOICE (Select the Correct Response)

Figure 1.14 (previous) illustrates the behavior of Xenon concentration (Nxe) as a function of reactor power and time. Notice that (on Figure 1.14) as power is increased by a factor of four(4) at time = 100 hours, the corresponding Nxe DID NOT increase by a factor of four(4) at point "C" (on Figure 1.14). It would appear that Nxe equilibrium is not a linear function of reactor power.

Which one(1) of the following responses correctly describe this Nxe behavior illustrated by Figure 1.14, at point "C"?

a. Since neutron flux is directly proportional to power level, the burnout of Nex becomes more significant as power is increased.

b. At higher fuel temperatures the resonance absorption peaks for Nxe narrow, releasing more Xenon over the next 40 hours.

c. Since the production of Iodine is not directly proportional to power, the rate of Xenon production lags behind as power is increased.

d. At higher fuel temperatures the resonance absorption peaks for Nxe broaden, trapping more Xenon over the next 40 hours.

*ANSWER
1.15 (0.75)

a

*REFERENCE
WNP-2 Reactor Theory Text, VI. Xenon and Samarium, pp. 1-5;
WNP-2 Learning Objectives, Reactor Theory (not numbered);
K/A 292006K102 (THEORY); Importance Rating ***3.1***;

*QUESTION
1.16 (0.75)

MULTIPLE CHOICE (Select the Correct Response)

The reactor is subcritical with 10 counts per second (CPS) indicated on the selected Source Range channels. The reactor is hot, Xenon free, all rods inserted, with an initial Keff of 0.95. An edge rod is withdrawn, establishing a new steady count rate of 100 (still subcritical).

What is the new Keff?

a. 0.960

b. 1.005

c. 0.930

d. 0.995

*ANSWER
1.16 (0.75)

d. 0.99 (+/- 0.005)

CRo (1-Keff)o = CRi (1-Keff)i
Keffi = 1 - [CRo/CRi](1-Keff)i
Keffi = 1 - [10/100](1-0.95)
= 0.995

---

*REFERENCE
WNP-2 Reactor Theory Text, II. Neutron Physics, pp. 40-44;
WNP-2 Learning Objectives, Reactor Theory (not numbered);
K/A 292008K104 (THEORY); Importance Rating ***3.3***;

*QUESTION
1.17 (0.75)

MULTIPLE CHOICE (Select the Correct Response)

The Main Turbine is designed to operate with 2.5 inches Hg. absolute exhaust pressure. Assuming atmospheric pressure is at the standard 29 inches Hg. absolute:

What is the designed operating pressure in pounds per square inch absolute (psia)?

a. 15.97 psia

b. 4.93 psia

c. 1.27 psia

d. 31.5 psia

*ANSWER
1.17 (0.75)

c. 1.27 psia

2.5 in Hg x 14.7 psia/29 in Hg = 1.267 psia

---

*REFERENCE
WNP-2 GE HTFF Text, Ch. 1, pp. 32-33;
WNP-2 Systems, Main Turbine, pp. 1-33;
WNP-2 Learning Objectives, HTFF (R/Q) Ch.1;
K/A 293001K101 (THEORY); Importance Rating ***2.2***;

*QUESTION
1.18 (0.75)

MULTIPLE CHOICE (Select the Correct Response)

The Main Turbine is designed to trip at 22 inches Hg. vacuum. The control room condenser vacuum indicators read out in inches Hg. absolute. Assuming atmospheric pressure is at the standard 29 inches Hg. absolute:

What is the designed Main Turbine trip setpoint in inches Hg. absolute?

a. 4 in. Hg absolute

b. 51 in. Hg absolute

c. (-) 15 in. Hg absolute

d. 7 in. Hg absolute

*ANSWER
1.18 (0.75)

d. 7 in. Hg absolute

---

p(abs) = p(atm) - p(vacuum)

p(abs) = 29 - 22 = 7 in. Hg absolute

---

*REFERENCE
WNP-2 GE HTFF Text, Ch. 1, pp. 32-33;
WNP-2 Systems, Main Turbine, pp. 1-33;
WNP-2 Learning Objectives, HTFF (R/Q) Ch.1;
K/A 293001K101 (THEORY); Importance Rating ***2.2***;

*QUESTION
1.19 (0.75)

MULTIPLE CHOICE (Select the Correct Response)

Figure 1.19 (Attached) is a representation of WNP-2's steam cycle. The numerically labeled points identify the boundaries of a specific cycle process. Assuming no action by heater drain pumps, or process heating within the drain tanks:

Which one(1) of the following process boundaries on Figure 1.19 correctly represent third stage feedwater heater string heating?

a. 9 to 10

b. 10 to 11

c. 2 to 4

d. 4" to 5

*ANSWER
1.19 (0.75)

b.

*REFERENCE
WNP-2 GE HTFF Text, Ch. 6, pp. 68-72;
WNP-2 Systems, Feedwater, Figure 1;
WNP-2 Learning Objectives, HTFF (R/Q) Ch.6;
K/A 293004K102 (THEORY); Importance Rating ***1.8***;

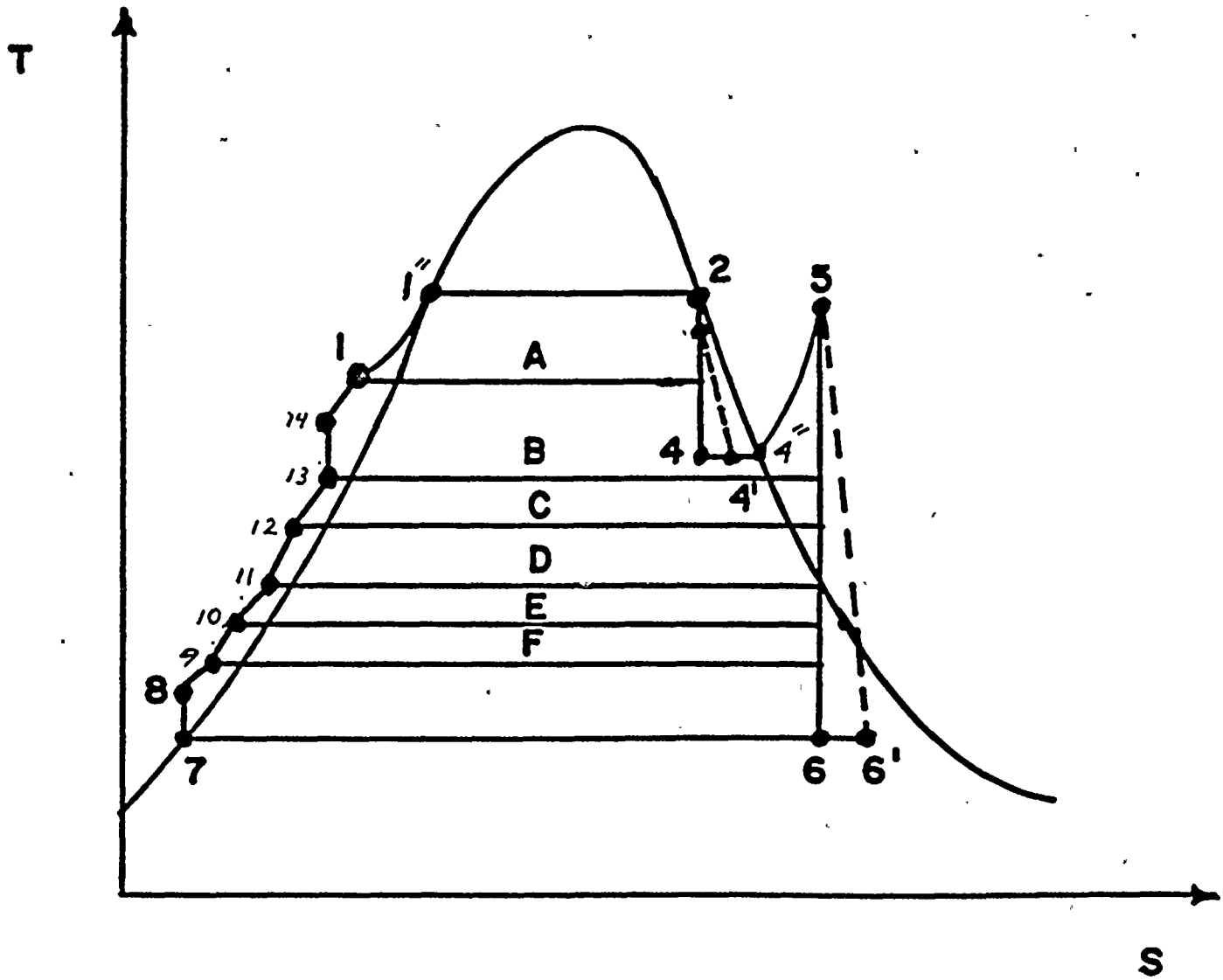

WNP-2 STEAM CYCLE

FIGURE 1.19

*QUESTION
1.20 (0.75)

MULTIPLE CHOICE (Select the Correct Response)

Figure 1.19 (previous question) is a representation of WNP-2's steam cycle. The numerically labeled points identify the boundaries of a specific cycle process. Assuming no action by heater drain pumps, or process heating within the drain tanks:

Which one(1) of the following process boundaries on Figure 1.19 correctly represent moisture separation and reheat by the MSR's?

a. 7 to 8

b. 1 to 1"

c. 2 to 4

d. 4" to 5

*ANSWER
1.20 (0.75)

d.

*REFERENCE
WNP-2 GE HTFF Text, Ch. 6, pp. 68-72;
WNP-2 Systems, Feedwater, Figure 1;
WNP-2 Learning Objectives, HTFF (R/Q) Ch.6;
K/A 293004K102 (THEORY); Importance Rating ***1.8***;

*QUESTION
1.21 (0.75)

MULTIPLE CHOICE (Select the Correct Response)

The reactor has been operating at 100% power for a month and has just experienced a SCRAM.

What is the approximate value of decay heat 10 seconds after the scram?

a. 33% - 38%

b. 4% - 8%

c. 15% - 20%

d. .1% - 2%

*ANSWER
1.21 (0.75)

b

*REFERENCE
WNP-2 Reactor Theory Text, Ch. 3, pp. 8-10;
WNP-2 Learning Objectives, Reactor Theory, Ch.3;
K/A 292008K125 (THEORY); Importance Rating ***2.8***;

*QUESTION
1.22 (0.75)

MULTIPLE CHOICE (Select the Correct Response)

The density of pure Water is "standardized" as 62.4 lbm/ft3, at a temperature of 25 degrees Celsius. Using the equation sheet provided:

What is this temperature in degrees Fahrenheit (F)?

a. 13 degrees F

b. 77 degrees F

c. 45 degrees F

d. 103 degrees F

*ANSWER
1.22 (0.75)

b

---

degrees F = 9/5 degrees C + 32

= 9/5 (25) + 32
= 77

---

*REFERENCE
WNP-2 GE HTFF Text, Ch. 1, pp. 15-17;
WNP-2 Learning Objectives, HTFF (R/Q) Ch.1;
K/A *** none found ***;

*QUESTION
1.23 (0.75)

MULTIPLE CHOICE (Select the Correct Response)

During a refueling/maintenance outage a test engineer installed two test manometers to the Floor Drain Collector Tank (FDR-TK-6), for testing tank level (Refer to attached Figure 1.23).

Which one(1) of the following responses correctly identifies the tank level?

a. 12 feet

b. 4 feet

c. 7 feet

d. 9 feet

*ANSWER
1.23 (0.75)

b.

*REFERENCE
WNP-2 GE HTFF Text, Ch. 1, pp. 19-33;
WNP-2 GE HTFF Text, Ch. 7, pp. 1-26;
WNP-2 Learning Objectives, HTFF (R/Q) Ch.1;
WNP-2 Learning Objectives, HTFF (R/Q) Ch.7;
K/A 293001K103, (Theory), IMPORTANCE RATING *2.5*;

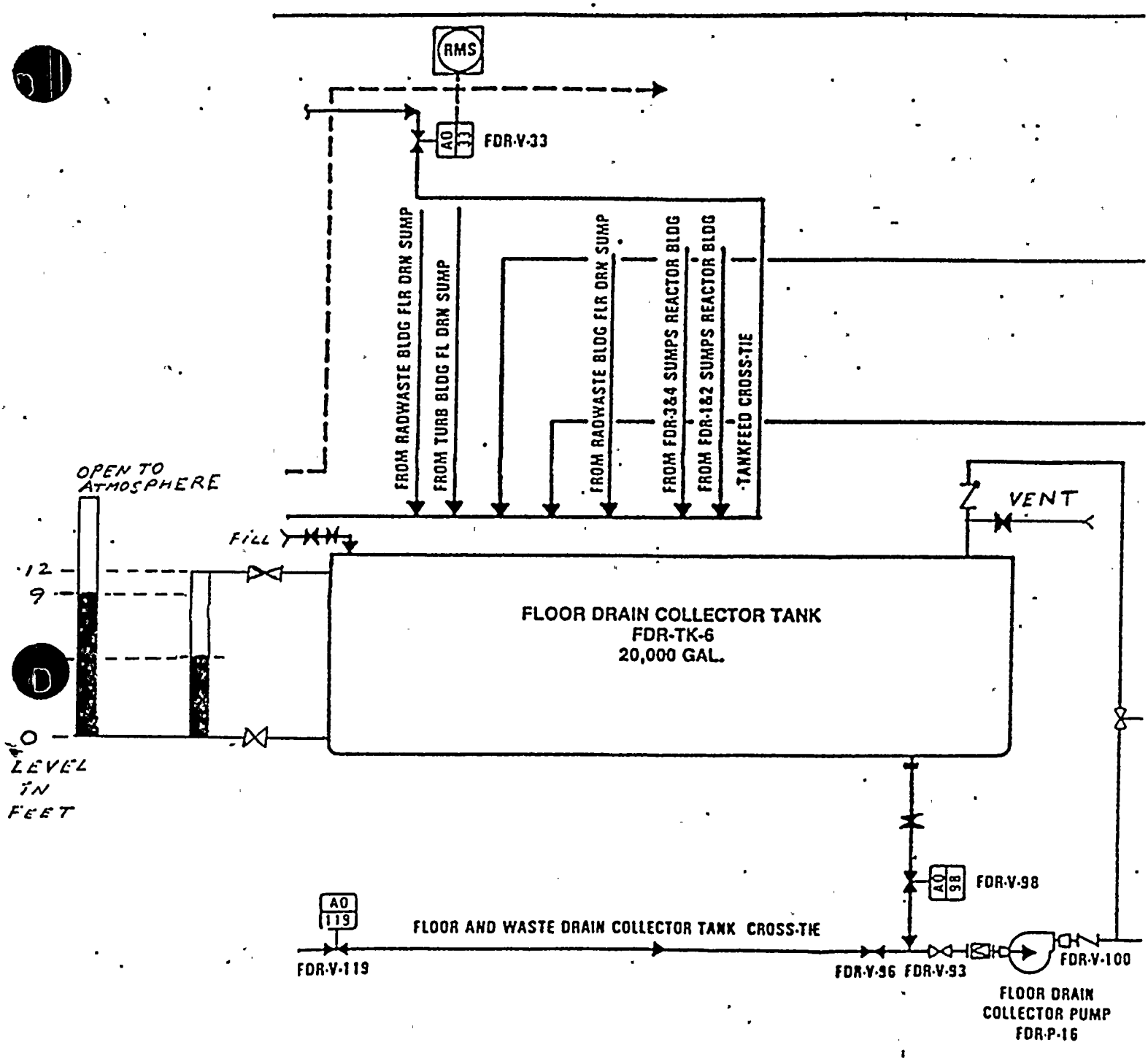
RMS
AO 33
FDR-V-33
FROM RADWASTE BLDG FLR DRN SUMP
FROM TURB BLDG FL DRN SUMP
FROM RADWASTE BLDG FLR DRN SUMP
FROM FDR-3&4 SUMPS REACTOR BLDG
FROM FDR-1&2 SUMPS REACTOR BLDG
TANKFEED CROSS-TIE
OPEN TO ATMOSPHERE
VENT
FILL
12
9
0
LEVEL IN FEET
FLOOR DRAIN COLLECTOR TANK
FDR-TK-6
20,000 GAL.
AO 98
FDR-V-98
AO 119
FLOOR AND WASTE DRAIN COLLECTOR TANK CROSS-TIE
FDR-V-119
FDR-V-96
FDR-V-93
FDR-V-100
FLOOR DRAIN COLLECTOR PUMP
FDR-P-16

FIGURE 1.23

*QUESTION
1.24 (0.75)

MULTIPLE CHOICE (Select the Correct Response)

During a refueling/maintenance outage a test engineer installed two test manometers to the Floor Drain Collector Tank (FDR-TK-6), for testing tank pressure (Refer to attached Figure 1.23).

Which one(1) of the following responses correctly identifies the tank pressure?

a. 9 feet of water gauge pressure.

b. 5 feet of water gauge pressure.

c. 13 feet of water absolute pressure.

d. 4 feet of water absolute pressure.

*ANSWER
1.24 (0.75)

b.

*REFERENCE
WNP-2 GE HTFF Text, Ch. 1, pp. 19-33;
WNP-2 GE HTFF Text, Ch. 7, pp. 1-26;
WNP-2 Learning Objectives, HTFF (R/Q) Ch.1;
WNP-2 Learning Objectives, HTFF (R/Q) Ch.7;
K/A 293001K103, (Theory), IMPORTANCE RATING *2.5*;

*QUESTION
1.25 (0.75)

MULTIPLE CHOICE (Select the Correct Response)

A motor driven centrifugal pump is being used to mix the precoat tank for one of the condensate filter/demineralizers (F/D). This new experimental model has two speeds, 1200 rpm and 1800 rpm. The pump is running at 1800 rpm. The local panel instrumentation indicates that the pump is running at full power (500 Watts). The pump is shifted to 1200 rpm by the auto-control timers.

What is the approximate indicated power level (in Watts) after pump speed stabilizes at 1200 rpm?

a. 150 Watts

b. 220 Watts

c. 335 Watts

d. 250 Watts

*ANSWER
1.25 (0.75)

a. [power decreases by a factor of (2/3)^3, about .3]

*REFERENCE
WNP-2 GE HTFF Text, Ch. 7, pp. 110-123;
WNP-2 Learning Objectives, HTFF (R/Q) Ch.7;
K/A 293006K116, (Theory), IMPORTANCE RATING *2.1*;

*QUESTION
1.26 (0.75)

MULTIPLE CHOICE (Select the Correct Response)

A motor driven centrifugal pump is being used to mix the precoat tank for one of the condensate filter/demineralizers (F/D). This new experimental model has two speeds, 1200 rpm and 1800 rpm. The pump is running at 1800 rpm. The local panel instrumentation indicates that the pump's discharge pressure is approximately 150 psig, running at full power. The pump is shifted to 1200 rpm by the auto-control timers.

What is the new indicated discharge pressure (psig) after the pump's speed stabilizes at 1200 rpm?

a. 75 psig

b. 45 psig

c. 67 psig

d. 99 psig

*ANSWER
1.26 (0.75)

c. [head decreases by a factor of (2/3)^2, about .44]

*REFERENCE
WNP-2 GE HTFF Text, Ch. 7, pp. 110-123;
WNP-2 Learning Objectives, HTFF (R/Q) Ch.7;
K/A 293006K116, (Theory), IMPORTANCE RATING *2.1*;

*QUESTION
1.27 (0.75)

MULTIPLE CHOICE (Select the Correct Response)

A motor driven centrifugal pump is being used to mix the precoat tank for one of the condensate filter/demineralizers (F/D). This new experimental model has two speeds, 1200 rpm and 1800 rpm. The pump is running at 1800 rpm. The local panel instrumentation indicates that the pump's flow rate is approximately 500 gpm, running at full power. The pump is shifted to 1200 rpm by the auto-control timers.

What is the new indicated flow rate (gpm) after the pump's speed stabilizes at 1200 rpm?

a. 335 gpm

b. 150 gpm

c. 750 gpm

d. 220 gpm

*ANSWER
1.27 (0.75)

a. [~~head~~ flow decreases by a factor of (2/3), about .67]

*REFERENCE
WNP-2 GE HTFF Text, Ch. 7, pp. 110-123;
WNP-2 Learning Objectives, HTFF (R/Q) Ch.7;
K/A 293006K116, (Theory), IMPORTANCE RATING *2.1*;

*QUESTION
1.28 (0.75)

MULTIPLE CHOICE (Select the Correct Response)

The bases for establishing thermal limits for both normal operation and transient events is to maintain the integrity of the fuel cladding. One of these thermal limits is Linear Heat Generation Rate (LHGR).

Which one(1) of the following responses correctly describes the limiting condition for LHGR?

a. A cladding temperature 2200 degrees F.

b. 1% corrosion of the fuel cladding due to high stress.

c. Onset of Transition Boiling around the fuel cladding.

d. 1% plastic strain on the cladding.

*ANSWER
1.28 (0.75)

d.

*REFERENCE
WNP-2 GE HTFF Text, Ch. 9, pp. 68-70;
WNP-2 Learning Objectives, HTFF (R/Q) Ch.9;
K/A 293009K107, (Theory), IMPORTANCE RATING *2.8*;
K/A 293009K108, (Theory), IMPORTANCE RATING *3.0*;

*QUESTION
1.29 (0.75)

MULTIPLE CHOICE (Select the Correct Response)

The bases for establishing thermal limits for both normal operation and transient events is to maintain the integrity of the fuel cladding. One of these thermal limits is Minimum Critical Power Ratio (MCPR).

Which one(1) of the following responses correctly describes the limiting condition for MCPR?

a. A cladding temperature 2200 degrees F.

b. 1% corrosion of the fuel cladding due to high stress.

c. Onset of Transition Boiling around the fuel cladding.

d. 1% plastic strain on the cladding.

*ANSWER
1.29 (0.75)

c.

*REFERENCE
WNP-2 GE HTFF Text, Ch. 9, pp. 68-70;
WNP-2 Learning Objectives, HTFF (R/Q) Ch.9;
K/A 293009K107, (Theory), IMPORTANCE RATING *2.8*;
K/A 293009K108, (Theory), IMPORTANCE RATING *3.0*;

*QUESTION
1.30 (0.75)

MULTIPLE CHOICE (Select the Correct Response)

After the withdraw of a "shallow" rod at a stable reactor power in the power range, it is observed that the power level remains unchanged.

What happened to the overall "Void Fraction" of the core after the withdraw of the "shallow" control rod?

a. Void Fraction decreased slightly.

b. Void Fraction increased significantly.

c. Void Fraction increased slightly.

d. Void Fraction remains the same.

*ANSWER
1.30 (0.75)

c.

*REFERENCE
WNP-2 Reactor Theory Text, Ch. 5, pp. 10;
WNP-2 Learning Objectives, Reactor Theory Ch.5;
K/A 292008K119, (Theory), IMPORTANCE RATING *3.1*;

****
END OF SECTION 1

SECTION 2

Plant Design, Including Emergency and Safety Systems

*QUESTION
2.01 (2.0)

The Control Rod blades and associated Drive Mechanisms (CRDM's) are designed to provide adequate negative reactivity to shutdown the reactor from any normal or abnormal condition. A neutron absorbing element is contained within the stainless steel tubes of each control rod blade. These tubes are enclosed in a stainless steal "sheath', which form the blade's structure. A "velocity limiter" casting at the base of each control rod is designed to mitigate the consequences of a certain "event".

a. What is this neutron absorbing element? (0.5)

b. Why are holes drilled in the stainless steel sheaths containing the control rod blade tubes? (0.5)

c. What is the "event" that the velocity limiter was designed to mitigate the consequences of? (0.5)

d. How many bottom entry CRDM's are designed for WNP-2's reactor? (0.5)

*ANSWER
2.01 (2.0)

a. Boron (Carbide) (or, B10) (0.5)

b. Allows reactor water (coolant,etc.) to cool the Boron tubes. (0.5)

c. (To limit the free fall of) a blade which has been uncoupled from its drive. (0.5)

d. 185 (+/- 1) (0.5)

*REFERENCE
WNP-2 Systems, CRDM, pp. 1-3;
WNP-2 Systems Learning Objectives, CRDM, 3&5;
K/A 201003K401, Importance Rating ***2.9***;
K/A 201003K401, Importance Rating ***2.9***;
K/A 201003K004 (Generic), Importance Rating ***3.5***;

*QUESTION
2.02 (2.5)

The Control Rod Hydraulic System must operate properly to facilitate the maximum scram insertion time limits of WNP-2's Technical Specifications. Attached Figure 2.02 illustrates the Control Rod Hydraulic System and one associated Hydraulic Control Unit (HCU). HCU manual withdraw isolation valve (102), HCU manual insert isolation valve (101), and HCU manual Scram Discharge Header (SDV) isolation valve (112) are circled for your reference. System Operating Procedure PPM 2.1.1 (CRD) cautions that anytime valve 101 is open and the accumulator is charged, valves 102 and 112 must be open. Valves 120, 121, 122, and 123 are the four(4) "directional control valves".

a. What is the power supply (bus identifier) for CRD pump 1A? (0.5)

b. What is the Tech. Spec. maximum scram time (sec) for each control rod from the fully withdrawn position to notch position 6? (0.5)

c. Which one(1) of the four(4) directional control valves (by valve number) briefly remains open to allow a CRD to "settle" after an insert or withdraw cycle? (0.75)

d. What is the reason for the PPM 2.2.1 precaution for HCU isolation valves 101, 102, and 112? (0.75)

*ANSWER
2.02 (2.5)

a. SM-7 (0.5)

b. 7 seconds (0.5)

c. 120 (0.75)

d. To prevent over pressurization (damage) of the CRDM. (0.75)

*REFERENCE
WNP-2 Systems, CRDH, pp. 22-32;
WNP-2 PPM 2.1.1, pp. 2;
WNP-2 PPM Learning Objectives, 1,2, &3;
WNP-2 Systems Learning Objectives, CRDH, 4,8,11,13;
WNP-2 Tech Spec Learning Objectives, 1&3;
K/A 201001K410, Importance Rating ***3.1***;
K/A 201001K004 (Generic), Importance Rating ***3.7***;
K/A 201001K007 (Generic), Importance Rating ***3.6***;

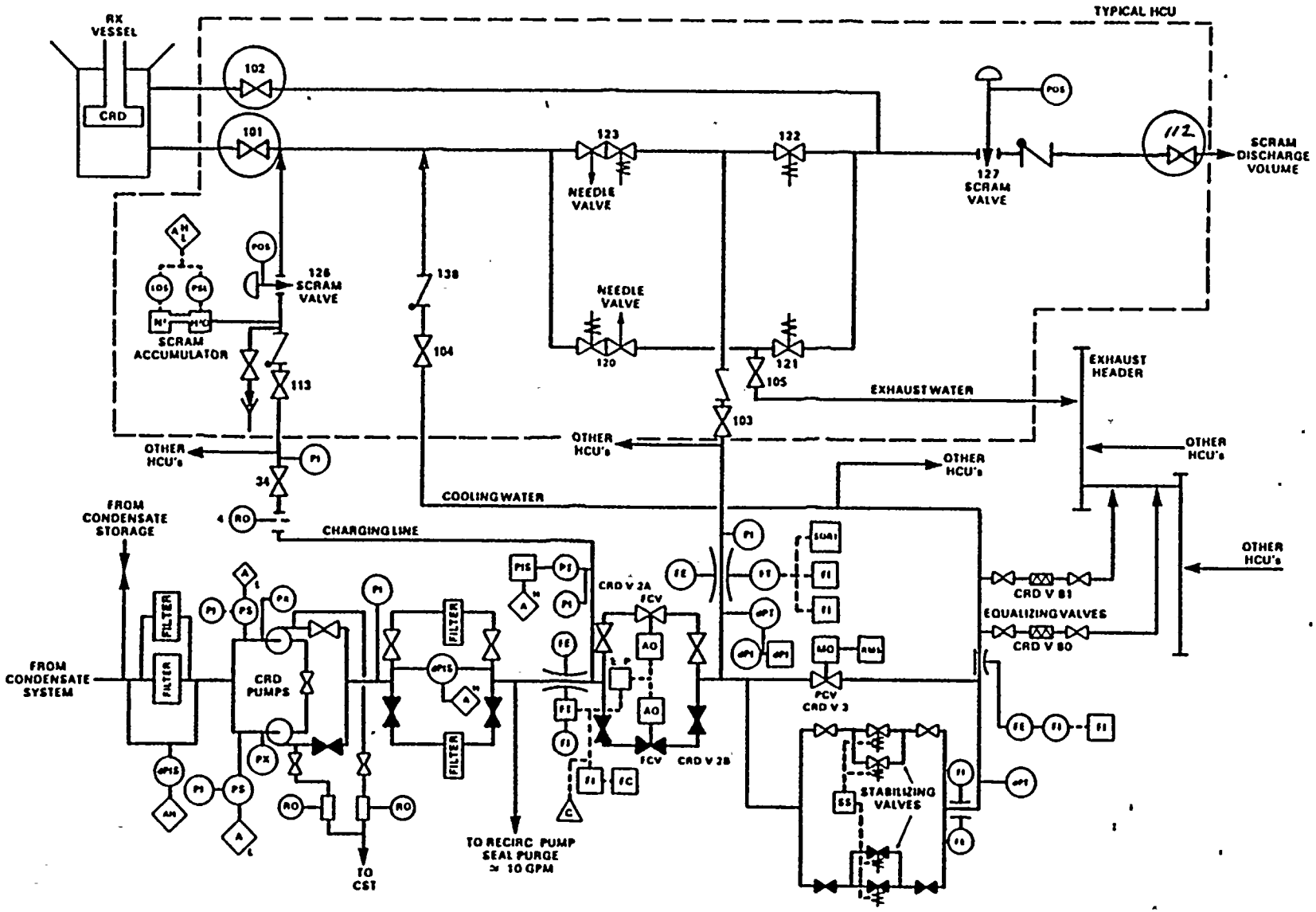

FIGURE. CONTROL ROD DRIVE HYDRAULIC SYSTEM

2.02

*QUESTION
2.03 (2.5)

The design bases of the Standby Liquid Control (SLC) system is to provide backup reactivity control capability if the control rod drive system cannot shutdown the reactor. To ensure that the SLC can perform its intended function certain design specifications must be periodically verified by the operator. Assuming the plant is in OPERATIONAL CONDITION 1:

a. What is the power supply (MCC identifier) for SLC Pump SLC-P-1B? (0.5)

b. What SLC injection flow rate (gpm) would you expect to see on the reactor control board upon an SLC initiation from standby, with both pumps running? (0.75)

c. What is the name of the specific chemical which ensures that a SLC injection will add negative activity to the reactor? (0.5)

d. Why is the SLC tank heated? (0.75)

*ANSWER
2.03 (2.5)

a. MC-8B (0.5)

b. 86 (+/- 6) gpm (43gpm each pump in parallel) (0.75)

c. sodium pentaborate (0.5)

d. To maintain sodium pentaborate (boron) in solution (to maintain the required % weight of solution concentration) (0.75)

*REFERENCE
WNP-2 Systems, SLC, pp. 1-16;
WNP-2 PPM 2.4.1, pp. 6;
WNP-2 Systems Learning Objectives, SLC 4,12, 14;
WNP-2 PPM Learning Objectives, 1,2, &3;
WNP-2 Tech Spec Learning Objectives, 1&3;
K/A 211000K408, Importance Rating ***4.2***;
K/A 211000K004 (Generic), Importance Rating ***4.1***;
K/A 211000K007 (Generic), Importance Rating ***4.0***;

*QUESTION
2.04 (3.0)

The Reactor Water Cleanup (RWCU) system has three(3) major functions. Two(2) of these are:

1. Maintain reactor water quality by removing soluble and insoluble impurities.

2. Maintaining RPV water inventory during startup and shutdown.

Whenever the reactor recirculation pumps are secured, Operating Procedure PPM 2.2.3 (RWCU) cautions that the RPV bottom drain valve (RWCU-V-101) should be open.

a. What is the single power supply (MCC identifier) for both RWCU Pumps "A" and "B"? (0.5)

b. What are the two(2) types of RWCU system components that are cooled by the Reactor Closed Cooling Water (RCCW) system? (0.5 pts. each) (1.0)

c. What is the one(1) other function of the RWCU system? (0.5)

d. What ~~are~~ is the ~~two(2)~~ reasons for the PPM 2.2.3 precaution on maintaining RWCU-V-101 open with no forced recirculation? ~~(0.5 pts. each)~~ (1.0)

*ANSWER
2.04 (3.0)

a: MC-8C (0.5)

b.
1. NRHX (shell side) (0.5)
2. RWCU Pumps (coolers) (0.5)

c: The system removes radiation from the RCS (produced by corrosion and fission products). (0.5)
ALSO ACCEPT: ALTERNATE METHOD FOR SLC INJECTION.

d. ~~1.~~ To minimize thermal stratification. ~~(0.5)~~ (1.0)
~~2.~~ (To maximize bottom head circulation) ~~(0.5)~~

*REFERENCE
WNP-2 Systems, RWCU, pp. 1-23;
WNP-2 PPM 2.2.3, pp. 4;
WNP-2 Systems Learning Objectives, RWCU 1,7,8,9;
WNP-2 PPM Learning Objectives, 1,2, &3;
K/A 204000K301/2, Importance Rating ***3.1/3.2***;
K/A 204000K001 (Generic), Importance Rating ***3.3***;
K/A 204000K004 (Generic), Importance Rating ***3.3***;
WNP-2 PPM 5.1.3, PAGE 10

*QUESTION
2.05 (0.75)

MULTIPLE CHOICE (Select the Correct Response):

The two Reactor Recirculation (RRC) pump motor current (Amps) indications are displayed on control room panel P602. Operating Procedure PPM 2.2.1 (RRC), identifies the RRC pump motor current limit.

What is the RRC pump motor current limit?

a. 1.0 kiloamp

b. 441 amps

c. 661 amps

d. 241 amps

*ANSWER
2.05 (0.75)

c.

*REFERENCE
WNP-2 Systems, RRC, pp. 22-26;
WNP-2 PPM 2.2.1, pp. 4;
WNP-2 PPM Learning Objectives, 1,2, &3;
K/A 202001A401, Importance Rating ***3.7***;
K/A 202001K001 (Generic), Importance Rating ***3.9***;
K/A 202001K004 (Generic), Importance Rating ***3.8***;

*QUESTION
2.06 (0.75)

MULTIPLE CHOICE (Select the Correct Response):

The two Reactor Recirculation (RRC) pump motors have motor winding temperature limits for continuous and intermittent operation. These temperatures are monitored by local temperature elements, which input to applicable control room alarms. Operating Procedure PPM 2.2.1 (RRC), identifies these RRC pump motor temperature limits.

What is the RRC pump motor continuous operation temperature limit?

a. 428 degrees F

b. 248 degrees F

c. 668 degrees F

d. 48 degrees F

*ANSWER
2.06 (0.75)

b.

*REFERENCE
WNP-2 Systems, RRC, pp. 22-26;
WNP-2 PPM 2.2.1, pp. 4;
WNP-2 PPM Learning Objectives, 1,2, &3;
K/A 202001A114, Importance Rating ***2.4***;
K/A 202001A401, Importance Rating ***3.7***;
K/A 202001K001 (Generic), Importance Rating ***3.9***;
K/A 202001K004 (Generic), Importance Rating ***3.8***;

*QUESTION
2.07 (3.0)

The Anticipated Transient Without Scram (ATWAS) and Recirculation Pumps Trip (RPT) "events" each have a unique effect on the Recirculation Pumps. Both of these "events" achieve the same function in overall reactor control.

a. What is the effect on the Recirculation Pumps that is caused by an ATWAS event? (0.5)

b. What is the effect on the Recirculation Pumps that is caused by an RPT event? (0.5)

c. How do both of these "events" achieve the same function in overall reactor control? (1.0)

d. What is the reason that an RPT event is worse ("worst case") at End of core Life (EOL)? (1.0)

*ANSWER
2.07 (3.0)

a. Both Recirculation Pumps Trip (both 60 Hz and 15 Hz supply breakers to the RR pump motors trip open). (0.5)

b. The Recirculation Pumps shift to slow speed (15 Hz). (0.5)

c. (by reducing core flow - trip or runback) negative reactivity is added to the core. (1.0)

d. The negative reactivity added by control rods for the first inches of travel is less at EOL. (1.0)
(RODS ARE FURTHER OUT OF THE CORE AND REQUIRE A LONGER TRAVEL TIME.)

*REFERENCE
WNP-2 Systems, RRC, pp. 12;
WNP-2 Systems Learning Objectives, RRC 8&9;
K/A 202001K413/414, Importance Rating ***3.7/4.0***;

WNP-2 SYSTEMS, RRC, PP. 13.

*QUESTION
2.08 (3.0)

The Reactor Closed Cooling Water (RCCW) system is a closed loop system which supplies cooling to auxiliary nuclear plant equipment located in the following areas:

1. Primary Containment building

2. Reactor building

3. Radwaste building

The RCCW surge tank provides immediate makeup water for the system, while providing a surge volume.

a. What building is the RCCW surge tank located? (0.25)

b. What system provides normal makeup to the RCCW surge tank? (0.25)

c. What are the three(3) systems (systems only) that are serviced by RCCW in the Primary Containment building? (0.5 pts. each)(1.5)

d. What design feature of the RCCW system prevents potential contamination from RCCW process loads from reaching the environment? (1.0)

*ANSWER
2.08 (3.0)

a. Reactor Building (0.25)

b. Demineralized Water System(DW) (0.25)

c.
1. Drywell Coolers (CRA upper&lower coolers) (Drywell HVAC) (0.5)
2. RRC (pump motors/seals/motor bearings) (0.5)
3. Drywell sump EDR Heat Exchanger (EDR) (0.5)

d. RCCW system operating pressure is lower than the pressure of the TSW that cools the RCCW heat exchangers (and lower than the pressure of the load components it cools). (1.0)

*REFERENCE
WNP-2 Systems, RCC, pp. 1-4;
WNP-2 Systems Learning Objectives, RCC 1,2,3,7;
K/A 223001K210, Importance Rating ***2.7***;
K/A 223001K601, Importance Rating ***3.6***;

*QUESTION
2.09 (3.0)

The main purpose of the drywell is to contain the effects of a LOCA and to direct the release to the suppression pool. There are three(3) specific design functions of the suppression pool. One(1) of these is:

"To contain a reservoir of water capable of condensing the steam flow from the drywell"

Both drywell and suppression pool temperatures and pressures are indicated on control room board P601.

a. What are the other two(2) design functions of the suppression pool? (0.5 pts.each) (1.0)

b. What is the designed internal ("over") pressure (psig) of the Primary Containment? (0.5)

c. What is the designed external ("under") pressure (psig) of the Primary Containment? (0.5)

d. What is the designed (maximum) temperature (degrees F) of the Drywell? (0.5)

e. What component seals the Drywell between the containment shell and the reactor vessel top head flange? (0.5)

*ANSWER
2.09 (3.0)

a.

1. Collect noncondensible gases (in the free air space). (0.5)

2. Serve as a (principle) source of water for ECCS (RHR,HPCS,LPCS, etc...) (0.5)

ALSO ACCEPT: TO CONDENSE SRV. BLOWDOWN. (.5)(1.0 MAX)

b. 45 (+/- 2) psig (0.5)

c. 2 (+/- .2) psig (0.5)

d. 340 (+/- 5) degrees F (0.5)

e. (inner) refueling bellows (seal) (0.5)

*REFERENCE
WNP-2 Systems, PRI CONT, pp. 1-9;
WNP-2 Systems Learning Objectives, PRI CONT 3,9.10e;
K/A 223001K401, Importance Rating ***3.7***;
K/A 223001K302/303, Importance Rating ***3.3/3.4***;
K/A 223001K101, Importance Rating ***3.7***;

*QUESTION
2.10 (2.5)

The Standby Gas Treatment (SGT) system's primary function is to minimize the "exfiltration" from the reactor building in the event of an accident in the primary containment or reactor building. Subsequently, the SGT system is designed to maintain the secondary containment at a certain negative pressure in accordance with Technical Specification LCO 3.6.5.1 (Secondary Containment). Air can enter the SGT system from either the primary containment or the SGT room (reactor building), depending on the initiation (FAZ) signal condition or manual operation.

a. What is the Secondary Containment pressure (inch water gauge-wg) required for secondary containment integrity? (0.5)

b. What is the one(1) other suction source (system name) for the SGT system? (0.5)

c. What is the SGT minimum design flow rate (CFM) necessary to maintain the required Secondary Containment pressure under accident conditions? (0.5)

d. What is the power supply (MCC identifier) for SGT fan FN-1A-2? (0.5)

e. What is the total capacity (CFM) of both trains of the SGT system together? (0.5)

*ANSWER
2.10 (2.5)

a. 0.25 (+/- .02)inch wg (0.5)

b. Main Steam Leakage Control (MSLC) (0.5)

c. 2240 (+/- 100)cfm (0.5)

d. MC-8B (MC-8B-B) (0.5)

e. 8000 (+/- 200)cfm (0.5)

*REFERENCE
WNP-2 Systems, SGT, pp. 1-32;
WNP-2 Systems Learning Objectives, SGT 1,2,4,10;
K/A 290001K104, Importance Rating ***3.7***;
K/A 290001G004, Importance Rating ***3.8***;
K/A 290001G007, Importance Rating ***3.8***;

*QUESTION
2.11 (2.0)

WNP-2 is serviced by three emergency diesel generators (DG1, DG2, and DG3) which makeup the plants "Standby AC Power System". Output current, voltage, and power are indicated on the appropriate control room panels for each DG. All DG's have there own fuel oil storage tanks and day tanks, which are kept filled to capacity.

a. What is the continuous service rating (kW) for both DG's 1&2? (0.5)

b. What is the continuous service rating (kW) for DG 3? (0.5)

c. What is the capacity (gallons) of DG1's fuel oil storage tank? (0.25)

d. What is the capacity (gallons) of DG2's day tank? (0.25)

e. How long (days) is DG1 designed to run at 100% generator rating, with it's fuel storage and day tanks initially full to capacity? (0.5)

*ANSWER
2.11 (2.0)

a. 4400 (+/- 40)kW (0.5)

b. 2600 (+/- 40)kW (0.5)

c. 63,500 (+/- 500)gallons (0.25)

d. 3000 (+/- 100)gallons (0.25)

e. 7 (+/- .5)days (0.5)

*REFERENCE
WNP-2 Systems, DG, pp. 1-17;
WNP-2 Systems Learning Objectives, DG 1,2,4,;
K/A 262001K406, Importance Rating ***3.6***;
K/A 262001K302, Importance Rating ***3.8***;

****
END OF SECTION 2

SECTION 3

Instruments and Controls

*QUESTION
3.01 (3.0)

Attached Figure 3.1 illustrates a portion of the "Full Core Display" on the vertical section of control room panel P603. This portion of the panel provides the operator with information on the status of the control rods and incore chambers (LPRM's). Each type of indicator light (labeled 1-5 on Figure 3.1) illuminates in one(1) of the following colors:

Blue	Green	Amber
Red	White	

Assuming that the indicator lamp is lit:

a. What is the color of the "ACCUM" indication, labeled "1" on Figure 3.1? (0.5)

b. What is the color of the "SCRAM" indication, labeled "4" on Figure 3.1? (0.5)

c. What is the color of the "Full In" indication, labeled "3" on Figure 3.1? (0.5)

d. What is the color of the "Drift" indication, labeled "2" on Figure 3.1? (0.5)

e. What is the color of the "DNSC" indication, labeled "5" on Figure 3.1? (0.5)

f. What is the color of the "Full Out" indication, labeled "2" on Figure 3.1? (0.5)

*ANSWER
3.01 (3.0)

a. amber (0.5)
b. blue (0.5)
c. green (0.5)
d. red (0.5)
e. white (0.5)
f. red (0.5)

*REFERENCE
WNP-2 Systems, RMCS, pp. 1-8;
WNP-2 Systems Learning Objectives, RMCS 4, 13;
K/A 201002A405, Importance Rating ***3.1***
K/A 201002G015, Importance Rating ***3.8***

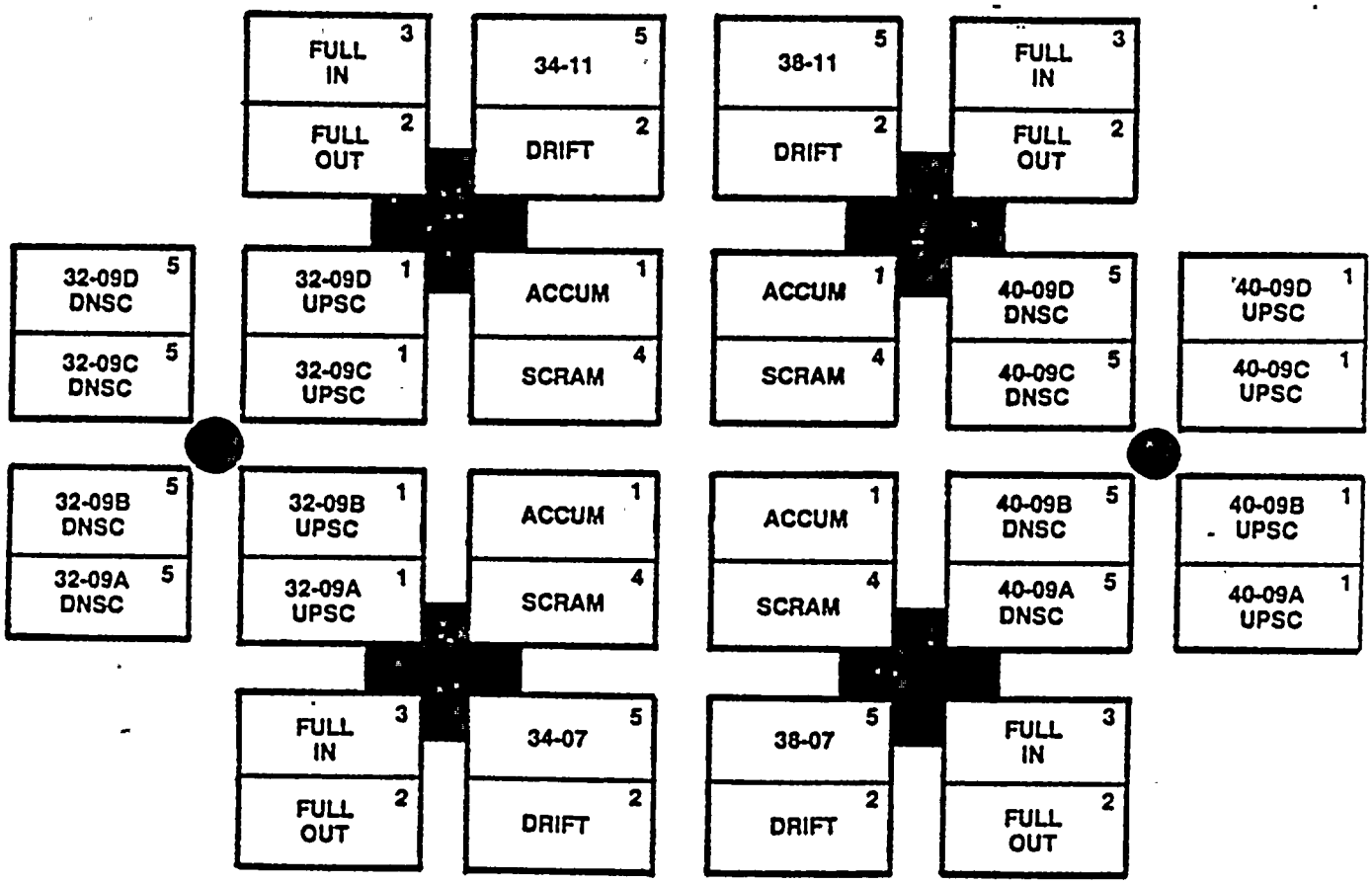

830780.2LT
SEPT 1986
RMCS

FIGURE 3.1 FULL CORE DISPLAY

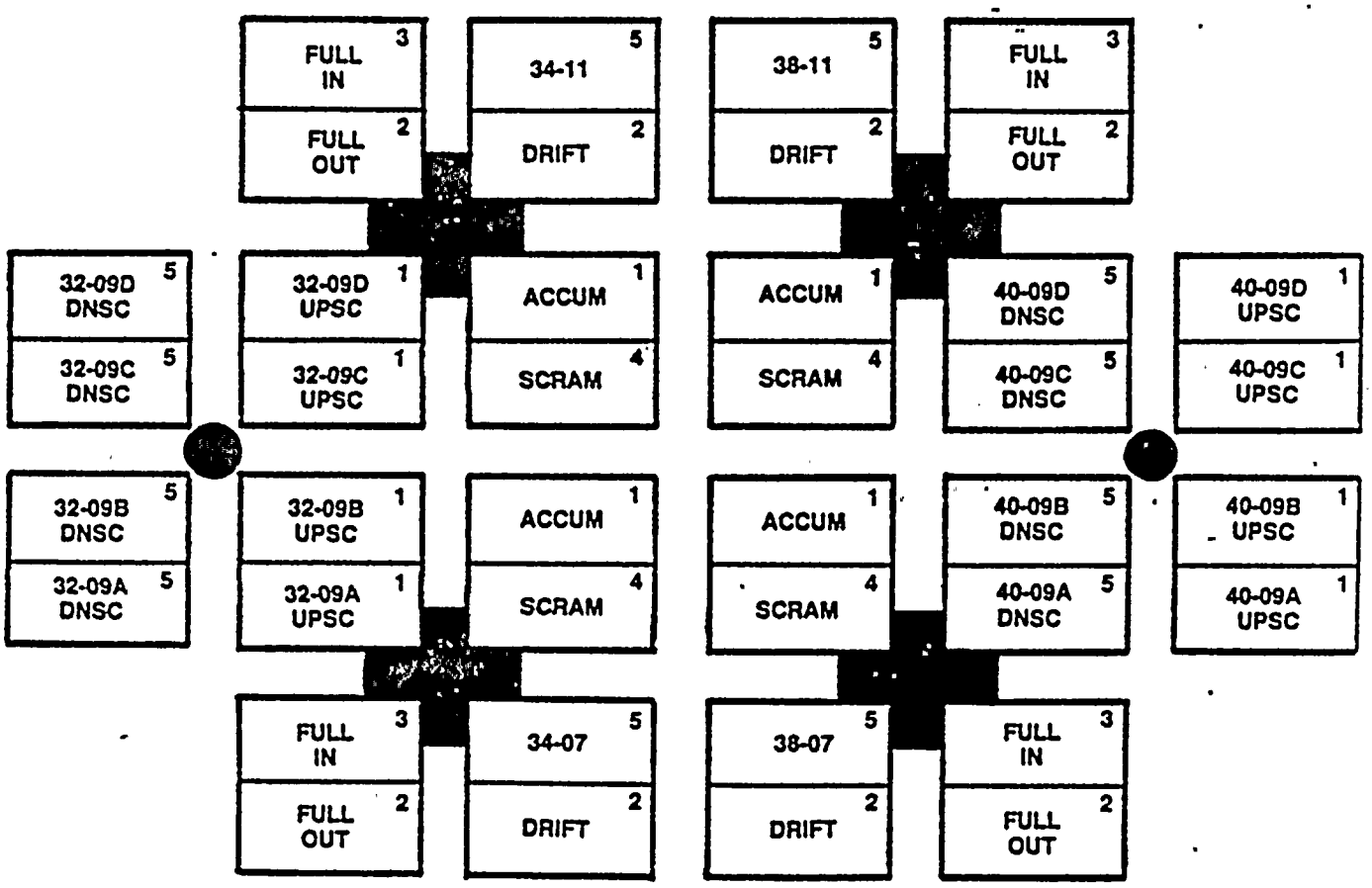

1 — AMBER
2 — RED
3 — GREEN
4 — BLUE
5 — WHITE

KEY

830780.2LT
SEPT 1986
RMCS

FIGURE 3.1 FULL CORE DISPLAY

*QUESTION
3.02 (2.0)

The previous Figure 3.1 illustrates a portion of the "Full Core Display" on the vertical section of control room panel P603. This portion of the panel provides the operator with information on the status of the control rods and incore chambers (LPRM's). Each type of indicator light (labeled 1-5 on Figure 3.1) has a specific meaning. For example; one(1) of the two(2) conditions that would activate an "ACCUM" indicator is a condition of high accumulator block water level (150 cc) for that associated HCU.

a. What is the other condition that would activate an "ACCUM" indicator lamp (include the setpoint)?
(0.5 pts. for condition)
(0.25 pts. for setpoint) (0.75)

b. What condition would activate an "UPSC" indicator lamp? (0.5)

c. What condition would activate an "DNSC" indicator lamp? (0.5)

d. What do the numbers labeled "32-09D, 40-09A, 40-09B, etc." indicate? (0.25)

*ANSWER
3.02 (2:0)

a. 1. low N2 pressure in affected accumulator. (0.5)
2. 950 (+/-15) psig (0.25)

b. LPRM hi (LPRM reached 100 watts/cm2) (0.5)

c. LPRM downscale (LPRM reached 5 watts/cm2) (0.5)

d. ~~rod~~ LPRM (STRING) coordinates (core position). (0.25)

*REFERENCE
WNP-2 Systems, RMCS, pp. 1-8;
WNP-2 Systems Learning Objectives, RMCS 4,8, 13;
K/A 201002A405, Importance Rating ***3.1***
K/A 201002G015, Importance Rating ***3.8***

*QUESTION
3.03 (3.0)
RPV level is measured from "instrument zero". Each "type" of RPV level detector used at WNP-2 is calibrated for a given temperature range of the reactor coolant and instrument reference leg. Therefore, the level indication from these various instruments is only valid for specific operating conditions. Any deviation from these conditions will introduce errors in the level measurement. For example; the "Control Range" type of RPV level instrumentation is used for normal operating conditions. The indicating range for the "Control Range" is 0 to 60 inches from "instrument zero".

a. What is the range (inches) of the "Fuel Zone" type of level instrumentation? (0.25)

b. What is the reactor condition for which the "Fuel Zone" type of level instrumentation is calibrated? (0.25)

c. What is the range (inches) of the "Wide Range" type of level instrumentation? (0.25)

d. What are the two(2) specific reactor conditions for which the "Wide Range" type of level instrumentation is calibrated? (0.5 pts. each) (1.0)

e. What is the level (inches) of the Top of Active Fuel (TAF) from instrument zero? (0.25)

f. Why is indicated "Narrow Range" RPV water level about 7 inches higher than actual water level at 100% power? (1.0)

*ANSWER
3.03 (3.0)

a. -110 to -310 (must have entire range correct) (0.25)

b. (post) accident (0.25)

c. +60 to -150 (must have entire range correct) (0.25)

d. 1. (power) operating conditions (0.5)
2. no jet pump flow (ATWAS RR pump trip) (0.5)

e. -161 (+/- 1) (0.25)

f. The steam flow through the (steam dryer/separator) assembly will cause a pressure dp of about 7 inches H2O. (1.0)

*REFERENCE
WNP-2 Systems, NBI, pp. 3-20, Figure 8;
WNP-2 Systems Learning Objectives, NBI 5,6,7,13;
K/A 216000K411, Importance Rating ***4.0***;
K/A 216000K004, Importance Rating ***3.6***;
K/A 216000K012, Importance Rating ***3.7***;

*QUESTION
3.04 (1.0)

The performance of the RPV level instrumentation depends on the operational condition of the plant, the "type" of instrumentation (shutdown range, narrow range , wide range, etc.), and where the particular type of instrumentation functionally detects level.

a. What is the only "type" of level instrumentation that functionally detects level inside the core shroud? (0.5)

b. Where, relative to "instrument zero", is the "Narrow Range" variable leg instrument tap (inches). (0.5)

*ANSWER
3.04 (1.0)

a. Fuel Zone (0.5)

b. 0 inches (at instrument zero) (0.5)

*REFERENCE
WNP-2 Systems, NBI, pp. 3-20, Figure 8;
WNP-2 Systems Learning Objectives, NBI 5,6,7,13;
K/A 216000K411, Importance Rating ***4.0***;
K/A 216000K501, Importance Rating ***3.1***;
K/A 216000K004, Importance Rating ***3.6***;
K/A 216000K012, Importance Rating ***3.7***;

*QUESTION
3.05 (2.5)

RPV pressure is sensed in the steam dome area, using the same instrument piping used for the level instrumentation. There are four(4) pressure instruments used for monitoring reactor pressure during transients to assure that the RPV pressure Safety limit is not exceeded. There are eight(8) other pressure instruments used for the reactor high pressure scram and logic for MSIV protective functions. The reactor will scram if the RPV is at a given pressure in the RUN mode with MSIV's closed. Four(4) other pressure switches are part of the Recirculation (RR) System ATWAS protective feature.

a. What is the RPV pressure Safety limit (psig)? (0.5)

b. What is the setpoint of the reactor high pressure scram (psig)? (0.5)

c. What is the RPV pressure at which the reactor will scram with the MSIV's closed, in the RUN mode (psig)? (0.5)

d. What is the setpoint of the RPV high pressure alarm that alerts the operator of abnormal system pressure (psig)?(0.5)

e. What is the RPV pressure (psig) setpoint at which the high pressure RR system ATWAS protective feature will initiate, assuming all other logic criteria are met? (0.5)

*ANSWER
3.05 (2.5)

a. 1325 (+/- 1) psig (0.5)

b. 1037 (+/- 1) psig (0.5)

c. 1037 (+/- 1) psig (0.5)

d. 1027 (+/- 1) psig (0.5)

e. 1135 (+/- 1) psig (0.5)

*REFERENCE
WNP-2 Systems, NBI, pp. 46 - 60,;
WNP-2 Systems Learning Objectives, NBI 14;
K/A 216000K411, Importance Rating ***4.0***;
K/A 216000K502, Importance Rating ***3.1***;
K/A 216000K004, Importance Rating ***3.6***;
K/A 216000K012, Importance Rating ***3.7***;
K/A 216000K412, Importance Rating ***3.7***;

*QUESTION
3.06 (3.0)

The APRM subsystem is composed of APRM channels A through F. Each APRM channel receives signals from in-core neutron detectors (LPRM's) and reactor recirculation (RR) system flow via the Flow Converter Units. There are three(3) conditions that will generate a "Flow Converter INOP" rod block. One(1) of these is, "Module Unplugged".

a. What are the other two(2) conditions that will generate a "Flow Converter Inop" rod block? (0.5 pts. each)(1.0)

b. What is the APRM flow biased scram setpoint in terms of recirculation flow (W) and percent of rated power, with two(2) recirculation pumps running? (0.5)

c. What is the APRM flow biased scram setpoint in terms of recirculation flow (W) and percent of rated power, with one(1) recirculation pump running? (0.5)

d. What is the OPERATIONAL CONDITION in which the APRM flow biased scram function is activated (not bypassed)? (0.25)

e. What is the purpose of the "slope and bias circuit" of each APRM channel? (0.75)

*ANSWER
3.06 (3.0)

a. 1. 10% mismatch between comparators (0.5)
2. 108% (hi) flow any channel (0.5)

b. 0.66(+/- .02)W + 51 (+/- 2)% (0.5)

c. 0.66(+/- .02)W + 47.7 (+/- 2)% (0.5)

d. OPERATIONAL CONDITION - 1 (Mode Switch in RUN) (0.25) ~~(0.5)~~

e. Provides a flow biased reference (for upscale thermal and upscale alarm trips). (0.75)

*REFERENCE
WNP-2 Systems, APRM, pp. 17 - 31,;
WNP-2 Technical Specifications, Table 2.2.1-1;
WNP-2 Systems Learning Objectives, APRM 7,11,14;
K/A 215005K407, Importance Rating ***3.7***;
K/A 215000K004, Importance Rating ***3.8***;
K/A 215000K012, Importance Rating ***3.7***;

*QUESTION
3.07 (2.0)

WNP-2 Technical Specifications identifies two(2) reasons for the APRM flow biased trips. One(1) of these reasons is to ensure that 1% plastic strain does not occur on the fuel cladding in a degraded situation ("design total peaking factor exceeded"). By using recirculation loop flow instead of core flow as an input to the APRM flow converters, the occurrence of "spurious" scrams is reduced.

a. What is the other reason for the APRM flow biased trips? (1.0)

b. Why are "spurious" scrams reduced in frequency when using recirculation loop flow as an input to the APRM flow converters, instead of actual core flow? (1.0)

*ANSWER
3.07 (2.0)

a. So that MCPR does not become less than the (fuel cladding integrity) safety limits (>1.06 for two recirc ops., >1.07 for single recirc ops.). (1.0)

b. Recirculation flow is steadier (less control noise). (1.0)

*REFERENCE
WNP-2 Systems, APRM, pp. 30 - 33;
WNP-2 Technical Specifications, Bases pp. B 2-7;
WNP-2 Systems Learning Objectives, APRM 11,12;
K/A 215005K407, Importance Rating ***3.7***;
K/A 215000K004, Importance Rating ***3.8***;
K/A 215000K012, Importance Rating ***3.7***;

*QUESTION
3.08 (1.5)

Attached Figure 3.08 shows an LPRM/APRM meter associated with APRM channel B. The meter usually indicates an APRM channel output, but can be selected to read the output from any LPRM that is assigned to a particular APRM channel. Notice that the function switch is selected to the "count position" and that the meter reads "75". Using Figure 3.08:

a. How many operating LPRMs are assigned to this APRM channel? (0.5)

b. How many LPRM's must be operable to avoid having their assigned APRM channel go INOP? (0.25)

c. What is the purpose of the function switch selections labeled A,B,C, and D? (0.75)

*ANSWER
3.08 (1.5)

a. 15 LPRM's (75% / 5% per LPRM count circuit) (0.5)

b. 14 LPRM's (0.25)

c. To select a particular LPRM"s axial core height position (for individual LPRM power level indication). (0.75)

*REFERENCE
WNP-2 Systems, APRM, pp. 12-13;
WNP-2 Systems, LPRM, pp. 14-16;
WNP-2 Systems Learning Objectives, LPRM 7,9,10;
K/A 215005K501, Importance Rating ***2.8***;
K/A 215000K004, Importance Rating ***3.8***;
K/A 215000K012, Importance Rating ***3.7***;
K/A 215000K009, Importance Rating ***3.6***;

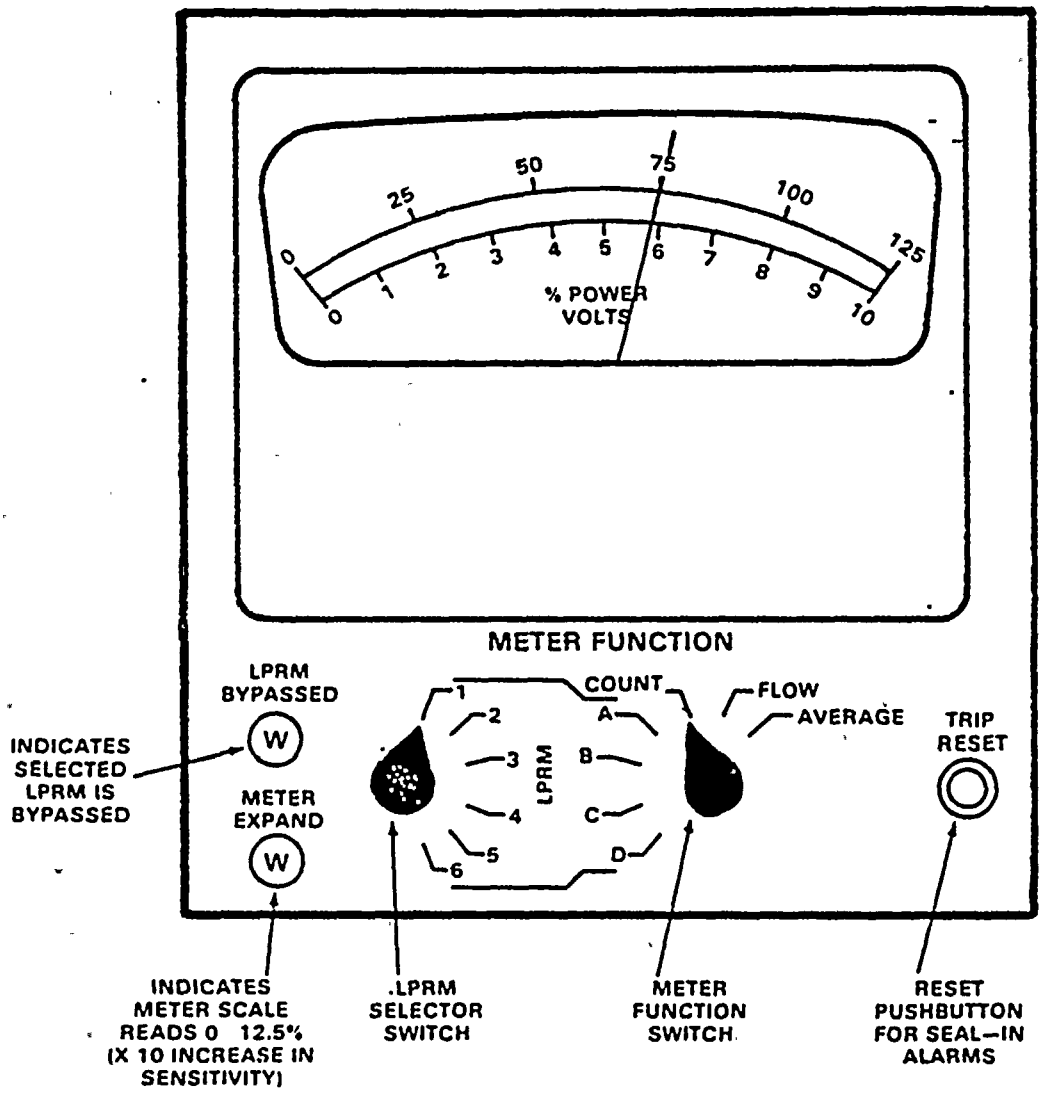

831503.26LT
SEPT 1986
APRM

FIGURE 3.08 LPRM/APRM METER

*QUESTION
3.09 (3.0)

You are the Reactor Operator at the control board for shutdown margin testing during a refueling/maintenance outage. The reactor is in OPERATIONAL CONDITION 5 with the Reactor Protection System (RPS) logic in "NON-COINCIDENT" line-up. When in this condition, there are six(6) specific neutron monitoring RPS trips that will cause a FULL scram upon ANY associated RPS channel trip(A or B). One(1) of these is, "APRM high high neutron (118% or 15%)". Therefore, these six(6) scrams are "NON-COINCIDENT".

a. What are the other five(5) "NON-COINCIDENT" scrams? (setpoints not necessary) (0.5 pts. each) (2.5)

b. What component is used to bypass the "non-coincident" RPS trips for reactor start up and power operations? (0.5) (a logic diagram is not required)

*ANSWER
3.09 (3.0)

a.
1. SRM hi-hi (2 x 10^5 cps) (0.5)
2. IRM hi-hi (120/125 of scale) (0.5)
3. IRM inop (0.5)
4. APRM high high thermal (flow biased) (0.5)
5. APRM inop (0.5)

b. Shorting links (installed around the auxiliary trip relay contacts in the manual scram circuits) (0.5)

*REFERENCE
WNP-2 Systems, RPS, pp. 13-14;
WNP-2 Systems Learning Objectives, RPS 12;
K/A 212000K411, Importance Rating ***3.3***;
K/A 212000K004, Importance Rating ***4.2***;

*QUESTION
3.10 (2.0)

The Reactor Protection System (RPS) buses A and B supply power to their respective RPS trip channels A and B. To restore the RPS to normal operation following a scram, the trip actuators must be reset manually. After a 10 second delay, with the MODE switch in the SHUTDOWN position, reset is possible only if the conditions that caused the scram have been cleared.

a. What is the 4160 VAC power supply (by bus identifier) to RPS MG set "A". (0.5)

b. What is the 4160 VAC power supply (by bus identifier) to RPS MG set "B". (0.5)

c. What is the reason for this 10 second time delay? (1.0)

*ANSWER
3.10 (2.0)

a. SM-7 (0.5)

b. SM-8 (0.5)

c. To ensure that all rods have completed their scram stroke (before any scram can be reset) (1.0)

*REFERENCE
WNP-2 Systems, RPS, pp. 1-27;
WNP-2 Systems Learning Objectives, RPS 5,11;
K/A 212000K408, Importance Rating ***4.2***;
K/A 212000K004, Importance Rating ***4.2***;

*QUESTION
3.11 (2.0)

On control room panel P603, there are three(3) manual override lights for three(3) corresponding High Pressure Core Spray (HPCS) system components. One(1) of these components is the HPCS pump (HPCS-P-1). There are two(2) specific conditions that must exist for these lights to be illuminated. One(1) of these conditions is that the HPCS initiation logic must be sealed in.

a. What are the other two(2) HPCS components that have a manual override lights on P603? (0.5 pts. each)(1.0)

b. What is the other specific condition that must exist for these lights to be illuminated? (1.0)

*ANSWER
3.11 (2.0)

a. 1. HPCS injection valve (HPCS-V-4) (0.5)
   2. HPCS suppression pool suction valve (HPCS-V-15) (0.5)

b. The associated components (as named above) are not in there required position (they have been manually overridden via their respective control switches). (1.0)

*REFERENCE
WNP-2 Systems, HPCS, pp. 10;
WNP-2 Systems Learning Objectives, HPCS 11;
K/A 206000K004, Importance Rating ***4.1***;
K/A 206000K007, Importance Rating ***4.1***;

****
END OF SECTION 3

SECTION 4

Procedures - Normal, Abnormal, Emergency, and Radiological Control

*QUESTION
4.01 (3.25)

You are operating the fuel grapple over the spent fuel pool during core unloading operations. Your shift foreman is with you on the refueling platform, verifying the placement of spent fuel bundles in the fuel storage racks. Both of you have just started the shift (time into shift is 0 seconds). Your shift foreman is 48 years old and has a total lifetime occupational dose of 100 Rem. You are 30 years old and have not received any occupational exposure to radiation over the present calendar quarter. Due to a management error, both of you took the shift without a shift turn over, and are the only persons on the refuel floor. The refueling floor radiation monitoring equipment (including refuel floor HVAC) is out of service. The background radiation level is a steady 5 Rem/hr. The 10CFR20 whole body quarterly exposure limit is 1.25 Rem.

a. How long can you remain (in hours) on the refueling platform without exceeding your 10CFR20 whole body quarterly exposure limit? (Show all work!) (0.5 for application) (0.25 for value) (0.75)

b. What is the 10CFR20 quarterly exposure limit (Rem) for the skin of your whole body? (0.5)

c. What is the 10CFR20 quarterly exposure limit (Rem) for your hands and forearms? (0.5)

d. How much radiation (Rem) can your Shift Foreman receive before exceeding his 10CFR20 lifetime limit for occupational exposure? (Show all work!) (0.75 for application) (0.25 for value) (1.0)

e. What is the name of the program outlined in 10CFR20, if carried out at WNP-2, would not have allowed you to work in the conditions described above? (0.5)

(see next page for answer key)

*ANSWER
4.01 (3.25)

a. Application:

time = 1.25 Rem/5 Rem per hr. (0.5)

Value:
time = 0.25 (+/- .02) hours (15 min.) (0.25)

b. 7.5 Rem (0.5)

c. 18.75 Rem (0.5)

d. Application:

exposure limit= 5 x (N - 18) Rem (0.25)
= 5 x (48 - 18) Rem (0.25)
exposure left = 150 - 100 Rem (0.25)

Value:
exposure left = 50 (+/- 2) Rem (0.25)

e. ALARA (As Low As Reasonably Achievable) (0.5)

*REFERENCE
10 CFR 20;
WNP-2 PPM 1.11.2, pp. 1-2;
WNP-2 PPM 1.11.3, pp. 5;
WNP-2 Learning Objectives, PPM 1.11.2 - 1,2;
WNP-2 Learning Objectives, PPM 1.11.3 - 7;
K/A 294001K103, Importance Factor ***3.3***;
K/A 294001K104, Importance Factor ***3.3***;

*QUESTION
4.02 (0.75)

MULTIPLE CHOICE (Select the correct response)

WNP-2 procedure PPM 1.9.2 (confined space entry) provides the safety requirements for entry into an oxygen deficient atmosphere. As specified in PPM 1.9.2:

Which of the following correctly identify the upper limit for an "oxygen deficient atmosphere"?

a. Less than 8.5 percent oxygen.

b. Less than 29.5 percent oxygen.

c. Less than 19.5 percent oxygen.

d. Less than 0.5 percent oxygen.

*ANSWER
4.02 (0.75)

c.

*REFERENCE
WNP-2 PPM 1.9.2, pp. 1;
WNP-2 Learning Objectives, PPM 1.9.2 - 1;
K/A 294001K113, Importance Factor ***3.2***;

*QUESTION
4.03 (1.5)

WNP-2 procedure PPM 1.9.3 (Personnel Entry to Primary Containment) cautions that the control room operator shall not alter plant conditions except to shutdown, while personnel are in the drywell. In accordance with PPM 1.9.3 and PPM 3.I.2 (Reactor plant Cold Startup):

a. What is the minimum number of people required for the initial entry team for a primary containment entry? (0.5)

b. What is the steam pressure (psig) at which Drywell inspections will normally be completed? (0.5)

c. Whose approval must the Shift Manager obtain for an initial containment entry with the reactor shutdown? (0.5)

*ANSWER
4.03 (1.5)

a. 4 (0.5)

b. 400 (+/- 5) psig (0.5)

c. Health Physics(/Chemistry) manager (0.5)

*REFERENCE
WNP-2 PPM 1.9.3, pp. 2-9;
WNP-2 PPM 3.1.2, pp. 2;
WNP-2 Learning Objectives, PPM 1.9.3 - 1 to 4;
K/A 294001K113, Importance Factor ***3.2***;

*QUESTION
4.04 (1.0)

WNP-2 General Operating Procedure PPM 3.1.2 (Reactor Plant Cold Startup) precautions to verify that the Main Steam Line (MSL) trap bypass valves (steam traps) function properly during system operation.

What is the reason for this precaution?

*ANSWER
4.04 (1.0)

To prevent condenser tube failures.

(The main condenser baffles at the drain line penetrations are not designed for steam flow. If the baffles failed the condenser tubes will eventually fail).

*REFERENCE
WNP-2 PPM 3.1.2, pp. 2;
WNP-2 Learning Objectives, PPM 2and3;
K/A 245000K203, Importance Factor ***3.5***;
K/A 245000K007, Importance Factor ***3.5***;

*QUESTION
4.05 (2.0)

During reactor startup PPM 3.1.1 (Plant Startup) precautions that the RPV shall be vented with the reactor coolant less than a certain operating temperature, and that the MSIV's cannot be opened until the steam lines are well drained with their maximum differential pressure is within a certain limit. PPM 3.2.1 (Normal Shutdown to Cold Shutdown) precautions that closure of the MSIV's should be performed in a certain MSIV test MODE.

a. What is the reactor coolant temperature (deg. F) below which the RPV must be vented? (0.5)

b. What is this differential pressure limit (psid) for opening the MSIV,s? (0.5)

c. Where does the control room operator reset the MSIV isolation signals (by panel designator, Pxxx)? (0.5)

d. What is the preferred closure method of the MSIV's? (0.5)

*ANSWER
4.05 (2.0)

a. 190 (+/- 1)degrees F (0.5)

b. 50 (+/- 1) psid (0.5)

c. P601 (0.5)

d. Slow Test MODE (0.5)

*REFERENCE
WNP-2 PPM 3.1.1, pp. 2;
WNP-2 PPM 2.2.6, pp. 3;
WNP-2 Learning Objectives, PPM 2and3;
K/A 239001K203, Importance Factor ***4.0***;
K/A 239001K004, Importance Factor ***3.6***;

*QUESTION
4.06 (2.0)

In accordance with PPM 3.1.2 (Plant Startup) more than two(2) circulating water pumps should not be started while buses SM1, SM2, and SM3 are being powered by startup transformer TR-S. The "long cycle" condensate flow through the long cycle cleanup valve (RFW-FCV-15) is also limited to 3500 gpm when a Reactor Feedwater Pump (RFP) is running.

a. What is the reason for limiting two(2) circulating water pumps to TR-S? (1.0)

b. What is the reason for limiting long cycle condensate flow to 3500 gpm? (1.0)

*ANSWER
4.06 (2.0)

a. The subsequent starting of a third circ. pump would trip TR-S (on undervoltage- would trip all circ water). (1.0)

b. To prevent piping (and hanger) damage to the long cycle recirc. line. (1.0)

*REFERENCE
WNP-2 PPM 3.1.2, pp. 2;
WNP-2 PPM 2.2.4, pp. 3;
WNP-2 Learning Objectives, PPM 2and3;
K/A 259001K004, Importance Factor ***3.4***;
K/A 259001K008, Importance Factor ***3.5***;

*QUESTION
4.07 (2.5)

Emergency situations are classified using the guidance provided in EPIP 13.1.1 (Classifying the Emergency). However, final responsibility for emergency classification rests with a certain individual (job description) based on the initial plant condition information provided by the Shift Manager (or CRS). At WNP-2, emergencies are classified by four(4) "Emergency Action Levels" (EAL's).

a. What are the four(4) EAL's? (0.5 pts. each)(2.0)

b. What is the job description of the individual that has the final responsibility for emergency classification? (0.5)

*ANSWER
4.07 (2.5)

a. (any order)

1. Unusual Event (0.5)
2. Alert (0.5)
3. Site Area (Emergency) (0.5)
4. General (Emergency) (0.5)

b. Plant (Emergency) Director (PED) (0.5)

*REFERENCE
WNP-2 EPIP 13.1.1, pp. 1-11;
WNP-2 Learning Objectives, EPIP's - 1,6;
K/A 294001A116, Importance Factor ***2.9***;

*QUESTION
4.08 (3.0)

According to WNP-2 Technical Specification bases 3/4.4.1 (Recirculation System), an inoperable Jet Pump is not, in itself, a sufficient reason to declare a recirculation loop inoperable. However, an inoperable Jet Pump does worsen the consequences of a designed based accident. WNP-2 PPM 2.2.1 (Reactor Recirculation System) identifies two loop flow mismatch limits, one(1) for flow less than 70% rated core flow, and one(1) for greater than 70% rated core flow.

a. What is rated core flow (Mlb/hr)? (0.5)

b. What is the two loop flow mismatch limit (% flow) for flow less than 70% rated core flow? (0.5)

c. What is the two loop flow mismatch limit (% flow) for flow greater than 70% rated core flow? (0.5)

d. What particular Jet Pump component is particularly susceptible to flow vibration damage? (0.5)

e. Why does the loss of a Jet Pump worsen the consequences of a designed based accident? (1.0)

*ANSWER
4.08 (3.0)

a. 108.5 (+/- 1.5) Mlb/hr. (0.5)

b. 10 (+/- 1)% (0.5)

c. 5 (+/- 1)% (0.5)

d. ~~e.~~ Jet Pump riser braces. (0.5)

e. ~~d.~~ A Jet Pump failure will increase the accident blow down area (reducing the reflooding capability of the ECCS) (1.0)

*REFERENCE
WNP-2 PPM 2.2.1, pp. 3;
WNP-2 Technical Specification bases 3/4.4.1
WNP-2 Learning Objectives, PPM 2&3 - 1 to 3;
WNP-2 Learning Objectives, Technical Specifications - 2,3;
K/A 202001K010, Importance Factor ***3.5***;

*QUESTION
4.09 (3.0)

WNP-2 PPM 2.2.1 (Reactor Recirculation System) precautions to secure Reactor Recirculation (RR) Pump seal purge prior to isolating a Recirculation loop. There are also RR pump seal cooling limitations that effect this system. However, if seal injection is lost, RR pump operation may continue as long as a certain "back up" cooling method is still operable.

a. What specific RR pump seal auxiliary component provides this "back up" cooling method? (0.5)

b. What plant auxiliary system provides the cooling water (heat sink) directly to this "back up" cooling source? (0.5)

c. How long (minutes) does the operator have to shut down a RR pump if all cooling methods are lost and the pumped fluid exceeds the operating temperature limit? (0.5)

d. What is this RR pump process flow temperature limit (degrees F), above which the pump must be shut down if all cooling is lost? (0.5)

e. What is the reason for the precaution to secure Reactor Recirculation (RR) Pump seal purge prior to isolating a loop? (1.0)

*ANSWER
4.09 (3.0)

a. RR pump seal heat exchanger. (0.5)

b. RCC. (0.5)

c. one(1) minute (0.5)

d. 200 degrees F (± 50 °F) (0.5)

e. over pressurization of the isolated RR loop (because of the high CRD pump pressure head). (1.0)

*REFERENCE
WNP-2 PPM 2.2.1, pp. 3-5;
WNP-2 Learning Objectives, PPM 2&3 - 1 to 3;
K/A 202001A007, Importance Factor ***3.8***;
K/A 202001A010, Importance Factor ***3.5***;

*QUESTION
4.10 (4.0)

At WNP-2 it is possible to over pressurize the Reactor Building through misalignment of Refueling Floor HVAC. Emergency Procedure PPM 5.2.5 (Secondary Containment Control) specifies five(5) entry conditions. There are two(2) immediate operator actions associated with this Emergency Procedure.

a. What are the five(5) entry conditions for PPM 5.2.5? (0.5 pts each) (2.5)

b. What is the specific Secondary Containment condition that would require an operator to implement these immediate actions? (0.5)

c. What are the two(2) immediate operator actions specified in PPM 5.2.5? (0.5 pts each) (1.0)

*ANSWER
4.10 (4.0)

a. (any order, 0.5 pts each) (2.5)

1. Secondary containment differential pressure (at) or above 0 (+/-.001) inches of water.
2. Area temperature above the alarm setpoint.
3. HVAC exhaust radiation level above the alarm setpoint.
4. Area radiation level above the alarm setpoint.
5. Area water level above the alarm level.

b. Reactor Building HVAC exhaust (plenum) radiation level exceeds 13 mr/hr. (0.5)

c. (any order, 0.5 pts each) (1.0)

1. Confirm (or manually) initiate isolation of Reactor Building HVAC.
2. Confirm initiation (or manually) initiate SBGT.

*REFERENCE
WNP-2 PPM 5.2.5, pp. 1-3;
WNP-2 Learning Objectives, EOP's - 2, 7;
K/A 295034A011, Importance Factor ***4.2***;

*QUESTION
4.11 (2.0)

The reactor operating with the RHR system operating in S/D Cooling Mode. Suddenly the shutdown cooling suction and return valves (RHR-V-8,9,23,53A,53B,99A, and 99B) go shut. WNP-2 Abnormal Condition Procedure PPM 4.4.2.1 (Loss of Shutdown Cooling Mode Loops) specifies five(5) plant conditions that would cause this "Automatic Action" and subsequent loss of shutdown cooling. One(1) of these is a low reactor vessel level - less than level 3. The immediate operator actions require the operator to notify the CRS and verify all of the automatic actions have occurred. There is one(1) other "Automatic Action" that is caused by this valve closure, that must be verified by the operator.

a. What are the other four(4) plant conditions that could initiate a closure of the shutdown cooling suction and return valves ("Automatic Action") in this mode? (setpoints not necessary) (0.25 pts. each) (1.0)

b. What is the other "Automatic Action" that must be immediately verified by the operator? (0.5)

c. What is the setpoint (inches) of the RPV low level 3 trip? (0.5)

*ANSWER
4.11 (2.0)

a. (~~0.5~~ 0.25 pts. each) ~~(2.0)~~ 1.0

1. High RHR room area dT.
2. High reactor steam dome pressure.
3. High RHR system flow rate.
4. High RHR room temperature.

b. RHR pump trips (0.5)

c. 13 inches (0.5)

*REFERENCE
WNP-2 PPM 4.4.2.1, pp. 1-2;
WNP-2 Technical Specifications, Table 3.3.2-2;
WNP-2 Learning Objectives, AP's;
K/A 295021A011, Importance Factor ***3.6***;

****
END OF SECTION 4
END OF EXAM