REGULATORY INFORMATION DISTRIBUTION SYSTEM (RIDS)

ACCESSION NBR:8307110007 DOC.DATE: 83/06/30 NOTARIZED: NO DOCKET #
FACIL:50-397 WPPSS Nuclear Project, Unit 2, Washington Public Powe 05000397
AUTH.NAME AUTHOR AFFILIATION
BOUCHEY,G.D. Washington Public Power Supply System
RECIP.NAME RECIPIENT AFFILIATION
SCHWENCER,A. Licensing Branch 2

SUBJECT: Responds to NRC request for addl info re SER Confirmatory Issue 7 "Component Supports." Results of evaluation in Phase II indicate that 175 supports & 16 anchors acceptable.

DISTRIBUTION CODE: B001S COPIES RECEIVED:LTR 31 ENCL 16 SIZE: 11
TITLE: Licensing Submittal: PSAR/FSAR Amdts & Related Correspondence

NOTES:

	RECIPIENT ID CODE/NAME		COPIES LTTR	COPIES ENCL	RECIPIENT ID CODE/NAME		COPIES LTTR	COPIES ENCL
	NRR/DL/ADL		1	0	NRR LB2 BC		1	0
	NRR LB2 LA		1	0	AULUCK,R.	01	1	1
INTERNAL:	ELD/HDS2		1	0	IE FILE		1	1
	IE/DEPER/EPB	36	3	3	IE/DEPER/IRB	35	1	1
	IE/DEQA/QAB	21	1	1	NRR/DE/AEAB		1	0
	NRR/DE/CEB	11	1	1	NRR/DE/EHEB		1	1
	NRR/DE/EQB	13	2	2	NRR/DE/GB	28	2	2
	NRR/DE/MEB	18	1	1	NRR/DE/MTEB	17	1	1
	NRR/DE/SAB	24	1	1	NRR/DE/SGEB	25	1	1
	NRR/DHFS/HFEB	40	1	1	NRR/DHFS/LQB	32	1	1
	NRR/DHFS/PSRB		1	1	NRR/DL/SSPB		1	0
	NRR/DSI/AEB	26	1	1	NRR/DSI/ASB		1	1
	NRR/DSI/CPB	10	1	1	NRR/DSI/CSB	09	1	1
	NRR/DSI/ICSB	16	1	1	NRR/DSI/METB	12	1	1
	NRR/DSI/PSB	19	1	1	NRR/DSI/RAB	22	1	1
	NRR/DSI/RSB	23	1	1	REG FILE	04	1	1
	RGN5		3	3	RM/DDAMI/MIB		1	0
EXTERNAL:	ACRS	41	6	6	BNL(AMDTS ONLY)		1	1
	DMB/DSS (AMDTS)		1	1	FEMA-REP DIV	39	1	1
	LPDR	03	1	1	NRC PDR	02	1	1
	NSIC	05	1	1	NTIS		1	1

TOTAL NUMBER OF COPIES REQUIRED: LTTR 53 ENCL 46

Washington Public Power Supply System
P.O. Box 968 3000 George Washington Way Richland, Washington 99352 (509) 372-5000

June 30, 1983
G02-83-584

Docket No. 50-397

Mr. A. Schwencer, Chief
Licensing Branch No. 2
Division of Licensing
U.S. Regulatory Commission
Washington, D.C. 20555

Dear Mr. Schwencer:

Subject: NUCLEAR PROJECT NO. 2
SAFETY EVALUATION REPORT (NUREG-0892)
CONFIRMATORY ISSUE NO. 7 - COMPONENT SUPPORTS

Reference: G02-82-1021, dated December 30, 1982; DG Bouchey (Supply System) to A. Schwencer (NRC)

On December 30, 1982, the Supply System submitted information regarding the subject item, Confirmatory Issue No. 7 - Component Supports. In March of 1983, the NRC Staff requested additional information as contained in question 110.40. That question was as follows:

110.40 SER Confirmatory Issue No. 7 - Component Supports

The information contained in the letter from G. D. Bouchey to A. Schwencer, "Nuclear Project No. 2 SER Confirmatory Issue No. 7 - Component Supports", dated December 30, 1982 is not completely acceptable. The response addressed piping supports only. The staff's concerns on this issue pertains to all component supports. In addition, the information in Section III.E of the attachment to the letter, "C-2808 Burns and Roe Large Bore Piping" does not provide an adequate basis for the staff to conclude that all of these supports are conservatively designed. Provide the following additional information:

1. In addition to the information submitted in the above referenced letter, provide a response to the staff's position for all remaining component supports, such as those for pumps, heat exchangers, filters, etc.

B001
1/1

8307110007 830630
PDR ADOCK 05000397
E PDR

2. Relative to the C-2808 contract:

   a. Of the 1500 rigid piping supports which are affected by the addition of thermal loads to the faulted condition loads, identify those that exceed the specified allowable stress limits and by what amount.

   b. For all supports identified in 2a above, justify the acceptability at the predicted stress. Such a justification could demonstrate that support failure does not occur even if the design limit is exceeded or could utilize inherent design conservatisms. If this justification includes the consideration of inherent design conservatisms, provide a quantitiative discussion of how such conservatisms were applied to the analysis.

As discussed in previous telecons, the following responses are provided to question 110.40:

1. Component supports for equipment such as pumps, heat exchangers and filters generally are designed by equipment suppliers. The interfaces with piping system designs are controlled by way of allowable equipment nozzle loads which are either provided by the equipment supplier or determined by Code rules. By providing piping system designs which comply with these interface requirements, it is consequently established that component support design limits are not exceeded.

   Equipment nozzle loads for safety related piping systems are examined as part of the piping system design process to determine that nozzle loads are within allowables. For the piping systems examined in Phase II of the evaluation (see response to question 2 below) nozzle loads also have been examined with seismic anchor point motion and thermal expansion of piping included. The nozzle loads were determined to be within vendor allowables.

2a. The Supply System is unaware of any support or support member which cannot be demonstrated within allowable stress limits with the inclusion of thermal loads as primary in the faulted load combination. The C-2808 faulted load combinations do not include thermal loads as primary since that was not required by the applicable 1971 Winter 1973 Addenda ASME Section III Boiler and Pressure Vessel Code. The current stress margin for any support or support member is not known. The addition of normal thermal loads may decrease the existing primary stress margin. However, to quantify that margin would require reanalysis of every affected support in WNP-2. In order to demonstrate that

sufficient stress margin exists to envelope the addition of normal thermal loads, a two phase study was conducted. A summary of that study was reported in the referenced letter; response (2b) below further details the results of that study.

2b. As stated in (2a) above, the actual support stress margin cannot be reported without extensive reanalysis.

However, to demonstrate the adequacy of all affected supports, the 10,700 large bore supports in Contract C-2808 were evaluated for applicability. In this study, all loadings on component supports due to the thermal expansion of the piping was classified as a primary stress whereas in many cases this load induces a secondary stress. The attached flow charts define the evaluation process; Steps (1) through (20) describe Phase I of this evaluation of which step (5) shows 1052 supports (approximately 1500 support directions) affected by normal thermal loads.

By simple observation, 48% of all affected support directions were found adequate and that existing stress margins were sufficient to offset the addition of normal thermal loads as primary in the faulted combination. The remaining supports contain conservatisms of up to 50% in the existing design and even greater margins if conservatisms in the load definition were refined. Steps (14) and (15) illustrate one existing design conservatism of including thermal in the emergency load combination. The faulted load combination including thermal as a primary load was found to be less than the existing emergency combination on a small number of supports. Steps (16) and (17) illustrate the increased stress allowable on AISC and ASME support members when increasing from emergency to faulted conditions. The minimum primary stress allowable increase is 20.8% which applies to both AISC and ASME III component steel (A500 Gr B) not welded to pressure boundaries. All other primary allowable increases are greater than 20.8%. Steps (18) and (19) indicate those supports for which other conservatisms would need to be quantified to show support adequacy.

Rather than conducting a detailed evaluation of each of these remaining supports, a second phase of the evaluation was undertaken to demonstrate by a sampling technique that WNP-2 supports were designed sufficiently conservative to envelope the addition of normal thermal loads as primary.

Steps (21) through (39) fully detail this second phase and indicate the distribution of supports among the various acceptance criteria.

Step (23) of Phase II indicates the reduction of conservatisms from the original load definition; the major area of conservatism which was refined in this step was the seismic criteria. An analytical plant model being used in other areas of the plant was applied to these anchor group calculations with a resultant 20% average reduction in load; Steps (29) through (34) were identical to steps (12) through (17) of Phase I. Step (35) evaluated and accepted all 16 anchors although only 20 of 96 load directions had actual increases above the existing faulted load. In step (37) only 25 of the 175 support directions required individual evaluation and all were found acceptable (the predicted stress is less than the allowable stress). No further refinement of the load definition was pursued following acceptance of the entire sample and neither the available stress margin nor the additional load carrying capability is known.

As presented in the referenced letter, this sample was chosen in order to present the worst case conditions, the greatest percentage load increases, and assures the Supply System with an extremely high degree of confidence, that no support in the plant will exceed allowable stress levels if normal thermal stresses are included as primary loads in the faulted combination.

In order for the NRC staff to more fully understand the process described above and to evaluate the Supply System conclusions, a brief description of the entire Confirmatory Issue No. 7 evaluation for the C-2808 Burns and Roe Large Bore Piping follows:

Each paragraph describes numbered steps identified on the attached flow charts. These steps define the process used in evaluating WNP-2 large bore piping supports as described in paragraph III.E.2 of letter GO2-82-1021 dated December 30, 1982, G. D. Bouchey, Supply System, to A. Schwencer, NRC.

1) The total number of large bore piping supports (2 1/2" nominal pipe size, and greater) at WNP-2 is approximately 10,700. Certain supports provide multiple direction support and may consist of various types of support.

2) For design purposes, WNP-2 supports are divided into one of four groups; Groups 3 and 4 total 7,564 of the 10,700 supports. These non-critical supports are hot non-ASME outside of and not attached to containment, or cold non-ASME outside of and not attached to containment.

3) Supports which are cold ASME outside of and not attached to containment can be eliminated from the scope; since the thermal loads on these supports are generally insignificant; these 893 of the remaining 3,136 supports are designated as Group 2.

4) Only thermally rigid supports in the remaining 2,243 need be evaluated; 1,191 supports are not thermally rigid and are not included in Phase I.

5) Only as-built piping and hanger details were used in the initial evaluation. At the time the evaluation was conducted, 794 applicable as-built support details were available; 258 as-builts were not then available and not included in Phase I.

6) The total number of supports not included in the Phase I evaluation, for the reasons discussed above, are approximate and were obtained from various site tabulations:

7,564	supports non critical (B31.1 outside containment)
893	ASME supports not hot or not in containment
1,191	supports not thermally rigid
258	as-builts not available
9,906	Total

7) Anchors, and their multiple combined loadings, were handled slightly different than other supports; 70 anchors were included in the remaining 794 supports.

8) Each of the 70 anchors represent 3 orthogonal moments and 3 orthogonal forces; the 70 anchors in Phase I represent 420 restaint directions.

9) The 724 supports, in some cases, consist of multiple restraints in different directions. For ease of construction, such restraints are often combined into a single structure although each direction has its own design load. During design and design verification, the supports are evaluated first independently and then combined. In a few cases, the analytical data point has no actual load and no hanger exists; 931 actual support directions are contained in the 724 supports.

10) Tabulations of the 70 anchors (420 support directions) were prepared defining the various load combinations including normal thermal as primary in the faulted combination. This tabulation is given in terms of load (pounds) or moments (foot-pounds).

11) Tabulations of the 931 support directions were prepared defining the various load combinations including normal thermal as primary in the faulted combination. This tabulation is given in terms of load (pounds).

12) A comparison of the faulted load combinations with and without inclusion of thermal load as primary was made with the existing anchor faulted load; 56 of the 420 anchor directions were found less or equal to the original faulted load. Inclusion of the thermal load decreased the static load in many cases.

13) A comparison of the faulted load combinations, with and without inclusion of thermal load as primary, was made; 172 of 931 support directions were found less or equal to the original faulted load.

14) A comparison of the faulted combination including thermal as primary was made against the existing emergency combination; 2 of 364 anchor directions were found less or equal to the original emergency load.

15) A comparison of the faulted combination including thermal as primary was made against the existing emergency combination; 27 of 759 support directions were found less or equal to the original emergency load.

16) The minimum primary stress allowable increase from emergency to faulted is 20.8%. Dependent upon the particular support member, this increased allowable is as high as 50%. The anchor faulted loads including thermal load as primary were compared to 1.2 times the existing emergency load combination which included thermal as primary. 151 of 362 anchor directions were found less or equal to 1.2 times the original emergency load combination which included thermal as primary.

17) The minimum primary stress allowable increase from emergency to faulted is 20.8%. Dependent upon the particular support member this increased allowable is as high as 50%. The faulted load combination including thermal was compared against 1.2 times the emergency load; 244 of 732 support directions were found less or equal to 1.2 times the existing original emergency load combination which included thermal as primary.

18) The remaining anchor support directions (211 of 420) would require additional review to determine the impact, if any, of including the thermal load in the faulted combination.

19) The remaining support directions (488 of 931) would require additional review to determine the impact, if any, of including the thermal load in the faulted combination.

20) By observation without any detailed analysis, and without removing known design conservatisms, 652 of 1,251 support directions were found acceptable after inclusion of thermal loads as primary in the faulted load combination wherein the predicted primary stress is less than the allowable primary stress.

21) A sample of 5 anchor group calculations was selected from hot piping systems in the Reactor Building which had generally shown large percentage load increases. All systems selected are required to operate following a faulted condition. The sample consisted of 122 supports representing 175 rigid directional supports, 16 anchors and 3 component nozzles.

22) The load definition for all five anchor group calculations was refined to reduce some of the known conservatisms in the analysis. Overall load reductions were about 20%. This preliminary step was completed in order to minimize individual support evaluations later in Phase II program, see (35) and (37).

23) Tabulations of the 122 supports were prepared defining the various primary load combinations, comparing original and new faulted loads, and the percentage change. The tabulation is given in terms of load (pounds) or moments (foot-pounds).

24) Anchors and their moment loading were handled slightly different than rigids; 16 anchors were included in the 122 supports.

25) Each of the 16 anchors represent 3 orthogonal moments and 3 orthogonal forces. The 16 anchors in the Phase II sample represent 96 load directions.

26) The 106 supports, in some cases, consist of multiple restraints in different directions. For ease of construction, such restraints are often combined into a single structure although each direction has its own design load; 175 support directions are contained in the 106 supports.

27) A comparison of Phase I results with the refined analysis of Phase II indicated that 36 of 96 anchor support directions were previously acceptable per (20) above.

28) A comparison of Phase I results with the refined analysis of Phase II indicated that 55 of 169 support directions were previously accepted per (20) above; 6 additional support directions had not actual load as discussed in (9) above for a total of 61.

29) A comparison of the refined primary faulted load combination including normal thermal loads was made with existing anchor faulted load; 36 of 60 anchor directions were less or equal to the original faulted load.

30) A comparison of the refined faulted primary load combination including normal thermal loads was made with the existing faulted load; 73 of 114 support directions were less or equal to the original faulted load.

31) A comparison of the refined primary faulted combination including normal thermal loads, was made with the existing emergency load; none of the remaining 24 anchor directions were accepted during this step.

32) A comparison of the refined primary faulted combination including thermal loads, was made with the existing emergency load; 3 of the remaining 41 support directions were less or equal to the original emergency load combination hich included thermal as primary.

33) The minimum primary stress allowable increase from emergency to faulted is 20.8%. Dependent upon the particular support member, this increased allowable is as high as 50%. The refined faulted load combination including thermal was compared to 1.2 times the existing emergency load; combination which included thermal as primary; 4 of the remaining 24 anchor directions were less or equal to 1.2 times the original emergency load combination.

34) Similar to that discussed in (33) above, support direction refined primary faulted loads including normal thermal loads were compared to 1.2 times the emergency load combination which included thermal as primary; 13 of 38 remaining directions were less or equal to 1.2 times the original emergency load combinations.

35) Twenty anchor support directions required additional review to confirm design adequacy. In actual practice, any anchor with any one of the six refined forces or moments greater than the original faulted load was reanalyzed. Additionally, normal thermal loads were included in the existing opposite side primary faulted load combination for this comparison.

36) No anchors failed.

37) Twenty-five support directions required additional review to confirm desgn adequacy.

38) No supports failed.

39) In conclusion, 175 supports and 16 anchors were evaluated in Phase II and all were found acceptable. The predicted primary stress combination with all support loads resulting from normal piping thermal expansion classified as primary were less than the allowable stress.

Very truly yours,

GD Bouchey

G.D. Bouchey
Manager, Nuclear Safety And Regulatory Programs

Attachments

cc: R. Auluck - NRC
W.S. Chin - BPA
N. Ketzlatch - NRC
A. Toth - NRC

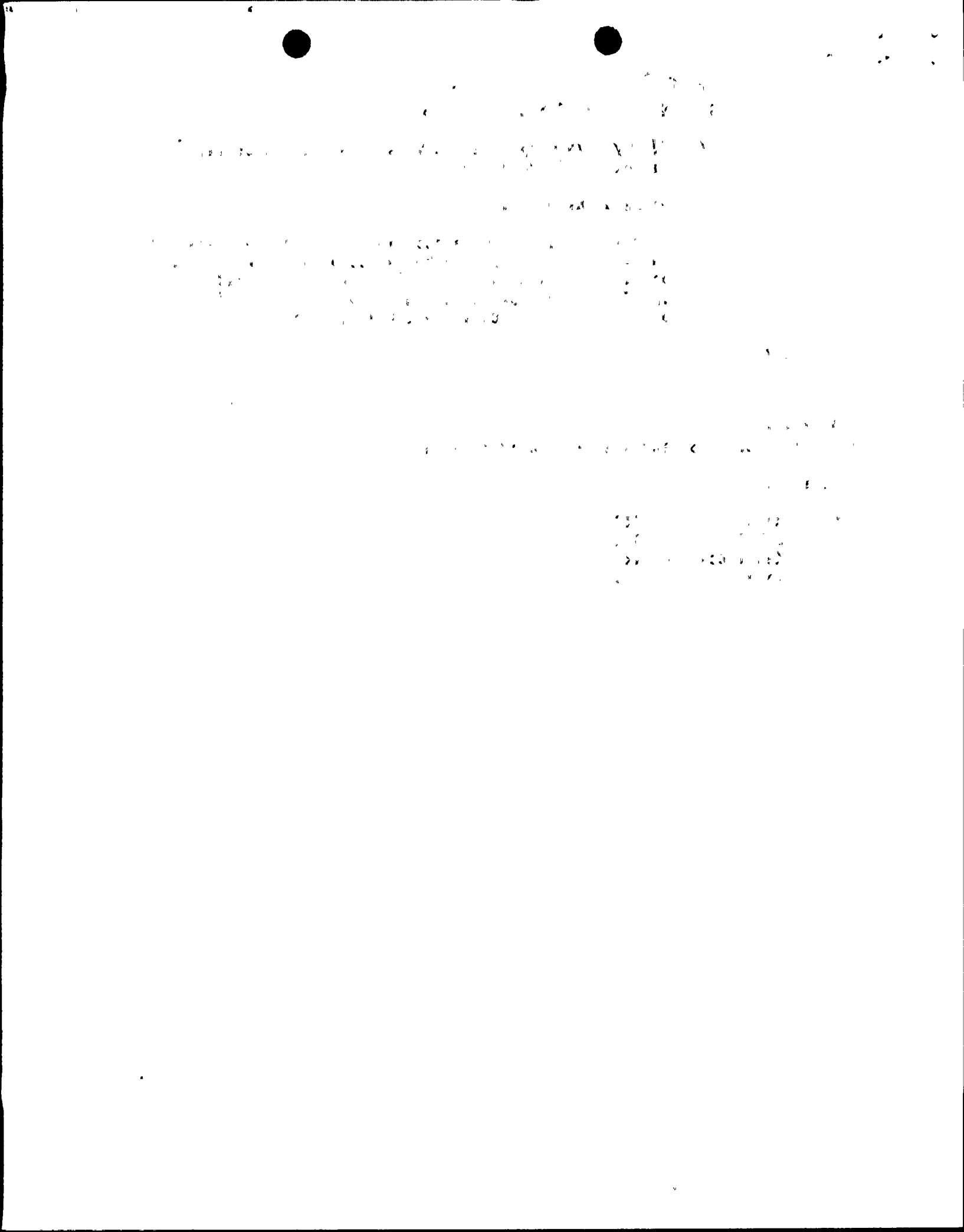

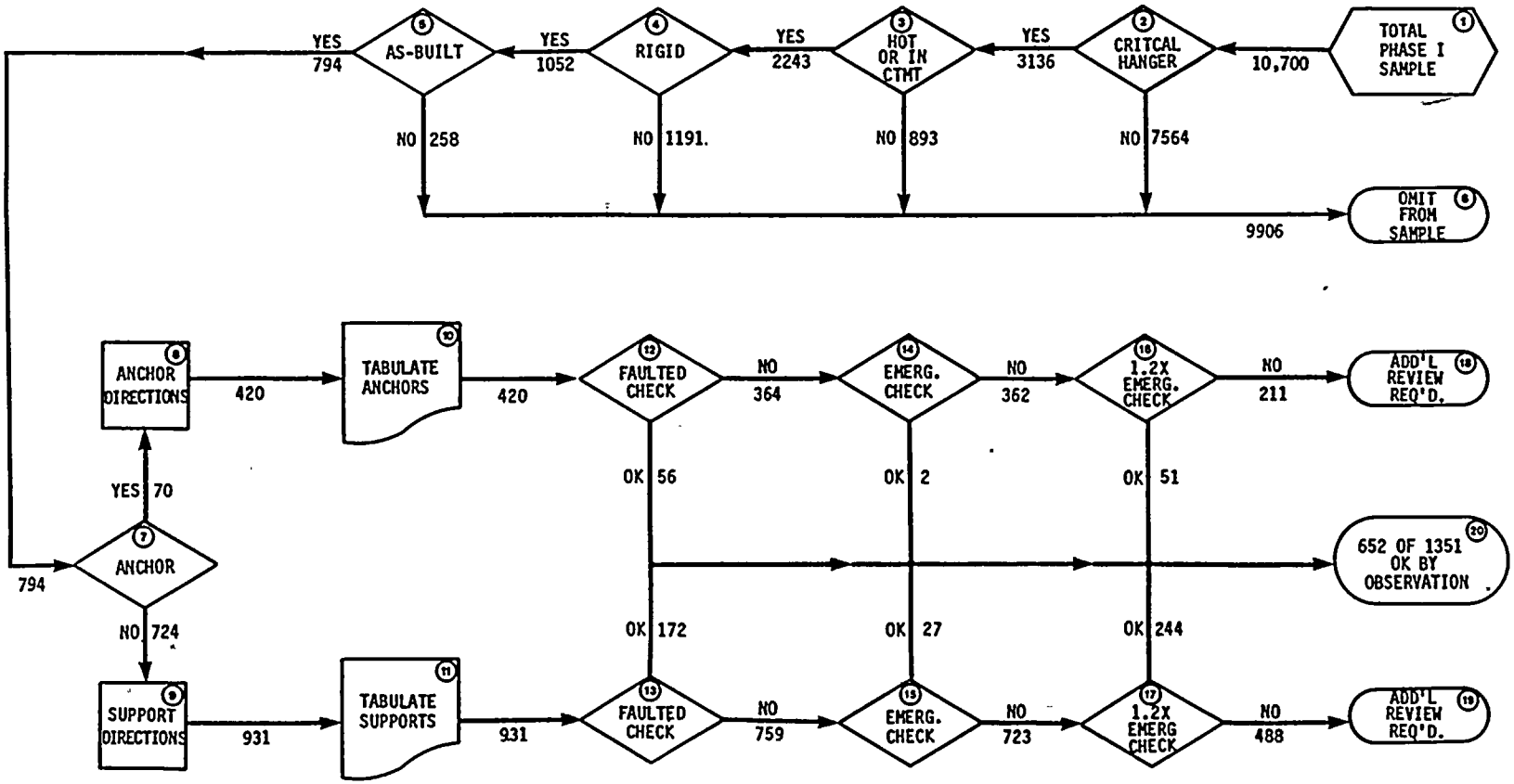

SAFETY EVALUATION REPORT
WNP-2 CONFIRMATORY ISSUE NO. 7
- COMPONENT SUPPORTS -
PHASE I STUDY FLOW CHART

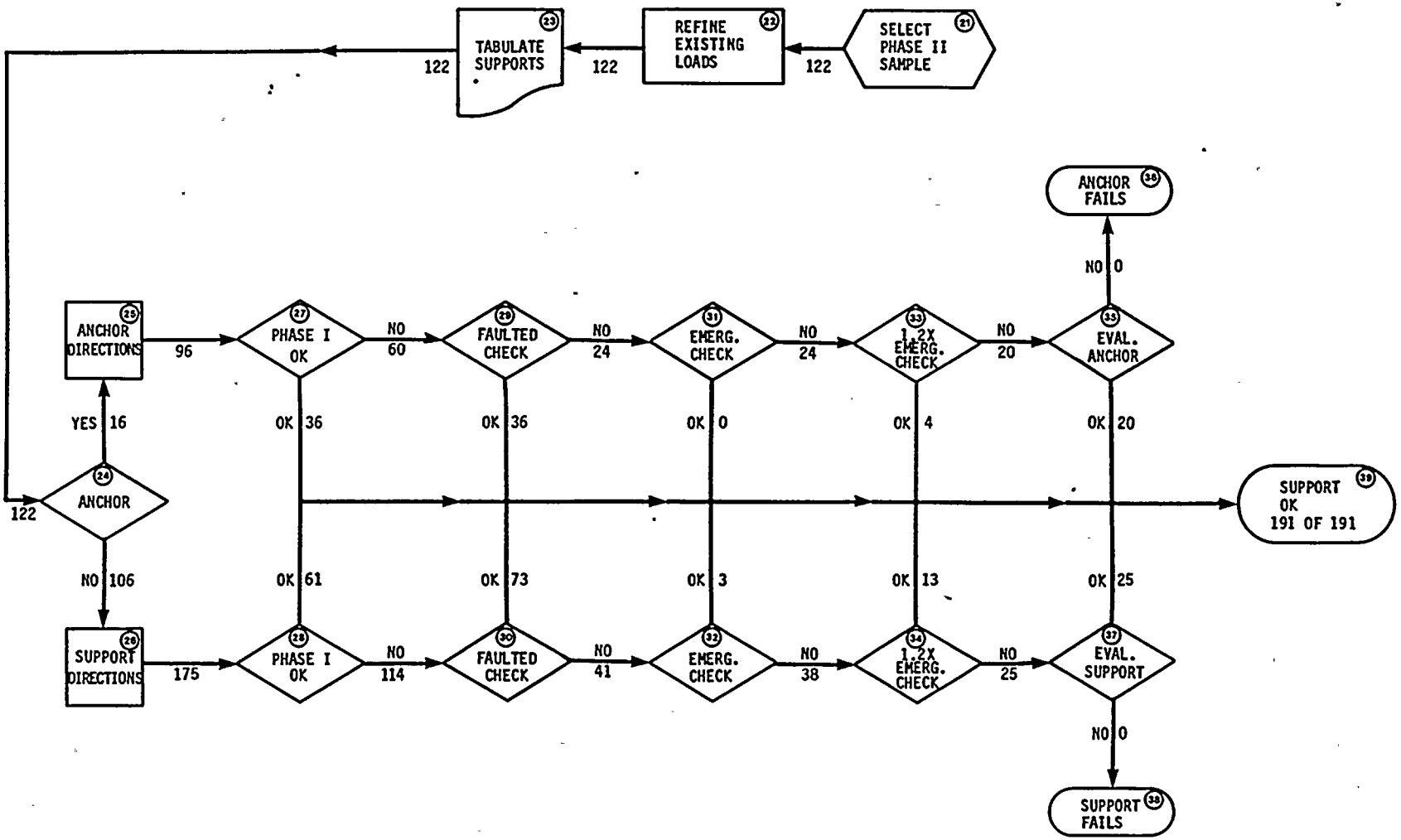

SAFETY EVALUATION REPORT
WNP-2 CONFIRMATORY ISSUE NO. 7
COMPONENT SUPPORTS
PHASE II STUDY FLOW CHART

June 30, [illegible]
G02-83-590

[illegible] Nuclear Reactor Regulation
[illegible] Mr. A. Schwencer, Chief
[illegible] Branch No. 2
[illegible] Licensing
[illegible] Nuclear Regulatory Commission
[illegible] D.C. 20555

Dear Mr. [illegible]

Subject: NUCLEAR PROJECT NO. 2
JUSTIFICATION FOR INTERIM OPERATION

[illegible] letter transmits the Supply System's revised Environmental Equip[illegible] Qualification Report for Safety-Related Equipment. This revision provides an update to the equipment list and responds to concerns raised in Supplement 3 to the Safety Evaluation Report (NUREG-0892). The list [illegible] in this report contains electrical equipment important to safety [illegible] by 10 CFR 50.49(d). A major element of the revision is full development of our Justification for Interim Operation (JIO) of safety-related electrical equipment as required by 10 CFR 50.49.

The NRC Supplement No. 3 to the Safety Evaluation Report (SSER) raised a number of concerns. Some of those are responded to within the document being transmitted by this letter. It is appropriate to address some of the concerns in this letter itself.

The SSER requested discussion on how changes to equipment items resulting [illegible] Bulletins, Circulars, and Information Notices have been, or will [illegible] for their impact on qualification. The Supply System has a [illegible] documented process for review and disposition of such NRC [illegible] changes flowing from such responsive actions are con[illegible] sign change control process.

[illegible] to reevaluate the adequacy of the plant walkdown [illegible] staff's audit. The Supply System has caused system [illegible] to add or delete items from the CIE list. These [illegible] quality of the program and allow us to make the con[illegible] necessary regarding environmental qualification of [illegible] ionally, in the efforts to complete the lists, incor[illegible] complete data entries, mistakes in the list were [illegible].

A049
1/10