REGULATORY INFORMATION DISTRIBUTION SYSTEM (RIDS)

ACCESSION NBR:8109090226 DOC.DATE: 81/09/08 NOTARIZED: NO DOCKET #
FACIL:50-389 St. Lucie Plant, Unit 2, Florida Power & Light Co. 05000389
AUTH.NAME AUTHOR AFFILIATION
UHRIG,R.E. Florida Power & Light Co.
RECIP.NAME RECIPIENT AFFILIATION
EISENHUT,D.G. Division of Licensing

SEE RPI

SUBJECT: Forwards response to NRC requests for addl info which have not been formally submitted on docket. Responses will be incorporated in future amend to FSAR.

DISTRIBUTION CODE: B001S COPIES RECEIVED:LTR 1 ENCL 1 SIZE: 84
TITLE: PSAR/FSAR AMDTS and Related Correspondence

NOTES:

	RECIPIENT ID CODE/NAME		COPIES LTTR	COPIES ENCL	RECIPIENT ID CODE/NAME		COPIES LTTR	COPIES ENCL
ACTION:	A/D LICENSNG		1	0	LIC BR #3 BC		1	0
	LIC BR #3 LA		1	0	NERSES,V.	04	1	1
INTERNAL:	ACCID EVAL BR	26	1	1	AUX SYS BR	27	1	1
	CHEM ENG BR	11	1	1	CONT SYS BR	09	1	1
	CORE PERF BR	10	1	1	EFF TR SYS BR	12	1	1
	EMRG PRP DEV	35	1	1	EMRG PRP LIC	36	3	3
	EQUIP QUAL BR	13	3	3	FEMA-REP DIV	39	1	1
	GEOSCIENCES	28	2	2	HUM FACT ENG	40	1	1
	HYD/GEO BR	30	2	2	I&C SYS BR	16	1	1
	I&E	06	3	3	LIC GUID BR	33	1	1
	LIC QUAL BR	32	1	1	MATL ENG BR	17	1	1
	MECH ENG BR	18	1	1	MPA		1	0
	OELD		1	0	OP LIC BR	34	1	1
	POWER SYS BR	19	1	1	PROC/TST REV	20	1	1
	QA BR	21	1	1	RAD ASSESS BR	22	1	1
	REAC SYS BR	23	1	1	REG FILE	01	1	1
	SIT ANAL BR	24	1	1	STRUCT ENG BR	25	1	1
EXTERNAL:	ACRS	41	16	16	LPDR	03	1	1
	NRC PDR	02	1	1	NSIC	05	1	1
	NTIS		1	1				

SEP 14 1981

RC

TOTAL NUMBER OF COPIES REQUIRED: LTTR 62 ENCL 57

FLORIDA POWER & LIGHT COMPANY

September 8, 1981
Letter L-81-389

Office of Nuclear Reactor Regulation
Attention: Mr. Darrell G. Eisenhut, Director
Division of Licensing
U.S. Nuclear Regulatory Commission
Washington, D. C. 20555

Dear Mr. Eisenhut:

Re: St. Lucie Unit 2
Docket No. 50-389
Final Safety Analysis Report
Requests For Additional Information

Attached are Florida Power & Light Company (FPL) responses to NRC staff requests for additional information which have not been formally submitted on the St. Lucie Unit 2 docket. These responses will be incorporated into the St. Lucie Unit 2 FSAR in a future amendment.

Very truly yours,

Robert E. Uhrig
Vice President
Advanced Systems & Technology

REU/TCG/nlc

Attachments

cc: J. P. O'Reilly, Director, Region II (w/o attachments)
Harold F. Reis, Esquire (w/o attachments)

B001
S 1/1

8109090226 810908
PDR ADOCK 05000389
A PDR

Attachments to L-81-389
September 8, 1981

A. Minutes to Structural Engineering Branch meeting held on September 3, 1981.

B. Revision to Reg. Guide 1.97 Rev. 2 (Additional information on Steam Generator water level indication).

C. Revised response to question 460.2

D. Revised section 9.3.6 (Post accident sampling).

E. Revised section 15.1.5 (Limiting fault 3 events).

F. Revision to FWLB Analysis in response to informal request on AFW flow requirements.

G. Response to question 252.1

H. Revised response to question 420.05

I. Additional information to existing response on SER 8.3 open item - 90% 480V motors.

J. Chapter 8.3 open item - Isolation devices.

8109090226

A meeting was held between the NRC, Structural Engineering Branch, Flordia Power & Light Co. and Ebasco Services on September 3, 1981 in Bethesda, MD. Those in attendance were:

NRC	FP&L	Ebasco
V. Nerses	W.F. Brannen	W. Fan
P.T. Kuo	E.W. Dotson	E. Kowalski
H.E. Polk		R. Russo
		L. Gertler
		J. Burket
		P. Grossman

Items discussed are indicated below:

Audit Item 2 - FP&L resubmitted a revised response, attached. The NRC has agreed to close this item pending staff review.

Audit Item 3 - FPL has agreed to provide the NRC a completed response by September 9, 1981. This is considered an open item.

Audit Items 4 & 5 - FP&L has submitted clarification of headings on the Reactor base mat shear stresss table, attached. In addition, FPL will provide the water ford parametric study detailing the sensitivity of the base slab structural stresses to the soil thickness used in the finite element analysis by September 9, 1981. Item is considered open pending NRC review.

Audit Item 7 - FP&L has agreed to resubmit a revised response, attached. The NRC has agreed to close this item pending staff review.

Audit Item 8 - FP&L will resubmit Figure 9 to indicate radial and tangential components of seismic loading by September 9, 1981. A legend will be provided to explain the variables shown on the computer printouts. Resubmittal will close this item.

Audit Item 11 - NRC is reviewing the response to this item. Item closed.

Audit Item 14 - FP&L will provide mode shapes for horizontal acceleration with Kxx and Kxx=0. This will be provided for information only. This item is considered close.

Audit Item 15 - FP&L resubmitted a revised response referencing audit item 18 for additional clarifications. Item considered open.

Audit Item 16 - NRC is reviewing the use of SRSS summation vs. absolute summation regarding piping relative displacements between structures. This item still considered open.

Audit Item 17 - FP&L will provide applicable portions of the CB&I stress report and the magnitude of the stresses for pipe attached to the containment shell by September 9, 1981. Item closed pending NRC review.

Audit Item 18 - FP&L provided a response to this item, attached. This item considered open pending NRC review.

Audit Item 19 - FP&L resubmitted a revised response adding a reference to page 46, attached, of typical containment building calculations, Section 3. This item considered closed.

Audit Item 20 - FP&L resubmitted a response justifying the use of the 0.63 factor. This item considered open pending NRC review.

Audit Item 21 - FP&L will provide mode shapes to the NRC and determine the amount of shear area reduction by September 9, 1981. This item will be closed pending NRC review.

Audit Item 22 - FP&L will verify that the wall section investigated is the most critical. In addition, FPL will verify the OBE/DBE ratio of 0.66 was used for the design of the reinforcing steel by September 9, 1981. Favorable NRC review will close this item.

Audit Item 24 - FP&L provided a response to this tiem, attached. Item considered open pending NRC review.

Audit Item 25 - FP&L provided a response to this item, attached. Under NRC review (see audit item no. 16).

Audit Item 26 - FP&L provided a response to this item, attached. Item is considered closed.

Masonry Wall Criteria - FP&L has agreed to utilize the NRC's criteria for masonry block wall design dated July 1981. This item is considered closed.

NRC Question 220.22 - FP&L provided a response to this question, attached. Items is considered open.

NRC Question 220.25 - FP&L provided a response to this question, attached. Items considered open pending NRC.

Turbine Missile - FP&L will provide an explanation of the formula used for barrier penetration by September 9, 1981. Favorable review by NRC will close item.

Item No. 2 Verify compatibility of boundary conditions between interfacing structures analyzed by different computer programs.

Response Compatibility of the two computer programs was not considered in the original analysis because the design of the structure was based on the most conservative boundary assumption. (Fixed end condition for negative moments and hinged for positive moments.

The analysis of the secondary shield wall was done assuming fixed boundary at the connection with the primary shield wall.

The resultant boundary reactions derived from the analysis of the secondary shield wall are applied as additional loading to the upper boundary of the primary shield wall.

See attached Fig. 2-1 and calculations.

TAG NO.	VARIABLE DESCRIPTION	R.G. 1.97 Rev. 2	RANGE REQUIRED		EXISTING RANGE	COMMENTS
PIA-1116	Quench Task Pressure	D15	0 to design pressure	3	0-100 paig	One non-safety pressure indicator is provided in the control room. Design pressure is 100 paig therefore the range provided is acceptable.
LIC-9013A LIC-9013B LIC-9013C LIC-9013D LR-9013D. LIC-9023A LIC-9023B LIC-9023C LIC-9023D LR-9023D. LI-9012 LI-9022	Steam Generator Level	D16	From tube sheet to separators	1	0-100% See Figure 420.41-1	Redundant safety grade narrow range indicators are provided in the control room with a span of 183" (LIC-9013A,B,C,D and LIC-9023A,B,C,D). One channel per steam generator is also recorded in the control room (LR-9013D, LR-9023D). In addition wide range non-safety indication for each operator is provided in the control room with a span of 465" (LI-9012, LI-9022). The upper tap for wide and narrow range is located at the same level and is approximately 40" above the steam separators. The narrow range is located approximately 57" below the uppermost steam generator tubes and 50" above the lowest steam generator tubes. The lower tap for the wide range level is located 465" below the upper tap. The lower tap is approximatel 20" above the tube sheet. The combination of these instruments cover the range required although not all the instruments are safety related.
PI-8013A PI-8013B PI-8013C PI-8013D PR-8013D PI-8023A PI-8023B PI-8023C PI-8023D PR-8023D	Steam Generator Pressure	D17	From atomospheric pressure to 20% above the lowest safety valve setting.			Redundant safety grade indication is provided in the control room. One channel per steam generator is recorded. The range provided is not adequate and will be changed to meet the requirements to 0-1200 psia.

(continued next page)

TAG NO.	VARIABLE DESCRIPTION	R.G. 1.97 Rev. 2	RANGE REQUIRED		EXISTING RANGE	COMMENTS
FI-08-1A FI-08-1B	Safety/Relief Valve Positions Flow	D18	Closed - Not Closed	2		Main Steam flow is indicated in the CR. This measurement is accepted for Safety Relief valve position indication. Qualified sensors are being utilized.

Figure 420.41-1
Steam Generator
Technical Manual
Vol. 2

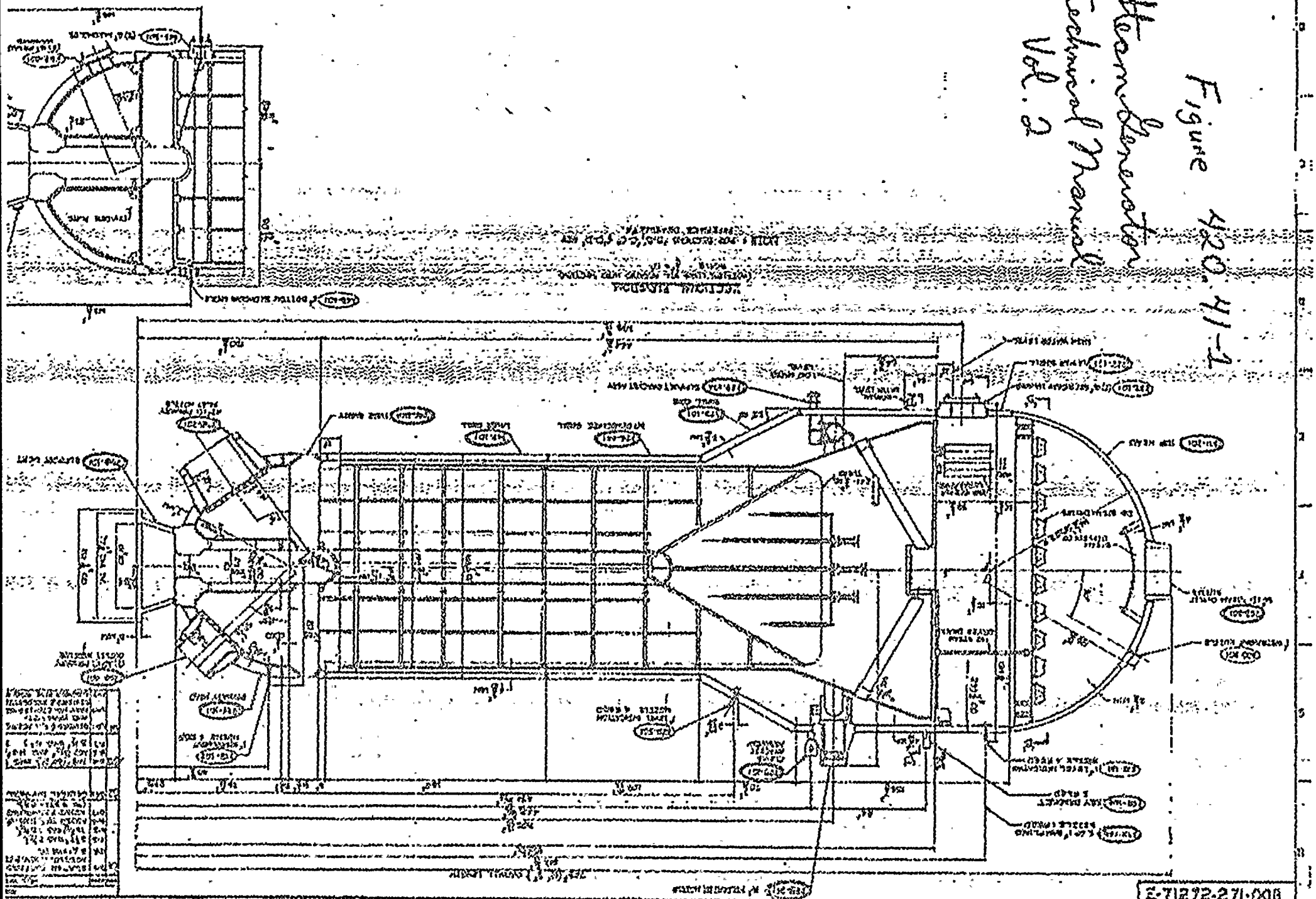

Revised

Question No.

460.2
(11.2)

List outdoor storage tanks that may contain potentially radioactive liquid and describe provisions designed to prevent, collect, and process spills from outdoor storage tanks. It is our position that outdoor tanks should be designed in accordance with Regulatory Position 1.2 in Regulatory Guide 1.143, Rev. 1.

Response:

The Refueling Water Tank (RWT), Condensate Storage Tank (CST), Primary Water Storage Tank (PWST) and the Steam Generator Blowdown Monitor Tank (SGBMT) are outdoor storage tanks which could contain potentially radioactive liquid.

The RWT, CST and PWST are provided with control room level indication and high level alarm. The CST and PWST are also provided with local high level alarm and the SGBMT is provided local level indication and high level alarm.

The SGBMT overflow and drains are routed to the equipment drain tank in the Liquid Waste Management System. The CST is surrounded by the CST building so that overflow and leakage are collected in the building. Level control systems will be provided for the RWT and PWST, to prevent tank overflow.

FSAR Subsection 6.3.2.2.4 and 9.2.3.1.5 will be revised to incorporate the RWT level control system and the PWST level control system respectively. The RWT and PWST level control system will be implemented as a backfit item after OL date.

RWT LEVEL MONITORING SYSTEM

Ebasco has reviewed the St Lucie Unit No. 2 piping design to determine whether overflow occurence of the RWT may be possible due to the arrangement of the RWT volumes and fill lines.

The SL-2 RWT is a 525,000 gallon capacity, 40 feet high, atmospheric tank used to hold borated water for refueling and safety injections operations. The RWT is normally maintained at a minimum tank level of 28.2 feet for safety injection purposes (413,600 gallons required) and at a maximum tank level of 35.3 feet for refueling purposes (Approximately 500,000 gallons). The RWT is provided with an overflow level at 38 feet and a high level alarm set at 37.5 feet, thereby providing 7,520 gallons before tank overflow. The present RWT level monitoring design, depicting the various RWT elevations, is provided schamatically on attached Figure 460.2-1 while a summary of the RWT fill lines is provided in Table 460.2-1.

We have evaluated the possibility of RWT overflow from each of the fill lines and have tabularized the overflow time for each source (see Table 460.2-1). It was determined that the limiting RWT fill source is the 3,100 GPM from the LPSI pumps which allows the operator 2.4 minutes to respond before the tank overflow occurs. All other tank fill sources provide the operator a minimum of twenty (20) minutes before any action is required.

Ebasco has developed an automatic RWT isolation design which will provide enhancements to the current design which will increase the operator response time margin and minimize the potential for RWT overflow.

This level monitoring system will include an air-operated, fail-closed automatic block valve to the LPSI line, which will close upon receipt of high RWT level signal. The existing high RWT level alarm is retained and additional annunciation of high-high RWT level at 37.75 feet, which provides 3760 gallons below overflow, will be provided. This annunciation will receive a signal from a source different from the present high-level alarm signal for additional reliability and will be alarmed in the control room. This alarm will give the operator additional time to initiate any positive action if the RWT fill is inadvertently left open.

PWST LEVEL CONTROL SYSTEM

The flow of water into the primary water tank is controlled by a level control valve in the intake header (demineralized water supply) to the tank. High and low water levels in the tank are annunciated.

In addition to the above, interlocks will be provided to automatically stop the waste condensate pumps and boric acid condensate pumps which discharge to the PWST (see Figure 9.2-4) upong high water level in the tank.

RWT LEVEL MONITORING SCHEME

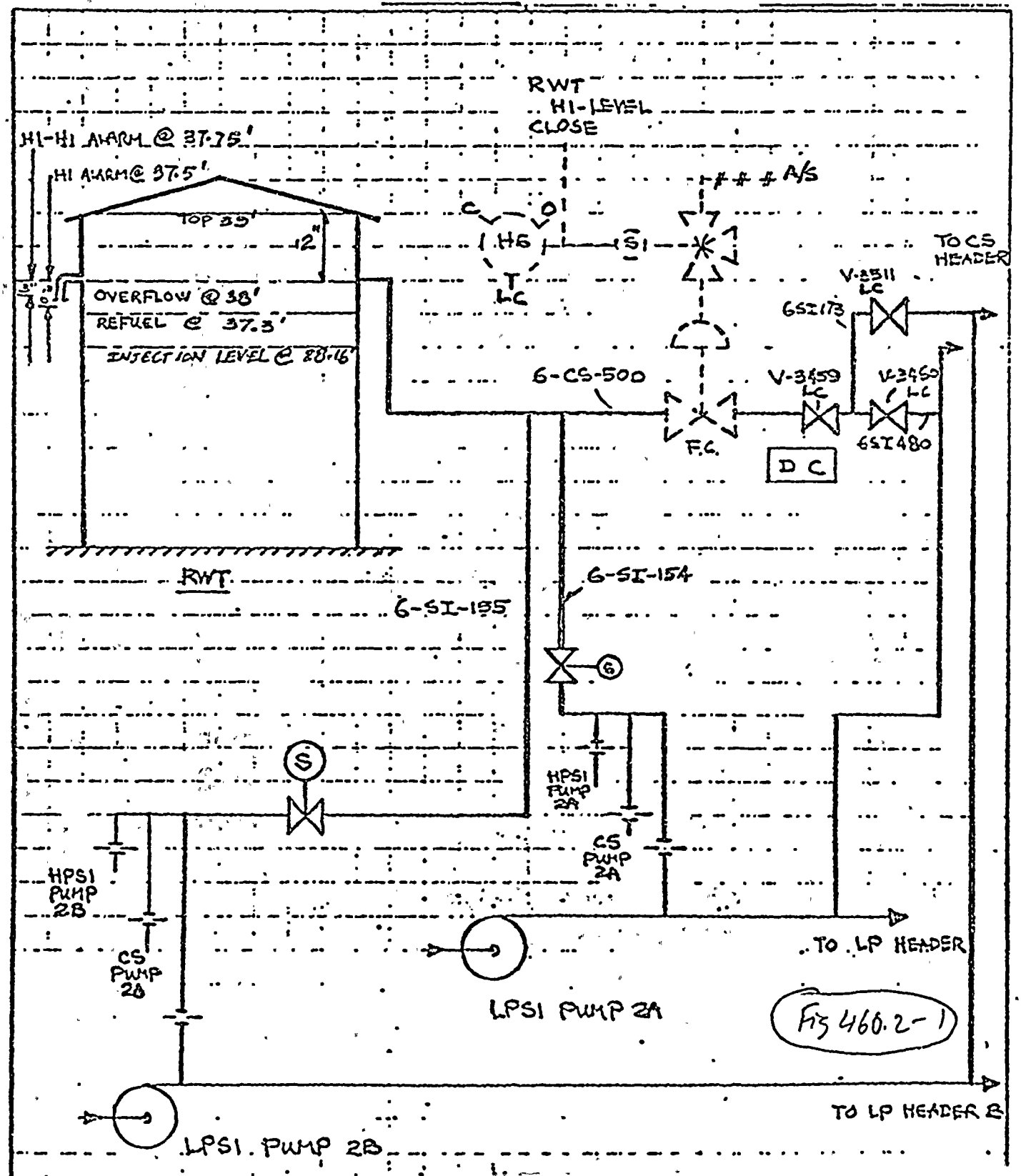

Fig 460.2-1

RWT FILL SOURCES

TABLE 460.2-1

LINES TO RWT	SOURCE	RATED FLOW (gpm)	HIGH ALARM TO OVERFLOW (MIN)
6"-CS-500	LPSI Pumps	3,100	2.4
6"-SI-154	HPSI Recirc.	30	250
	LPSI Recirc	100	75
	CS Recirc	150	50
3"-CS-62	Reactor Drain Pumps	50	150
3"-WM-A56	Hold Up Drain & Recirculation Pumps	80	94
3"-PMW-16	Primary Water Pumps	325	23
3"-FS-556	Fuel Pool Purification Pump	150	50
I-3-CH-938	Boric Acid Pumps	150	50

FRANK WITT

9.3.6 POST ACCIDENT SAMPLING SYSTEM

The Post Accident Sampling System (PASS) consists of a shielded skid-mounted sample station and a remotely located control panel. The PASS provides a means to obtain and analyze pressurized and unpressurized, diluted and undiluted reactor coolant samples and containment building samples.

The Piping and Instrumentation diagrams for the PASS are shown in Figures 9.3-7 to 9.3-9. Design data is provided in Tables 9.3.10, 9.3.11 and 9.3.12.

9.3.6.1 Design Bases

The PASS is designed in accordance with the criteria stated in Section II.B.3 of Enclosure 3 to NUREG 0737. The quantitative design criteria for the PASS are as follows:

a) The PASS provides a means to promptly obtain a reactor coolant liquid, containment building sump liquid, and containment building gas samples. The combined time required for sampling and analysis is less than three hours.

b) The PASS allows for post-accident sampling with resulting personnel radiation exposure not exceeding the criteria of GDC 19 (Appendix A to 10 CFR Part 50).

c) The PASS is capable of accommodating an initial reactor coolant radiochemistry spectrum corresponding to a postulated release equivalent to that assumed in Regulatory Guide 1.4, Assumptions Used for Evaluating the Potential Radiological Consequences of a Loss of Coolant Accident for Pressurized Water Reactors, Rev. 2 dated June, 1974, and Regulatory Guide 1.7, Control of Combustible Gas Concentrations in Containment Following a Loss of Coolant Accident, Rev. 2 dated September 1976.

d) The PASS provides a means to remotely quantify pH and the concentrations of total dissolved gas, hydrogen, oxygen and boron in the liquid samples.

e) Sample flow is returned to the containment to preclude unnecessary contamination of other auxiliary systems and to ensure that radioactive waste remains isolated within the containment.

f) Components and piping are designed to Quality Group D (as defined in Regulatory Guide 1.26) non-seismic requirements. The equipment is located downstream of double isolation valves from safety code systems.

9.3.6.2 System Description

The requirements for post-accident sampling of the reactor coolant and containment building atmosphere are met through the Post-Accident Sampling System (PASS). The PASS provides a means to obtain pressurized and unpressurized reactor coolant samples and containment building atmosphere samples. A reactor coolant sample can be drawn directly from the Reactor Coolant System (RCS) whenever the RCS pressure is between 200 psig and 2485 psig. RCS sample lines are provided with orifices inside containment so as to limit the flow from any postulated break in the sample line. At pressures below 200 psig, reactor coolant samples can be drawn from a Safeguards System sample line. This pathway also provides a means of sampling the containment building sump during the recirculation mode of Safeguards System operation. A containment building atmosphere sample can be drawn with containment building pressure between 10 psia and 75 psia. All sample flow is returned to the containment building to preclude unnecessary contamination of other auxiliary systems and to ensure that high level waste remains isolated within the containment. These sample process pathways were selected to insure a representative sample under all modes of decay heat removal. The PASS sampling flow rates are provided in Table 9.3.10.

The PASS consists of a remotely located control panel and a skid-mounted sample station which are designed to maintain radiation exposures to plant personnel as low as reasonably achievable (ALARA) and which is located to minimize the length of sample lines. The PASS is interfaced with the existing reactor coolant and safeguards system sample lines. Post accident sampling does not require an isolated auxiliary system to be placed in operation.

The PASS is a totally closed system (i.e., samples taken from containment are returned to the containment). The grab samples are extracted from sample vessels by injection of a syringe through a septum plug mounted in the vessels. In addition, the PASS sample station skid is provided with a ventilation flowpath that is sized for 333 scfm in air flow from the surrounding room to the ventilation system exhaust. The exhaust air is directed through an activated charcoal filter for iodine removal.

The PASS provides the capability for remote chemical analyses of the reactor coolant including total dissolved gas concentration, dissolved hydrogen and oxygen concentration, boron concentration and pH. Reactor coolant analysis is provided through the use of an undiluted grab sample facility. Shielded grab samples of the depressurized undiluted reactor coolant liquid may be obtained. Unshielded, depressurized and diluted grab samples of the degassed reactor coolant liquid, reactor coolant dissolved gas and containment building atmosphere may also be obtained.

The operation of the PASS for collecting and analyzing reactor coolant and containment building atmosphere samples may be categorized as (1) reactor coolant sample purging, (2) reactor

coolant sample gaseous analyses and dilution, (4) undiluted liquid grab sample collection, (5) containment building atmosphere sample purging and dilution, and (6) system flushing. An operation description for these categories is provided below:

Reactor coolant sample purging is accomplised by directing the sample flow through the system isolation valves, the sample vessel/heat exchanger, the pressure reducing throttle valve, and out to the containment building sump. At reactor coolant pressures of less than 200 psig the containment sump sample flow is purged in the same manner using the safeguards pump discharge connection.

Reactor coolant gaseous analysis is performed on a pressurized sample which is collected by isolating the sample vessel/heat exchanger. Total dissolved gas concentration is determined by degassing the sample. This is accomplished by depressurization and circulation by alternate operation of the burette isolation valve and the sample circulation pump. The resulting displacement of liquid into the burette is used to calculate the dissolved gas concentration. The collected gases, which have been stripped from the liquid, are then directed through a float valve for moisture separation and circulated through hydrogen and oxygen analyzers. After recording the hydrogen and oxygen gas concentrations, the gas sample vessel, which contains nitrogen, may be placed on line to dilute the gas volume. This dilution operation reduces the radiation levels such that local samples can be drawn from the gas sample vessel, if desired, by injection of a syringe through a septum plug mounted in the vessel. Prior to sample withdrawal, additional dilution, which may be necessary for this quantification, may be performed by further nitrogen addition, circulation and venting.

Reactor coolant liquid analyses is accomplished by reinitiating and directing the sample flow through the in-line chemistry analysis equipment. The gas residence chamber and float valve downstream of the throttle valve allows for automatic venting of gases coming out of solution. This venting is required in order to prevent gas bubble interference with flow rate and chemistry measurements in the downstream instrumentation. Boron and pH readings are obtained from the in-line instrumentation. A small fixed volume of depressurized liquid sample (collected in a four-way valve) is then drained to the depressurized liquid sample vessel and a sample is withdrawn in the same manner as described above for the gas sample.

An undiluted liquid grab sample for chloride analysis can be collected by directing reactor coolant purge flow through the undiluted depressurized liquid sample vessel. This vessel is provided with a lead shielded container and cart for transfer of sample to the analysis location. The isolation valves for the vessel are provided with stem extensions penetrating the shielding.

INSERT A

Containment building atmosphere sampling is initiated by opening the containment isolation valves and by using the containment sample pump to purge the air sample through the system. Purge flow is directed back to containment. A sample is manually withdrawn from the containment sample vessel containing nitrogen. The initial nitrogen volume dilutes the sample to levels acceptable for withdrawal. A containment air sample may then be withdrawn from the containment sample vessel in the same manner as described previously for the reactor coolant samples.

System flushing of the liquid and gaseous portions is accomplised by purging with demineralized water and nitrogen, respectively, to reduce personnel exposure during withdrawal of the diluted samples and to reduce contamination plateout between samples.

Radionuclide analyses are performed on grab samples. These samples are counted in standard radionuclide counting equipment.

Grab sample techniques are utilized for backup analysis.

Backup boron analysis is performed using atomic absorption techniques.

Containment hydrogen analyzers are described in Subsection 6.2.5.

INSERT B

9.3.6.3 Component Description

The major PASS components are described in this section. The principal component data summary including design code is provided in Table 9.3.11.

1. Sample Station

The sample station is a free-standing skid-mounted enclosure. The enclosure contains the piping, valves, components and instrumentation necessary to provide the sampling and analysis capability. The enclosure is provided with louvers sized to pass up to 333 scfm from the surrounding room to the ventilation system suction connection in the upper portion of the enclosure. This air flow precludes any possible buildup of radioactive or hydrogen gas and provides for removal of heat generated by internal components. The enclosure is provided with removable panels on all four sides to ensure accessibility for maintenance.

2. Sample Circulation Pump

The sample circulation pump is a peristaltic type postitive displacement pump. This pump is capable of pumping liquids and/or gases. The pump will be used in the total gas, hydrogen, and oxygen gas analyses operations to strip the gases out of solution in the sample fluid and circulate them through the hydrogen and oxygen analyzers.

3. Surge Vessel Pump

The surge vessel pump is a progressing cavity (helical) pump. The pump is used to pump down the surge vessel contents to the containment building sump and is also used in the calibration operation of the pH in the liquid sample line.

4. Containment Sample Pump

The containment sample pump is a vacuum pump/compressor unit that operates as a positive displacement compressor using a stainless steel diaphram. The pump is used to collect a containment atmosphere sample and to dilute the sample via circulation through the containment sample vessel.

5. Gas Sample Vessel

The gas sample vessel is a 12,000 ml sample vessel initially filled with nitrogen gas. The vessel supplies the gas analysis loop with nitrogen gas to dilute the radioactive gases present in the sample line. The vessel is equipped with a septum plug which allows the operator to withdraw a diluted gaseous sample with a syringe for radiological analysis.

6. Depressurized Liquid Sample Vessel

The depressurized liquid sample vessel is a 12,000 ml sample vessel. This vessel collects a liquid sample trapped in the four-way valve located above the sample vessel. The vessel is partially filled with demineralized water before the sample is drained into the vessel. Additional demineralized water is then added to obtain the proper dilution factor so that a liquid sample can be withdrawn for radiological analysis. This vessel is equipped with a septum plug for sample withdrawal using a syringe.

7. Containment Sample Vessel

The containment sample vessel is a 12,000 ml sample vessel that is initially filled with nitrogen gas for dilution. The containment sample pump draws a sample from containment and circulates it through the sample vessel where the nitrogen gas dilutes the sample so that it can be withdrawn for radiological analysis. This vessel is equipped with a septum plug for sample withdrawal.

8. Surge Vessel

The surge vessel has a 10 gallon capacity and serves as a vent and drain tank for the depressurized liquid sample vessel and the total gas analysis burette. This vessel can also be filled with buffer solution used to calibrate the in-line pH meter.

9. Sample Vessel/Heat Exchanger

The sample vessel/heat exchanger is a vertically mounted, shell and tube type heat exchanger. The heat exchanger uses component cooling water to cool the reactor coolant sample flow from a maximum RCS temperature of 650° to 120°F to allow low temperature sample analysis. The tube side of the heat exchanger serves as a sample vessel for collection of a pressurized reactor coolant sample.

10. Stainless Steel Burette

The stainless steel burette has a 1,000 ml capacity. The burette is used to determine the amount of total gas present in the sample fluid by measuring a difference in the fluid level of the burette upon degassification of the pressurized reactor coolant sample.

11. Strainer

The strainer is designed to remove insoluble particles which may cause sample station chemistry instrumentation to become plugged. The strainer can be backflushed with demineralized water remotely by operation of valves at the control panel.

12. Grab Sample Facility

The grab sample facility is designed to obtain a 75 cc undiluted sample of reactor coolant liquid. The facility consisted of a lead shielded sample vessel and valves mounted on a cart for transport within the plant. The facility is manually operated.

13. Gas Residence Chamber

The gas residence chamber is a horizontally mounted lead shielded baffled cylindrical vessel. The chamber is used to remove undissolved gases from reactor coolant samples to prevent interference with the in-line process monitors.

14. Charcoal Exhaust Filter

The charcoal filter is designed to remove radioactive iodine and particulate material from the enclosure ventilation exhaust. The filter is mounted in a separate housing located on top of the sample skid enclosure.

9.3.6.4 Instrumentation and Control Description

The major PASS instruments and controls are described in this section. The on-line process monitor data is provided in Table 9.3.12. INSERT D

1. Control Panel

The panel is designed to meet NEMA-12 requirements. All sample system non-code isolation valves and pumps are controlled from this panel. Indication of all process parameters and chemistry readouts are displayed on the panel. To facilitate system and operability all controls and indications are arranged in a mimic of the system. All process pumps and valves are equipped with hand switches at the control panel.

2. Heat Tracing

The containment building atmosphere sample piping is heat traced to limit plateout of radioiodine and condensation of containment atmosphere vapor. The heat tracing ensures a representative gas sample.

INSERT E

3. Boron Meter

The Boron Meter is a specific gravity measuring device which determines and remotely indicates the concentration of boron present in the liquid sample.

4. pH Meter

The pH meter determines and remotely indicates pH in the liquid sample.

5. Hydrogen Analyzer

The hydrogen analyzer is a thermal conductivity device that determines and remotely indicates the volume percent of hydrogen in the gas stripped from the reactor coolant.

6. Oxygen Analyzer

The oxygen analyzer is a paramagnetic device that determines and remotely indicates the volume percent of oxygen in the gas stripped from the reactor coolant.

9.3.6.5 System Evaluation

The location of the post-accident reactor coolant and containment atmosphere sampling system are in an area of relatively low post-accident background radiation. This ensures compliance with the personnel exposure limits of NUREG 0737 during sampling and analysis. Additional plant shielding along with selective routing of interconnecting piping to the existing sampling system ensures that (1) the exposure limits for personnel are not exceeded and (2) the on-site radiochemistry analysis equipment is available for

post-accident sample analyses. The sample station is also physically separated from safety related equipment such that failure of the associated non-seismic equipment does not cause damage to the safety related equipment.

INSERT C

Cooling water to the reactor coolant sampling system is available during post-accident conditions to enable low temperature sample analyses. Overrides are also available to enable opening of containment isolation valves following a CIAS so that post-accident sampling can be accomplished. Control for the reactor coolant sampling system return containment isolation valve is provided in the control room. An interlock is provided to ensure that this valve and the containment sump isolation valve is open before the system inlet isolation valve is open.

As much as practicable, reactor coolant sampling system connecting piping is pitched downward at least 10 degrees to prevent settling or separation of solids contained by the sample. Traps and pockets in which condensate or crud may settle are avoided since they may be partially emptied with changes in flow conditions and may result in sample contamination.

9.3.6.6 Testing and Inspection

The sample station skid and control panel are equipped with doors for testing and inspection during normal operations. The sample station is provided with removable panels on all four sides for inspection. Each component is tested and inspected prior to installation in the sample system. Instruments are calibrated during initial system installation. Automatic controls are tested for actuation at the proper setpoints. The system is operated and tested upon installation with regard to flow paths, flow capacity and mechanical operability.

INSERT F

Periodic calibration is performed according to the schedule provided in Table 9.3.13. The PASS is designed to function for six months under post-accident conditions without recalibration. System operability will be tested at a frequency minimum of six months, coinciding with the required six-month Emergency Plan sampling exercise. Such operability tests will check the functioning of all aspects of the system.

9.3.6.7 Operator Training

All FP&L Chemistry Department technicians will be trained both in the classroom and in actual hands-on operations, as a function of the Chemistry Department training program. Operating procedures will be developed and they will be consistent with the recommendations of the PASS supplier (Combustion Engineering)

Insert A

In accordance with item II.B.3 of NUREG-0737 (pg 3-67,item 4). PASS has the capability to monitor total dissolved gases and H_2 concentration. The capability of monitoring dissolved O_2 will be in accordance with Regualtory Guide 1.97 (R2).

Insert C

Sufficient shielding will be provided around the post-accident sampling system components to limit personnel exposure to the GDC-19 limits. Regulatory Guide 1.4 source terms will be used.

Insert D

The post accident sampling panel will be powered from power panel 2AB which is capable of being powered from the diesel generator in the event of a loss of offsite power. The electrical cables associated with the post accident sampling panel and associated instruments will be routed in accordance with Reg. Guide 1.75, physical Independence of Electrical System (Rev 1), as associated circuits.

Insert E

Heat tracing circuits will be electrically connected to the respective Boric Acid Heat Tracing Panels which are electrically independent, physically separated and are connected to the diesel generator in the event of a loss of offsite power.

Insert F

Post-accident sampling system valves which are required to operate after an accident and are not accessible for repair will be qualified to the accident environment in which they operate. Environmental qualification is addressed in FSAR Section 3.11.

Insert B

Radiological analysis of PASS grab samples will be used to identify the occurrence and type of core damage. Laboratory analysis of PASS grab samples using germanium detectors and multichannel analysis will be employed to identify the presence of selected radiosotopes which are indicative of the various kinds of core damage. Core damage will be categorized according to clad failure, fuel overheat, and fuel melt. The analysis will take into account the core burnup, coolant water volume, and coolant temperature corrections. A plant procedure in compliance with NUREG-0737 will be written by June 1982.

Table 9.3.10

Post-Accident Sampling System Flow Rates

Source	Nominal Flow
Reactor Coolant Hot Leg	0.2 - 1.0 gpm
Containment Building Sump	0.2 - 1.0 gpm
Containment Atmosphere	0.2 cfm

Table 9.3.11

Design Data for Post-Accident Sampling System Components

1. Sample Circulation Pump

Type	Peristaltic Positive Displacement
Fluid	Post-Accident Reactor Coolant
Suction Pressure (max) psig	5
Suction Temperature (max) °F	160
Rated Flow, gpm	1
Rated Head, ft	50
Code	Non-Code

2. Surge Vessel Pump

Type	Positive Displacement
Fluid	Post-Accident Reactor Coolant
Suction Pressure (max) psig	5
Suction Temperature (max) °F	160
Rated Flow, gpm	1
Rated Head, ft	185
Code	Non-Code

3. Containment Sample Pump

Type	Vacuum Pump/Compressor
Fluid	Post-Accident Containment Atmosphere
Suction Pressure (max) psia	10-75
Suction Temperature (max) °F	300
Rated Flow, cfm	0.2
Maximum Discharge Pressure, psig	95
Code	Non-Code

4. Sample Vessel/Heat Exchanger

Type	Shell (cooling); Tube (sample flow)
Tube Sides:	
Fluid	Post Accident Reactor Coolant
Piping Design Pressure (max) psig	2485
Inlet Temperature (min/max) °F	120/650
Shell Side:	
Fluid	Component Cooling Water
Piping Design Pressure, psig	150
Inlet Temperature (min/max) °F	65/120
Flow (max) gpm	30
Code	Non-Code

Table 9.3.11 (cont'd)

Design Data for Post-Accident Sampling System Components

5. Depressurized Liquid Sample Vessel

Internal Volume, cc	12000 ml
Design Pressure, psig	50
Design Temperature, °F	200
Operational Pressure, psig	5
Operational Temperature, °F	120
Material	Stainless Steel 316L
Fluid	Post-Accident Reactor Coolant
Code	Non-Code

6. Gas Sample Vessel

Internal Volume, cc	12000
Design Pressure, psig	50
Design Temperature, °F	200
Operational Pressure, psig	5
Operational Temperature, °F	120
Material	Stainless Steel 316L
Fluid	N_2, H_2, O_2, Fission Products
Code	Non-Code

7. Containment Sample Vessel

Internal Volume, cc	12000
Design Pressure, psig	50
Design Temperature, °F	100
Operational Pressure, psig	0 to 20
Operational Temperature, °F	275
Material	Stainless Steel 316L
Fluid	Steam, Air, H_2, Fission Products
Code	Non-Code

8. Surge Vessel

Internal Volume, gal.	10
Design Pressure, psig	100
Design Temperature, °F	200
Operational Pressure, psig	5
Operational Temperature, °F	120
Material	Stainless Steel 316L
Fluid	Post-Accident Reactor Coolant
Code	Non-Code

Table 9.3.11 (cont'd)

Design Data for Post-Accident Sampling System Components

9. Burette

Internal Volume, cc	1000
Design Pressure, psig	100
Design Temperature, °F	200
Operational Pressure, psig	5
Operational Temperature, °F	120
Material	Stainless Steel 316L
Fluid	Post-Accident Reactor Coolant
Code	Non-Code

10. Strainer

Type	"Y" Type Mesh
Particle Size Retention	250 Microns
Operating Pressure, psig	2235
Operating Temperature, °F	621
Design Flow, gpm	2
Operating Flow (max) gpm	1
Clean ΔP (psig @ gpm)	2 @ 1
Loaded ΔP (psig @ gpm)	10 @ 1
Collapse ΔP (psig @ gpm)	70 @ 1

11. Gas Residence Chamber

Design Pressure, psig	130
Design Temperature, °F	350
Operational Pressure, psig	80
Operational Temperature, °F	120
Volume,cc	4600
Fluid	Post-Accident Reactor Coolant
Material	Stainless Steel 316L
Code	Non-Code

12. Exhaust Charcoal Filter

Type	Replaceable Cartridge
Type Element	Activated Charcoal
Design Flow, scfm	333
Operational Flow, scfm	250-333
Operational Pressure	Atmospheric
Fluid	Aux. Bldg. Atmosphere
Clean ΔP, inches water @ scfm	< 1 @ 333
Loaded ΔP, inches water @ scfm	1 @ 333
Code	Non-Code

Table 9.3.12

Design Data for Post-Accident Sampling System
Process Instruments

Instrument	Description	Accuracy	Range
Boron Meter	Density Sensor	± 100 ppm	0 to 5000 ppm
pH Meter	Electrode Sensor	± 0.05	3 to 12
Hydrogen Analyzer	Thermal Conductivity Sensor	± 2% of scale	0 to 100%, 0 to 10%
Oxygen Analyzer	Paramagnetic Sensor	± 2% of scale	0 to 25%, 0 to 5%

Table 9.3.13

Instrument Calibration Frequency

Component Identification	Calibration Frequency	Maintenance Frequency	Maintenance or Calibration Technique
Charcoal Filter	-	as req'd	Replace filter when saturated, or when dosage is unacceptable (test with freon)
Pumps	-	as req'd	As required
Valves	-	18 mos.	Functionally test and repair as required
Level Instruments	6 mos.	-	Reset zero and span against known vessel levels
Pressure Instruments	6 mos.	-	Check accuracy against a standard
Pressure Instruments with alarm & control functions	6 mos.	-	Check pressure setpoints
pH Monitor	6 mos.*	-	Calibrate with buffer solution
H_2 & O_2 Meters	6 mos.-1 yr	-	Set zero and span using standard gases
Boron Meter	6 mos.*	-	Check zero, span, and temp. compensator against test boron solution and demineralized water
Flow Meters	6 mos.	-	Check accuracy against a standard
Panalarm	6 mos.	-	Check alarm function

*Calibration frequency can be extended until instrument malfunctions or gets unstable readings in a post-accident situation

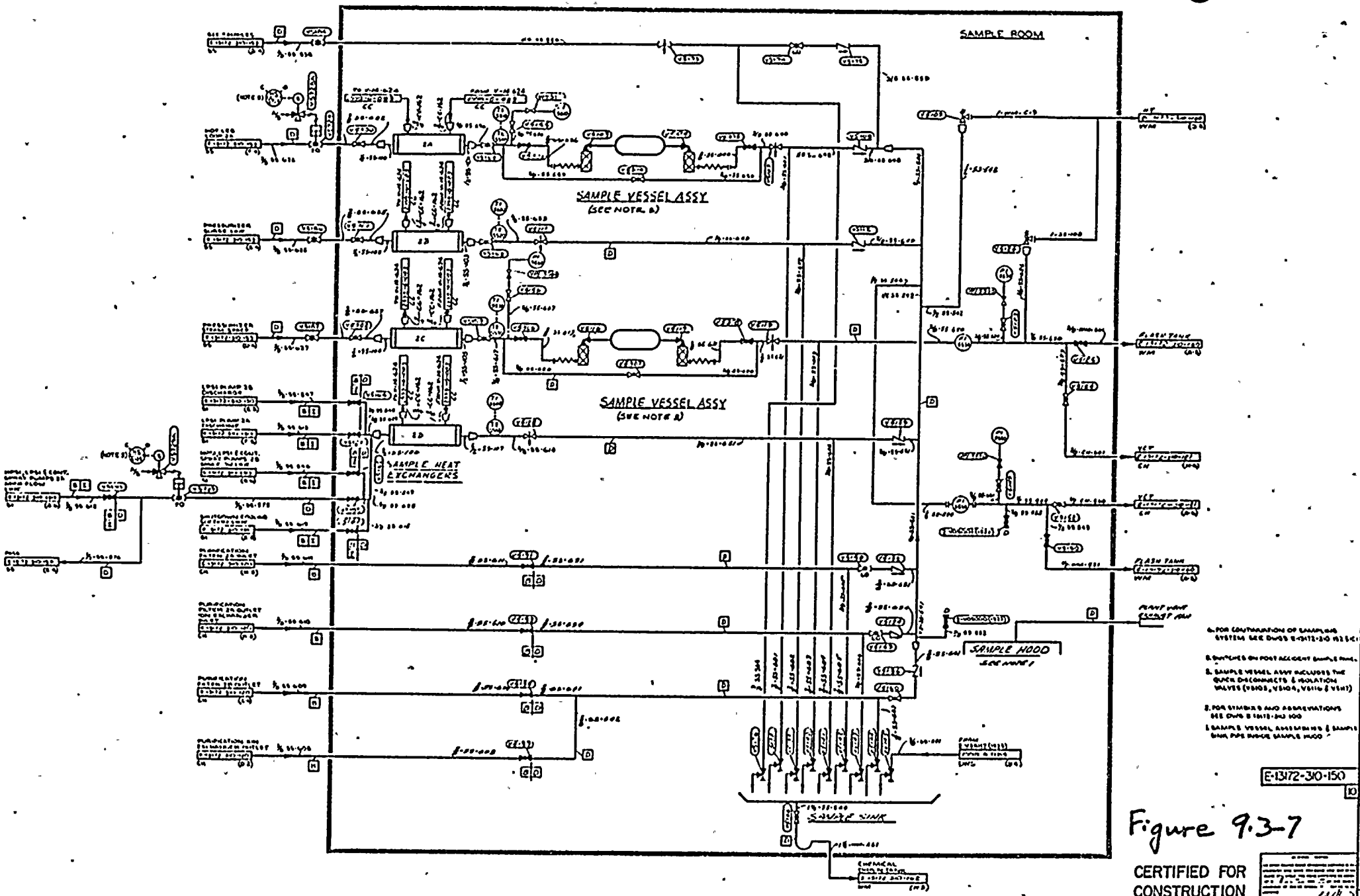

Figure 9.3-7

CERTIFIED FOR CONSTRUCTION

SAMPLING SYSTEM P&I DIAGRAM

E-13172-310-150 0

8 7 6 5 4 3 2 1

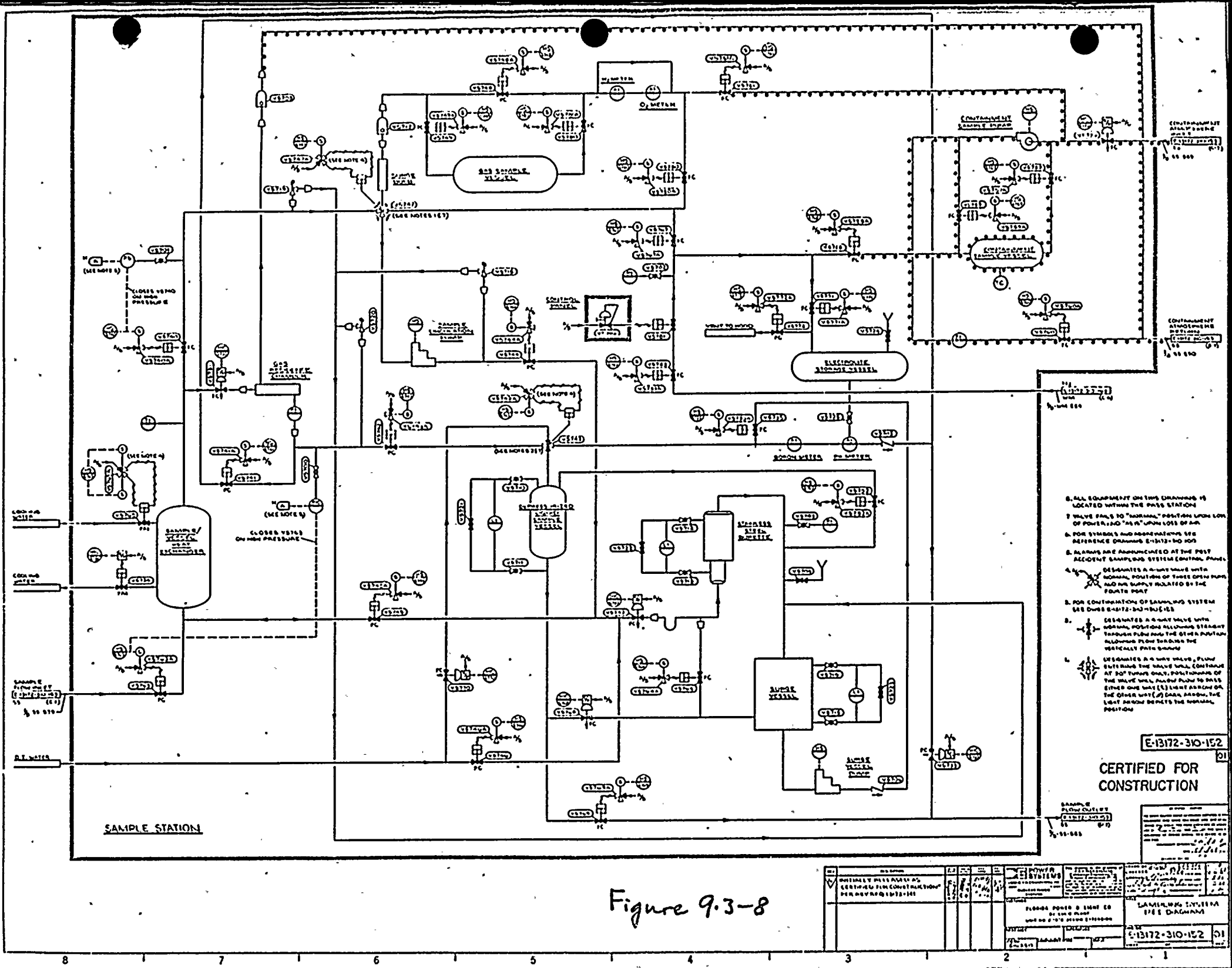
SAMPLE STATION
CERTIFIED FOR CONSTRUCTION
E-13172-310-152
SAMPLING SYSTEM P&ID DIAGRAM

Figure 9.3-8

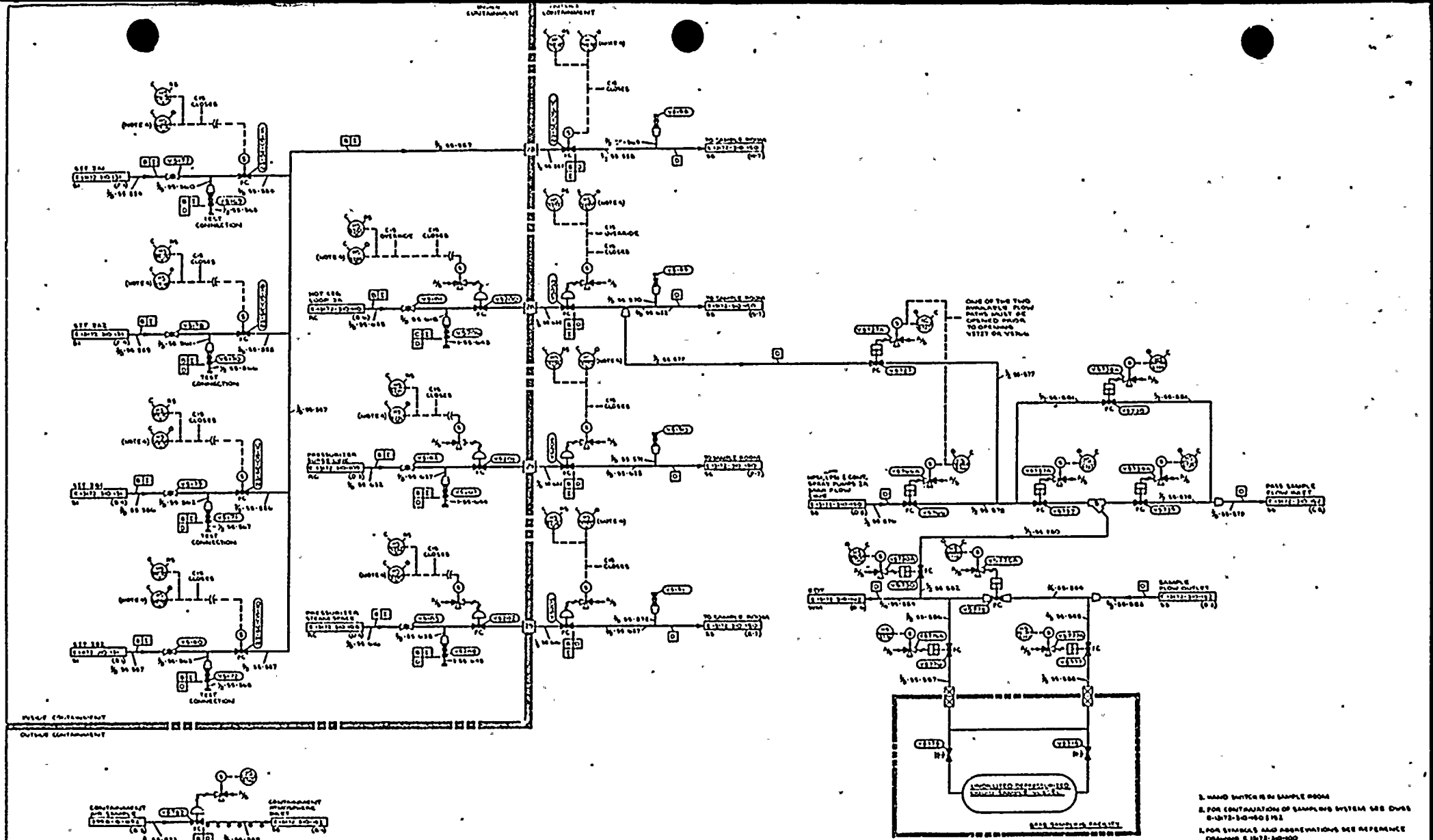

Figure 9.3-9

CERTIFIED FOR CONSTRUCTION

SAMPLING SYSTEM P&E DIAGRAM

E-13172-310-153

AKSTULEWICZ, THROM

15.1.5 LIMITING FAULT 3 EVENTS

15.1.5.1 Limiting Offsite Dose Event - Loss of Main Steam Outside Containment, Upstream of MSIV With Loss of Offsite Power as a Result of Turbine Trip.

15.1.5.1.1 Identification of Event and Causes

All Limiting Fault-3 event groups and event group combinations resulting in an increased heat removal by the secondary system shown in Table 15.1.5-1 were compared to find the event resulting in the maximum offsite doses. The loss of main steam-large, outside containment, upstream of MSIV with loss of offsite power as a result of turbine trip and with technical specification primary to secondary leakage through the steam generator tubes was identified as the limiting LF-3 event.

The event groups and event group combinations evaluated and the significance of the offsite doses for each are indicated in Table 15.1.5-1. All events indicated as insiginficant (I) would produce offsite doses well within the acceptance guideline in Table 15.0-4. All events indicated as significant (S) produce offsite doses within the acceptance guideline.

The loss of main steam-large, outside containment may occur due to a break in the 34 inch main steam line.

Breaks ranging from 0.056 ft^2 area up to the double-ended rupture of the 34 inch main steam line break are included in this event group. Events with break areas less than 0.056 ft^2 are classified in the small loss of main steam event group. The offsite doses were maximized by assuming an intermediate break (1.8 ft^2) which results in a minimum DNBR below 1.19. Technical specification tube leakage also increased the offsite doses. The loss of offsite power as a result of turbine trip causes the coastdown of all reactor coolant pumps.

Of the two event groups, loss of main steam-large inside containment and loss of main steam-large outside containment, in the LF-3 category, loss of main steam-large, inside containment will not cause a significant amount of steam release to the atmosphere and therefore will not result in significant offsite doses. Loss of main steam-large, outside containment with a loss of offsite power and a technical specification tube leakage is the limiting event combination, since the decreased RCS flow due to the loss of power results in degradation of fuel performance, and the technical specification tube leakage maximizes the release of activity to the atmosphere.

DRAFT

DRAFT

15.1.5.1.2 Sequence of Events and Systems Operation

Table 15.1.5.1-1 presents a chronological list and timing of system actions which occur following the large loss of main steam event outside containment with a loss of offsite power as a result of turbine trip.

The sequence of events and systems operation are indentical to those presented in 15.1.5.3.2 and Figure 15.1.5.3-1 with the exception of the response of systems actuated by the occurrence of high containment pressure. High containment pressure is not present in this event.

Table 15.1.5.1-2 contains a matrix which describes the extent to which normally operating plant systems are assumed to function during the transient. The operation of these systems is consistent with the guidelines of Subsection 15.0.2.3.

Table 15.1.5.1-3 contains a matrix which describes the extent to which safety systems are assumed to function during the transient.

DRAFT

DRAFT

15.1.5.1.3 Analysis of Effects and Consequences

a) Mathematical Models

The NSSS response to a loss of main steam with loss of offsite power as a result of turbine trip was simulated using the CESEC computer program described in Subsection 15.0-4. The transient minimum DNBR values were calculated using the TORC code which used the CE-1 CHF correlation described in Subsection 15.0-4.

b) Input Parameters and Initial Conditions

From the range of values for each of the principal process variables given in Subsection 15.0-3, a set of initial conditions contained in Table 15.1.5.1-4 was chosen that produces the lowest minimum DNBR. Additional clarification of the assumptions and parameters listed in Table 15.1.5.1-4 follows.

Maximum initial core power, maximum initial core inlet temperature, mimimum initial core mass flowrate and initial RCS pressure are chosen to minimize the DNBR, and maximize offsite doses.

The moderator temperature coefficient and break size were varied to delay the occurrence of reactor trip either on low steam generator pressure or high core power level, thus maximizing the core heat flux. An intermediate break size corresponding to 1.8 ft^2 effective steam flow area per steam generator with a moderator coefficient of -1.6×10^{-4} $\Delta P/F$ results in the lowest value of minimum DNBR and maximum degradation of fuel performance.

In order to further maximize the degradation in fuel performance and, thus, to maximize offsite doses, the time of turbine trip and the loss of offsite power, which caused four reactor coolant pumps to coastdown, is chosen so that the low reactor coolant flow trip condition occurs coincident with the low steam generator pressure reactor trip.

In this event, the turbine is assumed to trip prior to reactor trip due to depressurization of Main Steam System. The reactor trip on low hdyraulic oil pressure is expected to occur during this event. In this analysis it is conservatively assumed that this trip does not occur prior to reactor trip on low reactor coolant flow or low steam generator pressure.

The Pressurizer Pressure Control System and the Pressurizer Level Control System are assumed to be in the manual mode of operation and, therefore, do not function to mitigate depressurization of the Reactor Coolant System (RCS). This results in low RCS pressure which mimimizes the DNBR.

The highest one pin radial peak with the most top peaked axial power shape is chosen to minimize the DNBR during the transient.

DRAFT

DRAFT

c) Results

The dynamic behavior of important NSSS parameters following this event are presented on Figures 15.1.5.1-2 to 15. Table 15.1.5.1-1 summarizes some of the important results of this event and the times at which minimum and maximum parameter values discussed below occur.

A break in the main steam line outside containment causes an increase in steam flow, resulting in depressurization of the steam generators as shown on Figure 15.1.5.1-10. The pressure decrease initiates a low steam generator pressure trip and, subsequently, generates a main steam isolation signal (MSIS). MSIS closes the main steam isolation valves and main feedwater isolation valves isolating the intact steam generator while the steam generator connected to the ruptured line continues to blow down through the break.

The decreasing secondary pressure and temperature leads to an increase in primary to secondary heat transfer rate which causes the primary coolant (core average) temperature to decrease. Prior to reactivity due to a negative moderator temperature coefficient, the decreasing core average temperature causes moderator reactivity to increas, resulting in an increase of core power. After reactor trip, the core power further decreases to decay power level as shown on Figure 15.1.5.1-2.

The increasing core heat flux and the decreasing reactor coolant flow rate result in a decreasing minimum DNBR as shown on Figure 15.1.5.1-9. The reactor trip causes the core heat flux to decrease resulting in a subsequent increase in minimum DNBR. The minimum DNBR experienced during a loss of main steam with a loss of offsite power as a result of turbine trip is 0.88/ resulting in 3.1 percent of the fuel pins in DNB.

During this event, two sources of radioactivity contribute to the offsite dose, the initial activity in the steam generator inventory, which is assumed to be 0.1 μCi/cc dose equivalent I-131, and the activity which is added to the steam generator during the transient due to assumed Technical Specification primary to secondary leakage through the steam generator tubes of 1 gallon/minute.

During the cooldown, steam releases from the intact steam generator via the MSSVs and ADVs contribute to the offsite dose.

The offsite dose due to the loss of main steam-large, outside containment with loss of offsite power and with technical specification primary to secondary leakage through the steam generator tubes results in no more than a 64 rem two hour inhalation thyroid dose at the exclusion area boundary. The total offsite doses during this event are shown in Table 15.1.5.1-5.

DRAFT

DRAFT

15.1.5.1.4 Conclusions

This evaluation shows that the plant response to the loss of main steam-large, outside containment with loss of offsite power as a result of turbine trip and with technical specification primary to secondary leakage through the steam generator tubes results in maximum offsite doses which are within the acceptance guideline in Table 15.0-4.

DRAFT

DRAFT

TABLE 15.1.5.1-1

SEQUENCE OF EVENTS, CORRESPONDING TIMES AND SUMMARY OF RESULTS FOR A LARGE LOSS OF MAIN STEAM EVENT, OUTSIDE CONTAINMENT UPSTREAM OF MSIV WITH A LOSS OF OFF-SITE POWER AFTER TURBINE TRIP

Time (Sec)	Event	Analysis Set Point or Value	Success Paths							
			Reactivity Control	Reactor Heat Removal	Secondary System Integrity	Primary System Integrity	Maintenance of AC Power	Containment Integrity	Plant Habit Habitability	Radioactive Effluent Control
0.0	1.8 ft^2 break in a 34 inch main steam line	--								
47	Turbine trip assumed				X					
	- Off-site power lost	--								
	- Diesel generator starting signal	--					X			
	- Four RCPs coastdown	--								
47	Maximum reactor power, %	134								
48.1	Reactor trip signal generated on low RCS flow, % of rated flow or low steam generator pressure, psia	93 590	X							
50.9	Minimum DNBR	0.88								
66.4	MSIS generated on low SG pressure, psia	460	X		X					
68.0	SIAS generated on low pressurizer pressure, psia	1578	X	X		X	X	X	X	X
69	Pressurizer empties	--								
130	HPSI flow begins	--								
311	Affected steam generator empties	--								
650	Operator actuates auxiliary feedwater to intact SG	--			X					

DRAFT

DRAFT

SEQUENCE OF EVENTS, CORRESPONDING TIMES AND SUMMARY OF RESULTS FOR A LARGE LOSS OF MAIN STEAM EVENT, OUTSIDE CONTAINMENT UPSTREAM OF MSIV WITH A LOSS OF OFF-SITE POWER AFTER TURBINE TRIP

Time (Sec)	Event	Analysis Set Point or Value	Success Paths: Reactivity Control	Reactor Heat Removal	Secondary System Integrity	Primary System Integrity	Maintenance of AC Power	Containment Integrity	Plant Habit Habitability	Radioactive Effluent Control
1800	1. Operator actuates atmospheric dump valves to commence cooldown of RCS	--			X					
	2. Operator loads the following on safety buses charging pumps pressurizer heaters									
	3. Operator borates to cold shutdown concentration	--	X							
	4. Operator clears SIAS and reestablishes letdown	--				X				
7200	Off-site Power restored	--								
12,240+	Shutdown cooling initiated, °F/psia	350/275		X						

DRAFT

DRAFT

SL2-FSAR

TABLE 15.1.5.1-2

DISPOSITION OF NORMALLY OPERATING SYSTEMS

FOR THE LOSS OF MAIN STEAM-LARGE, OUTSIDE CONTAINMENT UPSTREAM OF MSIV WITH THE LOSS OF OFFSITE POWER AFTER TURBINE TRIP

SYSTEM	NORMAL AUTOMATIC MODE THROUGH-OUT TRANSIENT	MANUAL MODE THROUGH-OUT TRANSIENT	INOPERATIVE ON LOSS OF A.C. NORMAL AUTOMATIC MODE	MANUAL MODE WITHIN SYSTEM FAILURE ASSUMED	ASSOCIATED NOTES
1. Main Feedwater System			X		
2. Turbine-Generator Control System	X				
3. Steam Bypass Control System				X	
4. Pressurizer Pressure Control System				X	3
5. Pressurizer Level Control System				X	
6. Control Element Drive Mechanism Control System	X				
7. Reactor Regulating System				X	
8. Reactor Coolant Pumps				X	1
9. Chemical and Volume Control System				X	3
10. Condenser Evacuation System				X	
11. Turbine Gland Sealing System				X	
12. Component Cooling Water System	X			X	2,4
13. Turbine Cooling Water System		X			
14. Intake Cooling Water System	X				2,4
15. Condensate Transfer System			X		
16. Circulating Water System				X	
17. Spent Fuel Pool Cooling System				X	3
18. AC Power (Non-Safety)			X		
19. AC Power (Safety)	X				2
20. D. C. Power		X			1
21. Power Operated Relief Valves		X			
22. Instrument Air System			X		3
23. Waste Management-Liquid				X	

NOTES:
1. System has no automatic mode.
2. Lose power on loss of offsite power, then automatically loaded on diesel generator.
3. Operator must connect to safety bus for operation.
4. Only essential portions of the system are available.

DRAFT

DRAFT

TABLE 15.1.5.1-3

UTILIZATION OF SAFETY SYSTEMS FOR THE LOSS OF MAIN STEAM-LARGE, OUTSIDE CONTAINMENT UPSTREAM MSIV LOSS OF OFF-SITE POWER AFTER TURBINE TRIP

	ACTUATED AND REQUIRED	ACTUATED BUT NOT REQUIRED	SAFETY GRADE BACKUP TO NONSAFETY GRADE SYSTEM	FAILURE ASSUMED WITHIN SYSTEM (SEE NOTES)	ASSOCIATED NOTES
1. Reactor Protection System	X				
2. Engineered Safety Features Actuation Systems	X				2
3. Diesel Generators and Support Systems	X				
4. Reactor Trip Switch Gear	X				
5. Main Steam Safety Valves					
6. Pressurizer Safety Valves					
7. Main Steam Isolation Valves	X				
8. Main Feedwater Isolation Valves	X				
9. Auxiliary Feedwater System	X				
10. Safety Injection System	X				
11. Shutdown Cooling System (CCW & ICW)	*X				
12. Atmospheric Dump Valve System	*X				
13. Containment Isolation System					
14. Containment Spray System					
15. Iodine Removal System					
16. Containment Combustible Gas Control System					
17. Containment Cooling System	X				1

NOTES:

* Manually actuated during normal cool down

1. Normally operating system (in nonsafety mode)
2. Permissive blocks of SIAS and MSIS are manually actuated to permit shutdown depressurization.

Systems not checked are not utilized during this event.

DRAFT

DRAFT

TABLE 15.1.5.1-4

ASSUMED INPUT PARAMETERS AND INITIAL CONDITIONS FOR LOSS OF MAIN STEAM, LARGE, OUTSIDE CONTAINMENT UPSTREAM OF MSIV WITH LOSS OF OFFSITE POWER AS A RESULT OF TURBINE TRIP

Parameter	Assumed Value
Initial Power Level, MWt	2621.4
Initial Core Inlet Coolant Temperature, F	551
Initial Core RCS Flow Rate, gpm	370,000
Initial RCS Pressure, psia	2,150
Initial Pressurizer Water Volume, % Level	53
Axial Shape Index	-0.3
Doppler Coefficient Multiplier	1.0
Moderator Temperature Coefficient, $10^{-4}\Delta\rho/F$	
CEA Worth for Trip, $10^{-2}\Delta\rho$	
Break Size, ft^2	"

DRAFT

DRAFT

TABLE 15.1.5.1-5

OFFSITE DOSES

	Two Hour Exclusion Area Boundary Dose	Entire Event Low Population Zone Dose
Thyroid	64 rem	
Whole Body		

DRAFT

DRAFT

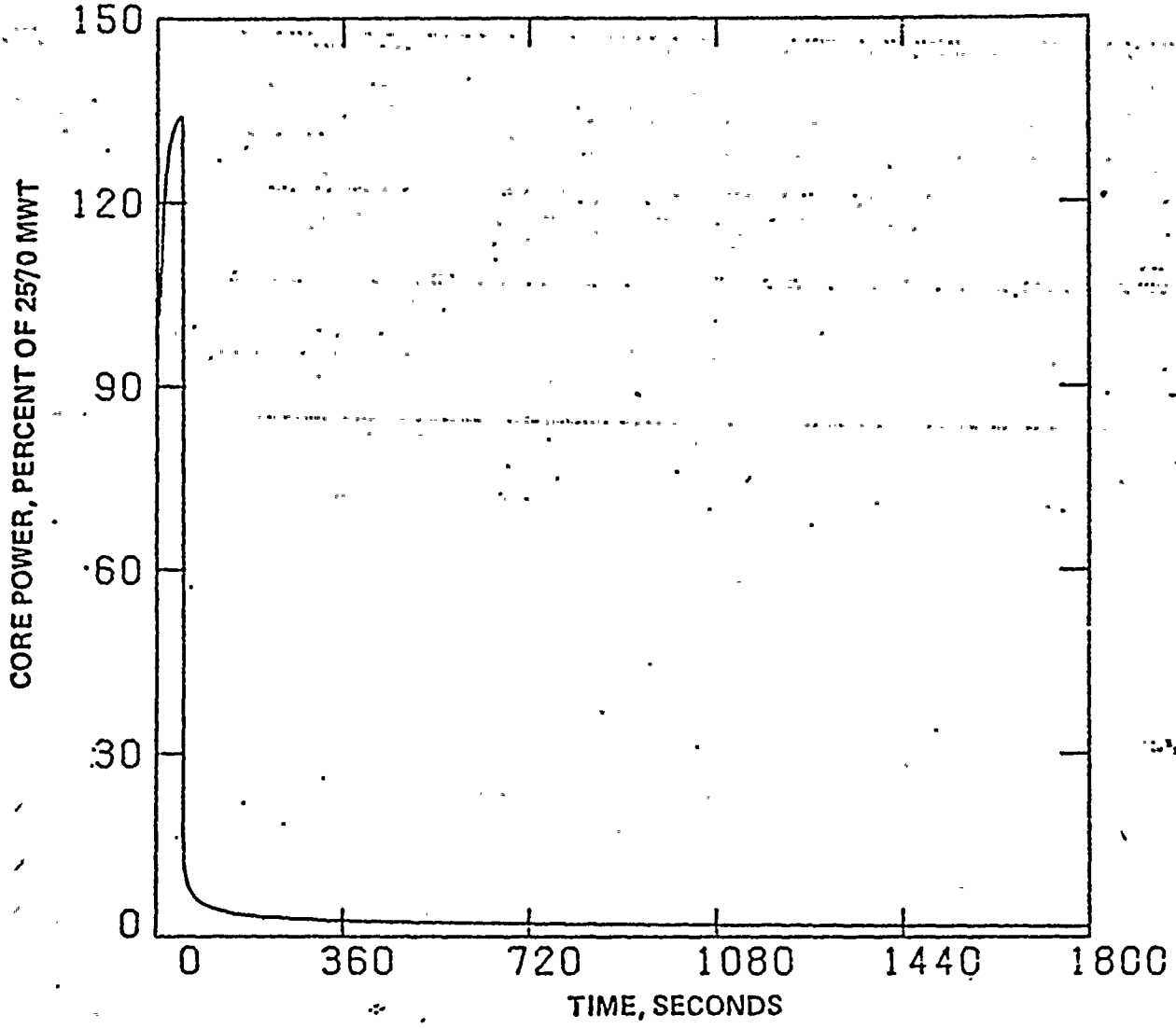

DRAFT

FLORIDA POWER & LIGHT COMPANY
ST. LUCIE PLANT UNIT 2

CORE POWER VS TIME

FIGURE 15.1.5.I-2

DRAFT

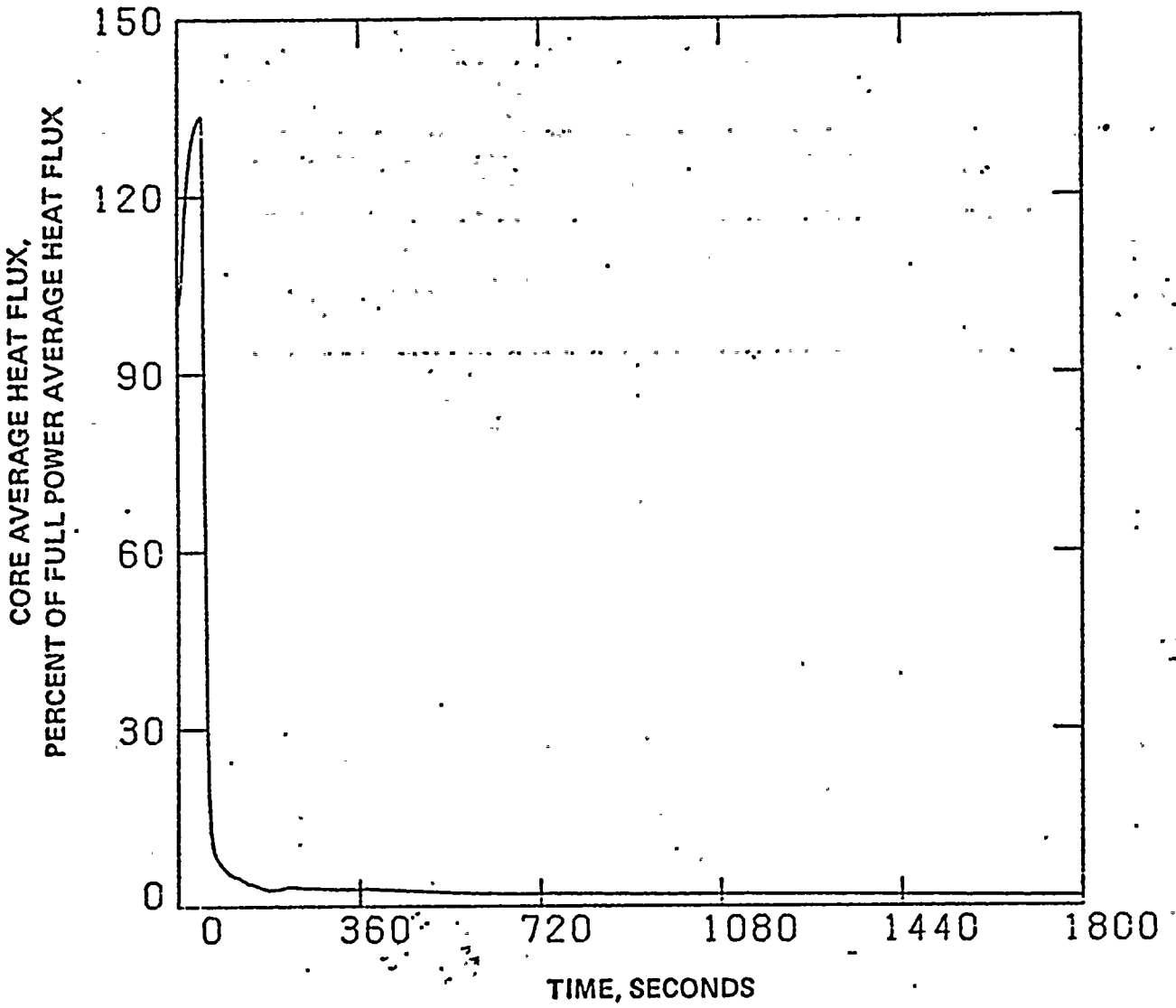

DRAFT

FLORIDA POWER & LIGHT COMPANY
ST. LUCIE PLANT UNIT 2

CORE AVERAGE HEAT FLUX
VS TIME

FIGURE 15.1.5.i-3

DRAFT

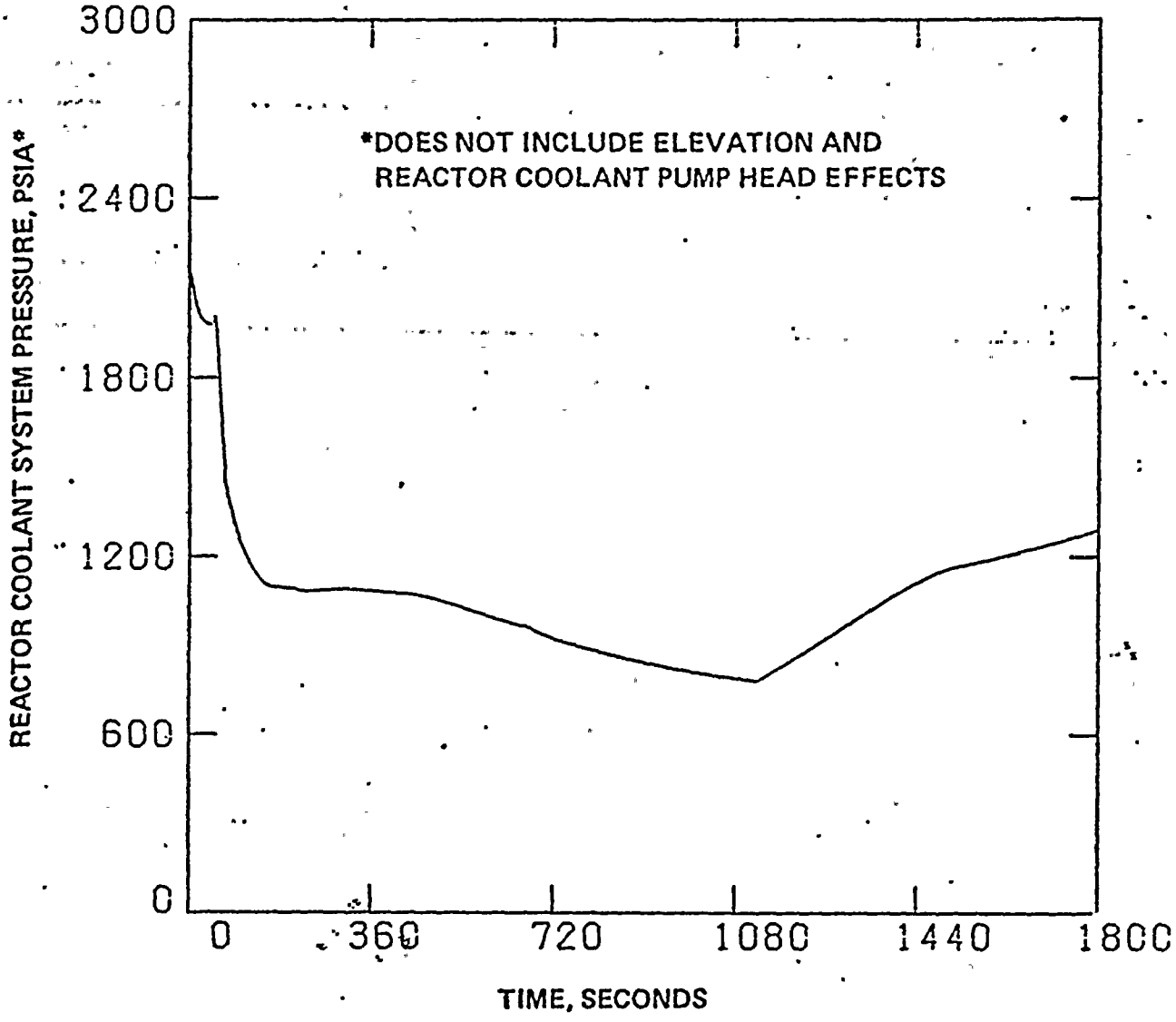

DRAFT

FLORIDA POWER & LIGHT COMPANY ST. LUCIE PLANT UNIT 2
REACTOR COOLANT SYSTEM PRESSURE VS TIME
FIGURE 15.1.5.1-4

DRAFT

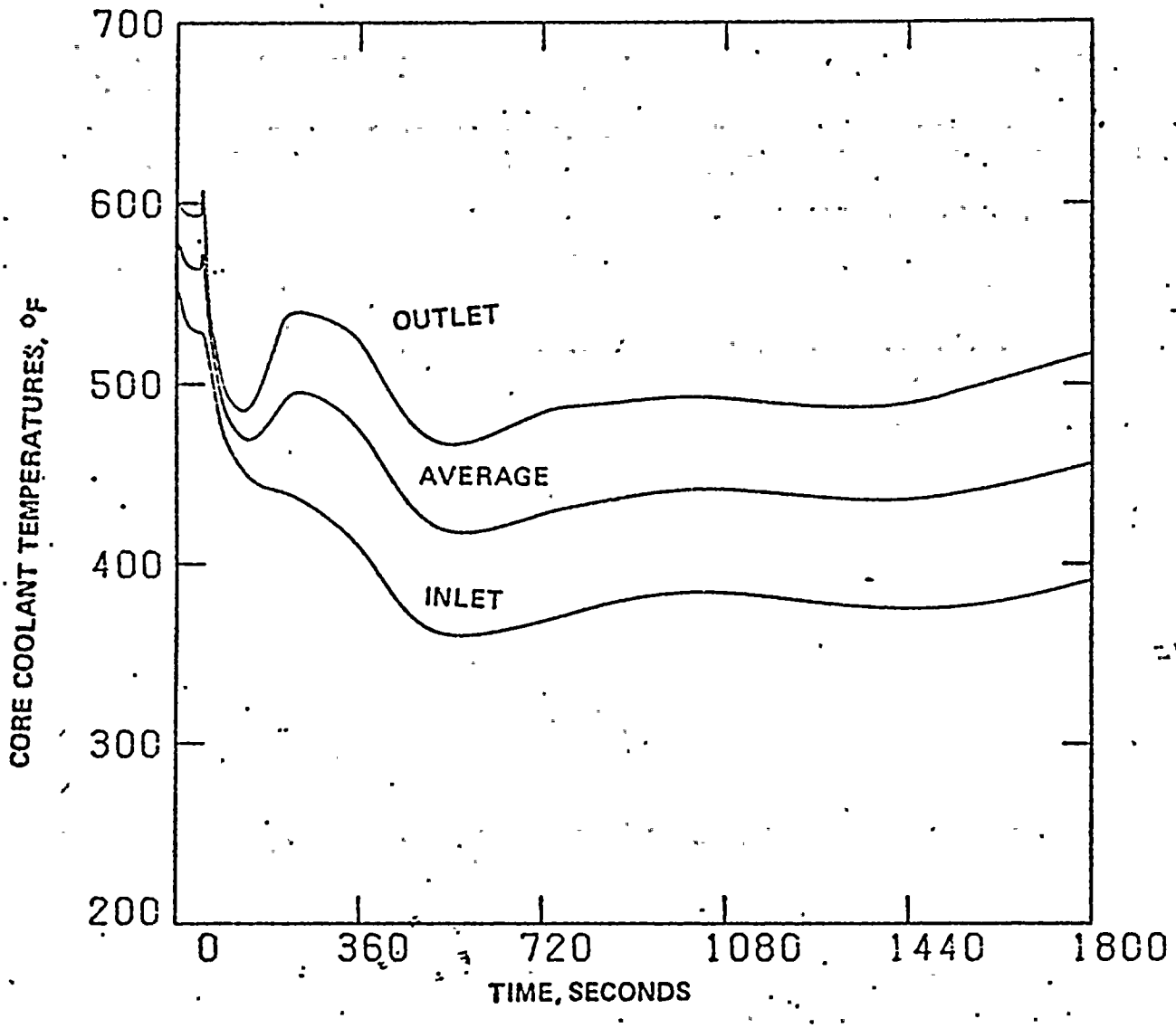

DRAFT

FLORIDA POWER & LIGHT COMPANY
ST. LUCIE PLANT UNIT 2

CORE COOLANT TEMPS. VS. TIME
FIGURE 15.1.5.1-5

DRAFT

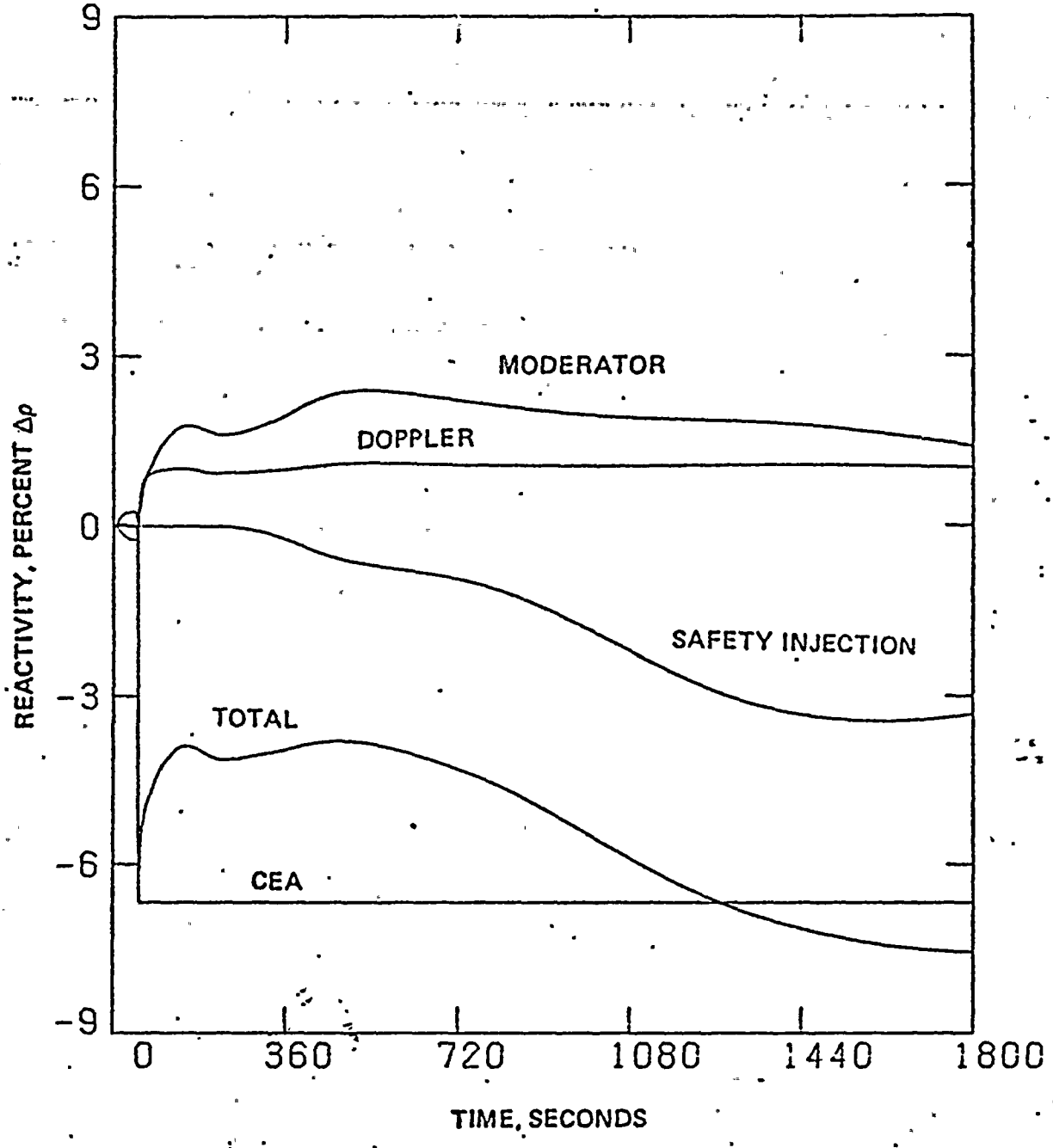

DRAFT

FLORIDA POWER & LIGHT COMPANY
ST. LUCIE PLANT UNIT 2

REACTIVITY VS TIME

FIGURE 15.1.5.I-6

DRAFT

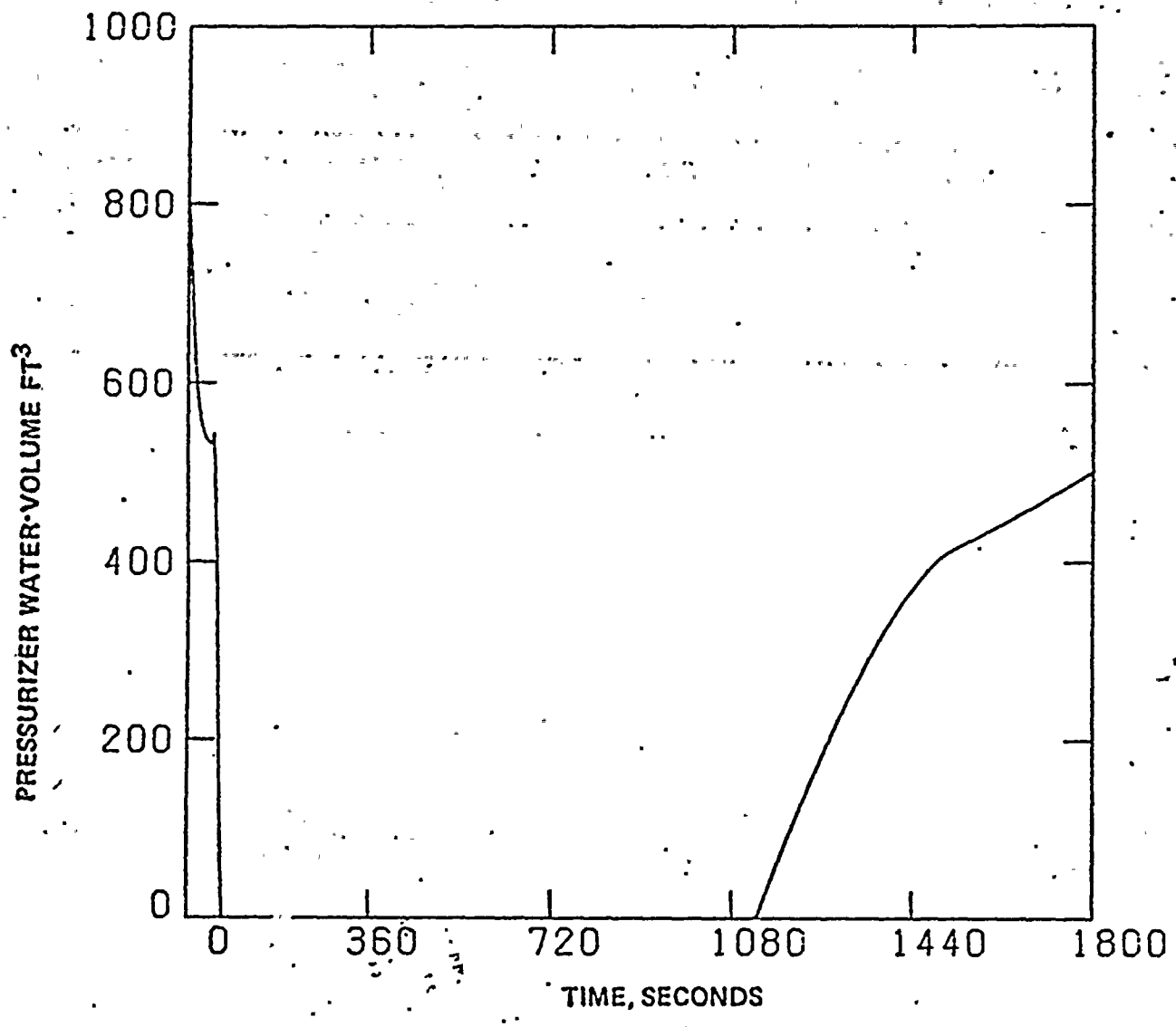

DRAFT

FLORIDA POWER & LIGHT COMPANY
ST. LUCIE PLANT UNIT 2

PRESSURIZER WATER VOLUME VS. TIME
FIGURE 15.1.5.1-7

DRAFT

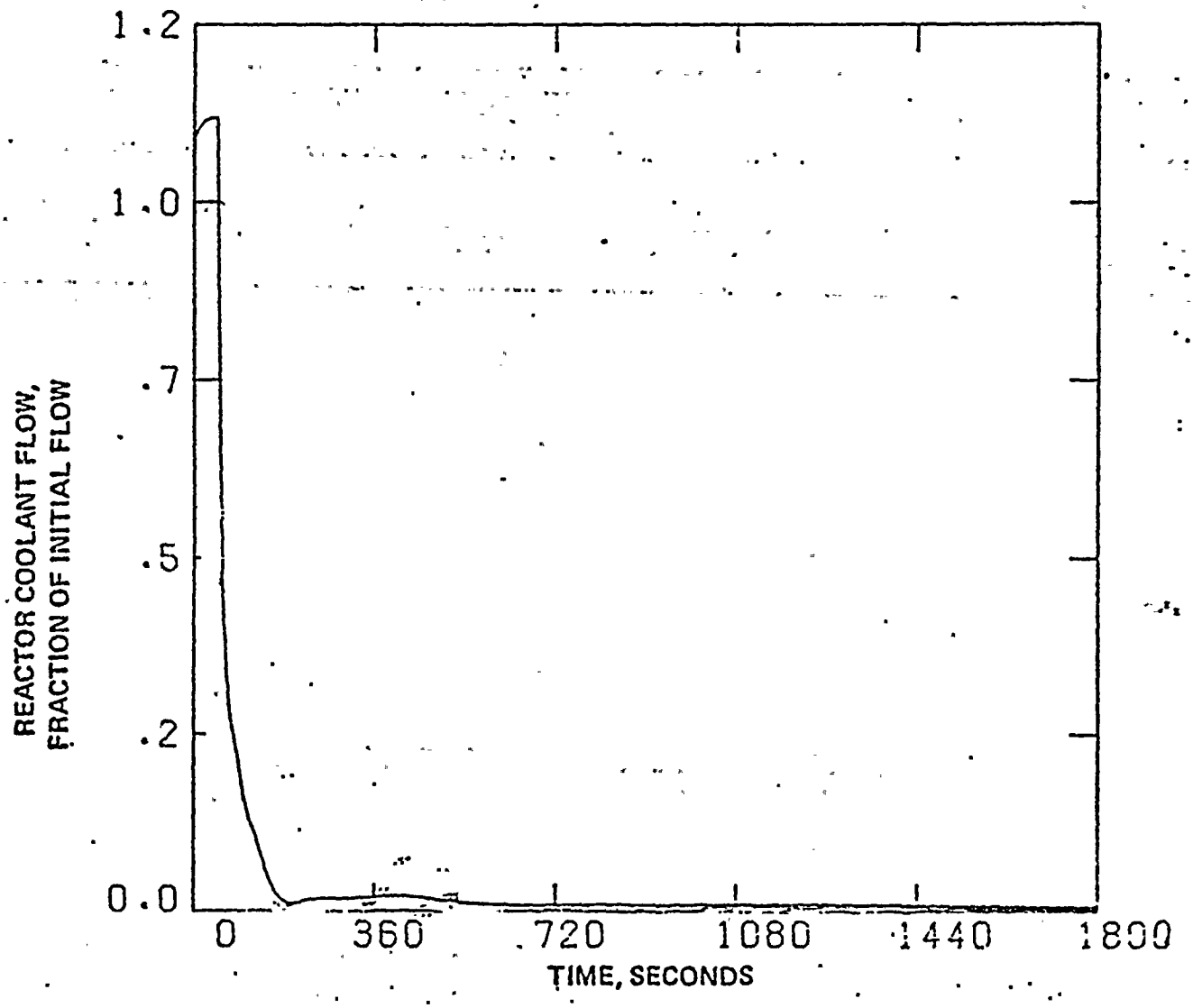

DRAFT

FLORIDA POWER & LIGHT COMPANY
ST. LUCIE PLANT UNIT 2

REACTOR COOLANT FLOW VS TIME

DRAFT

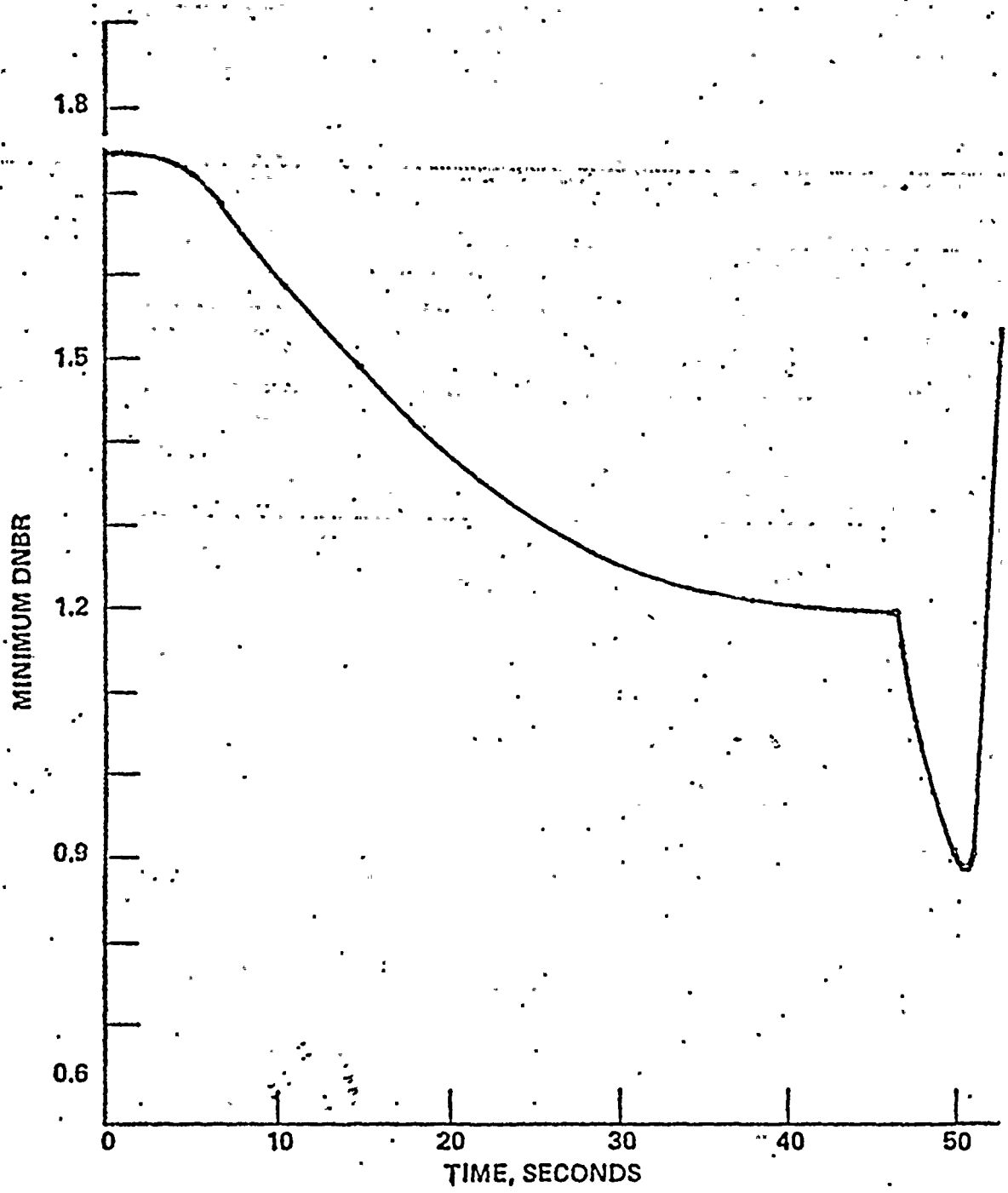

FLORIDA POWER & LIGHT COMPANY
ST. LUCIE PLANT UNIT 2

MINIMUM DNBR VS TIME

FIGURE 15.1.5.i-9

DRAFT

DRAFT

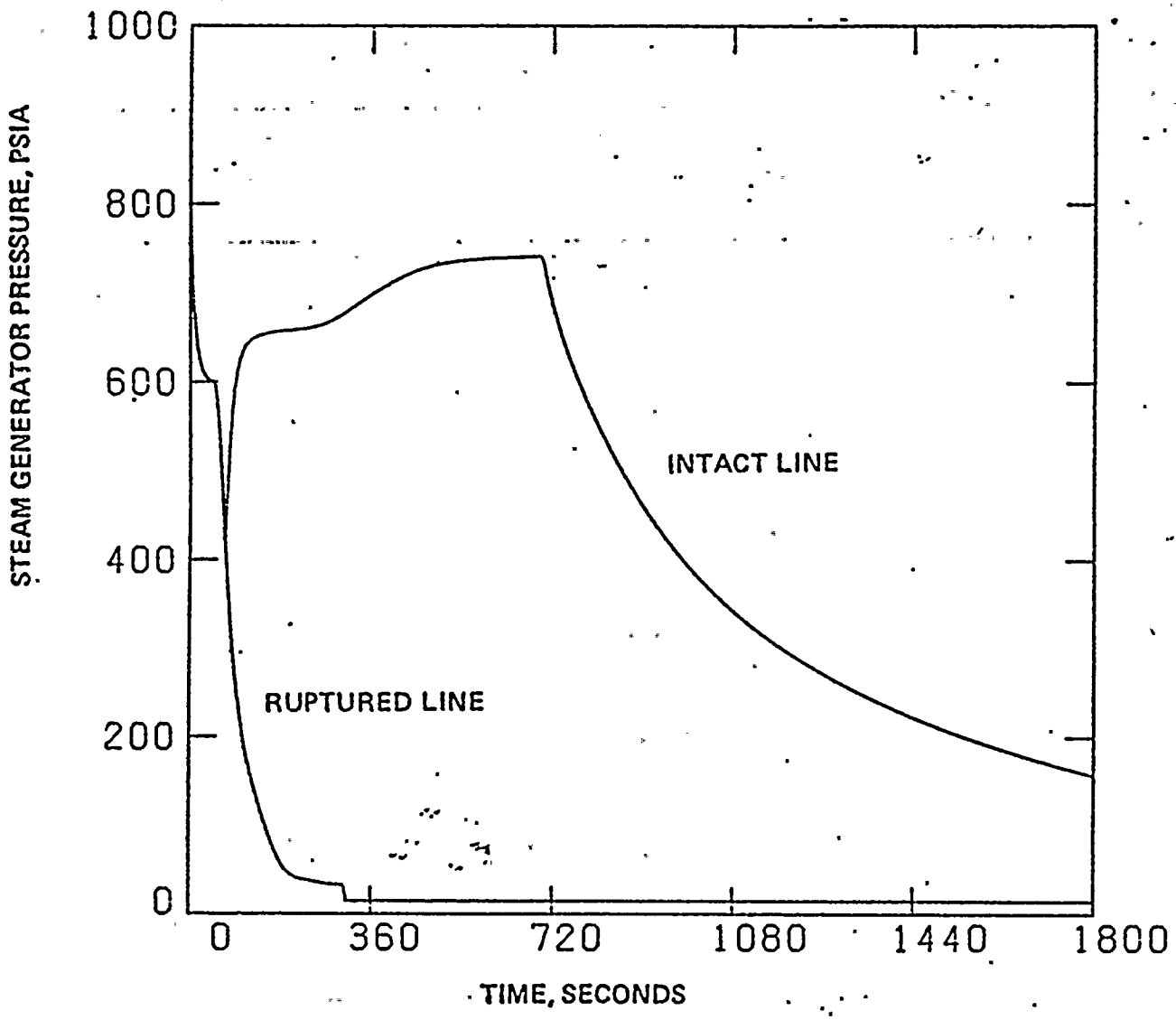

DRAFT

FLORIDA POWER & LIGHT COMPANY
ST. LUCIE PLANT UNIT 2

STEAM GENERATOR PRESSURE VS TIME

FIGURE 15.1.5.I-10

DRAFT

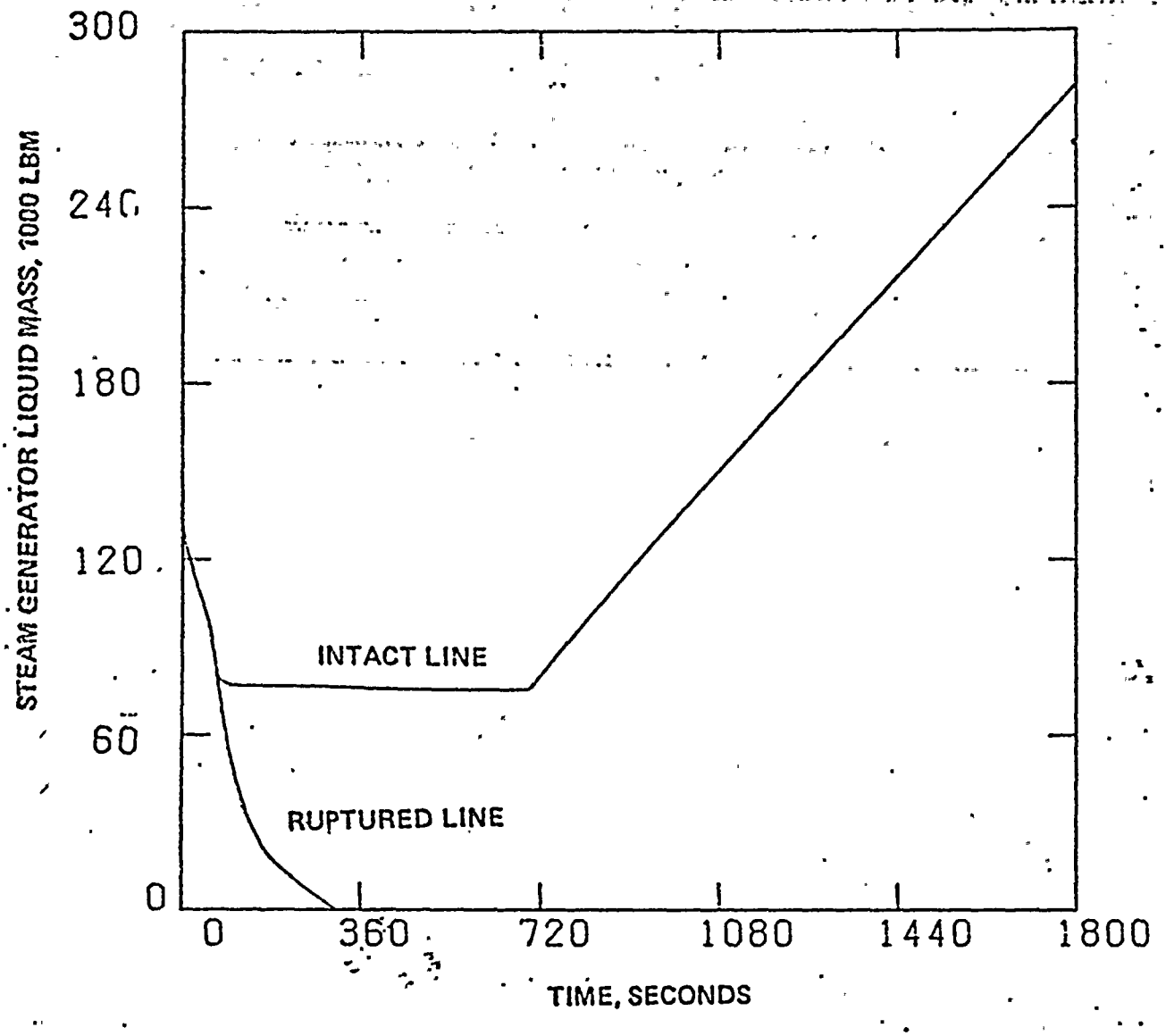

DRAFT

FLORIDA POWER & LIGHT COMPANY
ST. LUCIE PLANT UNIT 2

STEAM GENERATOR LIQUID MASS VS TIME

FIGURE 15.1.5.1-11

DRAFT

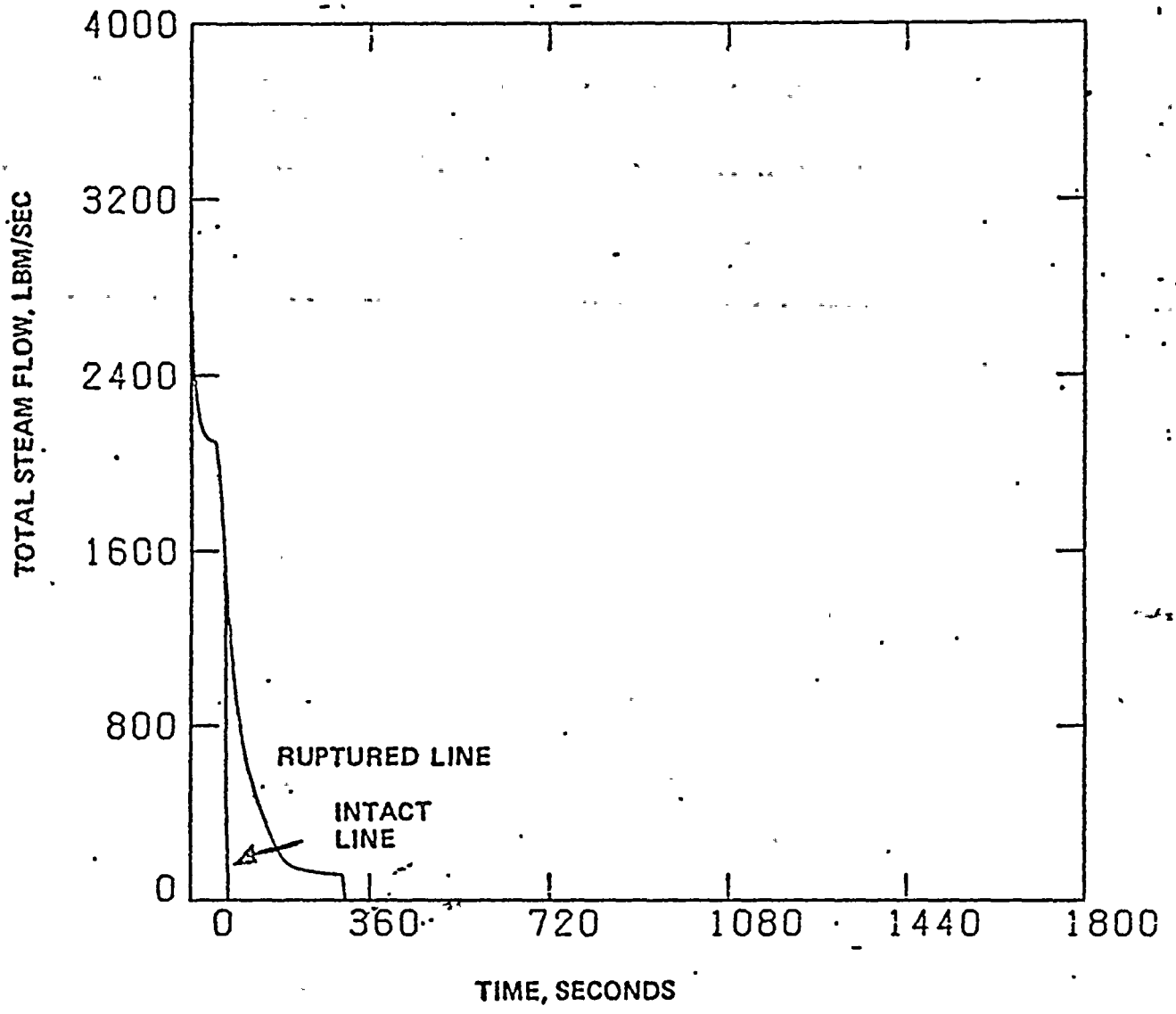

DRAFT

FLORIDA POWER & LIGHT COMPANY
ST. LUCIE PLANT UNIT 2

TOTAL STEAM FLOW VS TIME

FIGURE 15.1.5.1-12

DRAFT

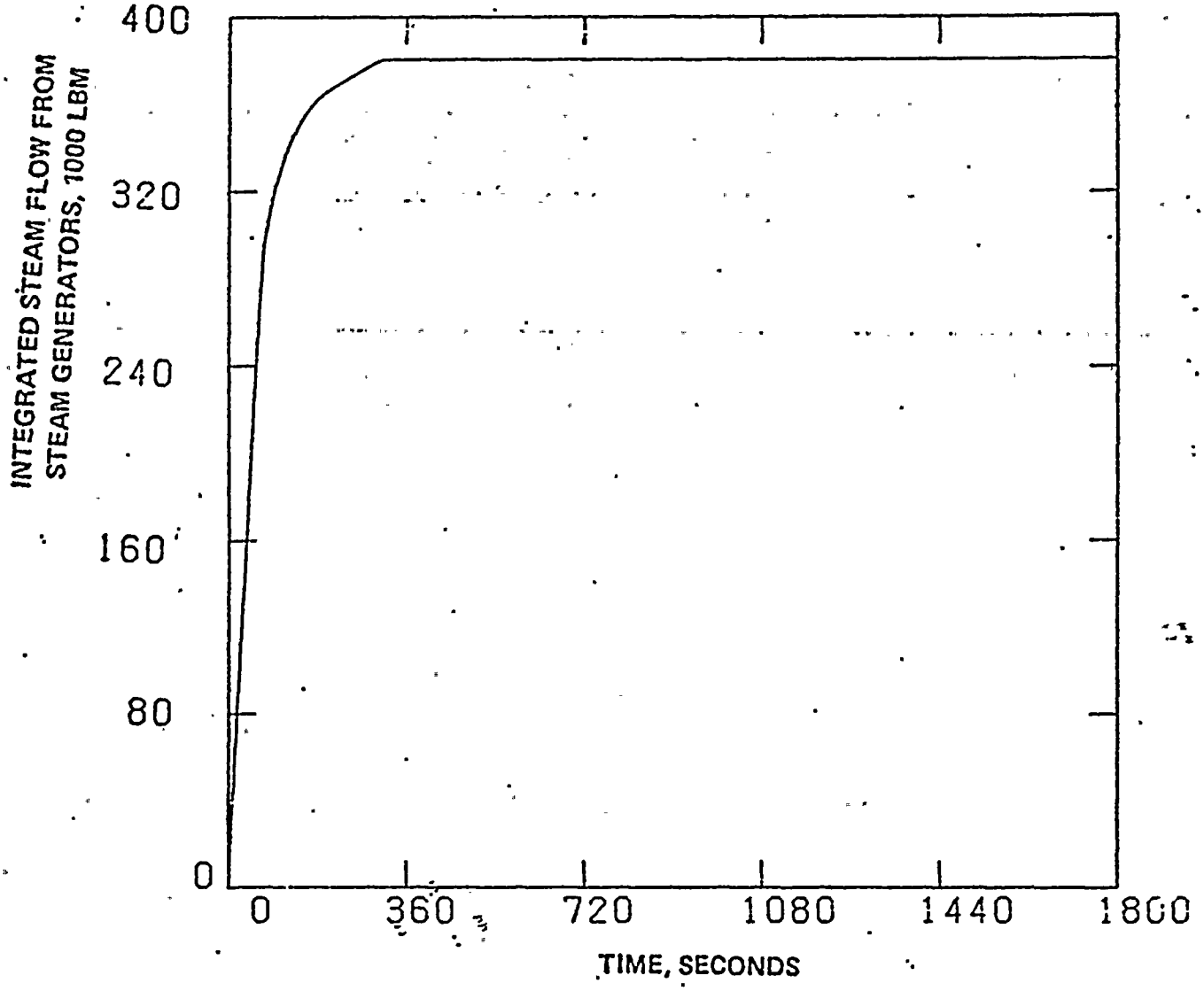

DRAFT

FLORIDA POWER & LIGHT COMPANY
ST. LUCIE PLANT UNIT 2

INTEGRATED STEAM FLOW
VS TIME

FIGURE 15.1.5.1-13

DRAFT

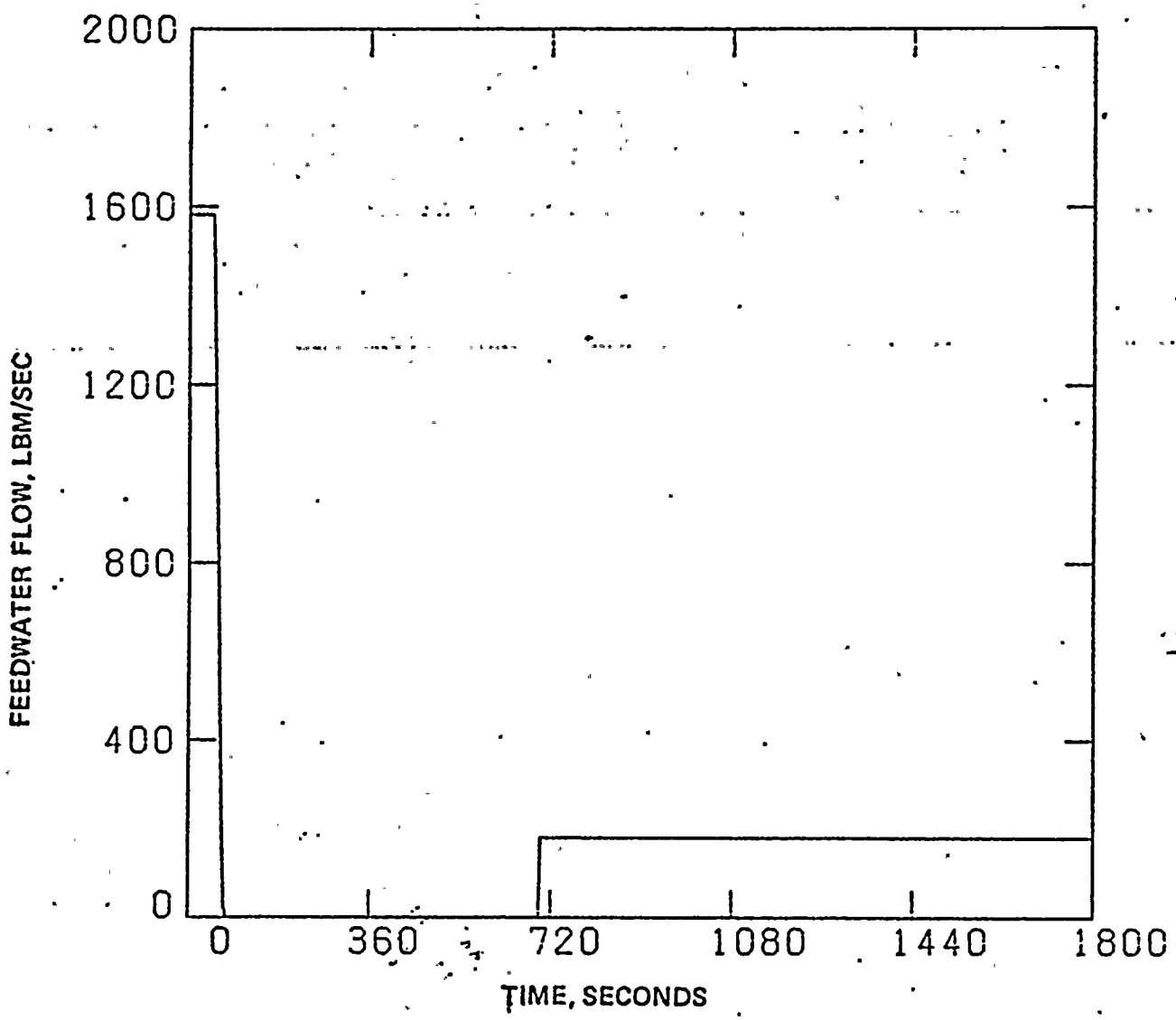

DRAFT

FLORIDA POWER & LIGHT COMPANY
ST. LUCIE PLANT UNIT 2

FEEDWATER FLOW VS TIME

FIGURE 15.1.5.1-14

DRAFT

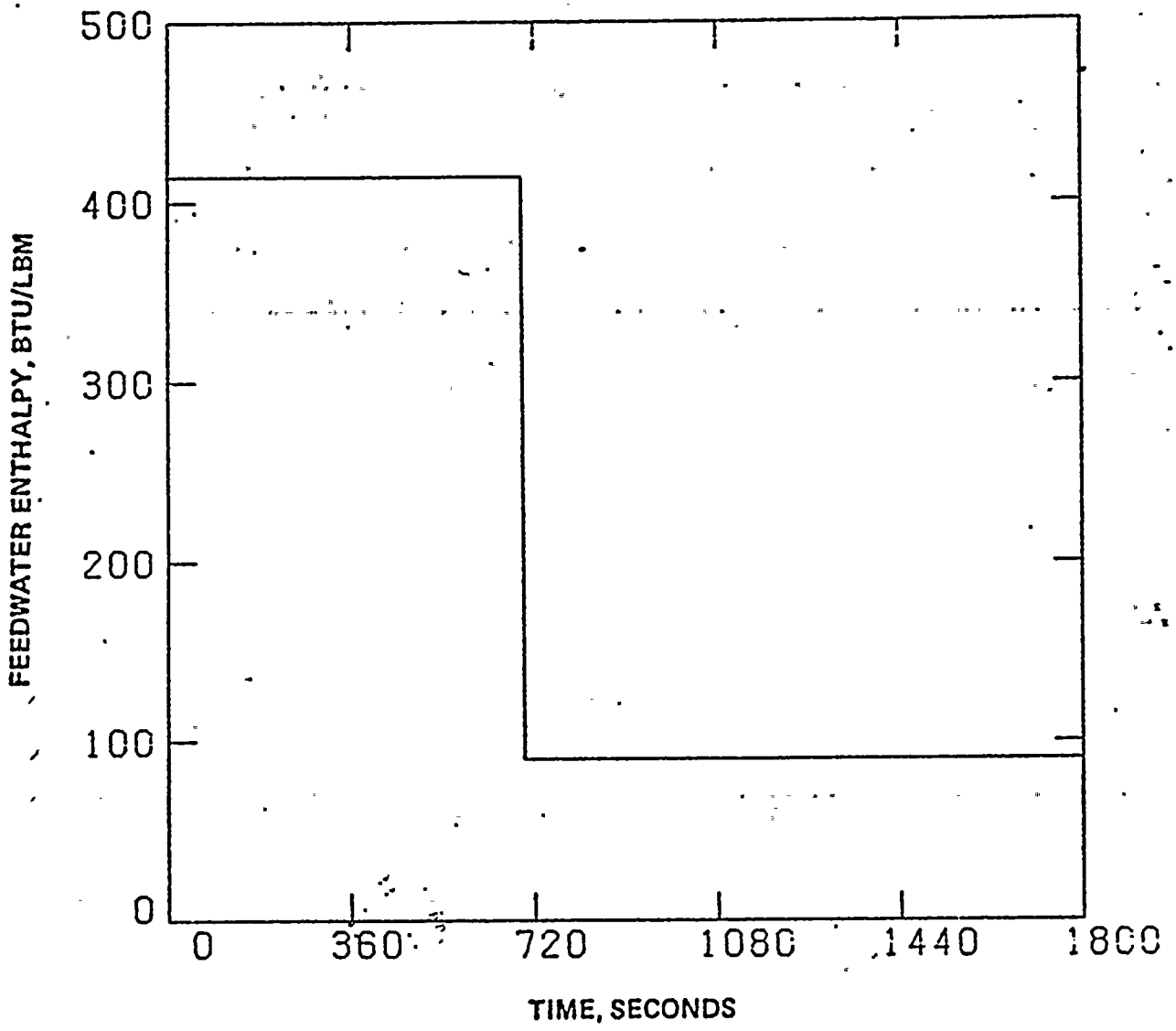

DRAFT

FLORIDA POWER & LIGHT COMPANY
ST. LUCIE PLANT UNIT 2

FEEDWATER ENTHALPY VS TIME

FIGURE 15.1.5.I-15

M. RUBIN REVISION TO FWLB ANALYSES IN RESPONSE TO INFORMAL REQUEST ON AFW FLOW REQUIREMENTS.

SL2-FSAR

between core heat addition and steam generator heat removal prior to the CEA insertion and, hence, to maximize the peak RCS pressure. The affected steam generator is assumed to instantaneously lose all heat transfer capacity when total depletion of its liquid inventory by boil-off and discharge occurs. The break area, which resulted in the highest peak RCS pressure, was found to be 0.25 ft^2.

Using the highest initial core power maximizes the RCS heat-up which is the driving force of the pressurization. Variations of initial core inlet temperature and initial reactor coolant flow had negligible effects on the peak RCS pressure. The highest initial core inlet temperature and the lowest initial reactor coolant flow were used in the analysis. The Pressurizer Pressure Control System is placed in the automatic mode, such that it delays reactor trip, thus prolonging the RCS heat-up and increasing RCS pressurization. Using the smallest CEA worth and the least negative moderator temperature coefficient maximizes the heat flux overshoot after reactor trip, increasing the RCS heat-up.

The highest initial pressurizer liquid volume and manual operation of Pressurizer Level Control System were used to allow the maximum increase of pressurizer level, maximizing the transient effect of RCS pressure increase during heat-up. However, the selection of Pressurizer Level Control System operating mode and initial pressurizer liquid volume has only a small impact on the peak RCS pressure. Auxiliary feedwater was assumed to be activated by the plant operator within five minutes of the low steam generator level trip condition to prevent the pressurizer from filling solid. The assumed flow to the intact steam generator is 500 gpm.

(The peak RCS pressure occurs at 31.6 seconds. Analysis has shown that if only one motor-driven AFW pump automatically starts delivering 320 gpm to the intact steam generator at 146 seconds, the peak pressure will be unchanged and the pressurizer will be prevented from filling solid.)

To maximize RCS pressure, the SBCS is assumed to be in the manual mode.

In order to eliminate the impact of uncertainty in the water level of the affected steam generator, reactor trip on a low water level is not assumed to occur until dryout of the affected steam generator.

It is anticipated that equipment may be actuated by high containment pressure during this event. These actions are identified in the sequence of events, but are conservatively assumed not to occur in the quantitative analysis of the NSSS response to this event.

c) Results

The dynamic behavior of important NSSS parameters following loss of feedwater inventory with loss of offsite power as a result of turbine trip is presented in Figures 15.2.5.2-2 to 20. Table 15.2.5.2-1. summarizes some of the important results of this event and the times at which the minimum and maximum parameter values discussed below occur.

A rupture in the main feedwater line instantaneously terminates feedwater flow to both steam generators and causes liquid flow from the

Per Carier 143

Question No.

252.1 We have reviewed Subsection 10.2.3 of the Final Safety Analysis Report submitted by the applicant. Our evaluation cannot be completed without additional information from the applicant relating to the design, assembly and operating conditions of the low pressure turbine discs. Past experience with similar equipment in the United Kingdom and more recently with Westinghouse turbines in the United States has revealed a propensity for stress corrosion cracking in discs which was not predictable. In order for the staff to assess the potential for stress corrosion cracking in the applicant's plant, the following information will be required.

a) What lubricant was used in the hub area of the discs for assembly.

b) What are the similarities/differences between the discs in the St. Lucie Unit No. 2 turbines and those used by Westinghouse.

c) What are the operating temperatures in the bore area of the discs.

d) Which disc or discs are exposed to a moisture level during operation that approximates the level of moisture present in cases of cracking.

e) What are the calculated critical crack sizes and what is the method used to calculate that size.

f) What capability for volumetric inspection of the disc hub areas is available to St. Lucie Unit No. 2.

Response

a) The Lubricant used in the hub area of the discs for assembly is Molybdenum Disulfide or a Graphite Lubricant.

b) St. Lucie Unit No. 2 L.P. turbine discs are similar in design to other Westinghouse units. Discs are shrunk on and keyed by means of three keys to the shaft.

c) The operating temperatures and moisture level for the various discs in the bore area are as follows:

Disc #	Inlet Bore Metal Temp F (Note 1)	Exit Bore Metal Temp F (Note 2)	Inlet Steam Moisture %	Outlet Steam Moisture
1	438	324	0	1.8
2	280	263	1.8	6.2
3	228	209	6.2	8.5
4	191	181	8.5	9.8
5	186	188	9.8	11.9

Note (1) 2" from Inlet disc face
Note (2) Mid key location or disc outlet edge

D. See table above for moisture level of various discs during operation.

E. Critical crack size is calculated to be as follows:

L.P. No.	Disc No.	Critical Crack Size Bore (in inches)	Critical Crack Size in Keyway (in inches)
L.P. No. 1	Disc 1 Governor end	5.179	2.665
L.P. No. 1	Disc 2 Governor end	2.696	1.207
L.P. No. 1	Disc 3 Governor end	4.243	2.116
L.P. No. 1	Disc 4 Governor end	4.961	2.537
L.P. No. 1	Disc 5 Governor end	3.973	1.957
L.P. No. 1	Disc 1 Gen. end	2.573	1.135
L.P. No. 1	Disc 2 Gen. end	2.220	0.928
L.P. No. 1	Disc 3 Gen. end	3.534	1.699
L.P. No. 1	Disc 4 Gen. end	7.179	3.839
L.P. No. 1	Disc 5 Gen. end	8.204	4.440
L.P. No. 2	Disc 1 Governor end	2.709	1.215
L.P. No. 2	Disc 2 Governor end	2.196	0.914

L.P. No.	Disc No.	Critical Crack Size bore (in inches)	Critical Crack Size in Keyway (in inches)
L.P. No. 2	Disc 3 Governor end	3.697	1.795
L.P. No. 2	Disc 4 Governor end	6.483	3.430
L.P. No. 2	Disc 5 Governor end	7.813	4.211
L.P. No. 2	Disc 1 Gen. end	2.660	1.186
L.P. No. 2	Disc 2 Gen. end	2.231	0.934
L.P. No. 2	Disc 3 Gen. end	3.648	1.766
L.P. No. 2	Disc 4 Gen. end	4.749	2.412
L.P. No. 2	Disc 5 Gen. end	8.237	4.460

The method of calculation is defined in Westinghouse Report "Criteria for L.P. Nuclear Turbine Disc Inspection" submitted to NRC in June, 1981. Discs 1 and 2 approximates the level of moisture present in cases of cracking.

F. The Bores and Keyways can be inspected by ultrasonic inspection techniques without removing the disc from the shaft. St. Lucie Unit No. 2 has been subjected to this inspection at the site.

Question No.

420.05 (7.1) The instrumentation and control system comparison information of FSAR Table 1.3-1 and FSAR Subsection 7.1.1.6 is insufficient. The information supplied does not completely show that each instrumentation, control and supporting system is:

1. Identical to that of a nuclear power plant of similar design which has recently received an operating license, or

2. Different from previous/recent designs with a discussion of the differences and their effects on safety related systems.

The above information is required by Regulatory Guide 1.70. Revision 3, "Standard format and content of safety reports for nuclear power plants", Section 7.1.1. Therefore, in conformance with Regulatory Guide 1.70, Section 7.1.1, provides a comparative discussion for each St. Lucie 2 instrumentation and control system.

Response

Chapter 7 will be revised to include the following information:

St. Lucie 2 instrumentation and control systems are designed and built functionally identical to those systems provided for St. Lucie 1 (Docket No. 50-353). In addition section 7.1.1.6 will be amended as follows. Also see table 420.05-1 for detailed comparisons of the Reactor Protection System.

i) Shield Building Ventilation System Switchover from Fuel Handling Building (E) (see Subsection 6.2.3)

The above are described further in Section 7.6.

7.1.1.6 Comparison

The Reactor Protective System was designed and built functionally identical to the system provided for St Lucie Unit 1 (Docket No. 50-335) with the following exceptions:

a) The number of CEAs is changed to 91. The corresponding change in the number of CEAs and CEA subgroups has resulted in minor changes in CEA and core protection calculator software. [redacted]

b) RPS

- St. Lucie Unit 2 has a loss of CCW trip for RCP (Equipment) protection. This trip is neither presently nor previously licensed, and is not credited in the safety analysis.
- Overall the Nuclear Instrumentation portion of the RPS is functionally identical to the St. Lucie Unit 1. However, the sub-function, Zero Power Mode Bypass (ZPMB) is initiated by the low power section of the Linear Power Range Safety Channel rather than the Wide Range Log Channels, as in St. Lucie Unit 1. The St. Lucie Unit 2 Wide Range Log Channel will have an accuracy of ± 3% of full scale voltage (corresponding to a factor of two in absolute power level); with a response time of 50 msec. The St. Lucie Unit 2 design specifies initiation of ZPMB by the low power circuitry of the Power Range Safety Channel. Here, a smaller linear range is utilized to provide improved setpoint accuracy and better response time. In particular, the low power circuitry has an accuracy of ± 0.1% of full scale power over its range of 10^2 to 2% power; with a response time of less than 25 msec.

  The method of ZPMB initiation employed in St. Lucie Unit 2 is superior to that used in St. Lucie Unit 1 since the setpoint accuracy and the response time have been improved by a least a factor of two.

- The St. Lucie Unit 2 Logic functions are identical to that used for St. Lucie Unit 1, but also includes fuses in all matrix inter-bay connections as part of improved fault protection. In addition, a test circuit is provided for checking the fuses associated with this matrix fault protection periodically.(2) Matrix fuse integrity will be checked periodically in accordance with the RPS technical specifications.

  - St. Lucie Unit 2 matrix relays are dry reed types, for improved reliability over the original St. Lucie Unit 1 mercury wetted reed type relay design.
  - St. Lucie Unit 2 incorporates a new RPS bistable design which, while functionally identical, is characterized by: greater accuracy, input buffering for improved circuit isolation, improved noise immunity via an adjustable response time, less cycling due to a variable hysterisis feature, and a pull-up (down) circuit design which forces a bistable trip on a loss of input signal. Consequently, contrary to the St. Lucie Unit 1 FSAR Section 7.2.2.2, the St. Lucie Unit 2 auctioneered Input bistables utilizing negative inputs <u>will</u> trip in an open circuit configuration.(3)
  - St. Lucie Unit 2 has incorporated RG1.53.RG1.22, RG1.75, IEEE-323-74 -344-75 and -384-74 in the RPS design, as these standards were not in effect when St. Lucie Unit 1 was licensed.

c) <u>Systems Required for Safe Shutdown</u>

- [redacted] St. Lucie Unit 2 conforms to RG 1.75, which identifies a 6-inch spatial separation requirement, versus the 12 inch criteria of St. Lucie Unit 1.

d) <u>Safety Related Display Instrumentation</u>

- The upper and lower CEA limits are indicated on the CEDMCS panel for St. Lucie Unit 2, while St. Lucie Unit 1 displays this information on the core mimic display. The St. Lucie Unit 2 design is identical to the SONGS design (Docket No. 50-362).
- Many aspects of the St. Lucie Unit 2 design for Post Accident Monitoring are different from St. Lucie Unit 1. St. Lucie Unit 2 is identical to SONGS with the exception of invoking BTP EICSB No. 23, Qualification of Safety Related Display Instrumentation for Post Accident and Safe Shutdown. The associated changes in this area for invoking RG1.97, Rev 02 are provided as part of response to ICSB question 420.41.
- St. Lucie Unit 2 utilizes the Analog Display System (ADS), which while functionally identical to the St. Lucie Unit 1 Metroscope, exhibits improved reliability design features and incorporates improved human factors characteristics.

  This section is not 1E indication and is further described in Section 7.7.1.1.6.

e) Engineered Safety Features Actuation System (ESFAS)

The St. Lucie Unit 2 ESFAS is functionally identical to the St. Lucie Unit 1 System. Channel designation and parameter inputs are essentially the same except for the following specific differences. The St. Lucie Unit 2 main steam isolation signal (MSIS) is initiated by a low pressure signal from either steam generater or high containment pressure (FSAR section 7.3.1.1.5). St. Lucie Unit 1 MSIS is initiated by a low pressure signal from either steam generator only. The St. Lucie Unit 2 containment isolation actuation signal (CIAS) will be modified to actuate on safety injection actuation signal (SIAS) as well as high containment pressure or high containment radiation. The modification was incorporated in St. Lucie Unit 1 as required by USNRC TMI Action Items to satisfy a diversity requirement for containment isolation. FSAR section 7.3.1.1.4 will be revised to reflect this CIAS modification.

St. Lucie Unit 2 has incorporated R.G. 1.53, 1.22, 1.75, IEEE 323-1974, 344-1975, and 384-1974 in the ESFAS design, as these standards were not in effect when St. Lucie Unit 1 was licensed.

NOTES

1. This design reflects that of the C-E System 80 design, (Docket No. STN-50-470F), which is qualified to IEEE 323/74 and 344/75.
2. The fuses of this section are utilized in the System 80 Plant Protection System Design.
3. The bistable design is a modified System 80 design, since the System 80 design does not utilized auctioneering.

The ESF systems was designed and built functionally identical to the ESF systems used on St Lucie Unit 1 (Docket No. 50-335). The following are ESF system differences when compared against St Lucie Unit 1.

a) Containment fan cooling system has two speed motors.

b) HPSI and LPSI pumps are provided with redundant mini flow (recirculation) headers.

c) LPSI pumps have redundant headers and associated valves.

d) The HPSI pumps are comprised of two functionally separate and independent pumps and headers.

e) The Shutdown Cooling System is designed with redundant valves and headers.

f) Piping and valves permit the diversion of HPSI flow from the cold leg into the hot leg of the Reactor Coolant System.

7.1.2 IDENTIFICATION OF SAFETY CRITERIA

Comparison of the design with applicable Regulatory Guide recommendations and degrees of compliance with the appropriate design bases, criteria standards, and other documents used in the design of the systems listed in Subsection 7.1.1 are described in Subsections 7.1.2.1 through 7.1.2.2.

7.1.2.1 Design Bases

The technical design bases for specific instrumentation and controls of each safety related system are presented in applicable subsections of this chapter. Design bases that apply equally to all safety related instrumentation and control systems are in this subsection.

Table 420.05-1

St. Lucie I and II RPS Comparison

FSAR Section	St. Lucie I & II Comparison (Standards, Functional & Hardware) & St. Lucie II New Additions	Comment	Other Licensing Applications
7.1	General functional differences are identified for the RPS and ESF in Section 7.1.1.6. Except for those identified, St. Lucie II is functionally identical to St. Lucie I. Some safety criteria differences are not apparent because of the St. Lucie I and II FSAR format differences. However, St. Lucie II is explicit in identifying by comparison the Regulatory Guides versus the St. Lucie II I&C design basis.	See Section 7.1.1.6	Reg Guides and Standards are similar to Songs

St. Lucie I and II RPS Comparison

FSAR Section	St. Lucie I & II Comparison (Standards, Functional & Hardware) & St. Lucie II New Additions	Comment	Other Licensing Applications
7.2 7.2.1.1.1.4	St. Lucie II does not incorporate Asymetric Steam Generator Tilt (ASGT) as part of the TM/LP PVAR calculation	St. Lucie II is not a "stretch" power plant therefore ASGT is not a design requirement	Not required for 2560 HWT operation.
7.2.1.1.1.6	St. Lucie II has provisions for 3 & 4 RCP operation. The low RCS flow trip setpoint is switched from the 3 pump to the 4 pump setting automatically when reactor power is >60%	Same as St. Lucie I	Presently installed in St. Lucie I
7.2.1.1.1.11 also 7.2.2.2.10	Loss of CCW trip is added to St. Lucie II for RCP (equipment) protection	Desired by FP&L II	Not previously or presently licensed. Not credited in the Safety Analysis.
7.2.1.1.2.1	Comments included in Tables 7.2-3 and 7.2-4	-	-
7.2.1.1.2.2	Overall the Nuclear Instr. System performs functionally identical to St. Lucie I. Certain sub-functions are performed differently in St. Lucie II. These are as follows:		
	(1) The Zero Power Mode Bypass is initiated by the low power section of the linear Power Range Safety Channel	This eliminates the need to qualify the Wide Range Log Power Safety Channel.	Not previously licensed. Reflects System 80 design and qualification
7.2	The Excore Safety Channels are qualified to IEEE 323-74 and IEEE 344-75	New qualification standards	Per System 80 Design

FSAR Section	St. Lucie I & II Comparison (Standards, Functional & Hardware) & St. Lucie II New Additions	Comment	Other Licensing Applications
7.2.1.1.3	1. St. Lucie II Logic functions identical to St. Lucie I. St. Lucie II however has fuses in all matrix inter bay connections.	For fault protection via inter cabinet wiring	Same design as System 80-PPS. Not previously licensed.
	2. St. Lucie II Matrix relays are dry reed types. St. Lucie I are mercury-wetted types.	High failure rate of mercury-wetted types in older plants prompted replacement with dry reed.	Dry reed relays have been supplied to Maine Yankee, Omaha, Millstone II, and possibly St. Lucie I for replacements.
7.2.1.1.4	The reactor trip switch gear no longer houses the under-voltage relays for auxiliary functions.	While functionally identical, the relays are now housed in the CEDMCS cabinet	The RTSG is identical to Songs. In addition, IEEE 384 has been incorporated for St. Lucie II.
7.2.1.1.9.9	St. Lucie II has additional test circuitry for checking the fuses of the matrix fault protection fuses.	Verify continuity of all fuses periodically. St. Lucie I does not have fuses to test.	Not licensed on any other plant nor in System 80 design. Test circuit only. Open fuse is conservative.
7.2.1.1.9.2	Trip test cable selects (plugs into) measurement channel. The B/S auctioneer select switch is used to select the auctioneered channel to auctioneering input bistables only.	This section is identical to St. Lucie I.	This was explained to clarify the St. Lucie II design as worded in the FSAR.

FSAR Section	St. Lucie I & II Comparison (Standards, Functional & Hardware) & St. Lucie II New Additions	Comment	Other Licensing Applications
7.2 Cont'd OTHER	St. Lucie II incorporates a new bistable design which has: (1) greater accuracy (2) circuit isolation via input buffers (3) adjustable time response for noise immunity (4) Variable hysteresis to prevent cycling (5) Pull-up (down) circuitry which forces a bistable trip on a loss of input signal, i.e. open circuitry. These units are directly interchangeable with the old design and are functionally identical	St. Lucie II has a different manufacturer for these bistables. Thus the benefits of 1-4. (5) St. Lucie I FSAR indicates that auctioneered input bistables utilizing negative inputs will not trip in an open circuit configuration (St. Lucie I FSAR 7.2.2.2)	Not licensed previously. This is a modified System 80 design, incorporating auctioneering, since System 80 does not utilize auctioneering.
7.2.1.2	R.G. 1.53, Single Failure Crit. R.G. 1.22, Periodic testing IEEE 323, 344	These documents were not in effect for St. Lucie I.when licensed.	
7.2.2.3.2	IEEE 279/71, 384/74, and RG 1.75/75R1 statements of conformance of design	IEEE 384 and RG 1.75 were not in effect when St. Lucie I was licensed. IEEE 279/71 was in effect but conformance is more explicit in the St. Lucie II FSAR	

St. Lucie I and II RPS Comparison

FSAR Section	St. Lucie I & II Comparison (Standards, Functional & Hardware) & St. Lucie II New Additions	Comment	Other Licensing Applications
Table 7.2-3	Components are identified for RCP and CEDMCS CCW	FP&L design addition	Not credited in the Safety Analysis. Equipment protection only.
Table 7.2-4	(1) St. Lucie II does not list channel accuracy and response times.		This is the same format Songs' FSAR has.
	(2) RCP and CEDMCS CCW channel is added here	FP&L design addition.	Not credited in Safety Analysis. Equipment Protection only.
	(3) Listed parameter ranges are slightly different than St. Lucie I's. Axial shape index is omitted.	Later design, closer to System 80.	System 80

St. Lucie I and II RPS Comparison

FSAR Section	St. Lucie I & II Comparison (Standards, Functional & Hardware) & St. Lucie II New Additions	Comment	Other Licensing Applications
7.4.2.2	St. Lucie II identifies a 6 inch spatial separation between redundant circuitry while St. Lucie I identifies a 12 inch separation.	St. Lucie II conforms to RG 1.75, which identifies the 6 inch separation requirement.	System 80
7.4.2.1.2	St. Lucie II refers to RG 1.75 (in FSAR Section 8.3) for single failure criteria associated with 1E channels during a loss of offsite power	This criteria is slightly different from St. Lucie I criteria since RG 1.75 was not in effect when St. Lucie I was licensed.	

FSAR Section	St. Lucie I & II Comparison (Standards, Functional & Hardware) & St. Lucie II New Additions	Comment	Other Licensing Applications
7.5 7.5.1.4c	St. Lucie II upper and lower CEA limits (reed switch) are functionally identical to St. Lucie I. Indications of these limits are located on the St. Lucie II CEDMCS control panel versus the Core Mimic as in St. Lucie I.	The SONGS design is implemented for St. Lucie II.	Songs
7.5.1.8 and 7.5.2.9	Post Accident Monitoring for St. Lucie II is different in many aspects when compared to St. Lucie I	St. Lucie II is identical to Songs with exception of invoking Branch Technical Position EICSB No. 23, Qualification of Safety Related Display Inst. for Post Accident and Safe Shutdown.	Songs = However, RG 1.97 will be invoked in these areas for St. Lucie II. The associated changes are forthcoming.
7.5.1.4	St. Lucie II incorporates the Analog Display System, which is functionally identical to the St. Lucie I Metrascope.	The Analog Display System has improved reliability design features as well as improved human factors characteristics.	Not a licensing requirement.

SEP 14 1981

St. Lucie I and II RPS Comparison

FSAR Section	St. Lucie I & II Comparison (Standards, Functional & Hardware) & St. Lucie II New Additions	Comment	Other Licensing Applications
7.7.1.1.1	CEDMCS is functionally identical except as noted in Section 7.7.1.2.1.	St. Lucie II is a 16 by 16 core with 91 CEA's. The differences identified in 7.7.1.2.1 were implemented to incorporate Human Factors Engineering.	Songs
7.7.1.1.8	The Incore Instrumentation System is similar to that supplied for ANO 2, except that 56 detectors are utilized on St. Lucie II versus 44 on ANO 2. (Section 7.7.1.2.8)	St. Lucie II is a 16 x 16 core.	ANO 2
7.7.1.1.9	St. Lucie II has 4 linear power range/log wide range safety channel drawers in the RPS. In addition they have 2 startup/control channels for non-safety operator functions for start up and steady state power operation and load following. The St. Lucie II source range (startup) channels use BF3 detectors instead of the B10 used on St. Lucie I.	See 7.7.1.2.9 of St. Lucie II FSAR	System 80 See also 7.7.1.2.9 of St. Lucie II FSAR.

Additional Information to Existing Response on SER 8.3 Open Item - 90% 480V Motors.

The load sequencing (timing) relays used on St. Lucie Unit 2 are the same as those used on St. Lucie Unit 1. Limited set point drift experienced with St. Lucie Unit 1 timing relays has resulted in an ongoing evaluation of solid state electronic timing relays having greatly improved repeat accuracy as replacements for the existing relays. Experience on St. Lucie Unit 1 has shown that set point drift does not exceed ±1 second in 18 months and that this drift has never impacted the starting and loading of the diesel generators. The preclude any possibility of load sequencing relays will be verified operable with the interval between each load block within ±1 second if its design interval every 6 months. Upon satisfactory completion of the electronic relay evaluation, the existing relays will be replaced during the first refueling outage. Replacement of the existing relays with low drift electronic relays shall be cause to return the surveillence requirement to once every 18 months during plant shut down.

Chapter 8.3 SER Item - Isolation Devices

The St. Lucie Unit 2 design will be modified such that those non-safety loads connected to the Class 1E busses which are not considered extremely important for operation and plant investment will be shed from the Class 1E busses by a Safety Injection Signal or will be locked out of service during plant operation in accordance with the Technical Specifications.

Those non-safety loads which are considered extremely important for operation and plant investment will remain connnected to the Class 1E busses, however, they will be provided with two, Class 1E, Fault current interrupting devices.

MAP SERIES NO. 71

UNITED STATES DEPARTMENT OF THE INTERIOR
GEOLOGICAL SURVEY

FLORIDA DEPARTMENT OF NATURAL RESOURCES
published by BUREAU OF GEOLOGY

TERRACES AND SHORELINES OF FLORIDA

By
Henry G. Healy

Prepared by
UNITED STATES GEOLOGICAL SURVEY
in cooperation with
BUREAU OF WATER RESOURCES MANAGEMENT
FLORIDA DEPARTMENT OF ENVIRONMENTAL REGULATION
and
BUREAU OF GEOLOGY
FLORIDA DEPARTMENT OF NATURAL RESOURCES

Tallahassee, 1975

INTRODUCTION

This report presents a map showing the extent and distribution of shoreline features in Florida and adjacent areas. The preparation and completion of the results of the work from an onshore and offshore in the literature and a careful examination and evaluation of all data on which they are based.

The topography of Florida is the result of different erosional and depositional processes that have subjected the landscape through thousands of years. One of the most striking features in Florida as well as in other areas of the world are the terraces and other shoreline features or features associated with the advance and retreat of the sea during the Pleistocene Epoch or the "Great Ice Age." The changes in sea level during the Pleistocene Epoch caused the shore and continental glaciers have left their imprint with such physiographic features as terraces, wave-cut scarps or shorelines, beach dunes and offshore bars. The terraces and shorelines are the most conspicuous part of the relief, particularly along the Atlantic coast. In some parts of the State the results of erosional processes that occurred during and after the Pliocene Epoch are also conspicuous. Some of the features are remnants of these shoreline and marine features that may be unrecognizable.

Mineral deposits associated with terraces, shore, and near-shore features are of economic importance. Vernon (1942, p. 136) states that "Practically all the phosphate rock mined in Florida is from deposits 100 feet above sea level, one mile from river 100 feet, and possibly a third at approximately 215 feet above sea level. MacNeil (1950) states that the Pliocene and Pleistocene deposits are the source of most phosphorites in land pebble phosphate deposits of southern Florida. Although MacNeil (1950, p. 1016) found no relationship existed between the phosphate deposits and Pleistocene features, the marine deposits associated with some of the terraces deposited during the Pleistocene Epoch are important sources of heavy minerals and other economic materials. Terrace deposits contain material economic such as common clay used in manufacturing cement and building brick and tile, sand and gravel used in the construction industry, limestone for refractory products, and sand used in the manufacture of glass and by the construction industry. Heavy minerals produced from ancient shore and near-shore deposits include ilmenite, rutile, and zircon; titanium concentrates; and the scarcer but valuable minerals used in the manufacture of incandescent gas light mantles.

Terraces and shorelines are important in hydrologic regimen of ground water in many areas. The amount of the terrace relative to adjacent land and the way or manner of sediments underlying the terrace are factors that affect the recharge and movement of ground water. Terrace deposits also contribute to the preconsolidation surface of the shallow artesian aquifer system generally underlying the terrace. The terraces act as a large aquifer attached to a aquifer and role in determining the configuration of the potentiometric surface of the shallow artesian aquifer system. Parker and others (1955, p. 93) and in Escambia and Santa Rosa Counties (Musgrove and others, 1965, p. 15).

In those areas where well sorted permeable sands underlie the terrace, recharge from rainfall occurs by infiltration into the shallow sand aquifer, into the Floridan aquifer and the Biscayne Aquifer in southeastern Florida.

In Volusia County, the most productive recharge areas are the eastern part of the Talbot terrace and ridge. According to Knochenmus and Bush (1971, p. 13), a relatively good hydraulic connection exists between the elastic deposits and the Floridan aquifer under most of the Talbot terrace.

In northeast Palm Beach and northeast Broward Counties, on the lower Hillsboro Canal area (43 feet) are large to the Biscayne aquifer (Parker and others, 1955, p. 93) and the Talbot is estimated to be about 70 ft/d (McCoy and Hardy, 1970, p. 11).

Terraces are also important sources of water as shore-zonal areas in which large water-bearing aquifers in one unit for use (Wyrick, 1966, p. 23).

PREVIOUS INVESTIGATIONS

Numerous reports have been prepared on the terraces of Florida. MacNeil (1947, p. 255) was the first to recognize eleven terraces in Florida. He correlated the terraces with those of the Atlantic coastal plain to Chesapeake Bay and named the terraces from the oldest to the youngest Wicomico, Penholoway, Talbot, Pamlico, Silver Bluff, and the Recent. Cooke (1945) divided the terraces above sea level into two groups, the Wicomico, Penholoway, Talbot, and Pamlico terraces and the Silver Bluff terrace and a Recent deposit. Cooke (1945) also described the Wicomico terrace as a single