U. S. NUCLEAR REGULATORY COMMISSION
REGION I

Report No. 50-244/90-24

Docket No. 50-244

License No. DPR-18

Licensee: Rochester Gas & Electric Company
49 East Avenue
Rochester, New York 14649

Facility Name: R. E. Ginna Nuclear Power Plant

Inspection At: Ontario, New York

Inspection Conducted: October 15-19, 1990

Inspectors: J. Yerokun, Reactor Engineer, Special Test Programs Section, EB, DRS — 11/20/90 date

for C. Hsu, Mechanical Engineer, AEOD — 11/21/90 date

Approved by: P. K. Eapen, Chief, Special Test Program Section, Engineering Branch, DRS — 11/29/90 date

Inspection Summary: Announced Safety Issues Inspection of the licensee's implementation of NRC Bulletin 88-04

Areas Inspected: Licensee's actions to address the concerns identified in Bulletin 88-04. Inspection Guidance provided by NRC Temporary Instruction 2515/105.

Results: All Safety-Related Systems with two or more pumps were evaluated for the problems discussed in Bulletin 88-04. The licensee has taken adequate measures to address these issues and preclude the potential for safety-related pump damage from the issues addressed in Bulletin 88-04. No violations or deviations were identified. However, it was noted that the licensee's responses to the NRC did not adequately reflect the as-built system conditions. Upon identification of this concern by the inspector, the licensee agreed to provide an update to their response to Bulletin 88-04.

Table of Contents

		Page
1.0	Scope of the Inspection	3
2.0	Residual Heat Removal System	4
3.0	High Head Safety Injection System	6
4.0	Main Auxiliary Feedwater System	8
5.0	Standby Auxiliary Feedwater System	9
6.0	Overall Conclusion	10
7.0	Exit Meeting	11

Attachment A, RHR Pre and Post-Modification Configuration

Attachment B, SI Pre and Post-Modification Configuration

Attachment C, Main and Standby Auxiliary Feedwater Configuration

Attachment D, Persons Present At Exit Meeting

1.0 Scope of the Inspection

The purpose of this inspection was to verify that the licensee had taken adequate measures to address the issues discussed in NRC Bulletin No. 88-04, Potential Safety-Related Pump Loss. This inspection was also to ensure adequate licensee response to the bulletin and to verify satisfactory implementation of the actions specified in the licensee response.

Discussion

NRC Bulletin No. 88-04 primarily addressed the following minimum flow design concerns: (1) The potential for the dead-heading of one or more centrifugal pumps in safety-related systems that have a common minimum flow line; (2) the pump to pump interaction during minimum flow operation; and (3) the adequacy of the installed minimum flow capacity.

When two centrifugal pumps operate in parallel and one of the pumps is stronger than the other, (i.e., one pump has higher developed head for the same flow), the weaker pump may be dead-headed when the pumps are operating in the minimum flow mode. The potential for dead-heading is manifested at low flow rates because of the flatness of centrifugal pumps' characteristic curve in this range.

This inspection was conducted in accordance with NRC Inspection Manual (IM) Chapter 2515, Temporary Instruction (TI) 2515/105. This TI provides guidance for performing selective inspection of the licensee's implementation of NRC Bulletin 88-04.

Rochester Gas and Electric (RG&E) Corporation initially responded to the bulletin in a letter dated July 7, 1988. In this letter, RG&E provided the following information:

- The Safety Injection System, which has three pumps, is not susceptible to the concerns of the NRC bulletin.

- The RHR System, which has two pumps, is susceptible to the concerns of the bulletin.

- The Auxiliary Feedwater System (consisting of the main system with two motor driven and 1 turbine-driven pump and the standby system with two motor-driven pumps) is not susceptible to the concerns of the bulletin.

In their letter, RG&E also presented planned corrective actions and Justification for Continued Operation. A second letter, dated July 24, 1989, to the NRC provided the status of the planned modifications with a schedule for completion. In a subsequent letter, dated March 12, 1990, to the NRC, RG&E stated that all concerns of Bulletin 88-04 had been resolved and all the modifications were completed.

The inspectors reviewed drawings and the system descriptions of all safety-related systems with two or more pumps for the concerns discussed in the bulletin. The inspectors verified that the RHR, SI and Aux. Feedwater systems were the only ones susceptible to the issues discussed in the bulletin.

2.0 Residual Heat Removal System

The RHR system was inspected to ascertain the adequacy of the licensee's actions to preclude the possibility of dead heading the pumps during operation in the minimum flow mode. This inspection also verified the adequacy of the minimum flow line. The inspection included:

- Review of System Piping and Instrument Drawing (P&ID) No. 33013-1247 Rev. 13
- Review of Modification Package No. 4675
- Review of Licensee evaluations
- Review of system's pre and post-modification tests results
- Review of ASME XI test results
- Review of licensee/vendor correspondence
- system walkdown

Findings

Ginna's RHR system consists of two 100% capacity pumps each rated for 1560 gpm at 280 feet total head and 1770 rpm. The pumps discharge into parallel paths each with a check valve, heat exchanger, and control valve into 8-inch piping. The discharge lines merge into a common 10-inch line which discharges into the "B" reactor coolant system cold leg. See Attachment A for the minimum flow configuations before and after modifications.

The previous configuration using a 2-inch flow line provided either 200 gpm minimum recirculation flow for single pump operation or 100 gpm each when both pumps were running. The licensee found this configuration susceptible to pump dead heading and inadequate for minimum recirculation flow. Modification package No. 4675 was implemented to provide a 3-inch minimum flow line for each pump.

RG&E's initial review of periodic test data showed that there was a 2 psi difference between the two RHR pumps' developed pressure at the 200 gpm. A special test (PT-2.2 Rev. 39, RHR System) was performed on December 16, 1987 and again on December 22, 1987 to more accurately determine and establish operational limits during parallel operation. The results showed that when both pumps were operating in parallel, the "B" pump delivered 200 gpm and the "A" pump delivered only about 5 gpm flow. During the tests,

equipment safety was ensured by monitoring and recording such essential pump data as, bearing housing vibration, casing vibration, casing temperature, seal water piping temperature and motor current. The test results also confirmed that the "A" pump's total discharge pressure was only about 2 psi less than that of B, when operated separately at 200 gpm.

The licensee's interim corrective action was to require securing of one RHR pump when both pumps are running and the total indicated flow was less than 1200 gpm. The above additional requirement was deleted after the completion of the hardware modification discussed below.

The long term corrective action was implemented by modification package No. 4675 during the 1989 outage when the minimum flow recirculation system was redesigned. An independent 200 gpm recirculation line was installed for each pump. A sketch of the configuration is shown on Attachment A.

The licensee performed a post modification test to document the configuration and operation of the RHR system. Pre-operational test specification MET-030 Rev. 0 was written and approved on April 20, 1989, to define the technical requirements for the testing of the modified RHR pump recirculation system. This specification required the following to be verified:

- There is sufficient recirculation flow during one or both pumps operating.

- The modifications have not degraded the RHR system flow.

- Test Data are recorded and documented.

Test procedure No. SM-4675.4, Rev. 0, RHR Recirculation system functional test (1989 Phase), was written and approved on April 29, 1989 to control the testing of the RHR modification. In May 1989, this test was completed. Test results demonstrated that (1) each RHR minimum flow recirculation line provides a minimum flow of at least 200 gpm; (2) there was at least 200 gpm recirculation flow for each pump when both pumps were in the recirculation mode; and (3) there was no pump dead heading. Test No. SM-4675.9 Rev. 0, RHR system shutdown cooling full flow test, performed in May 1989 demonstrated that the modifications did not degrade the RHR system flow. Test report "SM-4675.4, SM-4675.9," EWR 4675, Rev. 0 was generated to document the licensee's review of these tests.

The inspectors reviewed the results of post-modification tests SM-4675.4 and SM-4675.9 and had no further questions in this regard. The inspectors performed a walkdown of the installed modification to the RHR system and verified that the modification was installed as designed. No unsafe conditions were identified. The inspectors verified that the minimum

flow lines are sized to provide adequate flow in accordance with the pump vendor's recommendations as described below:

- For approximately 30 minutes operating time .... 100 gpm
- For 100 hours/month .... 260 gpm
- For continuous operation (24 hours/day) .... 520 gpm

The inspectors discussed all expected minimum flow operating conditions with the licensee. During the ASME Section XI surveillance tests, the pumps are operated for approximately 15 to 20 minutes. In an accident situation, after a Safety Injection Signal, the RHR pumps will be secured within 30 minutes, if they are not required.

The inspectors ascertained that the licensee had performed adequate 10 CFR 50.59 safety evaluations for this modification. A report titled "Safety Evaluation 10 CFR 50.59, Ginna Station, RHR Pump Recirculation - 1989" documents this evaluation.

Conclusion

The inspectors concluded that the licensee has adequately responded to the concerns raised by NRC Bulletin 88-04. The licensee has adequately modified the RHR system and successfully demonstrated that the new recirculation lines preclude dead heading in the minimum flow recirculation mode with one or both pumps running. The recirculation lines are sized to provide adequate flows for the pumps. The established minimum flows are consistent with those recommended by the pump vendors.

3.0 High Head Safety Injection System

In a letter dated July 7, 1988, to the NRC, the licensee stated that each of the three high head safety injection (SI) pumps are provided with a separate minimum flow recirculation line. The licensee concluded that these pumps are not susceptible to the concerns described in the bulletin.

The inspectors reviewed the licensee's evaluation for the SI system. They also reviewed the modification to the SI system which the licensee had implemented to provide increased pumps recirculation capacity.

Findings

The Safety Injection System has three pumps each rated at 300 gpm at 2700 feet Total Discharge Head (TDH). The 3-inch discharge lines from the "A" and "B" pumps have train separation, and they feed the Reactor Coolant System (RCS) loop "B" and loop "A" cold legs, respectively. The "C" pump is a swing pump that ensures flow to both trains if one of the other pumps fails. With all three pumps operating, the "C" pump's flow is directed to both trains. Each SI pump was provided with a 3/4 inch minimum flow

recirculation line which discharge into a common 1 inch line. The common 1 inch line discharges to the Refueling Water Storage Tank (RWST). A sketch of the configuration is shown on Attachment B.

In 1988, the licensee performed a special test to determine the adequacy of the 30 gpm minimum flow for each pump. With a 3/4 inch common test line, the pumps were operated separately at 30, 53 and 100 gpm. No appreciable difference in the pump's vibration levels was observed. All vibrations were within an acceptable range and test results were included in the licensee's July 7, 1988 letter to the NRC. In spite of the above, the licensee modified the pumps' recirculation systems to provide increased recirculation flow. The basis for this modification was to reduce the potential for accelerated wear of the pump internals due to low flow operation.

Modification package No. 3881 was implemented in 1989 to provide a 1½-inch recirculation line for each pump in place of the former 3/4 inch lines. These individual recirculation lines discharge into a two inch common line connected to the RWST. This modification is different from the licensee's proposed action for NRC Bulletin 88-04. Specifically, the licensee's letter, dated July 7, 1988, stated that the system will be modified to provide 1" individual pump recirculation lines and a 2" common line. At the exit meeting, the licensee acknolwledge the discrepancy and agreed to update their response to reflect the as-installed configuration of the system.

The post-modification tests determined that each recirculation line performed as designed. Procedure No. SM-3881.4 Rev. 0, documents the test results. The tests also demonstrated that all three pumps can be in the minimum flow recirculation mode at the same time without the potential for deadheading in any of the pumps. The test verified that the new recirculation lines did not compromise the system flow to the RCS. Test Report No. SM-3881.4, 3881.5 was generated to document the results of the post-modification tests. A 10 CFR 50.59 safety analysis was performed by the licensee and is documented in a report titled "Safety Analysis, Ginna Station, SI Pump Recirculation."

The inspectors reviewed the licensee's Design Criteria, the Independent Design Review for the modification and the post-modification tests to the recirculation system. The inspectors found these documents to be complete and accurate and that the licensee had established the minimum flow rates consistent with the pump vendor recommendations. The vendor's recommendations were based on expected differential temperature increases. The vendor indicated that the original 30 gpm recirculation line was adequate to protect the pump against unexpected operation at the shutoff head for very short periods of time. The vendor further suggested that a recirculation flow of 150 gpm for continuous operation (24 hours/day) was acceptable. The inspectors reviewed the results of tests performed at the 100 gpm recirculation flow and found them to meet the acceptance criteria. The ASME Section XI periodic tests for these pumps are routinely performed at 150 gpm.

The inspectors performed a walkdown of the SI recirculation system and verified that the modification was installed as designed. No unsafe conditions were identified.

Conclusion

The licensee has adequately responded to the issues discussed in NRC Bulletin 88-04 for the safety injection system. While the SI system was found not susceptible to the concerns raised, the licensee modified the minimum flow recirculation system to increase flow from 30 gpm to 100 gpm per pump. Post-modification tests demonstrated the following:

- The SI recirculation system is not susceptible to deadheading during parallel operation.
- The minimum flow line is adequate for pump operation in the low flow recirculation mode.
- The modification does not degrade the SI system flow.

4.0 Main Auxiliary Feedwater System

The licensee evaluated the Main Auxiliary Feedwater (AFW) system and determined that the minimum flow concerns raised in Bulletin 88-04 have been adequately addressed in the design and testing of these systems. The inspectors reviewed this system to verify the licensee's conclusions.

Findings

The main AFW system consists of two 100% capacity (200 gpm) motor driven pumps and one 200% capacity turbine driven pump. Each pump is provided with an automatically controlled minimum flow recirculation system to ensure that sufficient minimum flow will be provided under all accident and normal operating conditions. The "A" motor driven pump discharges into the "A" steam generator and the "B" motor driven pump into the "B" steam generator. The turbine driven AFW pump is capable of providing a total flow of 400 gpm to both steam generators.

Each pump has a 1 inch minimum flow line which taps off the pump's discharge piping and has a pressure breakdown orifice before tying in with the other pump's minimum flow line. A sketch of the configuration is shown on Attachment C.

The motor driven pump's minimum flow line orifices are sized for a flow of 40 gpm while that of the turbine driven is sized for 90 gpm. Each of the minimum flow lines has a control valve to regulate the flow through the line relative to the flow in the pumps discharge line. This essentially ensures adequate flow through the pump. The control valve on each of the motor driven pump's minimum flow line is normally closed and opens automatically, as required, based on the pump's discharge pressure. The

licensee's tests demonstrated that the valves were fully open at 80 gpm. Periodic tests verified that vales were fully open at 50 gpm and fully closed at 125 gpm. The control valve in the minimum flow line for the turbine driven pump is normally open and it closes when adequate flow is available in the pump's discharge piping. Periodic tests demonstrate that, at a discharge flow of 100 gpm, the control valve in the recirculation line is fully open.

The licensee has documented results of 48 hour endurance tests for the three main AFW pumps. The minimum flow recirculation mode was tested at 50 gpm for each motor driven pump and at 100 gpm for the turbine-driven pump. The results of these tests were reported to the NRC in RG&E's letters, dated June 8, 1981 and January 8, 1982.

The inspectors reviewed system drawings and performed a walkdown of the minimum flow recirculation system. They observed a discrepancy between as-built configuration and P&ID 33013-1237 Rev. 19. The P&ID did not show that orifices were present on the motor driven pump's recirculation lines. This discrepancy was discussed with the licensee. The issue of drawing discrepancies was addressed in NRC inspection report no. 50-244/87-27 and the licensee had initiated a project to upgrade all P&IDs. The inspectors concluded that the discrepancy identified in P&ID 33013-1237 Rev. 19 was being tracked under this drawing update project for completion. Isometric drawing 4155-B-305-015-III shows the as-built configuration of the orifices. The inspectors identified no other concerns during the system walkdown.

Conclusion

The licensee has adequately evaluated the AFW main system for the concerns addressed in NRC Bulletin 88-04. The inspectors concluded that the pumps were adequately protected against the concerns of the bulletin.

5.0 Standby Auxiliary Feedwater System

The licensee evaluated the configuration of this system and concluded that it was not susceptible to any of the concerns raised in Bulletin 88-04. The scope of this inspection was to verify that the licensee's evaluation is correct, and to verify the actual configuration of the system.

Findings

The Standby Auxiliary Feedwater System (SAFW) has two motor driven pumps each rated at 200 gpm at 1085 psig. Each pump has a 1½ inch recirculation line with an automatic flow controlled air operated valve and a pressure breakdown orifice. The air operated valve is normally closed and fails to the open position. The valve is designed to open when the discharge flow decreases to 80 gpm. Each pump feeds a separate steam generator. The configuration of the recirculation lines is shown on Attachment C. The SAFW pumps are manually actuated and controlled and serve as a backup for the Main Auxiliary Feedwater pumps.

The inspectors performed a walkdown of the minimum flow recirculation configuration and ascertained that it is as described in the drawings. The inspectors also reviewed the system's operating procedure No. ER-AFW.1 Rev. 8 which provides instructions on how and when to use the SAFW pumps. The procedure adequately ensures that the pumps are not operated at shut off head. The pumps are tested monthly per ASME Section XI requirements during which the recirculation valves are verified fully open at a system flow of 50 gpm.

A 48-hour endurance test performed on the pumps demonstrated the adequacy of the 50 gpm minimum recirculation for each pump. The results of this test were reported to the NRC in RG&E's letter, dated May 28, 1980. The pressure breakdown orifices in the recirculation lines upstream of the tie-in prevent pump deadheading when both pumps are in recirculation mode. This joint operation in the recirculation mode will however have to be deliberate and manual since the systems operation (manual) and operating procedure preclude this from happening.

Conclusion

The inspectors found the licensee's evaluation of the SAFW pumps' recirculation system with regards to Bulletin 88-04 adequate. The inspectors concluded that the pumps' operation and operating procedure preclude simultaneous minimum flow recirculation except when done intentionally. The pumps have adequate recirculation lines and they are not susceptible to the concerns raised in the Bulletin.

6.0 Overall Conclusion

The licensee has taken adequate measures to ensure that safety-related pumps are not susceptible to the concerns raised in Bulletin 88-04. The potential for deadheading of one or more pumps in Safety-Related Systems that have a minimum flow line common to two or more pumps or other piping configurations that do not preclude pump-to-pump interactions has been evaluated and adequately addressed. The licensee has also ensured that the minimum flow lines provide adequate capacity for pump operation in the recirculation mode.

The inspectors observed a safety-conscious approach to resolve the concerns addressed in the bulletin. This was evident in the special tests (see "findings" in section 3.0) performed by the licensee to more accurately determine operational limits during parallel pump operation for the RHR system. This is a strength in the licensee's engineering approach to resolving safety issues.

The inspectors noted that the documentation for the systems that were susceptible to the concerns of the bulletin was complete with good technical

details. The inspectors verified that an adequate evaluation was performed prior to determining the acceptability of a system during this review. However, the documentation for the acceptable systems was not adequately maintained. The licensee acknowledged this concern.

7.0 Exit Meeting

The inspectors met with the Station Superintendent and other members of the plant staff on October 19, 1990 to discuss the preliminary inspection findings. At no time during this inspection did the inspectors provide written material to the licensee. The licensee did not identify that the inspectors were provided any proprietary information during this inspection.

ATTACHMENT A

RHR System Pre- and Post-Modification Configuration

Before Bulletin 88-04 Modification

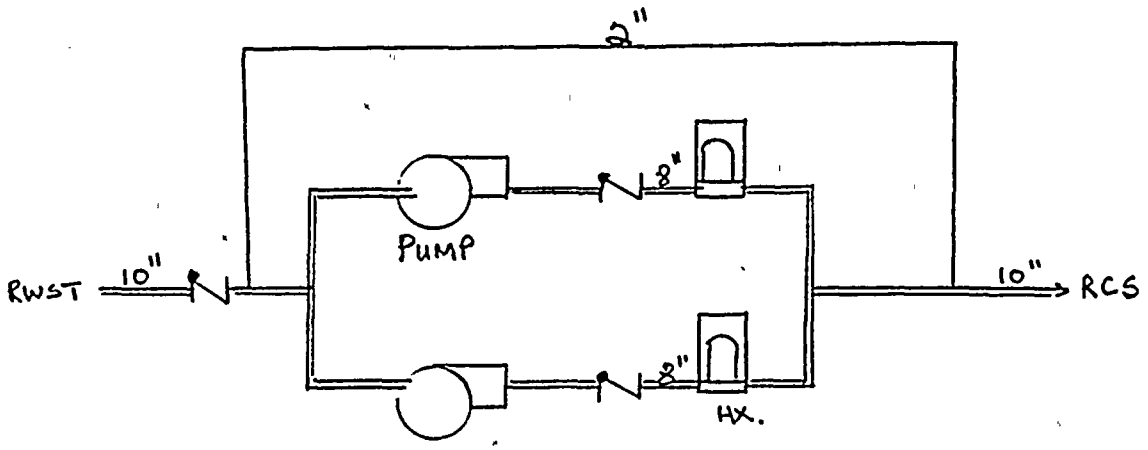

After Bulletin 88-04 Modification

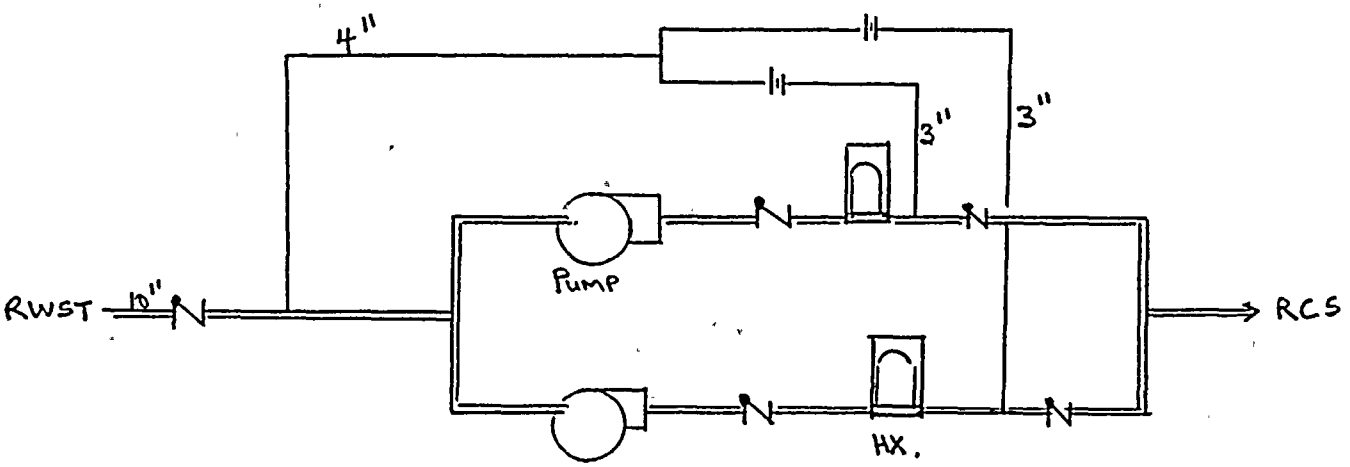

ATTACHMENT B

SI System Pre- and Post-Modification Configuration

Before Bulletin 88-04 Modification

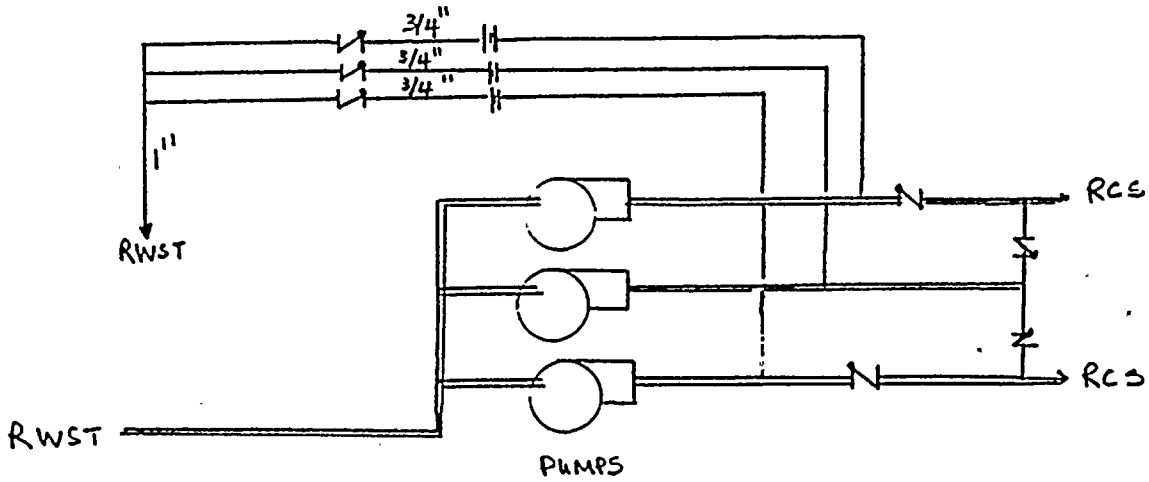

After Bulletin 88-04 Modification

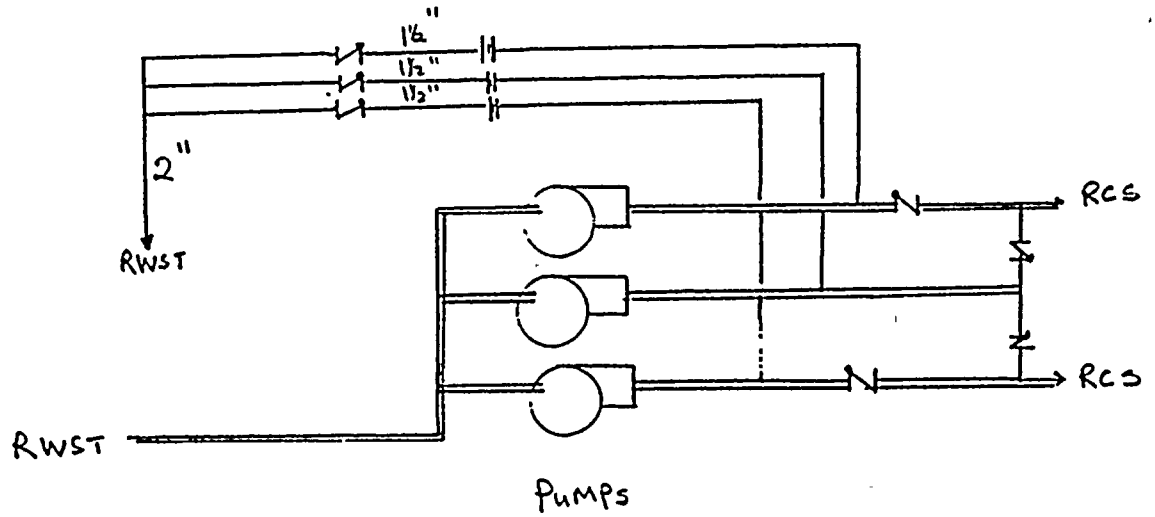

ATTACHMENT C

Main Auxiliary Feedwater Miniflow Recirculation Configuration

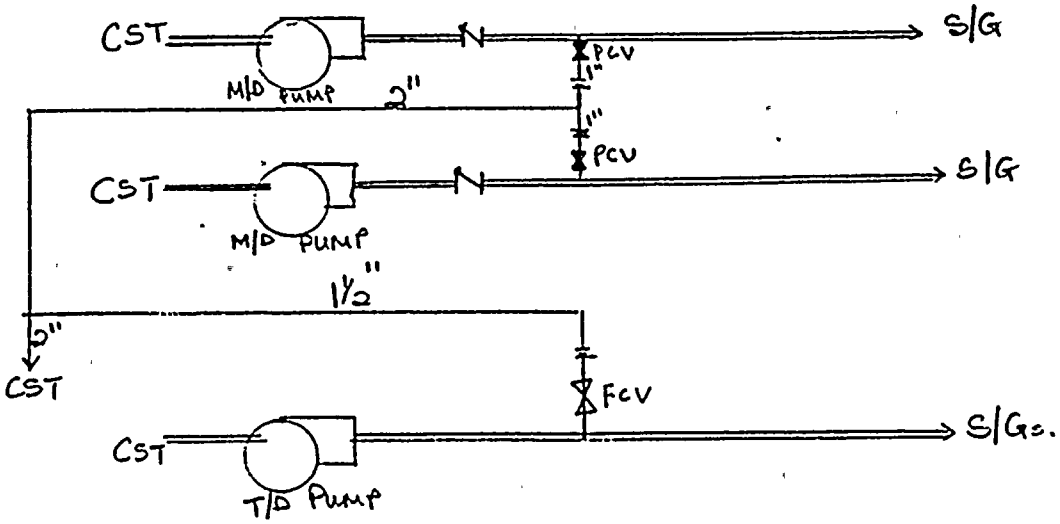

Standby Auxiliary Feedwater Miniflow Recirculation Configuration

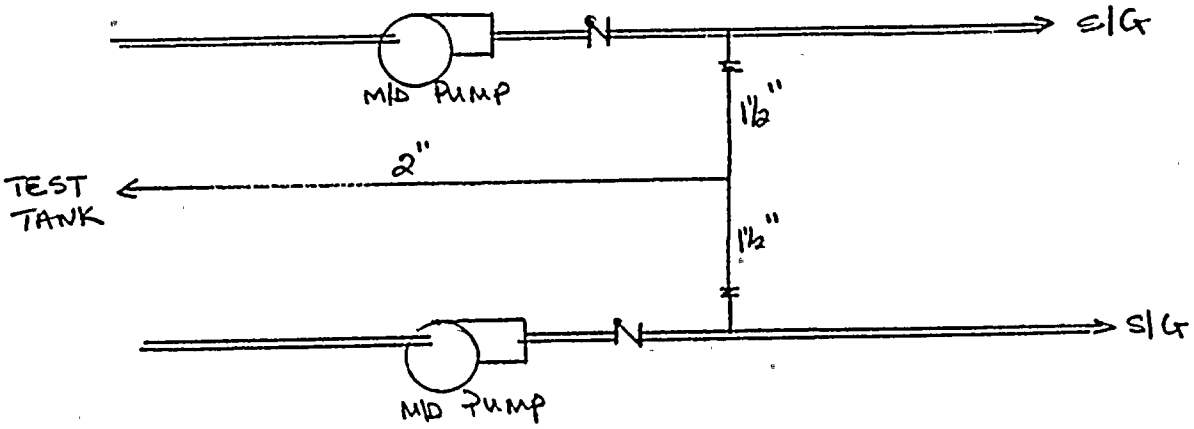

ATTACHMENT D

Persons Present at October 19, 1990 Exit Meeting

RG&E Personnel

Bergstrom, Jon; Mechanical Engineer
Gent, Dennis; ISI/IST Coordinator
Harding, Tom; Modification Coordinator
Hermes, Glen; Nuclear Safety/Licensing
Jones, Alan; Corrective Action Coordinator
Markowski, Dale; Mechanical Engineer
Voci, Gene; Manager, Mechanical Engineering
Widay, Joseph; Superintendent, Ginna Production

NRC

Moslak, Tom; Senior Resident Inspector
Perry, Neil; Resident Inspector