ENGINEERING FILE NUMBER: 318

Inryco
an Inland Steel company

Main Title	REPAIR OF TENDON V-75 FOR R.E. GINNA NUCLEAR POWER PLANT
Sub-Title	REPAIR REPORT

BY

ANTHONY L. FELDER, P.E. ASSISTANT CHIEF ENGINEER

ENGINEERING DEPARTMENT
CONCRETE SYSTEMS DIVISION

ABSTRACT

This report presents the results of repair work conducted on tendon V-75 of the Ginna Power Plant. This tendon had been damaged during the 3rd Year Surveillance and Inryco was called upon to provide a repair procedure and technical assistance.

REVISION CONTROL LOG

Rev.	Revision Date	By	Approved By	Pages Affected
0	11/17/83	A.L.	HHP	i thru v, 1 thru 10, A-1 thru A-7, B-1 thru B-9,
				C-1 thru C-8
1	12/29/83	A.L.	A.L.	i,iii thru v,1,3,6,8,10;B-7,B-9,C-3 thru C-7

Repair of Tendon V-75 for
R. E. Ginna Nuclear Power Plant

SUMMARY

Tendon V-75 of the R.E. Ginna Nuclear Power Plant was damaged during the course of the 3rd Year Surveillance. Inryco was called upon to provide a repair procedure and technical assistance.

Of special concern was the fact that V-75 was not in an ideal condition. The shim halves, which the anchorhead rests upon, were of unequal heights causing the anchorage to be "cocked" by roughly 7 degrees from the vertical. Some of the tendon wires were either broken or protruding above the anchorhead.

Repair work consisted mainly of the following:

1. Tendon destressing.
2. Inspection of the tendon and anchorage for any damage and repair if necessary.
3. Restressing the tendon back to a stress level corresponding to the shim stack height existing at the original installation.

The repair work proceeded successfully during all phases and the following recommendations are made:

1. The tendon should be stressed to a level of 70% GUTS (544 K) ± 5%.
2. A visual reinspection of V-75 should be conducted at a later date.
3. The repaired pull rod and coupler should be replaced.
4. To prevent any similar incidences from happening again, full engagement of all threaded pieces must be enforced during all further tendon operations.

Repair of Tendon V-75 For
R.E. Ginna Nuclear Power Plant

TABLE OF CONTENTS

LIST OF FIGURES

Repair of Tendon V-75 for
R.E. Ginna Nuclear Power Plant

Introduction

The R. E. Ginna containment vessel tendons were retensioned in 1980. During the 3rd Year Surveillance after retensioning, it was noticed that the shims for vertical tendon V-75 were slightly out of line after the tendon had undergone a Liftoff test. The decision was made to take a final liftoff of the tendon, during which the shims were to be placed more in line.

However, the pull rod had not been completely engaged into the stressing adaptor. This led to the pull rod stripping out of the adaptor during liftoff operations, thereby damaging the anchorage and tendon. When the pull rod stripped from the adaptor, the adaptor struck the shims with enough force to expel some shims from the stack (Fig. 1) as well as break several wires in the tendon. The final result was that the adaptor (with the field anchorhead inside) was now "cocked" at an angle of roughly 7 degrees from the vertical.

Rochester Gas and Electric called upon Inryco to provide them with the following:

1. A repair procedure
2. Technical assistance

Repair of Tendon V-75 for
R.E. Ginna Nuclear Power Plant

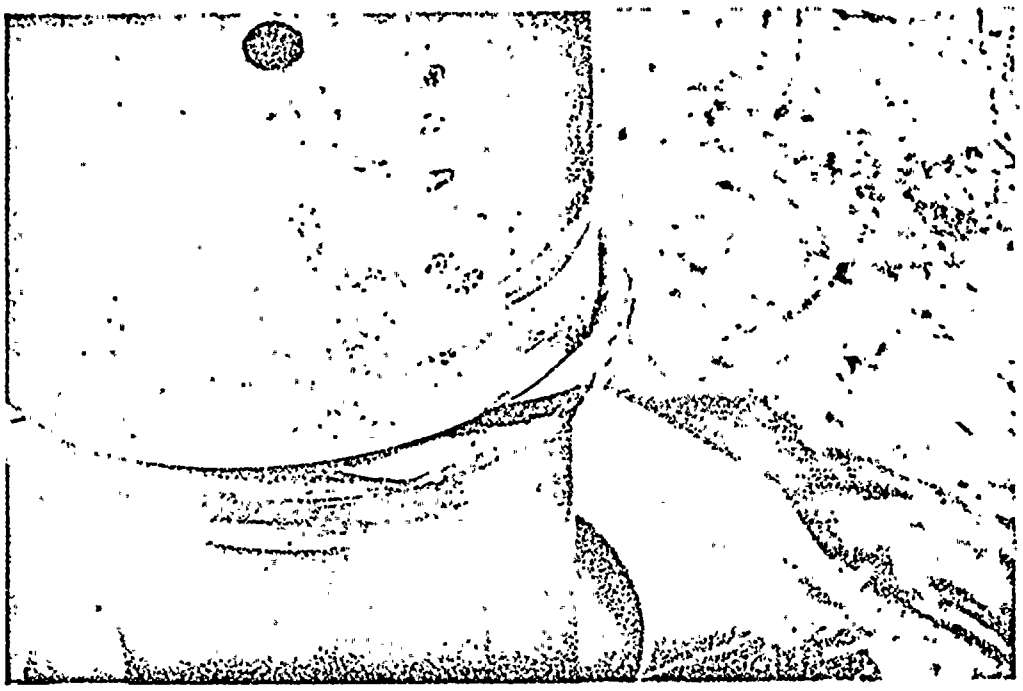

Figure 1 Shims Protruding From Under Adaptor (Note that shims had to be cut with a torch so that jack chair could be placed.)

Repair of Tendon V-75 for R.E. Ginna Nuclear Power Plant

I. Repair of Pull Rod and Adaptor

The threads on the pull rod and adaptor were refinished to allow proper thread engagement. Enough threads were left as to permit a maximum engagement of 3-1/4 inches. The threads were inspected and approved by the Inryco representative (Russell Thompson). Marks were made on the pull rod to assure that maximum engagement was made once the stressing jack was in place.

II. Destressing

Because of the cocked nature of the adaptor, special tapered shims were fabricated (Fig. 2). The jack chair bore directly on these shims which permitted the jack to lie in parallel with the centroid of the adaptor, allowing engagement of the pull rod and adaptor. It should be noted that before the jack chair could be placed over the adaptor, some shims protruding from the shim stack had to be trimmed away with a torch to allow sufficient clearance (Fig. 3). The equipment was reinspected once more before destressing actually began.

Provisions were made for destressing the tendon in stages. This was to allow for the eventual removal of the tapered shims. However, due to sufficient slack in the tendon, it was possible to completely destress in one stage. Liftoff was achieved at about 3950 psi or 504 Kips. Due to the tendon's condition, an actual liftoff test could not be performed. Appendix C contains the data sheets documenting the destressing operation.

Repair of Tendon V-75 for
R.E. Ginna Nuclear Power Plant

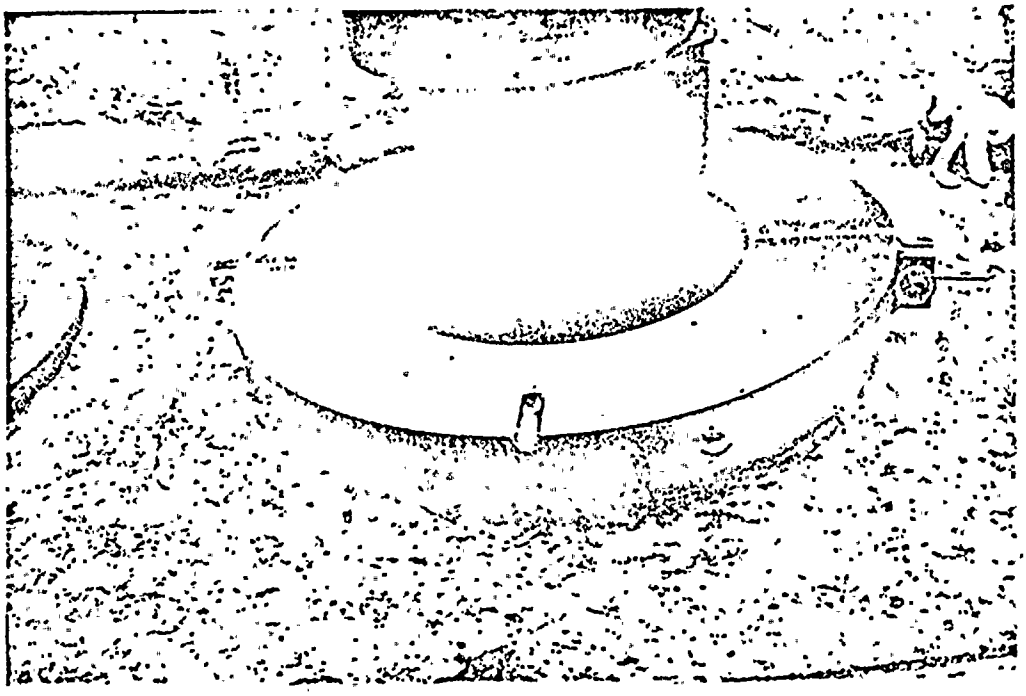

Figure 2 Special Tapered Shims

Figure 3 Tendon Being Destressed

Repair of Tendon V-75 for
R.E. Ginna Nuclear Power Plant

III. Tendon and Anchorage Inspection

The shims had indentations in them due to the tendon wires (Fig. 4,5). This was due to a collision between the shims and wires which also caused several wires to be sheared as the anchorhead shifted over the shim stack. The thinner shims were also slightly deformed due to the impact (Fig. 6,7).

After detensioning, 11 protruding wires were identified (Fig. 8). These wires were removed with a wire puller. A wire continuity test was conducted on every wire (Fig. 9). All told, 24 wires were found broken and removed. The anchorhead was raised 3 inches to visually inspect for any more broken wires (Fig. 10), 66 wires remained intact in the anchorhead and were in good condition.

The field anchorhead was found to be in excellent condition. Appendix C contains the data sheets documenting the inspection process.

Repair of Tendon V-75 for
R.E. Ginna Nuclear Power Plant

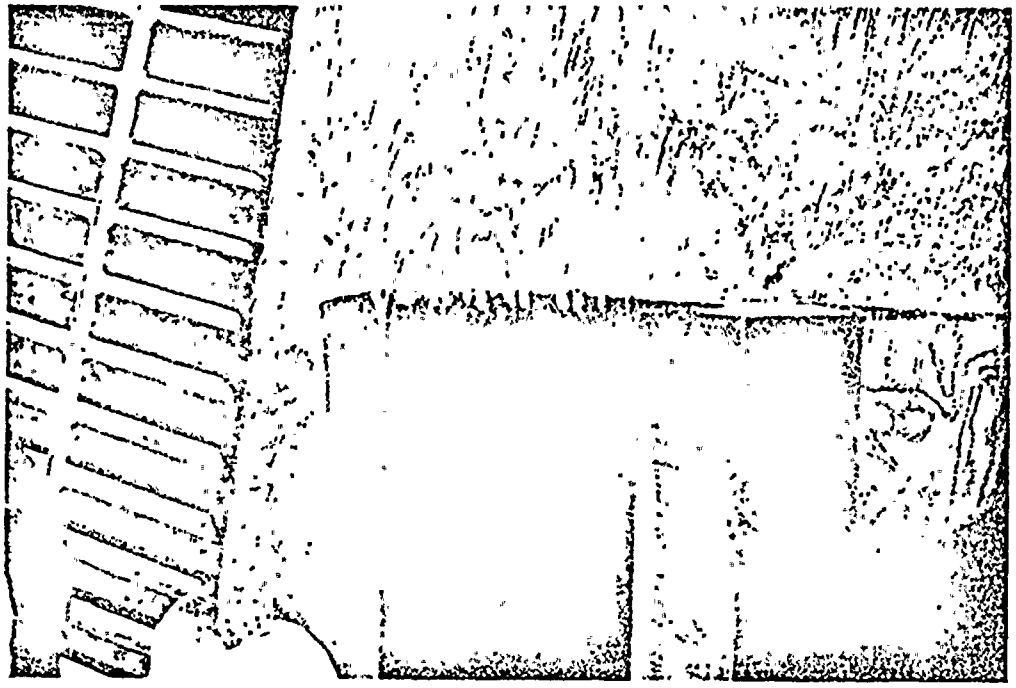

Figure 4 Side View of 8 Inch Shim

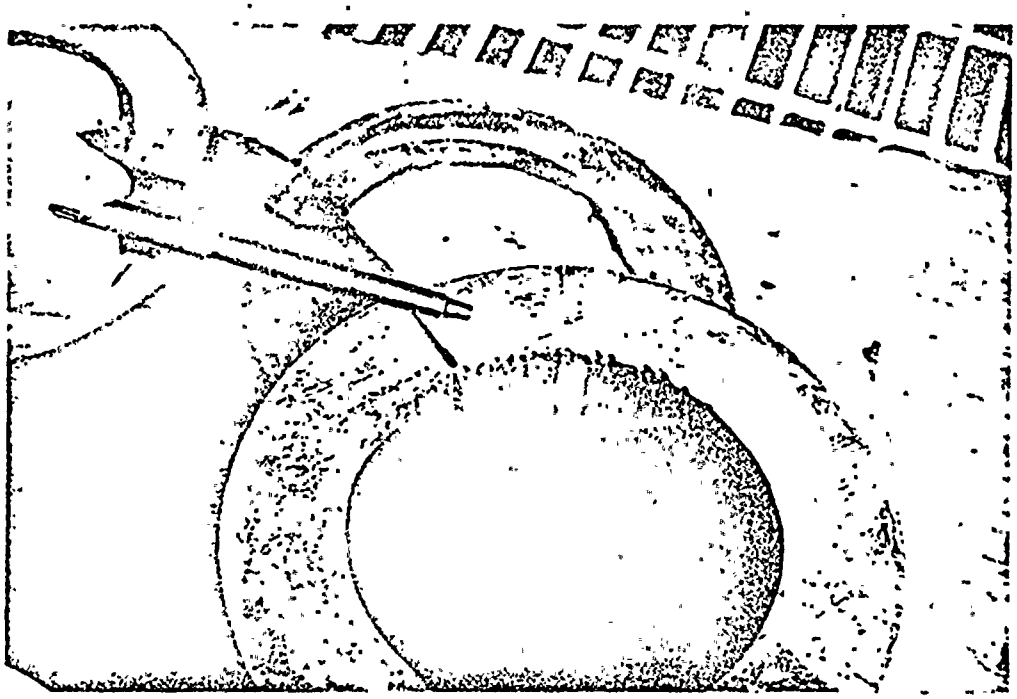

Figure 5 Top View of 8 Inch Shim

Repair of Tendon V-75 for
R.E. Ginna Nuclear Power Plant

Figure 6 Shim Deformation
(Note that shims were originally circular)

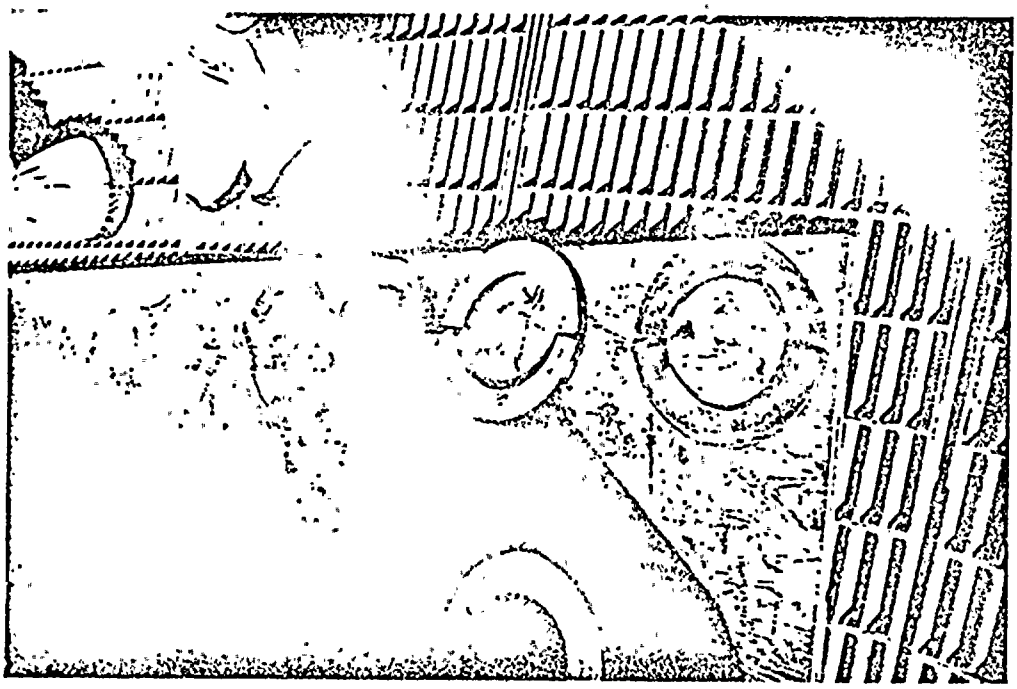

Figure 7 Shims Removed From Tendon

Repair of Tendon V-75 for
R.E. Ginna Nuclear Power Plant

Figure 8 Anchorhead Prior to Wire Continuity Test ⚠
(Note 11 Marked, Protruding Wires)

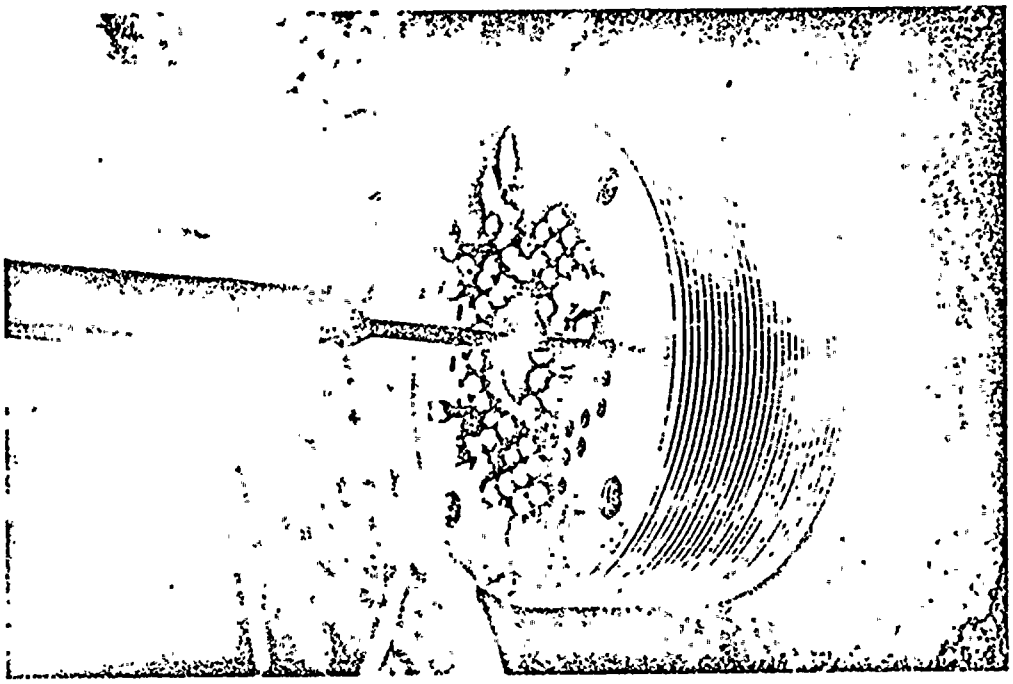

Figure 9 Wire Continuity Test

Repair of Tendon V-75 for
R.E. Ginna Nuclear Power Plant

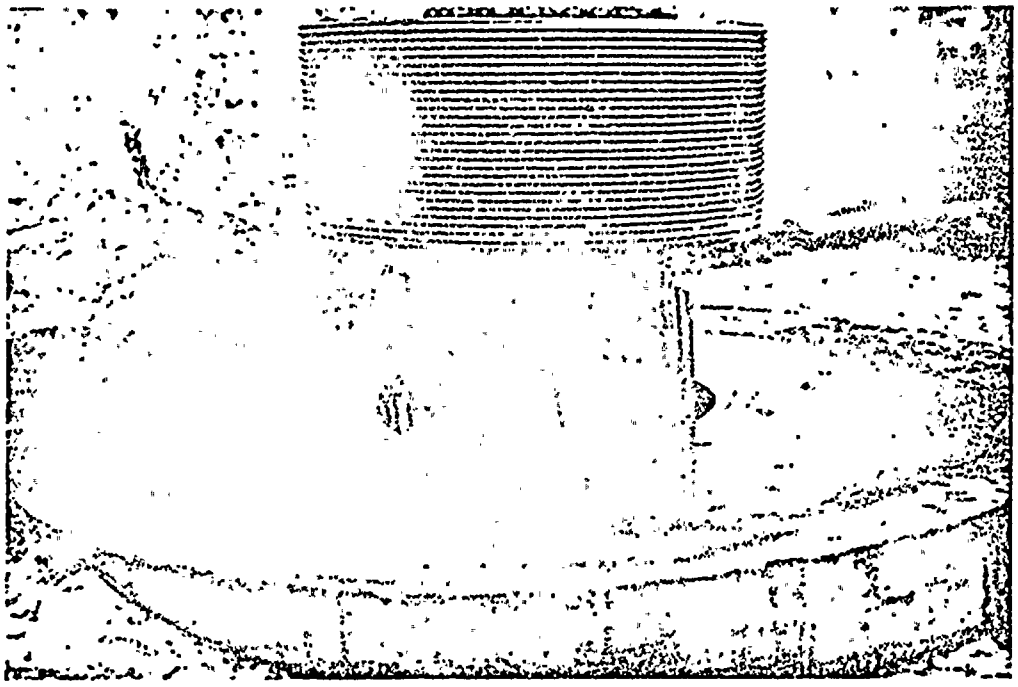

Figure 10 . Raised Anchorhead

Repair of Tendon V-75 for
R.E. Ginna Nuclear Power Plant

IV. Restressing

The original 8 inch shims were milled at both ends to make them square and remove the indentations due to the wires. As a result, the shims were now 7 inches in height.

In accordance with the restressing procedure, the tendon was restressed in stages until it was possible to insert the original 8-3/4 inches of shims. Measured elongations were Less than predicted elongations; giving evidence that no other wires were broken. After retensioning, the tendon was inspected once more and found in good condition (Fig.11). Appendix C contains the data sheets documenting the restressing process.

The final tendon lockoff force was 386 Kips.

Repair of Tendon V-75 for
R.E. Ginna Nuclear Power Plant

Figure 11 Restressed Tendon

Repair of Tendon V-75 for
R.E. Ginna Nuclear Power Plant

Recommendations

The following recommendations are made concerning tendon V-75 or future tendon operations.

1. Tendon V-75 should be restressed to a level of 70% GUTS (Guaranteed Ultimate Tensile Strength) ± 5%. As it was, this tendon was restressed to only 50% GUTS.

2. A visual reinspection should be performed for tendon V-75 as a final measure of resolution of this tendon.

3. As a safety precaution, the repaired pull rod and adaptor should be replaced.

4. For all future tendon operations, full engagement of all threaded components must be enforced at all times.

Repair of Tendon V-75 for
R.E. Ginna Nuclear Power Plant

APPENDIX A Inryco Repair Procedure QA 8309

REPAIR FOR FIELD SURVEILLANCE

R. E. GINNA NUCLEAR POWER PLANT

ROCHESTER GAS & ELECTRIC CORPORATION

Prepared by:	D. W. Wattles	Approved by:	Anthony Dalder
Title:	Supervisor, Quality Assurance	Title:	Assistant Chief Engineer
Date:	10-14-83	Date:	10-14-83

1. SCOPE

This procedure will establish the requirements to complete the repairs for post-tensioning tendon V 75 of the Robert E. Ginna Nuclear Power Plant.

2. RESPONSIBILITY

At this time this procedure considers that Inryco shall only provide the repair procedure and field technical assistance to effect the repairs.

1. R.E. Ginna personnel shall provide the necessary Quality Control, Quality Assurance, Construction Management and Field Labor.

2. R.E. Ginna shall provide all necessary tools, equipment, scaffolds, cranes, repair items, etc. which are essential for the repair and retensioning of the tendon.

3. Inryco shall provide wire gripper for Tendon Wire Continuity Check.

3. PREREQUISITES

1. R.E. Ginna shall provide a shim tapered to match the tilt of the anchorage in its present position. This shim will be used under the jack chair in order to permit a parallel alignment between the ram and the anchorage. This shim shall fully support both legs of the jack chair to prevent gouging the bearing plate.

2. R.E. Ginna shall repair the pullrod and stressing adaptor.

4. TRAINING

All personnel involved in this repair shall be trained, with appropriate documentation to be provided, in the requirements of this procedure.

5. PRECAUTIONS

Care shall be exercised during all the following operations, to avoid personal injury or additional damage to the tendon. Remember that this tendon is still in a stressed condition and shall remain so, until all the shims are removed.

6. DETENSIONING OF TENDON

Before detensioning, a partial inspection (without Wire Continuity Tests - See Section 7.) shall be conducted. Number of effective wires will determine maximum allowable force (80% GUTS). Care shall be exercised during all the following operations, to avoid personal injury or additional damage to the tendon. Remember that this tendon is still in a stressed condition and shall remain so, until all the shims are removed.

6. 1. Grind off or otherwise cut away any excess shim material protruding from the shim stacks, that would interfere with the placement of the ram over the anchorage.

2. Place the tapered shim noted in Section 3.1, onto the bearing plate in the correct direction, to provide parallel alignment of the jack chair with the anchorage.

3. Place ram over the anchorage onto the tapered shim. Adjust as necessary to provide acceptable alignment.

4. Couple pull-rod to stressing adaptor which is connected to the anchorage. Check to ensure full thread engagement.

5. Pressurize the ram to effect a lift-off of the anchorage from the shim stack. This should be only a small lift above the shims to permit removal of the smallest shims. Care should be exercised during this lift-off as this is not a straight line pull on the tendon. Document the lift-off forces on the Data Sheet.

   1. Pressurize ram at about 100 psi/min.

   2. If liftoff is not achieved prior to reaching a gauge pressure delivering a force of 80% GUTS of tendon, pressurization shall discontinue and an evaluation conducted.

   3. When possible, an effort shall be made to re-align the shims so that they bear more completely on each other while allowing the anchorhead to bear completely on the shims.

6. Depressurize the ram, allowing the load to be transferred to the shim stack and to permit the anchorage to begin centering itself over the tendon void. Document the transfer load on the Data Sheet.

   1. Once again, care must be exercised during transfer to make sure the load is <u>securely placed</u> on the shim stack, while the stack remains intact.

7. Repeat Sections 6.5 and 6.6 as many times as necessary until the shim stacks are of equal height. At this time it will be necessary to remove the tapered shims under the jack chair to permit the anchorhead to center itself and allow a straight line pull. It now will be possible to completely destress the tendon in one operation, so long as visual inspection of the location of the anchorhead relative to the tendon void indicates that damage to the tendon will not occur.

8. Remove all equipment.

7. INSPECTION (TO BE CONDUCTED BY GAI/INRYCO)

A full inspection shall be conducted when the tendon is completely detensioned.

1. Inspect the anchorage for damage. Document results on Data Sheet.

   1. Documentation to include: Condition of threads, damage to surfaces of stressing head, and photographs of stressing head and shims.

2. Inspect the wires and buttonheads for damage. Document results on the Data Sheet.

   1. Using the tendon wire gripper, pull each wire with sufficient force to expose 4" of wire above top of wire of stressing head. Visually inspect exposed portion of wire and document nicks, gouges, scratches, etc. Photograph each wire which shows abnormal conditions. Again, mark a copy of the stressing head drawing (Figure 1) showing locations and degree of damage for all continuous wires and locations of missing wires.

   2. Documentation to include: Visual inspection of condition of buttonheads and the visible portion of wires between stressing head and bearing plate with locations of known broken or damaged wires being marked on stressing head drawing.

3. Inspect the bearing plate for damage. Document results on the Data Sheet.

   1. Documentation to include size and location of any ridges, depressions or other unusual conditions.

8. EVALUATION (TO BE CONDUCTED BY GAI/INRYCO)

1. The results of the inspections shall be evaluated for impact on that tendon and possibly the adjacent tendons.

2. Damage to the anchorage and/or bearing plate if any, shall be corrected prior to undertaking retensioning operations.

3. Once the effective number of wires is known, calculations shall be performed to control the lockoff force for retensioning and shim stack height.

   1. The tendon shall be stressed just enough to install the original height of shims (which is from the original stressing records, 8-3/4"). For the purposes of accomplishing the retensioning, calculate the theoretical elongation of the tendon from 1000 psig to 6000 psig in 500 psig increments.

8. 3. 2. Construct a table having columns for Gauge Pressure, Tendon Force, Theoretical Elongation, Ram Position, Measured Elongation. Prior to retensioning, complete columns for Gauge Pressure, Tendon Force, and Theoretical Elongation. Gauge Pressures entered in the table shall be from 1000 to 6000 psig in 500 psig increments. Theoretical Elongation is 0 at 1000 psig.

NOTE: THE TENDON WILL NOT BE STRESSED TO 6000 PSIG. IT WILL BE STRESSED TO A LEVEL NECESSARY TO INSERT THE 8-3/4" SHIM STACK HEIGHT.

9. RETENSIONING

1. The pull-rod shall be attached to the stressing adaptor.

2. The stressing equipment, ram, gauges, etc. shall be in a current calibrated condition.

3. The ram shall be placed over the tendon and coupled to the anchor.

4. The tendon shall be stressed to the level only necessary to install the 8-3/4" shim stack height. During this stressing at 500 psig increments, the gauge pressure, ram position and measured elongation (starting at 1000 psig) are to be recorded in the table prepared in item 8.3.2 above. During this stressing operation, the measured and calculated values of gauge pressure and elongation shall be compared.

   1. With the tendon elongated 8-3/4", before shim installation, visually inspect tendon through windows in jack chair. Document condition, particularly looking for damage to perimeter wires.

5. The shim stack shall be placed to provide the specified height.

   1. The shim stack shall be controlled for uniformity of the height of each stack.

   2. The shim stack shall be placed so that the gap between stacks is not excessive.

   3. The shims shall be placed in such a manner as to control the centering of the load on the bearing plate to the anchorage and over the tendon void.

   4. Document the results of the required shim alignment controls on Data Sheet

6. Seat anchor head on the shim stack and decrease pressure to 2000 psig. Not necessary to specify rate of depressurization of ram.

9. 7. Pressure the ram to verify the lift-off point. The lift-off may be taken by placing, about .035", shim stock into each shim stack. When pressure is applied and the shim stock can be removed, that point is lift-off.

   1. The lift-off force shall be documented.

   8. Transfer the load on to the shim stack by depressurizing the ram.

   9. Uncouple and aside all equipment.

   10. Provide a final visual inspection of the completed tendon.

   11. Apply sufficient quantities of corrosion protection compound to the anchorage, the wires and the void.

   12. Replace the tendon cap.

   13. Fill the void with corrosion protection compound.

10. FINAL REPORT

Develop final report and submit for approval within 30 days after completion of work.

11. CONTINGENCY

In the event that unforeseen problems develop during the repair operation, it is suggested that the tendon remain detensioned until such time that those problems may be corrected and documented.

1. In the event that this procedure becomes unworkable at some point due to the unforeseen problems, an addendum to this procedure shall be developed by Inryco to control that situation.

Repair of Tendon V-75 for
R.E. Ginna Nuclear Power Plant

APPENDIX B R.G.&E. Repair Procedure EM 376

B-2

MASTER

GINNA STATION
UNIT #1
COMPLETED

DATE :-

TIME :-

ROCHESTER GAS AND ELECTRIC CORPORATION

GINNA STATION

CONTROLLED COPY NUMBER 4

PROCEDURE NO. EM-376 REV. NO. 0

TENDON REPAIR FOR TENDON V-75

TECHNICAL REVIEW

PORC REVIEW DATE 10-18-83

QC REVIEW

PLANT SUPERINTENDENT

EFFECTIVE DATE

QA X NON-QA _____ CATEGORY 1.0

REVIEWED BY: _____

THIS PROCEDURE CONTAINS 7 PAGES
+ 6 ATTACHMENTS

EM-376

TENDON REPAIR FOR TENDON V-75

1.0 **PURPOSE:**

1.1 This procedure will establish the requirements to complete the repair for post-tensioning tendon V 75 of the Robert E. Ginna Nuclear Power Plant.

2.0 **REFERENCES:**

2.1 None

3.0 **INITIAL CONDITIONS:**

3.1 At this time this procedure considers that Inryco shall only provide the repair procedure and field technical assistance to effect the repairs. C.A.F.

3.2 RG&E personnel shall provide the necessary Quality Control, Quality Assurance, Construction Management and Field Labor. C.A.F.

3.3 RG&E shall provide all necessary tools, equipment, scaffolds, cranes, repair items, etc., which are essential for the repair and retensioning of the tendon. C.A.F.

3.4 Inryco shall provide wire gripper for tendon wire continuity checks. C.A.F.

3.5 R. E. Ginna shall provide a shim tapered to match the tilt of the anchorage in its present position. This shim will be used under the jack chair in order to permit a parallel alignment between the ram and the anchorage. This shim shall fully support both legs of the jack chair to prevent gouging the bearing plate. C.A.F.

3.6 RG&E shall repair pullrod and stressing adaptor. C.A.F.

3.7 Before detensioning, a partial inspection shall be conducted. Inspection shall determine the number of effective wires to determine maximum allowable force at 80% Guaranteed Ultimate Tensile Strength (GUTS).

C.A.F.

3.8 All personnel involved in this repair shall be trained, with appropriate documentation to be provided, in the requirements of this procedure.

C.A.F.

4.0 **PRECAUTIONS:**

4.1 Care shall be exercised during all the following operations, to avoid personal injury or additional damage to the tendon. Remember that this tendon is still in a stressed condition and shall remain so, until all the shims are removed.

5.0 **INSTRUCTIONS:**

5.1 DETENSIONING OF TENDON:

5.1.1 Use a torch to remove any excess shim material protruding from the shim stack, that would interfere with the placement of the ram over the anchorage.

C.A.F.

5.1.2 Place the tapered shim noted in Section 3.5, onto the bearing plate in the correct direction, to provide parallel alignment of the jack chair with the anchorage.

C.A.F.

5.1.3 Place ram over the anchorage onto the tapered shim. Adjust as necessary to provide acceptable alignment.

C.A.F.

5.1.4 Couple pull-rod to stressing adaptor which is connected to the anchorage. Check to insure full thread engagement.

C.A.F.

5.1.5 Pressurize the ram to effect a lift-off of the anchorage from the shim stack. This should be only a small lift above the shims to permit removal of the shims. Care should be exercised during this lift-off as this is not a straight line pull on the tendon. Document the lift-off forces on the data sheet.

C.A.F.

5.1.5.1 Rate of ram pressurization shall not exceed 100 psi/sec.

C.A.F

5.1.5.2 If lift-off is not achieved prior to reaching a gage pressure delivering force of 80% guts of tendon, pressurization shall discontinue and an evaluation conducted. 5106 PSIG

C.A.F

5.1.5.3 When possible, an effort shall be made to re-align the shims so that they bear more completely on each other while allowing the anchorhead to bear completely on the shims.

C.A.F

5.1.6 Depressurize the ram, allowing the load to be transferred to the shim stack and to permit the anchorage to begin centering itself over the tendon void. Document the transfer load on the data sheet.

C.A.F.

5.1.6.1 Once again, care must be exercised during transfer to make sure the load is securely placed on the shim stack, while the stack remains intact.

C.A.F

5.1.7 Repeat Sections 5.1.5 and 5.1.6 as many times as necessary until the shim stacks are of equal height. At this time, it will be necessary to remove the tapered shims under the jack chair to permit the anchorhead to center itself and allow a straight line pull. It now will be possible to completely destress the tendon in one operation so long as visual inspection of the location of the anchorhead relative to the tendon void indicates that damage to the tendon will not occur.

C.A.F

5.1.8 Remove all equipment.

C.A.F

5.2 INSPECTION (To be conducted by GAI/INRYCO):

5.2.1 A full inspection shall be conducted while tendon is detensioned.

C.A.F

5.2.2 Inspect the anchorage for damage. Document results on the data sheet.

C.A.F

5.2.2.1 Documentation to include: condition of threads, any damage to surfaces of stressing head, and photographs of stressing head and shims.

C.A.F

5.2.3 Inspect the wires and buttonheads for damage. Document results on the data sheet.

C.A.F

5.2.3.1 Documentation to include: visual inspection of condition of buttonheads and the visible portion of wires between stressing head and bearing plate with locations of known broken or damaged wires being marked on stressing head drawing. (Figure 2.0)

C.A.F

5.2.3.2 Using the tendon wire gripper pull each wire with sufficient force to expose 4" of wire above top of stressing head. Visually inspect exposed portion of wire and document nicks, gouges, scratches, etc. Photograph each wire which shows abnormal conditions. Again, mark a copy of the stressing head drawing showing locations and degree of damage for all continuous wires and locations of missing wires.

C.A.F

5.2.4 Inspect the bearing plate for damage. document results on the data sheet.

C.A.F

5.2.4.1 Documentation to include size and location of any ridges, depressions or other unusual conditions.

C.A.F

5.3 <u>EVALUATION</u> (To be conducted by GAI/INRYCO):

5.3.1 The results of the inspections shall be evaluated for impact on that tendon and possibly the adjacent tendons.

C.A.F

5.3.2 The effective amount of wires, once known, shall have calculations performed to control lockoff forces for retensioning and shim stack height.

C.A.F

5.3.2.1 The tendon shall be stressed just enough to install the original height of shims (which is from the original stressing records, 8 3/4"). For the purposes of accomplishing the retensioning, calculate the theoretical elongation of the tendon from 1000 psig to 6000 psig in 500 psig increments.

C.A.F.

5.3.2.2 Prior to retensioning, complete columns on data sheet for Gauge Pressure, Tendon Force, and Theoretical Elongation. Gauge Pressures entered in the table shall be from 0 to 6000 psig in 500 psig increments. Theoretical Elongation is 0 at 1000 psig.

C.A.F.

NOTE: THE TENDON WILL NOT BE STRESSED TO 6000 PSIG. IT WILL BE STRESSED TO A LEVEL NECESSARY TO INSERT THE 8 3/4" SHIM STACK HEIGHT.

5.3.3 Damage to anchorage and/or bearing plate, if any, shall be corrected prior to undertaking retensioning operations.

C.A.F.

5.4 RETENSIONING:

5.4.1 The pull-rod shall be attached to the new stressing adaptor.

C.A.F.

5.4.2 The stressing equipment, ram, gauges, etc., shall be in a current calibrated condition.

C.A.F.

5.4.3 The ram shall be placed over the tendon and coupled to the anchorage.

C.A.F.

5.4.4 The tendon shall be stressed to the level only necessary to install the 8 3/4" shim stack height. During this stressing at 500 psig increments, the gauge pressure, ram position and measured elongation (starting at 1000 psig) are to be recorded in the table. During this stressing operation, the measured and calculated values of gauge pressure and elongation shall be compared.

C.A.F. △

5.4.4.1 With the tendon elongated 8 3/4+", before shim installation, visually inspect tendon through windows in jack chair. Document condition, particularly looking for damage to perimeter wires.

C.A.F

5.4.5 The shim stack shall be placed to provide the specified height. Document the order and size of shims on the data sheet.

C.A.F

5.4.5.1 The shim stack shall be controlled for uniformity of the height of each stack.

C.A.F

5.4.5.2 The shim stack shall be placed so that the gap between stacks is not excessive.

C.A.F

5.4.5.3 The shims shall be placed in such a manner as to control the centering of the load on the bearing plate to the anchorage and over the tendon void.

C.A.F

5.4.5.4 Document the results of the required shim alignment controls on the data sheet.

C.A.F

5.4.6 Seat anchor head on the shim stack and decrease pressure to 2000 psig. Not necessary to specify rate of depressurization of ram.

C.A.F

5.4.7 Pressurize the ram to verify the lift-off point. The lift-off may be taken by placing, about .035", shim stock into each shim stack. When pressure is applied and the shim stock can be removed, that point is lift-off.

C.A.F

5.4.7.1 The lift-off force shall be documented on the data sheet.

C.A.F

5.4.8 Transfer the load on to the shim stack by depressurizing the ram.

C.A.F

5.4.9 Uncouple and aside all equipment.

C.A.F

B-7

5.4.10 Provide a final visual inspection of the completed tendon.

C.A.F.

5.4.11 Apply sufficient quantities of corrosion protection compound to the anchorage and the wires to provide protection against moisture until testing is complete and the void can be filled.

C.A.F.

5.4.12 Replace the tendon cap.

C.A.F.

5.5 FINAL REPORT:

5.5.1 Develop final report and submit for approval within 30 days after completion of work.

C.A.F.

5.6 CONTINGENCY:

5.6.1 In the event that unforeseen problems develop during the repair operation, it is suggested that the tendon remain detensioned until such time that those problems may be corrected and documented. Otherwise mark N/A.

N/A

COMPLETED BY: Clyde A. Forbes

DATE COMPLETED: 11-21-83

Q. C. SUPERVISION: _____

R&T SUPERVISION: _____

PORC REVIEW DATE: _____

Repair of Tendon V-75 for
R.E. Ginna Nuclear Power Plant

APPENDIX C Repair Work Data Sheets

Tendon No. 75 Anchorage Repair

Data Sheet 1 - Detensioning Record

Date: 10/19/83

1) Tendon Identification No. 75 Anchorhead No. AG-60

2) Hydraulic Jack No. RJ-500-12 Pump No. 797 KRTA MM 1904

3) Pressure Gauge No. 0090

4) Hydraulic Ram Calibration Equation: Force (Kips)*=0.896+0.1274xG.P.(PS

5) Initial Anchorage Conditions: initial inspection revealed 10 broken or missing wires and 11 protruding wires per sketch (Fig 2.0). Inspection at lift-off revealed 23 broken wires.

6) Pressurization/Depressurization Record: Table 1.0

Condition	Maneuvers 1st	2nd	3rd	4th	5th
a. Lift-Off - Pressure (PSI)	3950				
- Force (Kips)*	504.1				
- Ram Position (inches)	I. 7 F. 7 1/2 - 7 3/4				
b. Transfer - Pressure (PSI)	0				
- Force (Kips)*	0				
- Ram Position (inches)	0				
c. Shim Removal	See below / Remv 2" Tapered /				
d. Shim Addition	2" + 2" Tapered / None /				
e. Comments	1st lift, removed all small shims & 8" shim. All transfer anchorage does not seat on plate. Therefore the 2" shim was removed. After epoxy removal the anchorhead seated on bearing plate.				

Completed by: Clyde Foster

Date: 10/19/83

ATTACHMENT --
C-3

Tendon No. 75 Anchorage Repair

Data Sheet 2 - Inspection Record

AFTER DETENSIONING

Date: OCT 19 1983
11:30 AM

1) Tendon Identification No. 75 Anchorhead No. AG 60

2) Hydraulic Jack No. RJ-500-12 Pump No. ~~0090~~ 797KRTA MM1904

3) Pressure Gauge No. 0090

4) Anchorage Inspection

a. Thread Condition: EXCELLENT

b. Surface Condition: GOOD - 4 small indentations noted on sketch - less than 1/32" deep. Probably there originally - not due to tendon accident.

5) Wire and Buttonhead Inspection

a. Comments: Pulled the 11 protruding wires previously identified and marked - Found 1 additional wire which was broken + pulled it. See data sheet. Total of 22 broken wires removed as of 11:30 am. Photos taken. 11:45 AM: found 2 more broken (* on Data Sheet). - TOTAL 24 BROKEN AS OF 11:45 AM

b. Complete Figure 2.0: ✓ ⚠

6) Bearing Plate Inspection

a. Comments: No Damage. Some seals outside "O" ring.

7) Miscellaneous Comments: Photos taken of damaged shims. 1:30 pm - raised anchor head 3". No more broken wires seen. 2 bent wires seen (Data Sheet) No other damage observed than the two bent wires.

Completed by: J F Fulton
Oct. 19 1983
Russell Thompson
10-19-83

ATTACHMENT III
C-4

1 of 2

FIGURE 2.0

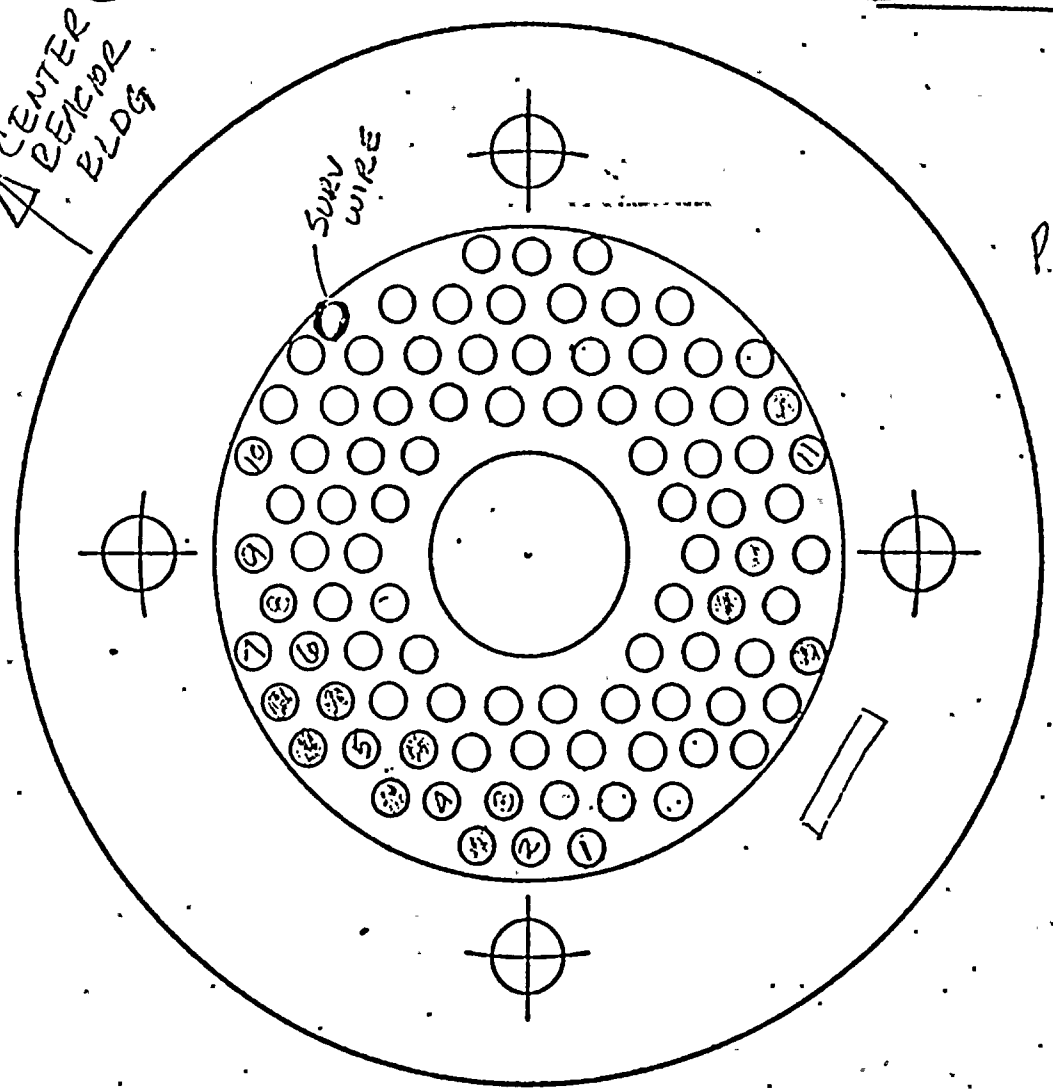

PROTRUDING

1	7/8"
2	1 1/4"
3	7/8"
4	1"
5	1/2"
6	1 3/8"
7	1"
8	5/8"
9	7/8"
10	1/2"
11	1/8"

● - Broken Wires (C.A.F. 10/26/83)

NOTES:

1. MARK LOCATION OF ANCHOR-HEAD NUMBER IN PLAN VIEW.
2. SHOW ARROW POINTING TOWARD CENTER OF REACTOR BLDG.
3. BLACKEN WIRE HOLE TO INDICATE BROKEN WIRES.
4. INDICATE LOCATION OF DAMAGED WIRES & DOCUMENT DAMAGE FOR EACH WIRE.

PRIOR TO DETENSIONING

Completed By: J.J. Tucson R.D. Thompson

Date:

ATTACHMENT III C-5

2 of 2

FIGURE 2.0

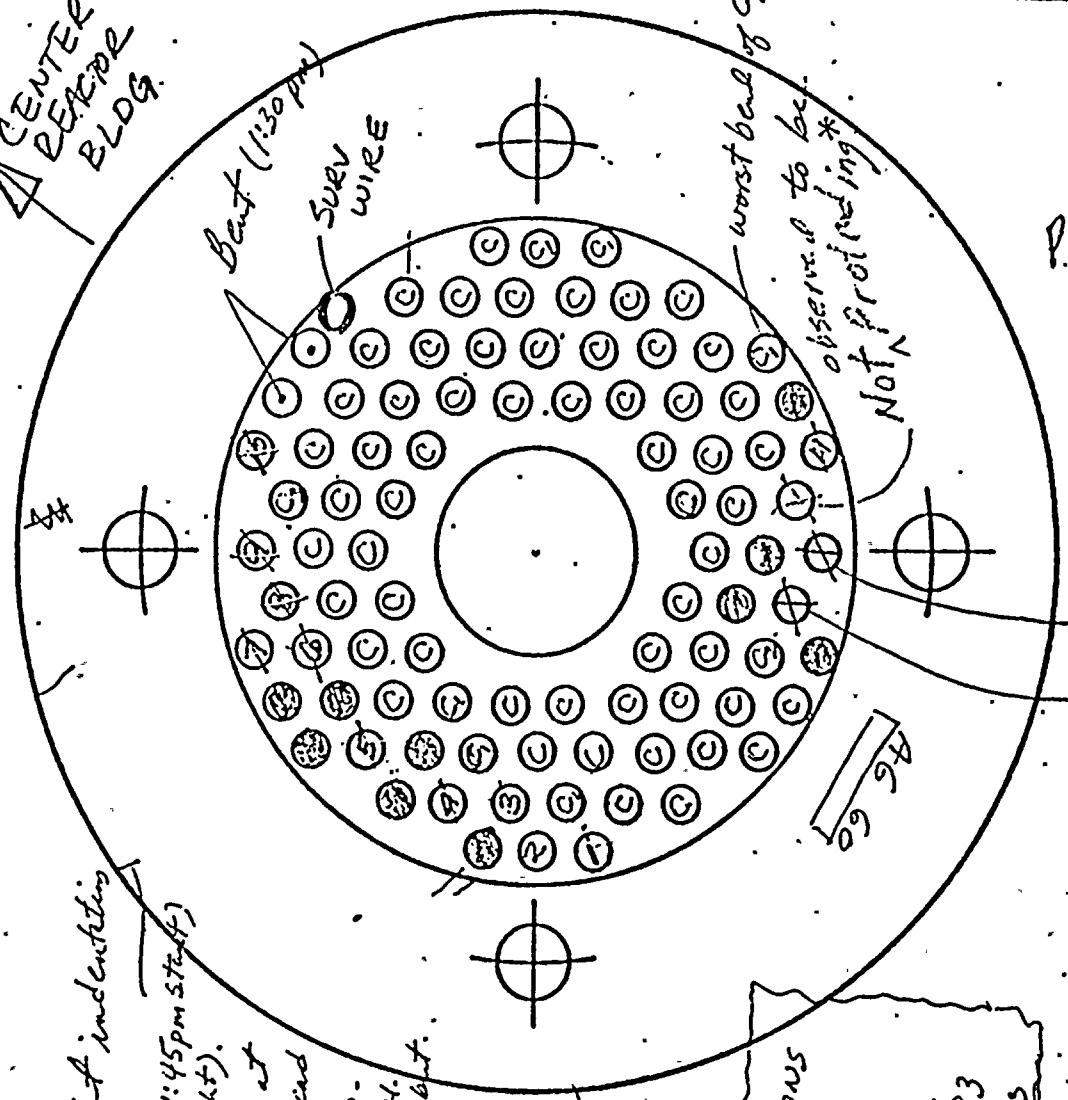

PROTRUDING

1. 7/8"
2. 1 1/4"
3. 7/8"
4. 1"
5. 1 1/2"
6. 1 3/8"
7. 1"
8. 5/8"
9. 7/8"
10. 1/2"
11. 1/8"

+ 10-19 Bolts + nuts

CONTINUITY TESTS (1:45 pm start)

C_1 slight bed (very slight).

C_2 slight depression of 3 3/4" from buttonhead

C_3 - wire not pulled up - from underside A.H. wire observed to be but No other damage - continuous.

Completed at 3:40 pm

ADDITIONAL INSPECTIONS

DATE: 10-19-83

Completed By J. Fulton 10-19-83 R.D. Thompson 10-19-83

NOTES:

1. MARK LOCATION OF ANCHOR-HEAD NUMBER IN PLAN VIEW.
2. SHOW ARROW POINTING TOWARD CENTER OF REACTOR BLDG.
3. BLACKEN WIRE HOLE TO INDICATE BROKEN WIRES.
4. INDICATE LOCATION OF DAMAGED WIRES & DOCUMENT DAMAGE FOR EACH WIRE.

PRIOR TO DETENSIONING

Completed By: J. Fulton R.D. Thompson

Copy

Date: —

ATTACHMENT IV
C-6

Tendon No. 75 Anchorage Repair

Data Sheet 3 - Retensioning Record

Date: 10/19/83

1) Tendon Identification No. 75 Anchorhead No. AG-60

2) Hydraulic Jack No. RJ500-12 Pump No. 797 KRTAMM.1904

3) Pressure Gauge No. 0090

4) Hydraulic Ram Calibration Equation Force (Kips)*=0.896+0.1274xG.P.(PSI

5) Elongation Record: Table 2.0

Gauge Pressure (PSI)	Force* (Kips)	Calculated Elongation* (inches)	Ram Position (inches)	Measured Elongation (inches)
0	0.9	—	1/4	0
500	64.6	—	1-3/4	0
1000	128.3	0	2-3/8	0
1500	192.0	~~0.65~~ 0.86	3-3/16	0.81
2000	255.7	~~1.26~~ 1.72	4	1.63
2500	319.4	~~1.89~~ 2.58	4-3/4	2.38
3000	383.1	~~2.52~~ 3.44	5-9/16	3.19
3250 3500	414.9 ⚠ 446.8	~~3.15~~ 4.30	6	~~5 3/4~~ 3.63 ⚠
4000	510.5	~~3.78~~ 5.15		
4500	574.2	~~4.41~~ 6.01		
5000	637.9	~~5.04~~ 6.87		
5500	701.6	~~5.67~~ 7.73		
6000	765.3 ⚠ ~~756.3~~	~~6.30~~ 8.59		

6) Condition of Tendon: No additional damage to tendon wires was observed. After retensioning, no protruding wires were observed.

7) Steel shims added for 8-3/4" stack height:
Size By Order from Base Plate: 7"/1"/1/2"/1/4"

F = 66 eff. wires x 0.0491 in² x .70 x 240 KSi = 544.5^K

GP. = 544.5^K − 0.896^K = .4767 psi

* Values should have been multi

Tendon No. 75 Anchorage Repair

Data Sheet 3A - Retensioning Record

8) Results of Shim Alignment: Complete Figure 3.0

9) Ram Pressure and Force at Lift-Off: PSI 1) ~~3000~~ 2950 2) 3040 Kips 386.3

10) Ram Position at Lift-Off: Inches 1) 6 2) 6-1/16 1a) 2800 2a) 3250 (Avg. = 3025)

1a) 6-1/8
2a) 6-3/16

Note: 1st set of data taken with shim stack equal to 8-5/8" instead of 8-3/4"

Completed by: Clyde R. Faber

Date: 10/19/83

Russell Thompson 10-19-83

J H Fulton 10-19-83

CAF/107

FIGURE 3.0

ANCHORHEAD/SHIM ALLIGNMENT

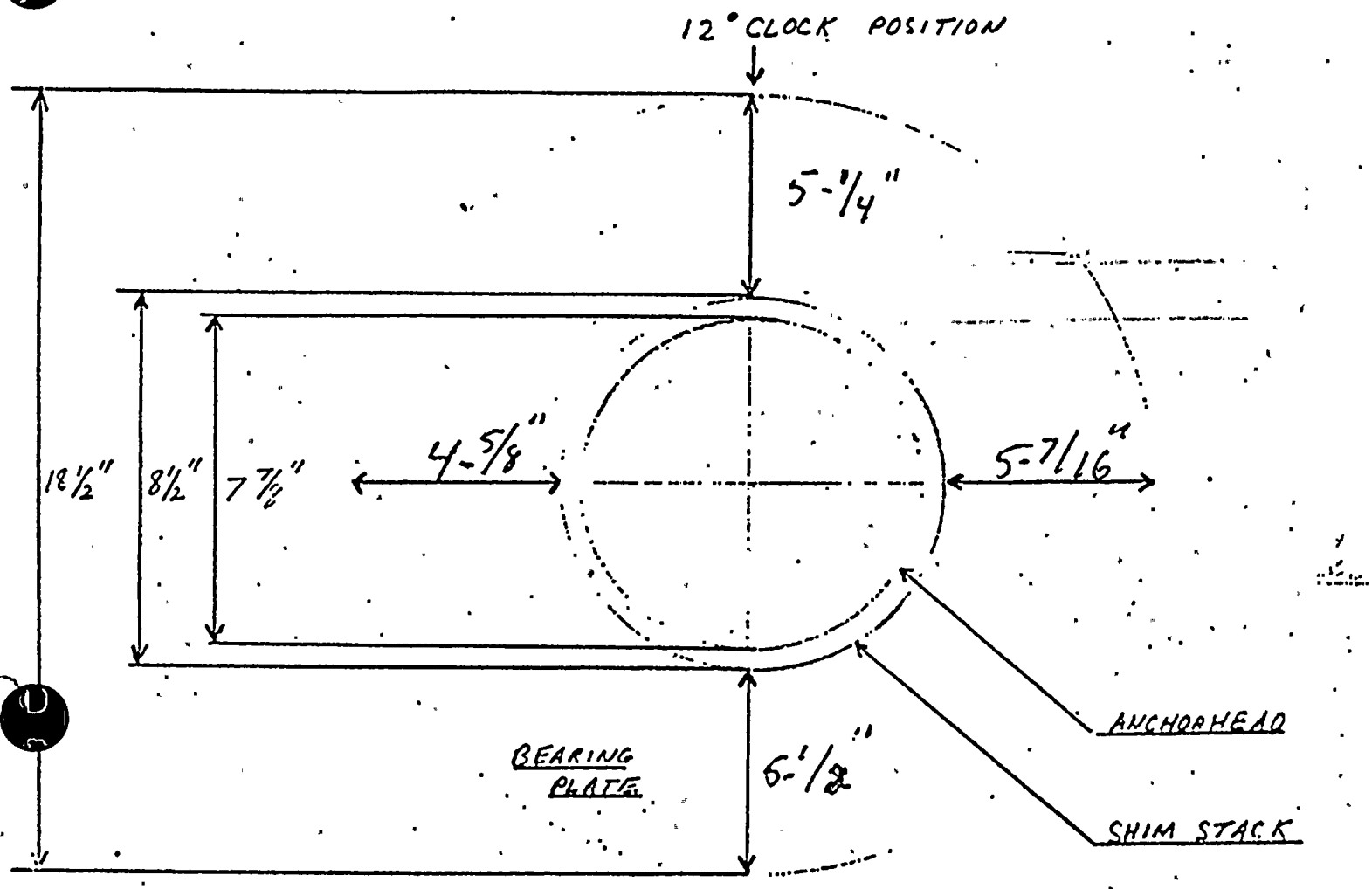

Note: 12° CLOCK Positions toward Center of Dome

Documentation:

1) Mark in distances between Shim Stack and edge of Bearing Plate.
2) Show Location of Shim Separation.

Completed By: Clyde A. Faber
Date: 10/19/82