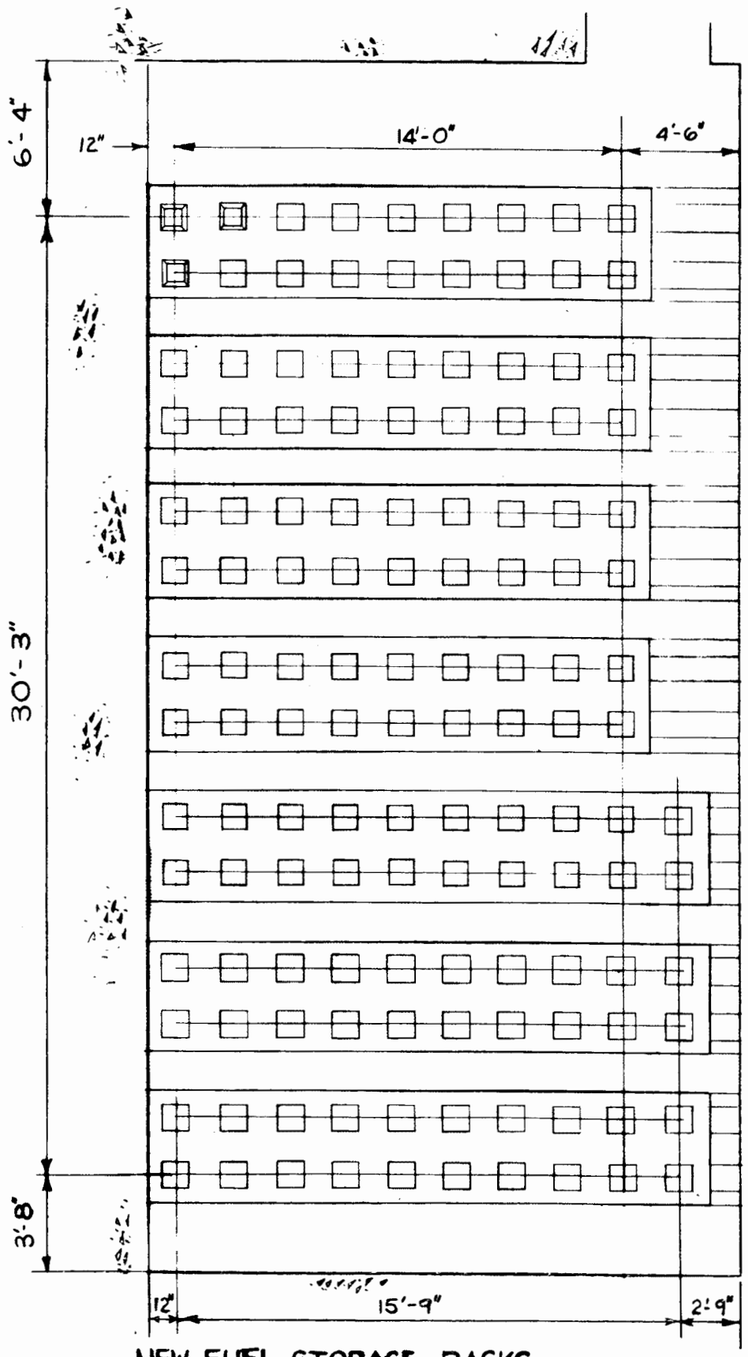

NEW FUEL STORAGE RACKS
(132 ASS'Y)

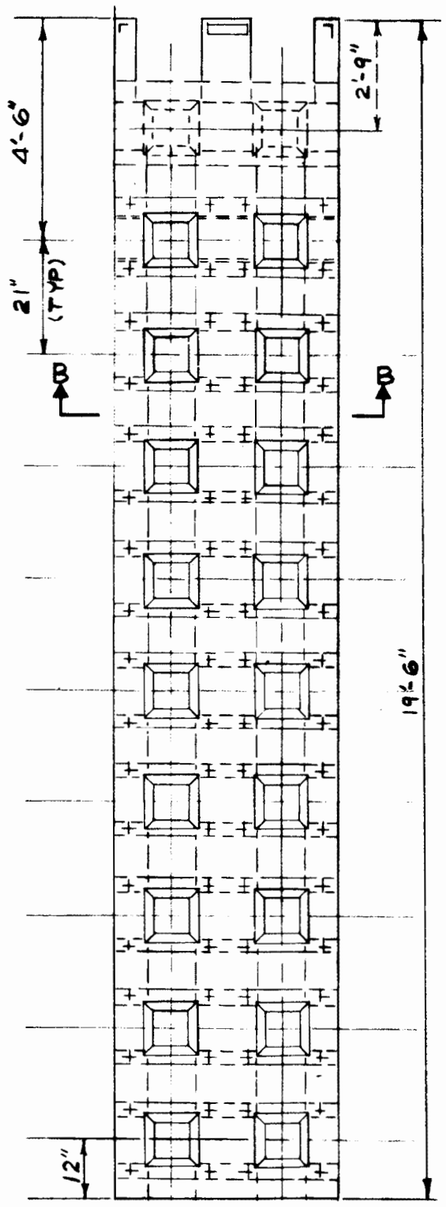

PARTIAL PLAN A

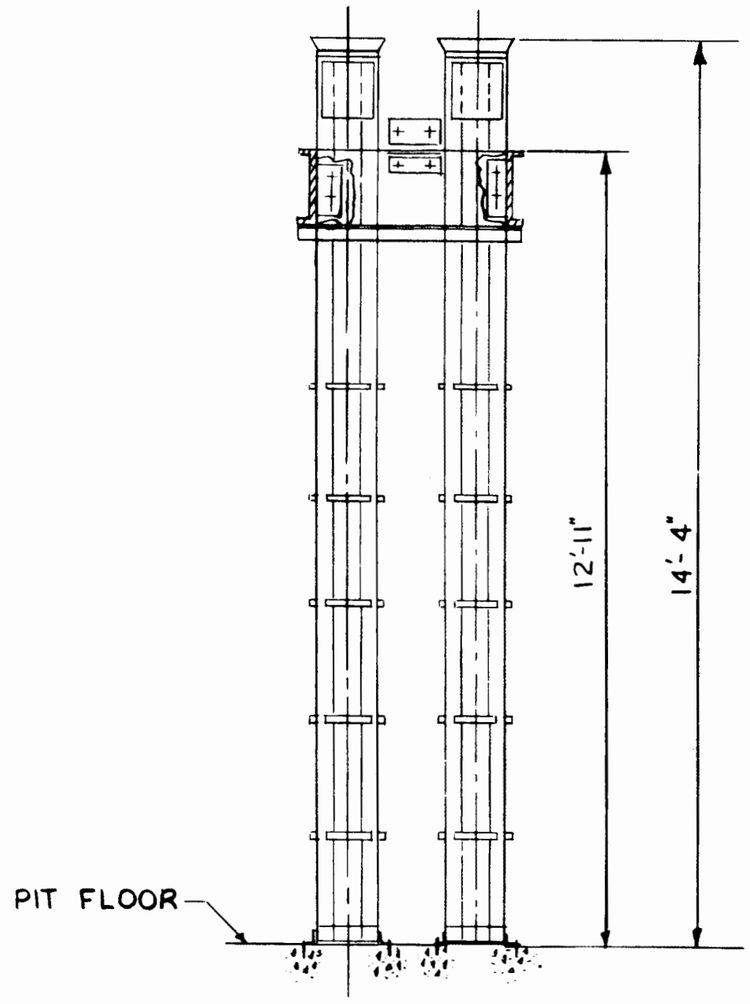

SECTION B-B

COMANCHE PEAK S.E.S.
FINAL SAFETY ANALYSIS REPORT
UNITS 1 and 2

NEW FUEL STORAGE RACKS

FIGURE 9.1-1

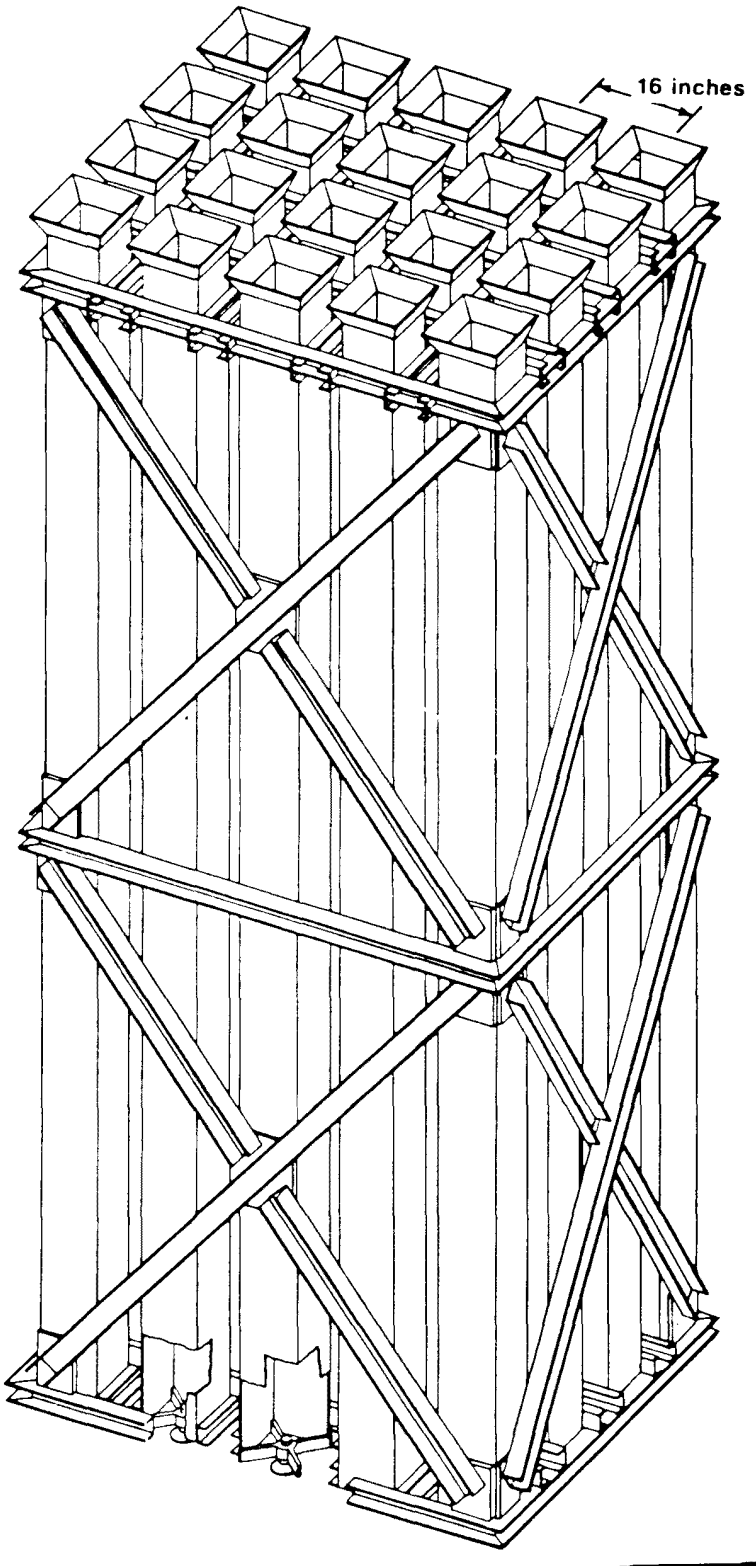

Typical

COMANCHE PEAK S.E.S.
FINAL SAFETY ANALYSIS REPORT
UNITS 1 and 2

Spent Fuel Low Density Rack

FIGURE 9.1-2

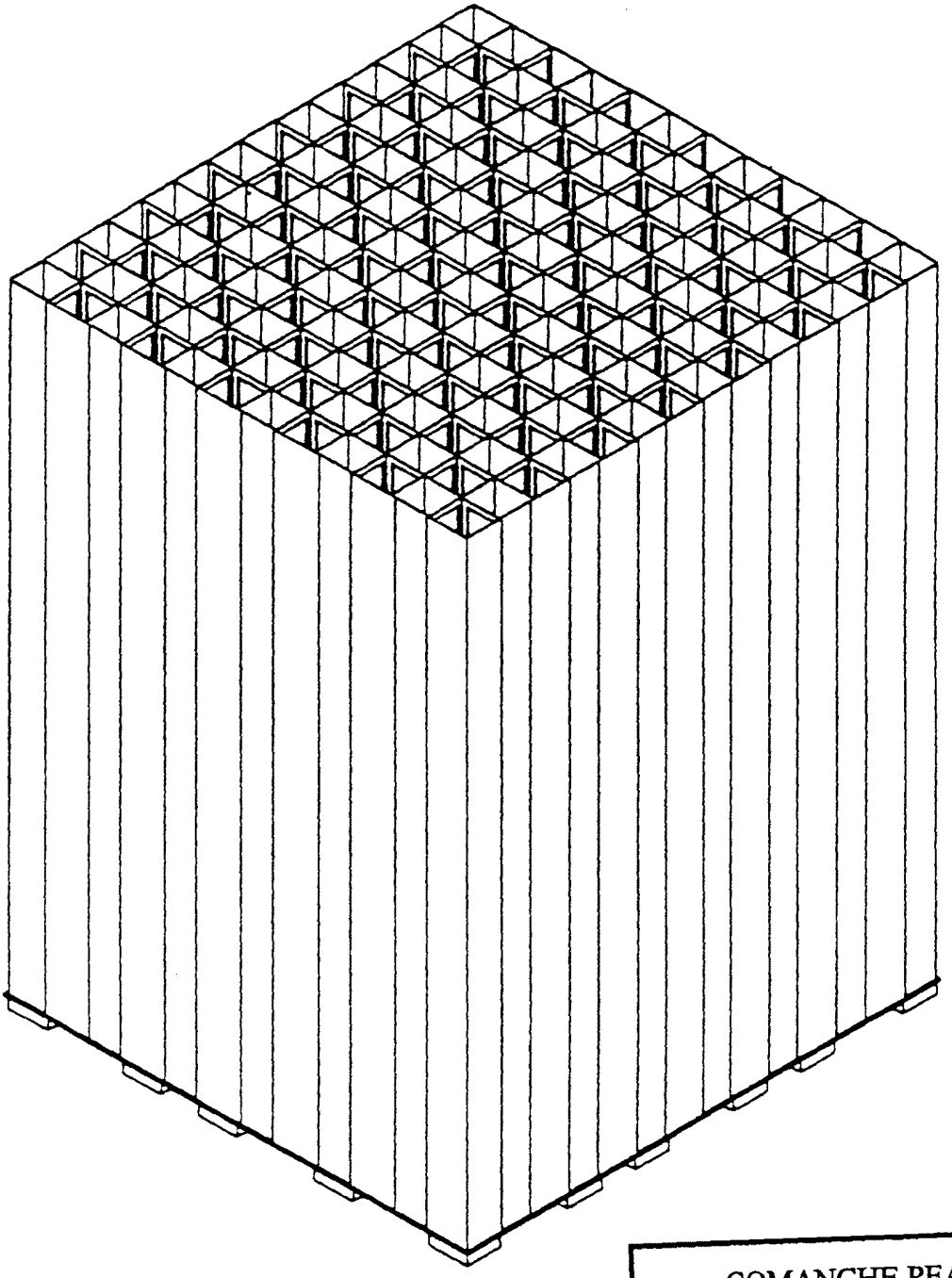

Spent Fuel

COMANCHE PEAK S. E. S.
FINAL SAFETY ANALYSIS REPORT
UNITS 1 and 2

Typical
Amendment 98

Figure 9.1-2A

Amendment 94
August 1, 1996

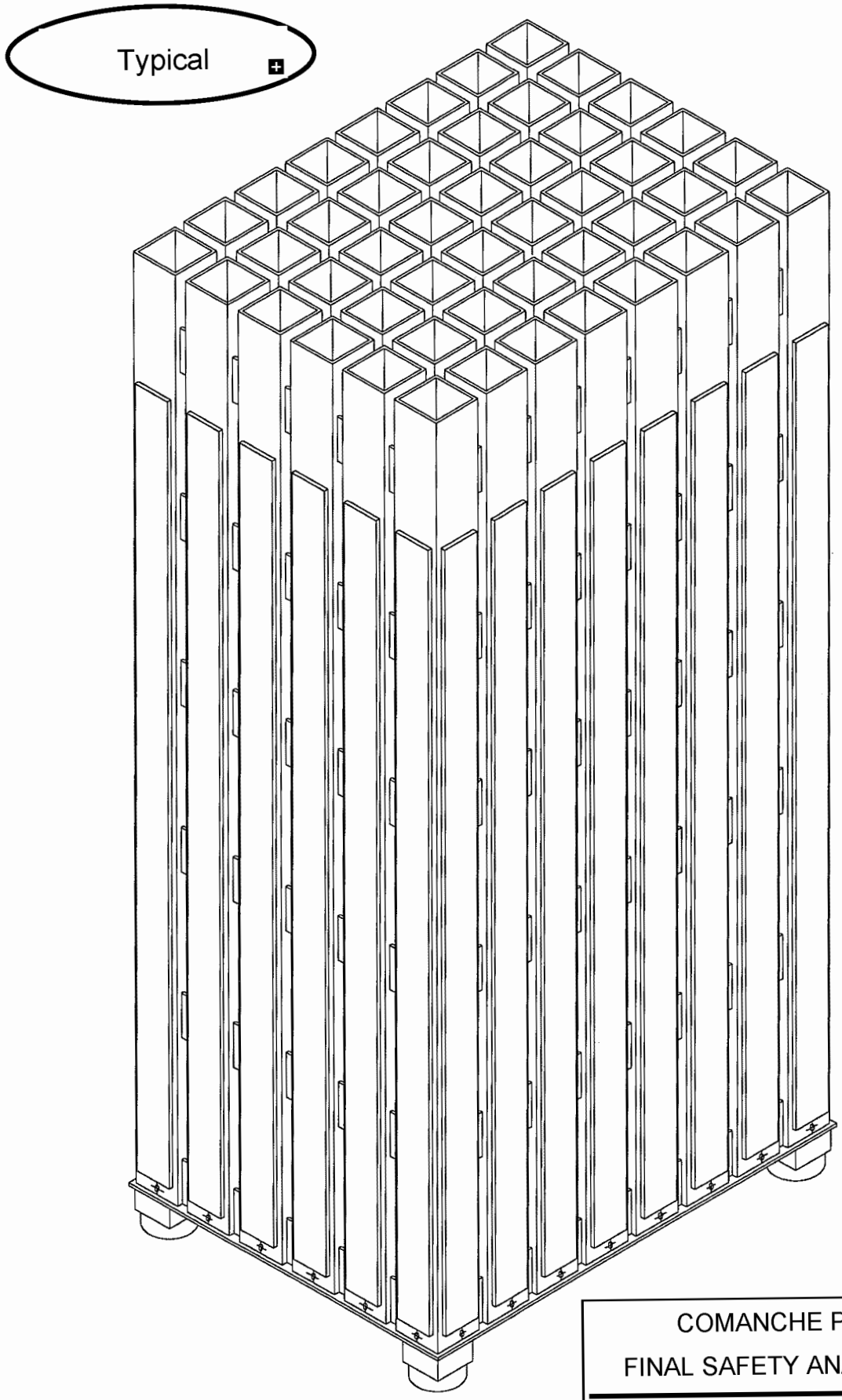

COMANCHE PEAK S. E. S.
FINAL SAFETY ANALYSIS REPORT

Spent Fuel High Density Region I Rack

Figure 9.1-2B

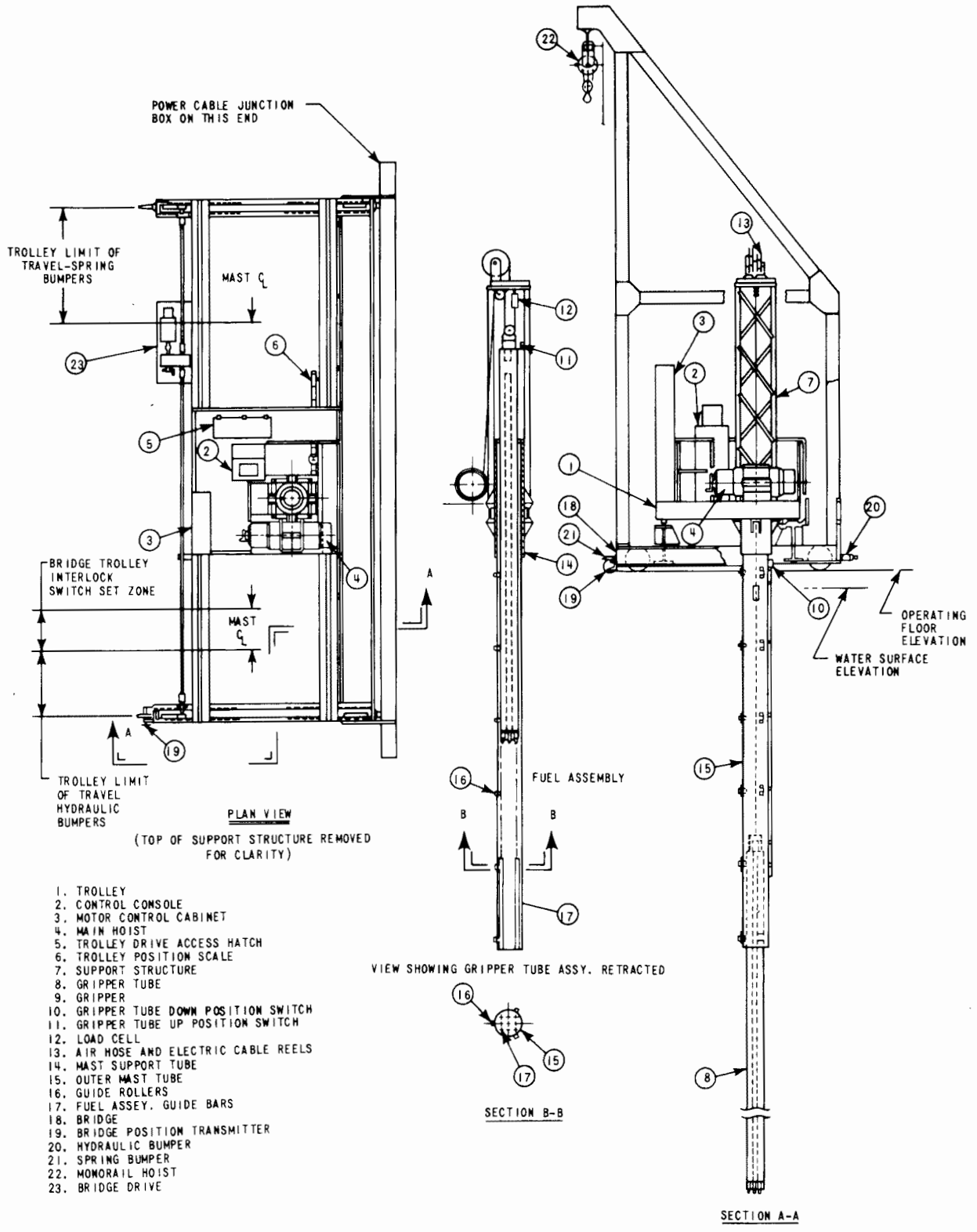

1. TROLLEY
2. CONTROL CONSOLE
3. MOTOR CONTROL CABINET
4. MAIN HOIST
5. TROLLEY DRIVE ACCESS HATCH
6. TROLLEY POSITION SCALE
7. SUPPORT STRUCTURE
8. GRIPPER TUBE
9. GRIPPER
10. GRIPPER TUBE DOWN POSITION SWITCH
11. GRIPPER TUBE UP POSITION SWITCH
12. LOAD CELL
13. AIR HOSE AND ELECTRIC CABLE REELS
14. MAST SUPPORT TUBE
15. OUTER MAST TUBE
16. GUIDE ROLLERS
17. FUEL ASSEY. GUIDE BARS
18. BRIDGE
19. BRIDGE POSITION TRANSMITTER
20. HYDRAULIC BUMPER
21. SPRING BUMPER
22. MONORAIL HOIST
23. BRIDGE DRIVE

11.946-10

COMANCHE PEAK S.E.S.
FINAL SAFETY ANALYSIS REPORT
UNITS 1 and 2

Refueling Machine

FIGURE 9.1-3

CPE

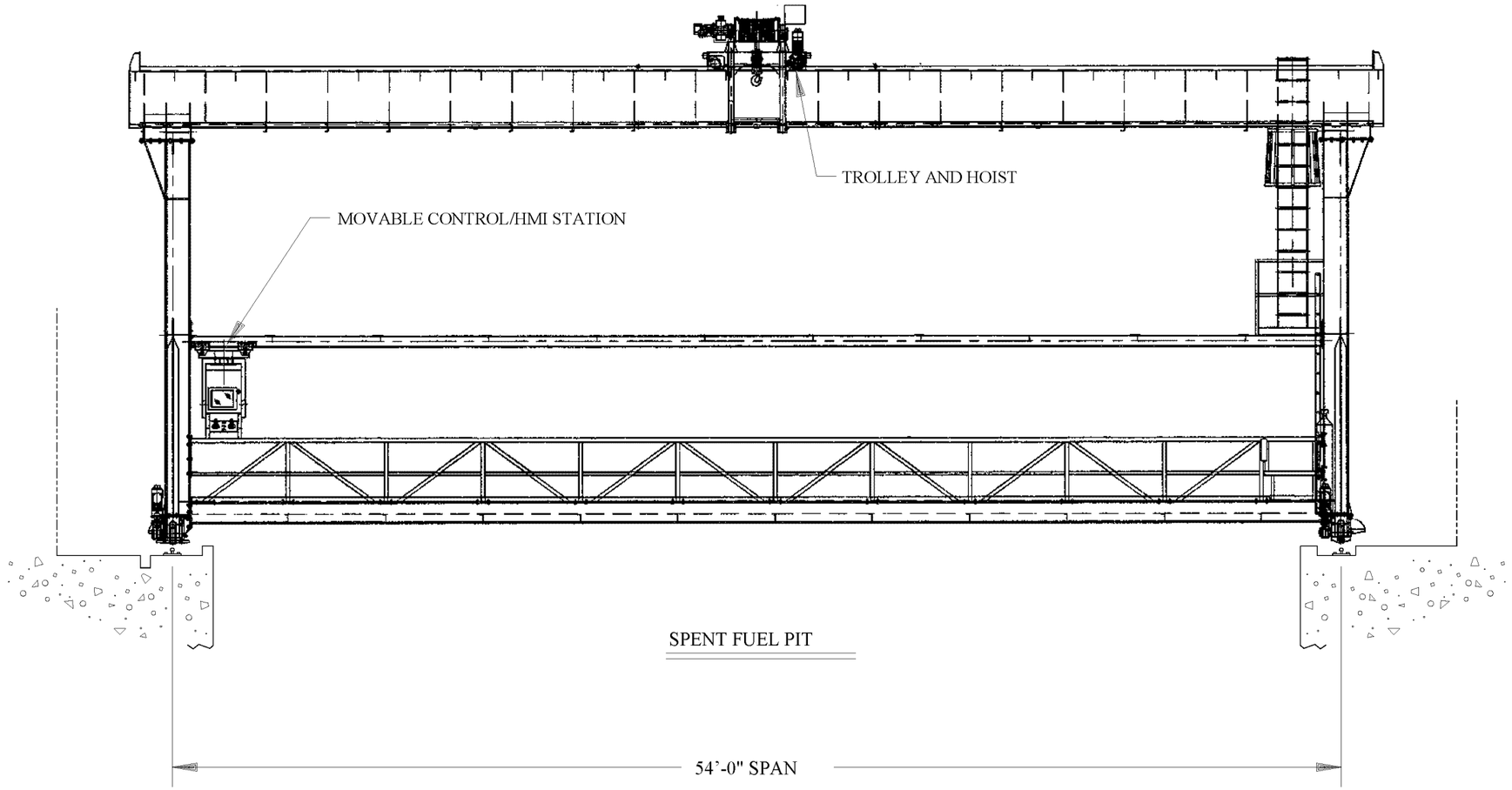

Amendment 104

COMANCHE PEAK N P P

FINAL SAFETY ANALYSIS REPORT

UNITS 1 AND 2

FUEL HANDLING
BRIDGE CRANE

FIGURE 9.1-4

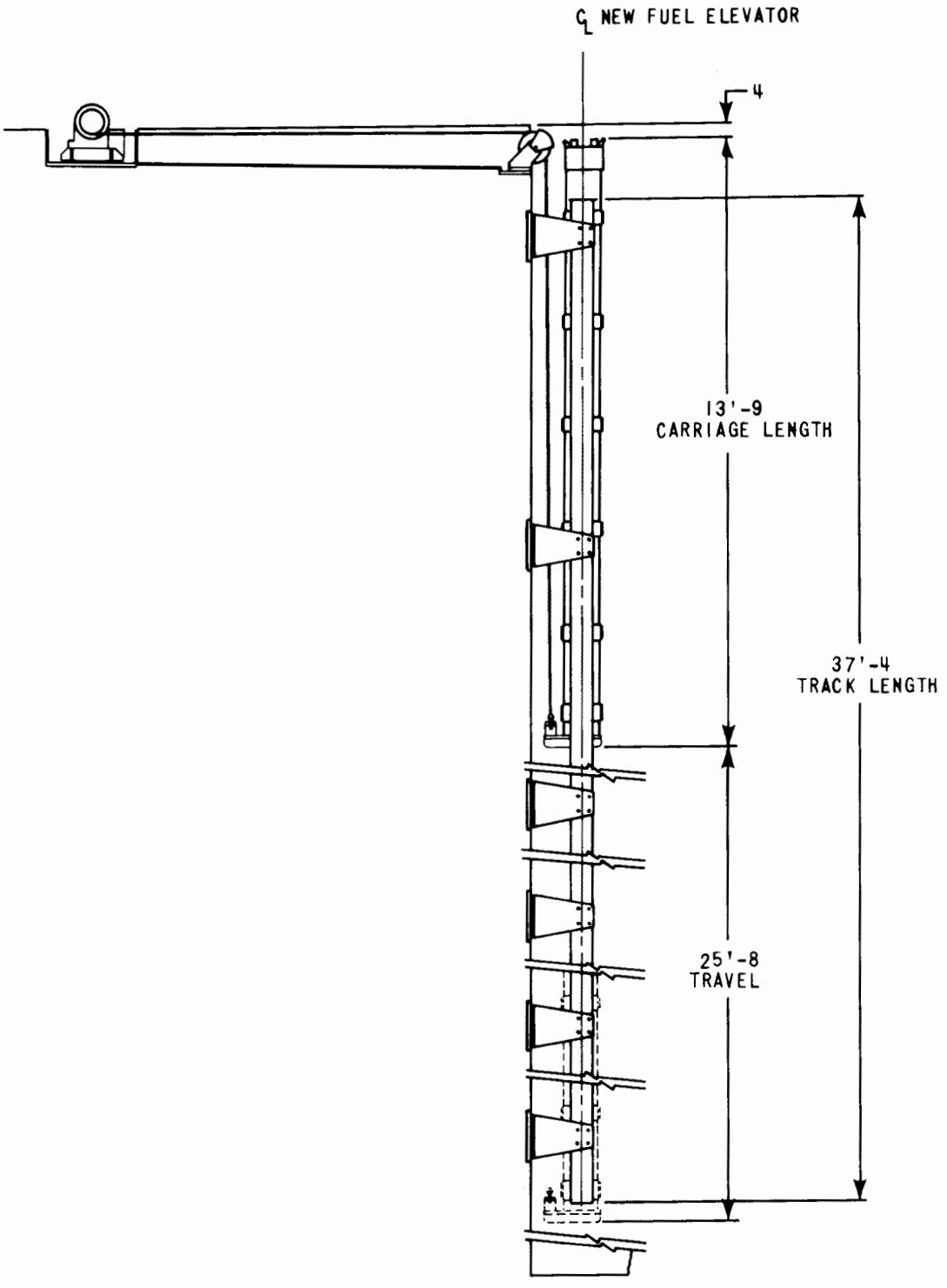

COMANCHE PEAK S.E.S.
FINAL SAFETY ANALYSIS REPORT
UNITS 1 and 2

New Fuel Elevator

FIGURE 9.1-5

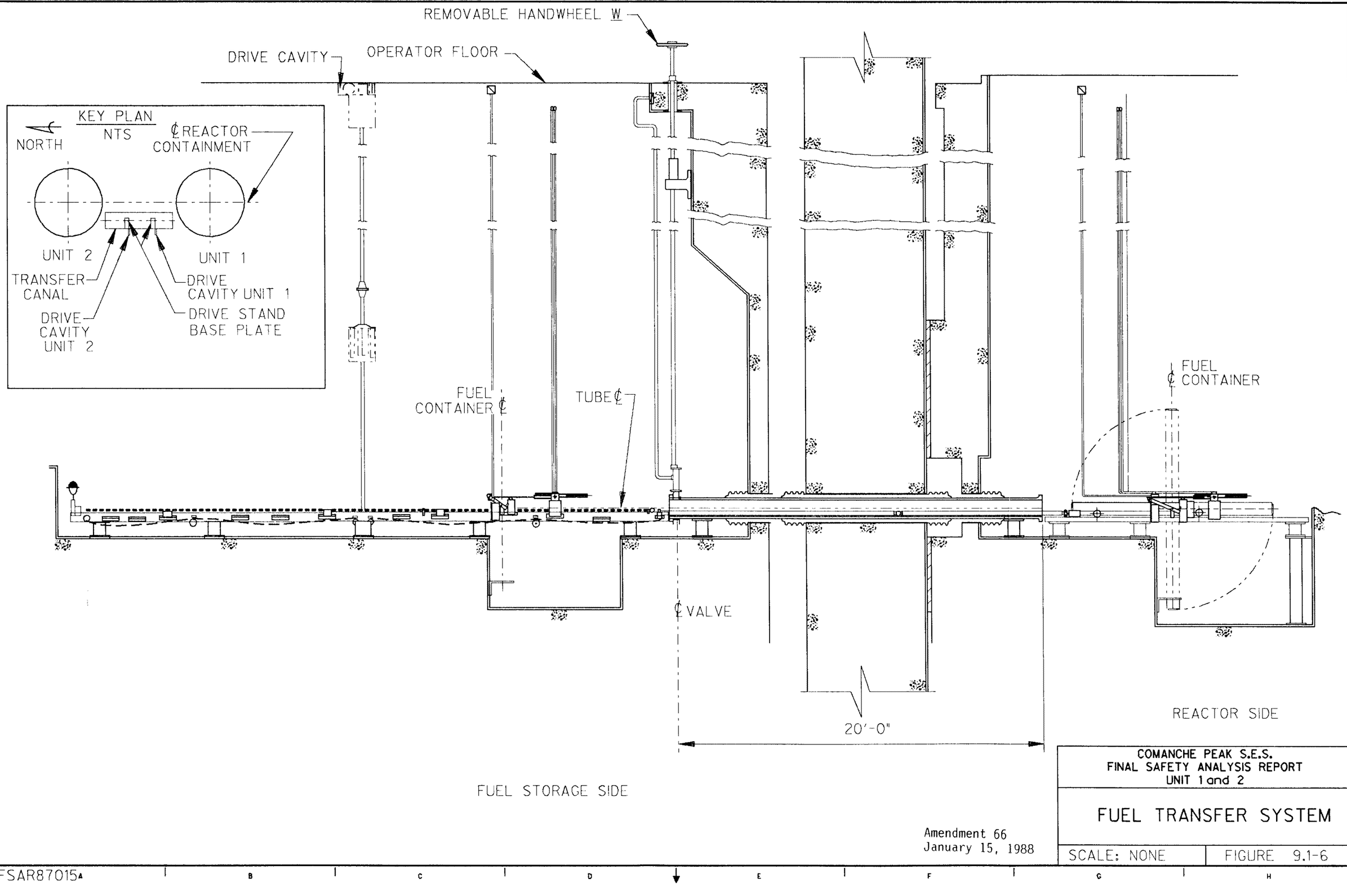

COMANCHE PEAK S.E.S.
FINAL SAFETY ANALYSIS REPORT
UNIT 1 and 2

FUEL TRANSFER SYSTEM

SCALE: NONE | FIGURE 9.1-6

Amendment 66
January 15, 1988

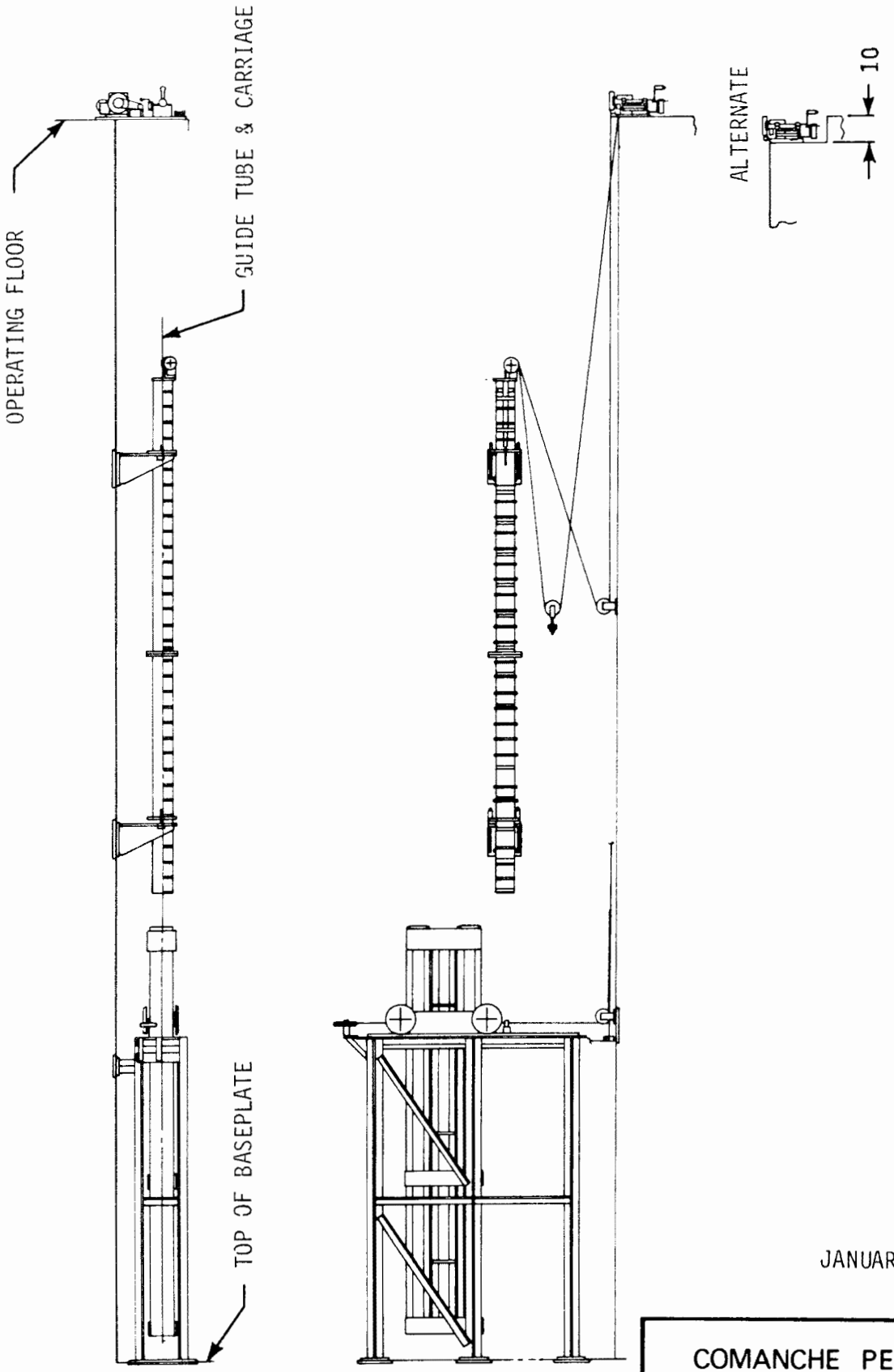

JANUARY 30, 1981

COMANCHE PEAK S.E.S.
FINAL SAFETY ANALYSIS REPORT
UNITS 1 and 2

Rod Cluster Control
Changing Fixture

FIGURE 3.1-7

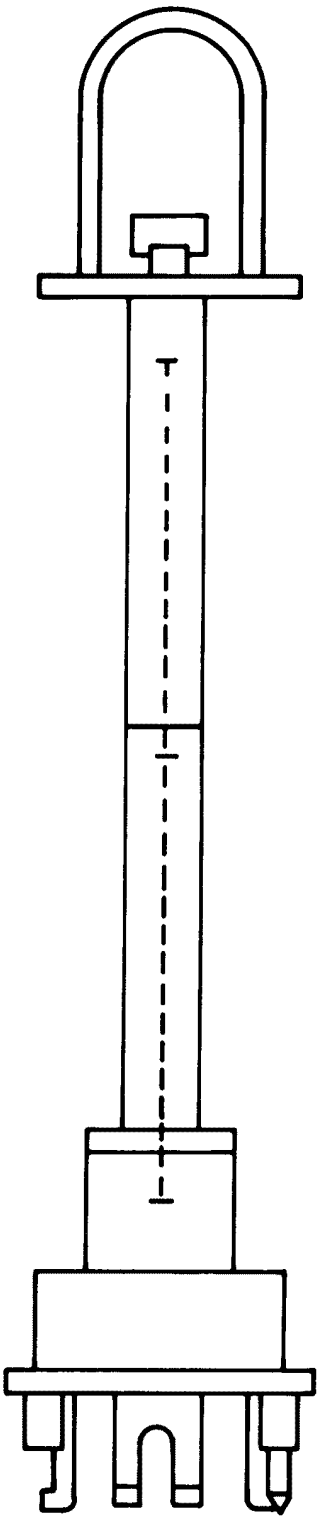

COMANCHE PEAK S.E.S.
FINAL SAFETY ANALYSIS REPORT
UNITS 1 and 2

Spent Fuel Handling Tool

FIGURE **9.1-8**

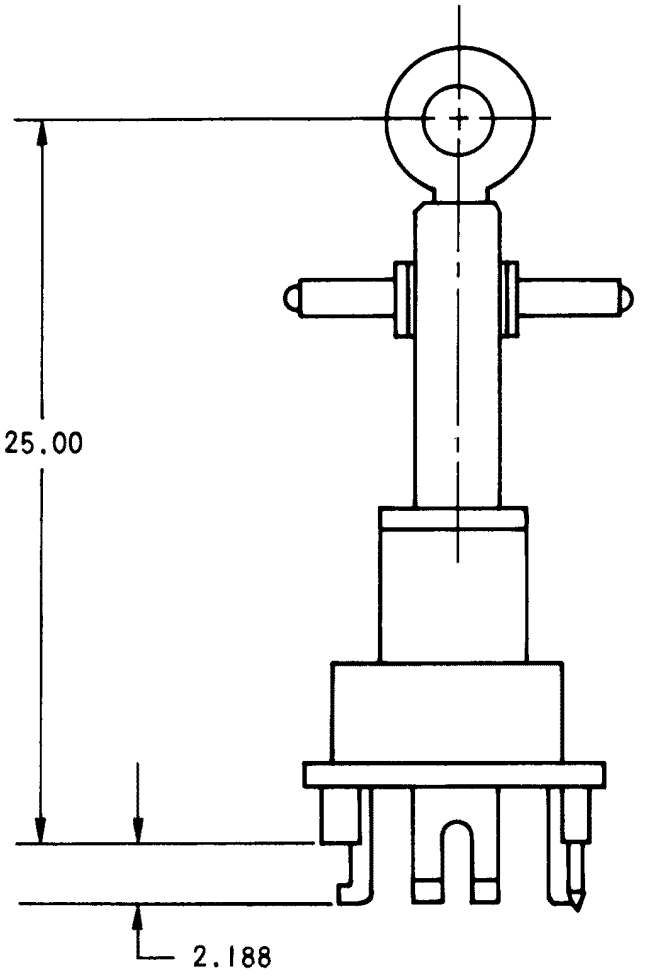

COMANCHE PEAK S.E.S.
FINAL SAFETY ANALYSIS REPORT
UNITS 1 and 2

New Fuel Handling Tool

FIGURE 9.1- 9

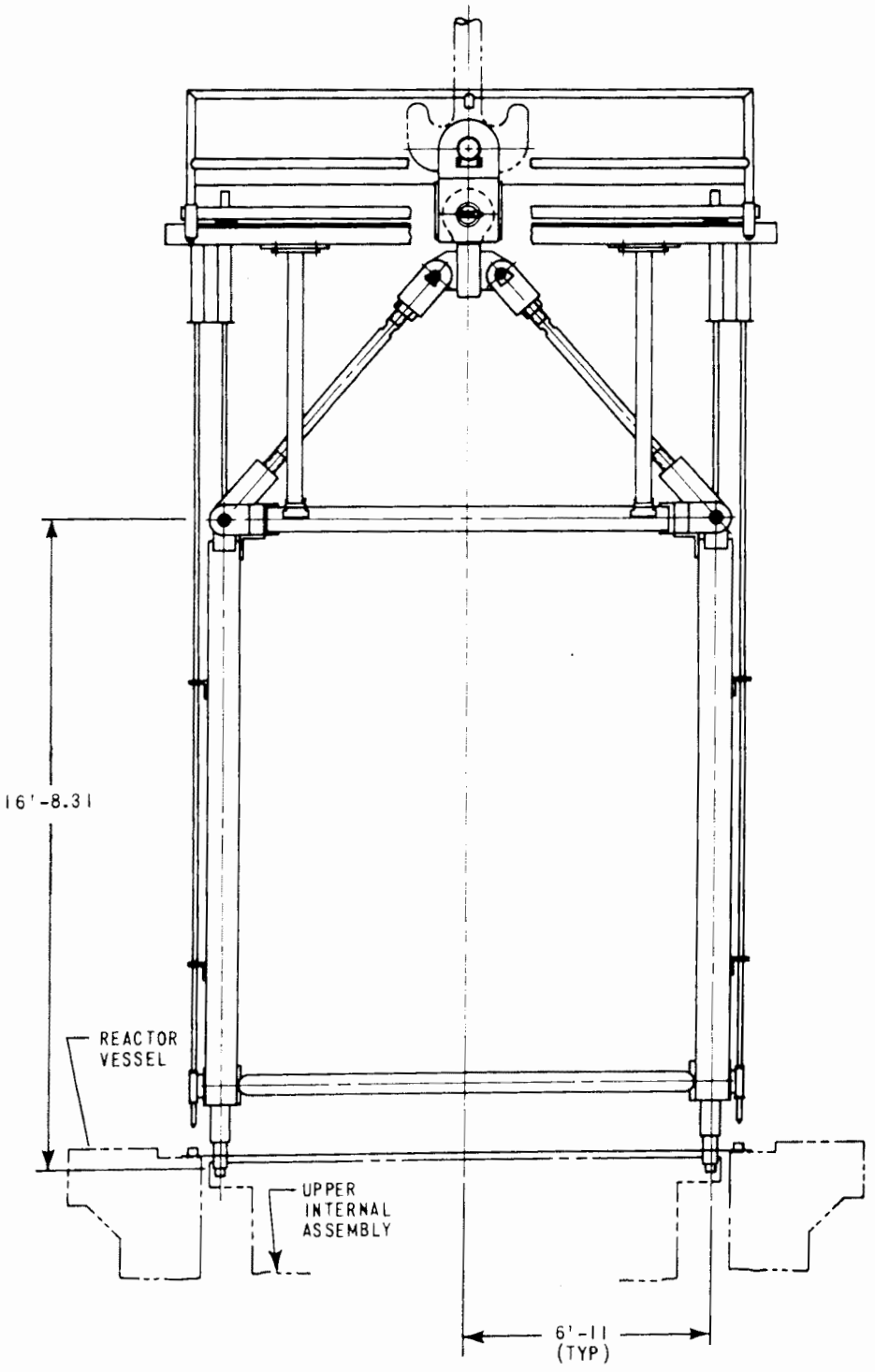

COMANCHE PEAK S.E.S.
FINAL SAFETY ANALYSIS REPORT
UNITS 1 and 2

Upper Core Barrel Handling Fixture

FIGURE 9.1-10

AMENDMENT 13
DECEMBER 15, 1980

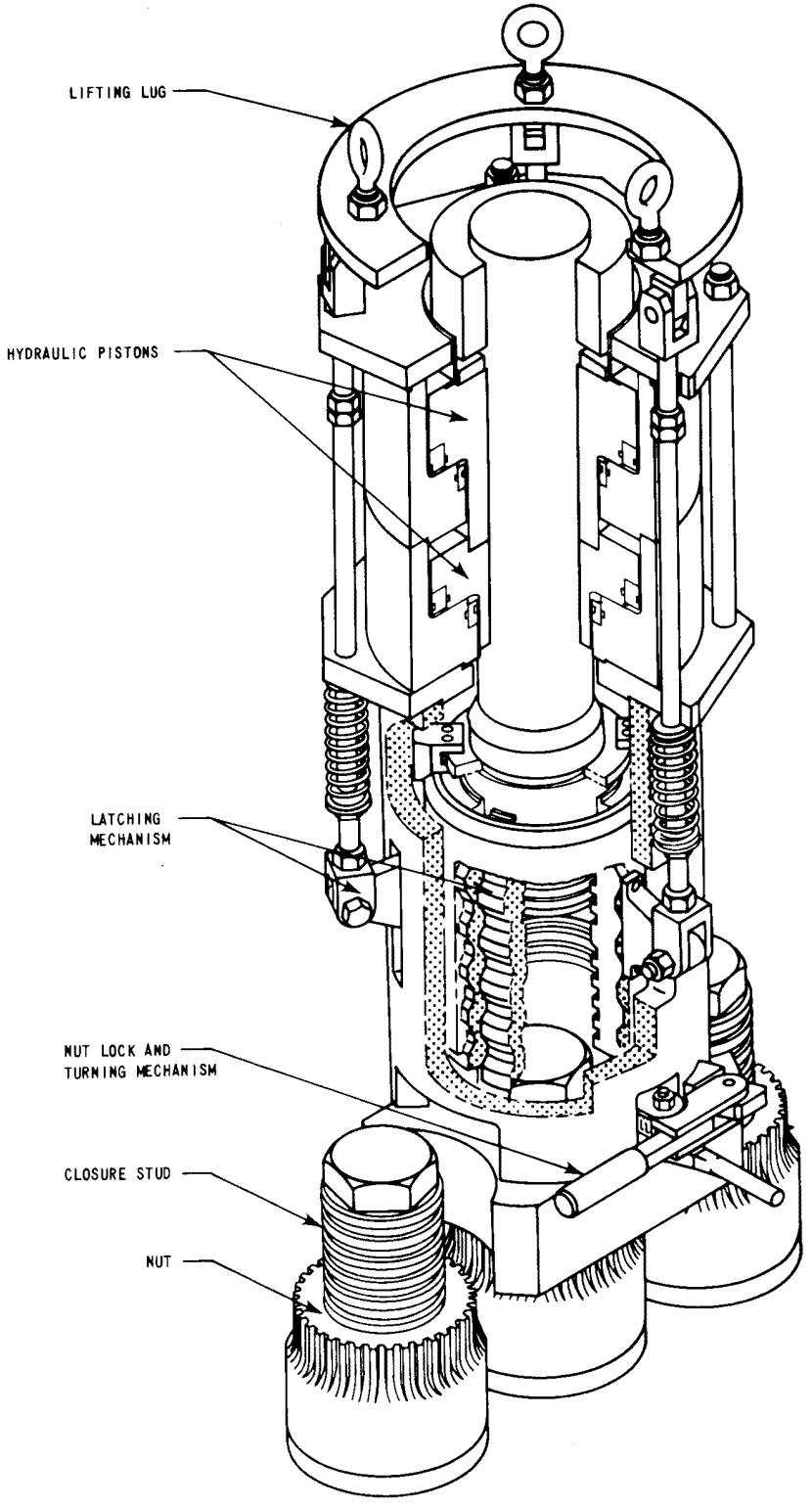

11.946-9

COMANCHE PEAK S.E.S.
FINAL SAFETY ANALYSIS REPORT
UNITS 1 and 2

Stud Tensioner

FIGURE 9.1-11

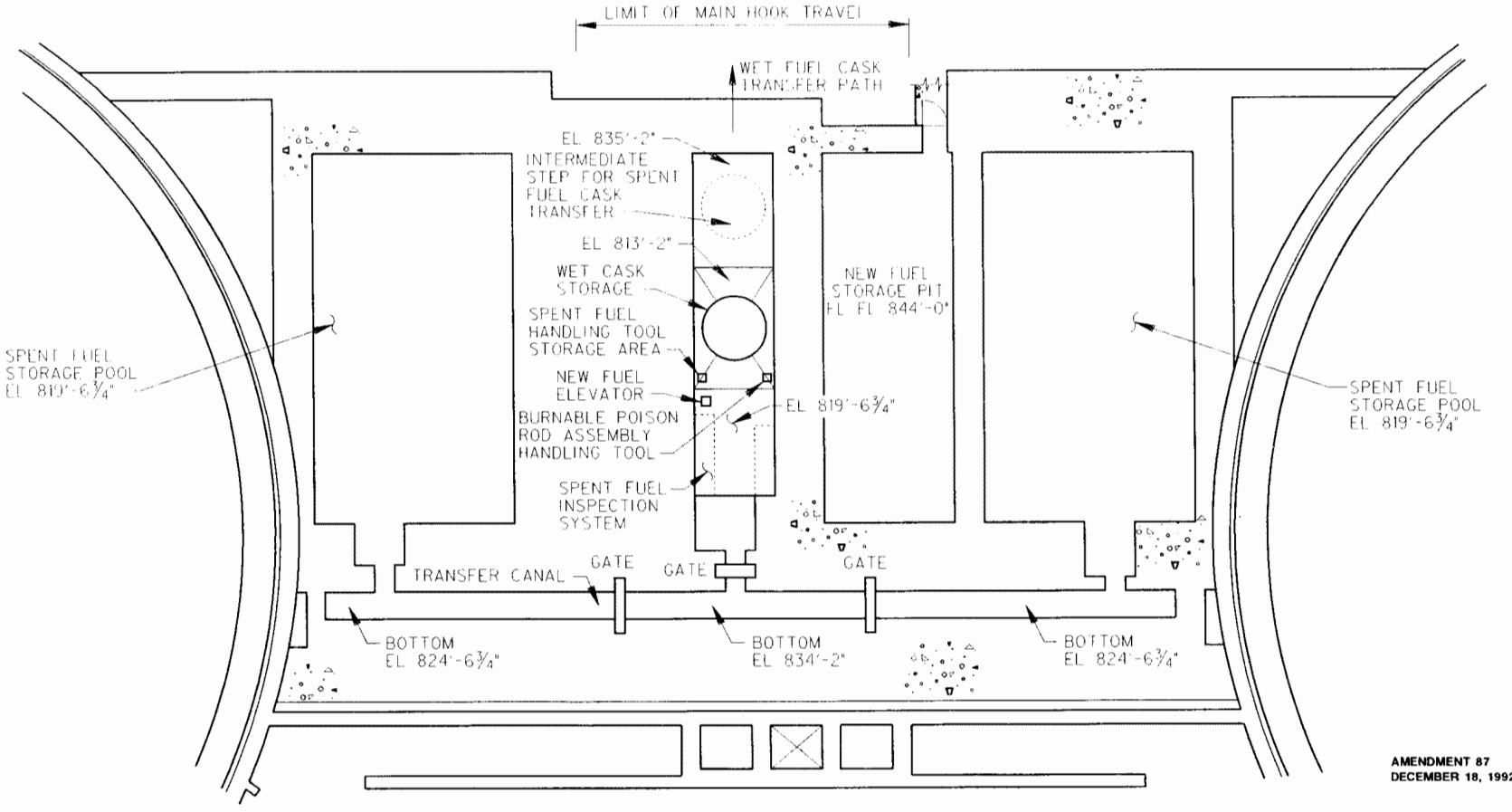

AMENDMENT 87
DECEMBER 18, 1992

COMANCHE PEAK S E S
FINAL SAFETY ANALYSIS REPORT
UNITS 1 AND 2

SPENT FUEL CASK
LOADING AREA

FIGURE 9.1-12

FSAR91120.DGN

REV	DWN	CHKD	APVD	REMARKS
CP-23	MM 02-22 2013			THIS DRAWING REVISED TO INCORPORATE AN EDITORIAL CHANGE PER A1-CR-2013-001650-1.

NOTES:

1. FOR MECHANICAL SYMBOLS AND NOTES SEE DRAWING M1-0200.
2. (X-PI-4867 AND X-PI-4868) ARE ABANDONED IN PLACE.
3. ALL PIPING TO THE SPENT FUEL POOL HEAT EXCHANGER SHELL IS SHOWN ON THE COMPONENT COOLING WATER FLOW DIAGRAM.
4. CAPS WILL NOT BE PROVIDED ON VENT AND DRAIN LINES.
5. PIPING WAS ORIGINALLY SUPPLIED BY VENDOR AND DAMAGED. PIPING IS NOW FIELD SUPPLIED FOR PUMPS CPX-SFAPSF-01 AND CPX-SFAPSF-02 .

FSAR FIGURE 9.1-13

THIS DRAWING CREATED ELECTRONICALLY

CLASS I
(NUCLEAR SAFETY-RELATED)
SAFETY CLASS 1 — SEISMIC CATEGORY I
SAFETY CLASS 2 — CLASS 1E ASSOCIATED CIRCUITS
SAFETY CLASS 3

LUMINANT
CPNPP
GLEN ROSE, TEXAS

FLOW DIAGRAM
SPENT FUEL POOL COOLING
AND CLEAN-UP SYSTEM

DWG. NO.	SH. NO.	REV.
M1-0235	-	CP-23

$$$$$$$DATE$$$$$$

me923700.dgn M1-0235 < FINAL PRINT >

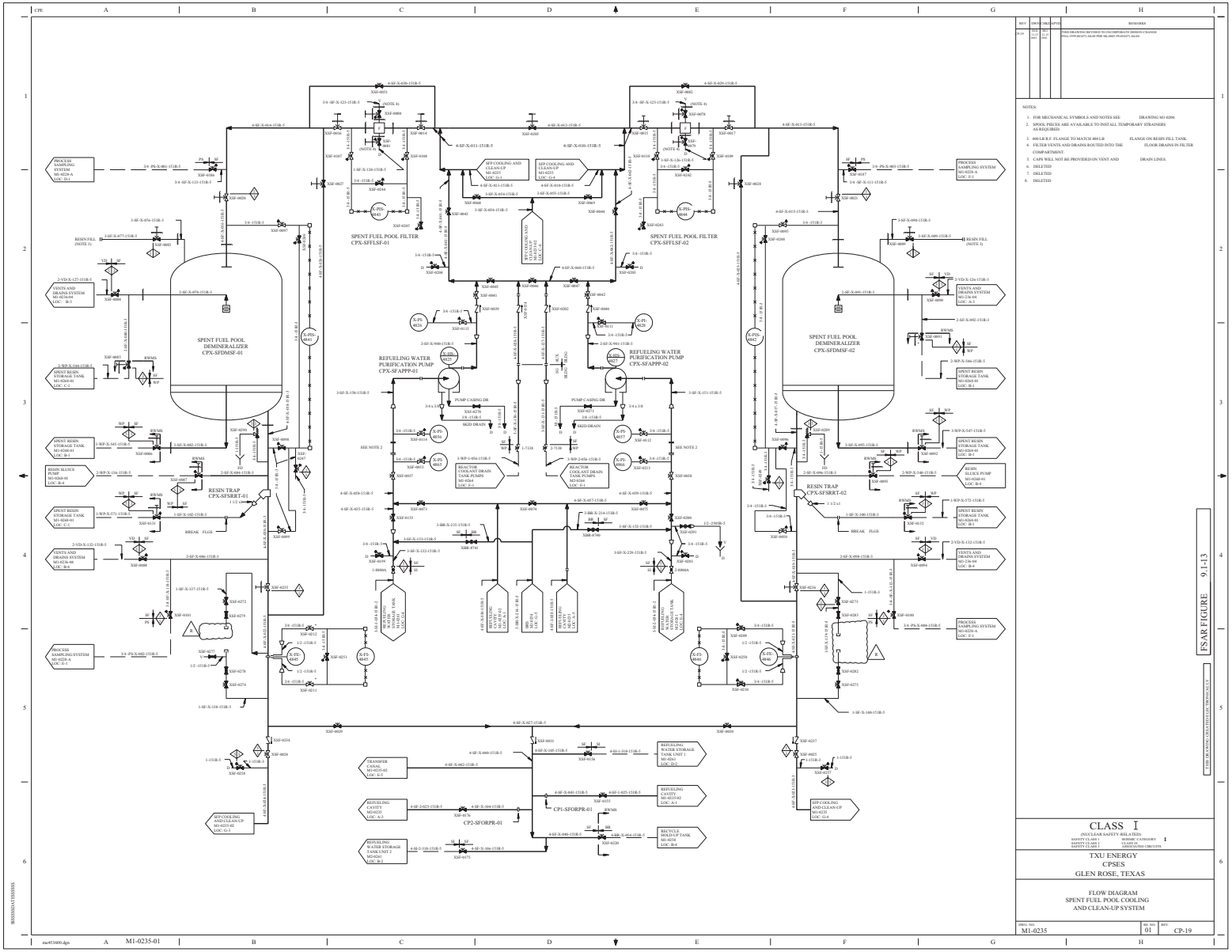
SPENT FUEL POOL DEMINERALIZER CPX-SFDMSF-01
SPENT FUEL POOL DEMINERALIZER CPX-SFDMSF-02
SPENT FUEL POOL FILTER CPX-SFFLSF-01
SPENT FUEL POOL FILTER CPX-SFFLSF-02
REFUELING WATER PURIFICATION PUMP CPX-SFAPPP-01
REFUELING WATER PURIFICATION PUMP CPX-SFAPPP-02
RESIN TRAP CPX-SFSRRT-01
RESIN TRAP CPX-SFSRRT-02
SFP COOLING AND CLEAN-UP M1-0233 LOC: G-1
SFP COOLING AND CLEAN-UP M1-0235 LOC: G-4
SFP COOLING AND CLEAN-UP M1-0233-02 LOC: G-3
SFP COOLING AND CLEAN-UP M1-0235-02 LOC: G-5
REACTOR COOLANT DRAIN TANK PUMPS M2-0264 LOC: F-1
PROCESS SAMPLING SYSTEM M1-0228-A LOC: F-1
VENTS AND DRAINS SYSTEM M1-0236-04 LOC: B-4
VENTS AND DRAINS SYSTEM M1-0228-01 LOC: A-3
SPENT RESIN STORAGE TANK M1-0240-01 LOC: C-1
SPENT RESIN STORAGE TANK M1-0240-01 LOC: B-1
SPENT RESIN STORAGE TANK M1-0240-01 LOC: C-1
RESIN SLUICE PUMP M1-0240-01 LOC: B-4
REFUELING CAVITY M1-0235-02 LOC: A-1
REFUELING CAVITY M1-0235-02 LOC: A-3
REFUELING WATER STORAGE TANK UNIT 1 M1-0261 LOC: D-3
REFUELING WATER STORAGE TANK UNIT 2 M1-0262 LOC: B-3
TRANSFER CANAL M1-0235-02 LOC: E-5
RECYCLE FUEL POOL TANK M1-0270 LOC: B-4
CP1-SFORPR-01
CP2-SFORPR-01
BREAK FLGS
BREAK FLGS
BREAK FLGS
BREAK FLGS
SEE NOTE 2
SEE NOTE 2
RESIN FILL (NOTE 3)
RESIN FILL (NOTE 3)
PUMP CASING DR
PUMP CASING DR
SKID DRAIN
SKID DRAIN
TO TCB
TO TCB
FROM REACTOR BLDG
FROM REACTOR BLDG
1/2 x 2.5
1/2 x 1
1/2 x 1
1/2 x 2.5
1/2 x 2.5
1/2 x 2.5

REV	DWN	CHKD	APVD	REMARKS
CP-25	DLK 10-29-2013			THIS DRAWING REVISED TO INCORPORATE AI-CR-2013-008850-1 TO EDITORIALLY CORRECT NOTE 7 AT VALVE XSF-0077 TO INDICATE NOTE 9.

NOTES:

1. FOR MECHANICAL SYMBOLS AND NOTES SEE DRAWING M1-0200.
2. TEMPORARY STRAINERS ARE INSTALLED IN SPOOL PIECES DURING INITIAL FLUSHING OPERATIONS STRAINERS AND TEMPORARY PRESSURE GAUGES ARE REMOVED PRIOR TO SYSTEM START-UP.
3. LOCATE □ INCH HOLE IN PIPE 1'-0" BELOW NORMAL WATER LEVEL.
4. SPARGER LOCATED 6 FEET ABOVE FUEL ASSEMBLIES.
5. LOCATE □ INCH HOLE IN PIPE 1'-0" BELOW NORMAL WATER LEVEL.
6. LOCK OPEN IN MODES 1-4.
7. FILTER VENTS ARE DRAINS ROUTED INTO THE FLOOR DRAINS IN FILTER COMPARTMENT.
8. CAPS WILL NOT BE PROVIDED ON VENTS AND DRAINS LINES.
9. VALVES ARE VAL-MATIC CO 3"-125 LB MODEL 1903 SURE SEAL FOOT VALVES ALL 304 SS CONSTRUCTION WITH NEOPRENE SEAL RING.
10. THE TRANSFER CANAL LIFT GATE (CPX-SFHAGT-03) IS NORMALLY STORED IN THE WET CASK LOADING PIT, BUT CAN BE USED IN ANY OF THE THREE LOCATIONS IN THE FUEL TRANSFER CANAL. THIS IS A REMOVABLE TYPE GATE.
11. ANTISIPHON DEVICES LOCATED ON SUCTION LINES TO SKIMMER PUMP. INLET TO ANTISIPHON DEVICE IS ONE FOOT BELOW SUCTION LINE.
12. WHEN A GATE IS IN POSITION, THE WATER LEVEL ON EITHER SIDE OF THE GATE MAY VARY.
13. THE REFUELING CAVITY LIFT GATE (CP1-SFHAGT-01) IS NORMALLY STORED IN A LOCAL RACK. THIS IS A REMOVABLE TYPE GATE.
14. CAUTION: CONSULT APPLICABLE BRP'S FOR PHYSICAL LAYOUT, ARRANGEMENT OF PIPING ENTERING, EXITING SPENT FUEL POOLS.
15. CAVITY DRAIN PIPE SHALL NOT BE REDUCED TO LESS THAN 4" DURING POWER OPERATION. THIS IS NEEDED TO MAINTAIN CAVITY DRAINAGE DURING AN ACCIDENT SCENARIO, REFER TO FDA 2005-003364-14.

FSAR FIGURE 9.1-13

THIS DRAWING CREATED ELECTRONICALLY

CLASS I
(NUCLEAR SAFETY-RELATED)
SAFETY CLASS 1 — SEISMIC CATEGORY I
SAFETY CLASS 2 — CLASS 1E
SAFETY CLASS 3 — ASSOCIATED CIRCUITS

LUMINANT
CPNPP
GLEN ROSE, TEXAS

FLOW DIAGRAM
SPENT FUEL POOL COOLING
AND CLEAN-UP SYSTEM

DWG. NO. M1-0235 | SH. NO. 02 | REV. CP-25

$$$$$$$DATE$$$$$$$ REF CKD CP-19 1 20/98

me101920.dgn A M1-0235-02 < FINAL PRINT >

REV	DWN	CHKD	APVD	REMARKS
CP-17	BMC 10-20-2014	RMG 10-22-2014		THIS DRAWING REVISED TO INCORPORATE DESIGN CHANGE FDA-2014-000244-01-00 PER SK-0001-14-000244-01-00.

NOTES:

1. FOR MECHANICAL SYMBOLS AND NOTES SEE DRAWING M1-0200.
2. VALVE TYPE PER QC WALKDOWN VERIFICATION.
3. LOCK OPEN IN MODES 1-4.
4. WHEN THE GATE IS IN POSITION, THE WATER LEVEL ON EITHER SIDE OF THE GATE MAY VARY. CP2-SFHAGT-01 IS NORMALLY STORED IN A LOCAL RACK. THIS IS REMOVABLE TYPE GATE.
5. CAVITY DRAIN PIPE SHALL NOT BE REDUCED TO LESS THAN 4" DURING POWER OPERATION. THIS IS NEEDED TO MAINTAIN CAVITY DRAINAGE DURING AN ACCIDENT SCENARIO, REFER TO FDA 2005-003364-04.

OUTSIDE CONTAINMENT | INSIDE UNIT 2 CONTAINMENT

SPENT FUEL POOL SKIMMER FILTER M1-0235-02 LOC: G-2

3-SF-2-027-151R-5

□-151R-5 — SEE NOTE 2 — 2SF-0057 (V)

□-151R-5 — 2SF-0042 (TD)

2SF-0056 (LC) — CP -16

PENETRATION 2-MIII-0031 — 3-SF-2-011-151R-2 — 2SF-0055 (LC)

TD □-151R-5 — 2SF-0046

3-SF-2-010-151R-5

4-SF-2-025-151R-5 — PURIFICATION LOOP M1-0235-01 LOC: C-6 — 4-SF-2-013-151R-5 — 2SF-0037

□-151R-5 — SEE NOTE 2 — 2SF-0052 (D)

AUX BLDG | SG BLDG

2SF-0011 (LC) — 2SF-0047 (TD) — □-151R-5

PENETRATION 2-MIII-0016 — 4-SF-2-014-151R-2 — 2SF-0012 (LC)

TC □-151R-5 — 2SF-0043

4-SF-2-016-151R-5

3-SF-2-015-151R-5

3-SF-2-012-151R-5 — SPENT FUEL POOL SKIMMER FILTER M1-0235-02 LOC: A-5 — 2SF-0051 — 2SF-0010

2-LS-4871 | 2-TE-4872 | 2SF-0013 | 2SF-0050 | 2-LS-4873 | 2-TE-4874

NORMAL WATER LEVEL EL 858'-6"

SKIMMER CP2-SFSKRS-02

SKIMMER CP2-SFSKRS-01

REFUELING CAVITY SKIMMER STRAINER CP2-SFSRSP-01

2SF-0048

2SF-0016 — □-151R-5 — 2SF-0032 — SEE NOTE 2 — 2-PI-4870

2-HS-4869

1□-151R-5 — SEE NOTE 2

1-151R-5

REFUELING CAVITY SKIMMER PUMP CP2-SFAPRS-01

3-SF-2-008-151R-5 — 3-SF-2-009-151R-5 — 2SF-0014 — 2SF-0015

1□x1 — 1-SF-2-015IR-2 — 2SF-0031 — 1-VD-2-144-151R-5

2SF-0049 — VALVE BY INST (D)

VENTS AND DRAINS M2-0238 LOC: F-6

CP2-SFHAGT-01 (LIFT GATE) SEE NOTE 4

FLEXIBLE HOSE

1□-151R-5 — 2-SF-2-007-151R-5 — 1□-151R-5 — 2-SF-2-006-151R-5

2-SF-2-029-151R-3 (SEAL RING DRAIN)

4-SF-2-026-151R-3

UNIT 2 REFUELING CAVITY

RV

DEBRIS SCREEN CP2-SFSRDS-03

DEBRIS SCREEN CP2-SFSRDS-04

DRAIN STRAINER CP2-SFSRDS-02

BY VENDOR — VALVE 2SF-0001

FUEL TRANSFER TUBE TCX-FHSTTT-01

CP2-FHEXTT-01 — CP2-FHEXTT-03

CP2-FHEXTT-04 — CP2-FHEXTT-02

BLIND FLG

TC □-2505-2 — □-2505-5 — 2SF-0053

DRAIN STRAINER CP2-SFSRDS-01

4-SF-2-021-151R-3

ARCHITECTURE DRAIN TO LOOP ROOM 3 — 6" SS

ARCHITECTURE DRAIN TO LOOP ROOM 4 — 6" SS

4-SF-2-023-15IR-3 — 4-SF-2-024-15IR-5 — 4-SF-2-022-15IR-5

4-SF-2-017-151R-3

4-SF-2-018-151R-3

2SF-0025 — 2SF-0026 — 2SF-0019 — 2SF-0020

4-SF-2-003-151R-5

SF WP — 2-7129

REACT. COOLANT DRAIN TK PUMPS M2-0264 LOC: A-6 — 4-WP-2-028-151R-5

2SF-0027 LO — SEE NOTE 3 — 4-SF-2-020-15IR-5 SEE NOTE 5

2SF-0028 LO — SEE NOTE 3 — 4-SF-2-019-15IR-5 SEE NOTE 5

DRAIN TO CONTAINMENT FLOOR EL 808'-0" DRIP PAN DURING NORMAL OPERATION FLOOR DRAIN LINE 4-FD-2-014-150R-5

REFUELING WATER PURIFICATION PUMP M1-0235-01 LOC: D-4

4-SF-2-028-151R-5 — TV □-151R-5 — 2SF-0044

PENETRATION 2-MIII-0027 — 4-SF-2-005-151R-2 — 2SF-0022 (LC) — 2SF-0021 (LC)

TD □-151R-5 — 2SF-0045

4-SF-2-004-151R-5

FSAR FIGURE 9.1-13

THIS DRAWING CREATED ELECTRONICALLY

CLASS I
(NUCLEAR SAFETY-RELATED)
SAFETY CLASS 1 — SEISMIC CATEGORY I
SAFETY CLASS 2 — CLASS 1E
SAFETY CLASS 3 — ASSOCIATED CIRCUITS

LUMINANT
CPNPP
GLEN ROSE, TEXAS

FLOW DIAGRAM
SPENT FUEL POOL COOLING
AND CLEAN-UP SYSTEM

DWG. NO.	SH. NO.	REV.
M2-0235	-	CP-17

$$$$$$$DATE$$$$$$$

me101930.dgn — M2-0235 — < FINAL PRINT >

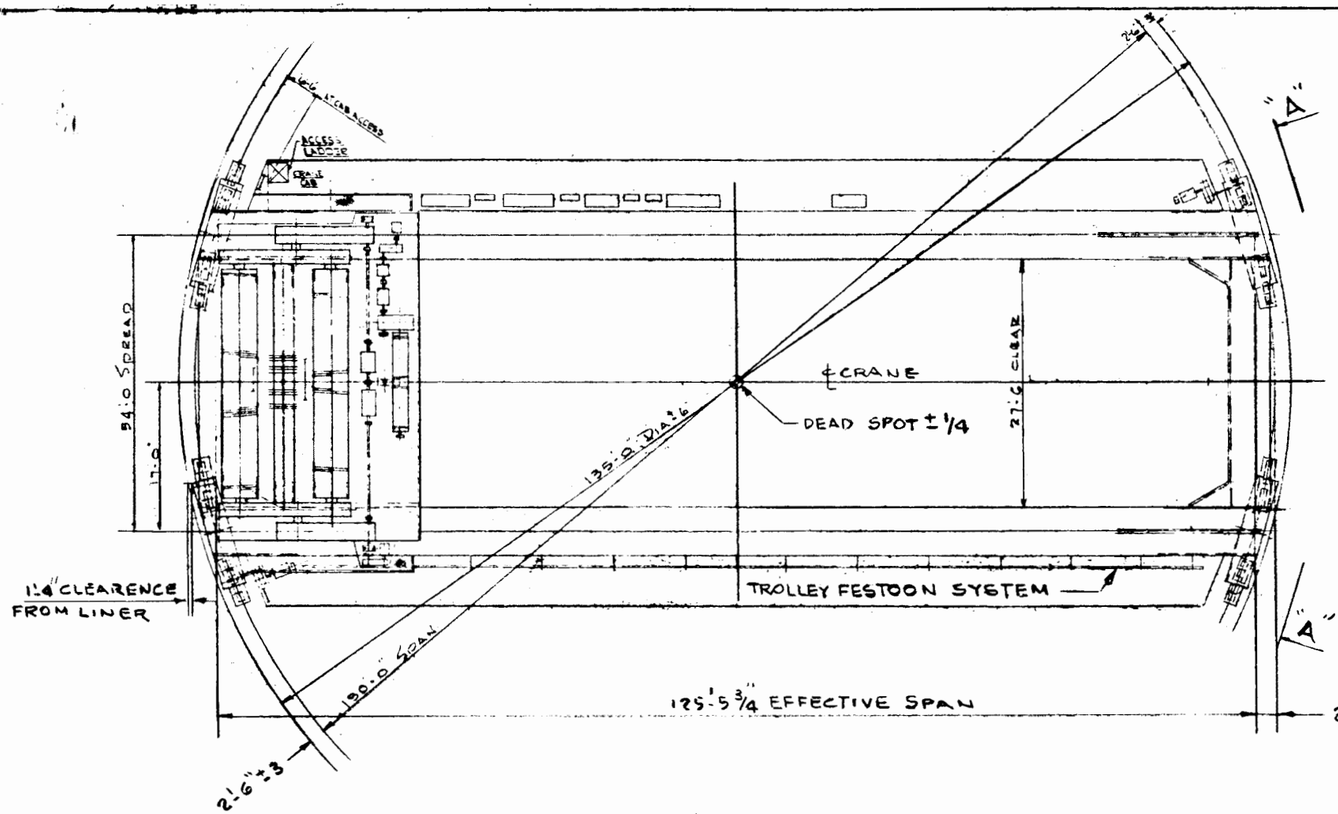

REFERENCE DWG
GIBBS & HILL, INC. XB-2323-M-203

BRIDGE WGT: 593,500#
TROLLEY WGT: 416,500#
ELECTRICAL: 16,000#
CRANE WGT: 1,026,000#
MAX. WHEEL LOAD: 64.3 TON (NO IMPACT) PLANT LIFE
MAX. WHEEL LOAD: 99.7 TON (NO IMPACT) CONSTRUCTION LIFT
OPER. VOLTAGE: 460 VOLT / 3 / 60 AC

MAX. VERTICAL & HORIZONTAL SEISMIC WHEEL LOADS ACTING SIMULTANEOUSLY
ONE-HALF SSE: 146.7 TON MAX VERTICAL W/ 22.4 TON HORIZONTAL SIMULTANEOUS
56 TON MAX HORIZONTAL W/ 89 TON VERTICAL "
FULL SSE: 114 TON MAX VERTICAL W/ 34.4 TON HORIZONTAL "
97 TON MAX HORIZONTAL W/ 91.4 TON VERTICAL "

CRANE TO BE DESIGNED TO REMAIN ON RAILS DURING DIAMETRAL EXPANSION OF CONTAINMENT
MAX. UPLIFT CORNER DESIGN LOAD-½ SSE = 73 TON
MAX UPLIFT CORNER DESIGN LOAD-FULL SSE = 109 TON

NOTE: SEISMIC LOADS APPLY TO ANY INDIVIDUAL CORNER AND NOT ALL FOUR SIMULTANEOUS

KRANCO INC. REF DWG. No. 7524-CL-1

OCTOBER 8, 1980

COMANCHE PEAK S.E.S.
FINAL SAFETY ANALYSIS REPORT
UNITS 1 and 2

CONTAINMENT POLAR CRANE

FIGURE 9.1-14 (SH 1 OF 3)

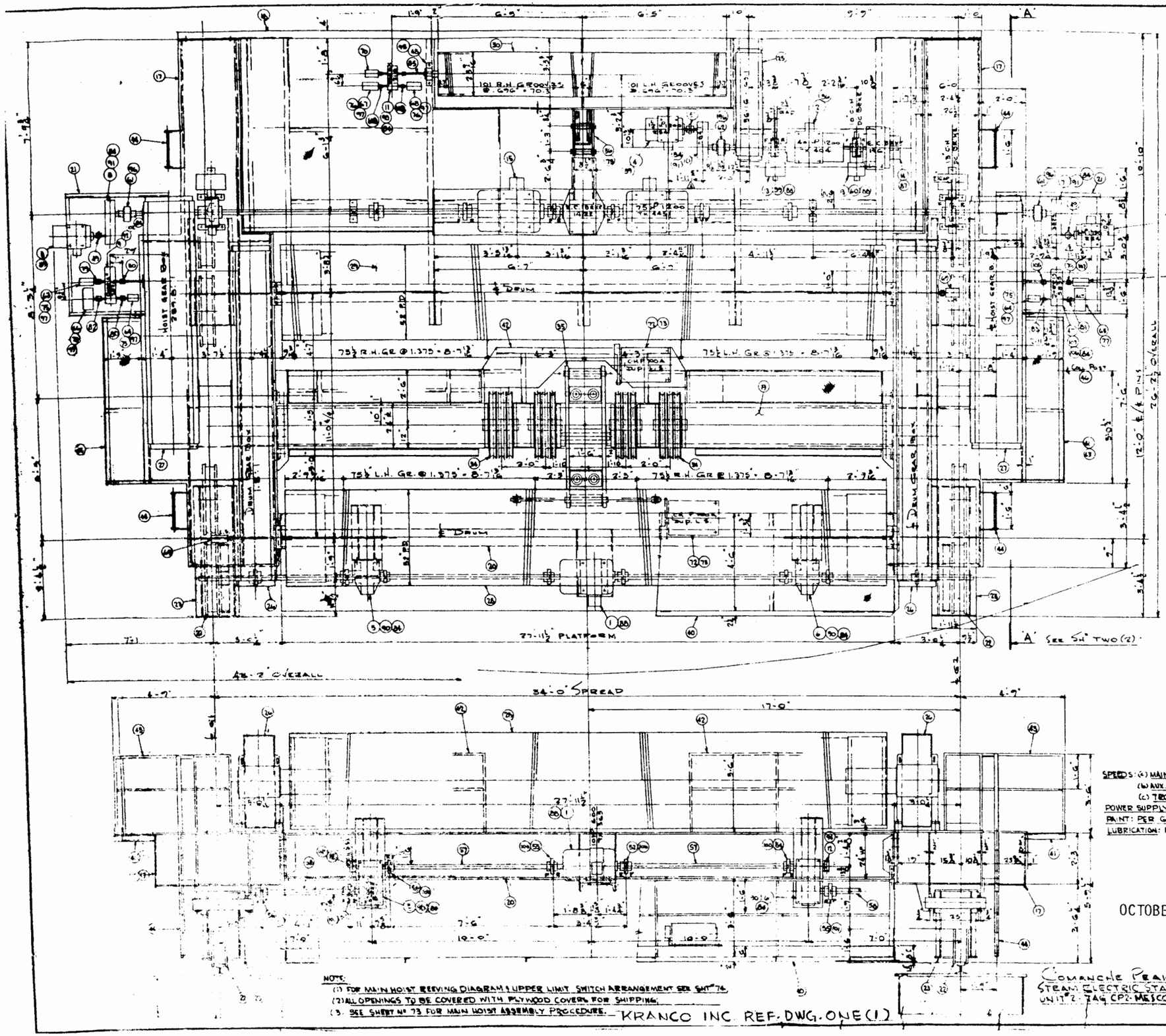

MATERIAL FOR 1 UNITS. 1 UNITS REQ'D PER CRANE 1 CRANES REQ'D.

ITEM	QTY PER UNIT	REF NO	DESCRIPTION	MATL	WGT	REMARKS
	1	MK-1A	TROLLEY ASSEMBLY	TOTAL	383,844	
1	1		GE MOTOR 10 HP, 600 RPM, FR. 365	-	840	✓
			460, 3/60, WOUND ROTOR, TYPE MR,		—	
			60 MIN, CL. H INSUL CL. B RISE,		—	
			50°C AMBIENT, TENV, DBL. STR SHAFT,		—	
			F1 CONDUIT BOX MTG & SPACE HEATER		—	
2	1		DITTO EXCEPT 40 HP, 1200 RPM	-	990	✓
			FR. 404		—	
3	2		GE MOTOR 5 HP, 1800 RPM, FR. 254	-	582	✓
			460, 3/60, WOUND ROTOR, TYPE M,		—	
			CONTINUOUS DUTY, CL. H INSUL,		—	
			CL. B RISE, 50°C AMBIENT, TEFC,		—	
			SINGLE STR SHAFT, F1 CONDUIT BOX		—	
			MTG & SPACE HEATER		—	
4	1		DITTO EXCEPT 12 HP, 1800 RPM, FR 254	-	276	✓
5	1		DORRIS RED" 6335 LH-DI (35.3 RED)	-	475	✓
6	1		DORRIS RED" 8388 RH-DI (35.3 RED)	-	475	✓
7	1		DORRIS RED" 3823 RH (22.8 RED)	-	201	✓
8	1		DORRIS RED" 3673 LH (22.8 RED)	-	221	✓
9	1		DORRIS RED" 2636 DI-DO (36.2 RED)	-	161	✓
10	1		DORRIS RED" 3841 RH (41.2 RED)	-	121	✓
11	1		DORRIS RED" 218 DI-DO (17.8 RED)	-	89	✓
12	2		CM S-5½ BRAKE" SIH1460-41 WITH	-	67	✓
			BRAKE WHEEL" SIH1160-7		—	
13	2		CM 10" & NEMA TYL OPERATED	-	526	✓
			BRAKE TYPE 505" 0 BRAKE WHL.		—	
14	1		GH MAGNETIC CRANE CONTROLLER	-	650	✓
			MODEL" 146" ALTERNATOR		—	
15	1	MK-60A	CONSTRICTION LIFT MACH. ASSY	-	7732	
16	1	MK-60B	PLANT LIFT MACHINERY ASSY	-	—	
17	1 LOT	MK-16A	TROLLEY SIDES	-	24,276	
18	1	MK-16A	AUX HOIST FRAME	-	4,383	
19	1	MK-16A	TROLLEY LOAD GIRT	-	26,915	
20	1	MK-19A	AUXILIARY GIRT	-	4,10	
21	1 LOT	MK-20A	MACHINERY SUPPORT	-	3,7	
22	4 OR 8	MK-10A	TROLLEY WHL ASSY (36" DIA)	-	20,368	
23	1 LOT	MK-12A	TROLLEY DRIVE TRUCK	-	4,127	
24	2	MK-13A	TROLLEY IDLE TRUCK	-	3,361	
25	1	36-16	KRANCO REDUCER (i=4985:1 RATIO)	-	2429	
26	1 LOT	36-90	KRANCO REDUCER (DRUM GEAR BOX)	-	49,774	
27	1 LOT	36-91	KRANCO REDUCER (HOIST GEAR BOX)	-	37,574	
28	1	MK-25A	MAIN HOIST DRUM	-	44,292	
29	1	MK-26A	MAIN HOIST DRUM	-	44,290	
30	1	MK-24A	AUX. HOIST DRUM	-	8,266	
31	1	MK-33A	KRANCO DUAL BOTTOM BLOCK	-	38,299	
33	1		JOHNSON BOTTOM BLOCK" 300 KIPS	-	617	✓
			RATED @ 20 TON GROOVE FOR 9/16" ROPE		—	
34	2	MK-52A	MAIN HOIST UPPER SHEAVE ASSY	-	12,592	
35	1	MK-49A	M.H. UPPER EQUALIZER BAR ASSY	-	3031	
36	1	MK-23A	AUX. HOIST UPPER SHEAVE ASSY	-	180	
37	2		1¼" PREFORMED PREMIUM WHYTE	-	47722	
			STRAND 7-FLEX IWRC WIRE		—	
			ROPE = 1163 FT. LG		—	
38	2		DITTO EXCEPT 1163 FT LG.	-	6835	✓
39	1		9/16" DIA 6 x 37 IPS-IWRC		706	✓
			WIRE ROPE = 1807 FT. LG		—	
40	1	MK-21A	TROLLEY PLATFORM	-	2,679	
41	2	MK-22A	TROLLEY SIDE PLATFORM	-	447	
42	1	MK-47A	TR LOAD GIRT PLATFORM & HANDRAIL	-	982	
43	1	MK-46A	TROLLEY HANDRAIL	-	499	
44	4	MK-48B	TROLLEY LADDERS	-	283	
45	2	MK-45A	TROLLEY SPRING BUMPERS	-	364	
46	1	MK-44A	TROLLEY COLLECTOR POST	-	516	
47	1		DORRIS RED" 5835 DI-DO (36.3 RED)	-	363	✓
			BILL OF MATERIAL CONT. ON SHT" 2			

SPEEDS: (a) MAIN HOIST - 37/.25 FPM, 5 SV/SS
(b) AUX. HOIST - 20/1 FPM, 5 SV/SS
(c) TROLLEY - 30 FPM 5 SV
POWER SUPPLY - 460/3/60 AC.
PAINT: PER GIBBS & HILL SPECIFICATION No 7328-QS-900 DATED AUG 27, 1974, REV" 1
LUBRICATION: PIPE LUBRICATION POINTS TO ONE ACCESSIBLE CENTRAL LOCATION ON THE TROLLEY (ACCESSIBLE FROM THE FRONT PLATFORM MK-43A)

OCTOBER 8, 1980

COMANCHE PEAK S.E.S.
FINAL SAFETY ANALYSIS REPORT
UNITS 1 and 2

CONTAINMENT POLAR CRANE

FIGURE 9.1-14 Sh. 2 of 3

ITEM	NO. REQ'D	REF. NO.	DESCRIPTION	MAT'L	WGT.	REMARKS
			MATERIAL CONT FROM SHT # 1			
48	1		PILLOW BLOCK-REX # 2207 (2 7/16")	-	15	✓
49	2	MK-62G	COUPLING-FALK # G20-15G	F/F	-	40
50	1	MK-62H	" -FALK # G20-15G	F/F	-	20
51	1	MK-62J	COUPLING-FALK # G20-15G	F/F	-	20

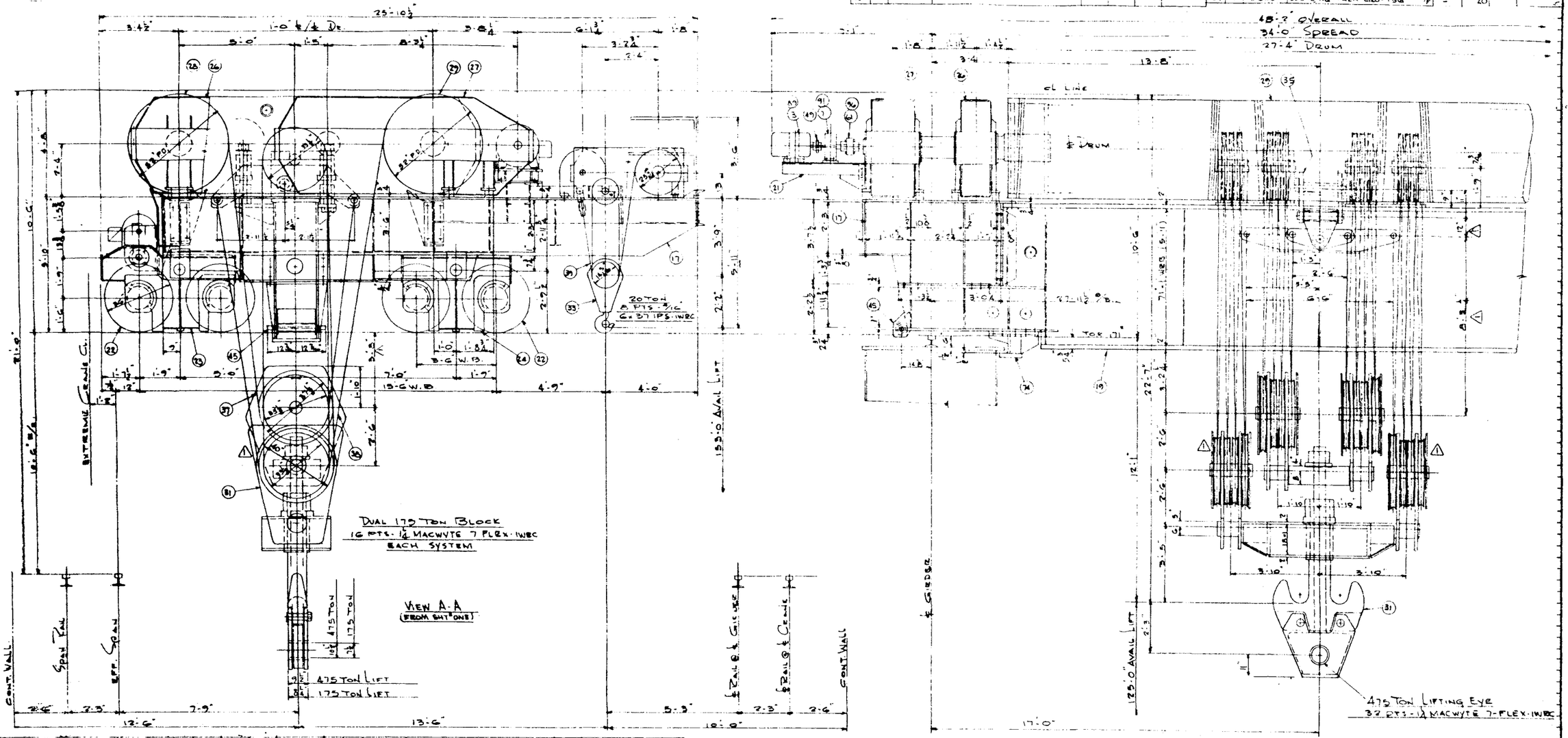

ITEM	NO. REQ'D	REF. NO.	DESCRIPTION	MAT'L	WGT.	REMARKS
101	4		KEY - 3/4" SQ. x 3 1/2" LG SQ ENDS	STOCK	5P	
100	4		KEY - 1/2" SQ x 2" LG SQ ENDS	STOCK		
99	4		3/4" x 3 1/2" LG HHMB # NUT & LW	ST.		
98			" - 1 1/2" LG TO SUIT HHMB # NUT & LW	"		
97	24		1/2" - 2" LG HHMB # NUT & LW	"		
96	12		1/2" - 2" LG HHMB # NUT & LW	"		
95	2		3/4" x 3 1/2" LG HHMB # NUT & LW	"		
94	4		3/4" x 4" LG TO SUIT HHMB # NUTS LW	"		
93	4		1" x 2 1/2" LG HHMB # NUT & LW	"		
92	4		3/4" x 3 1/2" LG HHMB # NUT & LW	"		
91	12		1/2" x 3 1/2" LG HHMB # NUT & LW	"		
90	6		1/2" x 3 1/2" LG HHMB # NUT & LW	"		
89	12		1/2" x 2 1/2" LG HHMB # NUT & LW	"		
88	16		3/4" x 3" LG HHMB # NUT & LW	ST.		
87	4	MK-63	MOUNTING PADS	-	11	
86	4	MK-61E	MOUNTING PADS	-	37	
85	1	MK-72B	EXTENSION - HAYFORD AUX HOIST LS # 25Y	-	3	
84	8		BREATHER CAP # P TWO	-	-	
83	1		COUP - LOVEJOY # L-095B2 (BORE 2 7/16")	KIT	5	
82	1		COUP - LOVEJOY # L095B2 (BORE 2 7/16")	KIT	3	

ITEM	NO. REQ'D	REF. NO.	DESCRIPTION	MAT'L	WGT.	REMARKS
81	1	MK-65E	COUP - FALK # G20-25G	F/F	-	55
80	1		COUP - LOVEJOY # L-095B2 (BORE 2 7/16")	SHIPPED LOOSE	2	✓
79	2		COUP - LOVEJOY # L-150B2 (BORE 2 7/16")	SHIPPED LOOSE	14	✓
78	1	MK-61E	TACHOMETER GENERATOR BASE	-	7	
77	1	MK-73C	ALTERNATOR BASE	-	70	
76	2	MK-69A	OVERSPEED LS BASE	-	4	
75	3	MK-68A	OVERSPEED LS BASE	-	9	
74	2	MK-71A	TROLLEY HOLD DOWN LUGS	-	1092	
73	3		A-B LIMIT SWITCH 801-FSC16 W/ CABLE	-	70	✓
72	2		CH-POWER LS TYPE "D-100" W/ CABLE	-	778	✓
71	1	MK-75A	TROLLEY TRAVEL LIMIT SWITCH	-	32	
70	1	MK-67A	AUX HOIST DRUM LIMIT SWITCH	-	10	
69	2	MK-66A	MAIN HOIST DRUM LIMIT SWITCH	-	14	
68	1		OVERSPEED LS - HUB "2210-32CC4-MM	-	5	✓
67	1		OVERSPEED LS - HUB "2210-32CC4-5.5 MM	-	5	✓
66	1		TACHOMETER GENERATOR - CH TYPE BC-6	-	60	✓
65	1		ALTERNATOR	-	450	✓
64	2		OVERSPEED LS - HUB "2210-32CC4 MM	-	9	✓
63	2		OVERSPEED LS - HUB "2210-32CC4-5.5 MM	-	10	✓
62	1	MK-70B	DINGS MAGNETIC CLUTCH COUP	-	75	

ITEM	NO. REQ'D	REF. NO.	DESCRIPTION	MAT'L	WGT.	REMARKS
61	2	MK-70A	DINGS MAGNETIC CLUTCH COUP	-	50	
60	1	MK-65C	BRAKE WHEEL COUP - 10" x 3 1/4"	-	50	
59	1	MK-65B	BRAKE WHEEL COUP - 10" x 3 1/4"	-	50	
58	2	MK-64E	DRIVE SHAFT - 2 7/16" DIA	1018CF	187	
57	2	MK-64D	DRIVE SHAFT - 1 15/16" DIA	1018CF	114	
56	2	MK-62P	COUPLING - FALK # GS2-25G F/R	-	110	
55	2	MK-62N	" - FALK # GS2-25G F/R	-	110	
54	2	MK-62M	" - FALK # GS2-15G F/R	-	40	
53	1	MK-62L	" - FALK # GS2-15G F/R	-	20	
52	1	MK-62K	COUPLING - FALK # GS2-15G F/R	-	20	

KRANCO, INC. REF. DWG. TWO (2)

CERTIFIED FOR CONSTRUCTION
BY _____

COMANCHE PEAK STEAM ELECTRIC STATION - UNIT 2 TAG: CP2-MESCCP-01

OCTOBER 8, 1980

COMANCHE PEAK S.E.S.
FINAL SAFETY ANALYSIS REPORT
UNITS 1 and 2

CONTAINMENT POLAR CRANE

FIGURE 9.1-14 Sh. 3 of 3

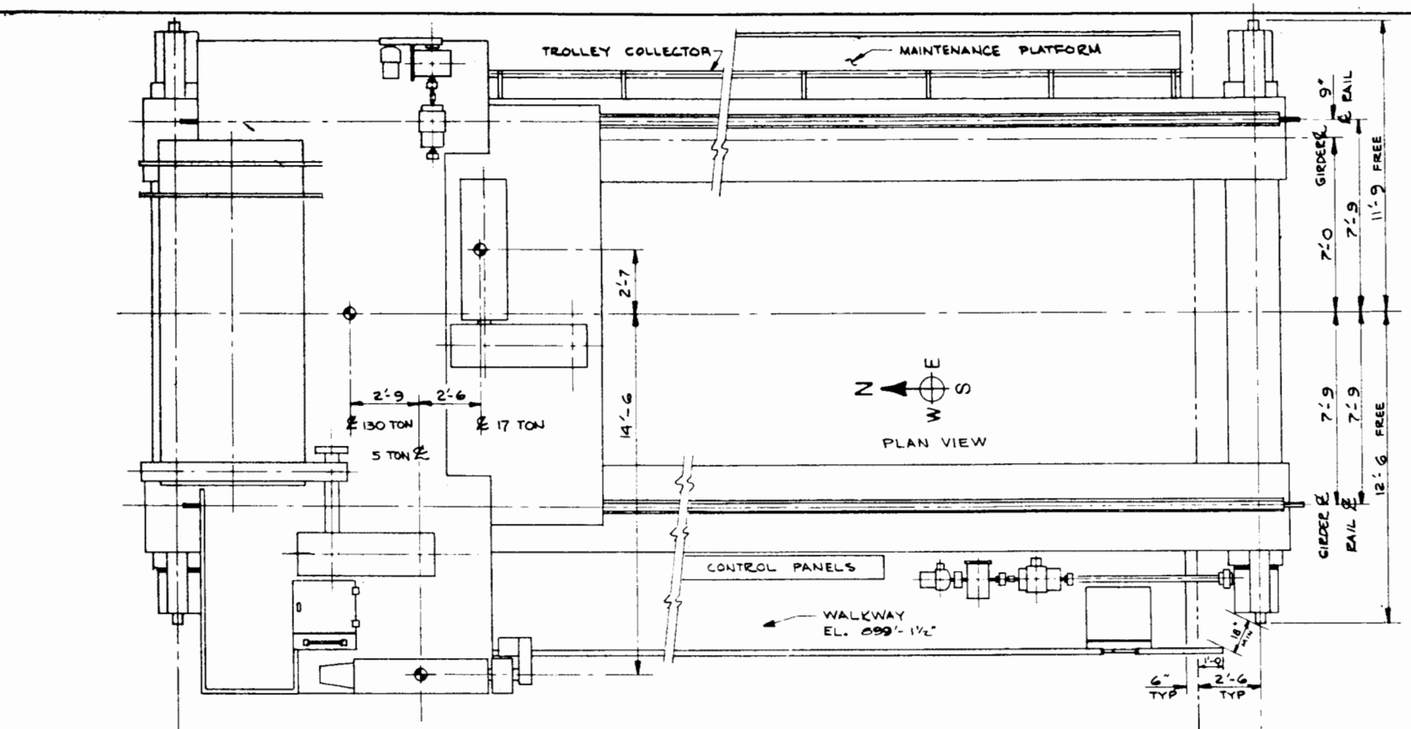

CRANE DATA	
POWER	480-3-60
BRIDGE WHEEL	(8) 24"DIA
MAX WHEEL LOAD	101,300 lbs
RUNWAY RAIL	171 lb
SERVICE	INDOOR

NOTES: 1. MAX BUMPER FORCE FOR SEISMIC AND IMPACT CONDITIONS = 6500# EACH
2. CRANE MAY BE ERECTED WITH ROOF IN PLACE.

EDERER INC. REF. DWG. No. PA-1216

OCTOBER 8, 1980

COMANCHE PEAK S.E.S.
FINAL SAFETY ANALYSIS REPORT
UNITS 1 and 2

FUEL BLDG. CRANE

FIGURE 9.1-15 (SH. 1 OF 2)

REVISIONS								
LTR	DESCRIPTION	DATE	BY	CHK	ENG	APPD	APPD	APPD
A	REMOVED CAB FROM TROLLEY. 5 TON HOIST: 6'-9 WAS 54" 30" WAS 6". 7'-7 WAS 8'-3. GIRDER ES: 14'-9 WAS 14'-0. 43" WAS 48". RAIL TO RAIL: 52" WAS 54", 6'-11 WAS 6'-9 12'-1 WAS 12'-3, 9'-7 WAS 9'-5	29 JAN 75	RJE	RAJ	[illegible]	[illegible]	[illegible]	

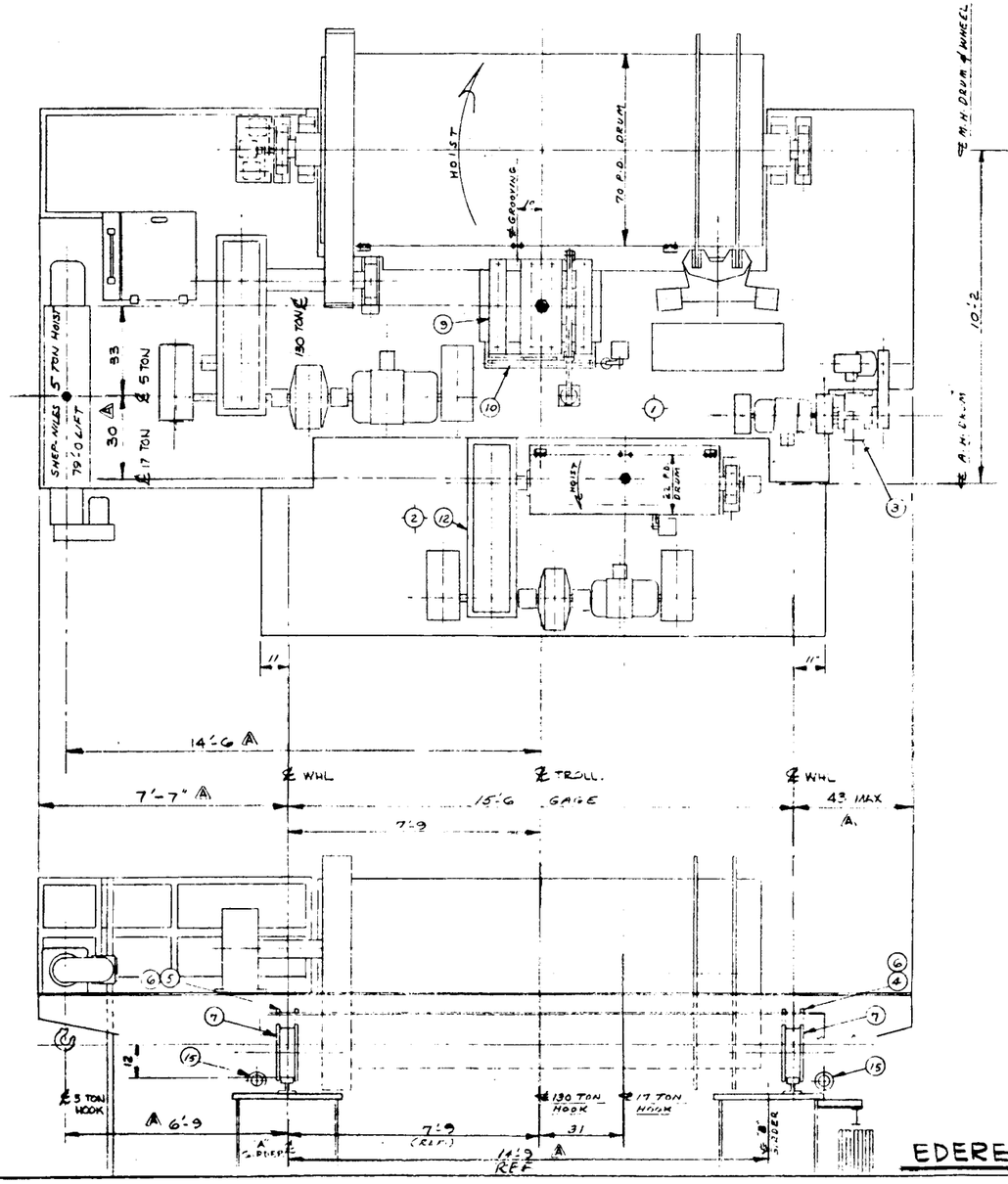

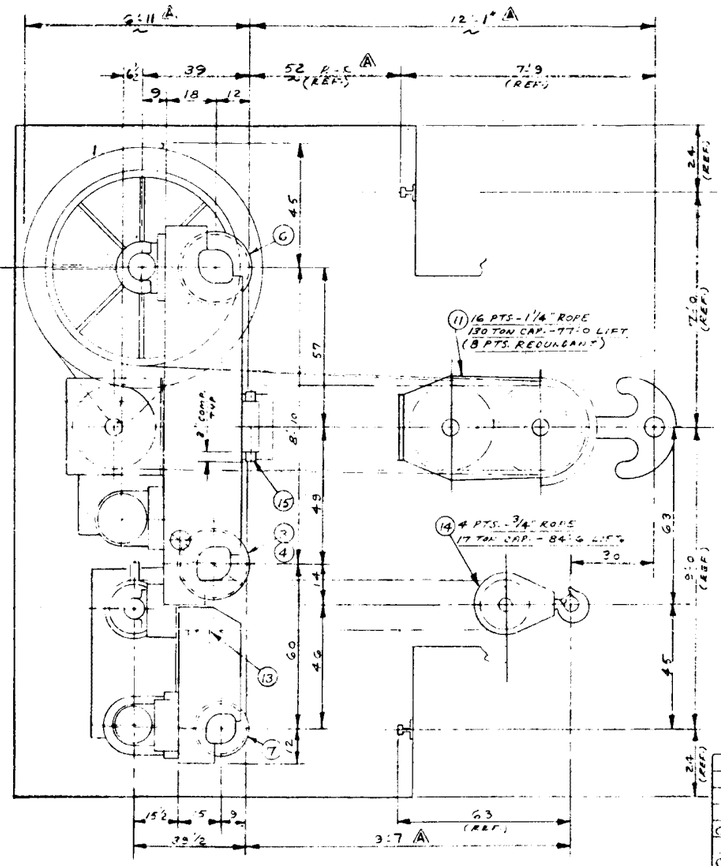

	15	BUMPER ASSY.	2	B-14191
CI	14	A.H. L-BLOCK ASSY.	1	B-14190
	13	A.H. EQUALIZER ASSY.	1	B-14189
CI	12	AUX HOIST ASSY.	1	A-11165
CI	11	M.H. L-BLOCK ASSY	1	A-11164
CI	10	M.H. TWIN SHEAVE ASSY.	1	B-14185
CI	9	M.H. U-BLOCK ASSY.	1	A-11163
	8	MAIN HOIST ASSY.	1	A-11162
	7	18" IDLER WHL ASSY.	2	B-14127
	6	24" IDLER WHL ASSY.	2	B-14186
KI	5	24" DR PLAIN WHL ASSY.	1	B-14126
KI	4	24" DR SPLINED WHL ASSY.	1	B-14187
	3	TROLL DRIVE ASSY.	1	A-11161
CI	2	TROLLEY TROLL FRAME	1	A-11159
KI	1	MAIN TROLL FRAME	1	A-11158

EDERER INC. REF. DWG. NO A-11166

OCTOBER 8, 1980

COMANCHE PEAK S.E.S.
FINAL SAFETY ANALYSIS REPORT
UNITS 1 and 2

FUEL BLDG. CRANE

FIGURE 9.1-15 (SH. 2OF2)

REV	DWN	CHKD	APVD	REMARKS
CP-44	DLK 05-28-2015	MM 06-01-2015	MHF 06-09-2015	THIS DRAWING REVISED TO INCORPORATE AI-CR-2015-004313-1 TO EDITORIALLY ADD CONTINUATION BLOCK TO M1-0240.

NOTES:

1. THIS SYSTEM IS NUCLEAR SAFETY CLASS 3 EXCEPT FOR THE FOLLOWING, WHICH ARE NON-NUCLEAR SAFETY RELATED: CHLORINATION PIPING AND ASSOCIATED COMPONENTS, INCLUDING SPARGERS; SCREEN WASH PUMPS AND ASSOCIATED PIPING AND COMPONENTS; CIRCULATING WATER MAKEUP TO THE SSI; BIOCIDE INJECTION SYSTEM; CORROSION INHIBITION SYSTEM; AND RECIRCULATION LINE (ABANDONED IN PLACE).
2. FOR MECHANICAL SYMBOLS AND NOTES SEE DRAWING M1-0200.
3. ALL UNIT 2 LINES THAT ARE SHOWN WILL BE INSTALLED WITH UNIT 1 CONSTRUCTION.
4. TRAVELING SCREEN SPRAY HEADERS ARE SUPPLIED BY THE TRAVELING SCREEN MANUFACTURER.
5. 3□" AND SMALLER BRANCH CONNECTIONS TO MAIN LINES SHALL BE IN ACCORDANCE WITH THE DETAIL ON DRAWING M1-1103-01 (LOC: F-6). INSTRUMENTATION CONNECTIONS SHALL BE IN ACCORDANCE WITH SKETCHES XA-2323-M-309 AND XA-2323-M-757.
6. THREE (3") INCH Y-STRAINERS. STRAINERS CP1-SWSRPL-01/02/03/04 SHALL HAVE 40 MESH BASKETS MINIMUM AND STRAINERS CP1-SWSRPL-05/06/07/08 SHALL HAVE 200 MESH BASKETS MINIMUM.
7. FOR TYP VENT AND DRAIN DETAILS SEE DRAWING M1-0740-01.
8. INSTRUMENTATION AND CONTROL LOGIC PROVIDED BY CHLORINATION SYSTEM VENDOR.
9. UNLESS OTHERWISE NOTED ALL DRAINS COLLECTED BY LOCAL DRAIN SYSTEM.
10. DELETED
11. FOR TRASH BASKET DETAILS REFER TO STRUCTURAL DRAWINGS S-1107 AND S-1108 (CPX-SWSNTR-01).
12. CHLORINATION HEADER SUPPLY VALVES 1SW-0056 ,1SW-0057 , 2SW-0056 AND 2SW-0057 ARE NORMALLY CLOSED. DURING CHLORINATION OPERATIONS, ONLY ONE OF THE FOUR VALVES IS OPENED, THUS PRESERVING TRAIN AND UNIT SEPARATION.
13. SCREEN WASH HEADER SUPPLY CROSSTIE VALVE XSW-0012 IS NORMALLY CLOSED. TRAIN A SCREEN WASH HEADER SUPPLY VALVES 1SW-0008 AND 2SW-0008 ARE ALIGNED SUCH THAT ONLY ONE VALVE IS OPEN AT A TIME. TRAIN B SCREEN WASH HEADER SUPPLY VALVES 1SW-0013 AND 2SW-0013 ARE ALIGNED SUCH THAT ONLY ONE VALVE IS OPEN AT A TIME. THUS, TRAIN AND UNIT SEPARATION IS PRESERVED.
14. DELETED
15. CROSS-CONNECT OPERABILITY FOR GDC-5 AND GDC-44

CONDITION	UNIT (MODE 1-4) TRAIN ISOL VLV	TRAIN ISOL VLV	CROSSTIE XSW-0006 ISOL VLV	UNIT (MODE 1-4) TRAIN ISOL VLV	TRAIN ISOL VLV
a. NORMAL	NC*	NC*	LC*	NC*	NC*
b. 1 TRAIN ISOLATION ISOLATION VALVE OPEN	LO	LC	LC*	NC*	NC*
c. THE UNIT CROSSTIE ISOLATION VALVE OPEN	LC*	LC*	LO	NC*	NC*
d. b + c	LO	LC	LO	LC*	LC*
e. 1 TRAIN ISOLATION VALVE OPEN ON EACH UNIT	LO	LC	LC*	LO	LC

* VALVES MAY BE CYCLED ONE AT A TIME IN ACCORDANCE WITH TECHNICAL SPECIFICATION 3.7.8 REQUIREMENTS AS DESCRIBED IN THE LCO BASES.

16. CHECK VALVE INTERNALS REMOVED, VALVE BODIES ABANDONED IN PLACE.
17. 1SW-0428 AND 1SW-0429 TO BE USED AS THROTTLING VALVES AND THEN LOCKED IN POSITION.
18. PROCESS TUBING IS ROUTED INSIDE CPVC OR PVC PIPE.
19. PROCESS TUBING IS ROUTED INSIDE METALLIC PIPE, PIPE ACTS AS A FIRE BREAK.
20. TAGS ASSOCIATED WITH THE SWIS CORROSION INHIBITOR/ DISPERSANT STORAGE AND INJECTION SKID ARE:

CPX-SWPMCI-01	SSW CORROSION INHIBITOR PHOSPHORIC ACID PUMP X-01
CPX-SWPMCI-02	SSW CORROSION INHIBITOR POLYMER PUMP X-02
CPX-SWPMCI-03	SSW CORROSION INHIBITOR HEDP PUMP X-03
CPX-SWTNCI-01	SSW CORROSION INHIBITOR PHOSPHORIC ACID TANK-01
CPX-SWTNCI-02	SSW CORROSION INHIBITOR POLYMER TANK-02
CPX-SWTNCI-03	SSW CORROSION INHIBITOR HEDP TANK-03
X-LT-3596A	SSW CORROSION INHIBITOR PHOSPHORIC ACID TANK LEVEL TRANSMITTER
X-LT-3596B	SSW CORROSION INHIBITOR POLYMER TANK LEVEL TRANSMITTER
X-LT-3596C	SSW CORROSION INHIBITOR HEDP TANK LEVEL TRANSMITTER

DRAWING 2323-M1-0233 REV CP-10 HAS BEEN SPLIT INTO THE FOLLOWING SHEETS:
M1-0233
M1-0233-A

CLASS I
(NUCLEAR SAFETY-RELATED)

SAFETY CLASS 1	SEISMIC CATEGORY I
SAFETY CLASS 2	CLASS 1E
SAFETY CLASS 3	ASSOCIATED CIRCUITS

LUMINANT
CPNPP
GLEN ROSE, TEXAS

FLOW DIAGRAM
STATION SERVICE WATER SYSTEM

DWG. NO.	SH. NO.	REV.
M1-0233	-	CP-44

FSAR FIGURE 9.2-1

THIS DRAWING CREATED ELECTRONICALLY

REF CKD CP-29 10/15/97

SSSSSSSSDATESSSSS

me103690.dgn M1-0233 < FINAL PRINT >

REV	DWN	CHKD	APVD	REMARKS
CP-21	DLK 06-07-2017	MM 06-08-2017	MHF 06-08-2017	THIS DRAWING REVISED TO INCORPORATE EDITORIALLY CHANGES PER AI-TR-2017-006942-1.

NOTES:

1. DELETED
2. THIS SYSTEM IS NUCLEAR SAFETY CLASS 3 EXCEPT AS NOTED
3. FOR MECHANICAL SYMBOLS AND NOTES SEE DRAWING M1-0200.
4. ALL UNIT 2 LINES THAT ARE SHOWN WILL BE INSTALLED WITH UNIT 1 CONSTRUCTION.
5. 3□" AND SMALLER BRANCH CONNECTIONS TO MAIN LINES SHALL BE IN ACCORDANCE WITH THE DETAIL ON DRAWING M1-1103-01 (ZONE F-6). INSTRUMENTATION CONNECTIONS SHALL BE IN ACCORDANCE WITH SKETCHES XA-2323-M-309 AND XA-2323-M-757.
6. RELIEF VALVES SUPPLIED WITH HEAT EXCHANGER SUPPLIED BY STRUTHERS WELLS.
7. FOR TYPICAL VENT AND DRAIN DETAILS SEE DRAWING M1-0740-01.
8. UNLESS OTHERWISE NOTED ALL DRAINS COLLECTED BY LOCAL DRAIN SYSTEM.
9. REMOVE CHECK VALVE 1SW-0016 , 1SW-0017 INTERNALS, ABANDON IN PLACE PER DCN 6537 REV 0.
10. SURFACE MOUNTED ULTRASONIC FLOW ELEMENT AND ASSOCIATED REMOTE MOUNTED FLOW TRANSDUCER ARE ABANDONED IN PLACE PER FDA-2015-000042-01.

FSAR FIGURE 9.2-1

THIS DRAWING CREATED ELECTRONICALLY

DRAWING 2323-M1-0233 REV CP-10
HAS BEEN SPLIT INTO THE FOLLOWING SHEETS:

M1-0233
M1-0233-A

CLASS I
(NUCLEAR SAFETY-RELATED)
SAFETY CLASS 1 SEISMIC CATEGORY I
SAFETY CLASS 2 CLASS 1E
SAFETY CLASS 3 ASSOCIATED CIRCUITS

LUMINANT
CPNPP
GLEN ROSE, TEXAS

FLOW DIAGRAM
STATION SERVICE WATER
SYSTEM

DWG. NO.	SH. NO.	REV.
M1-0233	A	CP-21

me379900.dgn A M1-0233-A B C D E F G FINAL PRINT H

CPE

REV	DWN	CHK	APVD	REMARKS
CP-31	DLK 06-16-2016	GAW 06-16-2016		THIS DRAWING REVISED TO INCORPORATE DESIGN CHANGE FDA 2016-000053-01-00 PER SK-00001-16-000053-01-00.

NOTES:

1. THIS SYSTEM IS NUCLEAR SAFETY CLASS 3.
2. FOR MECHANICAL SYMBOLS AND NOTES SEE DRAWING M1-0200.
3. 3□" AND SMALLER BRANCH CONNECTIONS TO MAIN LINES SHALL BE IN ACCORDANCE WITH THE DETAIL ON DRAWING M1-1103-01 (ZONE F-6). INSTRUMENTATION CONNECTIONS SHALL BE IN ACCORDANCE WITH SKETCHES XA-2323-M-309 AND XA-2323-M-757.
4. UNLESS OTHERWISE NOTED ALL DRAINS TO BE COLLECTED LOCALLY UNDER ADMINISTRATIVE CONTROL.
5. CHECK VALVE INTERNALS ARE REMOVED, VALVE BODIES ARE ABANDONED IN PLACE.
6. VACUUM BREAKER SET POINT 1 0.5 PSID.
7. Y-STRAINER SCREEN HAS BEEN REMOVED FOR CP1-SWSRCH-01, CP1-SWSRCH-02, CP1-SWSRCS-01, CP1-SWSRCS-02, CP1-SWSRSI-01 AND CP1-SWSRSI-02.
8. DELETED
9. SURFACE MOUNTED ULTRASONIC FLOW ELEMENT AND ASSOCIATED REMOTE MOUNTED FLOW TRANSDUCER ARE ABANDONED IN PLACE PER FDA-2015-000042-01.
10. VACUUM BREAKERS CP1-SWVAVB-03 AND CP1-SWVAVB-04 ARE ABANDONED IN PLACE.

R

CLASS I
(NUCLEAR SAFETY-RELATED)
SAFETY CLASS 1 SEISMIC CATEGORY I
SAFETY CLASS 2 CLASS 1E
SAFETY CLASS 3 ASSOCIATED CIRCUITS

LUMINANT
CPNPP
GLEN ROSE, TEXAS

FLOW DIAGRAM
STATION SERVICE WATER SYSTEM

DWG. NO.	SH. NO.	REV.
M1-0234	-	CP-31

FSAR FIGURE 9.2-1

THIS DRAWING CREATED ELECTRONICALLY

REF CKD 8-5-98 CP-21

mc103910.dgn A M1-0234 FINAL PRINT

REV	DWN	CHK'D	APV'D	REMARKS
CP-16	DLK 05-28-2015	MM 06-08-2015	MHF 06-09-2015	THIS DRAWING REVISED TO INCORPORATE AI-CR-2015-004313-1 TO EDITORIALLY ADD CONTINUATION BLOCK FROM M1-0233.

NOTES:

1. FOR MECHANICAL SYMBOLS AND NOTES SEE DRAWING M1-0200.
2. UNLESS OTHERWISE NOTED ALL DRAINS COLLECTED BY LOCAL DRAIN SYSTEM.
3. DELETED
4. LINE CL-X-205 FROM VALVE XCL-0326 TO ITS DISCHARGE IN THE STATION SERVICE WATER DISCHARGE OPEN CANAL SHALL BE A DOUBLE CONTAINMENT CONFIGURATION CONSISTING OF AN 1□" PVC (009) PIPE WITH □" CPVC (008) INSIDE.

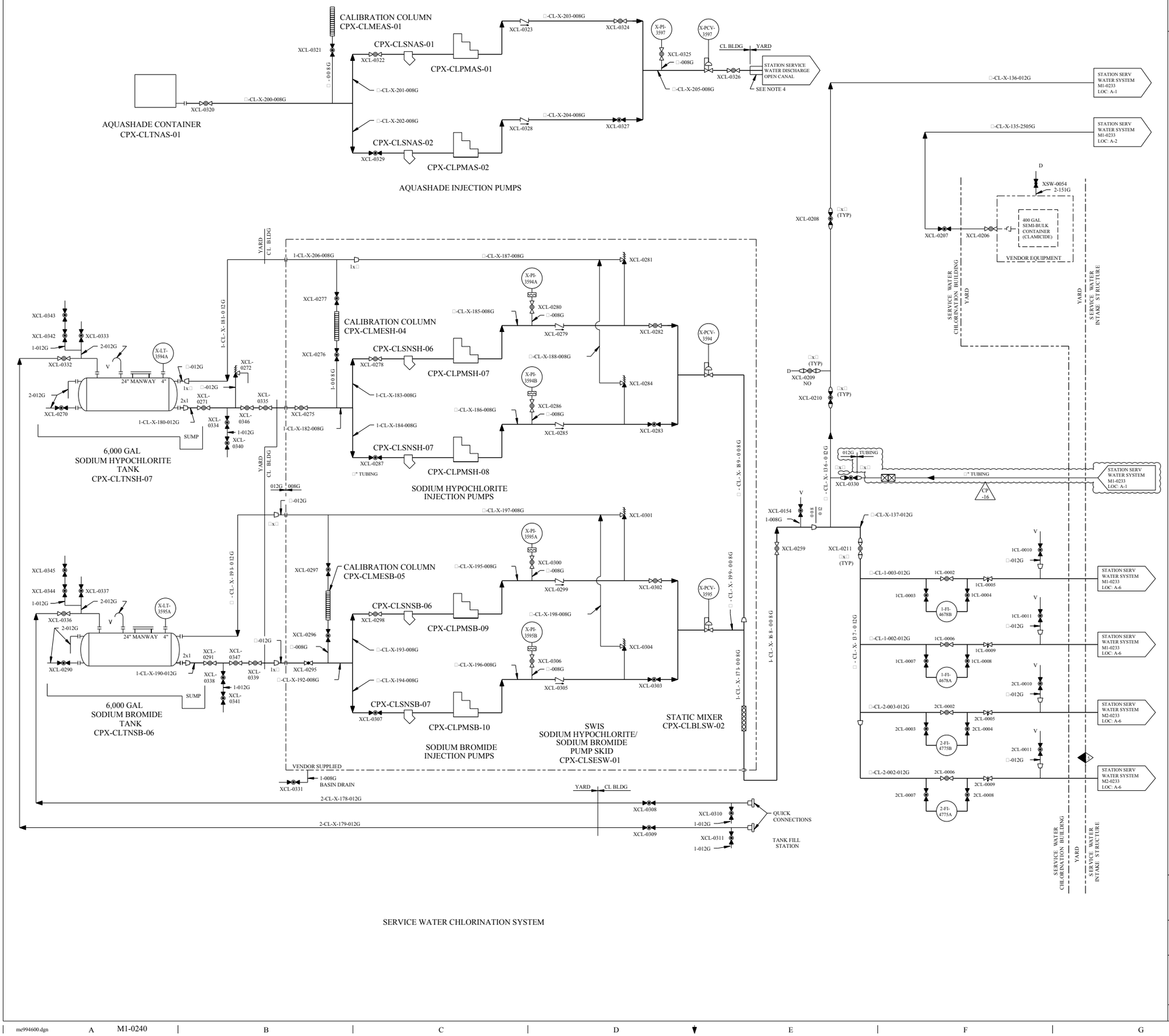

FSAR FIGURE 9.2-1

THIS DRAWING CREATED ELECTRONICALLY

CLASS II

LUMINANT
CPNPP
GLEN ROSE, TEXAS

FLOW DIAGRAM
CHLORINATION SYSTEM

DWG. NO.	SH. NO.	REV.
M1-0240	-	CP-16

$$$$$$$$DATE$$$$$$$$ REF CKD 02/24/10 CP-13

me994600.dgn A M1-0240 B C D E F G < FINAL PRINT > H

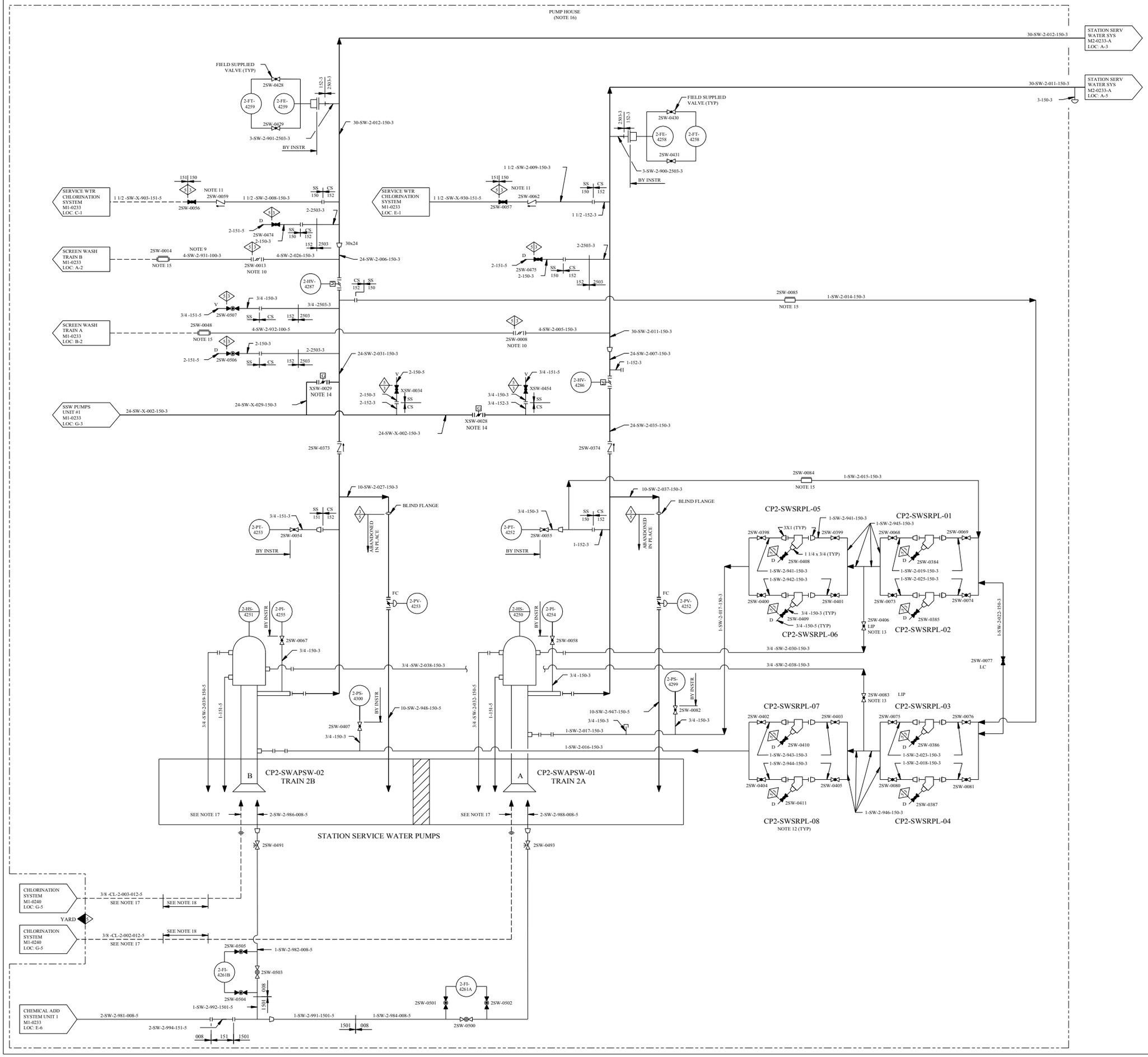

REV	DWN	CHK	APVD	REMARKS
CP-20	BGG 02-01-2011	DLA 02-02-2011		THIS DRAWING REVISED TO INCORPORATE DESIGN CHANGE FDA 2006-000911-01-00 PER SK-0001-06-000911-01-00.

NOTES:

1. THIS SYSTEM IS NUCLEAR SAFETY CLASS 3 EXCEPT FOR THE FOLLOWING, WHICH ARE NON-NUCLEAR SAFETY RELATED:
   CHLORINATION PIPING AND ASSOCIATED COMPONENTS, INCLUDING SPARGERS;
   SCREEN WASH PUMPS AND ASSOCIATED PIPING AND COMPONENTS;
   CIRCULATING WATER MAKEUP TO THE SSI;
   BIOCIDE INJECTION SYSTEM; CORROSION INHIBITION SYSTEM; AND
   RECIRCULATION LINE (ABANDONED IN PLACE).
2. FOR MECHANICAL SYMBOLS AND NOTES SEE DWG M1-0200.
3. DELETED
4. DELETED
5. UNLESS OTHERWISE NOTED ALL DRAINS COLLECTED BY LOCAL DRAIN SYSTEM.
6. THREE INCH Y STRAINERS.
7. DELETED
8. FOR TYPICAL VENT AND DRAIN DETAILS SEE DWG M1-0740-01.
9. UNIT 2 LINE SHALL BE SHIELDED/LAGGED PER THE REQUIREMENTS PROVIDED IN PIPELINE DESGINATION LIST, CPSES-M-1017, PRIOR TO PRESSURIZATION (i.e. START-UP FLUSHING, HYDRO TESTING).
10. SCREEN WASH HEADER SUPPLY CROSSTIE VALVE XSW-0012 IS NORMALLY CLOSED. TRAIN A SCREEN WASH HEADER SUPPLY VALVES 1SW-0008 AND 2SW-0008 ARE ALIGNED SUCH THAT ONLY ONE VALVE IS OPEN AT A TIME TRAIN B SCREEN WASH HEADER SUPPLY VALVES 1SW-0013 AND 2SW-0013 ARE ALIGNED SUCH THAT ONLY ONE VALVE IS OPEN AT A TIME. THUS, TRAIN AND UNIT SEPERATION IS PRESERVED.
11. CHLORINATION HEADER SUPPLY VALVES 1SW-0056 , 1SW-0057 , 2SW-0056 AND 2SW-0057 ARE NORMALLY CLOSED, DURING CHLORINATION OPERATIONS, ONLY ONE OF THE FOUR VALVES IS OPENED. THUS PRESERVING TRAIN AND UNIT SEPERATION.
12. THREE (3") INCH Y-STRAINERS. STRAINERS CP2-SWSRPL-01 , CP2-SWSRPL-02 , CP2-SWSRPL-03 AND CP2-SWSRPL-04 SHALL HAVE 40 MESH BASKETS MINIMUM AND STRAINERS CP2-SWSRPL-05 CP2-SWSRPL-06 , CP2-SWSRPL-07 AND CP2-SWSRPL-08 SHALL HAVE 200 MESH BASKETS MINIMUM. R
13. 2SW-0406 AND 2SW-0083 TO BE USED AS THROTTLING VALVES AND THEN LOCKED IN POSITION.
14. CROSS-CONNECT OPERABILITY FOR GDC-5 AND GDC-44

CONDITION	UNIT (MODE 1-4) TRAIN ISOL VLV	TRAIN ISOL VLV	CROSSTIE XSW-0006 ISOL VLV	UNIT (MODE 1-4) TRAIN ISOL VLV	TRAIN ISOL VLV
a. NORMAL	NC*	NC*	LC*	NC*	NC*
b. 1 TRAIN ISOLATION ISOLATION VALVE OPEN	LO	LC	LC*	NC*	NC*
c. THE UNIT CROSSTIE ISOLATION VALVE OPEN	LC*	LC*	LO	NC*	NC*
d. b + c	LO	LC	LO	LC*	LC*
e. 1 TRAIN ISOLATION VALVE OPEN ON EACH UNIT	LO	LC	LC*	LO	LC

* VALVES MAY BE CYCLED ONE AT A TIME IN ACCORDANCE WITH TECHNICAL SPECIFICATION 3.7.8 REQUIREMENTS AS DESCRIBED IN THE LCO BASES.

15. CHECK VALVE INTERNALS REMOVED, VALVE BODY ABANDONED IN PLACE.
16. ALL COMPONENTS ON THIS DRAWING ARE LOCATED INSIDE THE PUMP HOUSE. SEE M1-0233 FOR UNIT 1 COMPONENTS ALSO LOCATED IN THE SAME PUMP HOUSE.
17. PROCESS TUBING IS ROUTED INSIDE CPVC OR PVC PIPE.
18. PROCESS TUBING IS ROUTED INSIDE METALLIC PIPE, PIPE ACTS AS A FIRE BREAK.

FSAR FIGURE 9.2-1

THIS DRAWING CREATED ELECTRONICALLY

DRAWING M2-0233 REV CP-2
HAS BEEN SPLIT INTO THE FOLLOWING SHEETS:
M2-0233
M2-0233-A

CLASS I
(NUCLEAR SAFETY-RELATED)
SAFETY CLASS 1 — SEISMIC CATEGORY I
SAFETY CLASS 2 — CLASS 1E
SAFETY CLASS 3 — ASSOCIATED CIRCUITS

LUMINANT
CPNPP
GLEN ROSE, TEXAS

FLOW DIAGRAM
STATION SERVICE WATER
SYSTEM

DWG. NO. M2-0233 | SH. NO. - | REV. CP-20

FINAL PRINT

REF CKD CP-11 2/19/98

REV	DWN	CHKD	APVD	REMARKS
CP-9	DLK 06-24-2015	MM 08-19-2015		THIS DRAWING REVISED TO INCORPORATE DESIGN CHANGE FDA 2015-000042-01-00 PER SK-0009-15-000042-01-00.

NOTES:

1. THIS SYSTEM IS NUCLEAR SAFETY CLASS 3 EXCEPT FOR THE FOLLOWING, WHICH ARE NON-NUCLEAR SAFETY RELATED:
   CHLORINATION PIPING AND ASSOCIATED COMPONENTS, INCLUDING SPARGERS;
   SCREEN WASH PUMPS AND ASSOCIATED PIPING AND COMPONENTS;
   CIRCULATING WATER MAKEUP TO THE SSI;
   BIOCIDE INJECTION SYSTEM; AND
   RECIRCULATION LINE (ABANDONED IN PLACE).
2. FOR MECHANICAL SYMBOLS AND NOTES SEE DWG M1-0200.
3. DELETED
4. RELIEF VALVE SUPPLIED WITH THE HEAT EXCHANGER.
5. UNLESS OTHERWISE NOTED ALL DRAINS COLLECTED BY LOCAL DRAIN SYSTEM.
6. DELETED
7. DELETED
8. FOR TYPICAL VENT AND DRAIN DETAILS SEE DWG M1-0740-01.
9. CHECK VALVE INTERNAL REMOVED, VALVE BODY ABANDONED IN PLACE.
10. SURFACE MOUNTED ULTRASONIC FLOW ELEMENT AND ASSOCIATED REMOTE MOUNTED FLOW TRANSDUCER ARE ABANDONED IN PLACE PER FDA-2015-000042-01.

R

FSAR FIGURE 9.2-1

THIS DRAWING CREATED ELECTRONICALLY

DRAWING M2-0233 REV CP-2
HAS BEEN SPLIT INTO THE FOLLOWING SHEETS:
M2-0233
M2-0233-A

CLASS I
(NUCLEAR SAFETY-RELATED)
SAFETY CLASS 1 — SEISMIC CATEGORY I
SAFETY CLASS 2 — CLASS 1E
SAFETY CLASS 3 — ASSOCIATED CIRCUITS

LUMINANT
CPNPP
GLEN ROSE, TEXAS

FLOW DIAGRAM
STATION SERVICE WATER
SYSTEM
SHEET 2 OF 3

DWG. NO.	SH. NO.	REV.
M2-0233	A	CP-9

FINAL PRINT

rne862700.dgn M2-0233-A

REV	DWN	CHKD	APVD	REMARKS
CP-13	DLK 06-16-2016	GAW 06-16-2016		THIS DRAWING REVISED TO INCORPORATE DESIGN CHANGE FDA 2016-000053-01-00 PER SK-0002-16-000053-01-00.

NOTES:

1. THIS SYSTEM IS NUCLEAR SAFETY CLASS 3.
2. FOR MECHANICAL SYMBOLS AND NOTES SEE DRAWING M1-0200.
3. 3□" AND SMALLER BRANCH CONNECTIONS TO MAIN LINES SHALL BE IN ACCORDANCE WITH THE DETAIL ON DRAWING M2-1103-01 INSTRUMENTATION CONNECTIONS SHALL BE IN ACCORDANCE WITH SKETCHES XA-2323-M-309 AND XA-2323-M-757.
4. ALL DRAINS SHALL BE COLLECTED IN LOCAL DRAIN SYSTEM UNLESS OTHERWISE SPECIFIED.
5. CHECK VALVE INTERNALS ARE REMOVED, VALVE BODIES ARE ABANDONED IN PLACE.
6. VACUUM BREAKER SET POINT 1 0.5 PSID.
7. Y-STRAINER SCREEN HAS BEEN REMOVED FOR CP2-SWSRCH-01, CP2-SWSRCS-01 AND CP2-SWSRSI-01.
8. Y-STRAINER SCREEN HAS BEEN REMOVED FOR CP2-SWSRCH-02, CP2-SWSRCS-02 AND CP2-SWSRSI-02.
9. SURFACE MOUNTED ULTRASONIC FLOW ELEMENT AND ASSOCIATED REMOTE MOUNTED FLOW TRANSDUCER ARE ABANDONED IN PLACE PER FDA-2015-000042-01.
10. VACUUM BREAKERS CP2-SWVAVB-03 AND CP2-SWVAVB-04 ABANDONED IN PLACE.

R

FSAR FIGURE 9.2-1

THIS DRAWING CREATED ELECTRONICALLY

REF CIRD 6/19/2001

CLASS I
(NUCLEAR SAFETY-RELATED)

SAFETY CLASS 1	SEISMIC CATEGORY I
SAFETY CLASS 2	CLASS 1E
SAFETY CLASS 3	ASSOCIATED CIRCUITS

LUMINANT
CPNPP
GLEN ROSE, TEXAS

FLOW DIAGRAM
STATION SERVICE WATER
SYSTEM

DWG. NO.	SH. NO.	REV.
M2-0234	-	CP-13

me101750.dgn A M2-0234 FINAL PRINT

Figure 9.2-2 has been deleted.

REV	DWN	CHK	APVD	REMARKS
CP-23	DJK 10-22-2012	GAW 10-22-2012		THIS DRAWING REVISED TO INCORPORATE DESIGN CHANGE FDA 2012-000187-01-00 PER SK-0001-12-000187-01-00.

NOTES:

1. CCW SYSTEM IS SAFETY CLASS 3 EXCEPT AS NOTED.
2. DELETED
3. DELETED
4. DELETED
5. UNLESS OTHERWISE NOTED, ALL DRAINS TO BE LOCALLY COLLECTED UNDER ADMINISTRATIVE CONTROL.
6. FOR GENERAL NOTES AND SYMBOLS SEE DWG M1-0200.
7. THIS FLOW DIAGRAM SHOWS VALVE POSITIONS UNIT 1 AND 2 IN OPERATION.
8. ALL VALVES IDENTIFIED AS LIP SHALL BE LOCKED IN POSITION IMMEDIATELY AFTER FINAL BALANCING TO ENSURE THROTTLED POSITION IS MAINTAINED.
9. DELETED
10. VALVES 1CC-0107 , 1CC-0109 , 1CC-0157 AND 1CC-0158 HAVE MODIFIED DISCS THAT FUNCTION AS RESTRICTIVE ORIFICES. THEY CANNOT BE USED FOR ISOLATION PURPOSES.

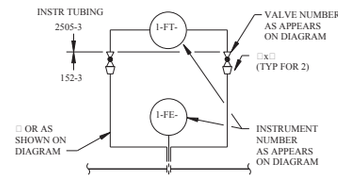

TYPICAL FLOW STATION DETAIL
(UNLESS OTHERWISE NOTED)

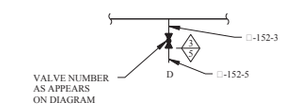

TYPICAL DRAIN DETAIL
(UNLESS OTHERWISE NOTED)

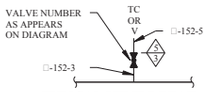

TYPICAL VENT DETAIL
(UNLESS OTHERWISE NOTED)
TYPICAL ALSO FOR TEST CONN (TC)

DRAWING 2323-M1-0229 REV CP-5
HAS BEEN SPLIT INTO THE FOLLOWING SHEETS:
M1-0229
M1-0229-A
M1-0229-B

CLASS I
(NUCLEAR SAFETY-RELATED)

SAFETY CLASS 1	SEISMIC CATEGORY I
SAFETY CLASS 2	CLASS 1E
SAFETY CLASS 3	ASSOCIATED CIRCUITS

LUMINANT
CPNPP
GLEN ROSE, TEXAS

FLOW DIAGRAM
COMPONENT COOLING WATER
SYSTEM
SHEET 1 OF 8

DWG. NO.	SH. NO.	REV.
M1-0229	-	CP-23

FSAR FIGURE 9.2-3

THIS DRAWING CREATED ELECTRONICALLY

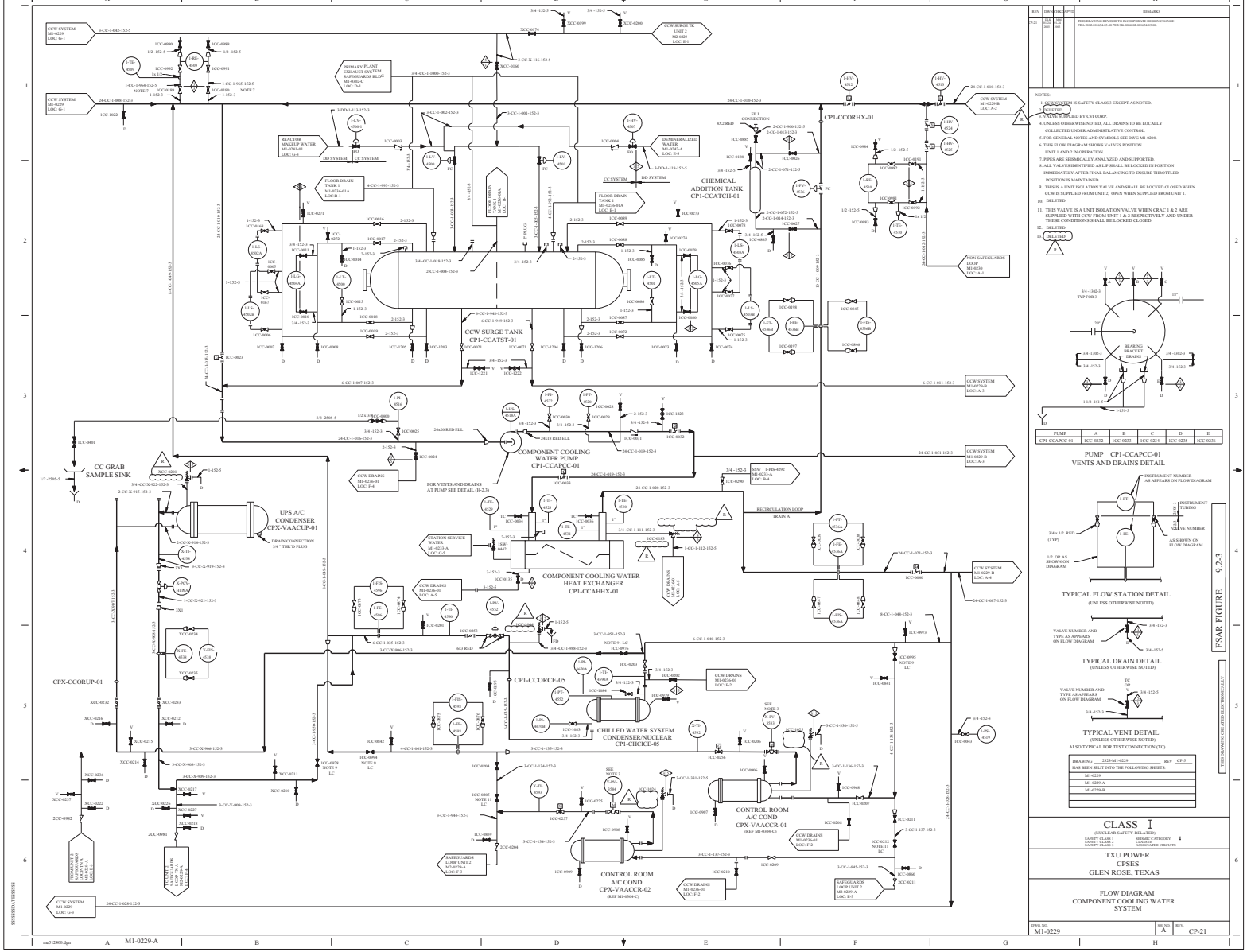

NOTES:

1. CCW SYSTEM IS SAFETY CLASS 3 EXCEPT AS NOTED.
2. DELETED
3. VALVES SUPPLIED BY CVI CORP.
4. UNLESS OTHERWISE NOTED, ALL DRAINS TO BE LOCALLY COLLECTED UNDER ADMINISTRATIVE CONTROL.
5. FOR GENERAL NOTES AND SYMBOLS SEE DWG M1-0200.
6. THIS FLOW DIAGRAM SHOWS VALVES POSITION UNIT 1 AND 2 IN OPERATION.
7. PIPES ARE SEISMICALLY ANALYZED AND SUPPORTED.
8. ALL VALVES IDENTIFIED AS LP SHALL BE LOCKED IN POSITION IMMEDIATELY AFTER FINAL BALANCING TO ENSURE THROTTLED POSITION IS MAINTAINED.
9. THIS IS A UNIT ISOLATION VALVE AND SHALL BE LOCKED CLOSED WHEN CCW IS SUPPLIED FROM UNIT 2. OPEN WHEN SUPPLIED FROM UNIT 1.
10. DELETED
11. THIS VALVE IS A UNIT ISOLATION VALVE WHEN CRAC 1 & 2 ARE SUPPLIED WITH CCW FROM UNIT 1 & 2 RESPECTIVELY AND UNDER THESE CONDITIONS SHALL BE LOCKED CLOSED.
12. DELETED
13. DELETED

PUMP	A	B	C	D	E
CP1-CCAPCC-01	ICC-0232	ICC-0233	ICC-0234	ICC-0235	ICC-0236

PUMP CP1-CCAPCC-01
VENTS AND DRAINS DETAIL

TYPICAL FLOW STATION DETAIL
(UNLESS OTHERWISE NOTED)

TYPICAL DRAIN DETAIL
(UNLESS OTHERWISE NOTED)

TYPICAL VENT DETAIL
(UNLESS OTHERWISE NOTED)
ALSO TYPICAL FOR TEST CONNECTION (TC)

DRAWING 2221-M1-0229 REV CP-5 HAS BEEN SPLIT INTO THE FOLLOWING SHEETS:
M1-0229
M1-0229-A
M1-0229-B

CLASS I
(NUCLEAR SAFETY-RELATED)
SAFETY CLASS 1 / SAFETY CLASS 2 / SAFETY CLASS 3
SEISMIC CATEGORY I
ASSOCIATED CIRCUITS

TXU POWER
CPSES
GLEN ROSE, TEXAS

FLOW DIAGRAM
COMPONENT COOLING WATER SYSTEM

DWG. NO. M1-0229 | REV. NO. A | REV. CP-21

FSAR FIGURE 9.2-3

THIS DRAWING REVISED TO INCORPORATE DESIGN CHANGE FDA_2002-0003-01-00 PER DCA_0002-02-00-01/A-01-00.

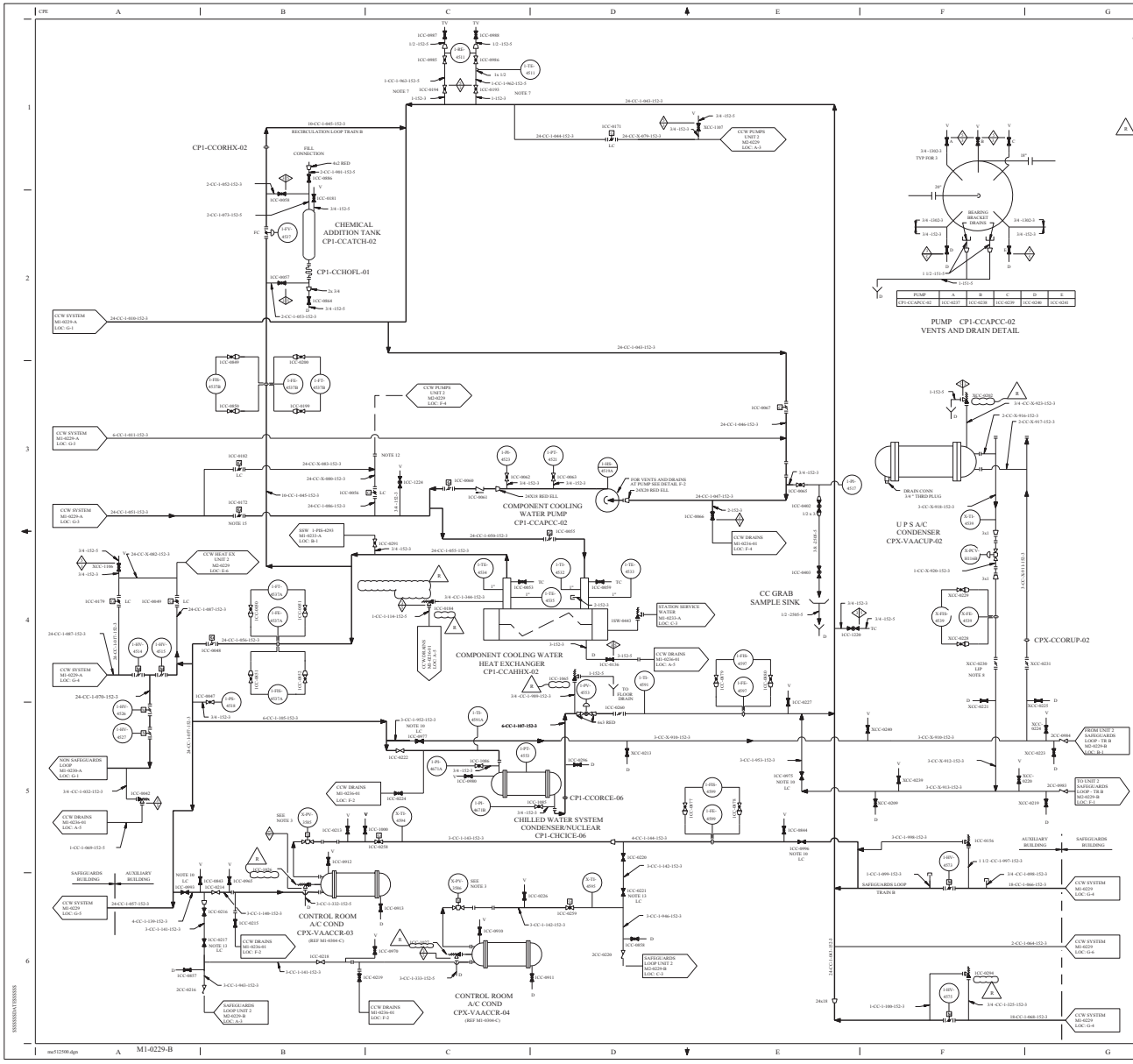
CP1-CCORHX-02
CHEMICAL ADDITION TANK CP1-CCATCH-02
CP1-CCHOFL-01
CCW PUMPS UNIT 2 M2-0229 LOC: A-3
CCW PUMPS UNIT 2 M2-0229 LOC: F-4
COMPONENT COOLING WATER PUMP CP1-CCAPCC-02
COMPONENT COOLING WATER HEAT EXCHANGER CP1-CCAHHX-02
CC GRAB SAMPLE SINK
CPX-CCORUP-02
CP1-CCORCE-06
CHILLED WATER SYSTEM CONDENSER/NUCLEAR CP1-CHCICE-06
CONTROL ROOM A/C COND CPX-VAACCR-03
CONTROL ROOM A/C COND CPX-VAACCR-04
U P S A/C CONDENSER CPX-VAACUP-02
PUMP CP1-CCAPCC-02 VENTS AND DRAIN DETAIL
TYPICAL FLOW STATION DETAIL
(UNLESS OTHERWISE NOTED)
TYPICAL DRAIN DETAIL
(UNLESS OTHERWISE NOTED)
TYPICAL VENT DETAIL
(UNLESS OTHERWISE NOTED)
TYPICAL ALSO FOR TEST CONNECTION (TC)
FSAR FIGURE 9.2-3
THIS DRAWING WAS CREATED ELECTRONICALLY
DRAWING 2323-M1-0229 REV CP-5
HAS BEEN SPLIT INTO THE FOLLOWING SHEETS:
M1-0229
M1-0229-A
M1-0229-B
CLASS I
(NUCLEAR SAFETY-RELATED)
SAFETY CLASS 1
SAFETY CLASS 2
SAFETY CLASS 3
SEISMIC CATEGORY I
ASSOCIATED CIRCUITS
TXU POWER
CPSES
GLEN ROSE, TEXAS
FLOW DIAGRAM
COMPONENT COOLING WATER SYSTEM
DWG. NO. M1-0229
REV. NO. B
REV. CP-25
M1-0229-B

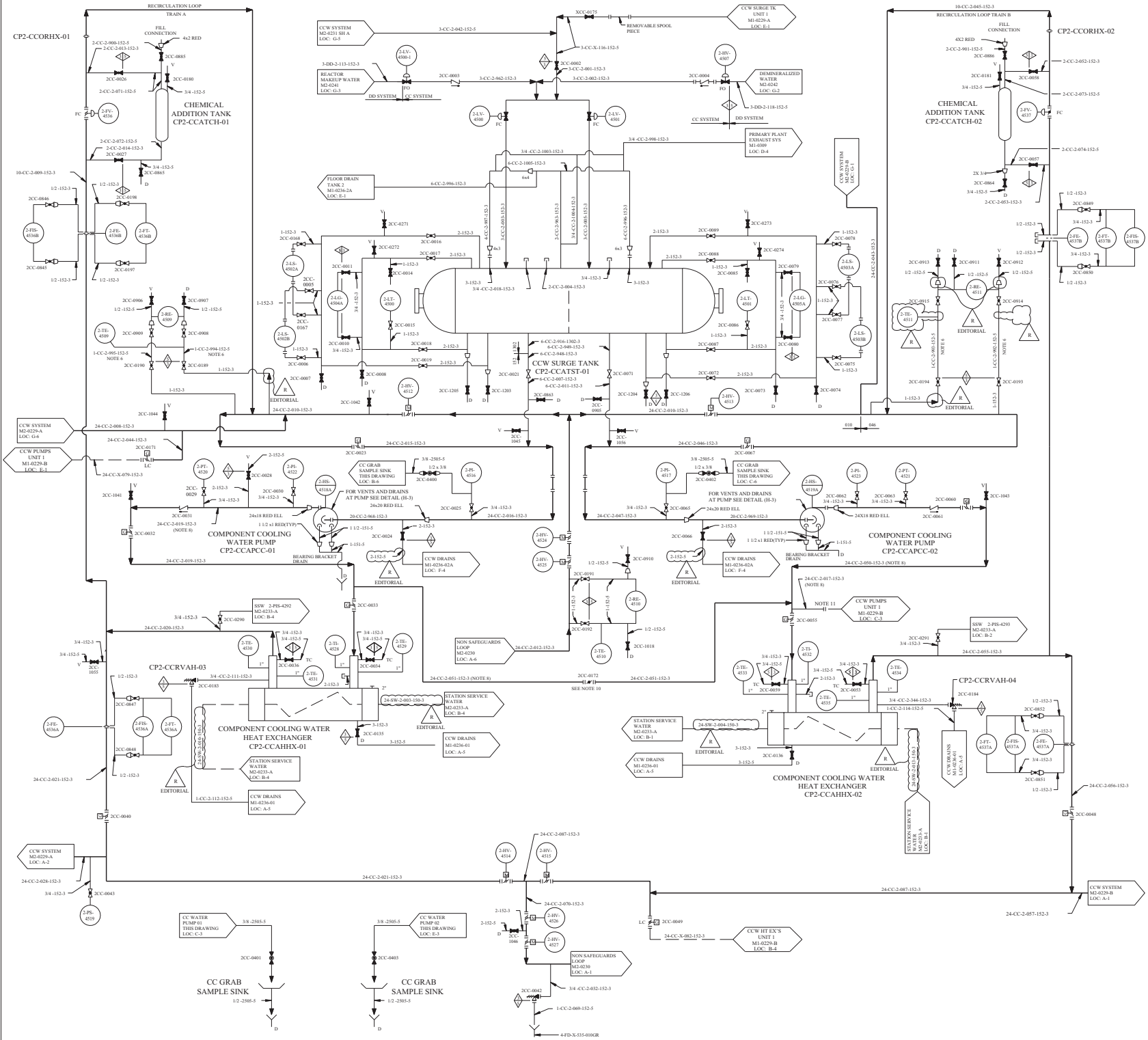

REV	DWN	CHKD	APVD	REMARKS
CP-19	MD 01-04-2005	DLA 01-04-2005		THIS DRAWING REVISED TO INCORPORATE DESIGN CHANGE FDA-2004-002932-01-00 PER SK-0001-04-002932-01-00. EDITORIAL CHANGES AS NOTED.

NOTES:

1. CCW SYSTEM IS SAFETY CLASS 3 EXCEPT AS NOTED.
2. DELETED
3. UNLESS OTHERWISE NOTED ALL DRAINS TO BE LOCALLY COLLECTED UNDER ADMINISTRATIVE CONTROL.
4. FLOW INDICATED AT ALL TEST CONNECTIONS. VENTS AND DRAINS SHOULD BE DIRECTED AWAY FROM THE PROCESS PIPING.
5. DURING UNIT 2 CONSTRUCTION, UNIT 2 PIPING IS TO BE PHYSICALLY ISOLATED FROM UNIT 1 PIPING BY REMOVAL OF A SPOOL PIECE TO PROVIDE AN INTERIM PIPING CONFIGURATION. BLIND FLANGES SHALL BE INSTALLED AS INDICATED ON DETAIL Y ON THE PIPING ISOMETRIC DRAWINGS. THE SPOOL PIECE, AFTER REMOVAL, SHALL BE STORED AS REQUIRED UNTIL RE-INSTALLATION.
6. PIPING HAS BEEN SEISMICALLY ANALYZED AND SUPPORTED.
7. DELETED
8. UNIT 2 LINE SHALL BE SHIELDED/LAGGED PER THE REQUIREMENTS PROVIDED IN PIPELINE DESIGNATION LIST, CPES-M-1017, PRIOR TO PRESSURIZATION (i.e. START-UP FLUSHING, HYDRO TESTING).
9. FOR MECHANICAL SYMBOLS AND NOTES SEE M1-0200.
10. 2CC-0172 CANNOT BE OPENED. THE VALVE HAS BEEN SEAL WELDED IN THE CLOSED POSITION AND THE HANDWHEEL HAS BEEN REMOVED.
11. BLIND FLANGE INSTALLED.
12. DELETED
13. DELETED

PUMP	A	B	C	D	E
CP2-CCAPCC-01	2CC-0232	2CC-0233	2CC-0234	2CC-0235	2CC-0236
CP2-CCAPCC-02	2CC-0237	2CC-0238	2CC-0239	2CC-0240	2CC-0241

PUMPS CP2-CCAPCC-01/02
VENTS AND DRAINS DETAIL

TYPICAL VENT CONNECTION
(UNLESS OTHERWISE NOTED)

TYPICAL DRAIN CONNECTION
(UNLESS OTHERWISE NOTED)

FSAR FIGURE 9.2-3

THIS DRAWING CREATED ELECTRONICALLY

DRAWING 2323-M2-0229 REV CP-4
HAS BEEN SPLIT INTO THE FOLLOWING SHEETS:
M2-0229
M2-0229-A
M2-0229-B

CLASS I
(NUCLEAR SAFETY-RELATED)
SAFETY CLASS 1
SAFETY CLASS 2
SAFETY CLASS 3
SEISMIC CATEGORY I
CLASS 1E
ASSOCIATED CIRCUITS

TXU POWER
CPSES
GLEN ROSE, TEXAS

FLOW DIAGRAM
COMPONENT COOLING WATER SYSTEM

DWG. NO. M2-0229 | SH. NO. - | REV. CP-19

FINAL PRINT

REF CKD 11/25/97 CP-13

me599900.dgn M2-0229

REV	DWN	CHK	APVD	REMARKS
CP-14	DJK 10-22-2012	GAW 10-22-2012		THIS DRAWING REVISED TO INCORPORATE DESIGN CHANGE FDA 2012-000187-01-00 PER SK-0003-12-000187-01-00.

NOTES:

1. CCW SYSTEM IS SAFETY CLASS 3 EXCEPT AS NOTED.
2. FLOW INDICATED AT ALL TEST CONNECTIONS, VENTS AND DRAINS SHOULD BE DIRECTED AWAY FROM THE PROCESS PIPING.
3. DELETED
4. UNLESS OTHERWISE NOTED, ALL DRAINS TO BE LOCALLY COLLECTED UNDER ADMINISTRATIVE CONTROL.
5. ALL VALVES IDENTIFIED AS LIP SHALL BE LOCKED IN POSITION IMMEDIATELY AFTER FINAL BALANCING TO ENSURE THROTTLED POSITION IS MAINTAINED.
6. DELETED
7. FOR MECHANICAL SYMBOLS AND NOTES SEE M1-0200.
8. THIS IS A UNIT ISOLATION VALVE WHICH SHALL BE LOCKED CLOSED WHEN CCW IS SUPPLIED FROM UNIT 1, AND OPEN WHEN SUPPLIED FROM UNIT 2.
9. DELETED
10. VALVES 2CC0107 AND 2CC0109 ARE MODIFIED DISCS THAT FUNCTION AS RESTRICTIVE ORIFICES. THEY CANNOT BE USED FOR ISOLATION PURPOSES.

TYPICAL VENT DETAIL
(UNLESS OTHERWISE NOTED)

TYPICAL DRAIN DETAIL
(UNLESS OTHERWISE NOTED)

TYPICAL TEST CONNECTION DETAIL
(UNLESS OTHERWISE NOTED)

FSAR FIGURE 9.2-3

THIS DRAWING CREATED ELECTRONICALLY

DRAWING 2323-M2-0229 REV CP-4
HAS BEEN SPLIT INTO THE FOLLOWING SHEETS:
M2-0229
M2-0229-A
M2-0229-B

CLASS I
(NUCLEAR SAFETY-RELATED)
SAFETY CLASS 1 — SEISMIC CATEGORY I
SAFETY CLASS 2 — CLASS 1E
SAFETY CLASS 3 — ASSOCIATED CIRCUITS

LUMINANT
CPNPP
GLEN ROSE, TEXAS

FLOW DIAGRAM
COMPONENT COOLING WATER SYSTEM
SHEET 2 OF 7

DWG. NO.	SH. NO.	REV.
M2-0229	A	CP-14

$$$$$$$$DATE$$$$$$$$

me486300.dgn M2-0229-A < FINAL PRINT >

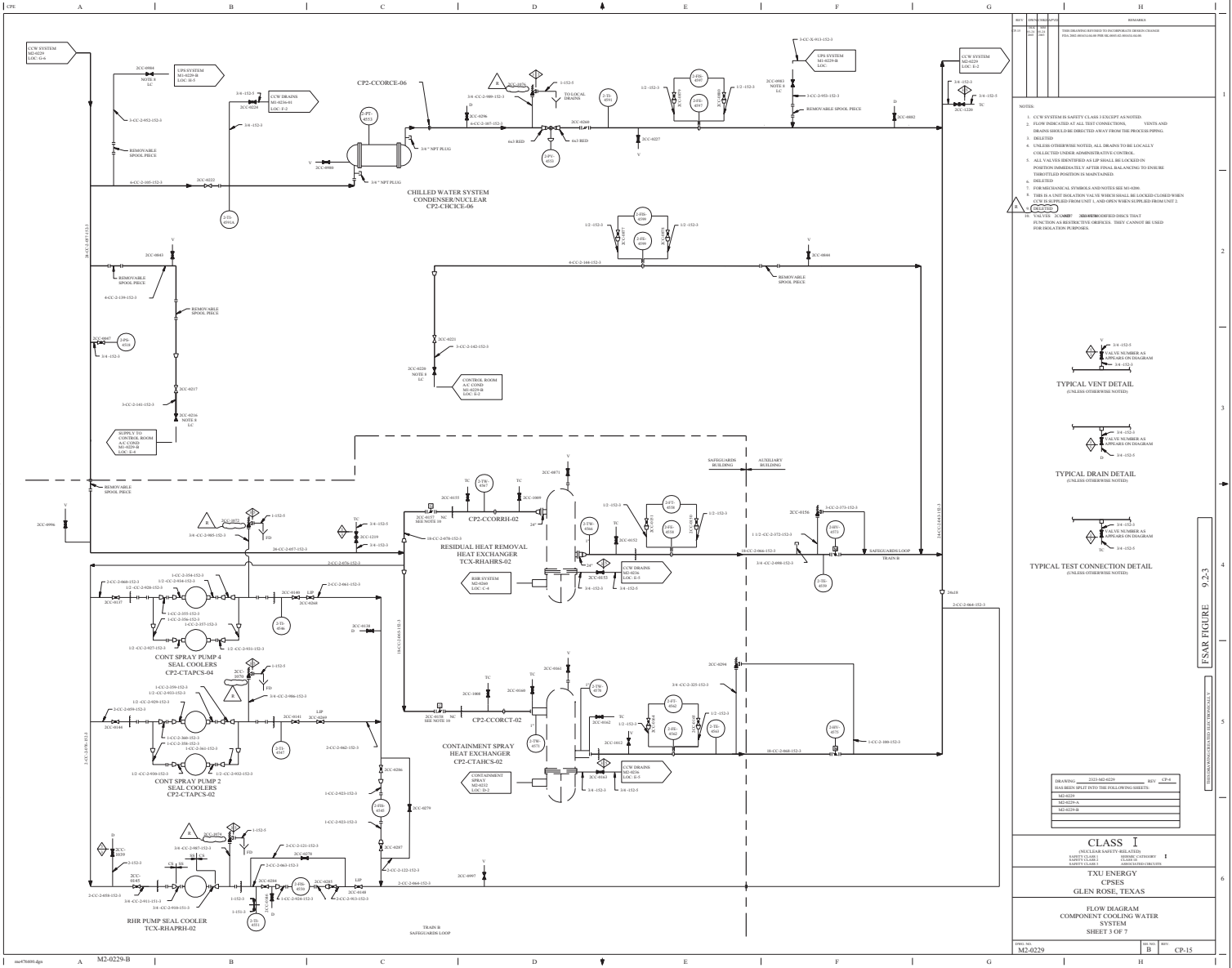

REV #	DATE	DRAFTER	APPROVED	REMARKS
CP-15	10/31/02	TMH	TGH	THIS DRAWING REVISED TO INCORPORATE DESIGN CHANGE FDA 2002-00010-02-00 PER SIL-00105-02-00010-00-00

NOTES:

1. CCW SYSTEM IS SAFETY CLASS 3 EXCEPT AS NOTED.
2. FLOW INDICATED AT ALL TEST CONNECTIONS, VENTS AND DRAINS SHOULD BE DIRECTED AWAY FROM THE PROCESS PIPING.
3. DELETED
4. UNLESS OTHERWISE NOTED, ALL DRAINS TO BE LOCALLY COLLECTED UNDER ADMINISTRATIVE CONTROL.
5. ALL VALVES IDENTIFIED AS LIP SHALL BE LOCKED IN POSITION IMMEDIATELY AFTER FINAL BALANCING TO INSURE THROTTLED POSITION IS MAINTAINED.
6. DELETED
7. FOR MECHANICAL SYMBOLS AND NOTES SEE M1-0200.
8. THIS IS A UNIT ISOLATION VALVE WHICH SHALL BE LOCKED CLOSED WHEN CCW IS SUPPLIED FROM UNIT 1, AND OPEN WHEN SUPPLIED FROM UNIT 2.
9. DELETED
10. VALVES 2CC-6007 AND 2CC-6008 HAVE MODIFIED DISCS THAT FUNCTION AS RESTRICTIVE ORIFICES. THEY CANNOT BE USED FOR ISOLATION PURPOSES.

FSAR FIGURE 9.2-3

THIS DRAWING CREATED FULL DIGITALLY

DRAWING 2323-M2-0229 REV CP-4
HAS BEEN SPLIT INTO THE FOLLOWING SHEETS:
M2-0229
M2-0229-A
M2-0229-B

CLASS I
(NUCLEAR SAFETY-RELATED)
SAFETY CLASS 1 SEISMIC CATEGORY I
SAFETY CLASS 2
SAFETY CLASS 3 ASSOCIATED CIRCUITS

TXU ENERGY
CPSES
GLEN ROSE, TEXAS

FLOW DIAGRAM
COMPONENT COOLING WATER SYSTEM
SHEET 3 OF 7

DWG. NO. M2-0229 | SH. NO. B | REV. CP-15

M2-0229-B

mn476690.dgn

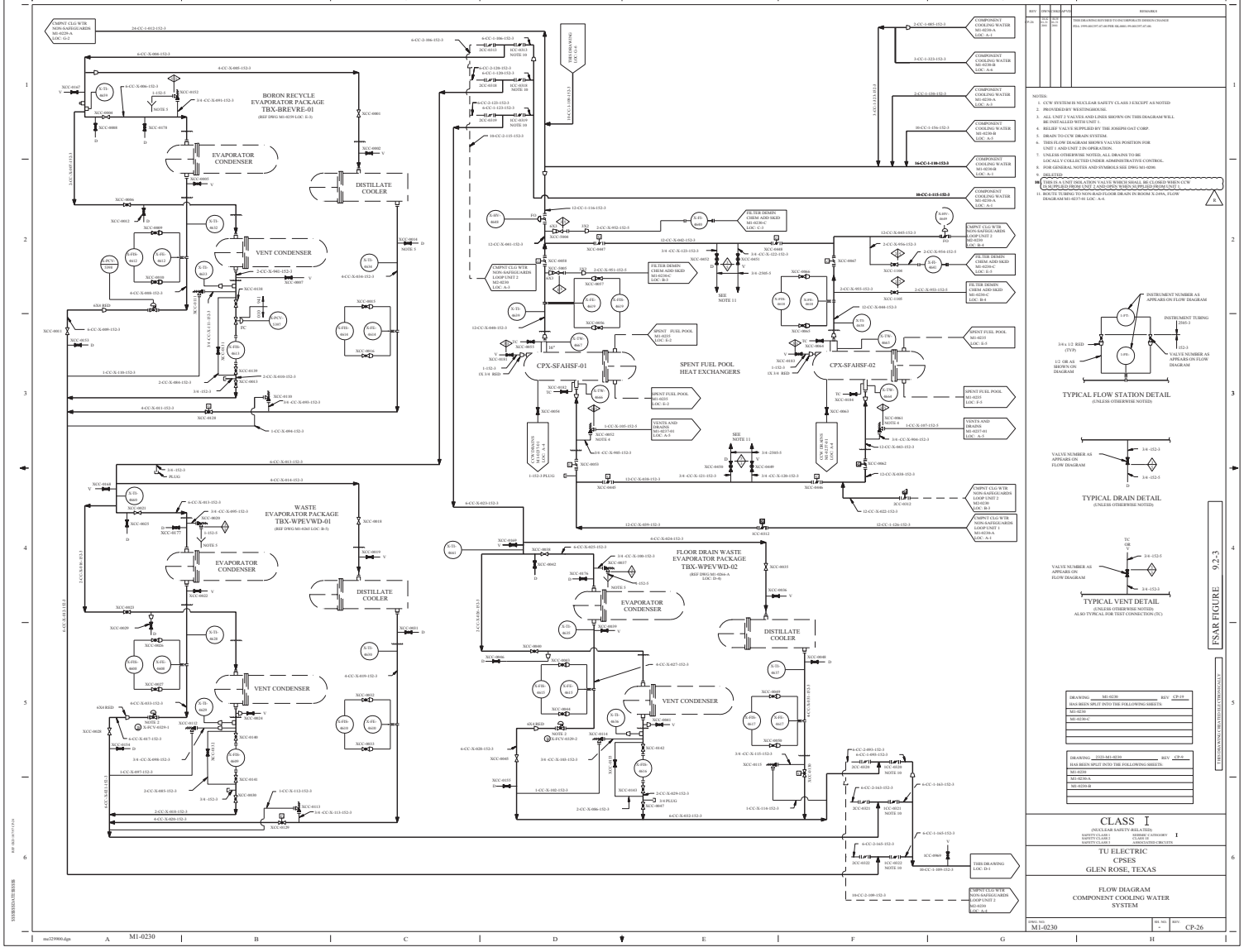

REV | DWN | CHK | APP'D | REMARKS

P.Chg. | Vend. Info | Rev'd Info | Rev'd Info | THIS DRAWING REVISED TO INCORPORATE DESIGN CHANGE FCL 1999-0425-077, 07-30-1999, DE, DRG. 99-0425-077, 07-30-

NOTES:
1. CCW SYSTEM IS NUCLEAR SAFETY CLASS 3 EXCEPT AS NOTED
2. PROVIDED BY WESTINGHOUSE
3. ALL UNIT 2 VALVES AND LINES SHOWN ON THIS DIAGRAM WILL BE INSTALLED WITH UNIT 1.
4. RELIEF VALVE SUPPLIED BY THE JOSEPH OAT CORP.
5. DRAIN TO CCW DRAIN SYSTEM.
6. THIS FLOW DIAGRAM SHOWS VALVES POSITION FOR UNIT 1 AND UNIT 2 IN OPERATION.
7. UNLESS OTHERWISE NOTED, ALL DRAINS TO BE LOCALLY COLLECTED UNDER ADMINISTRATIVE CONTROL.
8. FOR GENERAL NOTES AND SYMBOLS SEE DWG M1-0200.
9. DELETED
10. THIS IS A UNIT ISOLATION VALVE WHICH SHALL BE CLOSED WHEN CCW IS SUPPLIED FROM UNIT 2 AUXILIARY BUILDING HEADER (SOV-3)
11. ROUTE TUBING TO NON-RAD FLOOR DRAIN IN ROOM X-249A, FLOW DIAGRAM M1-0237-01 LOC: A-6

DRAWING M1-0230 REV CP-19
HAS BEEN SPLIT INTO THE FOLLOWING SHEETS:
M1-0230
M1-0230-C

DRAWING 2323-M1-0230 REV CP-9
HAS BEEN SPLIT INTO THE FOLLOWING SHEETS:
M1-0230
M1-0230-A
M1-0230-B

CLASS I
(NUCLEAR SAFETY-RELATED)
SAFETY CLASS 1 — QUALITY CATEGORY I
SAFETY CLASS 2 — SEISMIC II
SAFETY CLASS 3 — ASSOCIATED CIRCUITS

TU ELECTRIC
CPSES
GLEN ROSE, TEXAS

FLOW DIAGRAM
COMPONENT COOLING WATER SYSTEM

DRWG. NO. M1-0230 | SH. NO. — | REV. CP-26

FSAR FIGURE 9.2-3

CONTROLLED DOCUMENT

M1-0230

mu3299000.dgn

REV.	DWN	CHKD	APVD	REMARKS
CP-22	DLK 07-03-2014			THIS DRAWING REVISED TO INCORPORATE AI-CR-2014-007702-1 TO EDITORIALLY CORRECT THE LOCATION OF VALVE 1CC-1038 TO AGREE WITH BRP-CC-1-TR-002 REV CP-3. EDITORIAL CHANGES AS NOTED.

NOTES:

1. CCW SYSTEM IS NUCLEAR SAFETY CLASS 3 EXCEPT AS NOTED.
2. UNLESS OTHERWISE NOTED ALL DRAINS TO BE LOCALLY COLLECTED UNDER ADMINISTRATIVE CONTROL.
3. ALL UNIT 2 VALVES AND LINES SHOWN ON THIS DIAGRAM WILL BE INSTALLED WITH UNIT 1.
4. (T) INDICATES SELF-CONTAINED □° THERMOSTATIC VALVE VENDOR SUPPLIED ITEM.
5. ALL VALVES IDENTIFIED AS LIP SHALL BE LOCKED IN POSITION IMMEDIATELY AFTER FINAL BALANCING TO ENSURE THROTTLED POSITION IS MAINTAINED.
6. * INDICATES VENDOR SUPPLIED ITEM.
7. PROVIDED BY FIELD.
8. DRAIN TO CCW DRAIN SYSTEM.
9. THIS FLOW DIAGRAM SHOWS VALVES POSITION FOR UNIT 1 AND UNIT 2 IN OPERATION.
10. FOR GENERAL NOTES AND SYMBOLS SEE DRAWING M1-0200.
11. VALVE CLOSED WHEN COMPRESSOR IS ON. VALVE OPEN WHEN COMPRESSOR IS OFF.
12. VALVE OPEN WHEN COMPRESSOR IS ON. VALVE CLOSED WHEN COMPRESSOR IS OFF.
13. VALVE THROTTLED, OPERATOR DEGRADED.
14. SYSTEM DRAINED BETWEEN XCC-0161 AND XCC-0162 WHILE IN LAYUP. REFERENCE FDA-2002-0162-05-01.
15. SYSTEM DRAINED BETWEEN XCC-0170 AND XCC-0173 WHILE IN LAYUP. REFERENCE FDA-2002-0162-05-01.

TYPICAL FLOW STATION DETAIL
(UNLESS OTHERWISE NOTED)

TYPICAL DRAIN DETAIL
(UNLESS OTHERWISE NOTED)

TYPICAL VENT DETAIL
(UNLESS OTHERWISE NOTED)
TYPICAL ALSO FOR TEST CONNECTION (TC)

FSAR FIGURE 9.2-3

THIS DRAWING CREATED ELECTRONICALLY

DRAWING 2323-M1-0230 REV CP-9
HAS BEEN SPLIT INTO THE FOLLOWING SHEETS:

M1-0230
M1-0230-A
M1-0230-B

CLASS I
(NUCLEAR SAFETY-RELATED)
SAFETY CLASS 1 — SEISMIC CATEGORY I
SAFETY CLASS 2 — CLASS 1E
SAFETY CLASS 3 — ASSOCIATED CIRCUITS

LUMINANT
CPNPP
GLEN ROSE, TEXAS

FLOW DIAGRAM
COMPONENT COOLING WATER SYSTEM

DWG. NO.	SH. NO.	REV.
M1-0230	A	CP-22

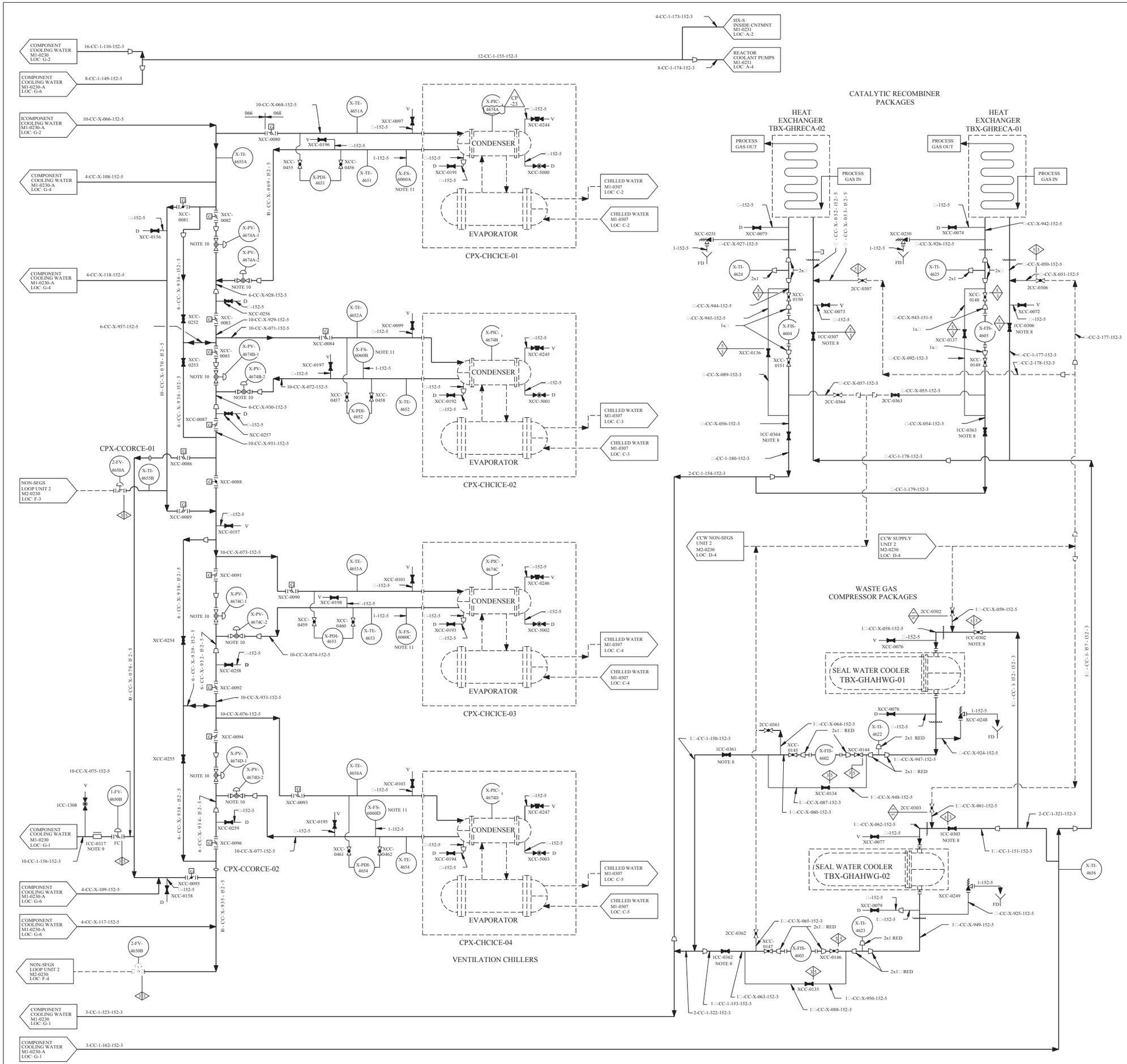

REV	DWN	CHK	APVD	REMARKS
CP-23	DLK 01-26-2015			THIS DRAWING REVISED TO INCORPORATE AI-CR-2015-000645-1 TO EDITORIALLY CORRECT LOCATION (TAG) NUMBER X-PIC-4674 TO X-PIC-4674A.

NOTES:

1. CCW SYSTEM IS NUCLEAR SAFETY CLASS 3 EXCEPT AS NOTED.
2. ALL UNIT 2 VALVES AND LINES SHOWN ON THIS DIAGRAM WILL BE INSTALLED WITH UNIT 1.
3. THIS FLOW DIAGRAM SHOWS VALVES POSITION FOR UNIT 1 AND UNIT 2 IN OPERATION.
4. DELETED
5. UNLESS OTHERWISE NOTED ALL DRAINS TO BE LOCALLY COLLECTED UNDER ADMINISTRATIVE CONTROL.
6. DELETED
7. FOR GENERAL NOTES AND SYMBOLS SEE DWG M1-0200.
8. THIS IS A UNIT ISOLATION VALVE WHICH SHALL BE CLOSED WHEN CCW IS SUPPLIED FROM UNIT 2 AND OPEN WHEN SUPPLIED FROM UNIT 1.
9. REMOVE CHECK VALVE 1CC-0317 INTERNALS, ABANDON BODY IN PLACE PER DCN 6533 REV 0.
10. VALVE ACTUATORS WILL BE LOCKED AND REMAIN IN THEIR LAST POSITION ON LOSS OF INSTRUMENT AIR ABOVE THE DIAPHRAGM. THE BYPASS VALVES WILL FAIL CLOSED AND THE INLET VALVES WILL FAIL OPEN ON LOSS OF SIGNAL FROM THE VENTILATION CHILLER CONDENSER PRESSURE INDICATING CONTROLLER.
11. FLOW SWITCH X-FS-6060A, X-FS-6060B, X-FS-6060C, AND X-FS-6060D ARE SPARED IN PLACE.

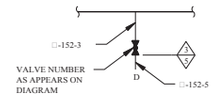

TYPICAL DRAIN DETAIL
(UNLESS OTHERWISE NOTED)

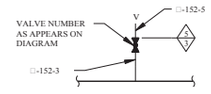

TYPICAL VENT DETAIL
(UNLESS OTHERWISE NOTED)

FSAR FIGURE 9.2-3

THIS DRAWING CREATED ELECTRONICALLY

DRAWING 2323-M1-0230 REV CP-9
HAS BEEN SPLIT INTO THE FOLLOWING SHEETS:
M1-0230
M1-0230-A
M1-0230-B

CLASS I
(NUCLEAR SAFETY-RELATED)
SAFETY CLASS 1 — SEISMIC CATEGORY I
SAFETY CLASS 2 — CLASS 1E
SAFETY CLASS 3 — ASSOCIATED CIRCUITS

LUMINANT
CPNPP
GLEN ROSE, TEXAS

FLOW DIAGRAM
COMPONENT COOLING WATER
SYSTEM
SHEET 6 OF 8

DWG. NO. M1-0230 | SH. NO. B | REV. CP-23

SSSSSSSDATESSSSSS

REV	DWN	CHKD	APVD	REMARKS
CP-8	JRMC 07-30 2008	DJL 07-31 2008		THIS DRAWING REVISED TO INCORPORATE DESIGN CHANGE FDA-2008-002401-01-00 PER SK-0001-08-002401-01-00.

NOTES:

1. CCW SYSTEM IS NUCLEAR SAFETY CLASS 3 EXCEPT AS NOTED.
2. DELETED
3. THIS FLOW DIAGRAM SHOWS VALVES POSITION FOR UNIT 1 AND UNIT 2 IN OPERATION.
4. UNLESS OTHERWISE NOTED, ALL DRAINS TO BE LOCALLY COLLECTED UNDER ADMINISTRATIVE CONTROL.
5. FOR GENERAL NOTES AND SYMBOLS SEE DWG M1-0200.

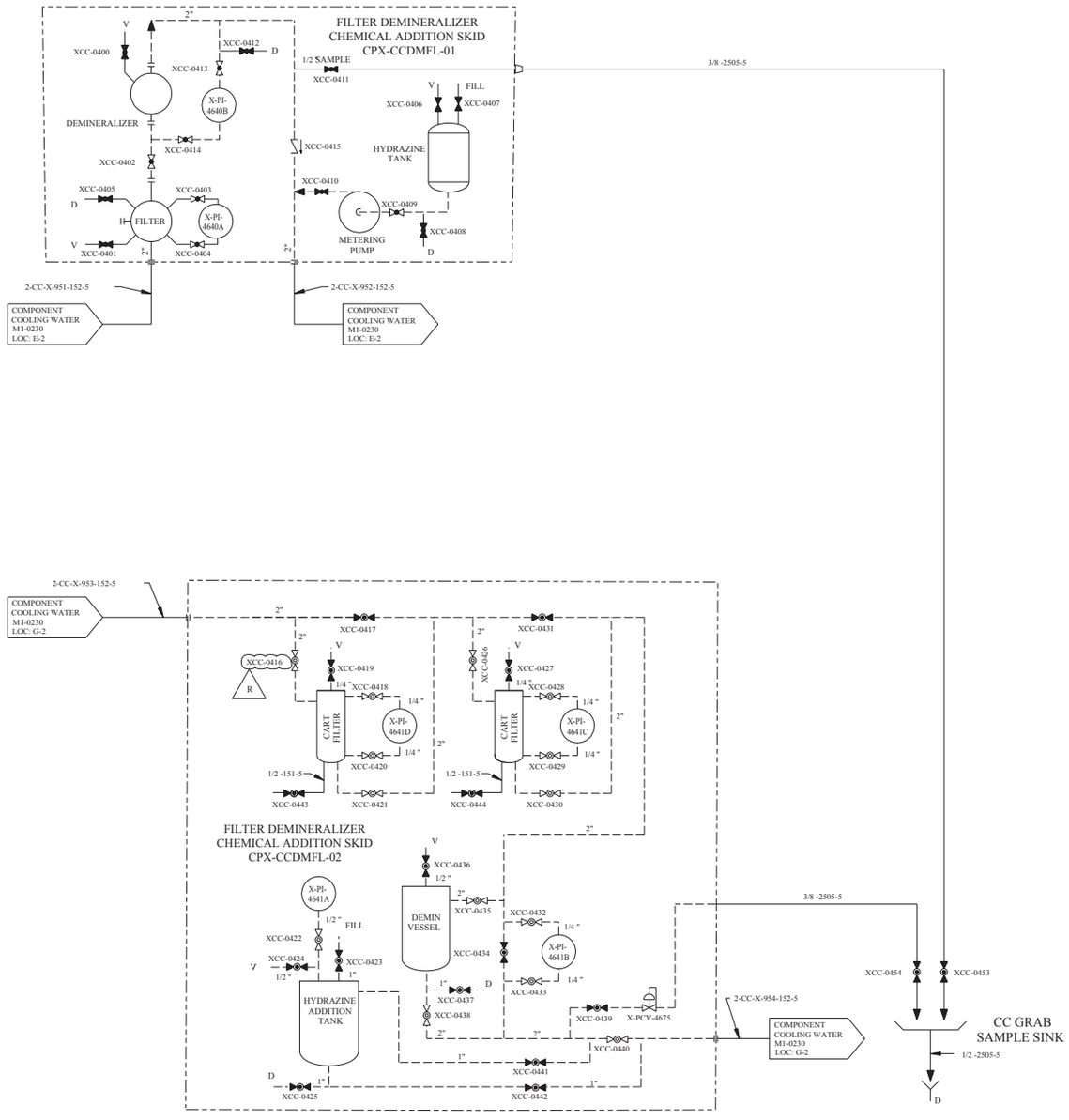

FSAR FIGURE 9.2-3

THIS DRAWING CREATED ELECTRONICALLY

DRAWING M1-0230 REV CP-19
HAS BEEN SPLIT INTO THE FOLLOWING SHEETS:
M1-0230
M1-0230-C

CLASS

LUMINANT
CPNPP
GLEN ROSE, TEXAS

FLOW DIAGRAM
COMPONENT COOLING WATER
SYSTEM

DWG. NO.	SH. NO.	REV.
M1-0230	C	CP-8

REF CHKD 7/20/2001

$$$$$$$DATE$$$$$$

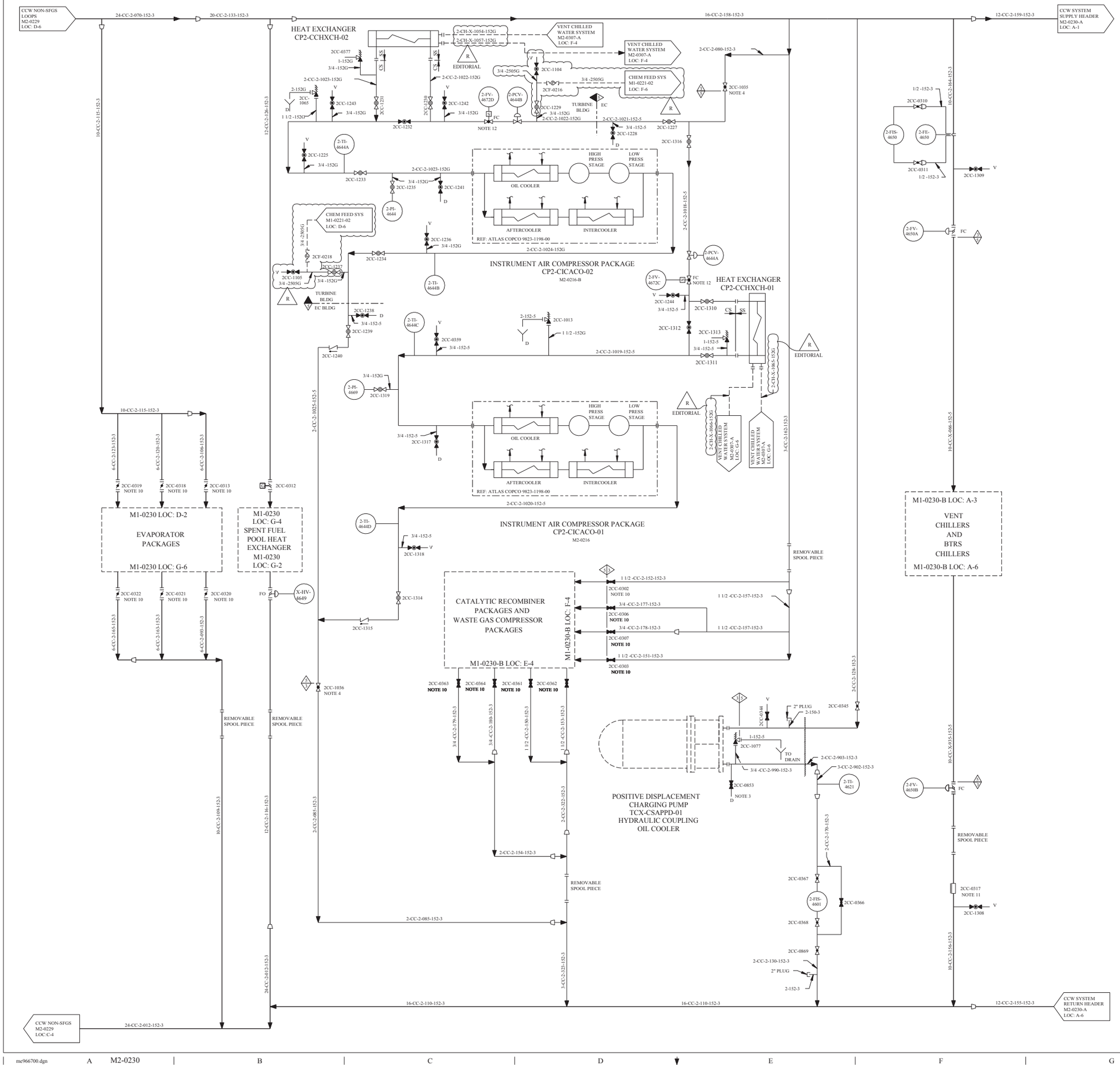

REV	DWN	CHKD	APVD	REMARKS
CP-19	DLK 10-05-2009	MM 10-05-2009		THIS DRAWING REVISED TO INCORPORATE DESIGN CHANGE EDA 2008-002537-01-00 PER SK-0003-08-002537-01-00. EDITORIAL CHANGES AS NOTED.

NOTES:

1. DELETED
2. DELETED
3. UNLESS OTHERWISE NOTED ALL DRAINS TO BE LOCALLY COLLECTED UNDER ADMINISTRATIVE CONTROL.
4. VALVES 2CC-1035 AND 2CC-1036 (FORMERLY 2-HV-4663A AND 2-HV-4663B) HAVE HAD AIR SUPPLIES REMOVED AND ARE NOW OPERATED MANUALLY.
5. FLOW INDICATED AT ALL CONNECTIONS, VENTS AND DRAINS SHOULD BE DIRECTED AWAY FROM THE PROCESS PIPING.
6. DELETED
7. DELETED
8. DELETED
9. FOR MECHANICAL SYMBOLS AND NOTES SEE M1-0200.
10. THIS IS A UNIT ISOLATION VALVE WHICH SHALL BE CLOSED WHEN CCW IS SUPPLIED FROM UNIT 1 AND OPEN WHEN SUPPLIED FROM UNIT 2.
11. CHECK VALVE INTERNAL REMOVED, VALVE BODY ABANDONED IN PLACE.
12. VALVE OPEN WHEN COMPRESSOR IS ON. VALVE CLOSED WHEN COMPRESSOR IS OFF.
13. DELETED
14. DELETED

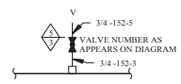

TYPICAL VENT DETAIL
(UNLESS OTHERWISE NOTED)

TYPICAL DRAIN DETAIL
(UNLESS OTHERWISE NOTED)

FSAR FIGURE 9.2-3

THIS DRAWING CREATED ELECTRONICALLY

DRAWING 2323-M2-0230 REV CP-2
HAS BEEN SPLIT INTO THE FOLLOWING SHEETS:
M2-0230
M2-0230-A

CLASS I
(NUCLEAR SAFETY-RELATED)
SAFETY CLASS 1 — SEISMIC CATEGORY I
SAFETY CLASS 2 — CLASS 1E
SAFETY CLASS 3 — ASSOCIATED CIRCUITS

LUMINANT
CPNPP
GLEN ROSE, TEXAS

FLOW DIAGRAM
COMPONENT COOLING WATER SYSTEM
SHEET 4 OF 7

DWG. NO.	SH. NO.	REV.
M2-0230	-	CP-19

$$$$$$$$DATE$$$$$$ REF CHK'D 5-20-08 (CP-11

me966700.dgn A M2-0230 B C D E F G < FINAL PRINT > H

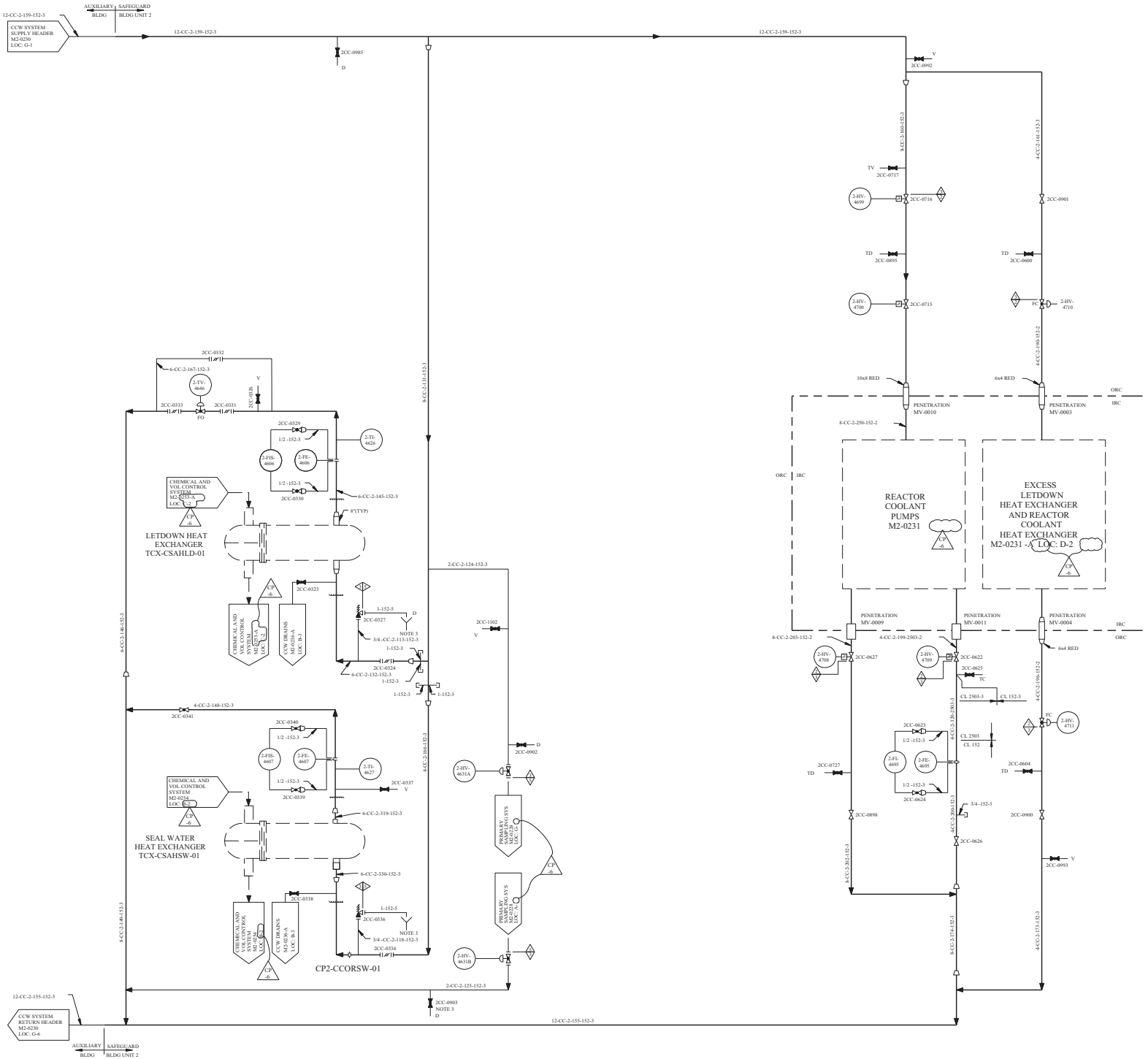

REV.	DWN	CHKD	APVD	REMARKS
CP-6	S.A. 11/02/1996			THIS DRAWING REVISED TO INCORPORATE EDITORIAL CHANGES AS NOTED.

NOTES

1. * INDICATES VENDOR SUPPLIED ITEM.
2. UNLESS OTHERWISE NOTED ALL DRAINS TO BE LOCALLY COLLECTED
3. UNDER ADMINISTRATIVE CONTROL.
4. FLOW INDICATED AT ALL TEST CONNECTIONS, VENTS AND DRAINS SHOULD BE DIRECTED AWAY FROM THE PROCESS PIPING.
5. FOR MECHANICAL SYMBOLS AND NOTES SEE DWG M1-0200.

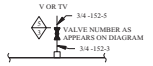

TYPICAL VENT DETAIL
(UNLESS OTHERWISE NOTED)

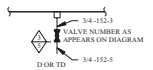

TYPICAL DRAIN DETAIL
(UNLESS OTHERWISE NOTED)

FSAR FIGURE 9.2-3

THIS DRAWING CREATED ELECTRONICALLY

DRAWING 2323-M2-0230 REV. CP-2
HAS BEEN SPLIT INTO THE FOLLOWING SHEETS:
M2-0230
M2-0230-A

CLASS I
(NUCLEAR SAFETY-RELATED)
SAFETY CLASS 1 — SEISMIC CATEGORY I
SAFETY CLASS 2 — CLASS 1E
SAFETY CLASS 3 — ASSOCIATED CIRCUITS

TXU ELECTRIC
CPSES
GLEN ROSE, TEXAS

FLOW DIAGRAM
COMPONENT COOLING WATER SYSTEM

CP -6

DWG. NO.	SH. NO.	REV.
M2-0230	A	CP-6

REF CKD CP6 11-1-96

SSSSSSSTA\TESSSSSS

vs0000tg.dgn

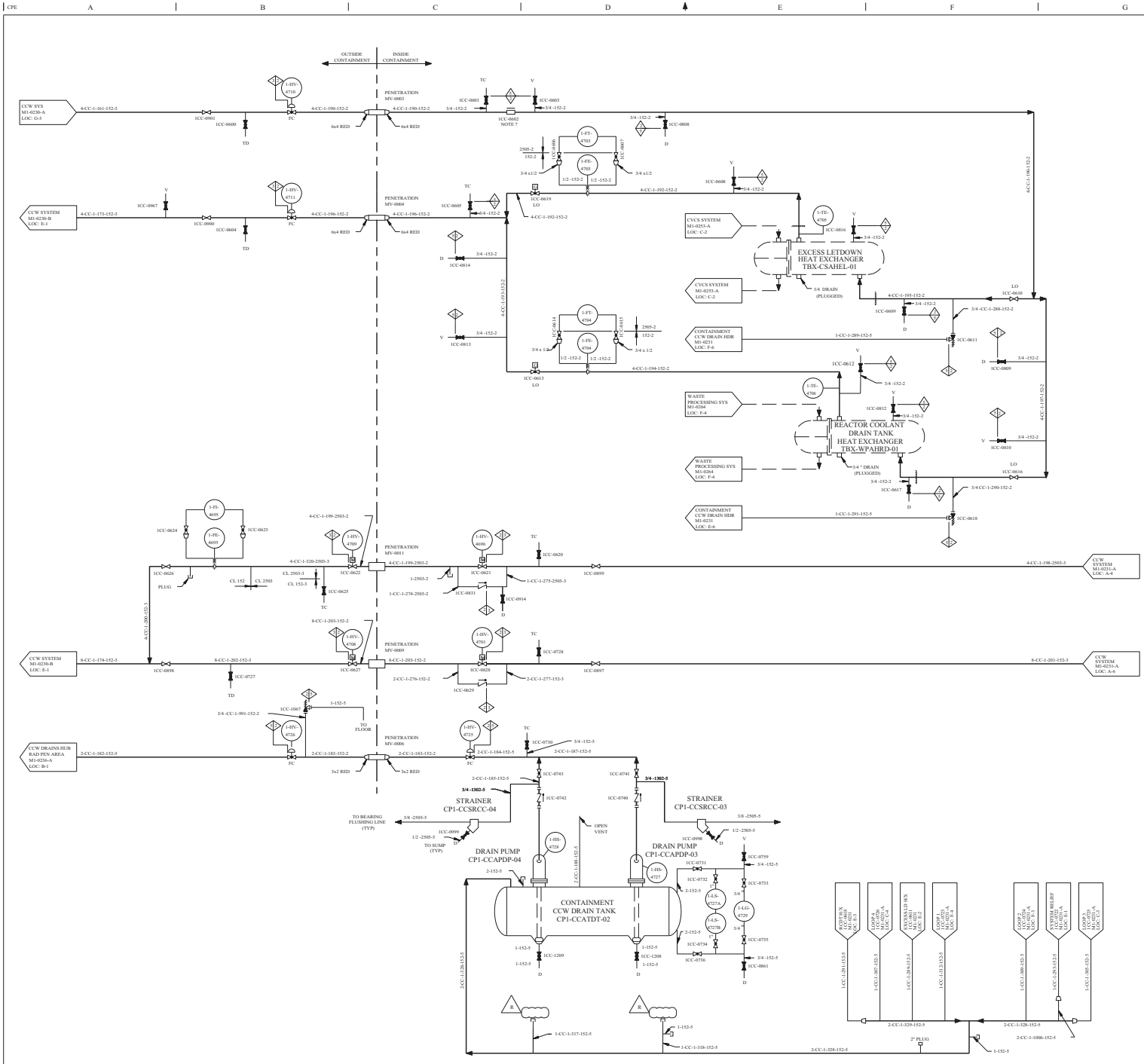

REV	DWN	CHKD	APVD	REMARKS
CP-24	SJL 12-11-2001	CJL 12-11-2001		THIS DRAWING REVISED TO INCORPORATE DESIGN CHANGE FDA-2001-002002-01-00 PER SK-0001-01-002002-01-00.

NOTES:

1. CCW SYSTEM IS SAFETY CLASS 3 EXCEPT AS NOTED.
2. DRAIN LINES, UNLESS OTHERWISE NOTED, MAY BE ROUTED TO THE CONTAINMENT CCW DRAIN TANK HEADER.
3. DELETED.
4. THIS FLOW DIAGRAM SHOWS VALVES POSITION FOR UNIT 1 AND UNIT 2 IN OPERATION.
5. DELETED
6. FOR GENERAL NOTES AND SYMBOLS SEE DWG M1-0200.
7. REMOVE CHECK VALVE 1CC-0602 INTERNALS, ABANDON BODY IN PLACE PER DCN 6534 REV 0.

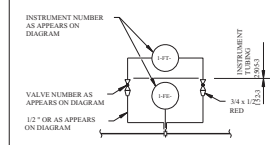

TYPICAL FLOW STATION DETAIL (UNLESS OTHERWISE NOTED)

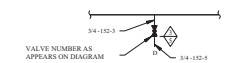

TYPICAL DRAIN DETAIL (UNLESS OTHERWISE NOTED)

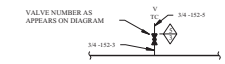

TYPICAL VENT AND TEST CONNECTION DETAIL (UNLESS OTHERWISE NOTED)

FSAR FIGURE 9.2-3

THIS DRAWING CREATED ELECTRONICALLY

DRAWING 2323-M1-0231 REV CP-7
HAS BEEN SPLIT INTO THE FOLLOWING SHEETS:
M1-0231
M1-0231-A

CLASS I
(NUCLEAR SAFETY-RELATED)
SAFETY CLASS 1 SEISMIC CATEGORY I
SAFETY CLASS 2 CLASS II
SAFETY CLASS 3 ASSOCIATED CIRCUITS

TXU ELECTRIC
CPSES
GLEN ROSE, TEXAS

FLOW DIAGRAM
COMPONENT COOLING WATER SYSTEM

DWG. NO. M1-0231 SH. NO. - REV. CP-24

REF CKD CP-20 11-13-96

SSSSSSDATESSSSS

me371600.dgn M1-0231

REV	DWN	CHK	APVD	REMARKS
CP-14	DLK 04-01 2014	SM 04-01 2014		THIS DRAWING REVISED TO INCORPORATE DESIGN CHANGE FDA-2014-0000055-01-00 PER SK-0001-14-000055-01-00.

NOTES:

1. CCW SYSTEM IS SAFETY CLASS 3 EXCEPT AS NOTED.
2. DRAIN LINES, UNLESS OTHERWISE NOTED, MAY BE ROUTED TO THE CONTAINMENT CCW DRAIN TANK HEADER.
3. DELETED
4. DELETED
5. FOR GENERAL NOTES AND SYMBOLS SEE DWG M1-0200.
6. DELETED

INSTRUMENT NUMBER AS APPEARS ON DIAGRAM

VALVE NUMBER AS APPEARS ON DIAGRAM

1-FT-

1-FE-

□-□ OR AS APPEARS ON DIAGRAM

□-□ RED

INSTRUMENT TUBING 2505-3 I2-3

TYPICAL FLOW STATION DETAIL (UNLESS OTHERWISE NOTED)

VALVE NUMBER AS APPEARS ON DIAGRAM

□-152-3/□-2503-3

□-152-5/□-2503-5

TYP DRAIN DETAIL (UNLESS OTHERWISE NOTED)

VALVE NUMBER AS APPEARS ON DIAGRAM

□-152-5/□-2503-5

□-152-3/□-2503-3

TYP VENT DETAIL (UNLESS OTHERWISE NOTED)

FSAR FIGURE 9.2-3

THIS DRAWING CREATED ELECTRONICALLY

DRAWING 2323-M1-0231 REV CP-7

HAS BEEN SPLIT INTO THE FOLLOWING SHEETS:

M1-0231

M1-0231-A

CLASS I

(NUCLEAR SAFETY-RELATED)

SAFETY CLASS 1 — SEISMIC CATEGORY I
SAFETY CLASS 2 — CLASS 1E
SAFETY CLASS 3 — ASSOCIATED CIRCUITS

LUMINANT
CPNPP
GLEN ROSE, TEXAS

FLOW DIAGRAM
COMPONENT COOLING WATER
SYSTEM

DWG. NO. M1-0231 | SH. NO. A | REV. CP-14

< FINAL PRINT >

CPE

REF CKD 4/23/98 CP-9

$$$$$$$$DATE$$$$$$$$

mc371400.dgn

M1-0231-A

REV	DWN	CHKD	APVD	REMARKS
CP-16	EES 06-04 2007	MHF 06-04 2007		THIS DRAWING REVISED TO INCORPORATE DESIGN CHANGE FDA 1999-003465-06-00 PER SK-0006-99-003465-06-00.

NOTES:

1. CCW SYSTEM IS SAFETY CLASS 3 EXCEPT AS NOTED.
2. DRAIN LINES, UNLESS OTHERWISE NOTED, MAY BE ROUTED TO THE CONTAINMENT CCW DRAIN TANK HEADER.
3. FOR GENERAL NOTES AND SYMBOLS SEE DWG M1-0200.
4. FLOW INDICATED AT ALL TEST CONNECTIONS, VENTS AND DRAINS SHOULD BE DIRECTED AWAY FROM THE PROCESS PIPING.

TYPICAL VENT DETAIL
(UNLESS OTHERWISE NOTED)

TYPICAL DRAIN DETAIL
(UNLESS OTHERWISE NOTED)

FSAR FIGURE 9.2-3

THIS DRAWING CREATED ELECTRONICALLY

DRAWING 2323-M2-0231 REV CP-2
HAS BEEN SPLIT INTO THE FOLLOWING SHEETS:
M2-0231
M2-0231-A

CLASS I
(NUCLEAR SAFETY-RELATED)
SAFETY CLASS 1 SEISMIC CATEGORY I
SAFETY CLASS 2 CLASS 1E
SAFETY CLASS 3 ASSOCIATED CIRCUITS

LUMINANT
CPSES
GLEN ROSE, TEXAS

FLOW DIAGRAM
COMPONENT COOLING WATER
SYSTEM

DWG. NO. M2-0231 | SH. NO. - | REV. CP-16

me873300.dgn M2-0231 FINAL PRINT

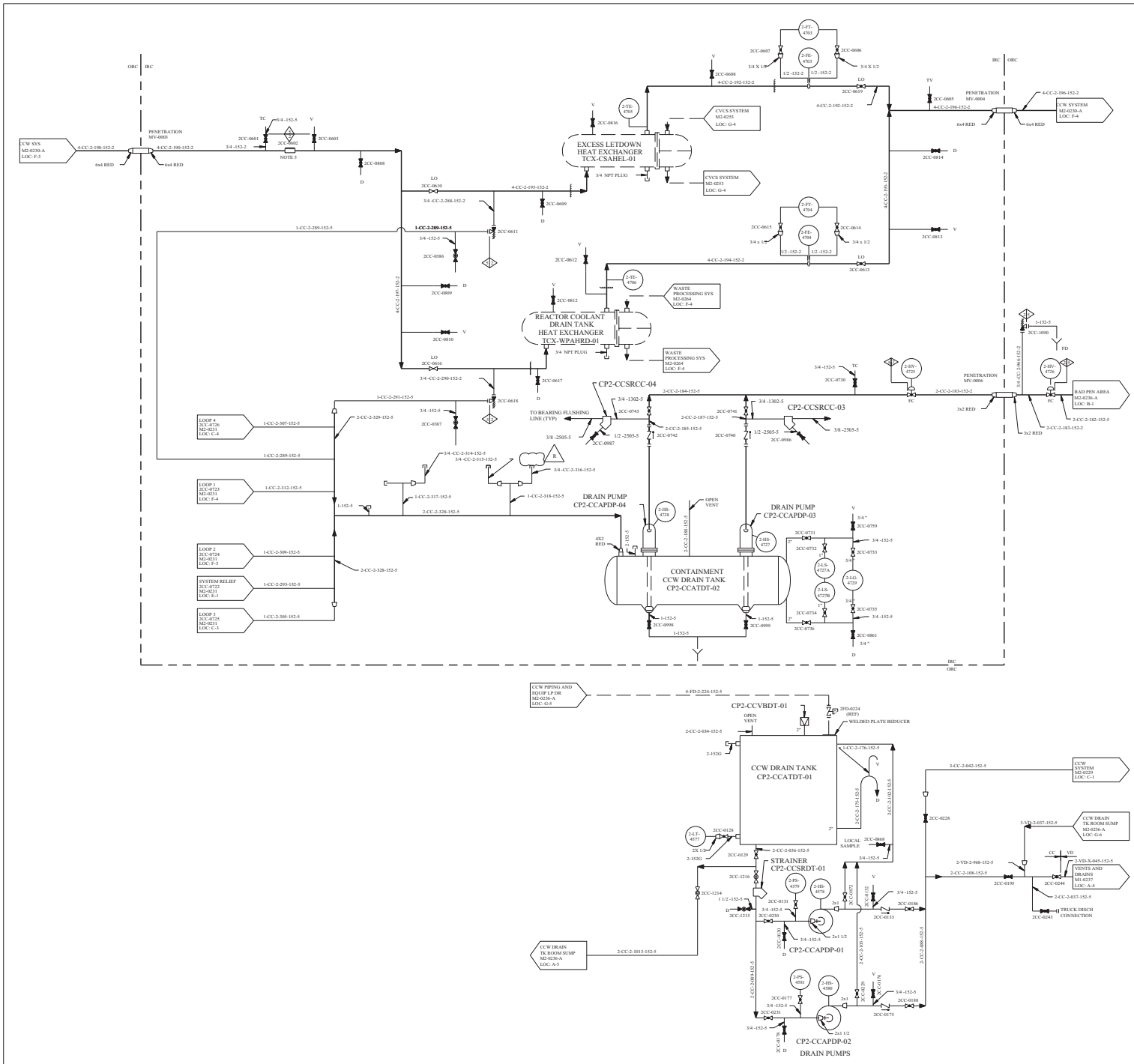

REV	DWN	CHKD	APVD	REMARKS
CP-15	SR 12-11 2001	CA 12-11 2001		THIS DRAWING REVISED TO INCORPORATE DESIGN CHANGE FDA-2001-002002-01-00 PER SK-0005-01-002002-01-00.

NOTES

1. CCW SYSTEM IS SAFETY CLASS 3 EXCEPT AS NOTED.
2. DRAIN LINES, UNLESS OTHERWISE NOTED, MAY BE ROUTED TO THE CONTAINMENT CCW DRAIN TANK HEADER.
3. FOR GENERAL NOTES AND SYMBOLS SEE DWG M1-0200.
4. FLOW INDICATED AT ALL TEST CONNECTIONS, VENTS AND DRAINS SHOULD BE DIRECTED AWAY FROM THE PROCESS PIPING.
5. CHECK VALVE INTERNAL REMOVED, VALVE BODY ABANDONED IN PLACE.

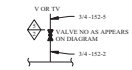

TYPICAL VENT CONNECTION
(UNLESS OTHERWISE NOTED)

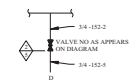

TYPICAL DRAIN CONNECTION
(UNLESS OTHERWISE NOTED)

FSAR FIGURE 9.2-3

THIS DRAWING CREATED ELECTRONICALLY

DRAWING 2323-M2-0231 REV CP-2
HAS BEEN SPLIT INTO THE FOLLOWING SHEETS:
M2-0231
M2-0231-A

CLASS I
(NUCLEAR SAFETY-RELATED)
SAFETY CLASS 1 SEISMIC CATEGORY I
SAFETY CLASS 2 CLASS II
SAFETY CLASS 3 ASSOCIATED CIRCUITS

TXU ELECTRIC
CPSES
GLEN ROSE, TEXAS

FLOW DIAGRAM
COMPONENT COOLING WATER SYSTEM

DWG. NO. M2-0231 | SH. NO. A | REV. CP-15

REF CHKD 11/15/2000

$$$$$$DATE$$$$$

me371700.dgn M2-0231-A

CPE

STRONG ACID CATION UNIT

STRONG BASE ANION UNIT

MIXED BED UNIT

CATION 1 CPX-WTDMSC-01

ANION 1 CPX-WTDMAD-01

MIXED BED 1 CPX-WTDMMB-01

CATION 2 CPX-WTDMSC-02

ANION 2 CPX-WTDMAD-02

MIXED BED 2 CPX-WTDMMB-02

SURFACE WATER PRE-TREATMENT SYSTEM M1-0224-01B LOC: A-1

ACID DILUTION WATER

REGENERATION WASTE HEADER (TRAIN 1)

REGENERATION WASTE HEADER (TRAIN 2)

ACID REGENERANT HEADER

CAUSTIC REGENERANT HEADER

LOW FLOW RECIRC HEADER (TRAIN 2)

LOW FLOW RECIRCULATION HEADER (TRAIN 1)

LOW FLOW RECIRCULATION PUMP CPX-LRAPWT-02

LOW FLOW RECIRCULATION PUMP CPX-LRAPWT-01

RESIN STRAINER CPX-WTSRMB-01 (X-YX-3930)

RESIN STRAINER CPX-WTSRRT-01 (X-YX-3931A)

RESIN STRAINER CPX-WTSRMB-02 (X-YX-3931)

AIR FILTER CPX-WTFLMB-01 (X-AF-3930)

ACID DILUTION TEE

RESIN CLEANOUT (TYP)

TRAIN 1 WASTE TROUGH

TRAIN 2 WASTE TROUGH

6-WT-X-014-151G

6-FD-X-007-002G

CHEMICAL DRAIN SYSTEM M1-0237 LOC: A-2

TO WASTE TANK (TYP)

DRAIN

TO PUMP SEAL

ACID PUMPS M1-0224-A LOC: A-4

SERVICE AIR SYSTEM M1-0217-A LOC: B-2

CAUSTIC DILUTION WATER HEATING TANK M1-0224-A LOC: A-1

CAUSTIC DILUTION WATER HEATING TANK M1-0224-A LOC: A-3

DEMINERALIZED WATER ST TK M1-0241-A LOC: B-5

CHEMICAL DRAIN SYSTEM M1-0237 LOC: A-2

ANION NUMBER 1 OUTLET

MIXED BED NUMBER 1 OUTLET

MIXED BED COMMON OUTLET

MIXED BED NUMBER 2 OUTLET

ANION NUMBER 2 OUTLET

PORTABLE TOC ANALYZER

SODIUM ANALYZER

SAMPLING MANIFOLD ARRANGEMENT

REV	DWN	CHKD	APVD	REMARKS
CP-17	DIL 11-11-2014	RSK 11-11-2014		THIS DRAWING REVISED TO INCORPORATE DESIGN CHANGE FDA-2014-000184-01-00 PER SK-0001-14-000184-01-00.

NOTES

1. A SET OF CHANNEL NUMBERS IS GIVEN TO SYSTEM SUPPLIED IN SPECIFICATION MS-150. ALL THE INSTRUMENTATION AND CONTROL NUMBERS WILL BE ASSIGNED BY SYSTEM SUPPLIED IN THAT RANGE.
2. SEE DRAWING M1-2200-1 FOR INSTRUMENTATION AND CONTROL LEGEND AND MEANING OF IDENTIFICATION LETTERS.
3. SEE MANUFACTURERS DRAWING (LATER) FOR INSTRUMENTATION AND CONTROL LOGIC.
4. THE FOLLOWING SYMBOLS ARE DEFINED AS FOLLOWS:
   - (CE) = CONDUCTIVITY ANALYZER
   - (A) = SILICA ANALYZER
5. THE MANUFACTURER SHALL FURNISH ALL EQUIPMENT ON THIS DRAWING INCLUDING INTERCONNECTING PIPE AND VALVES AS DETAILED IN SPECIFICATION 2323-MS-150.
6. THIS DENOTES THE 3"X12" OBSERVATION WINDOWS FURNISHED FOR THE MIXED BED VESSELS.
7. ALL DRAINS TO HUNGERFORD AND TERRY SUPPLIED DRAIN TROUGHS LOC: F-1.
8. BY H&T = SUPPLIED BY HUNGERFORD AND TERRY ON CP-0150.
9. FOR PIPING CODES ON VENDOR SUPPLIED PIPING SEE MANUFACTURERS DRAWING 28300-A1, CP-0150.
10. INSTRUMENT MANIFOLDING ARRANGEMENT FOR X-PI-4066A AND X-PI-4066B .

INSTRUMENT TAG NO	A	B	C
XPI-4066A	XWT-0009	XWT-0619	XWT-0620
XPI-4066B	XWT-0010	XWT-0621	XWT-0622

11. TAG NUMBERS IN PARENTHESES INDICATE VENDOR TAG NUMBERS.
12. SAMPLING MANIFOLD ARRANGEMENT.
13. SAMPLING AT POINTS OTHER THAN IDENTIFIED ON THIS DRAWING SERIES IS ACCEPTABLE PROVIDED NO CONTROL FUNCTION IS AFFECTED.

14. THIS LOCATION IS ABANDONED IN PLACE PER FDA-2014-000184-01.

DRAWING 2323-M1-0224 REV CP-5
HAS BEEN SPLIT INTO THE FOLLOWING SHEETS:
M1-0224
M1-0224-A

NON-SAFETY

LUMINANT
CPNPP
GLEN ROSE, TEXAS

FLOW DIAGRAM
WATER TREATMENT

DWG. NO. M1-0224 | SH. NO. - | REV. CP-17

ESAR FIGURE 9.2-4

THIS DRAWING CREATED ELECTRONICALLY

SSSSSSSDATESSSSSS REF CKD 6-1-98 CP-16

me00011z.dgn M1-0224

< FINAL PRINT >

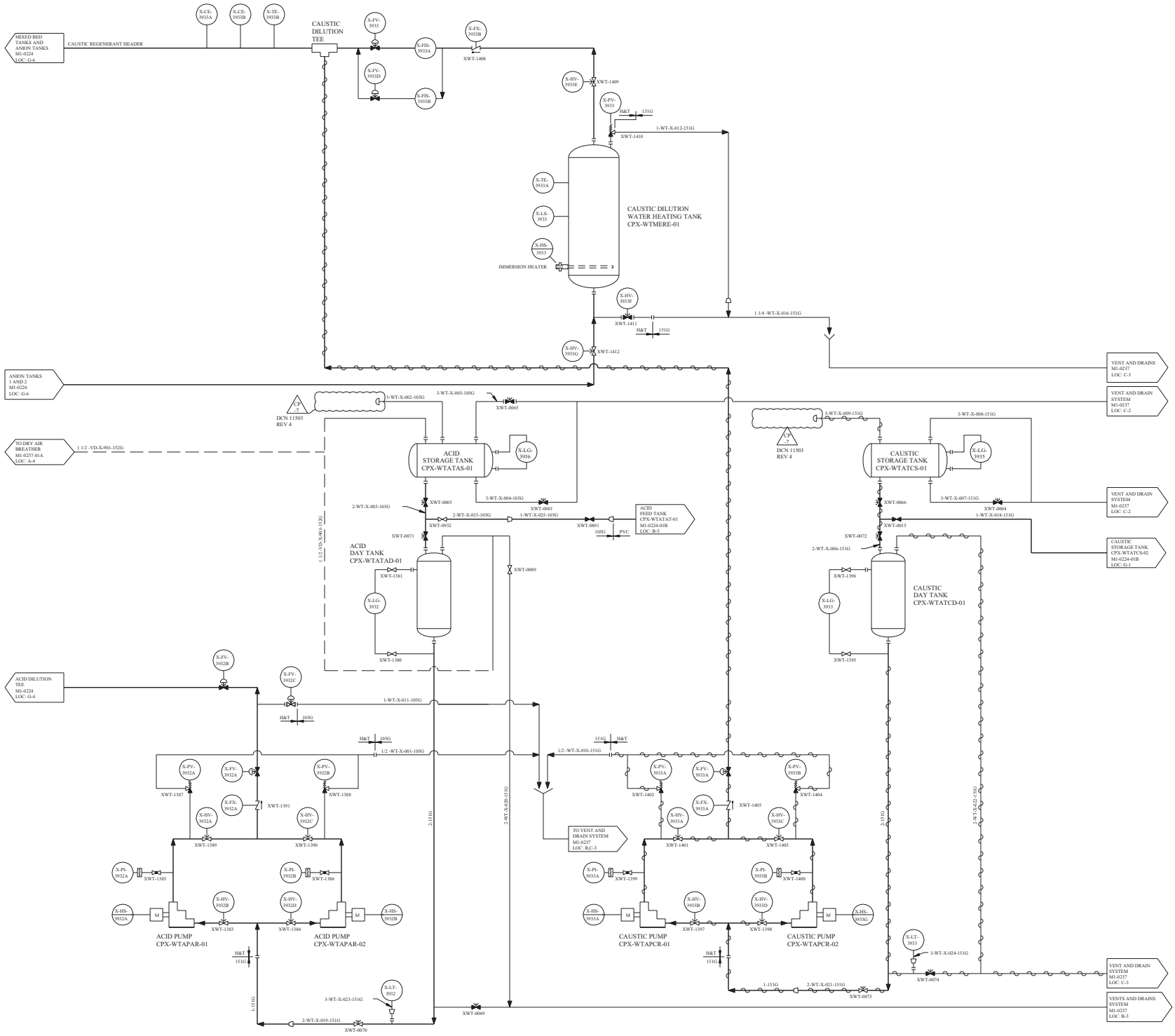

REV	DWN	CHKD	APVD	REMARKS
CP-7	SA 08/07/1998			THIS DRAWING REVISED TO INCORPORATE DESIGN CHANGE DCN 11503 REV 4.

NOTE:

1. GENERAL NOTES AND REFERENCE DWGS SEE DWG M1-0224.

FSAR FIGURE 9.2-4

THIS DRAWING CREATED ELECTRONICALLY

DRAWING 2323-M1-0224 REV CP-5
HAS BEEN SPLIT INTO THE FOLLOWING SHEETS:
M1-0224
M1-0224-A

NON-SAFETY

TXU ELECTRIC
CPSES
GLEN ROSE, TEXAS

FLOW DIAGRAM
WATER TREATMENT

DWG. NO.	SH. NO.	REV.
M1-0224	A	CP-7

me0001750.dgn

$$$$$$$$TA ITESSSSS

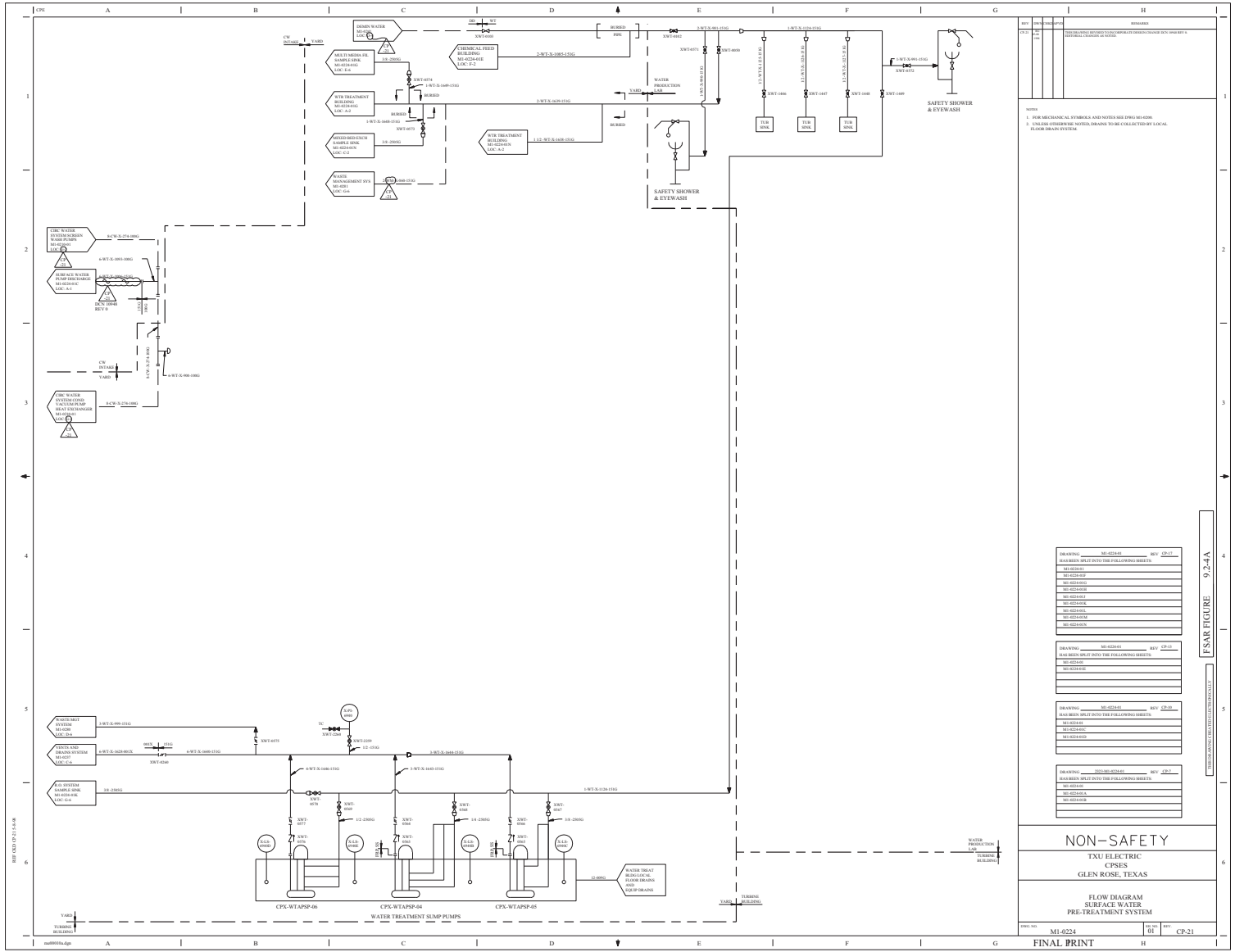
CPE
A
B
C
D
E
F
G
H
REV
DWG
TECH SPEC
NCR
REMARKS
CP-21
NO CHG
THIS DRAWING REVISED TO INCORPORATE DESIGN CHANGE DCN 19948 REV 0. EDITORIAL CLEANUP, AS NOTED.
NOTES
1. FOR MECHANICAL SYMBOLS AND NOTES SEE DWG M1-0200.
2. UNLESS OTHERWISE NOTED, DRAINS TO BE COLLECTED BY LOCAL FLOOR DRAIN SYSTEM.
DRAIN WATER SEALING LOC: C-6
CHEMICAL FEED BUILDING M1-0224-01E LOC: F-2
2-WT-X-1085-151G
MULTI MEDIA FIL SAMPLE SINK M1-0224-01G LOC: E-6
1/4 -2503G
WTR TREATMENT BUILDING M1-0224-01G LOC: A-1
MIXED BED EXCH SAMPLE SINK M1-0224-01N LOC: C-2
1/8 -2503G
WASTE MANAGEMENT SYS M1-0201 LOC: G-6
WTR TREATMENT BUILDING M1-0224-01N LOC: A-2
1 1/2 -WT-X-1638-151G
2-WT-X-1639-151G
1-WT-X-1648-151G
1-WT-X-1649-151G
2-WT-X-991-151G
XWT-6991
XWT-6992
XWT-6993
XWT-6994
XWT-6995
XWT-6996
XWT-6997
XWT-6998
XWT-6999
XWT-1446
XWT-1447
XWT-1448
XWT-1449
XWT-6970
XWT-6971
XWT-6972
XWT-6973
XWT-6974
XWT-6975
XWT-6976
XWT-6977
XWT-6978
XWT-6979
XWT-6980
XWT-6981
XWT-6982
XWT-6983
XWT-6984
XWT-6985
XWT-6986
XWT-6987
XWT-6988
XWT-6989
XWT-6990
XWT-2229
XWT-2230
XWT-4240
TUR SINK
SAFETY SHOWER & EYEWASH
WATER PRODUCTION LAB
TURBINE BUILDING
CIRC WATER SYSTEM SCREEN M1-0201 PUMPS LOC: A-6
8-CW-X-276-108G
6-WT-X-1093-108G
SUBSEACS WATER PUMP DISCHARGE M1-0224-01C LOC: A-1
DCN 19948 REV 0
6-CW-X-274-108G
6-WT-X-998-108G
CW INTAKE
YARD
CHC WATER SYSTEM CHEM VACUUM PUMP HEAT EXCHANGER M1-0228-01 LOC: A-6
WASTE MGT SYSTEM M1-0200 LOC: D-6
WWTS AND DRAINS SYSTEM M1-0237 LOC: C-6
SAS SYSTEM M1-0224-01C M1-0224-01K LOC: G-6
3-WT-X-999-151G
6-WT-X-1629-001N
6-WT-X-1640-151G
3-WT-X-1644-151G
3-WT-X-1643-151G
1-WT-X-1126-151G
1/2 -151G
1/4 -2503G
1/8 -2503G
12-1095G
WATER TREAT BLDG LOC H, FLOOR DRAINS AND EQUIP DRAINS
CPX-WTAPSP-06
CPX-WTAPSP-04
CPX-WTAPSP-05
WATER TREATMENT SUMP PUMPS
TURBINE BUILDING
REF ADD CP-21 E-6,B
DRAWING M1-0224-01 REV CP-17 HAS BEEN SPLIT INTO THE FOLLOWING SHEETS:
M1-0224-01
M1-0224-01F
M1-0224-01G
M1-0224-01H
M1-0224-01J
M1-0224-01K
M1-0224-01L
M1-0224-01M
M1-0224-01N
DRAWING M1-0224-01 REV CP-13 HAS BEEN SPLIT INTO THE FOLLOWING SHEETS:
M1-0224-01
M1-0224-01E
DRAWING M1-0224-01 REV CP-10 HAS BEEN SPLIT INTO THE FOLLOWING SHEETS:
M1-0224-01
M1-0224-01C
M1-0224-01D
DRAWING 2323-M1-0224-01 REV CP-7 HAS BEEN SPLIT INTO THE FOLLOWING SHEETS:
M1-0224-01
M1-0224-01A
M1-0224-01B
FSAR FIGURE 9.2-4A
THESE DRAWINGS ARE ELECTRONICALLY
NON-SAFETY
TXU ELECTRIC
CPSES
GLEN ROSE, TEXAS
FLOW DIAGRAM
SURFACE WATER
PRE-TREATMENT SYSTEM
DWG. NO. M1-0224
SH. NO. 01
REV. CP-21
FINAL PRINT
mn00010a.dgn

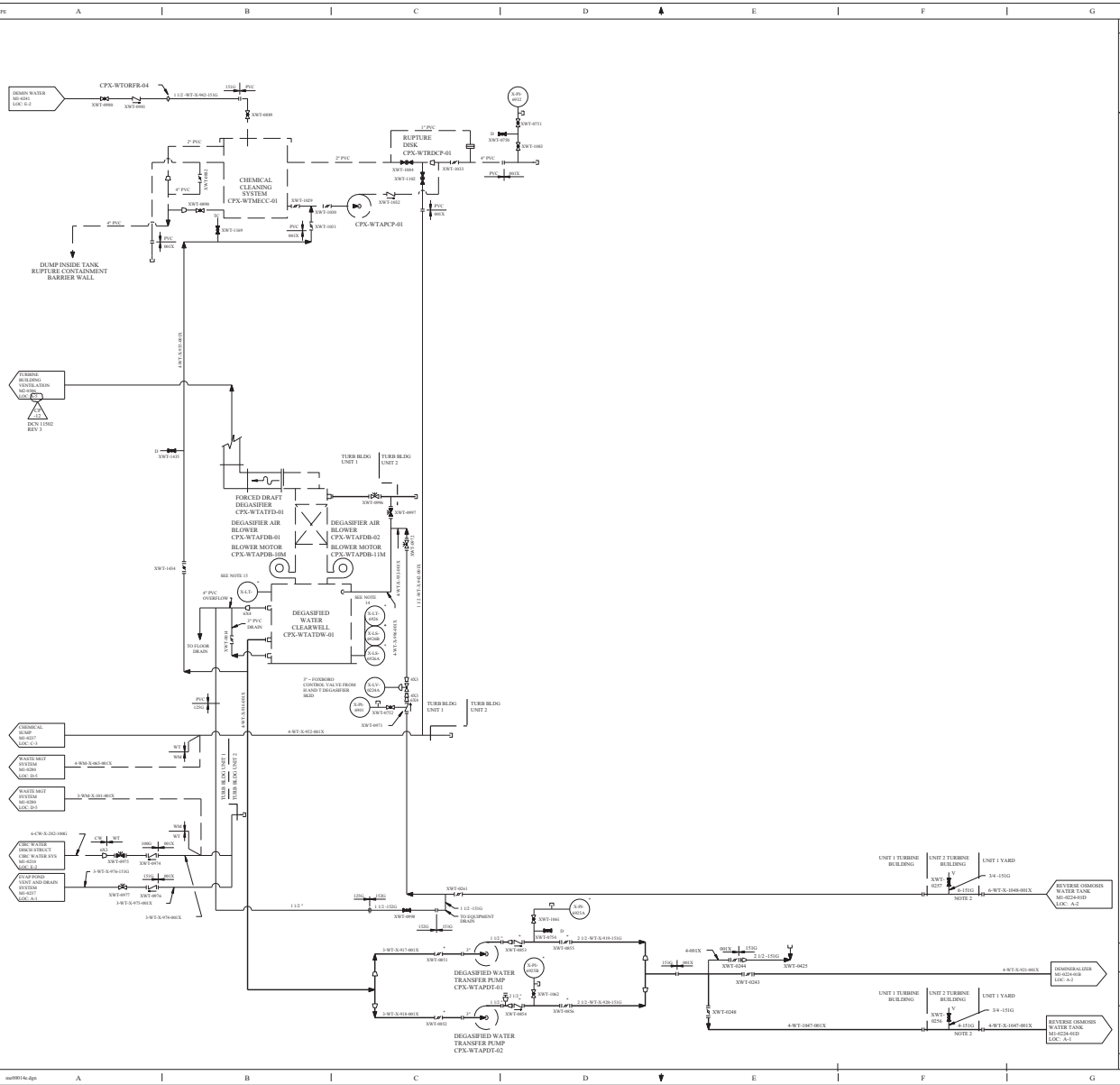

REV	DESIGN	CHECK	APVD	REMARKS
CP-13	[illegible] 11-01-1999			THIS DRAWING REVISED TO INCORPORATE DESIGN CHANGE DCN 11502 REV 3.

NOTES:

1. ALL PREASSEMBLED EQUIPMENT OR SKID MOUNTED EQUIPMENT AND PIPING SUPPLIED BY GRAVER IS SHOWN IN FRANTONE. ALL EQUIPMENT SUPPLIED BY GRAVER LOOSE FOR INSTALLATION IN PURCHASERS PIPING IS INDICATED BY *
2. CAT 316G AND 601G TO BE 8 CR STAINLESS STEEL.
3. PIPE AND FITTINGS TO BE CARPENTER ALLOY 20.
4. SEE DRAWING M1-2227-01 AND M1-2227-02 FOR CONTROL LOGIC.
5. FOR MECHANICAL NOTES AND SYMBOLS SEE MI-0200.
6. ALL DRAINS TO BE COLLECTED LOCALLY UNLESS OTHERWISE NOTED.
7. FOR CONTROL LOGIC SEE ECODYNE-GRAVER DRAWINGS T-29241 AND T-29369.
8. 4" - 1 XWT-0972 XWT-0896 AND XWT-0897) AND 3" - 1 XWT-0975 (FLANGED SARAN LINED DIAPHRAGM VALVE SALVAGED FROM HUNGERFORD AND TERRY DEGASIFIER SKID.
9. THIS FLOW DIAGRAM HAS BEEN REDRAWN FROM ECODYNE GRAVER DRAWINGS T-29241-H AND T-29364-C WITH FIELD CHANGES INCORPORATED.
10. DELETED.
11. DELETED.
12. DELETED.
13. DELETED.
14. INSTRUMENT TREE DETAIL.
15. LEVEL TRANSMITTER ABANDONED IN PLACE.

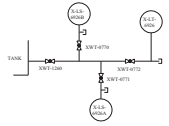

FSAR FIGURE 9.2-4A

DRAWING 2203-M1-0224-01 REV CP-7
HAS BEEN SPLIT INTO THE FOLLOWING SHEETS:
M1-0224-01
M1-0224-01A
M1-0224-01B

THESE ADDITIONAL SHEETS ARE NOT INCLUDED IN THIS MICROFICHE

NON-SAFETY

TXU ELECTRIC
CPSES
GLEN ROSE, TEXAS

FLOW DIAGRAM
SURFACE WATER
PRE-TREATMENT SYSTEM

DWG. NO. M1-0224 | SHEET 01A | REV. CP-13

FINAL PRINT

REFCND 11/07/CP-12

ma000146.dgn

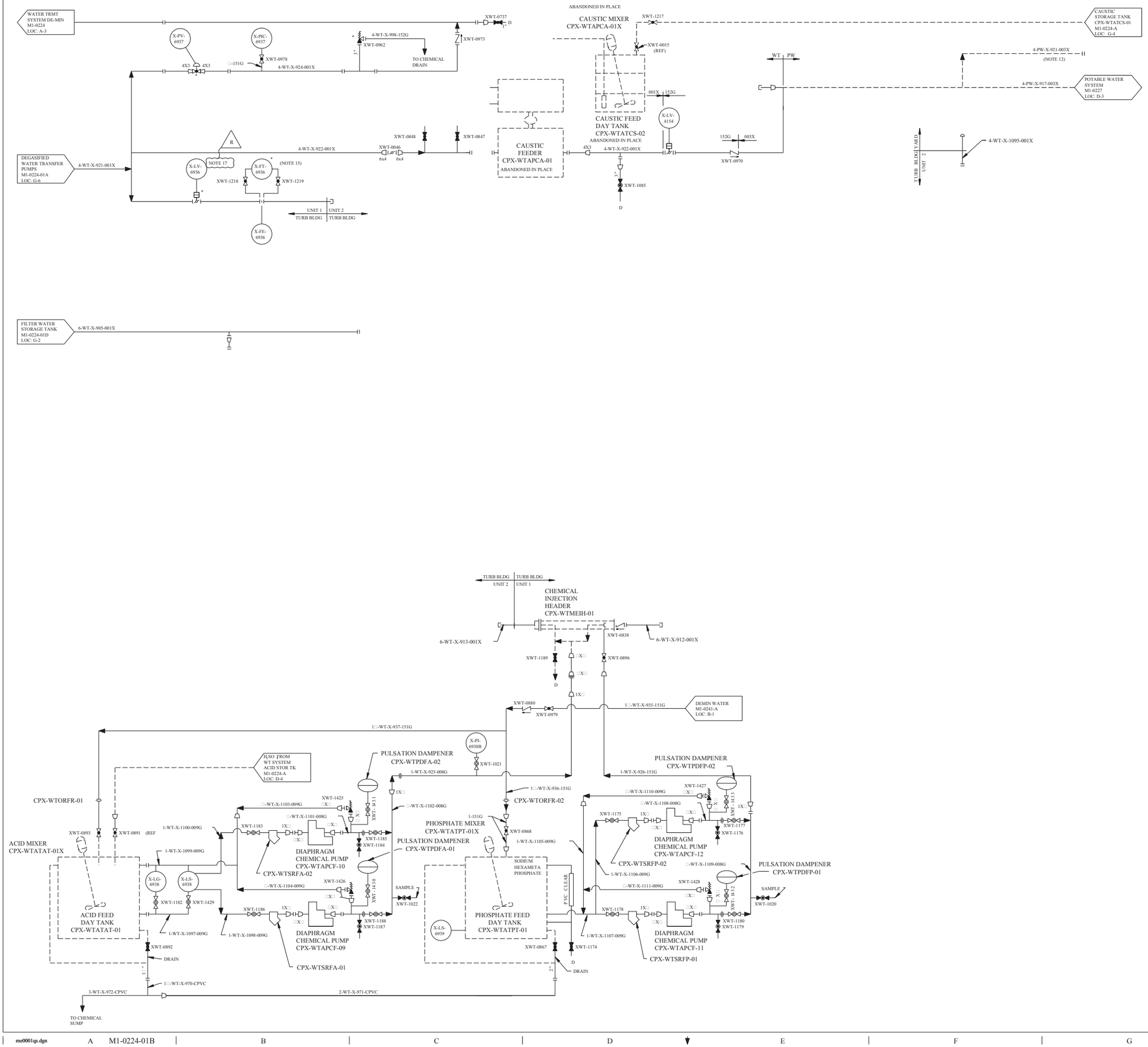

REV	DWN	CHKD	APVD	REMARKS
CP-18	DJL 11-11-2014	JRMC 11-11-2014		THIS DRAWING REVISED TO INCORPORATE DESIGN CHANGE FDA-2014-000184-01-00 PER SK-0007-14-000184-01-00.

NOTES:

1. ALL PREASSEMBLED EQUIPMENT OR SKID MOUNTED EQUIPMENT AND PIPING SUPPLIED BY GRAVER IS SHOWN IN PHANTOM. ALL EQUIPMENT SUPPLIED BY GRAVER LOOSE FOR INSTALLATION IN PURCHASERS PIPING IS INDICATED BY * .
2. CAT 151G AND 601G TO BE F316 STAINLESS STEEL.
3. FOR CONTROL LOGIC SEE ECODYNE-GRAVER DRAWINGS T-29241 AND T-29569 .
4. ALL LINES 6" AND SMALLER LOCATED ABOVE GROUND OUTDOORS WITH THE EXCEPTION OF THE FOLLOWING LINES: 3-WT-X-990-152G,3-WT-X-991-152G, 3-WT-X-992-152G, 3-WT-X-999-152G (DOWNSTREAM OF VALVE XWT-9881), 6-WT-X-956-002X (DOWNSTREAM OF VALVE XWT-8101) SHALL BE INSULATED.
5. THIS FLOW DIAGRAM HAS BEEN REDRAWN FROM ECODYNE-GRAVER DRAWINGS T-29241-B AND T-29569-C WITH FIELD CHANGES INCORPORATED.
6. FOR GENERAL NOTES AND SYMBOLS SEE DRAWING M1-0200.
7. DELETED
8. DELETED
9. UNLESS OTHERWISE NOTED, ALL DRAINS TO BE COLLECTED BY LOCAL DRAIN SYSTEM.
10. THE FOLLOWING VALVES ARE TO BE BALL VALVES, MANUFACTURED BY NIBCO/CHEMTROL, "TRUE BLOC" TRUE UNION IN CPVC BODY MATERIAL:

    XWT-1020 , XWT-1021 , XWT-1022 , XWT-1175 , XWT-1176 , XWT-1177 , XWT-1178 , XWT-1179 , XWT-1180 , XWT-1182 , XWT-1183 , XWT-1184 , XWT-1185 , XWT-1186 , XWT-1187 , XWT-1188 , XWT-1429 , XWT-1430 , XWT-1431 , XWT-1432 , XWT-1433
11. THE FOLLOWING VALVES ARE TO BE RELIEF VALVES IN CARPENTER 20 ALLOY (ALLOY 20) BODY MATERIAL, □" ELO VR-6D-1 ALLOY 20 WITH A 115 PSI SET PRESSURE:

    XWT-1425 , XWT-1426

    THE FOLLOWING VALVES ARE TO BE RELIEF VALVES IN 316 SS BODY MATERIAL, □" ELO VR-6A-1 TYPE 316 WITH A 115 PSI SET PRESSURE:

    XWT-1427 , XWT-1428
12. PIPING BLANKED OFF AT THE DEGASIFIED WATER CLEAR WELL (CPX-WTATDW-01) AREA.
13. DELETED.
14. DELETED.
15. MANIFOLDING ARRANGEMENT FOR X-FT-6936 :

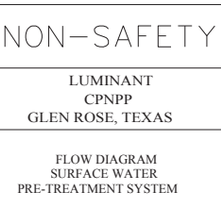

16. DELETED.
17. THIS LOCATION IS ABANDONED IN PLACE PER FDA-2014-000184-01.

R

DRAWING 2323-M1-0224-01 REV CP-7
HAS BEEN SPLIT INTO THE FOLLOWING SHEETS:

- M1-0224-01
- M1-0224-01A
- M1-0224-01B

NON–SAFETY

LUMINANT
CPNPP
GLEN ROSE, TEXAS

FLOW DIAGRAM
SURFACE WATER
PRE-TREATMENT SYSTEM

DWG. NO. M1-0224 | SH. NO. 01B | REV. CP-18

FSAR FIGURE 9.2-4A

THIS DRAWING CREATED ELECTRONICALLY

$$$$$$$$DATE$$$$$$$$ REF CKD 1/ 15/ 98 CP-16

me0001qs.dgn M1-0224-01B < FINAL PRINT >

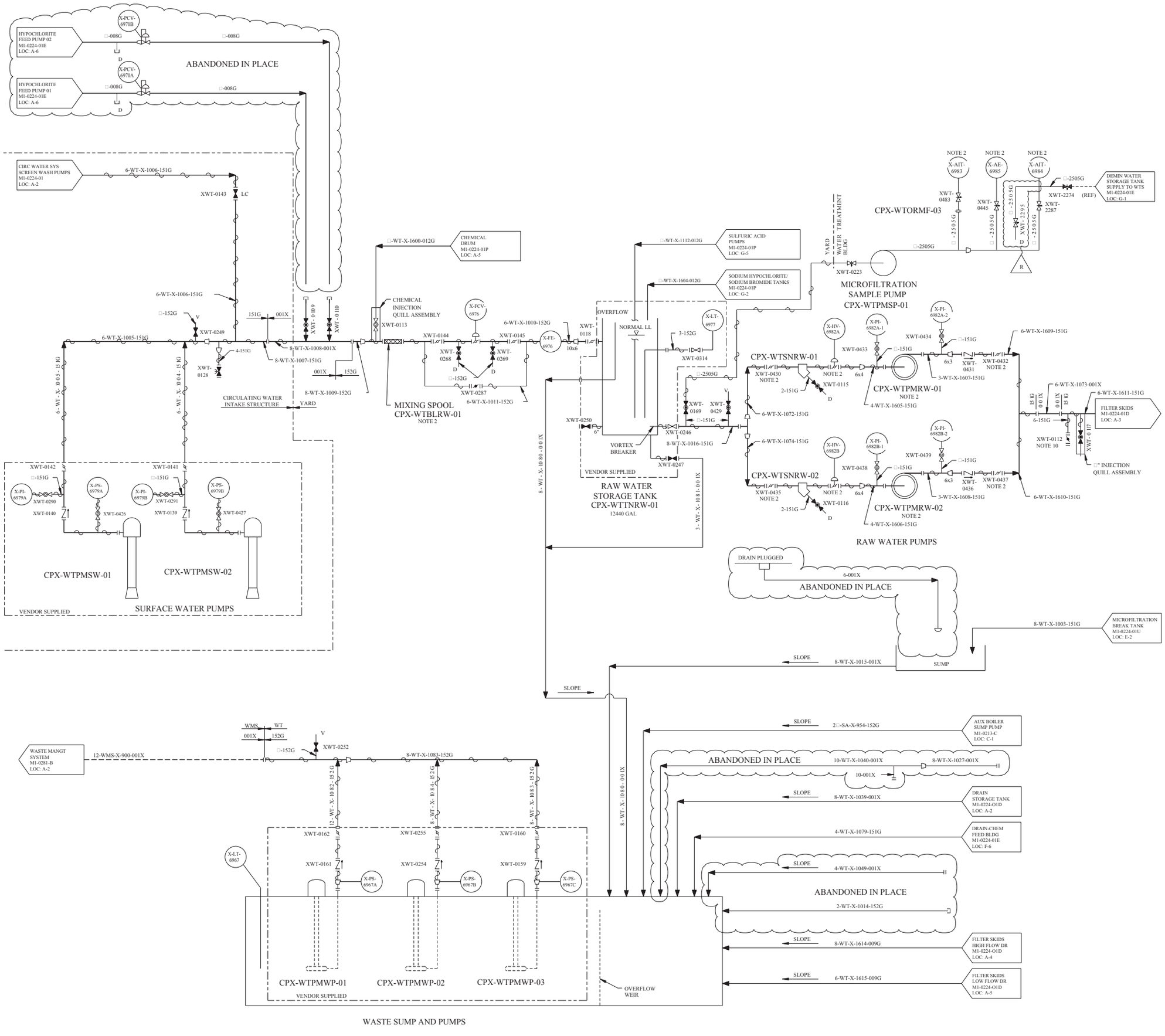

REV	DWN	CHKD	APVD	REMARKS
CP-20	DLK 05-28-2014	MM 05-28-2014		THIS DRAWING REVISED TO INCORPORATE DESIGN CHANGE: FDA 2014-000133-01-00 PER SK-0005-14-000133-01-00.

NOTES:

1. FOR GENERAL NOTES AND SYMBOLS SEE DRAWING M1-0200.
2. COMPONENTS FURNISHED LOOSE BY WATER PRE-TREATMENT SYSTEM VENDOR FOR INSTALLATION IN CUSTOMER PIPING.
3. DELETED
4. DELETED
5. DELETED
6. DELETED
7. FOR HEAT TRACING SEE DCN-1103.
8. DELETED
9. DELETED
10. VALVE XWT-0112 IS INTENDED AS THE CONNECTION POINT OF AN ALTERNATE FILTRATION UNIT (MOBILE FILTRATION TRAILER). THIS VALVE SERVES AS THE SUPPLY VALVE TO THE ALTERNATE UNIT. THIS ALTERNATE FILTRATION UNIT MAY BE CONNECTED AT THE DISCRETION OF CHEMISTRY TO THE WT SYSTEM DURING AN EXTENDED OUTAGE OF THE PERMANENT MICROFILTRATION SYSTEM.

FSAR FIGURE 9.2-4A

THIS DRAWING CREATED ELECTRONICALLY

DRAWING M1-0224-01 REV CP-10
HAS BEEN SPLIT INTO THE FOLLOWING SHEETS:

M1-0224-01
M1-0224-01C
M1-0224-01D

NON-SAFETY

LUMINANT
CPNPP
GLEN ROSE, TEXAS

FLOW DIAGRAM
SURFACE WATER
PRE-TREATMENT SYSTEM

DWG NO.	SH. NO.	REV.
M1-0224	01C	CP-20

$$$$$$$$DATE$$$$$$ REF CKD 5-8-98 CP-12

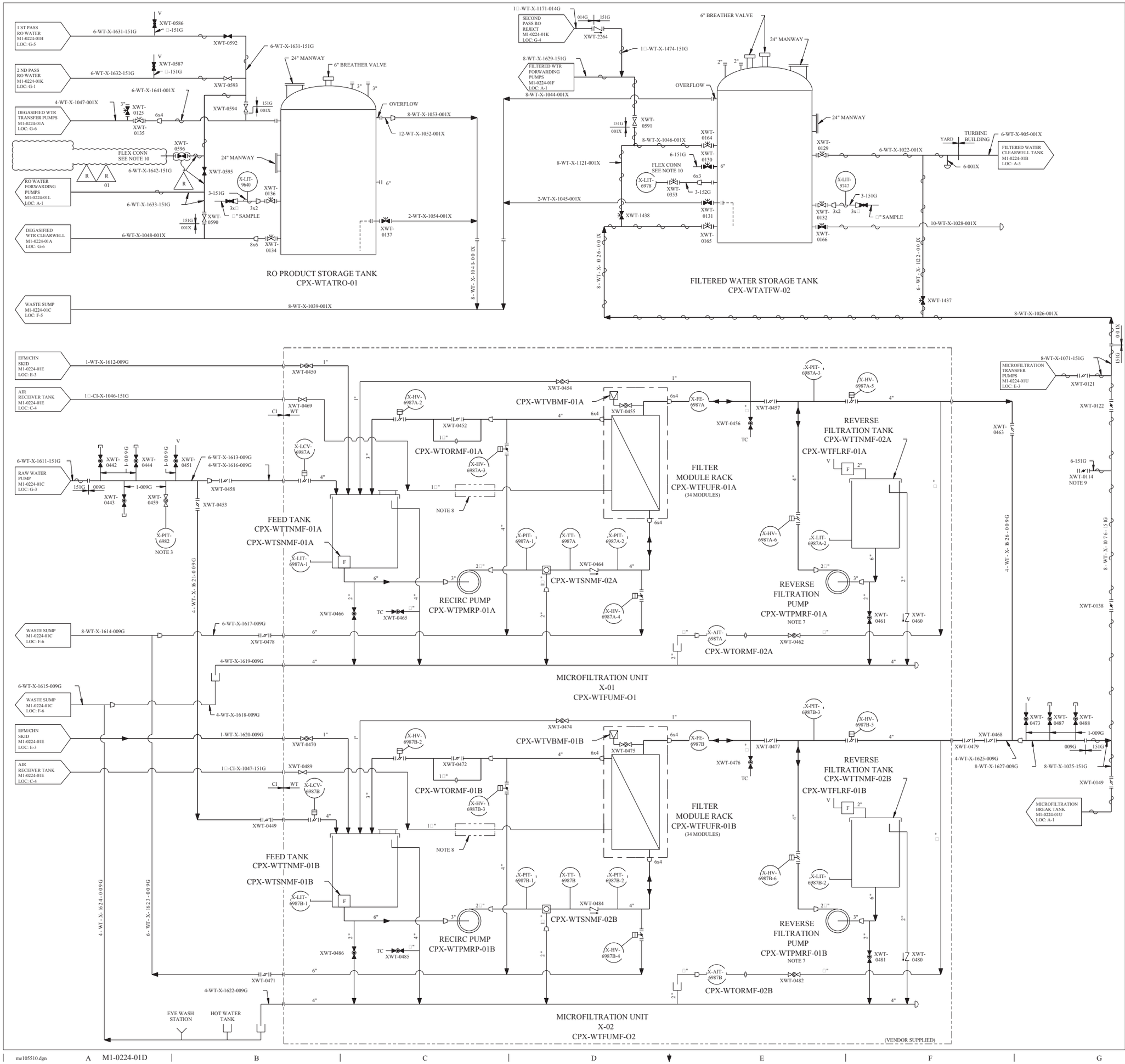

REV	DWN	CHKD	APVD	REMARKS
CP-17	DLK 09-12-2014	MM 09-12-2014		THIS DRAWING REVISED TO INCORPORATE DESIGN CHANGE FDA 2013-000008-11-01 PER SK-0001-13-000008-11-01.

NOTES:

1. FOR GENERAL NOTES AND SYMBOLS SEE DRAWING M1-0200.
2. FOR HEAT TRACING SEE DCN-1103.
3. COMPONENTS FURNISHED LOOSE BY WATER PRE-TREATMENT SYSTEM VENDOR FOR INSTALLATION IN CUSTOMER PIPING.
4. DELETED
5. DELETED
6. DELETED
7. THE WATER TREATMENT MICROFILTRATION VENDOR INDICATES THAT THE REVERSE FILTRATION PUMPS ROTATE BACKWARDS DURING THE FILTER MODULE CLEANING AND BACK FLUSHING ACTIVITIES.
8. REFER TO VENDOR DRAWING 10000022051 SHEET 3 FOR ADDITIONAL DETAILS OF THE X-01 AND X-02 SKID MOUNTED INSTRUMENT AIR SYSTEM DESIGN, LAYOUT AND COMPONENTS.
9. VALVE XWT-0114 IS INTENDED AS THE CONNECTION POINT OF AN ALTERNATE FILTRATION UNIT (MOBILE FILTRATION TRAILER). THIS VALVE SERVES AS THE DISCHARGE VALVE TO THE ALTERNATE UNIT. THIS ALTERNATE FILTRATION UNIT MAY BE CONNECTED AT THE DISCRETION OF CHEMISTRY TO THE WT SYSTEM DURING AN EXTENDED OUTAGE OF THE PERMANENT MICROFILTRATION SYSTEM.
10. FLEX CONNECTION - MAY BE A PIPE CAP OR STORZ FITTING.

R 01

FSAR FIGURE 9.2-4A

THIS DRAWING CREATED ELECTRONICALLY

DRAWING M1-0224-01 REV CP-10
HAS BEEN SPLIT INTO THE FOLLOWING SHEETS:
M1-0224-01
M1-0224-01C
M1-0224-01D

NON-SAFETY

LUMINANT
CPNPP
GLEN ROSE, TEXAS

FLOW DIAGRAM
SURFACE WATER
PRE-TREATMENT SYSTEM

DWG. NO. M1-0224 | SH. NO. 01D | REV. CP-17

$$$$$$$$DATE$$$$$$$$

me105510.dgn A M1-0224-01D

< FINAL PRINT >

REV	DWN	CHKD	APVD	REMARKS
CP-15	DLK 12-18-2013	MM 12-18-2013		THIS DRAWING REVISED TO INCORPORATE DESIGN CHANGE FDA 2013-000191-01-00 PER SK-0001-13-000191-01-00.

NOTES:

1. FOR GENERAL NOTES AND SYMBOLS ON DRAWING M1-0200.
2. DELETED
3. INSULATION AND HEAT TRACING TO BE PROVIDED ON ALL CAUSTIC LINES AND BULK CAUSTIC STORAGE TANK.
4. * DENOTES SCHEDULE 80 PVC PIPE SUPPLIED BY VENDOR OR 008G IF PROVIDED BY FIELD.
5. FOR HEAT TRACING SEE DCN 1103.
6. VENT VALVES PROVIDED BY CUSTOMER ON VENDOR FURNISHED SKID.
7. DENOTES PVDF OR KYNAR LINED CPVC.
8. COMPONENTS FURNISHED LOOSE BY WATER PRE-TREATMENT SYSTEM VENDOR FOR INSTALLATION IN CUSTOMER PIPING.
9. □" AND □" CATGORY 012G KYNAR CHEMICAL INJECTION LINE SEGMENTS SHALL BE ROUTED INSIDE 1□" PVC SCHEDULE 80 GUARD PIPE.

FSAR FIGURE 9.2-4A

THIS DRAWING CREATED ELECTRONICALLY

DRAWING M1-0224-01 REV CP-13
HAS BEEN SPLIT INTO THE FOLLOWING SHEETS:
M1-0224-01
M1-0224-01E

NON-SAFETY

LUMINANT
CPNPP
GLEN ROSE, TEXAS

FLOW DIAGRAM
SURFACE WATER
PRE-TREATMENT SYSTEM

DWG. NO. M1-0224 | SH. NO. 01E | REV. CP-15

$$$$$$$$DATE$$$$$$ REF CHKD 09-02-2003

me105370.dgn A M1-0224-01E B C D E F G < FINAL PRINT > H

REV	DWN	CHK	APVD	REMARKS
CP-7	JRMC 10-10 2012	DJL 10-12 2012		THIS DRAWING REVISED TO INCORPORATE DESIGN CHANGE FDA 2012-00152-01-00 PER SK-0001-12-000152-01-00.

NOTES:

1. FOR GENERAL NOTES AND SYMBOLS SEE DRAWING M1-0200.
2. UNLESS OTHERWISE NOTED ALL DRAINS COLLECTED BY LOCAL DRAIN SYSTEM.
3. GLEGG WATER CONDITIONING, INC DRAWING 2011P1-1.

FILTER WATER STORAGE TANK M1-0224-01D LOC: D-1

CPX-WTPMFT-07
CPX-WTPMFT-06
CPX-WTPMFT-05
CPX-WTPMFT-04

FILTERED WATER FORWARDING PUMPS

MULTI MEDIA FILTER UNIT CPX-WTFLMM-01

MULTI MEDIA FILTER UNIT CPX-WTFLMM-02

MULTI MEDIA FILTER UNIT CPX-WTFLMM-03

SAMPLE SINK M1-0224-01G LOC: D-5

SECONDARY WATER SUPPLY

CHEMICAL INJECTION

CORROSION COUPON SKID

TEMPORARY RO MODULE

CARTRIDGE FILTERS M1-0224-01G LOC: A-2

ACID INJECTION

CPX-WTPMAF-01

CPX-WTPMAF-02

93% H SO INLET M1-0224-01N LOC: A-3

RO ACID FEED PUMPS

NOTE: EQUIPMENT LOCATED ON THE ACID REGENERATION SKID

CPX-WTBLMM-01

CPX-WTBLMM-02

MULTI MEDIA FILTER AIR SCOUR BLOWERS

FSAR FIGURE 9.2-4A

THIS DRAWING CREATED ELECTRONICALLY

DRAWING M1-0224-01 REV CP-17 HAS BEEN SPLIT INTO THE FOLLOWING SHEETS:

M1-0224-01
M1-0224-01F
M1-0224-01G
M1-0224-01H
M1-0224-01J
M1-0224-01K
M1-0224-01L
M1-0224-01M
M1-0224-01N

NON–SAFETY

LUMINANT
CPNPP
GLEN ROSE, TEXAS

FLOW DIAGRAM
SURFACE WATER
PRE-TREATMENT SYSTEM

DWG. NO.	SH. NO.	REV.
M1-0224	01F	CP-7

$$$$$$$DATE$$$$$$$

me103420.dgn A M1-0224-01F < FINAL PRINT >

REV	DWN	CHKD	APVD	REMARKS
CP-8	DJL 12-21-2011	MB 12-21-2011		THIS DRAWING REVISED TO INCORPORATE DESIGN CHANGE FDA-2011-000224-01-00 PER SK-0001-11-000224-01-00.

NOTES:

1. FOR GENERAL NOTES AND SYMBOLS SEE DRAWING M1-0200.
2. UNLESS OTHERWISE NOTED ALL DRAINS COLLECTED BY LOCAL DRAIN SYSTEM.
3. GLEGG WATER CONDITIONING, INC DRAWING 2011P1-2.
4. 500 ML GRADUATED CALIBRATION CYLINDER.

MULTI MEDIA FILTER UNITS M1-0224-01F LOC: G-2

6-WT-X-1167-014G

1□-014G

X-PS-9435

X-PI-9433

X-PI-9434

XWT-1620

XWT-1621

XWT-1622

XWT-1625

XWT-1626

X-FIT-9430

X-FE-9430

3-WT-X-1172-014G

XWT-1631

XWT-1640

4x3

XWT-1637

XWT-1632

CARTRIDGE FILTER CPX-WTFLCF-03

SURFACE WATER PUMP DISCHARGE M1-0224-01H LOC: A-5

XWT-2285

XWT-2284

□ SS TUBING

WTR TREATMENT SYSTEM M1-0224-01 LOC: C-1

2-WT-X-1639-151G

1-WT-X-1200-151G

XWT-2280

HOSE CONNECTION

SAFETY SHOWER AND EYEWASH CPX-WTMELV-01

XWT-0580

XWT-0599

1□-WT-X-1637-151G

RO CLEANING SOLUTION TANK M1-0224-01J LOC: A-5

1-WT-X-1473-151G

1-WT-X-1190-151G

MIXER CPX-WTMXAN-01

6-WT-X-1167-014G

6-WT-X-1167-014G

3-WT-X-1533-014G

X-FIT-9431

X-FE-9431

3-WT-X-1173-014G

XWT-1633

XWT-1623

XWT-1627

XWT-1628

XWT-1638

3-WT-X-1534-014G

XWT-1634

CARTRIDGE FILTER CPX-WTFLCF-04

ANTISCALANT MEASURING TANK CPX-WTTNAN-01

X-LS-9400

X-HS-9401

X-LE-9400

XWT-1582

XWT-1580

XWT-1581

X-LI-9399

1-WT-X-1191-151G

1-WT-X-1192-151G

1-WT-X-1193-151G

XWT-1583

XWT-1414

XWT-1417

XWT-1415

XWT-1416

NOTE 4

□-2505G

ANTISCALANT FEED PUMPS

ANTISCALANT FEEDER

□-WT-X-1531-151G

□-WT-X-1199-151G

XWT-1592

X-ZC-9396A

X-HS-9396A

X-PI-9392

XWT-1586

XWT-1588

□-WT-X-1197-151G

XWT-1584

CPX-WTPMAN-01

1-WT-X-1195-15 IG

□-WT-X-1195-15 IG

XWT-1593

□-WT-X-1198-151G

X-ZC-9396B

X-HS-9396B

X-PI-9393

XWT-1587

XWT-1589

□-WT-X-1194-151G

□-WT-X-1196-151G

CPX-WTPMAN-02

6-WT-X-1175-014G

X-FIT-9432

X-FE-9432

XWT-1629

XWT-1630

XWT-1624

XWT-1635

XWT-1639

3-WT-X-1535-014G

XWT-1636

CARTRIDGE FILTER CPX-WTFLCF-05

X-AE-9436

X-CE-9441

X-FV-9436

X-FV-9441

XWT-1641

XWT-1643

XWT-1651

XWT-2248

□" PLUG

6-WT-X-1650-014G

XWT-2291

XWT-2292

XWT-2290

XWT-1642

6-WT-X-1179-014G

FIRST PASS RO FEED PUMPS M1-0224-01H LOC: A-5

15 IG

10 IG

X-FV-9398

XWT-1590

XWT-1591

□-WT-X-1532-105G

ANTISCALANT INJECTION

1-WT-X-1200-151G

MIXER CPX-WTMXBI-01

VENT TO ATMOSPHERE

6-009G

REF DWG M1-0310-B (C-4)

X-LS-9420

X-HS-9421

X-LE-9420

XWT-1602

XWT-1600

XWT-1601

X-LI-9419

1-WT-X-1202-151G

1-WT-X-1203-151G

XWT-1603

XWT-1615

XWT-1618

XWT-1616

XWT-1617

NOTE 4

□-2505G

SODIUM BISULFITE FEED PUMPS

SODIUM BISULFITE FEEDER

SODIUM BISULFITE MEASURING TANK CPX-WTTNBI-01

□-WT-X-1530-151G

XWT-1612

□-WT-X-1209-151G

X-ZC-9416A

X-HS-9416A

X-PI-9412

XWT-1606

XWT-1608

□-WT-X-1207-151G

XWT-1604

CPX-WTPMBI-01

1-WT-X-1205-15 IG

□-WT-X-1205-15 IG

XWT-1613

□-WT-X-1208-151G

X-ZC-9416B

X-HS-9416B

X-PI-9413

XWT-1607

XWT-1609

□-WT-X-1204-151G

□-WT-X-1206-151G

CPX-WTPMBI-02

X-FV-9418

XWT-1610

□-WT-X-1529-105G

BISULFITE INJECTION

FIRST PASS RO FEED PUMPS M1-0224-01H LOC: A-5

□ - SS TUBING

MULTI MEDIA FILTER 2 OUTLET M1-0224-01F LOC: E-4

MULTI MEDIA FILTER 1 OUTLET M1-0224-01F LOC: E-2

INLET HEADER MULTI MEDIA UNITS M1-0224-01F LOC: A-6

MULTI MEDIA FILTER 3 OUTLET M1-0224-01F LOC: E-6

□-SS TUBING

□-2505G

SAMPLE SINK FLUSH LINE M1-0224-01 LOC: C-1

□x□ (TYP)

XWT-1652

XWT-1653

XWT-1654

XWT-1655

XWT-1656

XWT-1574

NOTE:
SDI TEST KIT (NOT SHOWN) IS INCLUDED ON THE SAMPLE SINK

MULTI MEDIA FILTER SAMPLE SINK

FSAR FIGURE 9.2-4A

THIS DRAWING CREATED ELECTRONICALLY

DRAWING M1-0224-01 REV CP-17 HAS BEEN SPLIT INTO THE FOLLOWING SHEETS:
M1-0224-01
M1-0224-01F
M1-0224-01G
M1-0224-01H
M1-0224-01J
M1-0224-01K
M1-0224-01L
M1-0224-01M
M1-0224-01N

NON-SAFETY

LUMINANT
CPNPP
GLEN ROSE, TEXAS

FLOW DIAGRAM
SURFACE WATER
PRE-TREATMENT SYSTEM

DWG. NO.	SH. NO.	REV.
M1-0224	01G	CP-8

$$$$$$$$DATE$$$$$$

me103180.dgn A M1-0224-01G

< FINAL PRINT >

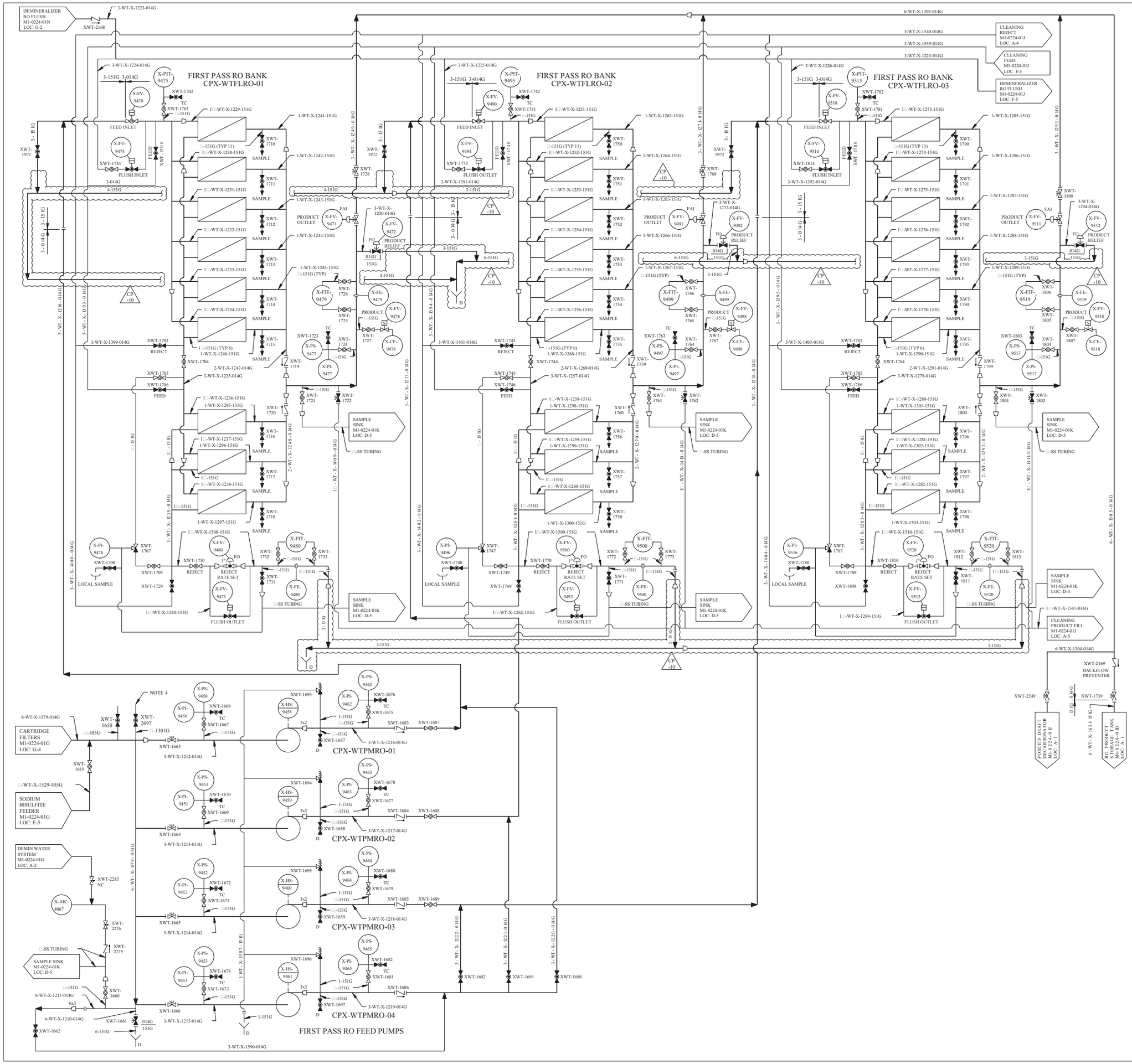

REV	DWN	CHKD	APVD	REMARKS
CP-10	DLK 06-10 2014			THIS DRAWING REVISED TO INCORPORATE AI-CR-2014-006805-1 TO EDITORIALLY CORRECT THE DRAIN LINES DOWN STREAM OF X-FV-9480, X-FV-9500 AND X-FV-9520. ALSO EDITORIALLY CORRECT THE DRAIN LINES DOWN STREAM OF X-FV-9472, X-FV-9492, X-FV-9512, XWT-1971, XWT-1972 AND XWT-1973.

NOTES:

1. FOR GENERAL NOTES AND SYMBOLS SEE DRAWING M1-0200.
2. UNLESS OTHERWISE NOTED ALL DRAINS COLLECTED BY LOCAL DRAIN SYSTEM.
3. GLEGG WATER CONDITIONING, INC. DRAWING 2011P1-3.
4. CHEMICAL INJECTION FITTING FOR USE AT THE DISCRETION OF THE CHEMISTRY DEPARTMENT.

FSAR FIGURE 9.2-4A

THIS DRAWING CREATED ELECTRONICALLY

DRAWING M1-0224-01 REV CP-17
HAS BEEN SPLIT INTO THE FOLLOWING SHEETS:

M1-0224-01
M1-0224-01F
M1-0224-01G
M1-0224-01H
M1-0224-01J
M1-0224-01K
M1-0224-01L
M1-0224-01M
M1-0224-01N

NON-SAFETY

LUMINANT
CPNPP
GLEN ROSE, TEXAS

FLOW DIAGRAM
SURFACE WATER
PRE-TREATMENT SYSTEM

DWG. NO. M1-0224 | SH. NO. 01H | REV. CP-10

< FINAL PRINT >

REF CKD 1/20/97 CP-5

$$$$$$$DATE$$$$$$

me103190.dgn M1-0224-01H

REV	DWN	CHKD	APVD	REMARKS
CP-4	CA 08-05-1999			THIS DRAWING REVISED TO INCORPORATE DESIGN CHANGE DCN 10745 REV 1.

NOTES:

1. FOR GENERAL NOTES AND SYMBOLS SEE DRAWING M1-0200.
2. UNLESS OTHERWISE NOTED, ALL DRAINS COLLECTED BY LOCAL DRAIN SYSTEM.
3. GLEGG WATER CONDITIONING, INC DRAWING 2011P1-4.
4. FORCED DRAFT DECARBONATOR FAN FILTER IS A HEPA TYPE FILTER.
5. REMOVE BACKFLOW PREVENTER INTERNALS, ABANDON VALVE BODY XWT-2165 IN PLACE.

FORCED DRAFT DECARBONATOR CPX-WTATFD-02

FORCED DRAFT DECARBONATOR FANS

FORCED DRAFT DECARBONATOR M1-0224-01H LOC: G-5

6-WT-X-1304-014G

XWT-1738

18" MANWAY

X-HS-9530

CPX-WTAFDC-01

X-HS-9531

CPX-WTAFDC-02

6" PACKING REMOVAL CONNECTION

SEE NOTE 4

10-WT-X-1306-014G

10-WT-X-1307-014G

XWT-1820

XWT-1821

2-151G

FORCED DRAFT DECARBONATOR CLEARWELL CPX-WTATDW-02

FORCED DRAFT DECARBONATOR CLEARWELL CPX-WTATDW-03

XWT-2164

6-WT-X-1510-014G

6-WT-X-1511-014G

XWT-2165 NOTE 5

3-WT-X-1506-014G

XWT-2166

XWT-2167

WATER OUTLET

X-LE-9532

X-LE-9533

XWT-1822

XWT-1823

XWT-1824

XWT-1825

XWT-1826

XWT-1827

X-CE-9534

X-FV-9534

XWT-1830

XWT-1831

SAMPLE SINK M1-0224-01K LOC: G-4

□-SS TUBING

4-WT-X-1312-014G

4-WT-X-1313-014G

4-WT-X-1314-014G

4-WT-X-1315-014G

XWT-1832

XWT-1833

XWT-1834

XWT-1835

X-PS-9535

X-PI-9535

XWT-1837

X-PS-9536

X-PI-9536

XWT-1839

X-PS-9537

X-PI-9537

XWT-1841

X-PS-9538

X-PI-9538

XWT-1843

CPX-WTPMRO-05

CPX-WTPMRO-06

CPX-WTPMRO-07

CPX-WTPMRO-08

SECOND PASS REVERSE OSMOSIS FEED PUMPS

X-HS-9543

X-HS-9544

X-HS-9545

X-HS-9546

XWT-1862

XWT-1863

XWT-1864

XWT-1865

XWT-1866

XWT-1867

XWT-1868

XWT-1869

X-PS-9547

X-PI-9547

XWT-1845

X-PS-9548

X-PI-9548

XWT-1847

X-PS-9549

X-PI-9549

XWT-1849

X-PS-9550

X-PI-9550

XWT-1851

XWT-1844

XWT-1846

XWT-1848

XWT-1850

XWT-1852

XWT-1853

XWT-1854

XWT-1855

XWT-1856

XWT-1857

XWT-1858

XWT-1859

XWT-1860

XWT-1861

XWT-2161

XWT-2162

SECONDARY WATER SUPPLY

FEEDWATER TO SECOND PASS RO BANK 1 M1-0224-01K LOC: A-1

FEED INLET

XWT-1870 FEED

XWT-1898

FLUSH INLET 3-WT-X-1544-014G

CLEANING FEED TO SECOND PASS RO BANK 1 M1-0224-01K LOC: A-2

FEEDWATER TO SECOND PASS RO BANK 2 M1-0224-01K LOC: C-1

XWT-1900 FEED

XWT-1928

FLUSH INLET 3-WT-X-1227-014G

CLEANING FEED TO SECOND PASS RO BANK 2 M1-0224-01K LOC: C-2

FEEDWATER TO SECOND PASS RO BANK 3 M1-0224-01K LOC: E-1

XWT-1930 FEED

XWT-1958

FLUSH INLET 3-WT-X-1228-014G

CLEANING FEED TO SECOND PASS RO BANK 3 M1-0224-01K LOC: E-2

XWT-2163

3-WT-X-1555-014G

3-WT-X-1539-014G

3-WT-X-1396-014G

DEMINERALIZER RO FLUSH M1-0224-01H LOC: F-1

CLEANING FEED M1-0224-01H LOC: F-1

XWT-1974

XWT-1975

XWT-1987

XWT-1986

XWT-1984

XWT-1985

XWT-1828

XWT-1829

DCN 10745 REV 1

CP -4

X-FI-9627

X-FE-9627

X-PI-9628

KYNAR TUBING

REVERSE OSMOSIS CARTRIDGE FILTER CPX-WTFLCC-01

□-2505G

COMPRESSED AIR SYSTEM M1-0216-A LOC: E-5

INSTRUMENT AIR SYSTEM M1-0216-A LOC: G-5

PULSED AIR INJECTION SYSTEM CHM-99-000018

SECOND PASS RO BANK REJECT M1-0224-01K LOC: G-4

3-WT-X-1512-014G

CLEANING REJECT M1-0224-01H LOC: F-1

3-WT-X-1540-014G

3-WT-X-1408-014G

XWT-1962

XWT-1963

CLEANING PRODUCT FILL M1-0224-01H LOC: G-4

1□-WT-X-1541-014G

SECOND PASS RO BANK CLEAN PRODUCT FILL M1-0224-01K LOC: G-4

1-WT-X-1412-151G

2-WT-X-1390-014G

X-LS-9621

X-LE-9621

1-WT-X-1473-151G

WTR TREATMENT SYSTEM M1-0224-01G LOC: A-3

XWT-1614

18" MANWAY

XWT-1960

XWT-1961

X-LI-9622

X-TI-9629

X-TW-9629

X-TE-9620

X-TW-9620

H-9620

3-WT-X-1384-014G

XWT-1964

CLEANING SOLUTION TANK CPX-WTTNCC-01

X-PI-9625

X-HS-9623

XWT-1968

XWT-1967

XWT-1965

XWT-1989

CPX-WTPMCC-01

X-PI-9626

X-HS-9624

XWT-1970

XWT-1969

XWT-1966

XWT-2009

CPX-WTPMCC-02

XWT-1988

XWT-1980

XWT-1982

3-WT-X-1388-014G

XWT-1981

XWT-1983

3-WT-X-1389-014G

CLEANING SOLUTION FORWARDING PUMPS

XWT-1988

XWT-2163

FSAR FIGURE 9.2-4A

THIS DRAWING CREATED ELECTRONICALLY

DRAWING M1-0224-01 REV CP-17 HAS BEEN SPLIT INTO THE FOLLOWING SHEETS:
M1-0224-01
M1-0224-01F
M1-0224-01G
M1-0224-01H
M1-0224-01J
M1-0224-01K
M1-0224-01L
M1-0224-01M
M1-0224-01N

NON-SAFETY

LUMINANT
CPNPP
GLEN ROSE, TEXAS

FLOW DIAGRAM
SURFACE WATER
PRE-TREATMENT SYSTEM

DWG. NO.	SH. NO.	REV.
M1-0224	01J	CP-4

< FINAL PRINT >

me0001qi.dgn

$$$$$$$DATE$$$$$$$

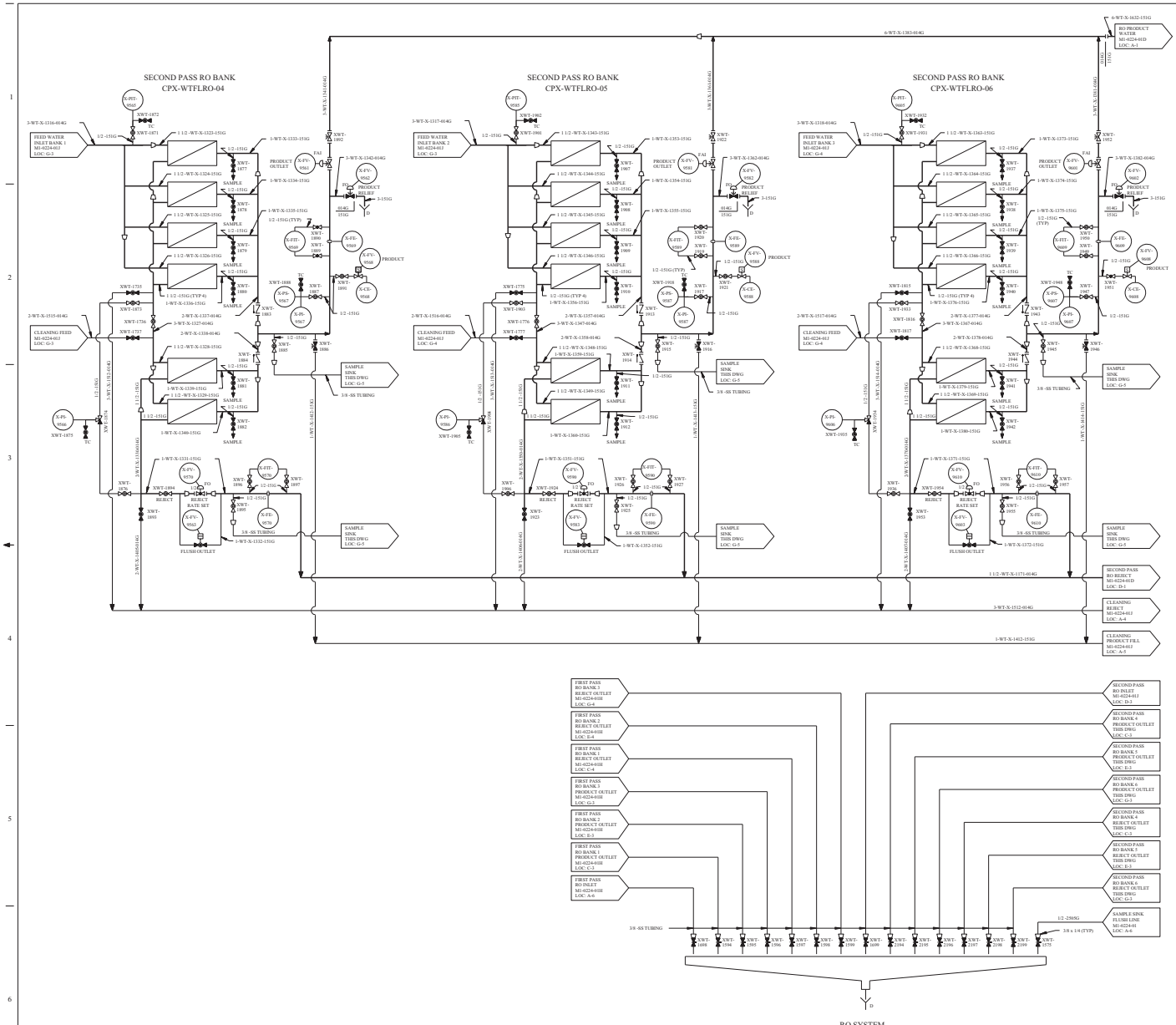

NOTE:
SAMPLE LINES ARE PROVIDED FROM EACH RO TUBE TO THE APPROPRIATE SAMPLE SINK. THESE LINES ARE NOT SHOWN.

REV	DWN	CHKD	APVD	REMARKS
CP-2	RJW 01-07-1994			THIS DRAWING REVISED TO ADD THE FSAR FIGURE NUMBER AS AN EDITORIAL CHANGE.

NOTES

1. FOR GENERAL NOTES AND SYMBOLS SEE DWG M1-0200.
2. UNLESS OTHERWISE NOTED ALL DRAINS COLLECTED BY LOCAL DRAIN SYSTEM.
3. GLEGG WATER CONDITIONING, INC. DRAWING 2011P1-5.

FSAR FIGURE 9.2-4A

THIS DRAWING CREATED ELECTRONICALLY

DRAWING M1-0224-01 REV CP-17
HAS BEEN SPLIT INTO THE FOLLOWING SHEETS:

M1-0224-01
M1-0224-01F
M1-0224-01G
M1-0224-01H
M1-0224-01J
M1-0224-01K
M1-0224-01L
M1-0224-01M
M1-0224-01N

NON-SAFETY

TXU ELECTRIC
CPSES
GLEN ROSE, TEXAS

FLOW DIAGRAM
SURFACE WATER
PRE-TREATMENT SYSTEM

DWG. NO.	SH. NO.	REV.
M1-0224	01K	CP-2

FINAL PRINT

vs00008a.dgn

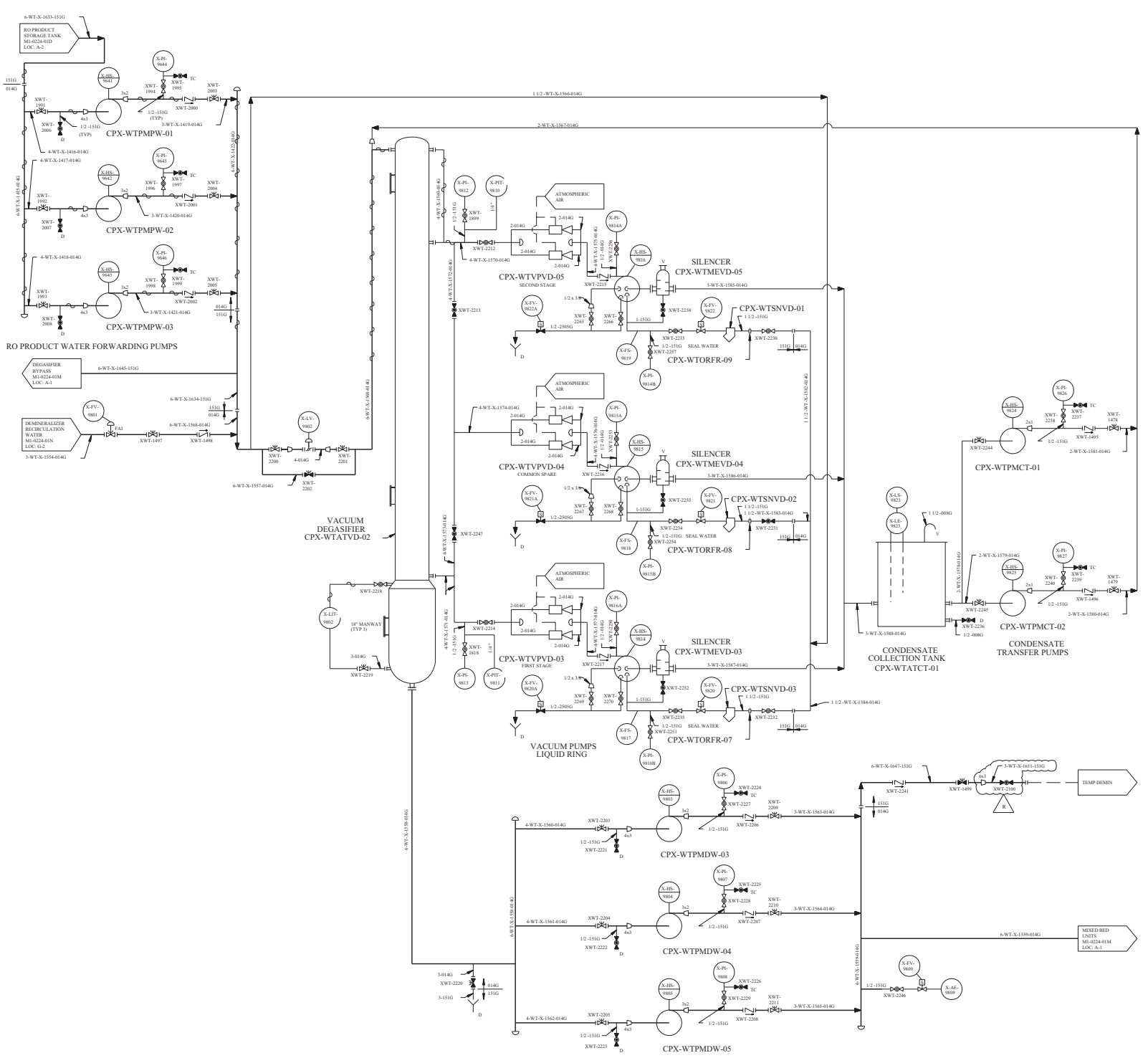

REV	DWN	CHKD	APVD	REMARKS
CP-7	DGM 02-18-2005	DM 03-18-2005		THIS DRAWING REVISED TO INCORPORATE DESIGN CHANGE FDA-2003-005573-01-00 PER SK-0001-01-005573-01-00.

NOTES

1. FOR GENERAL NOTES AND SYMBOLS SEE DRAWING M1-0200.
2. UNLESS OTHERWISE NOTED, ALL DRAINS COLLECTED BY LOCAL DRAIN SYSTEM.
3. GLEGG WATER CONDITIONING, INC DRAWING 2011P1-6 AND 2024P1-1.

FSAR FIGURE 9.2.4A

THIS DRAWING CREATED ELECTRONICALLY

DRAWING M1-0224-01 REV CP-17 HAS BEEN SPLIT INTO THE FOLLOWING SHEETS:

- M1-0224-01
- M1-0224-01F
- M1-0224-01G
- M1-0224-01H
- M1-0224-01J
- M1-0224-01K
- M1-0224-01L
- M1-0224-01M
- M1-0224-01N

NON-SAFETY

TXU POWER
CPSES
GLEN ROSE, TEXAS

FLOW DIAGRAM
SURFACE WATER
PRE-TREATMENT SYSTEM

DWG. NO.	GD. NO.	REV.
M1-0224	01L	CP-7

FINAL PRINT

REF C KD 12/08/04 CP-6

me588000.dgn M1-0224-01L

REV	DWN	CHKD	APVD	REMARKS
CP-7	JEMC 10-07-2008	DJL 10-08-2008		THIS DRAWING REVISED TO INCORPORATE DESIGN CHANGE FDA-2008-001837-01-00 PER SK-0001-08-001837-01-00.

NOTES

1. FOR GENERAL NOTES AND SYMBOLS SEE DRAWING M1-0200.
2. UNLESS OTHERWISE NOTED, ALL DRAINS COLLECTED BY LOCAL DRAIN SYSTEM.
3. GLEGG WATER CONDITIONING, INC DRAWING 2011P1-6.
4. MIXED BED VALVE POSITIONS ARE CONTROLLED BY PLC.
5. A CHEMISTRY LAB INSTRUMENT LOCATED IN THE WATER PRODUCTION LAB, USED TO MONITOR MIXED BED EFFLUENT.

R

6-WT-X-1559-014G

VACUUM DEGASIFIER M1-0224-01L LOC: G-6

6-WT-X-1645-151G

DEGASIFIER BYPASS M1-0224-01L LOC: A-3

XWT-0579 XWT-0578

6-WT-X-1542-014G

3-WT-X-1551-014G

2-WT-X-1454-014G

4-WT-X-1545-014G

3-WT-X-1423-014G

4-WT-X-1430-014G

18" MANWAY

AIR OUTLET

SERIES INLET

RESIN SAMPLE CONN

SERVICE INLET

CAUSTIC INLET

SAMPLE SINK M1-0224-01N LOC: C-1

3-WT-X-1457-014G

BACKWASH OUTLET

RINSE INLET

DRAIN DOWN 3-151G

3" x 12" SIGHTGLASSES

2" CAUSTIC RINSE

SERIES OUTLET

SERVICE OUTLET

2-WT-X-1436-014G

BACKWASH INLET

COLLECTOR OUTLET

2-WT-X-1468-014G

3-WT-X-1445-014G

RESIN REMOVAL CONN

RINSE OUTLET

AIR INLET

SAMPLE

2-WT-X-1451-014G

4-WT-X-1448-014G

3/8 -SS TUBING

SAMPLE SINK M1-0224-01N LOC: C-1

2-WT-X-1448-014G

DRAIN

14" x 18" MANWAY

MIXED BED UNIT CPX-WTDMMB-03

6-WT-X-1542-014G

3-WT-X-1552-014G

2-WT-X-1455-014G

4-WT-X-1546-014G

3-WT-X-1424-014G

4-WT-X-1431-014G

SAMPLE SINK M1-0224-01N LOC: C-1

3-WT-X-1458-014G

2-WT-X-1437-014G

2-WT-X-1469-014G

3-WT-X-1446-014G

2-WT-X-1452-014G

4-WT-X-1549-014G

3/8 -SS TUBING

SAMPLE SINK M1-0224-01N LOC: C-1

2-WT-X-1449-014G

MIXED BED UNIT CPX-WTDMMB-04

6-WT-X-1542-014G

3-WT-X-1553-014G

2-WT-X-1456-014G

4-WT-X-1547-014G

3-WT-X-1425-014G

4-WT-X-1432-014G

SAMPLE SINK M1-0224-01N LOC: C-1

3-WT-X-1459-014G

2-WT-X-1438-014G

2-WT-X-1470-014G

3-WT-X-1447-014G

2-WT-X-1453-014G

4-WT-X-1550-014G

3/8 -SS TUBING

SAMPLE SINK M1-0224-01N LOC: C-2

2-WT-X-1450-014G

MIXED BED UNIT CPX-WTDMMB-05

1 1/2 -WT-X-1460-014G

1 1/2 -WT-X-1461-014G

1 1/2 -WT-X-1462-014G

1 1/2 -WT-X-1463-014G

DILUTE ACID M1-0224-01N LOC: E-1

1 1/2 -WT-X-1464-014G

1 1/2 -WT-X-1465-014G

1 1/2 -WT-X-1466-014G

ACID INLET

1 1/2 -WT-X-1466-014G

2-WT-X-1452-014G

2-WT-X-1453-014G

3/8 -SS TUBING

2-WT-X-1471-014G

CPX-WTBLMB-01

CPX-WTBLMB-02

2-WT-X-1472-014G

MIXED BED BLOWERS

3-WT-X-1477-014G

WATER TREATMENT SYSTEM M1-0224-01N LOC: F-1

3/8 -KYNAR TUBING

3/8 -SS TUBING

LAB INSTRUMENT

NOTE 5

WATER TREATMENT LAB USE

DEMINERALIZED WATER STORAGE TANK M1-0241 LOC: A-1

6-DD-X-1014-151G

6-WT-X-1429-014G

1 1/2 -WT-X-1467-014G

DILUTE CAUSTIC M1-0224-01N LOC: G-5

FSAR FIGURE 9.2-4A

THIS DRAWING CREATED ELECTRONICALLY

DRAWING M1-0224-01 REV CP-17 HAS BEEN SPLIT INTO THE FOLLOWING SHEETS:

M1-0224-01
M1-0224-01F
M1-0224-01G
M1-0224-01H
M1-0224-01J
M1-0224-01K
M1-0224-01L
M1-0224-01M
M1-0224-01N

NON–SAFETY

LUMINANT
CPNPP
GLEN ROSE, TEXAS

FLOW DIAGRAM
SURFACE WATER
PRE-TREATMENT SYSTEM

DWG NO. M1-0224 | SH. NO. 01M | REV. CP-7

REF: CHKD 07/02/2002

SSSSSSSDATESSSSS

me894500.dgn M1-0224-01M

< FINAL PRINT >

REV	DWN	CHKD	APVD	REMARKS
CP-3	MM 01-27 2011	MH 01-27 2011		THIS DRAWING REVISED TO INCORPORATE DESIGN CHANGE FDA 2007-003115-01-02 PER SK-0053-07-003115-01-01.

NOTES:

1. FOR GENERAL NOTES AND SYMBOLS SEE M1-0200.
2. INSULATION AND HEAT TRACING TO BE PROVIDED ON ALL CAUSTIC LINES.
3. UNLESS OTHERWISE NOTED, ALL DRAINS COLLECTED BY LOCAL DRAIN SYSTEM.
4. GLEGG WATER CONDITIONING INC. DRAWING 2011P1-7.

LEGEND:

- PULSATION DAMPENER

NOTE
THE SILICA AND SODIUM ANALYZERS WILL BE MOUNTED AT THE APPROPRIATE SAMPLE SINKS.

MIXED BED EXCHANGERS SAMPLE SINK

ACID REGENERATION PUMPS

ACID REGENERATION SYSTEM

CAUSTIC REGENERATION SYSTEM

CAUSTIC REGENERATION PUMPS

DRAWING M1-0224-01 REV CP-17 HAS BEEN SPLIT INTO THE FOLLOWING SHEETS:

M1-0224-01
M1-0224-01F
M1-0224-01G
M1-0224-01H
M1-0224-01J
M1-0224-01K
M1-0224-01L
M1-0224-01M
M1-0224-01N

NON–SAFETY

LUMINANT
CPNPP
GLEN ROSE, TEXAS

FLOW DIAGRAM
SURFACE WATER
PRE-TREATMENT SYSTEM

DWG. NO. M1-0224 | SH. NO. 01N | REV. CP-3

FSAR FIGURE 9.2-4A

THIS DRAWING CREATED ELECTRONICALLY

FINAL PRINT

me103580.dgn A M1-0224-01N

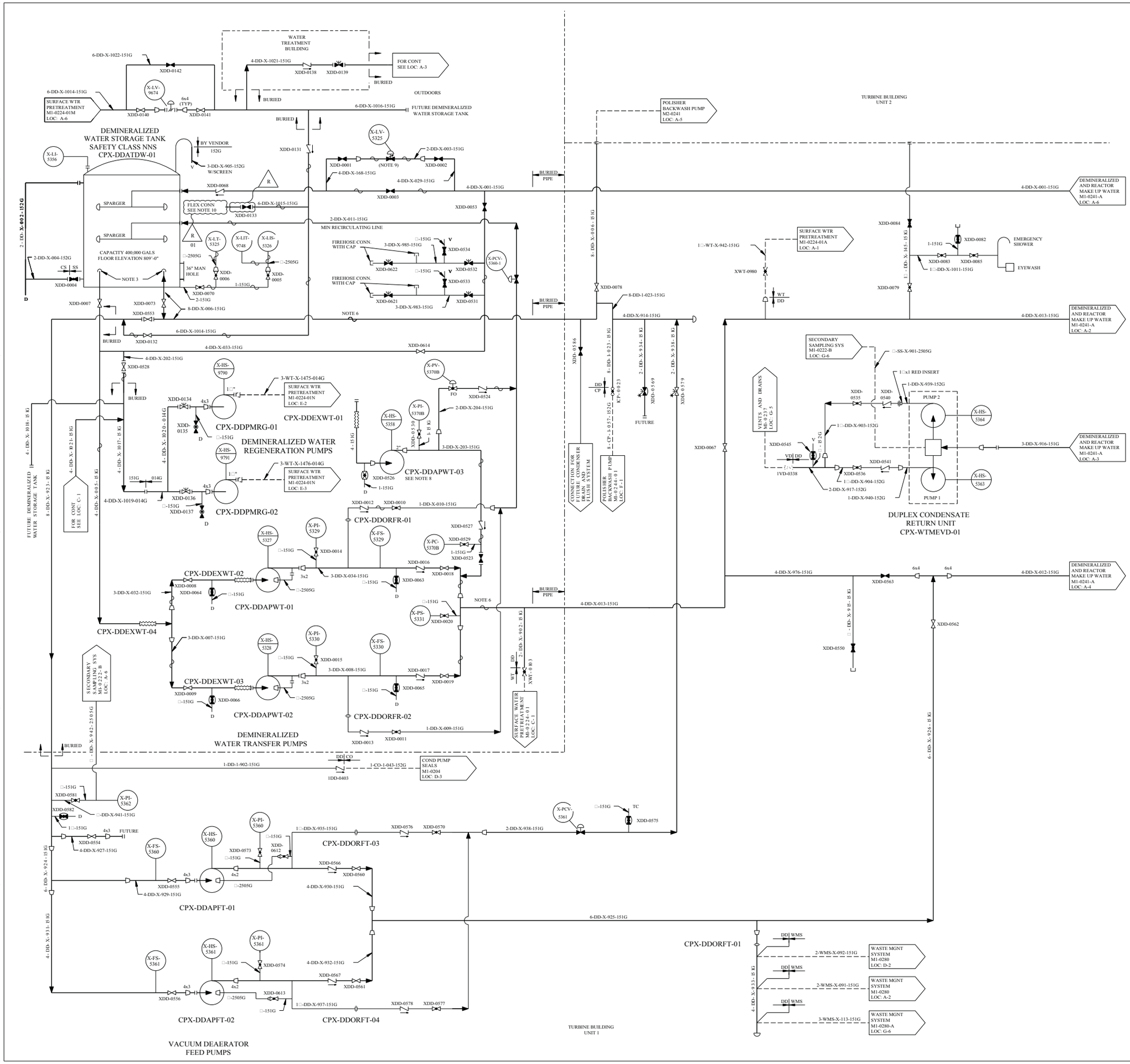

REV	DWN	CHKD	APVD	REMARKS
CP-32	MM 01-23 2013	DLK 01-23 2013		THIS DRAWING REVISED TO INCORPORATE DESIGN CHANGE FDA 2013-000008-10-01 PER SK-0001-13-000008-10-01.

NOTES:

1. FOR MECHANICAL SYMBOLS AND NOTES SEE DWG M1-0200.
2. INSTRUMENT ROOT VALVES AND TEST CONNECTIONS WILL BE □" UNLESS OTHERWISE NOTED. ALL INSTRUMENT PIPING WILL BE STAINLESS STEEL CATEGORY 151G OR 151-3 OR AS NOTED.
3. ALL NOZZLE CONNECTIONS TO DWST WILL BE 150 LB RF FLANGES.
4. ALL 1" SERVICE VALVE CONNECTIONS WILL BE FIELD PROCURED CHICAGO FITTINGS.
5. SEE HUNGERFORD AND TERRY DWG 28300-B6 FOR VENDOR VALVE IDENTIFICATIONS.
6. FREEZE PROTECTION REQUIREMENT ONLY APPLIES TO THAT PORTION OF THE LINE WHICH IS EITHER EXPOSED OUTDOORS IN THE YARD OR IS ROUTED WITHIN THE PIPE TUNNELS.
7. **UNLESS OTHERWISE NOTED, DRAINS TO BE COLLECTED BY LOCAL FLOOR DRAIN SYSTEM.**
8. **TRANSFER PUMP CPX-DDAPWT-03 IS ABANDONED IN PLACE BY DCA 87913 REV 0.**
9. THIS VALVE IS NOT USED FOR AUTO FILL OF THE DWST AND IS PLACED IN THE CLOSED POSITION PER FDA-2006-000953-01.
10. FLEX CONNECTION - MAY BE A PIPE CAP OR STORZ FITTING.

R 01

FSAR FIGURE 9.2-5

THIS DRAWING CREATED ELECTRONICALLY

DRAWING 2323-M1-0241 REV CP-8
HAS BEEN SPLIT INTO THE FOLLOWING SHEETS:
M1-0241
M1-0241-A

NON-SAFETY

LUMINANT
CPNPP
GLEN ROSE, TEXAS

FLOW DIAGRAM
DEMINERALIZED AND REACTOR
MAKE UP WATER

DWG. NO. M1-0241 | SH. NO. - | REV. CP-32

me887000.dgn

< FINAL PRINT >

REV	DWN	CHK'D	APVD	REMARKS
CP-31	RMC 11-21-2011	DJL 11-21-2011		THIS DRAWING REVISED TO INCORPORATE DESIGN CHANGE FDA 2011-000018-01-00 PER SK-0002-11-000018-01-00.

NOTES:

1. FOR MECHANICAL SYMBOLS AND NOTES SEE DWG M1-0200.
2. INSTRUMENT ROOT VALVES AND TEST CONNECTIONS WILL BE 3/4 " UNLESS OTHERWISE NOTED. ALL INSTRUMENT PIPING WILL BE STAINLESS STEEL CATEGORY 151G OR 151-3 OR AS NOTED.
3. ALL 1" SERVICE VALVE CONNECTIONS WILL BE FIELD PROCURED CHICAGO FITTINGS.
4. SEE HUNGERFORD AND TERRY DWG 28300-B6 FOR VENDOR VALVE IDENTIFICATIONS.
5. FREEZE PROTECTION REQUIREMENT ONLY APPLIES TO THAT PORTION OF THE LINE WHICH IS EITHER EXPOSED OUTDOORS, IN THE YARD OR IS ROUTED WITHIN THE PIPE TUNNELS.
6. UNLESS OTHERWISE NOTED DRAINS TO BE COLLECTED BY LOCAL FLOOR DRAIN SYSTEM.
7. XDD-0595 / XDD-0599 OR XDD-0596 / XDD-0600 MAY BE CLOSED AND XDD-0597 OR XDD-0601 MAY BE OPENED TO FLOW DEMIN WATER AT A LOSS THROUGH CPX-WTVPVD-01 OR CPX-WTVPVD-02 . CLOSE XDD-0127 OR XDD-0130 TO ISOLATE THE SEAL LOOP RESPECTIVELY.
8. VALVE NORMALLY OPEN UNLESS DEAERATED WATER TRANSFER PUMPS ARE RETURNED TO SERVICE. AT THAT TIME VALVE TO BE XDD-0076 LOCKED CLOSED.

R

DRAWING 2323-M1-0241 REV CP-8
HAS BEEN SPLIT INTO THE FOLLOWING SHEETS:

- M1-0241
- M1-0241-A

CLASS II

LUMINANT
CPNPP
GLEN ROSE, TEXAS

FLOW DIAGRAM
DEMINERALIZED AND REACTOR
MAKE UP WATER
SHEET 2 OF 6

DWG. NO.	SH. NO.	REV.
M1-0241	A	CP-31

FSAR FIGURE 9.2-5

THIS DRAWING CREATED ELECTRONICALLY

REF CHK'D 9/13/2001

me105340.dgn A M1-0241-A

FINAL PRINT

REV	DWN	CHK	APVD	REMARKS
CP-28	DLK 03-31 2014	SM 03-31 2014		THIS DRAWING REVISED TO INCORPORATE DESIGN CHANGE FDA 2013-000008-15-00 PER SK-0006-13-000008-15-00

NOTES:

1. FOR MECHANICAL SYMBOLS AND NOTES SEE DWG. M1-0200.
2. INSTRUMENT ROOT VALVES AND TEST CONNECTIONS WILL BE □" UNLESS OTHERWISE NOTED. ALL INSTRUMENT PIPING WILL BE STAINLESS STEEL CATEGORY 151G, 151-3 OR AS NOTED.
3. FREEZE PROTECTION REQUIREMENT ONLY APPLIES TO THAT PORTION OF THE LINE WHICH IS EITHER EXPOSED OUTDOORS IN THE YARD OR IS ROUTED WITHIN UNHEATED PIPE TUNNELS.
4. UNLESS OTHERWISE NOTED DRAINS TO BE COLLECTED BY LOCAL FLOOR DRAIN SYSTEM.
5. DELETED
6. DELETED

FSAR FIGURE 9.2-5

THIS DRAWING CREATED ELECTRONICALLY

CLASS I
(NUCLEAR SAFETY-RELATED)
SAFETY CLASS 1 — SEISMIC CATEGORY I
SAFETY CLASS 2 — CLASS 1E
SAFETY CLASS 3 — ASSOCIATED CIRCUITS

LUMINANT
CPNPP
GLEN ROSE, TEXAS

FLOW DIAGRAM
DEMINERALIZED AND REACTOR
MAKE UP WATER

DWG. NO. M1-0241 | SH. NO. 01 | REV. CP-28

$$$$$$$ DATE $$$$$$$ REF CKD 12/ 11/ 97 CP- 16

me744600.dgn A M1-0241-01 B C D E F G < FINAL PRINT > H

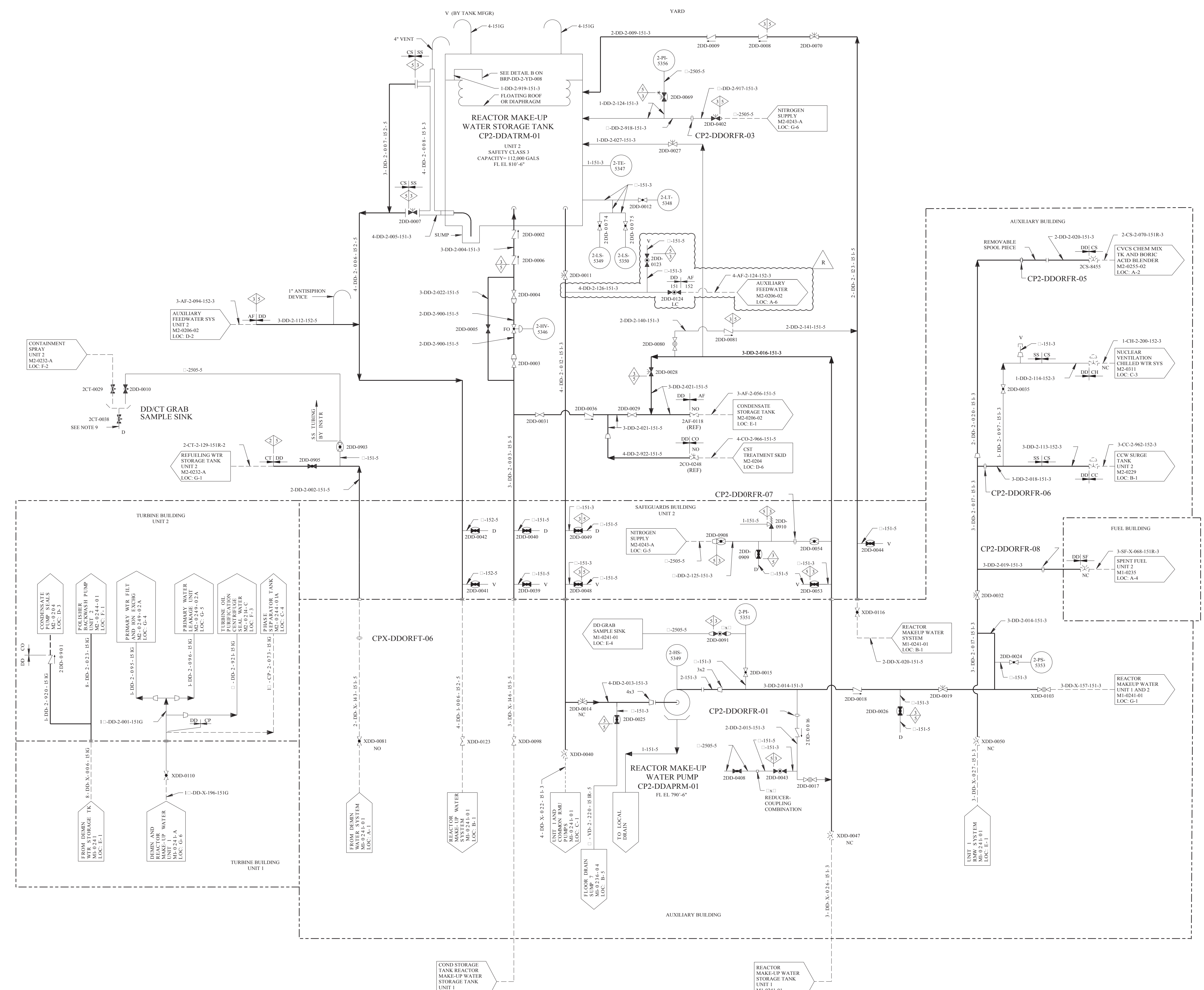

REV	DWN	CHKD	APVD	REMARKS
CP-22	DLK 10-08 2014	MM 10-18 2014		THIS DRAWING REVISED TO INCORPORATE DESIGN CHANGE FDA 2013-000008-16-00 PER SK-0002-13-000008-16-00.

NOTES:

1. FOR MECHANICAL SYMBOLS AND NOTES SEE DWG M1-0200.
2. INSTRUMENT ROOT VALVES AND TEST CONNECTIONS WILL BE □" UNLESS OTHERWISE NOTED. ALL INSTRUMENT PIPING WILL BE STAINLESS STEEL CATEGORY 151G OR 151-3 AS NOTED.
3. ALL 1" SERVICE VALVE CONNECTIONS SHOWN ON DRAWING M2-0242 WILL BE FIELD PROCURED CHICAGO FITTINGS. ALL 1□" SERVICE VALVE CONNECTIONS WILL BE FIRE HOSE CONNECTIONS.
4. DELETED
5. DELETED
6. DELETED
7. UNLESS OTHERWISE NOTED DRAINS TO BE COLLECTED BY LOCAL FLOOR DRAIN SYSTEM.
8. DELETED
9. SAMPLE SINK DRAIN COLLECTED IN A CONTAINER AND TRANSPORTED TO A DRAIN CAPABLE OF ACCEPTING RADIOACTIVE FLUIDS.
10. ACCEPTABLE SAMPLE POINT.

FSAR FIGURE 9.2-5

THIS DRAWING CREATED ELECTRONICALLY

CLASS I
(NUCLEAR SAFETY-RELATED)
SAFETY CLASS 1 SAFETY CLASS 2 SAFETY CLASS 3
SEISMIC CATEGORY I CLASS 1E ASSOCIATED CIRCUITS

LUMINANT
CPNPP
GLEN ROSE, TEXAS

FLOW DIAGRAM
DEMINERALIZED AND REACTOR
MAKE UP WATER
SHEET 1 OF 2

DWG. NO. M2-0241 | SH. NO. - | REV. CP-22

< FINAL PRINT >

me737400.dgn M2-0241

REF CKD 12/11/97 CP-14

$$$$$$DATE$$$$$$

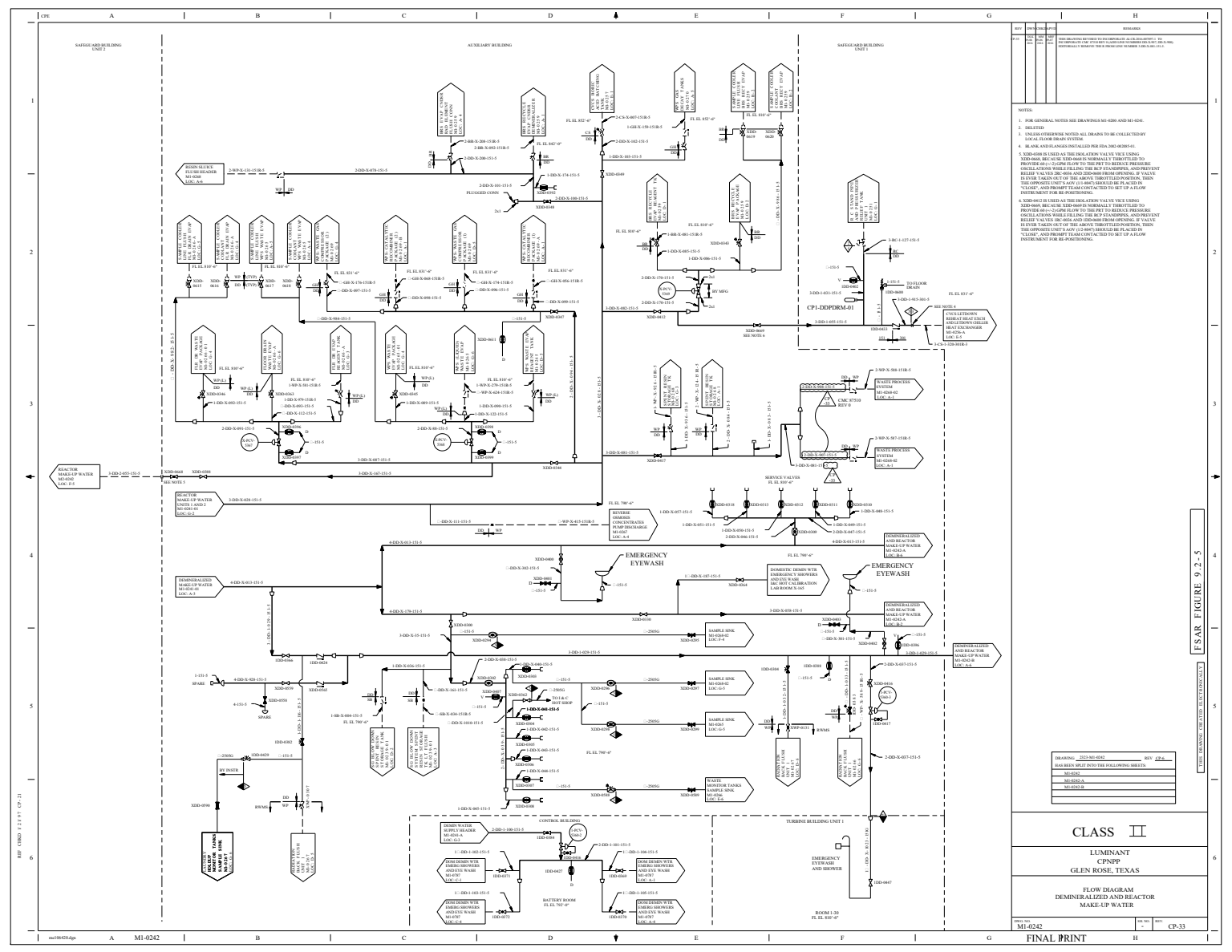
SAFEGUARD BUILDING UNIT 2
AUXILIARY BUILDING
SAFEGUARD BUILDING UNIT 1
REACTOR MAKE-UP WATER M1-0242 LOC: F-5
REACTOR MAKE-UP WATER UNITS 1 AND 2 M1-0241-01 LOC: G-3
DEMINERALIZED MAKE-UP WATER M1-0242 LOC: A-8
RESIN SLUICE FILTER HEADER M1-0240 LOC: A-6
CONTROL BUILDING
TURBINE BUILDING UNIT 1
CPI-DDPDRM-01
EMERGENCY EYEWASH
EMERGENCY EYEWASH AND SHOWER
DOM DEMIN WTR EMERG SHOWERS AND EYE WASH M1-0787 LOC: A-1
DOM DEMIN WTR EMERG SHOWERS AND EYE WASH M1-0787 LOC: A-4
DOM DEMIN WTR EMERG SHOWERS AND EYE WASH M1-0787 LOC: C-9
BATTERY ROOM FL EL 792'-0"
ROOM 1-20 FL EL 810'-6"
SEE NOTE 6
SEE NOTE a
SEE NOTE b
SEE NOTE c
SEE NOTE d
SEE NOTE e
SEE NOTE f
SEE NOTE g
SEE NOTE h
SEE NOTE i
SEE NOTE j
SEE NOTE k
SEE NOTE l
SEE NOTE m
SEE NOTE n
SEE NOTE o
SEE NOTE p
SEE NOTE q
SEE NOTE r
SEE NOTE s
SEE NOTE t
SEE NOTE u
SEE NOTE v
SEE NOTE w
SEE NOTE x
SEE NOTE y
SEE NOTE z
SEE NOTE aa
SEE NOTE ab
SEE NOTE ac
SEE NOTE ad
SEE NOTE ae
SEE NOTE af
SEE NOTE ag
SEE NOTE ah
SEE NOTE ai
SEE NOTE aj
SEE NOTE ak
SEE NOTE al
SEE NOTE am
SEE NOTE an
SEE NOTE ao
SEE NOTE ap
SEE NOTE aq
SEE NOTE ar
SEE NOTE as
SEE NOTE at
SEE NOTE au
SEE NOTE av
SEE NOTE aw
SEE NOTE ax
SEE NOTE ay
SEE NOTE az
SEE NOTE ba
SEE NOTE bb
SEE NOTE bc
SEE NOTE bd
SEE NOTE be
SEE NOTE bf
SEE NOTE bg
SEE NOTE bh
SEE NOTE bi
SEE NOTE bj
SEE NOTE bk
SEE NOTE bl
SEE NOTE bm
SEE NOTE bn
SEE NOTE bo
SEE NOTE bp
SEE NOTE bq
SEE NOTE br
SEE NOTE bs
SEE NOTE bt
SEE NOTE bu
SEE NOTE bv
SEE NOTE bw
SEE NOTE bx
SEE NOTE by
SEE NOTE bz
SEE NOTE ca
SEE NOTE cb
SEE NOTE cc
SEE NOTE cd
SEE NOTE ce
SEE NOTE cf
SEE NOTE cg
SEE NOTE ch
SEE NOTE ci
SEE NOTE cj
SEE NOTE ck
SEE NOTE cl
SEE NOTE cm
SEE NOTE cn
SEE NOTE co
SEE NOTE cp
SEE NOTE cq
SEE NOTE cr
SEE NOTE cs
SEE NOTE ct
SEE NOTE cu
SEE NOTE cv
SEE NOTE cw
SEE NOTE cx
SEE NOTE cy
SEE NOTE cz
SEE NOTE da
SEE NOTE db
SEE NOTE dc
SEE NOTE dd
SEE NOTE de
SEE NOTE df
SEE NOTE dg
SEE NOTE dh
SEE NOTE di
SEE NOTE dj
SEE NOTE dk
SEE NOTE dl
SEE NOTE dm
SEE NOTE dn
SEE NOTE do
SEE NOTE dp
SEE NOTE dq
SEE NOTE dr
SEE NOTE ds
SEE NOTE dt
SEE NOTE du
SEE NOTE dv
SEE NOTE dw
SEE NOTE dx
SEE NOTE dy
SEE NOTE dz
SEE NOTE ea
SEE NOTE eb
SEE NOTE ec
SEE NOTE ed
SEE NOTE ee
SEE NOTE ef
SEE NOTE eg
SEE NOTE eh
SEE NOTE ei
SEE NOTE ej
SEE NOTE ek
SEE NOTE el
SEE NOTE em
SEE NOTE en
SEE NOTE eo
SEE NOTE ep
SEE NOTE eq
SEE NOTE er
SEE NOTE es
SEE NOTE et
SEE NOTE eu
SEE NOTE ev
SEE NOTE ew
SEE NOTE ex
SEE NOTE ey
SEE NOTE ez
SEE NOTE fa
SEE NOTE fb
SEE NOTE fc
SEE NOTE fd
SEE NOTE fe
SEE NOTE ff
SEE NOTE fg
SEE NOTE fh
SEE NOTE fi
SEE NOTE fj
SEE NOTE fk
SEE NOTE fl
SEE NOTE fm
SEE NOTE fn
SEE NOTE fo
SEE NOTE fp
SEE NOTE fq
SEE NOTE fr
SEE NOTE fs
SEE NOTE ft
SEE NOTE fu
SEE NOTE fv
SEE NOTE fw
SEE NOTE fx
SEE NOTE fy
SEE NOTE fz
SEE NOTE ga
SEE NOTE gb
SEE NOTE gc
SEE NOTE gd
SEE NOTE ge
SEE NOTE gf
SEE NOTE gg
SEE NOTE gh
SEE NOTE gi
SEE NOTE gj
SEE NOTE gk
SEE NOTE gl
SEE NOTE gm
SEE NOTE gn
SEE NOTE go
SEE NOTE gp
SEE NOTE gq
SEE NOTE gr
SEE NOTE gs
SEE NOTE gt
SEE NOTE gu
SEE NOTE gv
SEE NOTE gw
SEE NOTE gx
SEE NOTE gy
SEE NOTE gz
SEE NOTE ha
SEE NOTE hb
SEE NOTE hc
SEE NOTE hd
SEE NOTE he
SEE NOTE hf
SEE NOTE hg
SEE NOTE hh
SEE NOTE hi
SEE NOTE hj
SEE NOTE hk
SEE NOTE hl
SEE NOTE hm
SEE NOTE hn
SEE NOTE ho
SEE NOTE hp
SEE NOTE hq
SEE NOTE hr
SEE NOTE hs
SEE NOTE ht
SEE NOTE hu
SEE NOTE hv
SEE NOTE hw
SEE NOTE hx
SEE NOTE hy
SEE NOTE hz
SEE NOTE ia
SEE NOTE ib
SEE NOTE ic
SEE NOTE id
SEE NOTE ie
SEE NOTE if
SEE NOTE ig
SEE NOTE ih
SEE NOTE ii
SEE NOTE ij
SEE NOTE ik
SEE NOTE il
SEE NOTE im
SEE NOTE in
SEE NOTE io
SEE NOTE ip
SEE NOTE iq
SEE NOTE ir
SEE NOTE is
SEE NOTE it
SEE NOTE iu
SEE NOTE iv
SEE NOTE iw
SEE NOTE ix
SEE NOTE iy
SEE NOTE iz
SEE NOTE ja
SEE NOTE jb
SEE NOTE jc
SEE NOTE jd
SEE NOTE je
SEE NOTE jf
SEE NOTE jg
SEE NOTE jh
SEE NOTE ji
SEE NOTE jj
SEE NOTE jk
SEE NOTE jl
SEE NOTE jm
SEE NOTE jn
SEE NOTE jo
SEE NOTE jp
SEE NOTE jq
SEE NOTE jr
SEE NOTE js
SEE NOTE jt
SEE NOTE ju
SEE NOTE jv
SEE NOTE jw
SEE NOTE jx
SEE NOTE jy
SEE NOTE jz
SEE NOTE ka
SEE NOTE kb
SEE NOTE kc
SEE NOTE kd
SEE NOTE ke
SEE NOTE kf
SEE NOTE kg
SEE NOTE kh
SEE NOTE ki
SEE NOTE kj
SEE NOTE kk
SEE NOTE kl
SEE NOTE km
SEE NOTE kn
SEE NOTE ko
SEE NOTE kp
SEE NOTE kq
SEE NOTE kr
SEE NOTE ks
SEE NOTE kt
SEE NOTE ku
SEE NOTE kv
SEE NOTE kw
SEE NOTE kx
SEE NOTE ky
SEE NOTE kz
SEE NOTE la
SEE NOTE lb
SEE NOTE lc
SEE NOTE ld
SEE NOTE le
SEE NOTE lf
SEE NOTE lg
SEE NOTE lh
SEE NOTE li
SEE NOTE lj
SEE NOTE lk
SEE NOTE ll
SEE NOTE lm
SEE NOTE ln
SEE NOTE lo
SEE NOTE lp
SEE NOTE lq
SEE NOTE lr
SEE NOTE ls
SEE NOTE lt
SEE NOTE lu
SEE NOTE lv
SEE NOTE lw
SEE NOTE lx
SEE NOTE ly
SEE NOTE lz
SEE NOTE ma
SEE NOTE mb
SEE NOTE mc
SEE NOTE md
SEE NOTE me
SEE NOTE mf
SEE NOTE mg
SEE NOTE mh
SEE NOTE mi
SEE NOTE mj
SEE NOTE mk
SEE NOTE ml
SEE NOTE mm
SEE NOTE mn
SEE NOTE mo
SEE NOTE mp
SEE NOTE mq
SEE NOTE mr
SEE NOTE ms
SEE NOTE mt
SEE NOTE mu
SEE NOTE mv
SEE NOTE mw
SEE NOTE mx
SEE NOTE my
SEE NOTE mz
SEE NOTE na
SEE NOTE nb
SEE NOTE nc
SEE NOTE nd
SEE NOTE ne
SEE NOTE nf
SEE NOTE ng
SEE NOTE nh
SEE NOTE ni
SEE NOTE nj
SEE NOTE nk
SEE NOTE nl
SEE NOTE nm
SEE NOTE nn
SEE NOTE no
SEE NOTE np
SEE NOTE nq
SEE NOTE nr
SEE NOTE ns
SEE NOTE nt
SEE NOTE nu
SEE NOTE nv
SEE NOTE nw
SEE NOTE nx
SEE NOTE ny
SEE NOTE nz
SEE NOTE oa
SEE NOTE ob
SEE NOTE oc
SEE NOTE od
SEE NOTE oe
SEE NOTE of
SEE NOTE og
SEE NOTE oh
SEE NOTE oi
SEE NOTE oj
SEE NOTE ok
SEE NOTE ol
SEE NOTE om
SEE NOTE on
SEE NOTE oo
SEE NOTE op
SEE NOTE oq
SEE NOTE or
SEE NOTE os
SEE NOTE ot
SEE NOTE ou
SEE NOTE ov
SEE NOTE ow
SEE NOTE ox
SEE NOTE oy
SEE NOTE oz
SEE NOTE pa
SEE NOTE pb
SEE NOTE pc
SEE NOTE pd
SEE NOTE pe
SEE NOTE pf
SEE NOTE pg
SEE NOTE ph
SEE NOTE pi
SEE NOTE pj
SEE NOTE pk
SEE NOTE pl
SEE NOTE pm
SEE NOTE pn
SEE NOTE po
SEE NOTE pp
SEE NOTE pq
SEE NOTE pr
SEE NOTE ps
SEE NOTE pt
SEE NOTE pu
SEE NOTE pv
SEE NOTE pw
SEE NOTE px
SEE NOTE py
SEE NOTE pz
SEE NOTE qa
SEE NOTE qb
SEE NOTE qc
SEE NOTE qd
SEE NOTE qe
SEE NOTE qf
SEE NOTE qg
SEE NOTE qh
SEE NOTE qi
SEE NOTE qj
SEE NOTE qk
SEE NOTE ql
SEE NOTE qm
SEE NOTE qn
SEE NOTE qo
SEE NOTE qp
SEE NOTE qq
SEE NOTE qr
SEE NOTE qs
SEE NOTE qt
SEE NOTE qu
SEE NOTE qv
SEE NOTE qw
SEE NOTE qx
SEE NOTE qy
SEE NOTE qz
SEE NOTE ra
SEE NOTE rb
SEE NOTE rc
SEE NOTE rd
SEE NOTE re
SEE NOTE rf
SEE NOTE rg
SEE NOTE rh
SEE NOTE ri
SEE NOTE rj
SEE NOTE rk
SEE NOTE rl
SEE NOTE rm
SEE NOTE rn
SEE NOTE ro
SEE NOTE rp
SEE NOTE rq
SEE NOTE rr
SEE NOTE rs
SEE NOTE rt
SEE NOTE ru
SEE NOTE rv
SEE NOTE rw
SEE NOTE rx
SEE NOTE ry
SEE NOTE rz
SEE NOTE sa
SEE NOTE sb
SEE NOTE sc
SEE NOTE sd
SEE NOTE se
SEE NOTE sf
SEE NOTE sg
SEE NOTE sh
SEE NOTE si
SEE NOTE sj
SEE NOTE sk
SEE NOTE sl
SEE NOTE sm
SEE NOTE sn
SEE NOTE so
SEE NOTE sp
SEE NOTE sq
SEE NOTE sr
SEE NOTE ss
SEE NOTE st
SEE NOTE su
SEE NOTE sv
SEE NOTE sw
SEE NOTE sx
SEE NOTE sy
SEE NOTE sz
SEE NOTE ta
SEE NOTE tb
SEE NOTE tc
SEE NOTE td
SEE NOTE te
SEE NOTE tf
SEE NOTE tg
SEE NOTE th
SEE NOTE ti
SEE NOTE tj
SEE NOTE tk
SEE NOTE tl
SEE NOTE tm
SEE NOTE tn
SEE NOTE to
SEE NOTE tp
SEE NOTE tq
SEE NOTE tr
SEE NOTE ts
SEE NOTE tt
SEE NOTE tu
SEE NOTE tv
SEE NOTE tw
SEE NOTE tx
SEE NOTE ty
SEE NOTE tz
SEE NOTE ua
SEE NOTE ub
SEE NOTE uc
SEE NOTE ud
SEE NOTE ue
SEE NOTE uf
SEE NOTE ug
SEE NOTE uh
SEE NOTE ui
SEE NOTE uj
SEE NOTE uk
SEE NOTE ul
SEE NOTE um
SEE NOTE un
SEE NOTE uo
SEE NOTE up
SEE NOTE uq
SEE NOTE ur
SEE NOTE us
SEE NOTE ut
SEE NOTE uu
SEE NOTE uv
SEE NOTE uw
SEE NOTE ux
SEE NOTE uy
SEE NOTE uz
SEE NOTE va
SEE NOTE vb
SEE NOTE vc
SEE NOTE vd
SEE NOTE ve
SEE NOTE vf
SEE NOTE vg
SEE NOTE vh
SEE NOTE vi
SEE NOTE vj
SEE NOTE vk
SEE NOTE vl
SEE NOTE vm
SEE NOTE vn
SEE NOTE vo
SEE NOTE vp
SEE NOTE vq
SEE NOTE vr
SEE NOTE vs
SEE NOTE vt
SEE NOTE vu
SEE NOTE vv
SEE NOTE vw
SEE NOTE vx
SEE NOTE vy
SEE NOTE vz
SEE NOTE wa
SEE NOTE wb
SEE NOTE wc
SEE NOTE wd
SEE NOTE we
SEE NOTE wf
SEE NOTE wg
SEE NOTE wh
SEE NOTE wi
SEE NOTE wj
SEE NOTE wk
SEE NOTE wl
SEE NOTE wm
SEE NOTE wn
SEE NOTE wo
SEE NOTE wp
SEE NOTE wq
SEE NOTE wr
SEE NOTE ws
SEE NOTE wt
SEE NOTE wu
SEE NOTE wv
SEE NOTE ww
SEE NOTE wx
SEE NOTE wy
SEE NOTE wz
SEE NOTE xa
SEE NOTE xb
SEE NOTE xc
SEE NOTE xd
SEE NOTE xe
SEE NOTE xf
SEE NOTE xg
SEE NOTE xh
SEE NOTE xi
SEE NOTE xj
SEE NOTE xk
SEE NOTE xl
SEE NOTE xm
SEE NOTE xn
SEE NOTE xo
SEE NOTE xp
SEE NOTE xq
SEE NOTE xr
SEE NOTE xs
SEE NOTE xt
SEE NOTE xu
SEE NOTE xv
SEE NOTE xw
SEE NOTE xx
SEE NOTE xy
SEE NOTE xz
SEE NOTE ya
SEE NOTE yb
SEE NOTE yc
SEE NOTE yd
SEE NOTE ye
SEE NOTE yf
SEE NOTE yg
SEE NOTE yh
SEE NOTE yi
SEE NOTE yj
SEE NOTE yk
SEE NOTE yl
SEE NOTE ym
SEE NOTE yn
SEE NOTE yo
SEE NOTE yp
SEE NOTE yq
SEE NOTE yr
SEE NOTE ys
SEE NOTE yt
SEE NOTE yu
SEE NOTE yv
SEE NOTE yw
SEE NOTE yx
SEE NOTE yy
SEE NOTE yz
SEE NOTE za
SEE NOTE zb
SEE NOTE zc
SEE NOTE zd
SEE NOTE ze
SEE NOTE zf
SEE NOTE zg
SEE NOTE zh
SEE NOTE zi
SEE NOTE zj
SEE NOTE zk
SEE NOTE zl
SEE NOTE zm
SEE NOTE zn
SEE NOTE zo
SEE NOTE zp
SEE NOTE zq
SEE NOTE zr
SEE NOTE zs
SEE NOTE zt
SEE NOTE zu
SEE NOTE zv
SEE NOTE zw
SEE NOTE zx
SEE NOTE zy
SEE NOTE zz
SEE NOTE aaa
SEE NOTE aab
SEE NOTE aac
SEE NOTE aad
SEE NOTE aae
SEE NOTE aaf
SEE NOTE aag
SEE NOTE aah
SEE NOTE aai
SEE NOTE aaj
SEE NOTE aak
SEE NOTE aal
SEE NOTE aam
SEE NOTE aan
SEE NOTE aao
SEE NOTE aap
SEE NOTE aaq
SEE NOTE aar
SEE NOTE aas
SEE NOTE aat
SEE NOTE aau
SEE NOTE aav
SEE NOTE aaw
SEE NOTE aax
SEE NOTE aay
SEE NOTE aaz
SEE NOTE aba
SEE NOTE abb
SEE NOTE abc
SEE NOTE abd
SEE NOTE abe
SEE NOTE abf
SEE NOTE abg
SEE NOTE abh
SEE NOTE abi
SEE NOTE abj
SEE NOTE abk
SEE NOTE abl
SEE NOTE abm
SEE NOTE abn
SEE NOTE abo
SEE NOTE abp
SEE NOTE abq
SEE NOTE abr
SEE NOTE abs
SEE NOTE abt
SEE NOTE abu
SEE NOTE abv
SEE NOTE abw
SEE NOTE abx
SEE NOTE aby
SEE NOTE abz
SEE NOTE aca
SEE NOTE acb
SEE NOTE acc
SEE NOTE acd
SEE NOTE ace
SEE NOTE acf
SEE NOTE acg
SEE NOTE ach
SEE NOTE aci
SEE NOTE acj
SEE NOTE ack
SEE NOTE acl
SEE NOTE acm
SEE NOTE acn
SEE NOTE aco
SEE NOTE acp
SEE NOTE acq
SEE NOTE acr
SEE NOTE acs
SEE NOTE act
SEE NOTE acu
SEE NOTE acv
SEE NOTE acw
SEE NOTE acx
SEE NOTE acy
SEE NOTE acz
SEE NOTE ada
SEE NOTE adb
SEE NOTE adc
SEE NOTE add
SEE NOTE ade
SEE NOTE adf
SEE NOTE adg
SEE NOTE adh
SEE NOTE adi
SEE NOTE adj
SEE NOTE adk
SEE NOTE adl
SEE NOTE adm
SEE NOTE adn
SEE NOTE ado
SEE NOTE adp
SEE NOTE adq
SEE NOTE adr
SEE NOTE ads
SEE NOTE adt
SEE NOTE adu
SEE NOTE adv
SEE NOTE adw
SEE NOTE adx
SEE NOTE ady
SEE NOTE adz
SEE NOTE aea
SEE NOTE aeb
SEE NOTE aec
SEE NOTE aed
SEE NOTE aee
SEE NOTE aef
SEE NOTE aeg
SEE NOTE aeh
SEE NOTE aei
SEE NOTE aej
SEE NOTE aek
SEE NOTE ael
SEE NOTE aem
SEE NOTE aen
SEE NOTE aeo
SEE NOTE aep
SEE NOTE aeq
SEE NOTE aer
SEE NOTE aes
SEE NOTE aet
SEE NOTE aeu
SEE NOTE aev
SEE NOTE aew
SEE NOTE aex
SEE NOTE aey
SEE NOTE aez
SEE NOTE afa
SEE NOTE afb
SEE NOTE afc
SEE NOTE afd
SEE NOTE afe
SEE NOTE aff
SEE NOTE afg
SEE NOTE afh
SEE NOTE afi
SEE NOTE afj
SEE NOTE afk
SEE NOTE afl
SEE NOTE afm
SEE NOTE afn
SEE NOTE afo
SEE NOTE afp
SEE NOTE afq
SEE NOTE afr
SEE NOTE afs
SEE NOTE aft
SEE NOTE afu
SEE NOTE afv
SEE NOTE afw
SEE NOTE afx
SEE NOTE afy
SEE NOTE afz
SEE NOTE aga
SEE NOTE agb
SEE NOTE agc
SEE NOTE agd
SEE NOTE age
SEE NOTE agf
SEE NOTE agg
SEE NOTE agh
SEE NOTE agi
SEE NOTE agj
SEE NOTE agk
SEE NOTE agl
SEE NOTE agm
SEE NOTE agn
SEE NOTE ago
SEE NOTE agp
SEE NOTE agq
SEE NOTE agr
SEE NOTE ags
SEE NOTE agt
SEE NOTE agu
SEE NOTE agv
SEE NOTE agw
SEE NOTE agx
SEE NOTE agy
SEE NOTE agz
SEE NOTE aha
SEE NOTE ahb
SEE NOTE ahc
SEE NOTE ahd
SEE NOTE ahe
SEE NOTE ahf
SEE NOTE ahg
SEE NOTE ahh
SEE NOTE ahi
SEE NOTE ahj
SEE NOTE ahk
SEE NOTE ahl
SEE NOTE ahm
SEE NOTE ahn
SEE NOTE aho
SEE NOTE ahp
SEE NOTE ahq
SEE NOTE ahr
SEE NOTE ahs
SEE NOTE aht
SEE NOTE ahu
SEE NOTE ahv
SEE NOTE ahw
SEE NOTE ahx
SEE NOTE ahy
SEE NOTE ahz
SEE NOTE aia
SEE NOTE aib
SEE NOTE aic
SEE NOTE aid
SEE NOTE aie
SEE NOTE aif
SEE NOTE aig
SEE NOTE aih
SEE NOTE aii
SEE NOTE aij
SEE NOTE aik
SEE NOTE ail
SEE NOTE aim
SEE NOTE ain
SEE NOTE aio
SEE NOTE aip
SEE NOTE aiq
SEE NOTE air
SEE NOTE ais
SEE NOTE ait
SEE NOTE aiu
SEE NOTE aiv
SEE NOTE aiw
SEE NOTE aix
SEE NOTE aiy
SEE NOTE aiz
SEE NOTE aja
SEE NOTE ajb
SEE NOTE ajc
SEE NOTE ajd
SEE NOTE aje
SEE NOTE ajf
SEE NOTE ajg
SEE NOTE ajh
SEE NOTE aji
SEE NOTE ajj
SEE NOTE ajk
SEE NOTE ajl
SEE NOTE ajm
SEE NOTE ajn
SEE NOTE ajo
SEE NOTE ajp
SEE NOTE ajq
SEE NOTE ajr
SEE NOTE ajs
SEE NOTE ajt
SEE NOTE aju
SEE NOTE ajv
SEE NOTE ajw
SEE NOTE ajx
SEE NOTE ajy
SEE NOTE ajz
SEE NOTE aka
SEE NOTE akb
SEE NOTE akc
SEE NOTE akd
SEE NOTE ake
SEE NOTE akf
SEE NOTE akg
SEE NOTE akh
SEE NOTE aki
SEE NOTE akj
SEE NOTE akk
SEE NOTE akl
SEE NOTE akm
SEE NOTE akn
SEE NOTE ako
SEE NOTE akp
SEE NOTE akq
SEE NOTE akr
SEE NOTE aks
SEE NOTE akt
SEE NOTE aku
SEE NOTE akv
SEE NOTE akw
SEE NOTE akx
SEE NOTE aky
SEE NOTE akz
SEE NOTE ala
SEE NOTE alb
SEE NOTE alc
SEE NOTE ald
SEE NOTE ale
SEE NOTE alf
SEE NOTE alg
SEE NOTE alh
SEE NOTE ali
SEE NOTE alj
SEE NOTE alk
SEE NOTE all
SEE NOTE alm
SEE NOTE aln
SEE NOTE alo
SEE NOTE alp
SEE NOTE alq
SEE NOTE alr
SEE NOTE als
SEE NOTE alt
SEE NOTE alu
SEE NOTE alv
SEE NOTE alw
SEE NOTE alx
SEE NOTE aly
SEE NOTE alz
SEE NOTE ama
SEE NOTE amb
SEE NOTE amc
SEE NOTE amd
SEE NOTE ame
SEE NOTE amf
SEE NOTE amg
SEE NOTE amh
SEE NOTE ami
SEE NOTE amj
SEE NOTE amk
SEE NOTE aml
SEE NOTE amm
SEE NOTE amn
SEE NOTE amo
SEE NOTE amp
SEE NOTE amq
SEE NOTE amr
SEE NOTE ams
SEE NOTE amt
SEE NOTE amu
SEE NOTE amv
SEE NOTE amw
SEE NOTE amx
SEE NOTE amy
SEE NOTE amz
SEE NOTE ana
SEE NOTE anb
SEE NOTE anc
SEE NOTE and
SEE NOTE ane
SEE NOTE anf
SEE NOTE ang
SEE NOTE anh
SEE NOTE ani
SEE NOTE anj
SEE NOTE ank
SEE NOTE anl
SEE NOTE anm
SEE NOTE ann
SEE NOTE ano
SEE NOTE anp
SEE NOTE anq
SEE NOTE anr
SEE NOTE ans
SEE NOTE ant
SEE NOTE anu
SEE NOTE anv
SEE NOTE anw
SEE NOTE anx
SEE NOTE any
SEE NOTE anz
SEE NOTE aoa
SEE NOTE aob
SEE NOTE aoc
SEE NOTE aod
SEE NOTE aoe
SEE NOTE aof
SEE NOTE aog
SEE NOTE aoh
SEE NOTE aoi
SEE NOTE aoj
SEE NOTE aok
SEE NOTE aol
SEE NOTE aom
SEE NOTE aon
SEE NOTE aoo
SEE NOTE aop
SEE NOTE aoq
SEE NOTE aor
SEE NOTE aos
SEE NOTE aot
SEE NOTE aou
SEE NOTE aov
SEE NOTE aow
SEE NOTE aox
SEE NOTE aoy
SEE NOTE aoz
SEE NOTE apa
SEE NOTE apb
SEE NOTE apc
SEE NOTE apd
SEE NOTE ape
SEE NOTE apf
SEE NOTE apg
SEE NOTE aph
SEE NOTE api
SEE NOTE apj
SEE NOTE apk
SEE NOTE apl
SEE NOTE apm
SEE NOTE apn
SEE NOTE apo
SEE NOTE app
SEE NOTE apq
SEE NOTE apr
SEE NOTE aps
SEE NOTE apt
SEE NOTE apu
SEE NOTE apv
SEE NOTE apw
SEE NOTE apx
SEE NOTE apy
SEE NOTE apz
SEE NOTE aqa
SEE NOTE aqb
SEE NOTE aqc
SEE NOTE aqd
SEE NOTE aqe
SEE NOTE aqf
SEE NOTE aqg
SEE NOTE aqh
SEE NOTE aqi
SEE NOTE aqj
SEE NOTE aqk
SEE NOTE aql
SEE NOTE aqm
SEE NOTE aqn
SEE NOTE aqo
SEE NOTE aqp
SEE NOTE aqq
SEE NOTE aqr
SEE NOTE aqs
SEE NOTE aqt
SEE NOTE aqu
SEE NOTE aqv
SEE NOTE aqw
SEE NOTE aqx
SEE NOTE aqy
SEE NOTE aqz
SEE NOTE ara
SEE NOTE arb
SEE NOTE arc
SEE NOTE ard
SEE NOTE are
SEE NOTE arf
SEE NOTE arg
SEE NOTE arh
SEE NOTE ari
SEE NOTE arj
SEE NOTE ark
SEE NOTE arl
SEE NOTE arm
SEE NOTE arn
SEE NOTE aro
SEE NOTE arp
SEE NOTE arq
SEE NOTE arr
SEE NOTE ars
SEE NOTE art
SEE NOTE aru
SEE NOTE arv
SEE NOTE arw
SEE NOTE arx
SEE NOTE ary
SEE NOTE arz
SEE NOTE asa
SEE NOTE asb
SEE NOTE asc
SEE NOTE asd
SEE NOTE ase
SEE NOTE asf
SEE NOTE asg
SEE NOTE ash
SEE NOTE asi
SEE NOTE asj
SEE NOTE ask
SEE NOTE asl
SEE NOTE asm
SEE NOTE asn
SEE NOTE aso
SEE NOTE asp
SEE NOTE asq
SEE NOTE asr
SEE NOTE ass
SEE NOTE ast
SEE NOTE asu
SEE NOTE asv
SEE NOTE asw
SEE NOTE asx
SEE NOTE asy
SEE NOTE asz
SEE NOTE ata
SEE NOTE atb
SEE NOTE atc
SEE NOTE atd
SEE NOTE ate
SEE NOTE atf
SEE NOTE atg
SEE NOTE ath
SEE NOTE ati
SEE NOTE atj
SEE NOTE atk
SEE NOTE atl
SEE NOTE atm
SEE NOTE atn
SEE NOTE ato
SEE NOTE atp
SEE NOTE atq
SEE NOTE atr
SEE NOTE ats
SEE NOTE att
SEE NOTE atu
SEE NOTE atv
SEE NOTE atw
SEE NOTE atx
SEE NOTE aty
SEE NOTE atz
SEE NOTE aua
SEE NOTE aub
SEE NOTE auc
SEE NOTE aud
SEE NOTE aue
SEE NOTE auf
SEE NOTE aug
SEE NOTE auh
SEE NOTE aui
SEE NOTE auj
SEE NOTE auk
SEE NOTE aul
SEE NOTE aum
SEE NOTE aun
SEE NOTE auo
SEE NOTE aup
SEE NOTE auq
SEE NOTE aur
SEE NOTE aus
SEE NOTE aut
SEE NOTE auu
SEE NOTE auv
SEE NOTE auw
SEE NOTE aux
SEE NOTE auy
SEE NOTE auz
SEE NOTE ava
SEE NOTE avb
SEE NOTE avc
SEE NOTE avd
SEE NOTE ave
SEE NOTE avf
SEE NOTE avg
SEE NOTE avh
SEE NOTE avi
SEE NOTE avj
SEE NOTE avk
SEE NOTE avl
SEE NOTE avm
SEE NOTE avn
SEE NOTE avo
SEE NOTE avp
SEE NOTE avq
SEE NOTE avr
SEE NOTE avs
SEE NOTE avt
SEE NOTE avu
SEE NOTE avv
SEE NOTE avw
SEE NOTE avx
SEE NOTE avy
SEE NOTE avz
SEE NOTE awa
SEE NOTE awb
SEE NOTE awc
SEE NOTE awd
SEE NOTE awe
SEE NOTE awf
SEE NOTE awg
SEE NOTE awh
SEE NOTE awi
SEE NOTE awj
SEE NOTE awk
SEE NOTE awl
SEE NOTE awm
SEE NOTE awn
SEE NOTE awo
SEE NOTE awp
SEE NOTE awq
SEE NOTE awr
SEE NOTE aws
SEE NOTE awt
SEE NOTE awu
SEE NOTE awv
SEE NOTE aww
SEE NOTE awx
SEE NOTE awy
SEE NOTE awz
SEE NOTE axa
SEE NOTE axb
SEE NOTE axc
SEE NOTE axd
SEE NOTE axe
SEE NOTE axf
SEE NOTE axg
SEE NOTE axh
SEE NOTE axi
SEE NOTE axj
SEE NOTE axk
SEE NOTE axl
SEE NOTE axm
SEE NOTE axn
SEE NOTE axo
SEE NOTE axp
SEE NOTE axq
SEE NOTE axr
SEE NOTE axs
SEE NOTE axt
SEE NOTE axu
SEE NOTE axv
SEE NOTE axw
SEE NOTE axx
SEE NOTE axy
SEE NOTE axz
SEE NOTE aya
SEE NOTE ayb
SEE NOTE ayc
SEE NOTE ayd
SEE NOTE aye
SEE NOTE ayf
SEE NOTE ayg
SEE NOTE ayh
SEE NOTE ayi
SEE NOTE ayj
SEE NOTE ayk
SEE NOTE ayl
SEE NOTE aym
SEE NOTE ayn
SEE NOTE ayo
SEE NOTE ayp
SEE NOTE ayq
SEE NOTE ayr
SEE NOTE ays
SEE NOTE ayt
SEE NOTE ayu
SEE NOTE ayv
SEE NOTE ayw
SEE NOTE ayx
SEE NOTE ayy
SEE NOTE ayz
SEE NOTE aza
SEE NOTE azb
SEE NOTE azc
SEE NOTE azd
SEE NOTE aze
SEE NOTE azf
SEE NOTE azg
SEE NOTE azh
SEE NOTE azi
SEE NOTE azj
SEE NOTE azk
SEE NOTE azl
SEE NOTE azm
SEE NOTE azn
SEE NOTE azo
SEE NOTE azp
SEE NOTE azq
SEE NOTE azr
SEE NOTE azs
SEE NOTE azt
SEE NOTE azu
SEE NOTE azv
SEE NOTE azw
SEE NOTE azx
SEE NOTE azy
SEE NOTE azz
SEE NOTE baa
SEE NOTE bab
SEE NOTE bac
SEE NOTE bad
SEE NOTE bae
SEE NOTE baf
SEE NOTE bag
SEE NOTE bah
SEE NOTE bai
SEE NOTE baj
SEE NOTE bak
SEE NOTE bal
SEE NOTE bam
SEE NOTE ban
SEE NOTE bao
SEE NOTE bap
SEE NOTE baq
SEE NOTE bar
SEE NOTE bas
SEE NOTE bat
SEE NOTE bau
SEE NOTE bav
SEE NOTE baw
SEE NOTE bax
SEE NOTE bay
SEE NOTE baz
SEE NOTE bba
SEE NOTE bbb
SEE NOTE bbc
SEE NOTE bbd
SEE NOTE bbe
SEE NOTE bbf
SEE NOTE bbg
SEE NOTE bbh
SEE NOTE bbi
SEE NOTE bbj
SEE NOTE bbk
SEE NOTE bbl
SEE NOTE bbm
SEE NOTE bbn
SEE NOTE bbo
SEE NOTE bbp
SEE NOTE bbq
SEE NOTE bbr
SEE NOTE bbs
SEE NOTE bbt
SEE NOTE bbu
SEE NOTE bbv
SEE NOTE bbw
SEE NOTE bbx
SEE NOTE bby
SEE NOTE bbz
SEE NOTE bca
SEE NOTE bcb
SEE NOTE bcc
SEE NOTE bcd
SEE NOTE bce
SEE NOTE bcf
SEE NOTE bcg
SEE NOTE bch
SEE NOTE bci
SEE NOTE bcj
SEE NOTE bck
SEE NOTE bcl
SEE NOTE bcm
SEE NOTE bcn
SEE NOTE bco
SEE NOTE bcp
SEE NOTE bcq
SEE NOTE bcr
SEE NOTE bcs
SEE NOTE bct
SEE NOTE bcu
SEE NOTE bcv
SEE NOTE bcw
SEE NOTE bcx
SEE NOTE bcy
SEE NOTE bcz
SEE NOTE bda
SEE NOTE bdb
SEE NOTE bdc
SEE NOTE bdd
SEE NOTE bde
SEE NOTE bdf
SEE NOTE bdg
SEE NOTE bdh
SEE NOTE bdi
SEE NOTE bdj
SEE NOTE bdk
SEE NOTE bdl
SEE NOTE bdm
SEE NOTE bdn
SEE NOTE bdo
SEE NOTE bdp
SEE NOTE bdq
SEE NOTE bdr
SEE NOTE bds
SEE NOTE bdt
SEE NOTE bdu
SEE NOTE bdv
SEE NOTE bdw
SEE NOTE bdx
SEE NOTE bdy
SEE NOTE bdz
SEE NOTE bea
SEE NOTE beb
SEE NOTE bec
SEE NOTE bed
SEE NOTE bee
SEE NOTE bef
SEE NOTE beg
SEE NOTE beh
SEE NOTE bei
SEE NOTE bej
SEE NOTE bek
SEE NOTE bel
SEE NOTE bem
SEE NOTE ben
SEE NOTE beo
SEE NOTE bep
SEE NOTE beq
SEE NOTE ber
SEE NOTE bes
SEE NOTE bet
SEE NOTE beu
SEE NOTE bev
SEE NOTE bew
SEE NOTE bex
SEE NOTE bey
SEE NOTE bez
SEE NOTE bfa
SEE NOTE bfb
SEE NOTE bfc
SEE NOTE bfd
SEE NOTE bfe
SEE NOTE bff
SEE NOTE bfg
SEE NOTE bfh
SEE NOTE bfi
SEE NOTE bfj
SEE NOTE bfk
SEE NOTE bfl
SEE NOTE bfm
SEE NOTE bfn
SEE NOTE bfo
SEE NOTE bfp
SEE NOTE bfq
SEE NOTE bfr
SEE NOTE bfs
SEE NOTE bft
SEE NOTE bfu
SEE NOTE bfv
SEE NOTE bfw
SEE NOTE bfx
SEE NOTE bfy
SEE NOTE bfz
SEE NOTE bga
SEE NOTE bgb
SEE NOTE bgc
SEE NOTE bgd
SEE NOTE bge
SEE NOTE bgf
SE

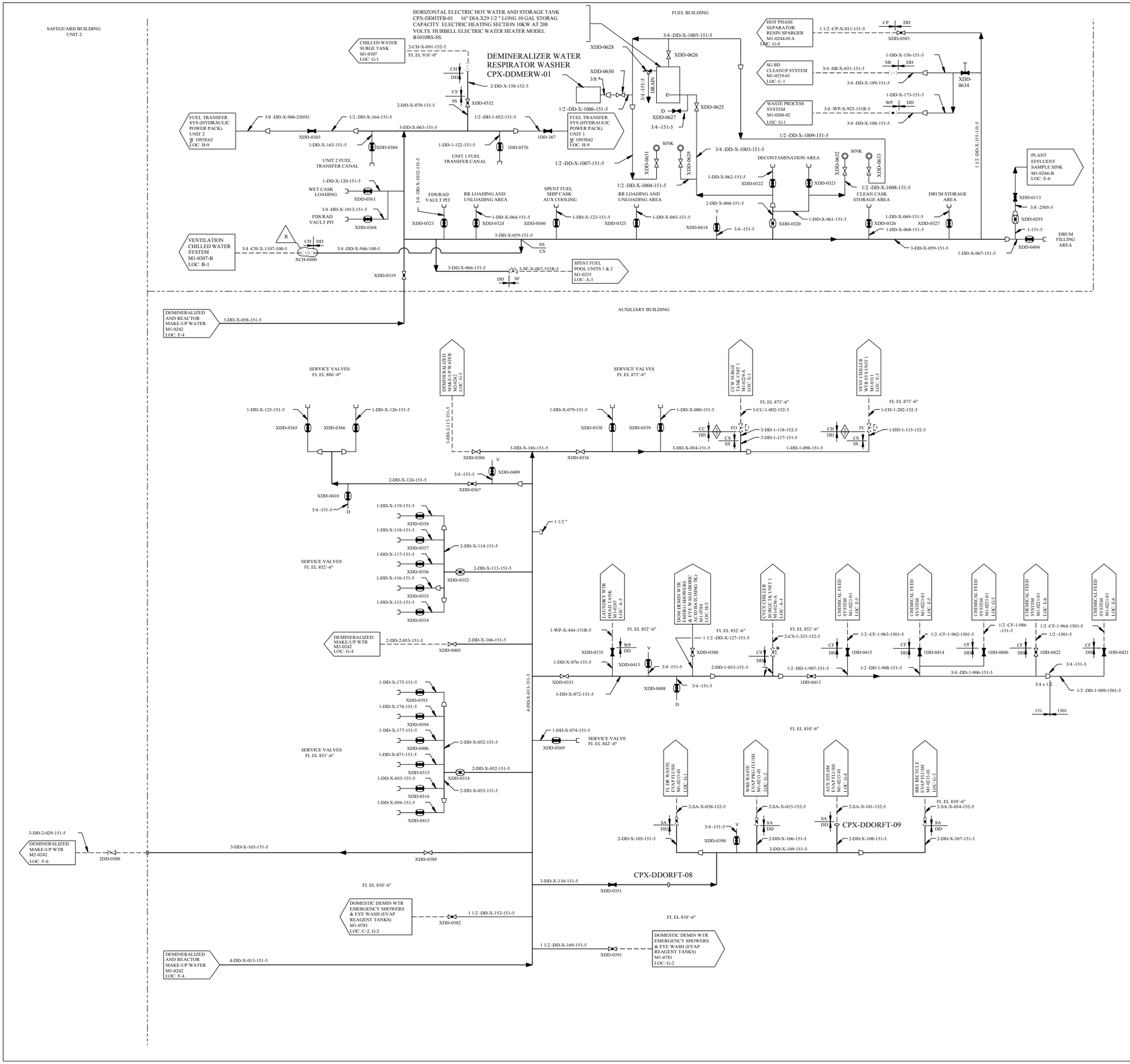

REV	DWN	CHKD	APVD	REMARKS
CP-19	DLK 05-12 2011	MM 05-12 2011		THIS DRAWING REVISED TO INCORPORATE DESIGN CHANGE FDA 2009-000859-06-03 PER SK-0039-09-000859-06-00.

NOTES:

1. FOR MECHANICAL SYMBOLS AND NOTES SEE DRAWING M1-0200.
2. FLANGED CONNECTION WITH BLIND FLANGE TO BE INSTALLED WITH UNIT 1 CONSTRUCTION.
3. UNLESS OTHERWISE NOTED ALL DRAINS TO BE COLLECTED BY LOCAL FLOOR DRAIN SYSTEM.

FSAR FIGURE 9.2-5

THIS DRAWING CREATED ELECTRONICALLY

DRAWING 2323-M1-0242 REV CP-6
HAS BEEN SPLIT INTO THE FOLLOWING SHEETS:

M1-0242
M1-0242-A
M1-0242-B

CLASS II

LUMINANT
CPNPP
GLEN ROSE, TEXAS

FLOW DIAGRAM
DEMINERALIZED AND REACTOR
MAKE-UP WATER

DWG. NO. M1-0242 | SH. NO. A | REV. CP-19

FINAL PRINT

REF CKD CP-14 10/26/96

me102270.dgn M1-0242-A

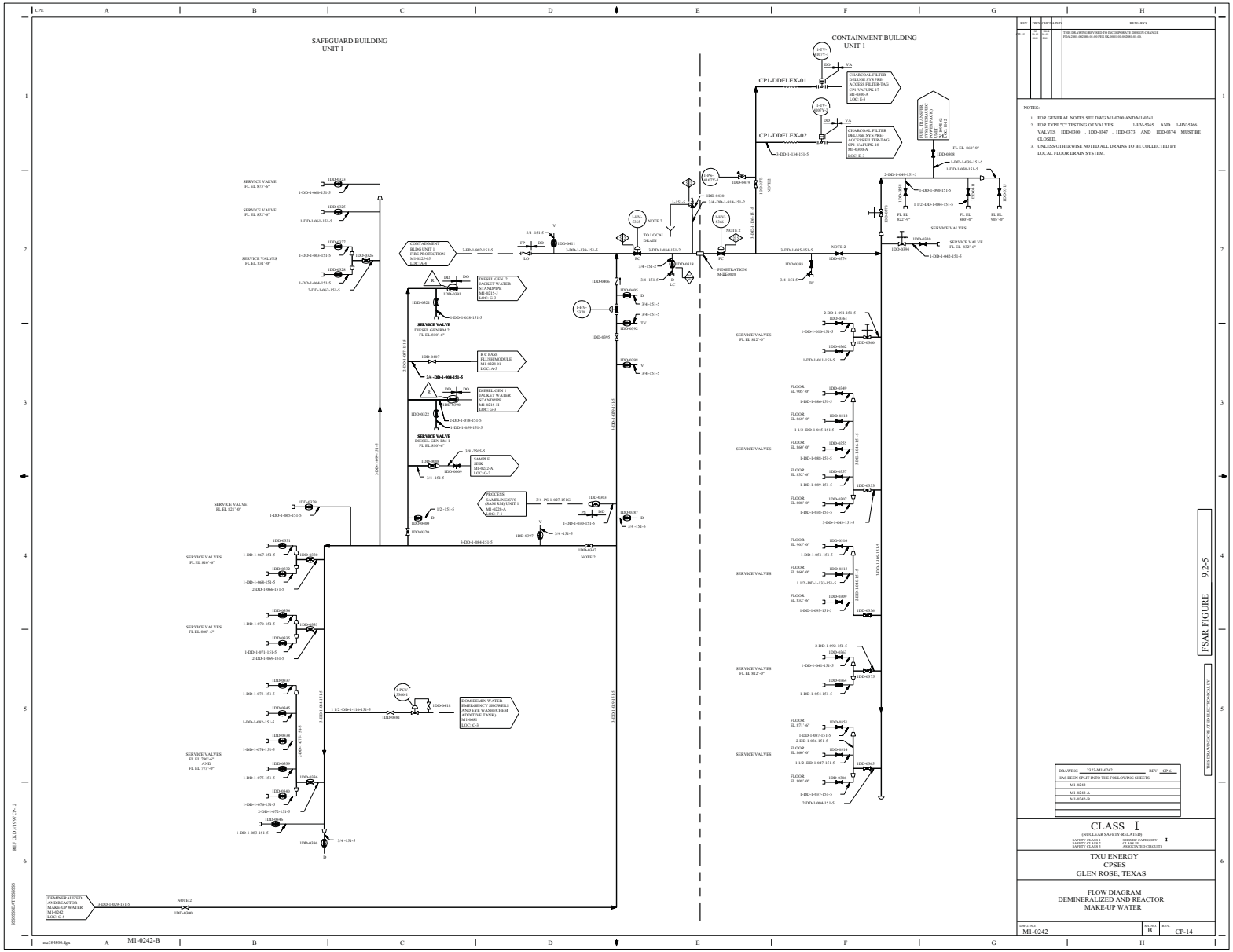

NOTES:

1. FOR GENERAL NOTES SEE DWG M1-0200 AND M1-0241.
2. FOR TYPE "C" TESTING OF VALVES 1-HV-5365 AND 1-HV-5366 VALVES 1DD-0300 , 1DD-0347 , 1DD-073 AND 1DD-0374 MUST BE CLOSED.
3. UNLESS OTHERWISE NOTED ALL DRAINS TO BE COLLECTED BY LOCAL FLOOR DRAIN SYSTEM.

REV	DWG NO	SUPS	REMARKS
CP-14	M1-0242	9.2-5	THIS DRAWING REVISED TO INCORPORATE DESIGN CHANGE TXU-2001-102300-01-01/PER ML1001-01-102300-01-00.

FSAR FIGURE 9.2-5

THIS DRAWING CAME UP FOR ELECTRONIC CONVERSION

DRAWING 2123-M1-0242 REV CP-6
HAS BEEN SPLIT INTO THE FOLLOWING SHEETS:
M1-0242
M1-0242-A
M1-0242-B

CLASS I
(NUCLEAR SAFETY-RELATED)
SAFETY CLASS 1 SEISMIC CATEGORY I
SAFETY CLASS 2 QUALITY GROUP
SAFETY CLASS 3 ASSOCIATED CIRCUITS

TXU ENERGY
CPSES
GLEN ROSE, TEXAS

FLOW DIAGRAM
DEMINERALIZED AND REACTOR
MAKE-UP WATER

DWG. NO.	ML NO.	REV.
M1-0242	B	CP-14

M1-0242-B

rsc3445500.dgn

REF OLD: 3.19.97 CN-12

SSSSSSSDAT SSSSSSS

CPE

CONTAINMENT BUILDING
UNIT 2

SAFEGUARDS BUILDING
UNIT 2

FUEL BUILDING

AUXILIARY BUILDING

REV	DWN	CHKD	APVD	REMARKS
CP-17	DLK 01-25-2006	MM 01-25-2006		THIS DRAWING REVISED TO INCORPORATE DESIGN CHANGE FDA 2002-002085-01-00 PER SK-0010-02-002085-01-00.

NOTES:

1. FOR GENERAL NOTES AND SYMBOLS SEE DRAWINGS M1-0200 AND M2-0241.
2. FOR TYPE C TESTING OF VALVES, 2-HV-5365 AND 2-HV-5366 , VALVES 2DD-0300 , 2DD-0347 , 2DD-0373 AND 2DD-0374 MUST BE CLOSED.
3. SEE UNIT 1 DWG M1-0242-A LOCATION A-5 FOR CONTINUATION.
4. ALL DRAINS TO BE CONNECTED BY LOCAL FLOOR DRAIN SYSTEM UNLESS OTHERWISE NOTED.
5. SEE M1-0242-A LOCATION C-4.
6. SEE M1-0242-A LOCATION C-3.
7. BLIND FLANGE INSTALLED PER FDA 2002-002085-01.

R

FSAR FIGURE 9.2-5

THIS DRAWING CREATED ELECTRONICALLY

CLASS I
(NUCLEAR SAFETY-RELATED)
SAFETY CLASS 1 — SEISMIC CATEGORY I
SAFETY CLASS 2 — CLASS 1E
SAFETY CLASS 3 — ASSOCIATED CIRCUITS

LUMINANT
CPSES
GLEN ROSE, TEXAS

FLOW DIAGRAM
DEMINERALIZED AND REACTOR
MAKE-UP WATER

DWG. NO. M2-0242 | SH. NO. - | REV. CP-17

REF CKD CP11 11-1-96

me871800.dgn | A M2-0242 | FINAL PRINT

REV	DWN	CHKD	APVD	REMARKS
CP-61	GAW 06-29-2016	DLK 06-29-2016		THIS DRAWING REVISED TO INCORPORATE DESIGN CHANGE FDA 2016-000119-01-00 PER SK-0001-16-000119-01-00.

NOTES:

1. FOR MECHANICAL SYMBOLS AND NOTES SEE M1-0200.
2. COMPONENTS ARE ABANDONED IN PLACE.
3. DELETED
4. HYPOCHLORINATOR FIELD PROCURED FROM WALLACE & TIERNAN HYPOCHLORINATE DESIGNED TO CHLORINATE 200 GPM FLOW RATE.
5. 2" THREADED ANGLE DRAIN VALVE WITH 1□" THREADED OUTLET SUPPLIED BY TANK SUPPLIER.
6. YARD PIPING TERMINATES AT MATCH LINE WELD ENDS. PIPELINE DESIGNATION NUMBER CHANGES AT WELD OR FIRST FLANGE. PIPING DOWNSTREAM OF DOTTED LINE IS THE RESPONSIBILITY OF SITE FACILITIES ENGINEERING.
7. DELETED
8. PROTECTIVE HOUSING IS PROVIDED FOR HYPOCHLORINATOR, SOLUTION TANKS AND INSTRUMENTS XPI-4151 AND XPS-4153 .
9. PROTECTIVE HOUSING IS PROVIDED FOR THE BATCH PLANT WELL AND METEOROLOGICAL TOWER WELL PUMPS, THE ABOVE GROUND DISCHARGE PIPING AND INSTRUMENTATION.
10. DELETED
11. DELETED
12. THE NOSF POTABLE WATER SYSTEM IS THE RESPONSIBILITY OF SITE FACILITIES ENGINEERING.
13. XXXXN INDICATES BUILDING NUMBER.
14. PIPE IS FABRICATED FROM 316L SS FROM CPX-PWATPW-01 TO XPW-0063 PER DCN 6593
15. DELETED
16. CHLORINE INJECTION PUMP CPX-PWAPCI-01 IS SUPPLIED ON A PORTABLE SKID AND IS POWERED BY 120 VOLT AC STANDARD WALL OUTLET.

DRAWING M1-0227 REV CP-32
HAS BEEN SPLIT INTO THE FOLLOWING SHEETS:

M1-0227
M1-0227-01

FSAR FIGURE 9.2-6

THIS DRAWING CREATED ELECTRONICALLY

NON-SAFETY

LUMINANT
CPNPP
GLEN ROSE, TEXAS

FLOW DIAGRAM
POTABLE AND SANITARY
WATER SYSTEM

DWG. NO.	SH. NO.	REV.
M1-0227	-	CP-61

FINAL PRINT

REF CHKD 01/30/2003

mc105580.dgn

REV	DWN	CHKD	APVD	REMARKS
CP-15	DJK 07-30-2012	GAW 07-30-2012		THIS DRAWING REVISED TO INCORPORATE DESIGN CHANGE FDA 2009-001966-01-00 PER SK-0019-09-001966-01-00.

NOTES:

1. FOR GENERAL NOTES AND SYMBOL LIST SEE DRAWING M1-0200.
2. FULL SIZE AIR CHAMBERS (EACH 1'-0" LONG) ARE TO BE PROVIDED ON WATER SUPPLY BRANCHES AT EACH PLUMBING FIXTURE.
3. A. O. OFFICE IS ABANDONED AND THE POTABLE WATER SUPPLY IS DISCONNECTED AND CAPPED.
4. XX INDICATES ROOM NUMBER

REFERENCE DRAWINGS:

1. M1-0788	PLUMBING AUXILIARY BUILDING PLAN
2. M1-0481	PLUMBING TURBINE BUILDING PLAN
3. M1-0484	PLUMBING TURBINE BUILDING PLAN
4. M2-0481	PLUMBING TURBINE BUILDING PLAN

FSAR FIGURE 9.2-6

THIS DRAWING CREATED ELECTRONICALLY

DRAWING M1-0227 REV CP-32
HAS BEEN SPLIT INTO THE FOLLOWING SHEETS:
M1-0227
M1-0227-01

NON-SAFETY

LUMINANT
CPNPP
GLEN ROSE, TEXAS

PLUMBING
TURBINE & ELEC CONTROL BLDGS
DOMESTIC WATER RISER
DIAGRAM

DWG NO.	SH NO.	REV.
M1-0227	01	CP-15

< FINAL PRINT >

REF CHKD 05/12/2003

$$$$$$$DATE$$$$$$

me105710.dgn A M1-0227-01

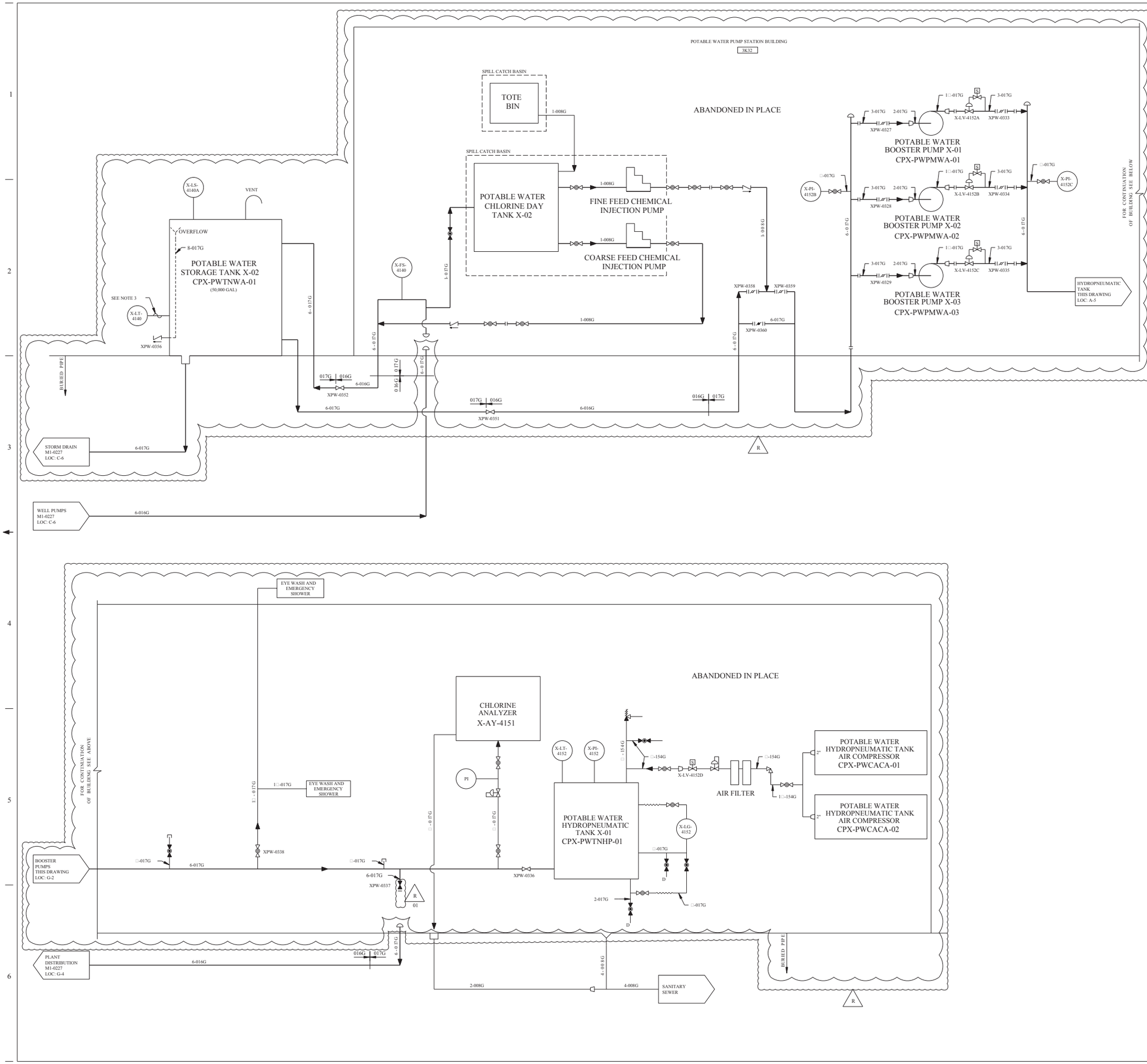

REV	DWN	CHKD	APVD	REMARKS
CP-7	DLK 10-23 2013	MM 10-23 2013		THIS DRAWING REVISED TO INCORPORATE DESIGN CHANGE FDA 2013-000044-01-02 PER SK-0002-13-000044-01-01.

NOTES:

1. FOR MECHANICAL SYMBOLS AND NOTES SEE M1-0200.
2. INSTALLED UNDER SFER 01-000017. SEE SFER FOR SUPPORTING DOCUMENTATION.
3. HEAT TRACE INSTALLED UNDER SFER 03-00007, REF DWG FN-PWE-4.

FSAR FIGURE 9.2-6

THIS DRAWING CREATED ELECTRONICALLY

NON-SAFETY

LUMINANT
CPNPP
GLEN ROSE, TEXAS

FLOW DIAGRAM
POTABLE WATER SYSTEM

DWG. NO. M1-0227 | SH. NO. 03 | REV. CP-7

< FINAL PRINT >

$$$$$$$DATE$$$$$ REF CHKD 01/30/2003 CP-2

me698000.dgn M1-0227-03

REV	DWN	CHKD	APVD	REMARKS
CP-25	DLK 01-21-2014	MM 01-22-2014		THIS DRAWING REVISED TO INCORPORATE DESIGN CHANGE FDA 2013-000008-26-00 PER SK-0002-13-000008-26-00.

NOTES:

1. CHLORINATION WATER SUPPLY. SYPHON BREAKER IS NOT REQUIRED BECAUSE A DIRECT CONNECTION TO SEWAGE IN THE PLANT DOES NOT EXIST.
2. 2" DISCHARGE LINE 2-ST-X-913-010G IS ENCASED IN 4" SCH 80 PVC PIPE.
3. THIS DRAWING HAS BEEN COMPLETELY REDRAWN TO SHOW THE GENERAL ARRANGEMENT AND TAG NUMBERS OF THE LIFT STATIONS.
4. THE FOLLOWING LINE NUMBERS ARE CAST STEEL WITH WELDED FITTINGS: 4-ST-X-940-010G
   6-ST-X-941-010G
   4-ST-X-946-010G
   4-ST-X-948-010G

REFERENCE DRAWINGS:

1. E1-0290 SERIES DRAWINGS
2. E1-0024-01

2J1 N.P.S. AND WAREHOUSE B
2J2 CALIBRATION LAB
2J3 SAFETY AND SAFE TEAM
2J10 QC LAB
LIFT STATION CPX-STAPLS-23 REF E1-0290-06
LIFT STATION CPX-STAPLS-40 AND CPX-STAPLS-41 REF E1-0290-06
LIFT STATION CPX-STAPLS-24 REF E1-0290-15
2K1 ENVIRONMENTAL AND TELECOM
2K1 WAREHOUSE A
2K7 RADIATION WAREHOUSE
LIFT STATION CPX-STAPLS-27 AND CPX-STAPLS-28 REF E1-0290-15
LIFT STATION CPX-STAPLS-26 REF E1-0290-18
LIFT STATION CPX-STAPLS-25 REF E1-0290-18
2J5 ALTERNATE ACCESS POINT SEE M1-1604 LOC: H-4
2J14 MEGAWATT SUPPORT CENTER
LIFT STATION CPX-STAPLS-15 REF E1-0290-15
LIFT STATION CPX-STAPLS-09 AND CPX-STAPLS-10 REF E1-0024-01
LIFT STATION CPX-STAPLS-29 AND CPX-STAPLS-30 REF E1-0290-11
3K14 MAGION BUILDING
3J16 WATER PRODUCTION LAB
LIFT STATION CPX-STAPLS-13 AND CPX-STAPLS-14 REF E1-0016-A
LIFT STATION CPX-STAPLS-11 AND CPX-STAPLS-12 REF E1-0290-20A
3J43 RP BLDG
LIFT STATION CPX-STAPLS-46
LIFT STATION CPX-STAPLS-31 REF E1-0290-11
3K6 WQTC & VAULT
LIFT STATION CPX-STAPLS-32 AND CPX-STAPLS-33 REF E1-0290-09
3J25 TURBINE BUILDING SEE M1-0227-02 LOC: G-5
3C1 NOSF LAB
3D1 NOSF
LIFT STATION CPX-STAPLS-19 REF E1-0290-01
3C4 GLEN ROSE TRANS
3C3 MICRO-WAVE BLDG
3D2 CPE BLDG
LIFT STATION CPX-STAPLS-44
PROTECTED AREA BOUNDARY
MATCH LINE
3J9 TURBINE SUPPORT BLDG
3K5 WAREHOUSE D
3K4 IRON FAB SHOP
3K12 PAINT SHOP
LIFT STATION CPX-STAPLS-34 REF E1-0290-12
LIFT STATION CPX-STAPLS-35 AND CPX-STAPLS-42 REF E1-0290-16
3L1 MECHANIC SHOP
3J7 MAINTENANCE SERVICES BUILDING
LIFT STATION CPX-STAPLS-01 CPX-STAPLS-02 REF E1-0008
AND
LIFT STATION CPX-STAPLS-07 AND CPX-STAPLS-08 REF E1-0290-22
3G1 SUPPORT SERVICES BLDG
3F1
3F2
3J5 MAINTENANCE BUILDING ANNEX
3J4 MAINTENANCE BUILDING SEE M1-1603 LOC: C-1
LIFT STATION CPX-STAPLS-17 AND CPX-STAPLS-18 REF E1-0290-05
LIFT STATION CPX-STAPLS-21 REF E1-0290-08
LIFT STATION CPX-STAPLS-43 REF E1-0290-22
3J3 PRIMARY ACCESS POINT
3J1 ADMINISTRATION BUILDING SEE M1-1601 LOC: B-1
LIFT STATION CPX-STAPLS-38 AND CPX-STAPLS-39 REF E1-0290-05
LIFT STATION CPX-STAPLS-37 REF E1-0290-11 & 12
STP CONTROL BLDG
3K3 SEWAGE TREATMENT PLANT
NOTE 1
XPW-0311
POTABLE WATER SYSTEM M1-0227 LOC: F-4
TO CIRCULATING WATER DISCHARGE STRUCTURE
3J2 ADMIN ANNEX BUILDING
LIFT STATION CPX-STAPLS-03 AND CPX-STAPLS-04 REF E1-0290-05
LIFT STATION CPX-STAPLS-20 AND CPX-STAPLS-45 REF E1-0290-03
LIFT STATION CPX-STAPLS-05 AND CPX-STAPLS-06 REF E1-0290-15
3G2 PERSONNEL PROCESSING CENTER
MH 1 MH 2 MH 2A MH 3 MH 4 MH 5 MH 6 MH 7 MH 8 MH 9 MH 10 MH 11 MH 12 MH 101 MH 102 MH 103 MH 104 MH 105 MH 106 MH 107 MH 108 MH 109 MH 110 MH 111 MH 112 MH 113
R

FSAR FIGURE 9.2-7

THIS DRAWING CREATED ELECTRONICALLY

NON-SAFETY

LUMINANT
CPNPP
GLEN ROSE, TEXAS

FLOW DIAGRAM
SEWAGE TREATMENT SYSTEM

DWG. NO.	SH. NO.	REV.
M1-0226	-	CP-25

$$$$$$$$ DATE$$$$$$$

me970400.dgn A M1-0226 < FINAL PRINT >

FIGURE 9.2-8

THIS FIGURE HAS BEEN DELETED. | 68

- DELETED -

AMENDMENT 10
MARCH 31, 1980

COMANCHE PEAK S.E.S.
FINAL SAFETY ANALYSIS REPORT
UNITS 1 and 2

FIGURE 9.2-9

FIGURE 9.2-10

THIS FIGURE HAS BEEN DELETED. | 68

THIS FIGURE HAS BEEN DELETED.

COMANCHE PEAK S.E.S.
FINAL SAFETY ANALYSIS REPORT
UNITS 1 and 2

FIGURE 9.2-11

DELETED

JULY 31, 1980

COMANCHE PEAK S.E.S. FINAL SAFETY ANALYSIS REPORT UNITS 1 and 2
FIGURE 9.2-12

DELETED

JULY 31, 1980

COMANCHE PEAK S.E.S. FINAL SAFETY ANALYSIS REPORT UNITS 1 and 2
FIGURE 9.2-13

LEGEND

ITEM NO.	COMPONENT
1	BRIDGE MOTOR & BRAKE
2	REDUCER
3	WHEEL ASSEMBLY
4	BUMPER
5	PILLOW BLOCK
6	PINION
7	SHAFT
8	COUPLING
9	COUPLING
10	COUPLING
11	SHAFT
12	GIRDER
13	SAFETY LUG
14	UNISTRUT
15	UNISTRUT
16	END TRUCKS
17	KEY
18	KEY
19	KEY
20	CHANNEL
21	GIRDER END TIE PLATE
22	COIL CHAIN
23	SUPPORT
24	SUPPORT
25	SUPPORT
26	GIRDER TOP TIE PLATE
27	PLATE
28	ANGLE
29	ANGLE
30	HOIST 7.5 TON
31	ANGLE
32	ANGLE
33	ANGLE
34	ANGLE
35	CHANNEL
36	PLATE
37	MOTOR & REDUCER SUPPORT
38	TROLLEY STOP
39	BOLT
40	NUT
41	WASHER

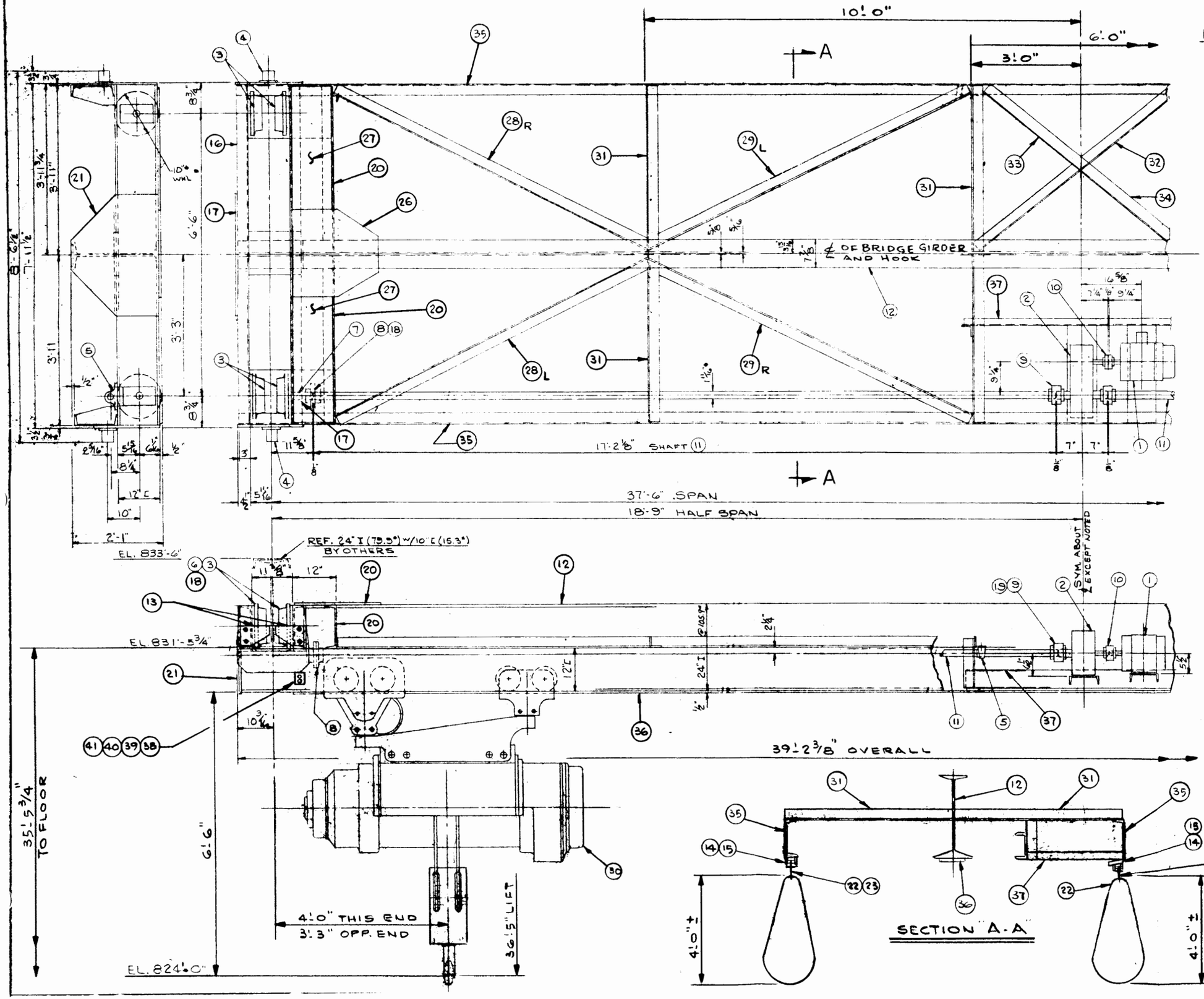

JULY 31, 1980

COMANCHE PEAK S.E.S.
FINAL SAFETY ANALYSIS REPORT
UNITS 1 and 2

SERVICE WATER INTAKE STRUCTURE CRANE

FIGURE 9.2-14

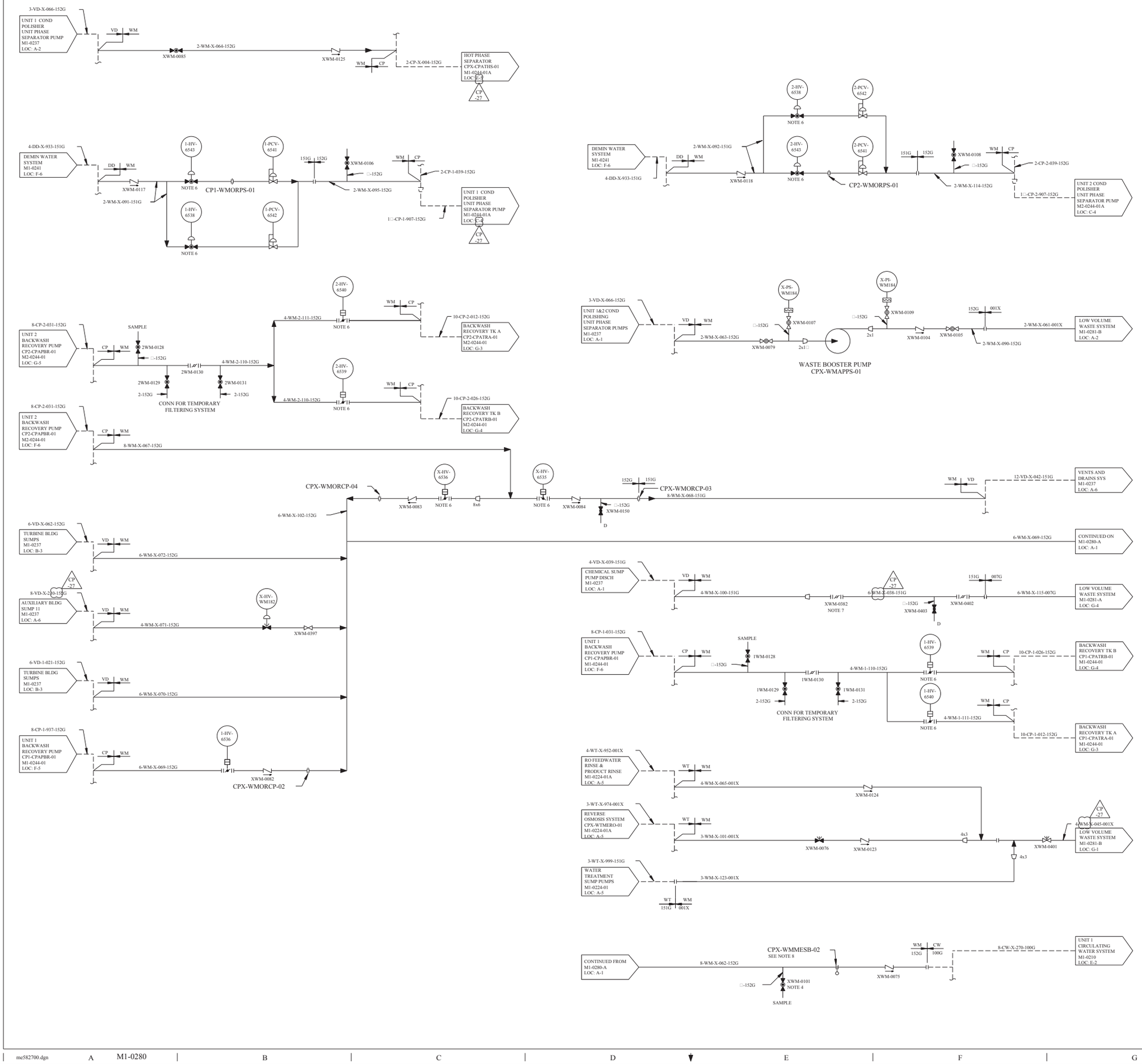

REV	DWN	CHKD	APVD	REMARKS
CP-27	DLK 09-16-2014			THIS DRAWING REVISED TO INCORPORATE AI-CR-2014-010053-1 TO EDITORIALLY CORRECT LINE NUMBER FROM WMS-X-045 TO WM-X-045 AND WMS-X-038 TO WM-X-038. EDITORIAL CHANGES AS NOTED.

NOTES:

1. UNLESS OTHERWISE NOTED, DRAINS TO BE COLLECTED BY LOCAL FLOOR DRAIN SYSTEM.
2. DELETED
3. DELETED
4. GRAB SAMPLE ADDED TO 8-WM-X-062-152G TO MONITOR OUTFALL 004 PRIOR TO DILUTION.
5. FOR MECHANICAL SYMBOLS AND NOTES SEE DRAWING M1-0200.
6. F.C. FOR LOSS OF POWER AND F.A.I. FOR LOSS OF AIR.
7. VALVE POSITION IS PROCEDURALLY CONTROLLED BY OPERATIONS/RADWASTE AND MAY BE OPEN OR CLOSED DEPENDING ON PLANT CONDITIONS AND EFFLUENT SAMPLE RESULTS.
8. **SPECTACLE FLANGE IS INSTALLED IN THE OPEN POSITION.**

FSAR FIGURE 9.2-15

THIS DRAWING CREATED ELECTRONICALLY

DRAWING TNE-M1-0280 REV CP-6
HAS BEEN SPLIT INTO THE FOLLOWING SHEETS:
M1-0280
M1-0280-A

NON-SAFETY

LUMINANT
CPNPP
GLEN ROSE, TEXAS

FLOW DIAGRAM
WASTE MANAGEMENT SYSTEM
CO-CURRENT WASTE

DWG. NO.	SH. NO.	REV.
M1-0280	-	CP-27

< FINAL PRINT >

SSSSSSSDATESSSSSS REF CHK COMP CP-27 9-16-2014

mc582700.dgn M1-0280

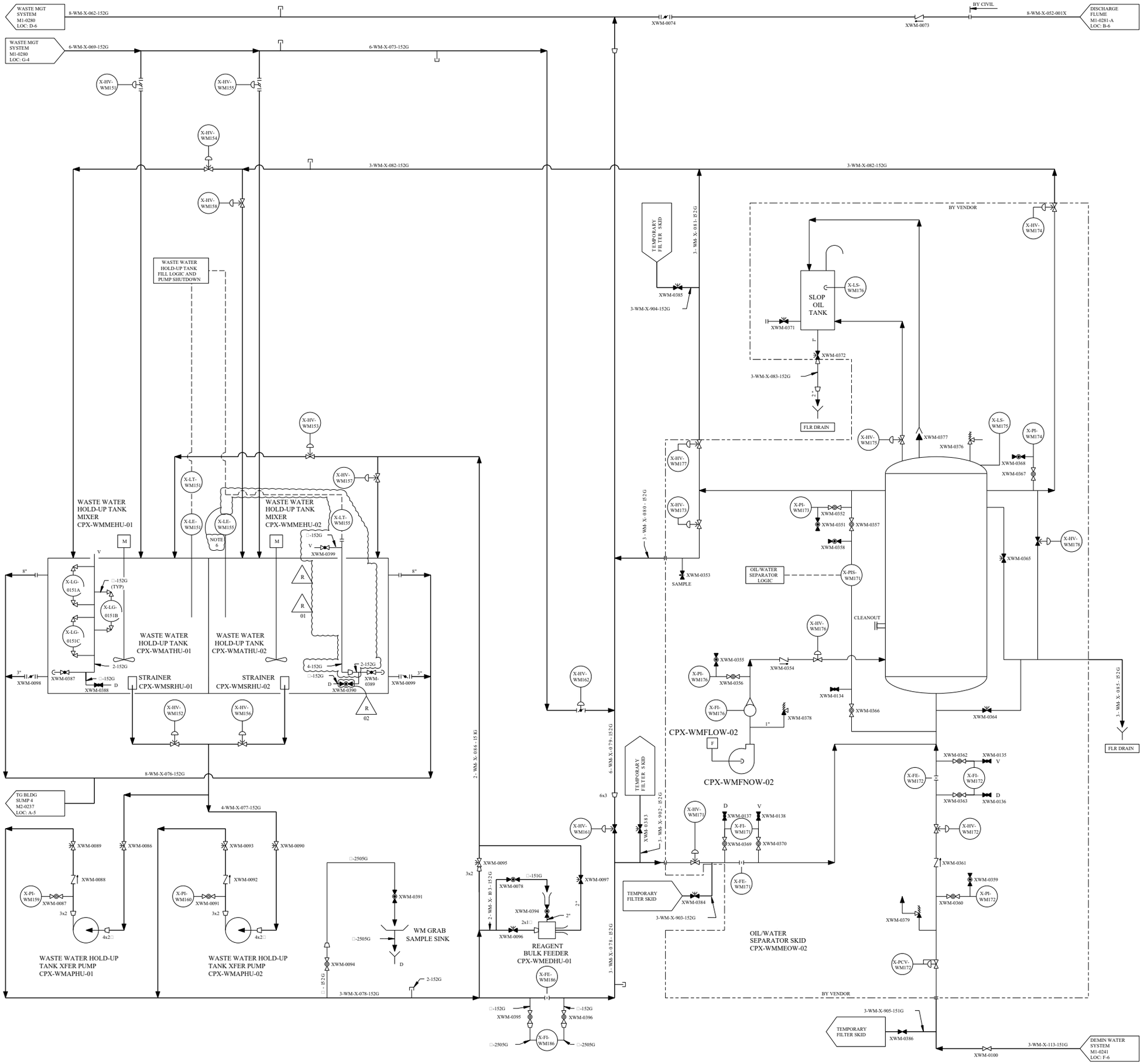

REV	DWN	CHKD	APVD	REMARKS
CP-16	DLK 06-01-2016	MM 06-02-2016		THIS DRAWING REVISED TO INCORPORATE DESIGN CHANGE FDA 2013-000217-01-04 PER SK-0002-13-000217-01-02.

NOTES:

1. DELETED
2. UNLESS OTHERWISE NOTED, DRAINS TO BE COLLECTED BY LOCAL FLOOR DRAIN SYSTEM.
3. DELETED
4. HEAT TRACE ABOVE GROUND ONLY.
5. FOR MECHANICAL SYMBOLS AND NOTES SEE DRAWING M1-0200.
6. LEVEL ELEMENT X-LE-XM155 IS ABANDONED IN PLACE. R

FSAR FIGURE 9.2-15

THIS DRAWING CREATED ELECTRONICALLY

DRAWING TNE-M1-0280 REV CP-6
HAS BEEN SPLIT INTO THE FOLLOWING SHEETS:
M1-0280
M1-0280-A

NON-SAFETY

LUMINANT
CPNPP
GLEN ROSE, TEXAS

FLOW DIAGRAM
WASTE MANAGEMENT SYSTEM
CO-CURRENT WASTE

DWG. NO. M1-0280 | SH. NO. A | REV. CP-16

FINAL PRINT

REF CHK COMP CP-13 4-17-98

mc562500.dgn A M1-0280-A

REV	DWN	CHK	APVD	REMARKS
CP-17	DUK 06-26-2012	MM 06-26-2012		THIS DRAWING REVISED TO INCORPORATE DESIGN CHANGE FDA 2012-000103-01-00 PER SK-0001-12-000103-01-00.

NOTES:

1. UNLESS OTHERWISE NOTED, ALL DRAINS COLLECTED BY LOCAL DRAIN SYSTEM.
2. DELETED
3. DELETED
4. DELETED
5. DELETED
6. DELETED
7. HEAT TRACE ABOVE GROUND ONLY.
8. DELETED

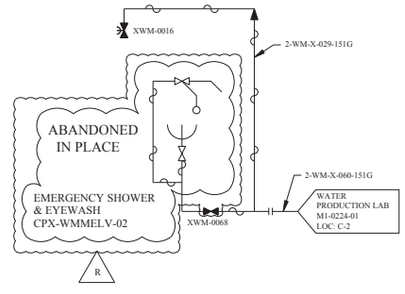

FSAR FIGURE 9.2-16

THIS DRAWING CREATED ELECTRONICALLY

DRAWING TNE-M1-0281 REV CP-7
HAS BEEN SPLIT INTO THE FOLLOWING SHEETS:
M1-0281
M1-0281-A

DRAWING M1-0281 REV CP-14
HAS BEEN SPLIT INTO THE FOLLOWING SHEETS:
M1-0281
M1-0281-B

NON-SAFETY

LUMINANT
CPNPP
GLEN ROSE, TEXAS

FLOW DIAGRAM
WASTE MANAGEMENT SYSTEM
LOW VOLUME WASTE

DWG. NO.	SH. NO.	REV.
M1-0281	-	CP-17

< FINAL PRINT >

$$$$$$$$DATE$$$$$$$$ REF CHK COMP CP-16 4-17-98

me0000vc.dgn A M1-0281 B C D E F G H

REV	DWN	CHKD	APVD	REMARKS
CP-14	CA 08-07 1998			THIS DRAWING REVISED TO INCORPORATE DESIGN CHANGE DCN 11503 REV 4.

NOTES:

1. UNLESS OTHERWISE NOTED, ALL DRAINS COLLECTED BY LOCAL DRAIN SYSTEM.
2. FOR MECHANICAL NOTES AND SYMBOLS SEE M1-0200.
3. EXISTING VALVES ARE TO BE LOCKED CLOSED UPON COMPLETION OF API SEPARATOR AND DISCHARGE TO LVW POND.
4. LVW POND IS EXISTING EAST EVAPORATION POND.
5. EVAPORATION POND HAS NO DISCHARGE OR OUTLETS.
6. NATURAL NEUTRALIZATION BASIN IS FILLED WITH 1633 CUBIC YARDS OF CRUSHED LIMESTONE.
7. HEAT TRACE ABOVE GROUND ONLY.
8. REPOSITIONING OF THE SPOOL PIECE IS SUBJECT TO SITE ADMINISTRATIVE CONTROL.
9. LINE 6-WMS-X-115-007G HAS A 1/2 " DIAMETER HOLE ON TOP PORTION OF PIPE WHICH WILL ALLOW FOR FUTURE VACUUM BREAKING CAPABILITIES.

CP -14
DCN 11503
REV 4

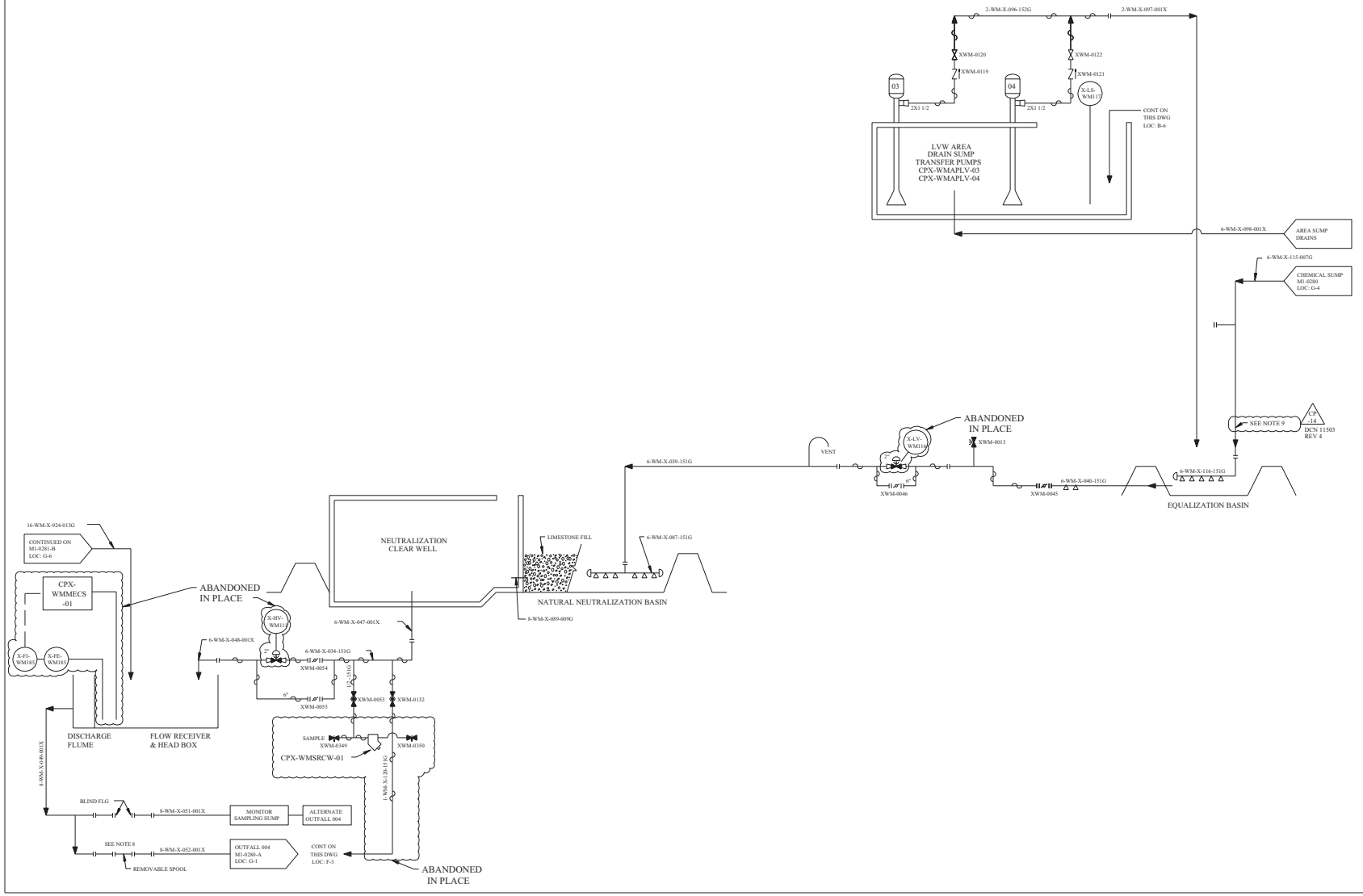

FSAR FIGURE 9.2-16

THIS DRAWING CREATED ELECTRONICALLY

DRAWING	TNE-M1-0281	REV	CP-7
HAS BEEN SPLIT INTO THE FOLLOWING SHEETS:			
M1-0281			
M1-0281-A			

NON-SAFETY

TXU ELECTRIC
CPSES
GLEN ROSE, TEXAS

FLOW DIAGRAM
WASTE MANAGEMENT SYSTEM
LOW VOLUME WASTE

DWG. NO.	SH. NO.	REV.
M1-0281	A	CP-14

REF CHK COMP CP-13 4-17-98

$$$$$$$DATE$$$$$$

me000173.dgn

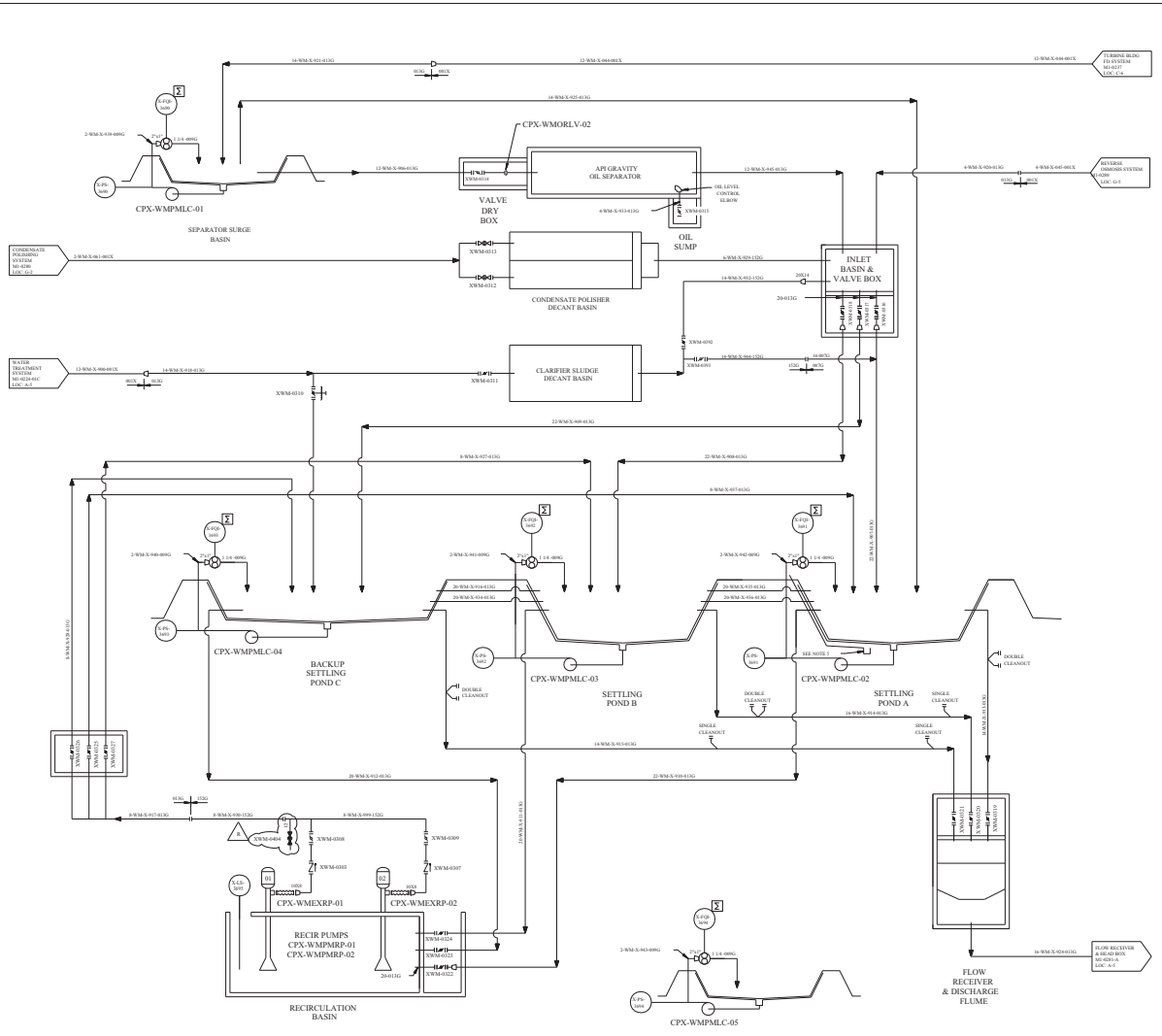

REV	DWN	CHKD	APVD	REMARKS
CP-14	MAC 10-2-14	MAC 10-2-14	MAC 10-2-14	THIS DRAWING REVISED TO INCORPORATE DESIGN CHANGE FDA-2008-005191-01-00 PER SK-0081-00-005191-01-00.

NOTES:

1. FOR MECHANICAL NOTES AND SYMBOLS SEE MI-0200.
2. UNLESS OTHERWISE NOTED, ALL DRAINS COLLECTED BY LOCAL DRAIN SYSTEM.
3. HEAT TRACE ABOVE GROUND ONLY.
4. TO DETERMINE THE CORRECT PIPE SCHEDULE for PRESSURE/ TEMPERATURE RATING FOR ANY CATEGORY 013G PIPE, SEE THE MASTER EQUIPMENT LIST AND THE "COMMENTS" THEREIN.
5. CATCH BASIN - REFER TO VENDOR DWG 719-2000-301 SH 01.

FSAR FIGURE 9.2-16

THIS DRAWING UPDATED FOR CP-14

DRAWING M1-0281 REV CP-14
HAS BEEN SPLIT INTO THE FOLLOWING SHEETS:
M1-0281
M1-0281-B

NON-SAFETY

TXU ENERGY
CPSES
GLEN ROSE, TEXAS

FLOW DIAGRAM
WASTE MANAGEMENT SYSTEM
LOW VOLUME WASTE

DWG. NO.	SH. NO.	REV.
M1-0281	B	CP-10

DO NOT SCALE DRAWING

SIEMENS NUCLEAR POWER

mc3498001.dgn

A M1-0281-B

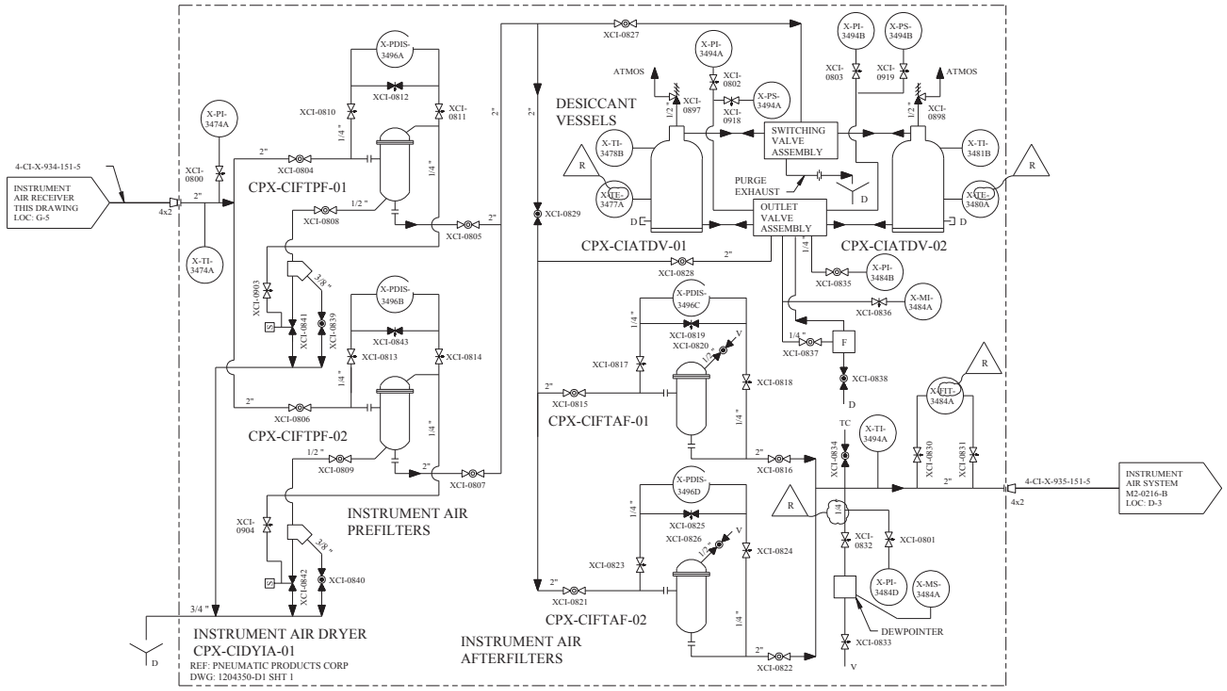

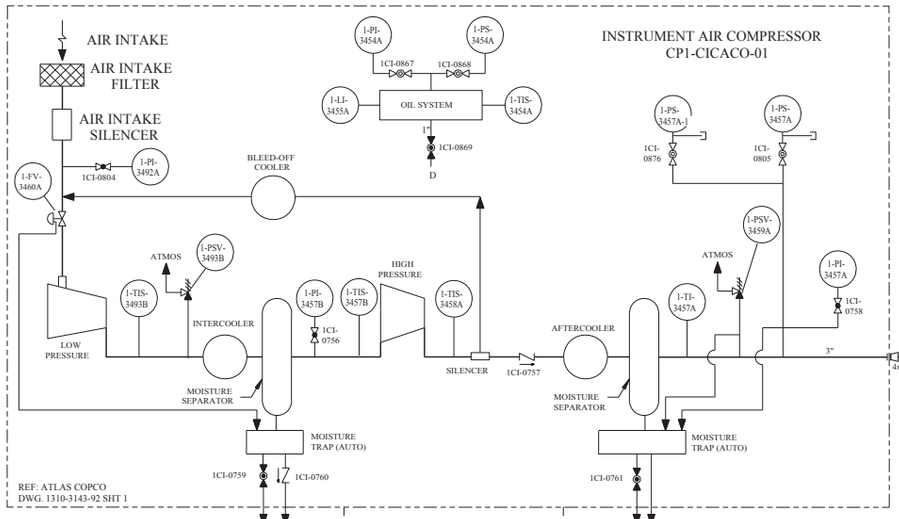

REV	DWN	CHK	APVD	REMARKS
CP-45	DLK 12-08-2004	MM 12-09-2004		THIS DRAWING REVISED TO INCORPORATE DESIGN CHANGE FDA 2001-000158-08-00 PER SK-0014-01-000158-08-00.

NOTES:

1. FOR MECHANICAL SYMBOLS AND NOTES SEE DRAWING M1-0200.
2. * SUPPLIED BY VENDOR.
3. ALL DRAINS ARE 3/4 " UNLESS OTHERWISE NOTED.
4. DELETED
5. DELETED
6. UNLESS OTHERWISE NOTED, ALL DRAINS TO BE COLLECTED BY LOCAL FLOOR DRAIN SYSTEM.
7. INSTRUMENT AIR SHALL NOT BE USED FOR BREATHING AIR WITHOUT APPROPRIATE IN LINE CHEMICAL ABSORBERS AND PARTICULATE FILTRATION. TOXIC VAPORS, FUMES AND PARTICULATES MAY BE PRESENT. REF OSHA 1910.134 (d).
8. TYPICAL CONFIGURATION FOR LOCAL MOUNTED PRESSURE SWITCHES AND INDICATORS.

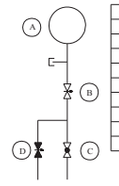

COMPONENT-A	B	C	D
1-PI-3471	1CA-1001	1CA-0035	1CA-1003
1-PI-3472	1CA-1004	1CA-0054	1CA-1006
1-PS-3470	1CA-1007	1CA-0034	1CA-1009
1-PI-3474A	1CI-1601	1CI-0048	1CI-1603
1-PI-3475	1CI-1578	1CI-0056	1CI-1580
1-PS-3473	1CI-1587	1CI-0047	1CI-1589

9. DELETED
10. CHECK VALVES 1CI-0005 AND XCI-0005 INTERNALS HAVE BEEN REMOVED AND IT HAS BEEN ABANDONED IN PLACE.
11. PRESSURE SWITCH 1-PS-3473 CONTACTS ARE SPARED (REF FDA-2001-1143).
12. THE GASKET FACES OF DRIP TRAP CP1-CAMEDT-01 WERE REPAIRED PER FDA-2004-002856-01.

FSAR FIGURE 9.3-1

THIS DRAWING CREATED ELECTRONICALLY

DRAWING 2323-M1-0216 REV CP-10
HAS BEEN SPLIT INTO THE FOLLOWING SHEETS:
M1-0216
M1-0216-B

DRAWING 2323-M1-0216 REV CP-9
HAS BEEN SPLIT INTO THE FOLLOWING SHEETS:
M1-0216
M1-0216-A

CLASS II

TXU POWER
CPSES
GLEN ROSE, TEXAS

FLOW DIAGRAM
COMPRESSED AIR SYSTEM

DWG. NO.	SH. NO.	REV.
M1-0216	-	CP-45

FINAL PRINT

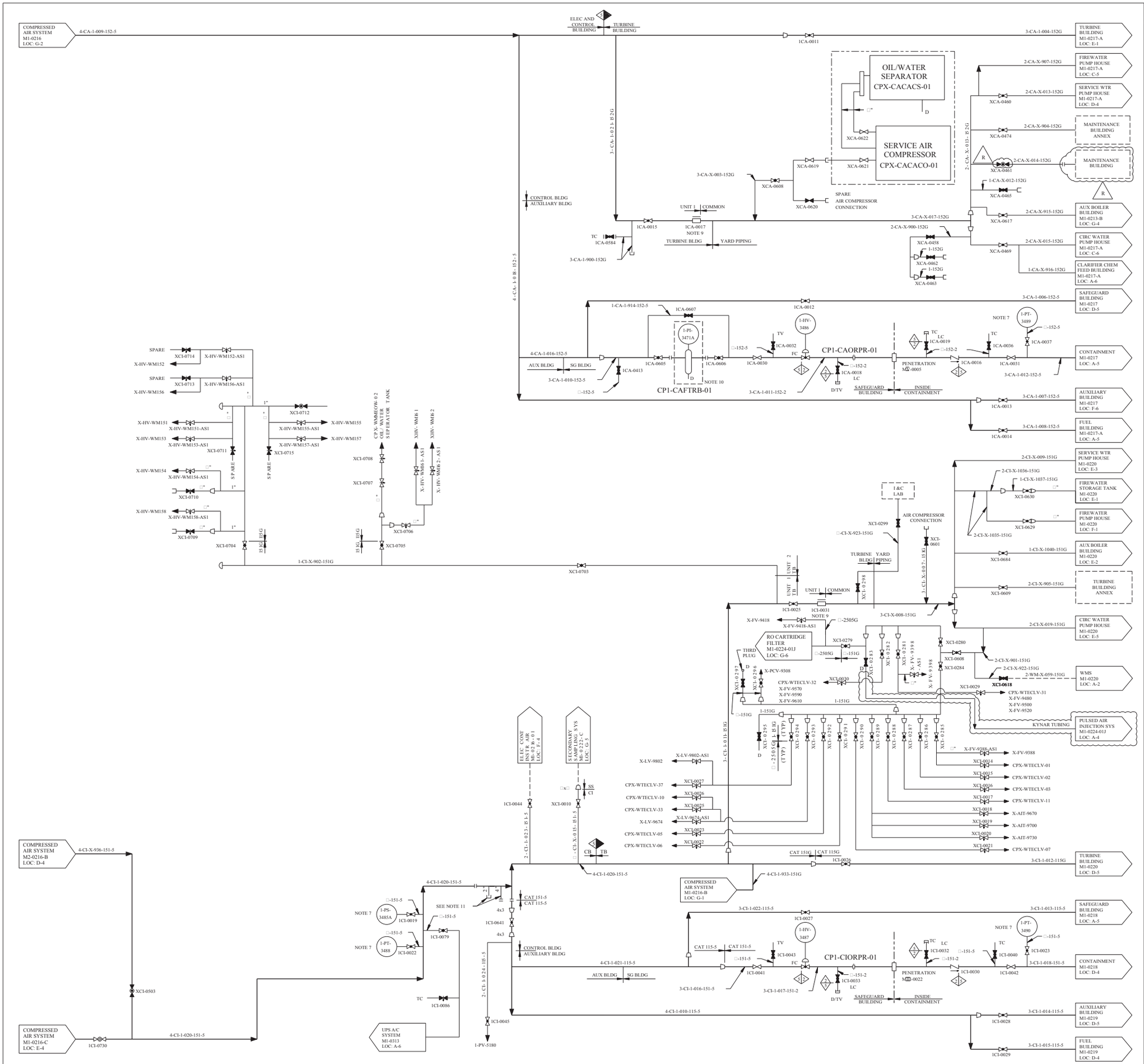

REV	DWN	CHKD	APVD	REMARKS
CP-41	JRMC 10-01-2011	TES 10-01-2011		THIS DRAWING REVISED TO INCORPORATE DESIGN CHANGE FDA 2011-000154-01-00 PER SK-0001-11-000154-01-00.

NOTES:

1. FOR MECHANICAL SYMBOLS AND NOTES SEE DRAWING M1-0200.
2. DELETED
3. ALL DRAINS ARE □" UNLESS OTHERWISE NOTED.
4. UNLESS OTHERWISE NOTED, ALL DRAINS TO BE COLLECTED BY LOCAL FLOOR DRAIN SYSTEM.
5. INSTRUMENT AIR SHALL NOT BE USED FOR BREATHING AIR WITHOUT APPROPRIATE IN-LINE CHEMICAL ABSORBERS AND PARTICULATE FILTRATION. TOXIC VAPORS, FUMES AND PARTICULATES MAY BE PRESENT. REF OSHA 1910.134(d).
6. DRAIN VALVE WITH INTEGRAL PILOT OPERATED SOLENOID VALVE AND SOLID STATE TIMER.
7. TYPICAL CONFIGURATION FOR LOCAL MOUNTED PRESSURE SWITCHES/INDICATORS.

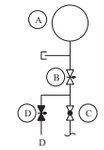

INSTRUMENT	VALVES		
A	B	C	D
1-PS-3485A	1CI-1608	1CI-0019	1CI-1609
1-PT-3488	1CI-1610	1CI-0022	1CI-1611
1-PT-3490	1CI-1612	1CI-1614	1CI-1615
1-PT-3489	1CA-1020	1CA-0037	1CA-1021

8. DELETED
9. REMOVE CHECK VALVE INTERNALS, ABANDON VALVE BODY 1CA-0017 AND 1CI-0031 IN PLACE.
10. VAN AIR FILTER F100-750.
11. HOT TAP LOCATION FOR A VENDOR SUPPLIED 4" TYPE II SHORTSTOPP WELDING FITTING WITH INTERNAL PLUG WITH A BLIND FLANGE AND A 2" TOR NIPPLE SCARFED INSTALLED PER FDA 2001-000158-10, NOT AVAILABLE FOR OTHER USES.

FSAR FIGURE 9.3-1

THIS DRAWING CREATED ELECTRONICALLY

DRAWING 2323-M1-0216 REV CP-9
HAS BEEN SPLIT INTO THE FOLLOWING SHEETS:
M1-0216
M1-0216-A

DRAWING M1-0216-A REV CP-27
HAS BEEN SPLIT INTO THE FOLLOWING SHEETS:
M1-0216-A
M1-0216-C

CLASS I
(NUCLEAR SAFETY-RELATED)
SAFETY CLASS 1 — SEISMIC CATEGORY I
SAFETY CLASS 2 — CLASS 1E
SAFETY CLASS 3 — ASSOCIATED CIRCUITS

LUMINANT
CPNPP
GLEN ROSE, TEXAS

FLOW DIAGRAM
COMPRESSED AIR SYSTEM

DWG. NO. M1-0216 | SH. NO. A | REV. CP-41

$$$$$$$$ DATE$$$$$$$ REF CKD CP-33 10/26/97

me103750.dgn M1-0216-A

< FINAL PRINT >

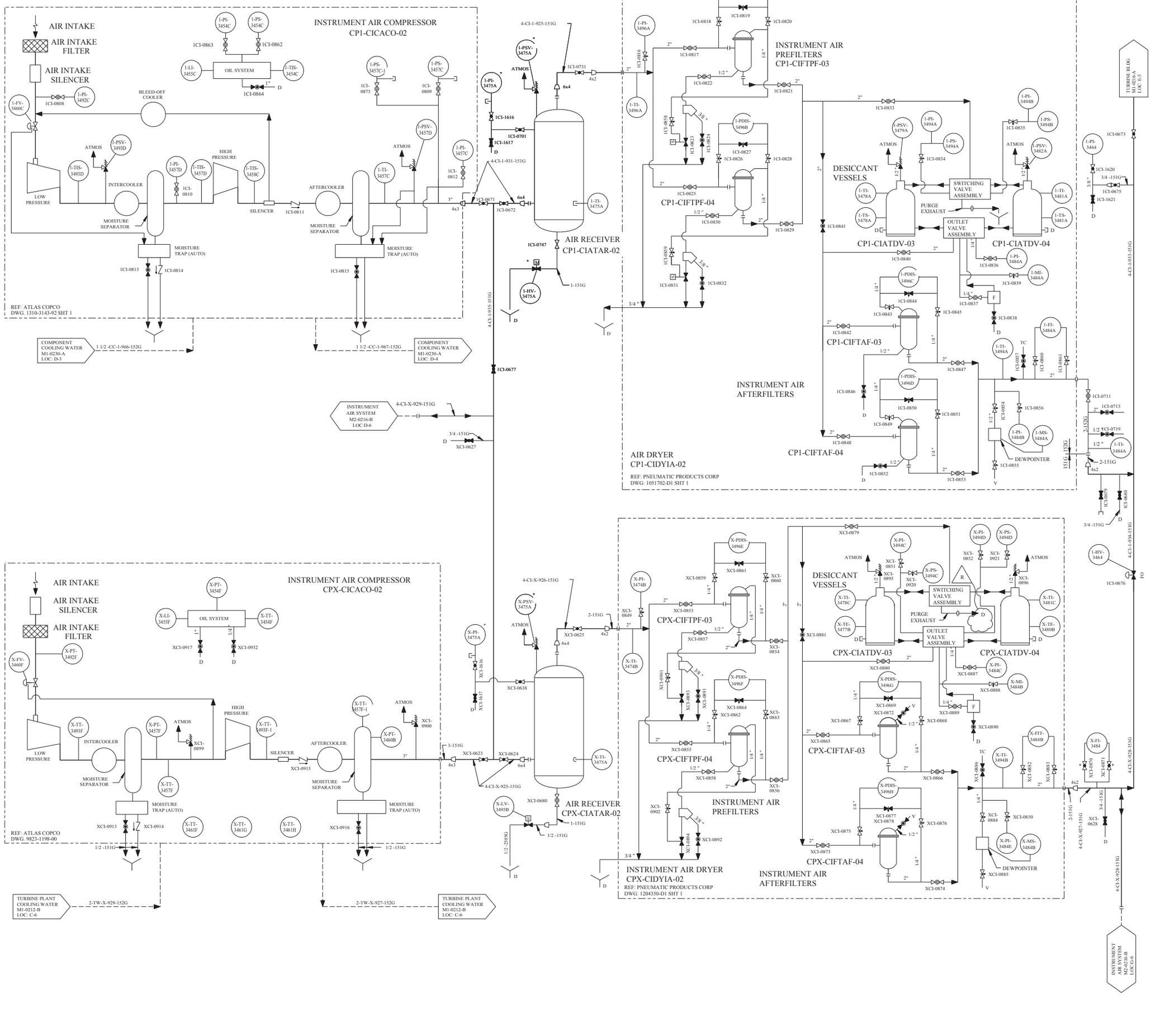

REV	DWN	CHK	APVD	REMARKS
CP-21	JRMC 07-26-2006	SM 07-27-2006		THIS DRAWING REVISED TO INCORPORATE DESIGN CHANGE FDA 2005-003409-01-00 PER SK-0002-05-003409-01-00.

NOTES:

1. FOR MECHANICAL SYMBOLS AND NOTES SEE M1-0200.
2. * SUPPLIED BY VENDOR.
3. ALL DRAINS ARE 3/4 " UNLESS OTHERWISE NOTED.
4. DELETED
5. DELETED
6. DELETED
7. UNLESS OTHERWISE NOTED, ALL DRAINS TO BE COLLECTED BY LOCAL FLOOR DRAIN SYSTEM.
8. INSTRUMENT AIR SHALL NOT BE USED FOR BREATHING AIR WITHOUT APPROPRIATE IN LINE CHEMICAL ABSORBERS AND PARTICULATE FILTRATION. TOXIC VAPORS, FUMES AND PARTICULATES MAY BE PRESENT. REF OSHA 1910.134 (d).
9. PALLMATIC II DRAIN VALVE WITH INTEGRAL PILOT OPERATED SOLENOID VALVE AND SOLID STATE TIMER.
10. DRAIN LINES MAY BE 151-5 OR SS TUBING.

FSAR FIGURE 9.3-1

THIS DRAWING CREATED ELECTRONICALLY

DRAWING 2323-M1-0216 REV CP-10
HAS BEEN SPLIT INTO THE FOLLOWING SHEETS:
M1-0216
M1-0216-B

NON–SAFETY

LUMINANT
CPSES
GLEN ROSE, TEXAS

FLOW DIAGRAM
COMPRESSED AIR SYSTEM

DWG. NO. M1-0216 | SH. NO. B | REV. CP-21

FINAL PRINT

me814700.dgn M1-0216-B

REF CKD CP-13 5/1/98

REV	DWN	CHKD	APVD	REMARKS
CP-11	JRMC 08-04 2009	SM 08-05 2009		THIS DRAWING REVISED TO INCORPORATE DESIGN CHANGE FDA 2009-002126-01-00 PER SK-0001-09-002126-01-00.

NOTES:

1. FOR MECHANICAL SYMBOLS AND NOTES SEE DRAWING M1-0200.
2. UNLESS OTHERWISE NOTED, ALL DRAINS TO BE COLLECTED BY LOCAL FLOOR DRAIN SYSTEM.

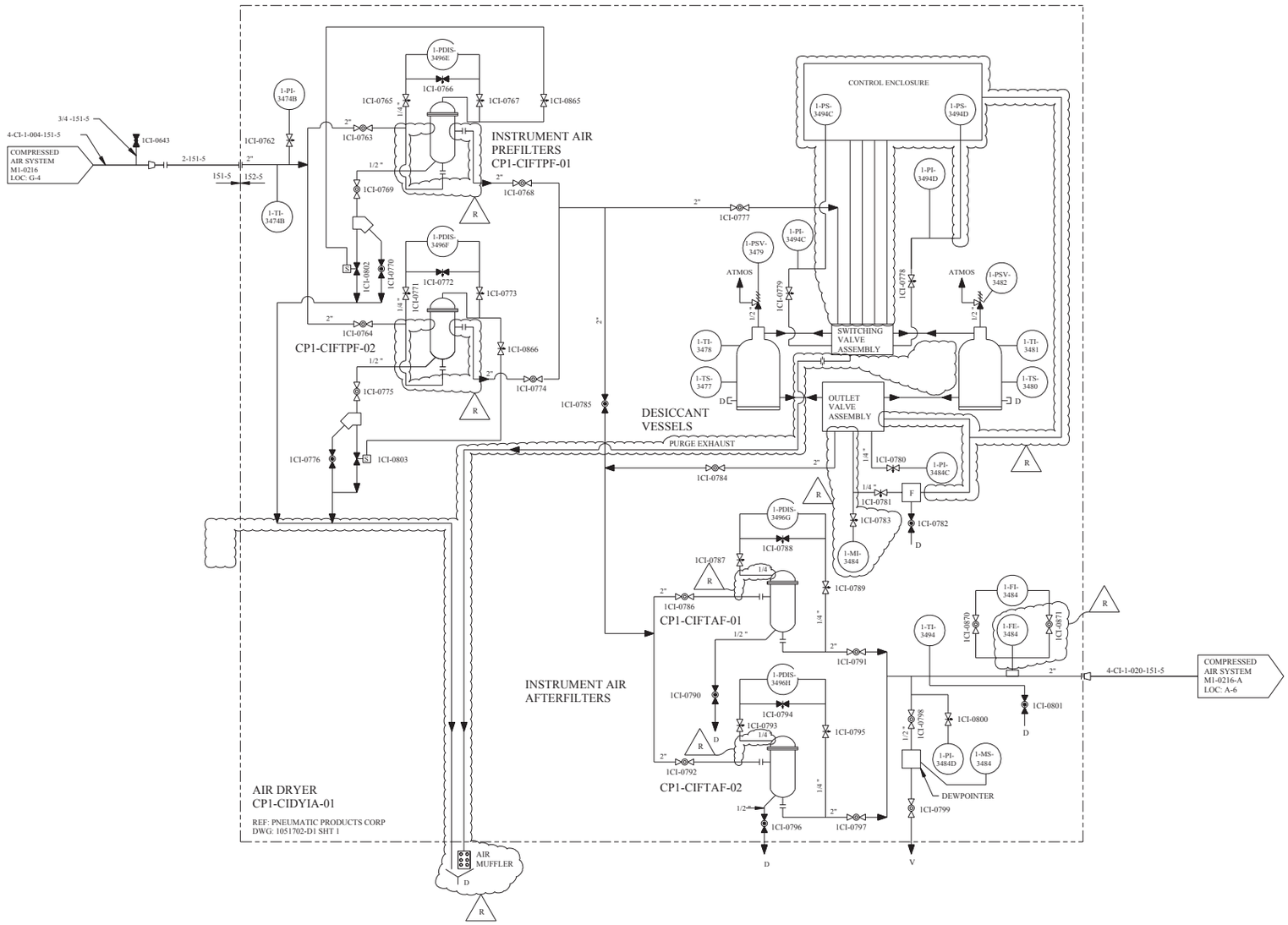

FSAR FIGURE 9.3-1

THIS DRAWING CREATED ELECTRONICALLY

CLASS II

LUMINANT
CPNPP
GLEN ROSE, TEXAS

FLOW DIAGRAM
COMPRESSED AIR SYSTEM

DWG. NO.	SH. NO.	REV.
M1-0216	C	CP-11

REF CKD 5-21-98 CP-6

$$$$$$$DATE$$$$$$

me936200.dgn M1-0216-C

< FINAL PRINT >

REV	DWN	CHKD	APVD	REMARKS
CP-28	SM 05-28-2014			THIS DRAWING REVISED TO INCORPORATE AN EDITORIAL CHANGE AS NOTED PER AI-CR-2014-008461-1.

NOTES:

1. FOR MECHANICAL SYMBOLS AND NOTES SEE DRAWING M1-0200.
2. FOR VALVE/CHANNEL IDENTIFICATION SEE DRAWING M1-2200-02.
3. ALL LINES ARE CATEGORY 115G COPPER AND BRONZE PER SPEC MS-44B, EXCEPT AS NOTED.
4. DANGER - INSTRUMENT AIR SHALL NOT BE USED FOR BREATHING AIR WITHOUT APPROPRIATE IN-LINE CHEMICAL ABSORBERS AND PARTICULATE FILTERS. TOXIC VAPORS OR PARTICULATES MAY BE PRESENT.
5. BAS - BREATHING AIR STATION.
6. SEE M1-2120-02 FOR DETAIL.
7. SEE M1-2120-03 FOR INSTRUMENT DETAIL.
8. PIPE CAPS ADDED TO ISOLATION VALVES TO MITIGATE UNFILTERED AIR INLEAKAGE INTO ROOMS 150 AND 150A PER FDA 1999-002168-01.

FSAR FIGURE 9.3.1

CP-28

THIS DRAWING CREATED ELECTRONICALLY

CLASS I
(NUCLEAR SAFETY-RELATED)
SAFETY CLASS 1 — SEISMIC CATEGORY I
SAFETY CLASS 2 — CLASS 1E
SAFETY CLASS 3 — ASSOCIATED CIRCUITS

LUMINANT
CPNPP
GLEN ROSE, TEXAS

FLOW DIAGRAM
INSTRUMENT AIR SUPPLY
ELECTRICAL AND CONTROL

DWG. NO.	SH. NO.	REV.
M1-0216	01	CP-28

FINAL PRINT

REF CKD CP-23 2/24/98

me573600.dgn M1-0216-01

REV	DWN	CHKD	APVD	REMARKS
CP-21	OLK 06-02-2004	MM 07-08-2004		THIS DRAWING REVISED TO INCORPORATE DESIGN CHANGE FDA 2001-000158-08-00 PER SK-0001-01-000158-08-00.

NOTES:

1. FOR MECHANICAL SYMBOLS AND NOTES SEE DWG M1-0200.
2. * SUPPLIED BY VENDOR.
3. ALL DRAINS ARE 3/4 " UNLESS OTHERWISE NOTED.
4. FLANGED CONNECTION WITH BLIND FLANGE TO BE INSTALLED WITH UNIT 1 CONSTRUCTION.
5. DELETED
6. DELETED
7. UNLESS OTHERWISE NOTED ALL DRAINS TO BE COLLECTED BY LOCAL FLOOR DRAIN SYSTEM.
8. INSTRUMENT AIR SHALL NOT BE USED FOR BREATHING AIR WITHOUT APPROPRIATE INLINE CHEMICAL ABSORBERS AND PARTICULATE FILTRATION. TOXIC VAPORS, FUMES AND PARTICULATES MAY BE PRESENT. "REF OSHA 1910.134(d)."
9. CHECK VALVE 2CI-0005 INTERNALS HAVE BEEN REMOVED AND THE VALVE BODY HAS BEEN ABANDONED IN PLACE.
10. DRAIN LINES MAY BE 151-5 OR SS TUBING.
11. PRESSURE SWITCH 2-PS-3473 CONTACTS ARE SPARED (REF FDA-2001-1143).

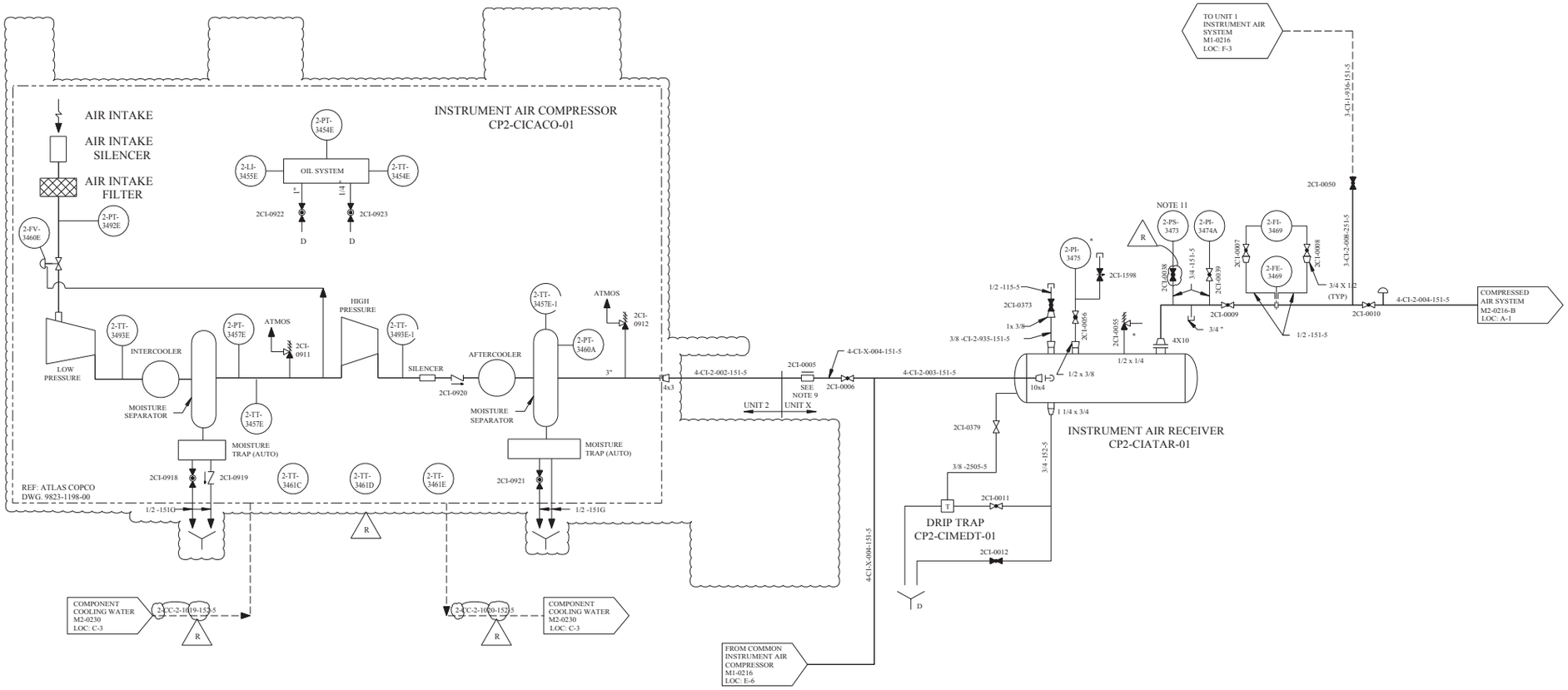

FSAR FIGURE 9.3-1

THIS DRAWING CREATED ELECTRONICALLY

DRAWING 2323-M2-0216 REV CP-2
HAS BEEN SPLIT INTO THE FOLLOWING SHEETS:

M2-0216
M2-0216-A
M2-0216-B

CLASS II

LUMINANT
CPSES
GLEN ROSE, TEXAS

FLOW DIAGRAM
COMPRESSED AIR SYSTEM

DWG. NO.	SH. NO.	REV.
M2-0216	-	CP-21

REF CKD 5-20-98 CP-16

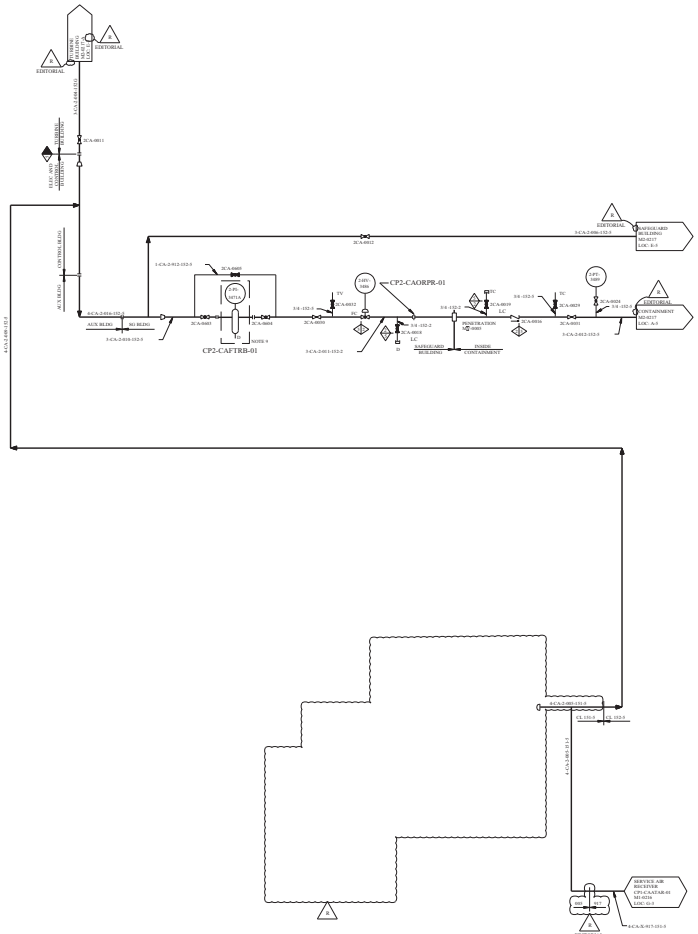
EDITORIAL
SEISMIC SELF-CLOSING CHECK VALVE
3-CA-3-600-152-3
3CA-0011
EXIT FROM AUX BLDG
ENTERING AUX BLDG
AUX BLDG
SG BLDG
3-CA-2-016-152-3
1-CA-2-912-152-3
3CA-0005
3-CA-2-006-152-3
3-CA-2-012-152-3
3-CA-2-011-152-2
CP2-CAORPR-01
CP2-CAFTRB-01
3CA-0004
3CA-0012
3CA-0019
3CA-0016
3CA-0021
3CA-0023
3CA-0029
3CA-0031
3CA-0033
3CA-0035
3CA-0037
3CA-0039
3CA-0041
3CA-0043
3CA-0045
3CA-0047
3CA-0049
3CA-0051
3CA-0053
3CA-0055
3CA-0057
3CA-0059
3CA-0061
3CA-0063
3CA-0065
3CA-0067
3CA-0069
3CA-0071
3CA-0073
3CA-0075
3CA-0077
3CA-0079
3CA-0081
3CA-0083
3CA-0085
3CA-0087
3CA-0089
3CA-0091
3CA-0093
3CA-0095
3CA-0097
3CA-0099
3CA-0101
3CA-0103
3CA-0105
3CA-0107

REV	DWN	CHK	APVD	REMARKS
CP-20	JRSMC 04-28-2008		DJC 04-28-2008	THIS DRAWING REVISED TO INCORPORATE DESIGN CHANGE FDA 2005-004851-04-00 PER SK-0002-05-004851-04-00.

NOTES:
1. FOR MECHANICAL SYMBOLS AND NOTES SEE DWG M1-0200.
2. * SUPPLIED BY VENDOR.
3. ALL DRAINS ARE □" UNLESS OTHERWISE NOTED.
4. DELETED
5. INSTRUMENTS ARE SUPPLIED BY INGERSOLL RAND AND ARE MOUNTED ON THE COMPRESSOR.
6. FIELD INSTALLED CONTROL AIR LINES FOR OPERATION OF THE FREE AIR UNLOADERS ON THE UNIT 2 COMMON INSTRUMENT AIR COMPRESSORS.
7. UNLESS OTHERWISE NOTED ALL DRAINS TO BE COLLECTED BY LOCAL FLOOR DRAIN SYSTEM.
8. INSTRUMENT AIR SHALL NOT BE USED FOR BREATHING AIR WITHOUT APPROPRIATE INLINE CHEMICAL ABSORBERS AND PARTICULATE FILTRATION. TOXIC VAPORS, FUMES AND PARTICULATES MAY BE PRESENT. "REF OSHA 1910.134(d)."
9. DRAIN TRAP TIMER.
10. DELETED

FSAR FIGURE 9.3-1

THIS DRAWING CREATED ELECTRONICALLY

DRAWING 2323-M2-0216 REV CP-1
HAS BEEN SPLIT INTO THE FOLLOWING SHEETS:
M2-0216
M2-0216-A
M2-0216-B

CLASS I
(NUCLEAR SAFETY-RELATED)
SAFETY CLASS 1 SEISMIC CATEGORY I
SAFETY CLASS 2 CLASS 1E
SAFETY CLASS 3 ASSOCIATED CIRCUITS

LUMINANT
CPNPP
GLEN ROSE, TEXAS

FLOW DIAGRAM
INSTRUMENT AIR SYSTEM

DWG. NO. M2-0216 | SH. NO. B | REV. CP-20

FINAL PRINT

REF CHKD 5/3Y2001

me873600.dgn A M2-0216-B

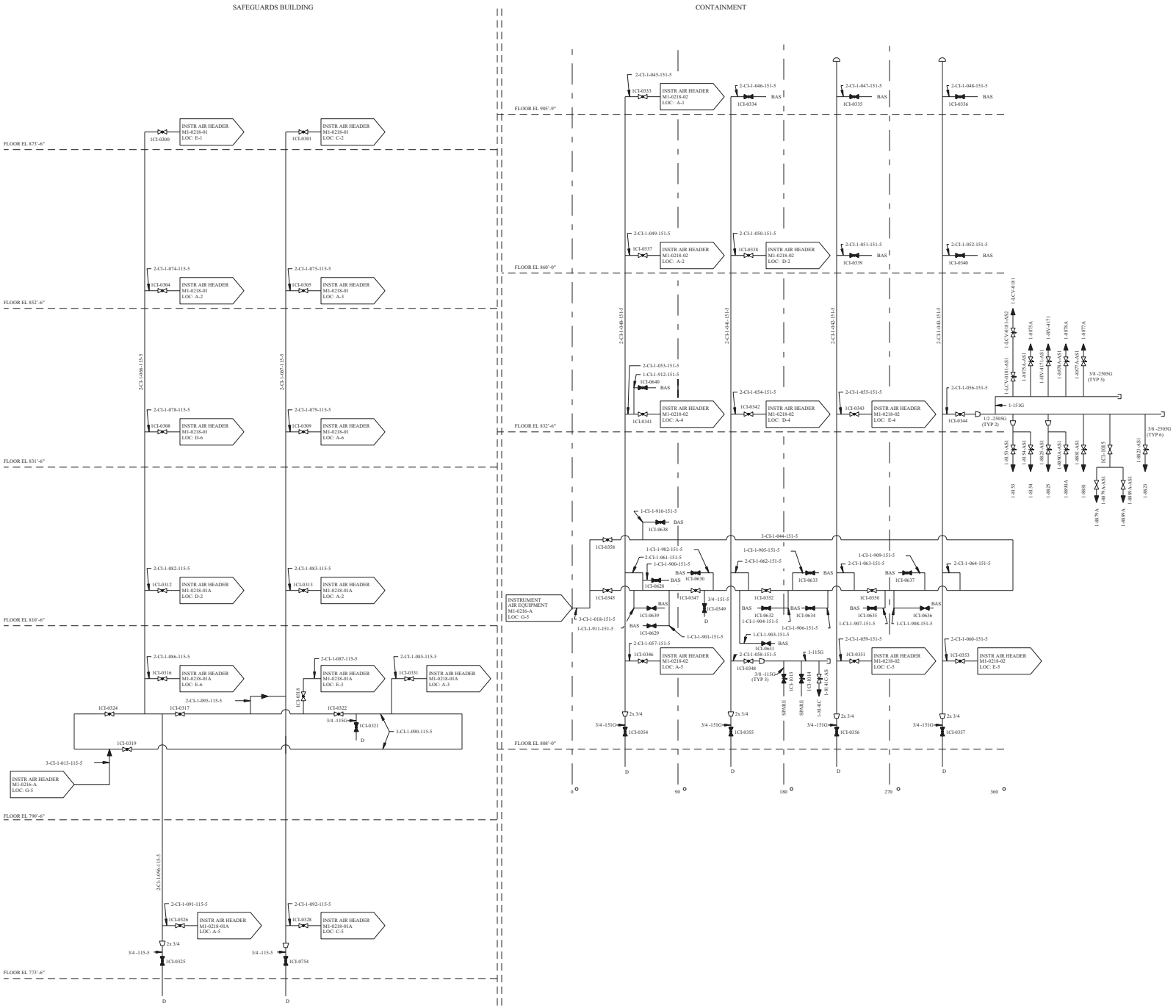

REV.	DWN	CHKD	APVD	REMARKS
CP-14	AGTD 05/23/96			THIS DRAWING REVISED TO ADD THE FSAR FIGURE NUMBER AS AN EDITORIAL CHANGE.

NOTES

1. FOR MECHANICAL SYMBOLS AND NOTES SEE DRAWING M1-0200.
2. UNLESS OTHERWISE NOTED, DRAINS COLLECTED BY LOCAL DRAIN SYSTEM.
3. TYPICAL INSTRUMENT AIR SUPPLIED TO INSTRUMENT AIR ACTUATED DIAPHRAGM WITH VALVE POSITIONER.



4. DANGER - INSTRUMENT AIR SHALL NOT BE USED FOR BREATHING AIR WITHOUT APPROPRIATE IN-LINE CHEMICAL ABSORBERS AND PARTICULATE FILTERS. TOXIC VAPORS OR PARTICULATES MAY BE PRESENT.
5. FOR VALVE CHANNEL NUMBER IDENTIFICATION SEE DRAWING M1-2200-02.
6. VALVES DESIGNATED BAS WILL HAVE A HANSEN FITTING FOR CONNECTION TO A USER APPARATUS.

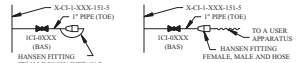

7. HANSEN FITTINGS INSIDE CONTAINMENT ARE TO BE STAINLESS STEEL.

FSAR FIGURE 9.3-1

CP 14

THIS DRAWING CREATED ELECTRONICALLY

CLASS II

TXU ELECTRIC
CPSES
GLEN ROSE, TEXAS

FLOW DIAGRAM
INSTRUMENT AIR

DWG. NO.	SH. NO.	REV.
M1-0218	-	CP-14

vs00007p.dgn

$$$$SSSD$TA ITESSSSS

REV	DWN	CHKD	APVD	REMARKS
CP-20	SM 04-14-2007	DH 04-14-2007		THIS DRAWING REVISED TO INCORPORATE DESIGN CHANGE FDA-2005-000224-06-04 PER SK-0245-05-000224-06-00.

NOTES:

1. SEE MECHANICAL DRAWING M1-0200 FOR SYMBOLS AND NOTES.
2. FOR VALVE/CHANNEL NUMBER IDENTIFICATION SEE DRAWING M1-2200-02.
3. ALL LINES ARE 115G EXCEPT AS NOTED.
4. ALL LINES 3/4 " AND GREATER ARE COPPER ASTM B88, SWEAT CONNECTIONS, EXCEPT AS NOTED.
5. ALL LINES 1/2 " AND SMALLER ARE COPPER ASTM B68 OR B75 SWAGELOK COMPRESSION FITTINGS EXCEPT AS NOTED.
6. SEE M1-2120-01 FOR INSTRUMENT DETAIL.
7. SEE M1-2120-03 FOR INSTRUMENT DETAIL.
8. BAS - BREATHING AIR STATION.
9. DANGER - INSTRUMENT AIR SHALL NOT BE USED FOR BREATHING AIR WITHOUT APPROPRIATE IN-LINE CHEMICAL ABSORBERS AND PARTICULATE FILTERS. TOXIC VAPORS OR PARTICULATES MAY BE PRESENT.
10. HANSEN FITTINGS INSIDE CONTAINMENT ARE TO BE STAINLESS STEEL.
11. VALVES DESIGNATED BAS WILL HAVE A HANSEN FITTING FOR CONNECTION TO A USER APPARATUS.

X-CI-1-XXX-151-5 1" PIPE (TOE) — 1CI-0XXX (BAS) HANSEN FITTING FEMALE W/CHAINED CAP

X-CI-1-XXX-151-5 1" PIPE (TOE) — 1CI-0XXX (BAS) HANSEN FITTING FEMALE, MALE AND HOSE — TO A USER APPARATUS

12. THESE VALVES ARE CLOSED WHEN THE TUBE SIDE OF THE LETDOWN REHEAT HEAT EXCHANGER TBX-TRAHLR-01 IS ISOLATED AND DRAINED.

FSAR FIGURE 9.3-1

THIS DRAWING CREATED ELECTRONICALLY

DRAWING TNE-M1-0218-01 REV CP-1
HAS BEEN SPLIT INTO THE FOLLOWING SHEETS:
M1-0218-01
M1-0218-01A

CLASS I
(NUCLEAR SAFETY-RELATED)
SAFETY CLASS 1 — SEISMIC CATEGORY I
SAFETY CLASS 2 — CLASS 1E
SAFETY CLASS 3 — ASSOCIATED CIRCUITS

LUMINANT
CPSES
GLEN ROSE, TEXAS

FLOW DIAGRAM
INSTRUMENT AIR
SAFEGUARDS BUILDING

DWG. NO. M1-0218 | SH. NO. 01 | REV. CP-20

FINAL PRINT

REF CKD CP-15 10/28/97

REV	DWN	CHK	APVD	REMARKS
CP-20	GLK 08-03-2005	MM 08-05-2005		THIS DRAWING REVISED TO INCORPORATE DESIGN CHANGE FDA-2005-000647-01-00 PER SK-0001-05-000647-01-00. EDITORIAL CHANGES AS NOTED.

NOTES:

1. SEE MECHANICAL DRAWING M1-0200 FOR SYMBOLS AND NOTES.
2. FOR VALVE/CHANNEL NO. IDENTIFICATION SEE DRAWING M1-2200-02.
3. ALL LINES ARE 115G EXCEPT AS NOTED.
4. ALL LINES 3/4 " AND GREATER ARE COPPER ASTM B88, SWEAT CONNECTIONS, EXCEPT AS NOTED.
5. ALL LINES 1/2 " AND SMALLER ARE COPPER ASTM B68 OR B75 SWAGELOK COMPRESSION FITTINGS EXCEPT AS NOTED.
6. ACCUMULATORS: SEE M1-2120-01 FOR INSTRUMENT DETAIL.
7. DELETED
8. BAS - BREATHING AIR STATION.
9. DANGER - INSTRUMENT AIR SHALL NOT BE USED FOR BREATHING AIR WITHOUT APPROPRIATE IN-LINE CHEMICAL ABSORBERS AND PARTICULATE FILTERS. TOXIC VAPORS OR PARTICULATES MAY BE PRESENT.
10. VALVE WILL REQUIRE LADDER FOR ACCESS.
11. VALVES DESIGNATED BAS WILL HAVE A HANSEN FITTING FOR CONNECTION TO A USER APPARATUS.

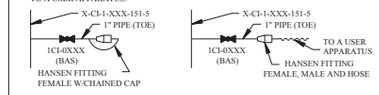

12. HANSEN FITTINGS INSIDE CONTAINMENT ARE TO BE STAINLESS STEEL.

FSAR FIGURE 9.3-1

THIS DRAWING CREATED ELECTRONICALLY

DRAWING TNE-M1-0218-01 REV CP-1
HAS BEEN SPLIT INTO THE FOLLOWING SHEETS:

M1-0218-01
M1-0218-01A

CLASS I
(NUCLEAR SAFETY-RELATED)

SAFETY CLASS 1	SEISMIC CATEGORY I
SAFETY CLASS 2	CLASS 1E
SAFETY CLASS 3	ASSOCIATED CIRCUITS

TXU POWER
CPSES
GLEN ROSE, TEXAS

FLOW DIAGRAM
INSTRUMENT AIR
SAFEGUARDS BUILDING

DWG. NO.	SH. NO.	REV.
M1-0218	01A	CP-20

CPE

REV	DWN	CHK	APVD	REMARKS
CP-17	EES 10-28 2005	GAW 10-30 2005		THIS DRAWING REVISED TO INCORPORATE DESIGN CHANGE FDA-2005-000224-06-00 PER SK-02/46-05-000224-06-00.

NOTES:

1. SEE MECHANICAL DWG M1-0200 FOR SYMBOLS AND NOTES.
2. FOR VALVE/CHANNEL NUMBER IDENTIFICATION SEE DWG M1-2200-02.
3. ALL PIPE 2" & CATEGORY 151G, INSTRUMENT TUBING IS CATEGORY 2505G.
4. VALVES DESIGNATED BAS WILL HAVE A HANSEN FITTING FOR CONNECTION TO A USER APPARATUS.

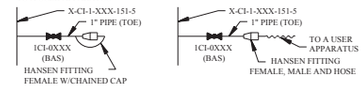

5. HANSEN FITTINGS INSIDE CONTAINMENT ARE TO BE STAINLESS STEEL.

FSAR FIGURE 9.3-1

THIS DRAWING CREATED ELECTRONICALLY

REF CKD 04/02/97

NON–SAFETY

LUMINANT
CPSES
GLEN ROSE, TEXAS

FLOW DIAGRAM
CONTAINMENT INSTRUMENT
AIR SYSTEM

DWG. NO.	SH. NO.	REV.
M1-0218	02	CP-17

me756200.dgn A M1-0218-02 B C D E F G FINAL PRINT H

SAFEGUARDS BUILDING

CONTAINMENT BUILDING

REV.	DWN.	CHKD.	APVD.	REMARKS
CP-8	AUTO 05.15 1996			THIS DRAWING REVISED TO ADD THE FSAR FIGURE NUMBER AS AN EDITORIAL CHANGE.

NOTES:

1. FOR MECHANICAL SYMBOLS AND NOTES SEE DRAWING M1-0200.
2. THE INSTRUMENT AIR BRANCH LINES ARE CONTINUED ON THE M2-2700 SERIES INSTRUMENT AIR PIPING DRAWINGS.
3. UNLESS OTHERWISE NOTED, ALL DRAINS ON THIS DRAWING TO BE COLLECTED BY LOCAL FLOOR DRAIN SYSTEM.
4. INSTRUMENT AIR SHALL NOT BE USED FOR BREATHING AIR WITHOUT APPROPRIATE IN-LINE CHEMICAL ABSORBERS AND PARTICULATE FILTRATION. TOXIC VAPORS, FUMES AND PARTICULATES MAY BE PRESENT. REF. OSHA 1910.134(d).
5. BAS - BREATHING AIR SUPPLY. VALVES DESIGNATED BAS WILL HAVE A HANSEN FITTING FOR CONNECTION TO A USER APPARATUS.
   a) INSTALLED CONDITION
   b) INSTALLED CONDITION
   c) WHEN IN USE

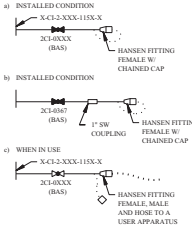

FSAR FIGURE 9.3-1

CP-8

THIS DRAWING CREATED ELECTRONICALLY

CLASS II

TXU ELECTRIC
CPSES
GLEN ROSE, TEXAS

FLOW DIAGRAM
INSTRUMENT AIR

DWG. NO.	SH. NO.	REV.
M2-0218	-	CP-8

vs00007q.dgn

SSSSSSSTA ITESSSSS

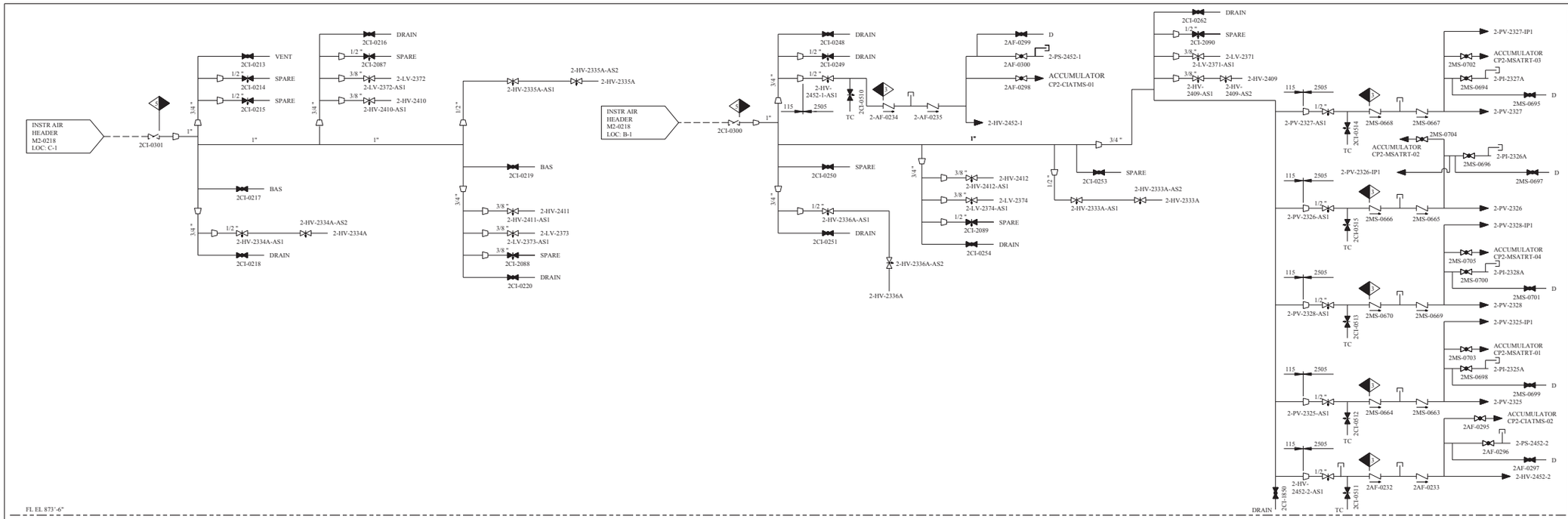

REV	DWN	CHK	APVD	REMARKS
CP-19	JRMC 09-18 2006	SM 09-18 2006		THIS DRAWING REVISED TO INCORPORATE DESIGN CHANGE FDA 2005-003416-01-00 PER SK-0006-05-003416-01-00.

NOTES:

1. TUBING CATEGORY IS 158G COPPER PER MS-626, PIPE IS 115G PER SPEC MS-44B EXCEPT AS NOTED.
2. FOR VALVE/CHANNEL NUMBER IDENTIFICATION SEE M2-2200-02.
3. DRAINS ON THIS DRAWING TO BE COLLECTED BY LOCAL FLOOR DRAINS.
4. FOR MECHANICAL SYMBOLS AND NOTES SEE DRAWING M1-0200.
5. DANGER - INSTRUMENT AIR SHALL NOT BE USED FOR BREATHING AIR WITHOUT APPROPRIATE IN LINE CHEMICAL ABSORBERS AND PARTICULATE FILTRATION. TOXIC VAPORS AND PARTICULATES MAY BE PRESENT.
6. BAS - BREATHING AIR SUPPLY. VALVES DESIGNATED BAS WILL HAVE A HANSEN FITTING FOR CONNECTION TO A USER APPARATUS.
   a) INSTALLED CONDITION

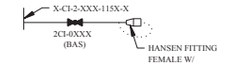

   b) WHEN IN USE

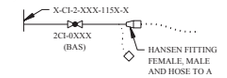

7. NEEDLE VALVES SHOWN ON THIS DRAWING ARE INSTRUMENT AIR ISOLATION VALVES FOR INDICATED MAIN PROCESS CONTROL VALVES ONLY.
8. THESE VALVES ARE CLOSED WHEN THE TUBE SIDE OF THE LETDOWN REHEAT HEAT EXCHANGER TCX-TRAHLR-01 IS ISOLATED AND DRAINED.

FSAR FIGURE 9.3-1

THIS DRAWING CREATED ELECTRONICALLY

REF CKD 12/2/97 CP-15

CLASS I
(NUCLEAR SAFETY-RELATED)
SAFETY CLASS 1 — SEISMIC CATEGORY I
SAFETY CLASS 2 — CLASS 1E
SAFETY CLASS 3 — ASSOCIATED CIRCUITS

TXU POWER
CPSES
GLEN ROSE, TEXAS

FLOW DIAGRAM
INSTRUMENT AIR
SAFEGUARDS BUILDING UNIT 2

DWG. NO.	SH. NO.	REV.
M2-0218	01	CP-19

me730300.dgn A M2-0218-01 FINAL PRINT

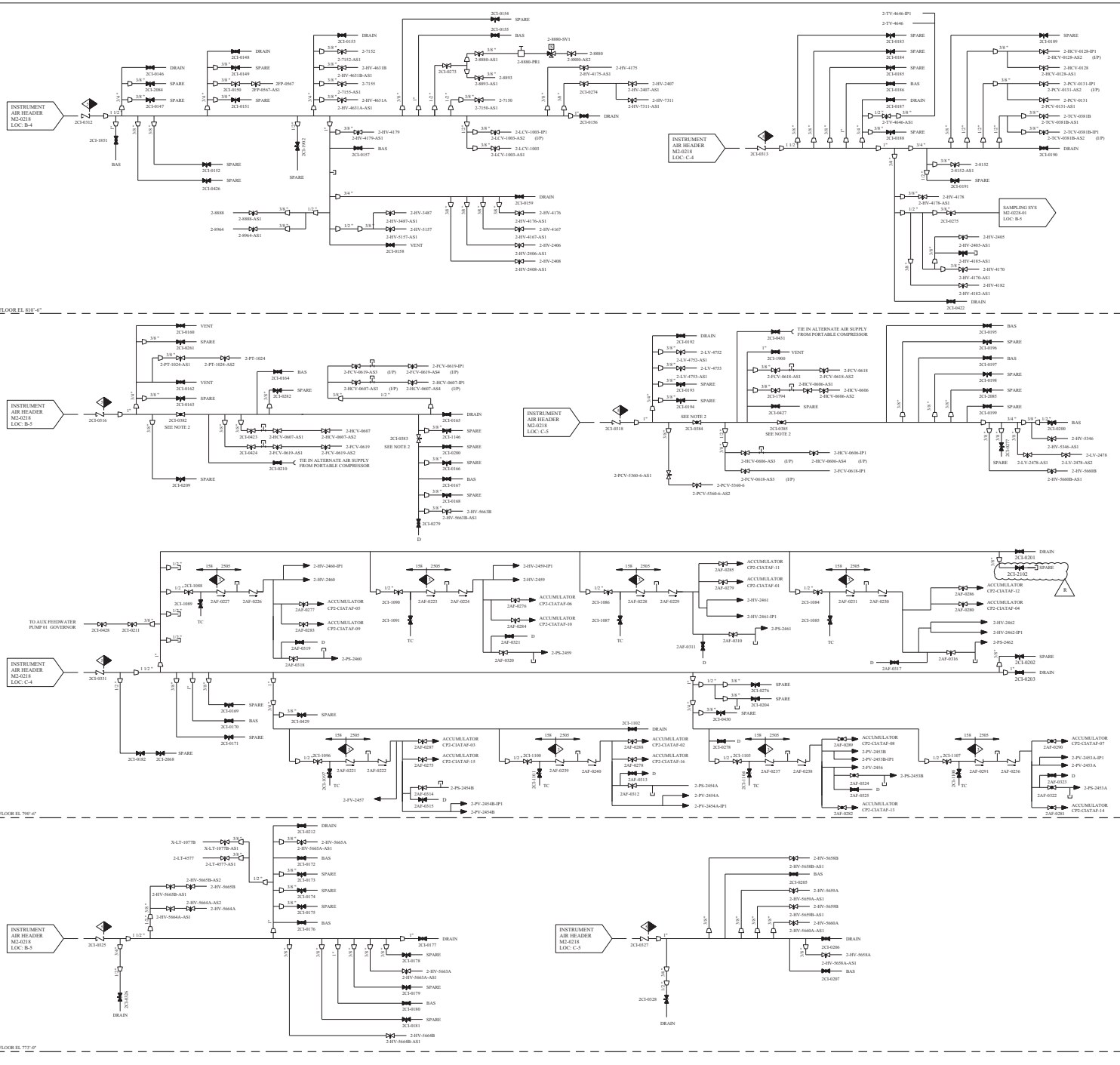

REV	DWN	CHKD	APVD	REMARKS
CP-12	DEMO 06/08 2002	DEMO 06/08 2002		THIS DRAWING REVISED TO INCORPORATE DESIGN CHANGE FDA-2001-002905-01-00 PER SK-0002-01-002905-01-00.

NOTES:

1. FOR GENERAL NOTES SEE M2-0218-01.
2. NEW 1" VALVES (2CI-0382 , 2CI-0383 , 2CI-0384 , AND 2CI-0385) ARE TE 2105 TEMA TYPE VALVES.
3. VALVES DESIGNATED BAS WILL HAVE A HANSEN FITTING FOR CONNECTION TO A USER APPARATUS.
   a) INSTALLED CONDITION

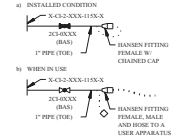

   b) WHEN IN USE

FSAR FIGURE 9.3-1

THIS DRAWING CREATED ELECTRONICALLY

CLASS I

(NUCLEAR SAFETY-RELATED)

SAFETY CLASS 1 SEISMIC CATEGORY I
SAFETY CLASS 2 CLASS IE
SAFETY CLASS 3 ASSOCIATED CIRCUITS

TXU ELECTRIC
CPSES
GLEN ROSE, TEXAS

FLOW DIAGRAM
INSTRUMENT AIR
SAFEGUARDS BUILDING UNIT 2

DWG. NO.	SH. NO.	REV.
M2-0218	02	CP-12

REF CKD 3/14/97 CP-10

$$$$$$DATE$$$$$

me416500.dgn M2-0218-02

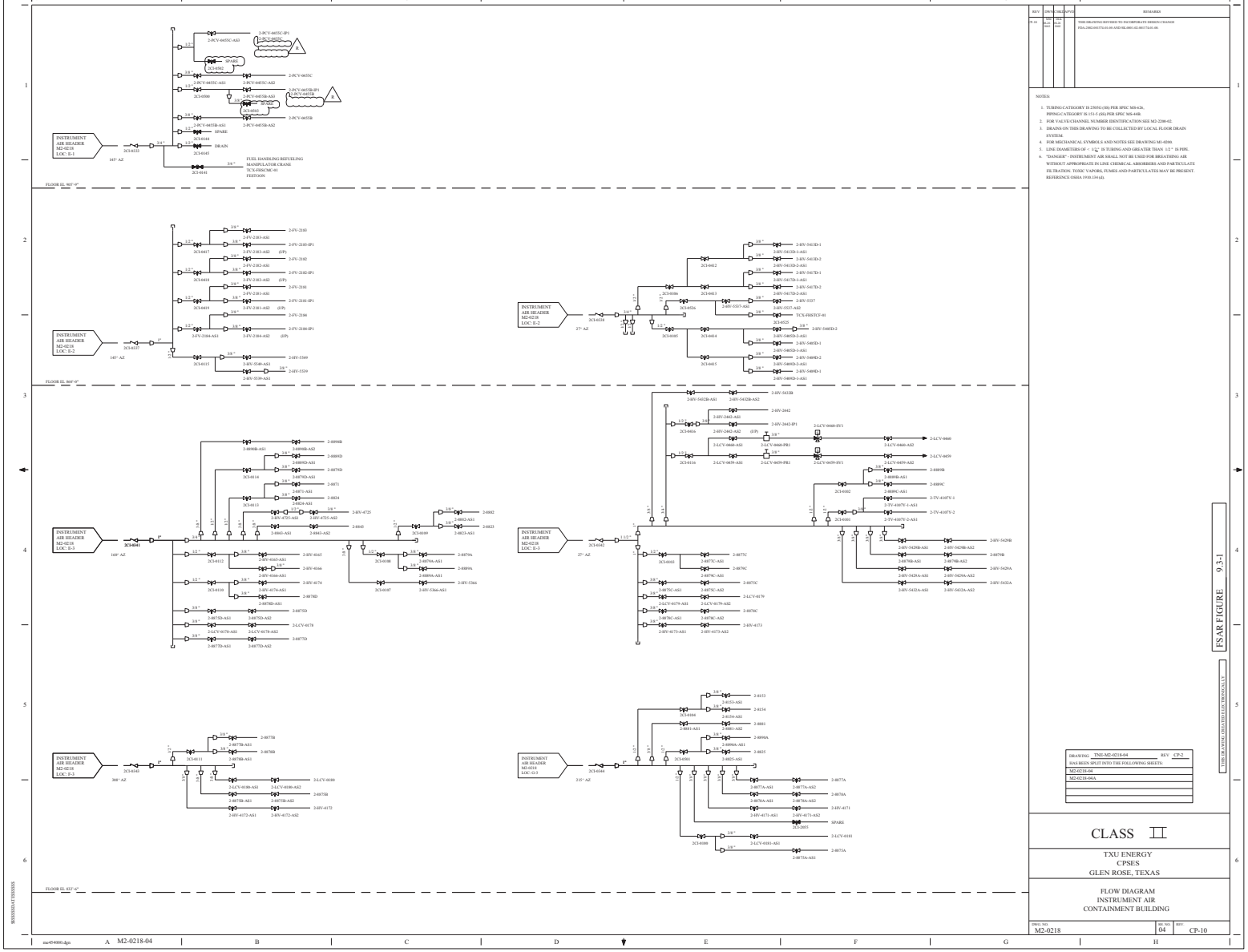

REV	DESCRIPTION	DATE	BY
P-10	THIS DRAWING REVISED TO INCORPORATE DESIGN CHANGE PDA-2002-00175-01-00 AND SIL-0001-02-00175-01-00.	10/02	TCE

NOTES:

1. TUBING CATEGORY IS 2505G (SS) PER SPEC MS-4-26.
   PIPING CATEGORY IS 133-5 (SS) PER SPEC MS-4-8B.
2. FOR VALVE/CHANNEL NUMBER IDENTIFICATION SEE MD-2200-02.
3. DRAINS ON THIS DRAWING TO BE COLLECTED BY LOCAL FLOOR DRAIN SYSTEM.
4. FOR MECHANICAL SYMBOLS AND NOTES SEE DRAWING M1-0200.
5. LINE DIAMETERS OF < 1½" IS TURING AND GREATER THAN 1/2" IS PIPE.
6. "DANGER" - INSTRUMENT AIR SHALL NOT BE USED FOR BREATHING AIR WITHOUT APPROPRIATE IN LINE CHEMICAL ABSORBERS AND PARTICULATE FILTRATION. TOXIC VAPORS, FUMES AND PARTICULATES MAY BE PRESENT. REFERENCE OSHA 1910.134 (d).

FSAR FIGURE 9.3-1

THIS DRAWING GENERATED FROM DGN FILE

DRAWING	TXE-M2-0218-04	REV	CP-2
HAS BEEN SPLIT INTO THE FOLLOWING SHEETS:			
M2-0218-04			
M2-0218-04A			

CLASS II

TXU ENERGY
CPSES
GLEN ROSE, TEXAS

FLOW DIAGRAM
INSTRUMENT AIR
CONTAINMENT BUILDING

DWG. NO.	SH. NO.	REV.
M2-0218	04	CP-10

mw454000.dgn A M2-0218-04

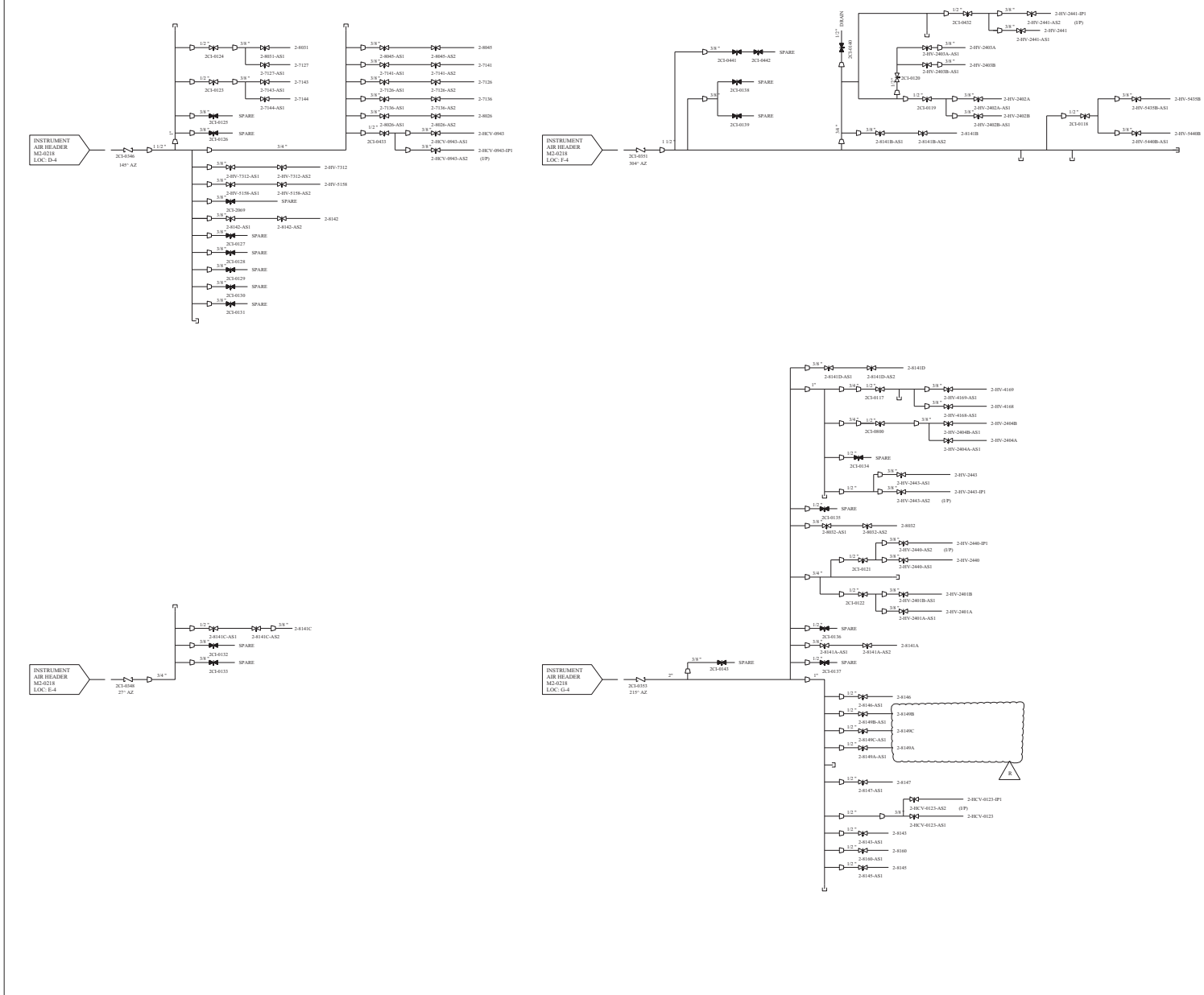

REV	DWN	CHKD	APVD	REMARKS
CP-8	DE 04.18 2002	DE 04.18 2002		THIS DRAWING REVISED TO INCORPORATE DESIGN CHANGE FDA-2002-001154-02-00 PER SK-0001-02-001154-02-00.

NOTES:

1. TUBING CATEGORY IS 250SG (SS) PER SPEC MS-426, PIPING CATEGORY IS 151-5 (SS) PER SPEC MS-448.
2. FOR VALVE/CHANNEL NUMBER IDENTIFICATION SEE M2-2200-02.
3. DRAINS ON THIS DRAWING TO BE COLLECTED BY LOCAL FLOOR DRAIN SYSTEM.
4. FOR MECHANICAL SYMBOLS AND NOTES SEE DRAWING M1-0200.
5. LINE DIAMETERS OF < 1/2" IS TUBING AND GREATER THAN 1/2" IS PIPE.
6. "DANGER" - INSTRUMENT AIR SHALL NOT BE USED FOR BREATHING AIR WITHOUT APPROPRIATE IN LINE CHEMICAL ABSORBERS AND PARTICULATE FILTRATION. TOXIC VAPORS, FUMES AND PARTICULATES MAY BE PRESENT. REFERENCE OSHA 1910.134 (d).
7. DELETED

R

FSAR FIGURE 9.3-1

THIS DRAWING CREATED ELECTRONICALLY

DRAWING TNE-M2-0218-04 REV CP-2
HAS BEEN SPLIT INTO THE FOLLOWING SHEETS:
M2-0218-04
M2-0218-04A

CLASS II

TXU ELECTRIC
CPSES
GLEN ROSE, TEXAS

FLOW DIAGRAM
INSTRUMENT AIR
CONTAINMENT BUILDING

DWG. NO.	SH. NO.	REV.
M2-0218	04A	CP-8

$$$$$$DATE$$$$$

me411100.dgn M2-0218-04A

AUXILIARY BUILDING

FUEL BUILDING

REV	DWN	CHKD	APVD	REMARKS
CP-21	MM 04-23 2014	DLK 04-24 2014		THIS DRAWING REVISED TO INCORPORATE DESIGN CHANGE FDA-2013-000052-01-00 PER SK-0001-13-000052-01-00.

NOTES:

1. FOR MECHANICAL SYMBOLS AND NOTES, SEE DRAWING M1-0200.
2. ALL DRAINS ARE □" UNLESS OTHERWISE NOTED.
3. ENTIRE INSTRUMENT AIR SYSTEM SHALL BE COPPER TUBING UNLESS OTHERWISE NOTED.
4. BAS - BREATHING AIR STATION.
5. DANGER - INSTRUMENT AIR SHALL NOT BE USED FOR BREATHING AIR WITHOUT APPROPRIATE IN-LINE CHEMICAL ABSORBERS AND PARTICULATE FILTERS. TOXIC VAPORS OR PARTICULATES MAY BE PRESENT.
6. FOR VALVE/CHANNEL NUMBER IDENTIFICATION, SEE DRAWING M1-2200-02.
7. VALVES DESIGNATED BAS WILL HAVE A HANSEN FITTING FOR CONNECTION TO A USER APPARATUS.

X-CI-1-XXX-151-5 — 1" PIPE (TOE) — 1CI-0XXX (BAS) — HANSEN FITTING FEMALE W/CHAINED CAP

X-CI-1-XXX-151-5 — 1" PIPE (TOE) — 1CI-0XXX (BAS) — TO A USER APPARATUS — HANSEN FITTING FEMALE, MALE AND HOSE

8. EACH GATE PROVIDED WITH HOSE ASSEMBLY AS SHOWN IN DETAIL A.

DETAIL A

FLEX HOSE ASSEMBLY	LOCATION
CPX-CIFHFB-01 AND -01A CPX-CIFHFB-02 AND -02A CPX-CIFHFB-03 CPX-CIFHFB-04	POOL 1 POOL 2 TRANSFER CANAL WET CASK PIT

9. POOLS 1 AND 2 FLEX HOSE ASSEMBLY AND CAP CAN BE MOVED TO EITHER SEAL. AIR SUPPLY CAN BE EITHER XCI-0611 OR XCI-0612 FOR POOL 1 AND XCI-0616 OR XCI-0617 FOR POOL 2.

DETAIL B

DETAIL C

FSAR FIGURE 9.3-1

THIS DRAWING CREATED ELECTRONICALLY

CLASS I
(NUCLEAR SAFETY-RELATED)
SAFETY CLASS 1, SAFETY CLASS 2, SAFETY CLASS 3 — SEISMIC CATEGORY I, CLASS 1E, ASSOCIATED CIRCUITS

LUMINANT
CPNPP
GLEN ROSE, TEXAS

FLOW DIAGRAM
INSTRUMENT AIR

DWG. NO.	SH. NO.	REV.
M1-0219	-	CP-21

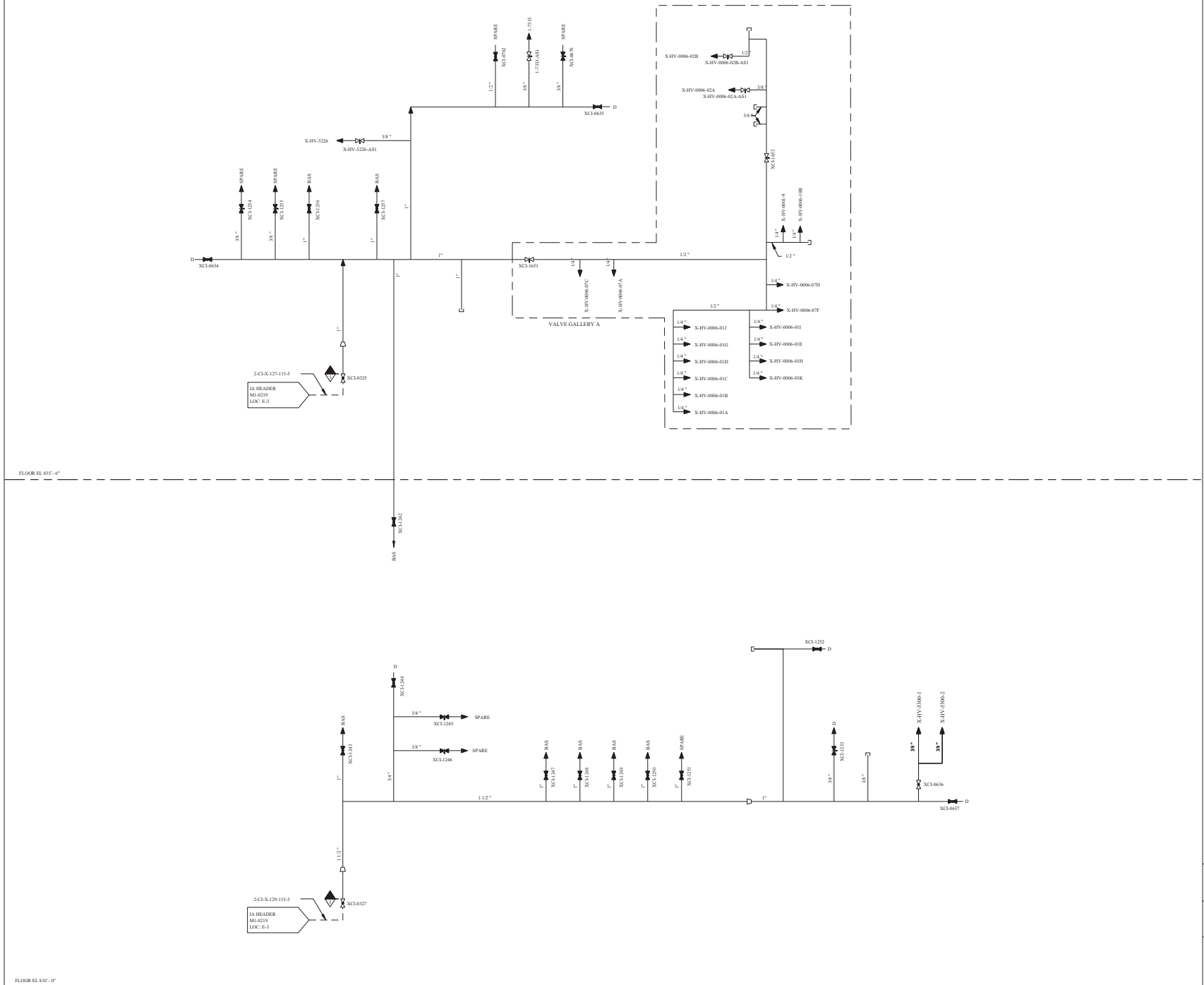

REV	DWN	CHKD	APVD	REMARKS
CP-15	AUTO 05-23 1996			THIS DRAWING REVISED TO ADD THE FSAR FIGURE NUMBER AS AN EDITORIAL CHANGE.

NOTES:

1. SEE MECHANICAL DWG M1-0200 FOR SYMBOLS AND NOTES.
2. BAS - BREATHING AIR STATION.
3. DANGER - INSTRUMENT AIR SHALL NOT BE USED FOR BREATHING AIR WITHOUT APPROPRIATE IN-LINE CHEMICAL ABSORBERS AND PARTICULATE FILTERS. TOXIC VAPORS OR PARTICULATES MAY BE PRESENT.
4. ALL LINES ARE CATEGORY 115G COPPER AND BRONZE PER SPEC MS-44B EXCEPT AS NOTED.
5. FOR VALVE/CHANNEL NUMBER IDENTIFICATION SEE DWG M1-2200-02.
6. VALVES DESIGNATED BAS WILL HAVE A HANSEN FITTING FOR CONNECTION TO A USER APPARATUS.

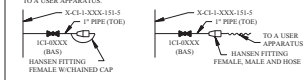

FSAR FIGURE 9.3-1

CP 15

THIS DRAWING CREATED ELECTRONICALLY

NON-SAFETY

TXU ELECTRIC
CPSES
GLEN ROSE, TEXAS

FLOW DIAGRAM
INSTRUMENT AIR SUPPLY
FUEL BUILDING

DWG. NO.	SH. NO.	REV.
M1-0219	01	CP-15

vs00007z.dgn

REV	DWN	CHKD	APVD	REMARKS
CP-20	SM 01-26-2010	BBL 01-27-2010		THIS DRAWING REVISED TO INCORPORATE DESIGN CHANGE FDA-2009-002311-01-00 PER SK-0005-09-002311-01-00.

NOTES:

1. FOR MECHANICAL SYMBOLS AND NOTES SEE DWG M1-0200.
2. FOR VALVE/CHANNEL NUMBER IDENTIFICATION SEE DWG M1-2200-02.
3. ALL LINES ARE CATEGORY 115G, COPPER AND BRONZE PER SPEC MS-44B, EXCEPT AS NOTED.
4. BAS - BREATHING AIR STATION.
5. DANGER - INSTRUMENT AIR SHALL NOT BE USED FOR BREATHING WITHOUT APPROPRIATE IN-LINE CHEMICAL ABSORBERS AND PARTICULATE FILTERS. TOXIC VAPORS OR PARTICULATES MAY BE PRESENT.
6. UNLESS OTHERWISE NOTED, ALL DRAINS TO BE COLLECTED BY LOCAL FLOOR DRAIN SYSTEM.
7. VALVES DESIGNATED BAS WILL HAVE A HANSEN FITTING FOR CONNECTION TO A USER APPARATUS.

X-CI-1-XXX-151-5
1" PIPE (TOE)
1CI-0XXX (BAS)
HANSEN FITTING FEMALE W/CHAINED CAP

X-CI-1-XXX-151-5
1" PIPE (TOE)
1CI-0XXX (BAS)
TO A USER APPARATUS
HANSEN FITTING FEMALE, MALE AND HOSE

FSAR FIGURE 9.3-1

THIS DRAWING CREATED ELECTRONICALLY

DRAWING M1-0219-02 REV 07
HAS BEEN SPLIT INTO THE FOLLOWING SHEETS:
M1-0219-02
M1-0219-02A

NON–SAFETY

LUMINANT
CPNPP
GLEN ROSE, TEXAS

FLOW DIAGRAM
INSTRUMENT AIR SUPPLY
AUXILIARY BUILDING

DWG. NO. M1-0219 | SH. NO. 02 | REV. CP-20

FINAL PRINT

me989800.dgn | M1-0219-02

FLOOR EL 810'-6"

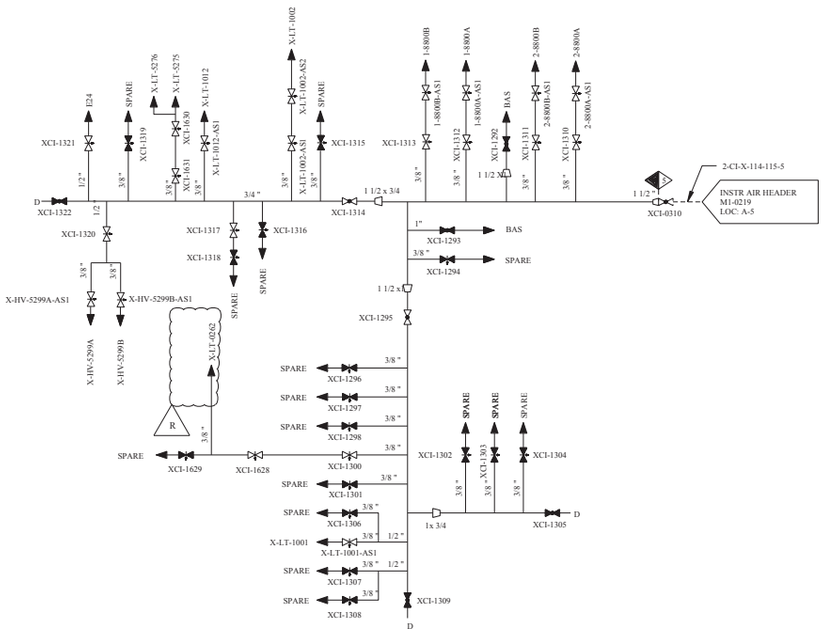

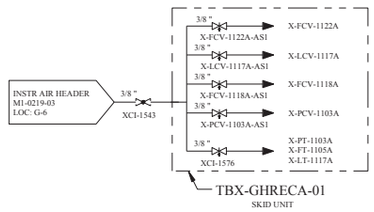

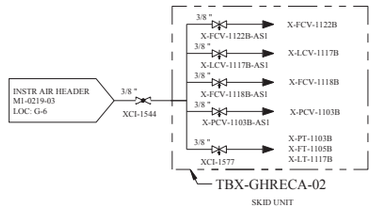

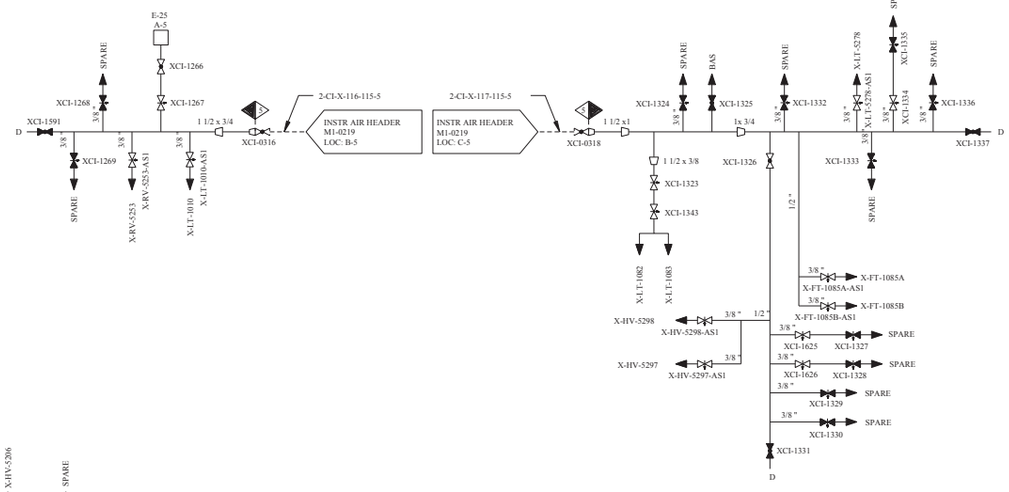

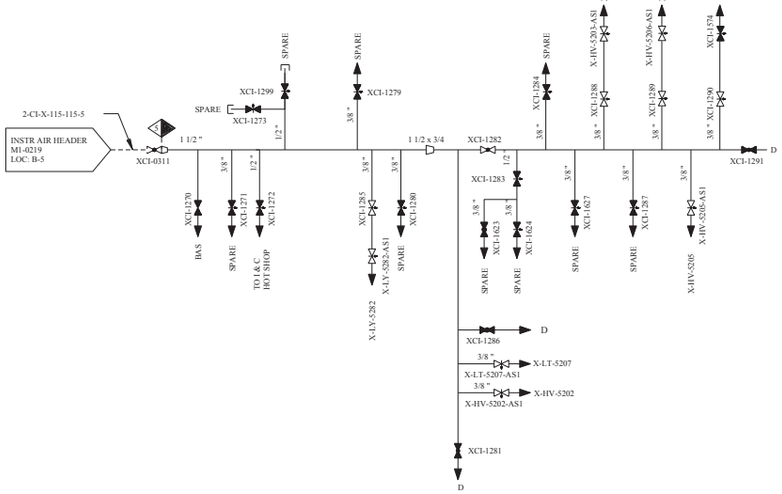

REV	DWN	CHKD	APVD	REMARKS
CP-15	SM 01-26-2010	DJL 01-27-2010		THIS DRAWING REVISED TO INCORPORATE DESIGN CHANGE FDA-2009-002311-01-00 PER SK-0004-09-002311-01-00.

NOTES:

1. FOR MECHANICAL SYMBOLS AND NOTES SEE DWG M1-0200.
2. FOR VALVE/CHANNEL NUMBER IDENTIFICATION SEE DWG M1-2200-02.
3. ALL LINES ARE CATEGORY 115G, COPPER AND BRONZE PER SPEC MS-44B, EXCEPT AS NOTED.
4. BAS - BREATHING AIR STATION.
5. DANGER - INSTRUMENT AIR SHALL NOT BE USED FOR BREATHING WITHOUT APPROPRIATE IN-LINE CHEMICAL ABSORBERS AND PARTICULATE FILTERS. TOXIC VAPORS OR PARTICULATES MAY BE PRESENT.
6. UNLESS OTHERWISE NOTED, ALL DRAINS TO BE COLLECTED BY LOCAL FLOOR DRAIN SYSTEM.
7. VALVES DESIGNATED BAS WILL HAVE A HANSEN FITTING FOR CONNECTION TO A USER APPARATUS.

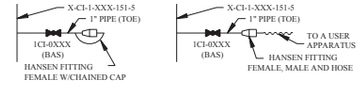

FSAR FIGURE 9.3-1

THIS DRAWING CREATED ELECTRONICALLY

DRAWING M1-0219-02	REV CP-7
HAS BEEN SPLIT INTO THE FOLLOWING SHEETS:	
M1-0219-02	
M1-0219-02A	

NON–SAFETY

LUMINANT
CPNPP
GLEN ROSE, TEXAS

FLOW DIAGRAM
INSTRUMENT AIR SUPPLY
AUXILIARY BUILDING

DWG. NO.	SH. NO.	REV.
M1-0219	02A	CP-15

REF CKD CP-10 7/18/967

REV	DWN	CHK	APVD	REMARKS
CP-25	SM 05-08-2006	JBM 05-08-2006		THIS DRAWING REVISED TO INCORPORATE DESIGN CHANGE FDA-2005-003009-01-00 PER SK-0002-05-003009-01-00.

NOTES:

1. SEE MECHANICAL DRAWING M1-0200 FOR SYMBOLS AND NOTES.
2. FOR VALVE/CHANNEL NUMBER IDENTIFICATION SEE DRAWING M1-2200-02.
3. ALL LINES ARE CATEGORY 115G, COPPER AND BRONZE PER SPEC MS-44B, EXCEPT AS NOTED.
4. BAS - BREATHING AIR STATION.
5. DANGER - INSTRUMENT AIR SHALL NOT BE USED FOR BREATHING WITHOUT APPROPRIATE INLINE CHEMICAL ABSORBERS AND PARTICULATE FILTERS. TOXIC VAPORS OR PARTICULATE MAY BE PRESENT.
6. VALVES DESIGNATED BAS WILL HAVE A HANSEN FITTING FOR CONNECTION TO A USER APPARATUS.

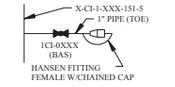

FSAR FIGURE 9.3-1

THIS DRAWING CREATED ELECTRONICALLY

NON–SAFETY

TXU POWER
CPSES
GLEN ROSE, TEXAS

FLOW DIAGRAM
INSTRUMENT AIR SUPPLY
AUXILIARY BUILDING

DWG. NO.	SH. NO.	REV.
M1-0219	03	CP-25

FINAL PRINT

REF CKD CP-20718/97

me679300.dgn A M1-0219-03 B C D E F G H

REV	DWN	CHKD	APVD	REMARKS
CP-15	MHF 12-17 2008	EES 12-17 2008		THIS DRAWING REVISED TO INCORPORATE DESIGN CHANGE FDA-2006-003080-40-00 PER SK-0036-06-003080-40-00.

NOTES:

1. FOR MECHANICAL SYMBOLS AND NOTES SEE DRAWING M1-0200.
2. THE INSTRUMENT AIR BRANCH LINES ARE CONTINUED ON THE M2-2700 SERIES INSTRUMENT AIR PIPING DRAWINGS.
3. ALL DRAINS ON THIS DRAWING TO BE COLLECTED BY LOCAL FLOOR DRAIN SYSTEM.

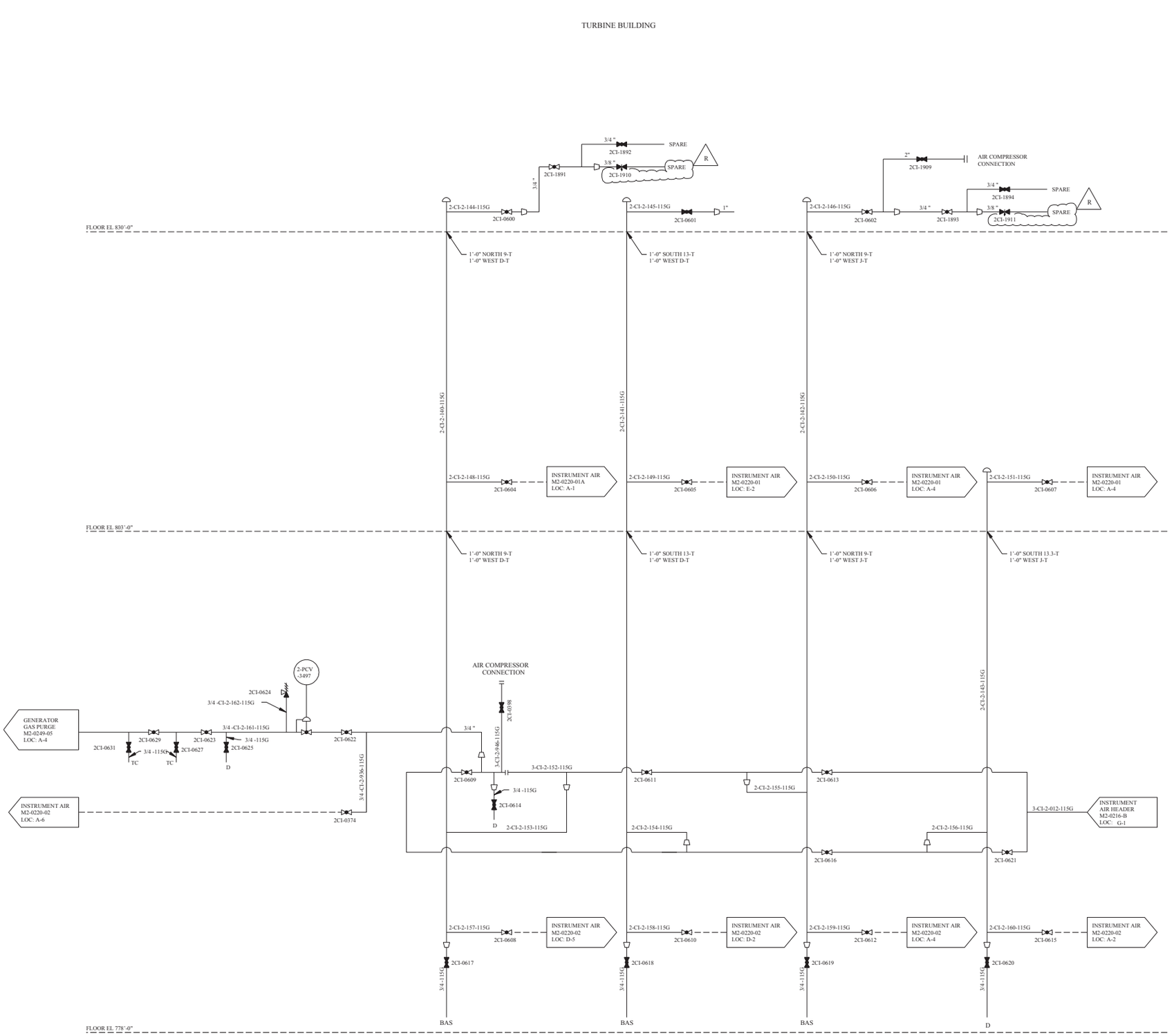

FSAR FIGURE 9.3-1

THIS DRAWING CREATED ELECTRONICALLY

NON–SAFETY

LUMINANT
CPNPP
GLEN ROSE, TEXAS

FLOW DIAGRAM
INSTRUMENT AIR
UNIT 2

DWG. NO.	SH. NO.	REV.
M2-0219	-	CP-15

REF CKD 10/7/97 CP-9

$$$$$$$$DATE$$$$$$

me950700.dgn A M2-0219 B C D E F G < FINAL PRINT > H

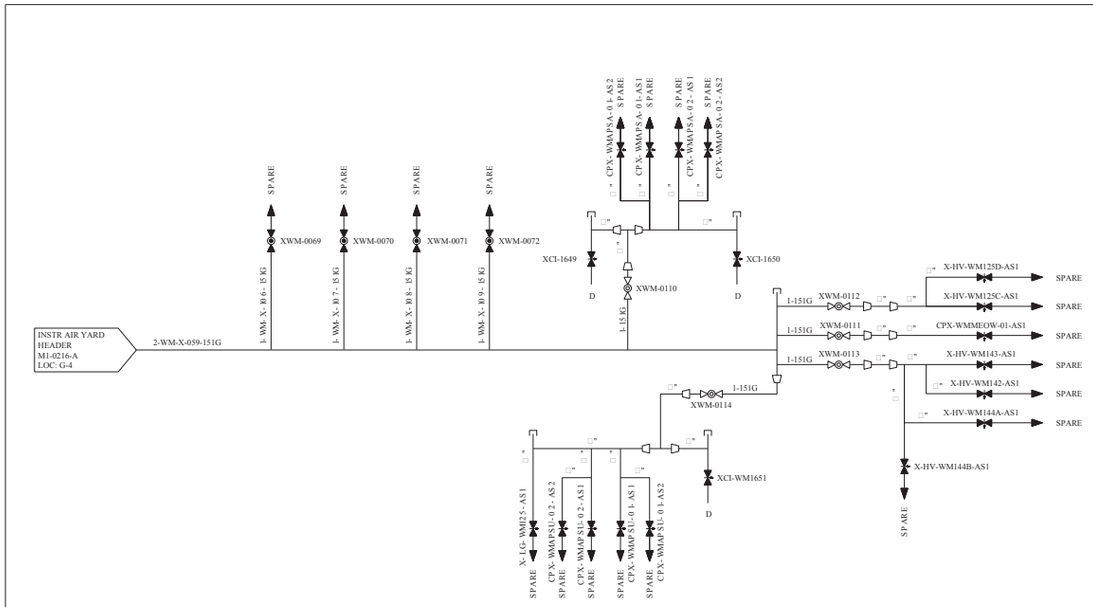

WASTE MANAGEMENT SYSTEM
(ABANDONED IN PLACE)

TURBINE BUILDING

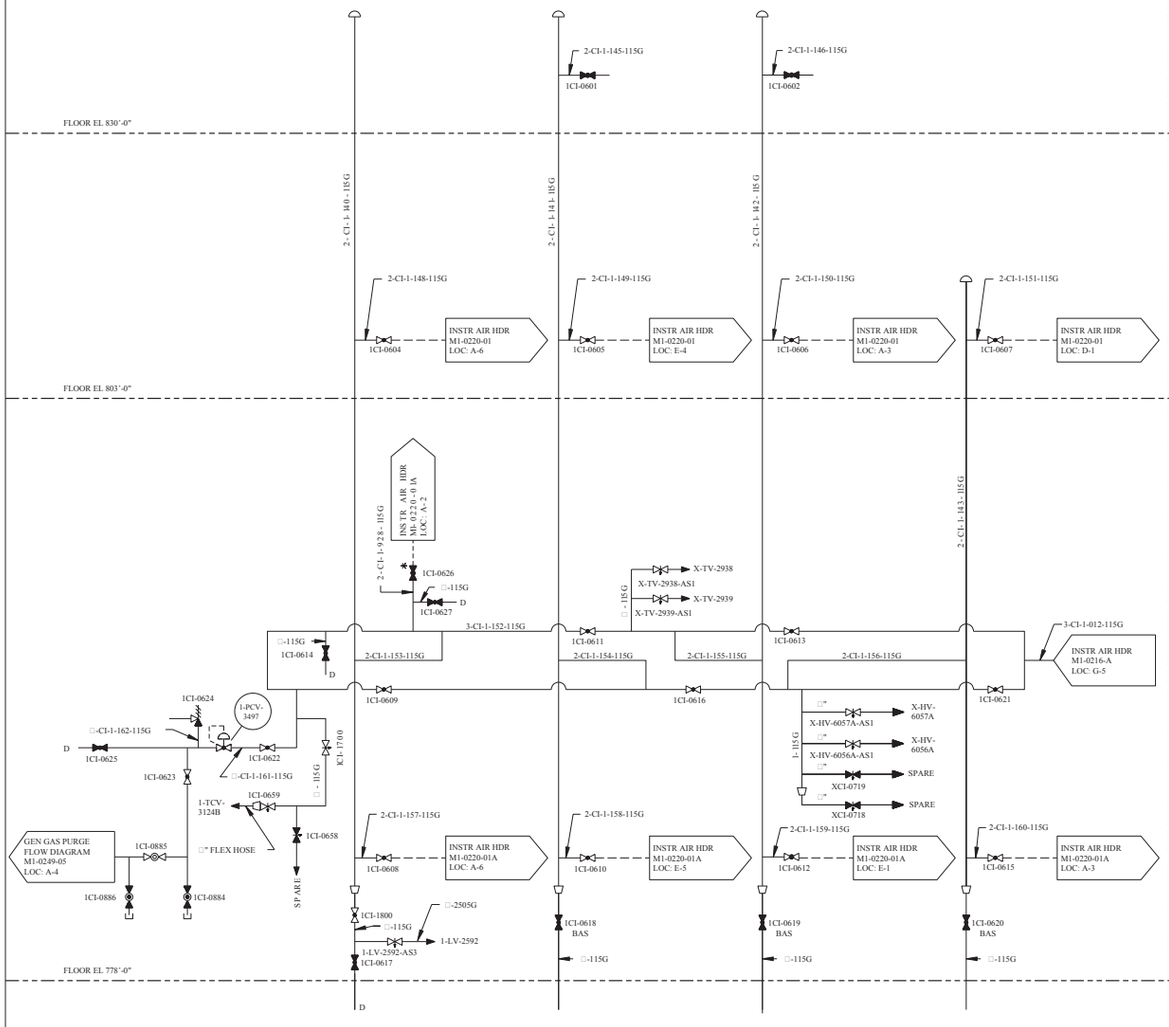

FIREWATER STORAGE TANKS

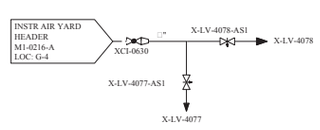

FIREWATER PUMP HOUSE

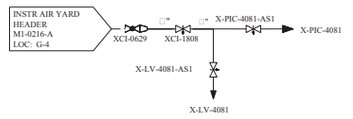

AUXILIARY BOILER BUILDING

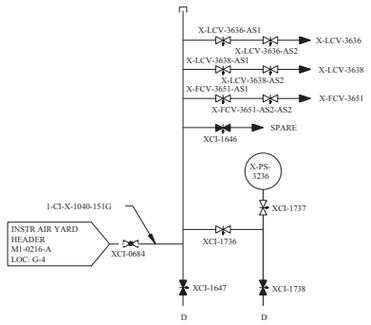

SERVICE WATER PUMP HOUSE

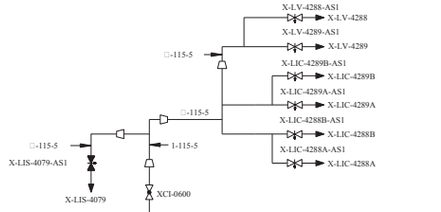

FLOOR EL 796'-0"

YARD

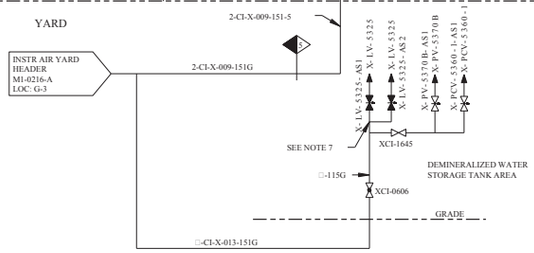

CIRCULATING WATER PUMP HOUSE

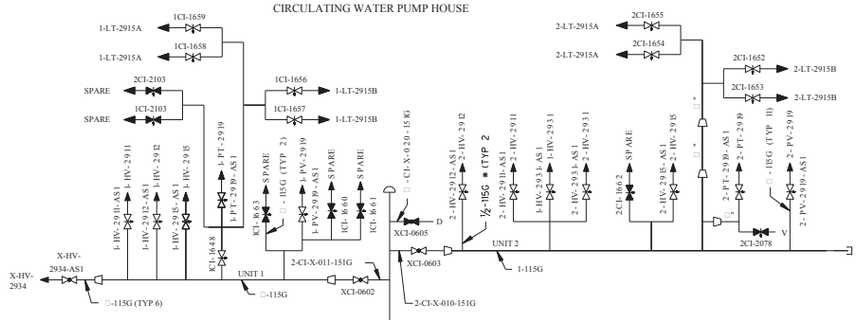

FLOOR EL 796'-0"

YARD

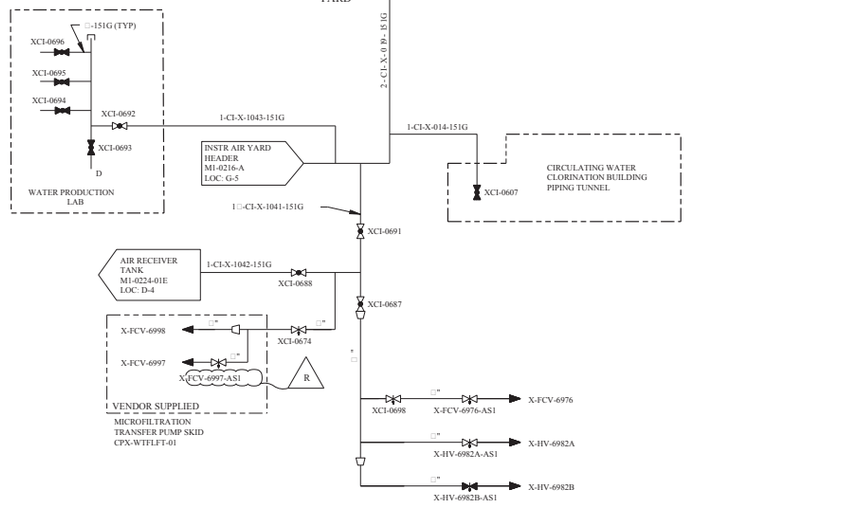

REV	DWN	CHKD	APVD	REMARKS
CP-52	MHF 01-09-2012	GAW 01-09-2012		THIS DRAWING REVISED TO INCORPORATE DESIGN CHANGE FDA 2007-003115-06-04 PER SK-0065-07-003115-06-00.

NOTES:

1. FOR MECHANICAL SYMBOLS AND NOTES SEE DRAWING M1-0200.
2. * VALVES SUPPLIED BY FIELD.
3. COMPRESSION FITTINGS FOR □" OR SMALLER LINES TO BE ASTM B68 OR B75.
4. DANGER - INSTRUMENT AIR SHALL NOT BE USED FOR BREATHING AIR WITHOUT APPROPRIATE IN-LINE CHEMICAL ABSORBERS AND PARTICULATE FILTERS. TOXIC VAPORS OR PARTICULATE MAY BE PRESENT.
5. DELETED
6. VALVES DESIGNATED BAS WILL HAVE A HANSEN FITTING FOR CONNECTION TO A USER APPARATUS.

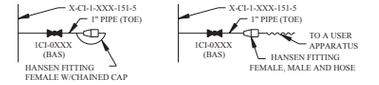

7. THE INSTRUMENT AIR ISOLATION VALVES MUST REMAIN CLOSED. X-LV-5325
NO LONGER HAS AUTO FUNCTION PER FDA-2006-000953-01.

FSAR FIGURE 9.3-1

THIS DRAWING CREATED ELECTRONICALLY

CLASS II

LUMINANT
CPNPP
GLEN ROSE, TEXAS

FLOW DIAGRAM
INSTRUMENT AIR

DWG. NO.	SH. NO.	REV.
M1-0220	-	CP-52

REF CKD 5/8/98 CP-38

$$$$$$$$ DATE$$$$$$$

me105520.dgn A M1-0220 < FINAL PRINT >

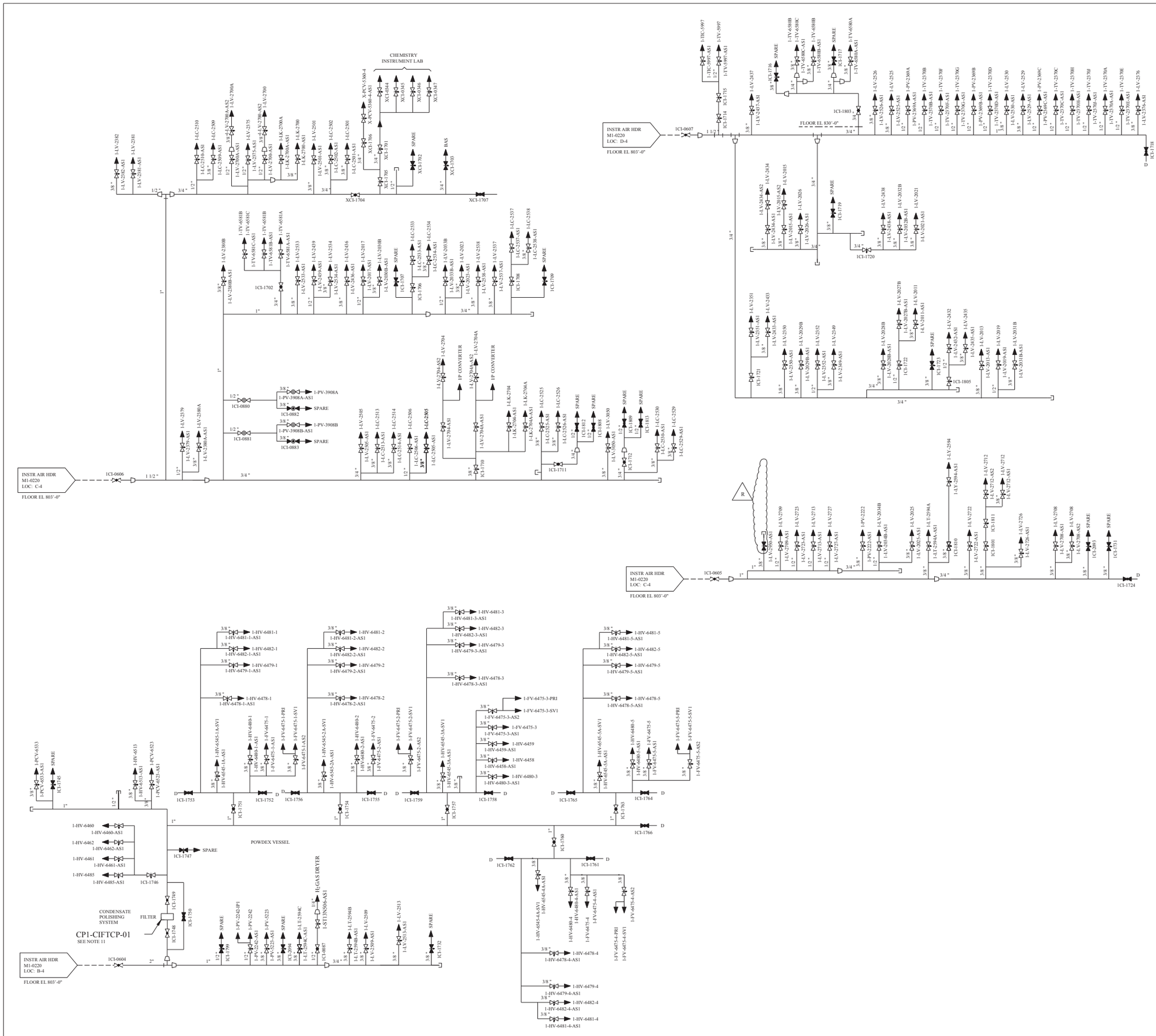

REV	DWN	CHKD	APVD	REMARKS
CP-33	DLK 10-20-2008	MM 10-20-2008		THIS DRAWING REVISED TO INCORPORATE DESIGN CHANGE: FDA-2005-004951-02-00 PER SK-0016-05-004951-02-00.

NOTES:

1. ALL LINES 3/4 " AND GREATER TO BE COPPER ASTM B88 SWEAT JOINED. CATEGORY 115G PER MS-44B.
2. ALL LINES 1/2 " AND SMALLER TO BE ASTM B68 OR B75 COMPRESSION FITTINGS, CATEGORY 158G PER MS-626.
3. FOR MECHANICAL SYMBOLS AND NOTES SEE M1-0200
4. BAS - BREATHING AIR STATION.
5. DANGER - INSTRUMENT AIR SHALL NOT BE USED FOR BREATHING AIR WITHOUT APPROPRIATE IN-LINE CHEMICAL ABSORBERS AND PARTICULATE FILTERS. TOXIC VAPORS OR PARTICULATES MAY BE PRESENT.
6. TYPICAL - INSTRUMENT AIR SUPPLIED TO AIR ACTUATED DIAPHRAGM WITH VALVE POSITIONER.
7. NO LINE NUMBERS ARE ASSIGNED SINCE THEY ARE TUBING WITH DIAMETER LESS THAN 2" BY INSTRUMENTATION.
8. ALL DRAINS COLLECTED BY LOCAL DRAIN SYSTEM, UNLESS OTHERWISE NOTED.
9. FOR VALVE CHANNEL NO. IDENTIFICATION SEE DWG M1-2200-02.
10. VALVES DESIGNATED BAS WILL HAVE A HANSEN FITTING FOR CONNECTION TO A USER APPARATUS.
11. FILTER CP1-CIFTCP-01 ELEMENTS HAVE BEEN REMOVED.

FSAR FIGURE 9.3-1

THIS DRAWING CREATED ELECTRONICALLY

DRAWING M1-0220 REV CP-6
HAS BEEN SPLIT INTO THE FOLLOWING SHEETS:
M1-0220-01
M1-0220-01A

NON–SAFETY

LUMINANT
CPNPP
GLEN ROSE, TEXAS

FLOW DIAGRAM
INSTRUMENT AIR
TURBINE BUILDING

DWG. NO.	SH. NO.	REV.
M1-0220	01	CP-33

REF CKD 5-13-98 CP-20

SSSSSSD ATESSSSS

me901500.dgn A M1-0220-01 B C D E F G < FINAL PRINT > H

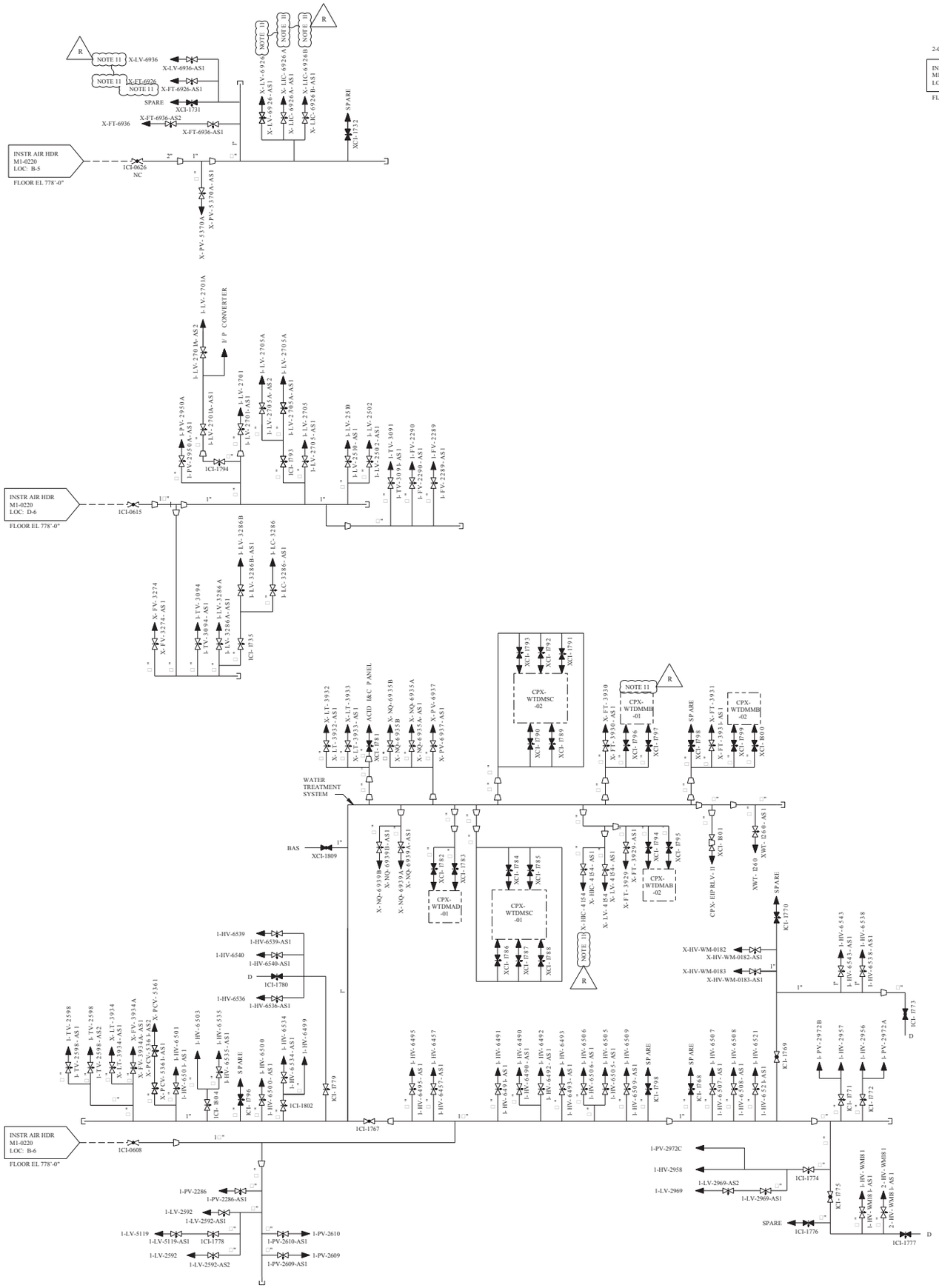

REV	DWN	CHKD	APVD	REMARKS
CP-28	HMC 01-15 2015	DJL 01-21 2015		THIS DRAWING REVISED TO INCORPORATE DESIGN CHANGE FDA-2014-000184-01-00 PER SK-0002-14-000184-01-00.

NOTES:

1. ALL LINES □" AND GREATER TO BE COPPER ASTM B88 SWEAT JOINED. CATEGORY 115G PER MS-44B.
2. ALL LINES □" AND SMALLER TO BE ASTM B68 OR B75 COMPRESSION FITTINGS, CATEGORY 158G PER MS-626.
3. FOR MECHANICAL SYMBOLS AND NOTES SEE M1-0200
4. BAS - BREATHING AIR STATION.
5. DANGER - INSTRUMENT AIR SHALL NOT BE USED FOR BREATHING AIR WITHOUT APPROPRIATE IN-LINE CHEMICAL ABSORBERS AND PARTICULATE FILTERS. TOXIC VAPORS OR PARTICULATES MAY BE PRESENT.
6. TYPICAL - INSTRUMENT AIR SUPPLIED TO AIR ACTUATED DIAPHRAGM WITH VALVE POSITIONER.
7. NO LINE NUMBERS ARE ASSIGNED SINCE THEY ARE TUBING WITH DIAMETER LESS THAN 2" BY INSTRUMENTATION.
8. ALL DRAINS COLLECTED BY LOCAL DRAIN SYSTEM, UNLESS OTHERWISE NOTED.
9. FOR VALVE CHANNEL NO. IDENTIFICATION SEE DWG M1-2200-02.
10. VALVES DESIGNATED BAS WILL HAVE A HANSEN FITTING FOR CONNECTION TO A USER APPARATUS.

AIR

X-CI-1-XXX-151-5
1" PIPE (TOE)
1CI-0XXX
(BAS)
HANSEN FITTING
FEMALE W/CHAINED CAP

X-CI-1-XXX-151-5
1" PIPE (TOE)
1CI-0XXX
(BAS)
TO A USER APPARATUS
HANSEN FITTING
FEMALE, MALE AND HOSE

11. THIS LOCATION IS ABANDONED IN PLACE PER FDA-2014-000184-01.

R

FSAR FIGURE 9.3-1

THIS DRAWING CREATED ELECTRONICALLY

DRAWING M1-0220 REV CP-6
HAS BEEN SPLIT INTO THE FOLLOWING SHEETS:
M1-0220-01
M1-0220-01A

NON–SAFETY

LUMINANT
CPNPP
GLEN ROSE, TEXAS

FLOW DIAGRAM
INSTRUMENT AIR
TURBINE BUILDING

DWG. NO.	SH. NO.	REV.
M1-0220	01A	CP-28

$$$$$$$DATE$$$$$$$ REF CKD 1/ 14/ 98 CP- 20

REV	DWN	CHKD	APVD	REMARKS
CP-12	SM 09-27-2007	JRMC 09-27-2007		THIS DRAWING REVISED TO INCORPORATE DESIGN CHANGES FDA-2005-004951-01-01 PER SK-0023-05-004951-01-00.

NOTES:

1. THIS DRAWING VOIDS AND SUPERSEDES FSI-00077F.
2. FOR ADDITIONAL TURBINE BUILDING INSTRUMENT AIR SEE M2-0220-02.
3. TUBING CATEGORY IS 115G, COPPER AND BRONZE PER SPEC MS-44B, SAME AS INSTRUMENT AIR HEADER.
4. FOR VALVE/CHANNEL NUMBER IDENTIFICATION SEE M2-2200-02.
5. DRAINS ON THIS DRAWING TO BE COLLECTED BY LOCAL FLOOR DRAIN SYSTEM.
6. FOR MECHANICAL SYMBOLS AND NOTES SEE M1-0200.
7. DANGER - INSTRUMENT AIR SHALL NOT BE USED FOR BREATHING AIR WITHOUT APPROPRIATE IN-LINE CHEMICAL ABSORBERS AND PARTICULATE FILTRATION. TOXIC VAPORS, FUMES AND PARTICULATES MAY BE PRESENT.

INSTR AIR HEADER M2-0219 LOC: D-3

INSTR AIR HEADER M2-0219 LOC: E-3

INSTR AIR HEADER M2-0219 LOC: F-3

TURBINE DECK EL 830'-0"

FL EL 803'-0"

+ Approved LDCRs

FSAR FIGURE 9.3-1

THIS DRAWING CREATED ELECTRONICALLY

DRAWING M2-0220-01 REV CP-3
HAS BEEN SPLIT INTO THE FOLLOWING SHEETS:
M2-0220-01
M2-0220-01A

NON-SAFETY

LUMINANT
CPSES
GLEN ROSE, TEXAS

FLOW DIAGRAM
INSTRUMENT AIR
TURBINE BUILDING

DWG. NO. M2-0220 | SH. NO. 01 | REV. CP-12

mc864700.dgn | M2-0220-01 | FINAL PRINT

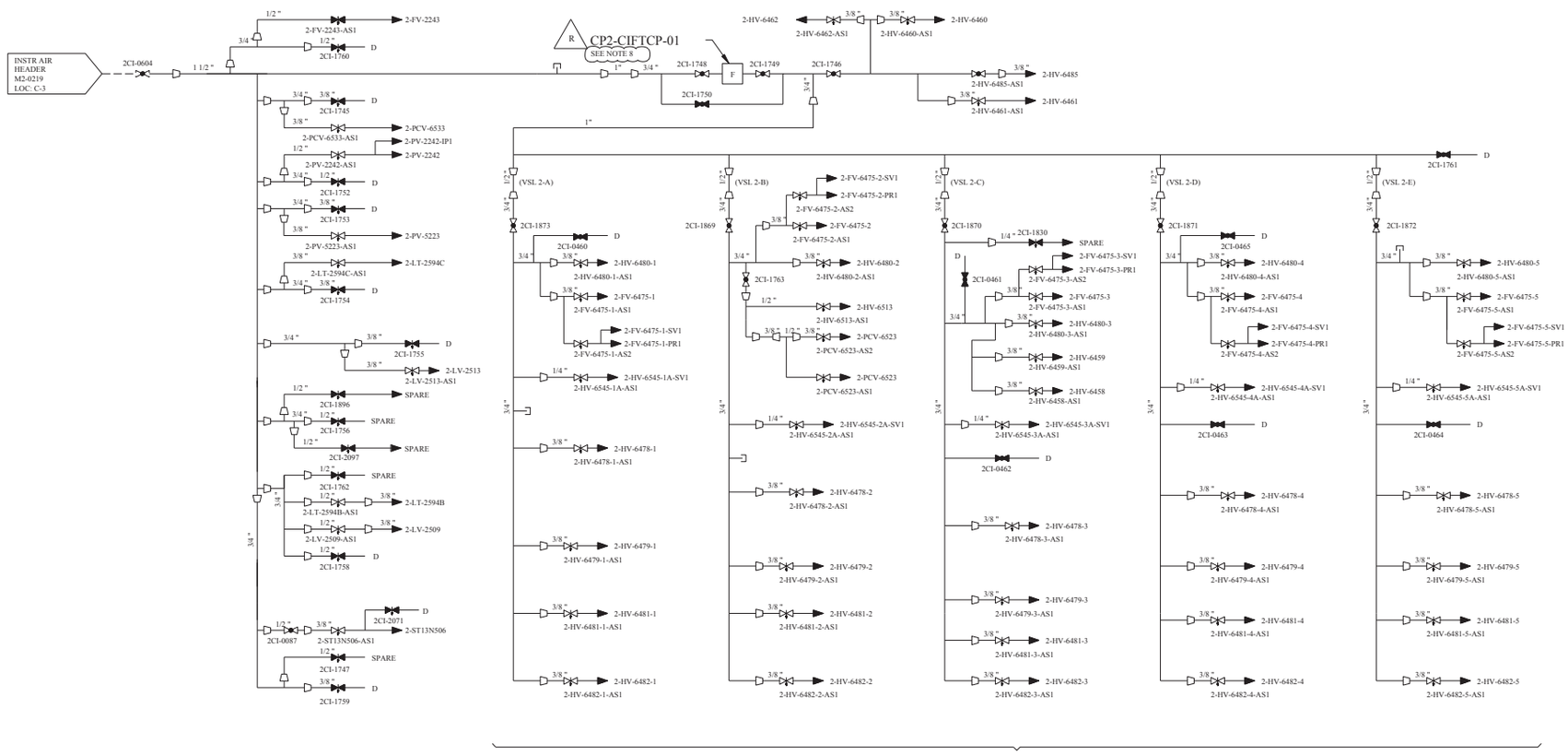

REV	DWN	CHKD	APVD	REMARKS
CP-9	DLK 10-12 2005	MM 10-12 2005		THIS DRAWING REVISED TO INCORPORATE DESIGN CHANGE FDA 2004-003147-01-00 PER SK-0002-04-003147-01-00.

NOTES:

1. THIS DRAWING VOIDS AND SUPERCEDES FSI-00077F.
2. FOR ADDITIONAL TURBINE BUILDING INSTRUMENT AIR SEE M2-0220-02.
3. TUBING CATEGORY IS 115G, COPPER AND BRONZE PER SPEC MS-44B, SAME AS INSTRUMENT AIR HEADER.
4. FOR VALVE/CHANNEL NUMBER IDENTIFICATION SEE M2-2200-02.
5. DRAINS ON THIS DRAWING TO BE COLLECTED BY LOCAL FLOOR DRAIN SYSTEM.
6. FOR MECHANICAL SYMBOLS AND NOTES SEE M1-0200.
7. DANGER - INSTRUMENT AIR SHALL NOT BE USED FOR BREATHING AIR WITHOUT APPROPRIATE IN-LINE CHEMICAL ABSORBERS AND PARTICULATE FILTRATION. TOXIC VAPORS, FUMES AND PARTICULATES MAY BE PRESENT.
8. FILTER CP2-CIFTCP-01 INTERNALS HAVE BEEN REMOVED. R

FSAR FIGURE 9.3-1

THIS DRAWING CREATED ELECTRONICALLY

DRAWING M2-0220-01 REV CP-3
HAS BEEN SPLIT INTO THE FOLLOWING SHEETS:
M2-0220-01
M2-0220-01A

NON-SAFETY

LUMINANT
CPSES
GLEN ROSE, TEXAS

FLOW DIAGRAM
INSTRUMENT AIR
TURBINE BUILDING

DWG. NO. M2-0220 | SH. NO. 01A | REV. CP-9

FINAL PRINT

REF CKD CP-7 6-30-98

me625300.dgn M2-0220-01A

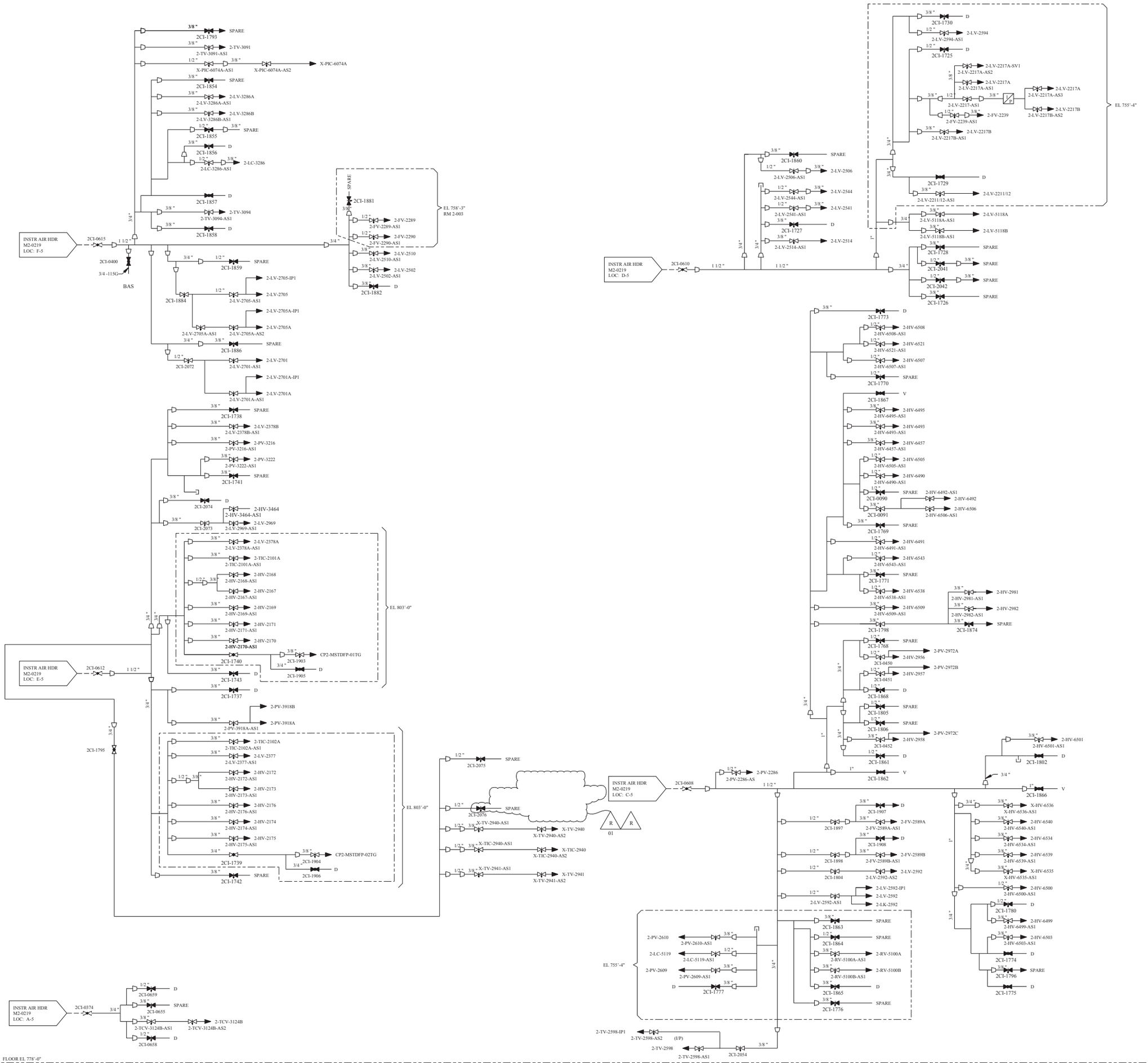

REV	DWN	CHKD	APVD	REMARKS
CP-24	DLK 06-09-2011	MM 06-09-2011		THIS DRAWING REVISED TO INCORPORATE DESIGN CHANGE FDA-2008-003933-01-03 PER SK-0022-08-003933-01-01.

NOTES:

1. THIS DRAWING VOIDS AND SUPERCEDES FSI-00077F.
2. FOR ADDITIONAL TURBINE BUILDING INSTRUMENT AIR SEE M2-0220-01.
3. TUBING CATEGORY IS 115G, COPPER AND BRONZE PER SPEC MS-44B, SAME AS INSTRUMENT AIR HEADER.
4. FOR VALVE/CHANNEL NUMBER IDENTIFICATION SEE M2-2200-02.
5. DRAINS ON THIS DRAWING TO BE COLLECTED BY LOCAL FLOOR DRAIN SYSTEM.
6. FOR MECHANICAL SYMBOLS AND NOTES SEE M1-0200.
7. DANGER - INSTRUMENT AIR SHALL NOT BE USED FOR BREATHING AIR WITHOUT APPROPRIATE IN-LINE CHEMICAL ABSORBERS AND PARTICULATE FILTRATION. TOXIC VAPORS, FUMES AND PARTICULATES MAY BE PRESENT.

FSAR FIGURE 9.3-1

THIS DRAWING CREATED ELECTRONICALLY

NON–SAFETY

LUMINANT
CPNPP
GLEN ROSE, TEXAS

FLOW DIAGRAM
INSTRUMENT AIR
UNIT 2 TURBINE BUILDING

DWG. NO.	SH. NO.	REV.
M2-0220	02	CP-24

REF CKD 10/797 CP-14

mel02510.dgn A M2-0220-02 B C D E F G FINAL PRINT H

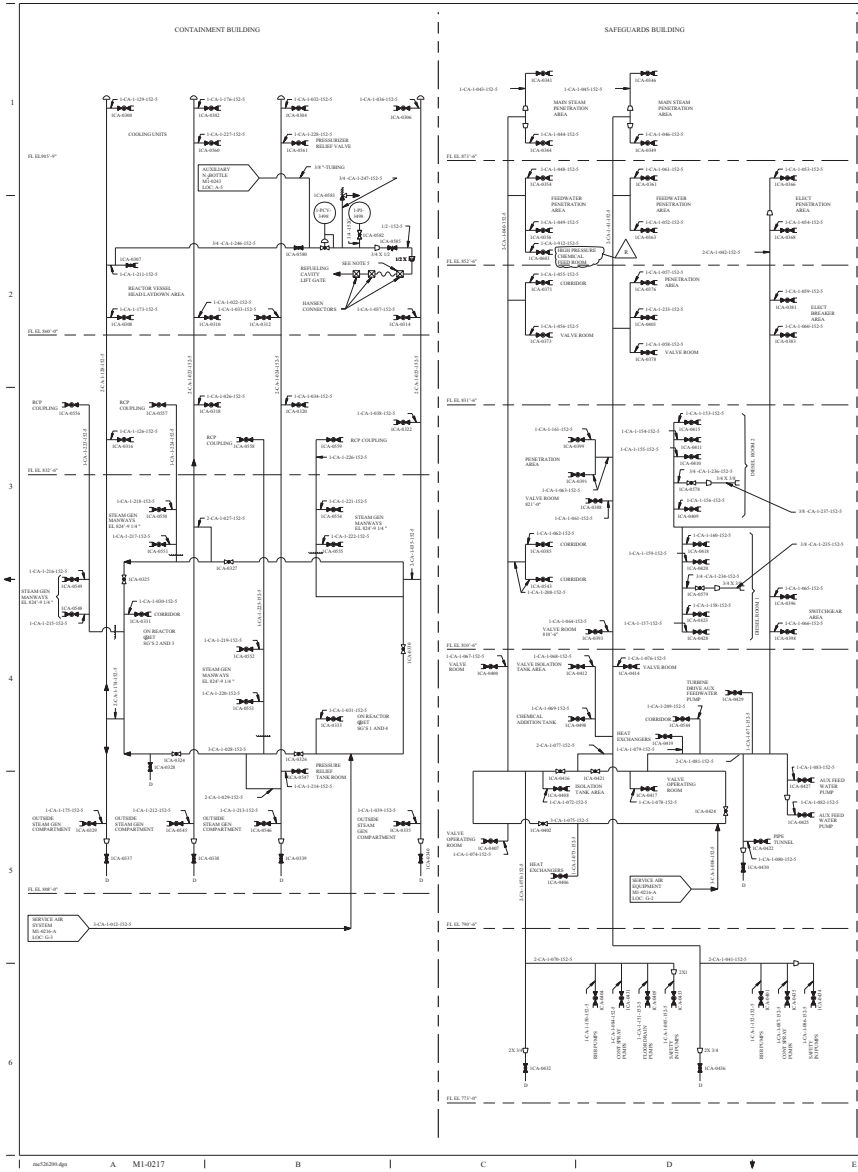

REV	DRFT	CHK	APVD	REMARKS
CP-19	[illegible]	[illegible]	[illegible]	THIS DRAWING REVISED TO INCORPORATE DESIGN CHANGES FDCN 2000-000167 TO 00-000 FDCN 00-000143 00-000147 00-00[illegible]

NOTES:

1. FOR MECHANICAL SYMBOLS AND NOTES SEE DRAWING MI-0200.
2. ALL DRAINS ARE 3/4" UNLESS OTHERWISE NOTED.
3. ALL SERVICE AIR RAIL VALVES HAVE THREADED END CONNECTIONS. BROWN AND GREEN PIPE CAPS ARE PROVIDED FOR SERVICE AIR FITTINGS. PNEUMATIC NO. 4 CAP (PP) ON THE DOWNSTREAM ENDS OF EACH VALVE.
4. CONTAINMENT PENETRATIONS MV-0007 AND MEB-0050 [illegible] INTERPRETED TO FLOW DIAGRAM MI-0301.
5. GATE PROVIDED WITH HOSE ASSEMBLY AS SHOWN IN DETAIL A.

DETAIL A



FLEX HOSE ASSEMBLY
CP-FLAHR-01

LOCATION
UNIT 1 CONTAINMENT LIFT GATE

FSAR FIGURE 9.3-2

THIS DRAWING DEPICTS FLEX PERSONNEL ONLY

DRAWING 2223-MI-0217 REV CP-7
HAS BEEN SPLIT INTO THE FOLLOWING SHEETS:
MI-0217
MI-0217-A

CLASS II

TXU POWER
CPSES
GLEN ROSE, TEXAS

FLOW DIAGRAM
SERVICE AIR SYSTEM

DWG. NO. M1-0217 | SH. NO. - | REV. CP-19

REF CORD 10/24/2003

SSSSSSSSSSSSSSSS

mz56200.dgn

TURBINE BUILDING

1-CA-1-229-152G
1CA-0562
1-CA-1-230-152G
1CA-0563
1-CA-1-196-152G
1CA-0523
LOW PRESSURE HEATERS
1-CA-1-197-152G
1CA-0524
1-CA-1-163-152G
1CA-0532
1-CA-1-108-152G
1CA-0452
1-CA-1-164-152G
1CA-0533
1-CA-1-095-152G
1CA-0437
LOW PRESSURE HEATERS
1-CA-1-130-152G
1CA-0438
1-CA-1-167-152G
1CA-0536
1-CA-1-114-152G
1CA-0466
1-CA-1-168-152G
1CA-0537
SERVICE AIR EQUIPMENT M1-0216-A LOC: G-1
1-CA-1-165-152G
1CA-0534
1-CA-1-112-152G
1CA-0457
1-CA-1-131-152G
1CA-0440
1-CA-1-166-152G
1CA-0535
1-CA-1-113-152G
1CA-0461
1-CA-1-132-152G
1CA-0442
1-CA-1-107-152G
1CA-0448
1-CA-1-162-152G
1CA-0531
2-CA-1-89-152G
1-CA-1-118-152G
1CA-0471
1-CA-1-169-152G
1CA-0538
FL EL 830'-0"
YARD
1-CA-X-901-152G
1" PLUG
XCA-0459
1-CA-1-180-152G
DEAERATOR
1CA-0500
1-CA-1-099-152G
COND POLISHING
1CA-0443
2-CA-1-207-152G
1-CA-1-198-152G
1CA-0525
LOW PRESSURE HEATERS
1-CA-1-199-152G
1CA-0526
2-CA-1-190-152G
1-CA-1-110-152G
1CA-0454
1-CA-1-137-152G
1CA-0455
2-CA-1-201-152G
1-CA-1-096-152G
1CA-0441
LOW PRESSURE HEATERS
1-CA-1-135-152G
1CA-0451
1-CA-1-115-152G
1CA-0468
1-CA-1-140-152G
1CA-0462
1-CA-1-133-152G
1CA-0444
1-CA-1-134-152G
1CA-0449
S.G. F.P. TURBINE DRIVES
1-CA-1-170-152G
1CA-0539
1-CA-1-171-152G
1CA-0540
3-CA-1-004-B2G
2-CA-1-240-B2G
1-CA-1-241-B2G
1CA-0571
1-CA-1-242-B2G
1CA-0572
1CA-0575
2-CA-1-91-B2G
1-CA-1-047-152G
1CA-0506
HIGH PRESSURE HEATERS
1-CA-1-188-152G
1CA-0507
1-CA-1-111-152G
1CA-0459
1-CA-1-138-152G
1CA-0458
2-CA-1-243-152G
1-CA-1-097-152G
1CA-0439
2-CA-1-92-152G
1-CA-1-116-152G
1CA-0463
1-CA-1-139-152G
1CA-0460
2-CA-1-85-B2G
1-CA-1-244-B2G
1CA-0574
1CA-0576
1CA-0573
1-CA-1-245-B2G
2-CA-1-189-152G
1-CA-1-189-152G
TURB OIL ROOM
1CA-0511
1-CA-1-109-152G
1CA-0450
1-CA-1-136-152G
1CA-0453
2-CA-1-94-152G
1-CA-1-117-152G
1CA-0473
1-CA-1-141-152G
1CA-0464
R
FL EL 803'-0"
2-CA-1-088-B2G
2-CA-1-183-152G
2-CA-1-182-152G
3-CA-1-121-152G
2-CA-1-200-152G
2-CA-1-102-152G
1□-CA-1-210-152G
1CA-0577
2-CA-1-178-152G
2-CA-1-105-152G
2-CA-1-204-152G
2-CA-1-205-152G
TO GANTRY CRANE LAYDOWN AREA
2-CA-1-187-152G
2-CA-1-127-152G
1CA-0456
1CA-0470
1CA-0474
1CA-0469
1CA-0504
1-CA-1-122-152G
1CA-0482
1-CA-1-146-152G
1CA-0476
1-CA-1-123-152G
1CA-0487
1-CA-1-147-152G
1CA-0480
1-CA-1-186-152G
1CA-0508
CONTROL FLUID TANK
1-CA-1-149-152G
1CA-0488
2-CA-1-104-152G
1CA-0510
1CA-0496
1-CA-1-191-152G
LUBE OIL STORAGE ROOM
1CA-0512
2-CA-1-101-152G
1-CA-1-119-152G
1CA-0513
1CA-0475
2-CA-1-106-152G
1-CA-1-125-152G
1CA-0494
CA-0530
AIR CONTROL STATIONS BY HUNGERFORD & TERRY
2-CA-1-050-152G
WATER TREATMENT SYSTEM M1-0224 LOC: G-6
PHASE SEPARATOR TANK M1-0244-01A LOC: C-3
1-CA-1-120-152G
1CA-0479
1-CA-1-145-152G
1CA-0541
1-CA-1-124-152G
1CA-0491
1-CA-1-148-152G
1CA-0483
1-CA-1-098-152G
AUX CONDR
1CA-0446
1-CA-1-172-152G
1CA-0445
1-CA-1-206-152G
AUX BOILER
1CA-0529
TURBINE GENERATOR
2-CA-1-103-152G
1-CA-1-144-152G
1CA-0472
1-CA-1-181-152G
DEAERATOR PUMPS
1CA-0501
1CA-0477
1-CA-1-100-152G
1CA-0499
2X1
2X1□
M1-0224
LOC: G-6
1-CA-1-184-152G
1CA-0505
BACKWASH
1-CA-1-142-152G
1CA-0467
COND VAC PUMPS
1-CA-1-143-152G
1CA-0542
1-CA-1-202-152G
1CA-0527
TURBINE PLANT COOLING WATER PUMPS
1-CA-1-203-152G
1CA-0528
1CA-0484
2-CA-1-093-152G
1CA-0465
1CA-0509
1CA-0489
1CA-0490
□-152G
□-CA-1-177-152G
1CA-0510
1CA-0496
1CA-0475
1CA-0502
1CA-0503
1CA-0566
1CA-0567
1CA-0568
1CA-0569
FL EL 778'-0"
1-CA-1-192-152G
1CA-0515
1CA-0481
1-CA-1-194-152G
1CA-0517
1CA-0493
1-CA-1-193-152G
1CA-0516
1CA-0485
1-CA-1-195-152G
1CA-0518
1CA-0497
1CA-0514
1CA-0478
PIT FL EL 758'-6" ±
PIT FL EL 755'-3"
PIT FL EL 758'-6"

FUEL BUILDING

HOT PHASE SEPARATOR TANK M1-0244-01A LOC: G-3
CP
CA
1□-CA-X-087-152-5
1-CA-X-154-152-5
XCA-0448
SPENT FUEL POOL
XCA-0386
1-CA-X-079-152-5
1-CA-X-080-152-5
NEW FUEL STORAGE PIT
XCA-0383
XCA-0379
2-CA-X-089-152-5
FL EL 860'-0"
1-CA-X-077-152-5
1-CA-X-078-152-5
NEW FUEL STOP PIT
XCA-0382
1-CA-X-083-152-5
NEW FUEL RECEIVING AREA
XCA-0387
1-CA-X-084-152-5
XCA-0389
1-CA-X-088-152-5
MEZZ LEVEL EL 838'-9"
XCA-0391
1-CA-X-918-152-5
FL EL 831'-6"
2-CA-X-089-152-5
1-CA-X-095-152-5
DECONTAMINATION AREA
XCA-0500
SPENT FUEL POOL PUMP & HEAT EXCH ROOM NO. 2
XCA-0400
1-CA-X-092-152-5
RAILROAD BAY OUTLET
XCA-0393
1-CA-X-093-152-5
SPENT FUEL POOL PUMP & HEAT EXCH ROOM NO. 1
XCA-0398
1-CA-X-091-152-5
CLEAN RADWASTE CONTAINER STORAGE AREA
XCA-0394
1-CA-X-092-152-5
FDS/RAD VAULT PIT
XCA-0399
□-CA-X-922-152-5
FDS/RAD VAULT PIT
XCA-0392
□-CA-X-921-152-5
1-CA-X-090-152-5
SKIMMER PUMP/COMPACTOR
XCA-0395
SERVICE AIR EQUIPMENT M1-0216-A LOC: G-3
3-CA-1-008-152-5
□-152G
XCA-0397
FL EL 810'-6"

CLARIFIER CHEMICAL FEED BUILDING

SERVICE AIR EQUIPMENT M1-0216-A LOC: G-2
1-CA-X-916-152G
XCA-0618

SERVICE WATER PUMPHOUSE

1-CA-X-096-152-5
1-CA-X-097-152-5
XCA-0402
XCA-0404
XCA-0476
1-CA-X-905-152-5
XCA-0475
TRAVELING SCREEN BUBBLER LEVEL M1-0231 LOC: D-4
2-CA-X-013-152G
2-CA-X-013-152-5
SERVICE AIR EQUIPMENT M1-0216-A LOC: G-1
FL EL 796'-0"

FIRE WATER PUMPHOUSE

□-CA-X-912-152G
XCA-0613
□-CA-X-911-152G
XCA-0612
□-CA-X-910-152G
XCA-0611
□-CA-X-914-152G
XCA-0616
□-CA-X-909-152G
XCA-0610
2-CA-X-907-152G
SERVICE AIR SYSTEM M1-0216-A LOC: G-1
XCA-0614
1-CA-X-908-152G

CIRCULATING WATER PUMPHOUSE

115
152
□-115G
XCA-0406
XCA-0407
SEE NOTE 5
XCA-0409
XCA-0411
XCA-0413
1-CA-X-101-152G
1-CA-X-111-B2G
1-CA-X-112-B2G
1-CA-X-910-B2G
SERVICE AIR EQUIPMENT M1-0216-A LOC: G-2
2-CA-X-015-152G
□-CA-X-113-152G
XCA-0415
FL EL 795'-9"

CONTROL BUILDING

1-CA-X-144-152-5
XCA-0439
CONTROL ROOM HVAC ROOM FOR TRAIN "B" EQUIP
1-CA-X-146-152-5
XCA-0435
HVAC ROOM FOR MISC EQUIPMENT
1-CA-X-143-152-5
XCA-0438
CONTROL ROOM HVAC ROOM FOR TRAIN "B" EQUIP
1-CA-X-142-152-5
XCA-0437
CONTROL ROOM HVAC ROOM FOR TRAIN "A" EQUIP
1-CA-X-145-152-5
XCA-0434
HVAC ROOM FOR MISC EQUIPMENT
1-CA-X-141-152-5
XCA-0436
CONTROL ROOM HVAC ROOM FOR TRAIN "A" EQUIP
R
FL EL 854'-4"
CONTROL ROOM 135
1-CA-X-149-152-5
XCA-0442
1-CA-X-919-152-5
1-CA-X-920-152-5
MECHANICAL HOT SHOP
1-CA-X-150-152-5
XCA-0441
XCA-0501
INSTRUMENT SHOP
1-CA-X-167-152-5
XCA-0447
2-CA-X-140-152-5
XCA-0502
XCA-0503
CABLE ROOM 133
CABLE ROOM 134
CORRIDOR 207 SERVICE AIR SYS M1-0237 LOC: G-4
FL EL 810'-6"
2-CA-X-016-152-5
1-CA-X-147-152-5
COMPRESSORS & SGBD HX AREA
XCA-0444
SERVICE AIR EQUIPMENT M1-0216 LOC: G-3
1-CA-X-148-152-5
CHILLER ROOM
XCA-0443
1-CA-X-152-152-5
COMPRS & SGBD HX AREA
XCA-0445
1-CA-X-153-152-5
CHILLER ROOM
XCA-0446
□-152G
XCA-0440
FL EL 778'-0"

NOTES:

1. FOR MECHANICAL SYMBOLS AND NOTES SEE DRAWING M1-0200.
2. ALL DRAINS ARE □" UNLESS OTHERWISE NOTED.
3. UNLESS OTHERWISE SHOWN, ALL SERVICE AIR BALL VALVES HAVE THREADED END CONNECTIONS AND QUICK DISCONNECT FITTING (CHICAGO PNEUMATIC NO. C15120Y) ON THE DOWNSTREAM END OF EACH VALVE.
4. MOISTURE FILTER SUCH AS NORGREN MODEL F18-C00A OR EQUIVALENT MAY BE ADDED TO REMOVE WATER IN SUPPLY LINE.
5. CONNECTION PROVIDED AT EACH LEVEL PROBE FOR FLUSHING.
6. VALVES XCA-0434 THRU -0439 AND -0501 ARE CAPPED TO ENSURE THE INTEGRITY OF THE CONTROL ROOM ENVELOPE WHEN VALVES ARE NOT IN SERVICE.

REV	DWN	CHKD	APVD	REMARKS
CP-19	JRMC 04-23-2012	DJL 04-23-2012		THIS DRAWING REVISED TO INCORPORATE DESIGN CHANGE FDA 2012-000051-01-00 PER SK-0001-12-000051-01-00.

FSAR FIGURE 9.3-2

THIS DRAWING CREATED ELECTRONICALLY

DRAWING 2323-M1-0217 REV CP-7
HAS BEEN SPLIT INTO THE FOLLOWING SHEETS:
M1-0217
M1-0217-A

CLASS II

LUMINANT
CPNPP
GLEN ROSE, TEXAS

FLOW DIAGRAM
SERVICE AIR SYSTEM

DWG. NO. M1-0217 | SH. NO. A | REV. CP-19

$$$$$$$DATE$$$$$$$ REF CHKD 07/30/2002

me103740.dgn A M1-0217-A B C D E F G < FINAL PRINT > H

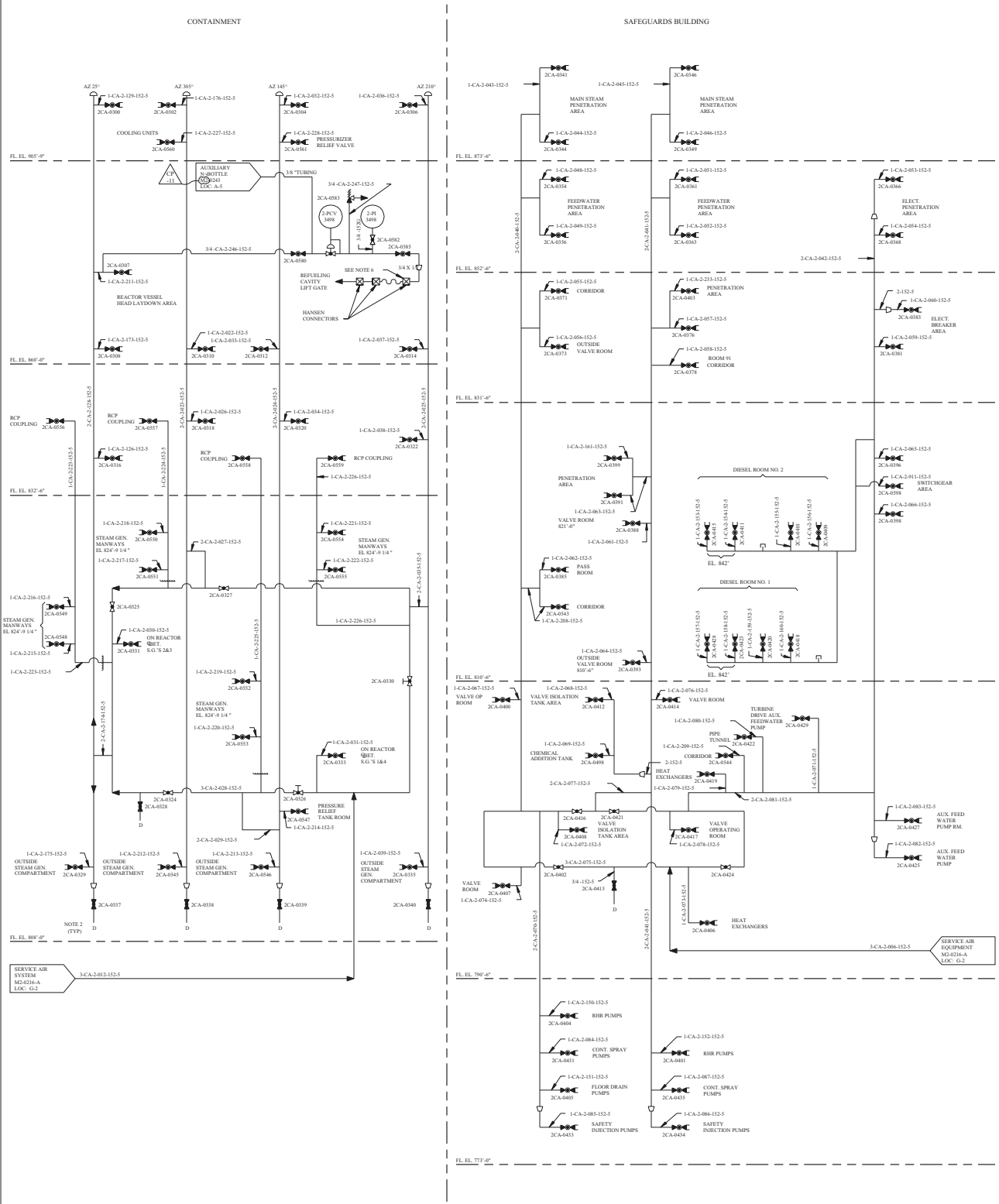

REV.	DWN	CHKD	APVD	REMARKS
CP-11	DLK 06-11-1999			THIS DRAWING REVISED FOR EDITORIAL CHANGE AS NOTED.

NOTES:

1. FOR MECHANICAL SYMBOLS AND NOTES SEE DRAWING M1-0200.
2. ALL DRAINS ARE 3/4 " UNLESS OTHERWISE NOTED.
3. ALL SERVICE AIR BALL VALVES ARE SUPPLIED WITH THREADED CONNECTIONS. BROWN & ROOT WILL ATTACH A QUICK DISCONNECT FITTING ON THE DOWNSTREAM END OF EACH VALVE. (CHICAGO PNEUMATIC NUMBER 1512DY)
4. FABRIC REINFORCED HOSE (AEROQUIP NUMBER 2575-4 OR EQUAL) WITH 1/4 " HOSE TO 1/4 " MALE NPT SLIP-ON HOSE CONNECTORS (AEROQUIP NUMBER 4716-4-4 OR EQUAL) SEE THE RESPECTIVE PRESPRAY CORP GATE DRAWING FOR DETAILS ABOUT THE CONNECTION WITH THE VENDOR SUPPLIED HOSE COUPLING.
5. UNLESS OTHERWISE NOTED ALL DRAINS COLLECTED BY LOCAL FLOOR DRAIN SYSTEM.
6. GATE PROVIDED WITH HOSE ASSEMBLY AS SHOWN IN DETAIL A.

DETAIL A

TO GATE ⊠〰⊠ SUPPLY

* CHECK VALVE

FLEX HOSE ASSEMBLY	LOCATION
CP2-LAFHRB-01	UNIT 2 CONTAINMENT LIFT GATE

FSAR FIGURE 9.3-2

THIS DRAWING CREATED ELECTRONICALLY

CLASS II

TXU ELECTRIC
CPSES
GLEN ROSE, TEXAS

FLOW DIAGRAM
SERVICE AIR SYSTEM

DWG. NO.	SH. NO.	REV.
M2-0217	-	CP-11

CPE | A | B | C | D | E | F | G | H

me0001ov.dgn

$$$$$$STA.TESSSSS

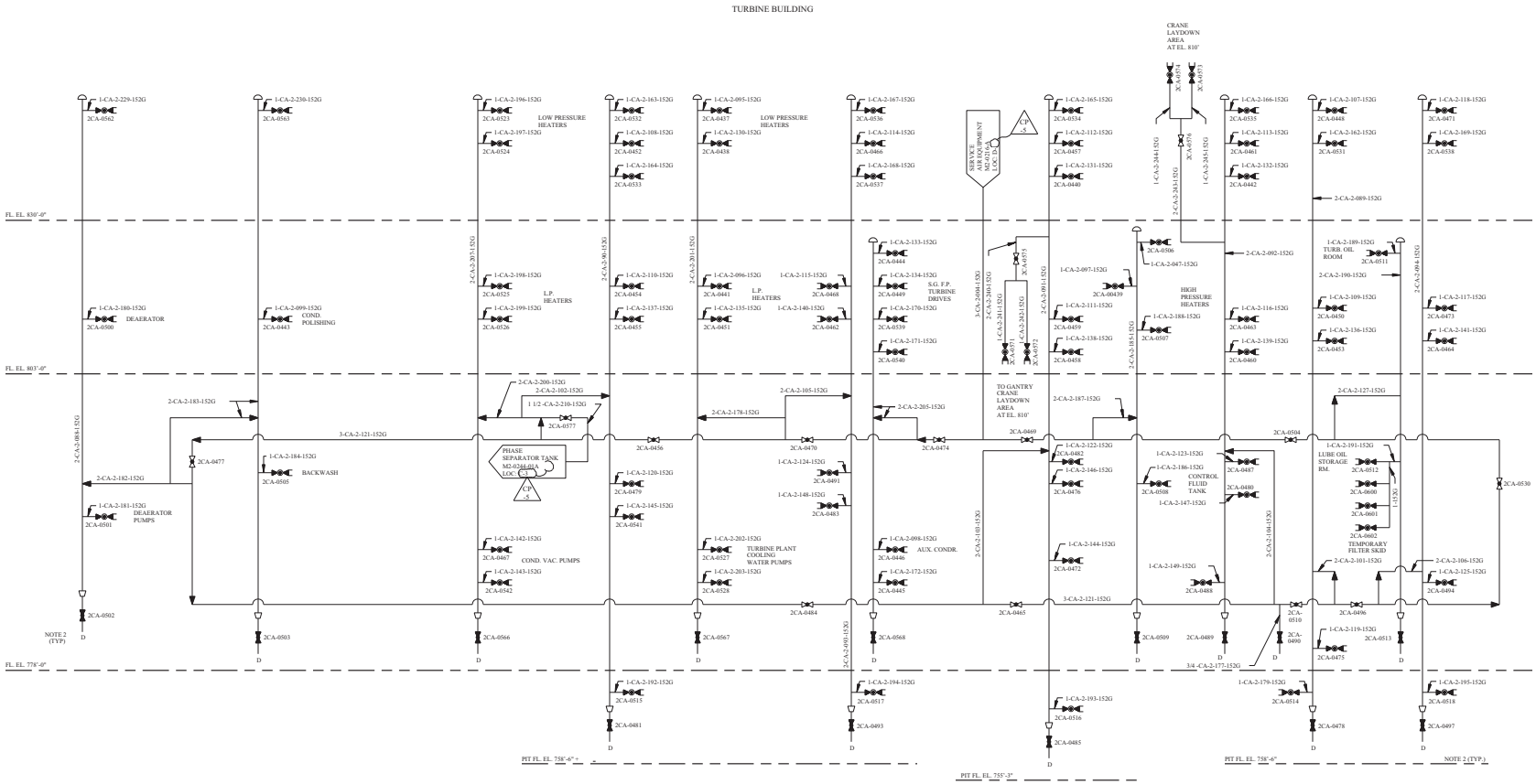

REV	DWN	CHKD	APVD	REMARKS
CP-5	CA 11-02 1996			THIS DRAWING REVISED TO INCORPORATE EDITORIAL CHANGES AS NOTED.

NOTES

1. FOR MECHANICAL SYMBOLS AND NOTES SEE DRAWING M1-0200.
2. ALL DRAINS ARE 3/4 " UNLESS OTHERWISE NOTED.
3. ALL SERVICE AIR BALL VALVES ARE SUPPLIED WITH THREADED CONNECTIONS. BROWN & ROOT WILL ATTACH A QUICK DISCONNECT FITTING ON THE DOWNSTREAM END OF EACH VALVE. (CHICAGO PNEUMATIC NUMBER 1512DY)
4. FABRIC REINFORCED HOSE (AEROQUIP NUMBER 2575-4 OR EQUAL) WITH 1/4 " HOSE TO 1/4 " MALE NPT SLIP-ON HOSE CONNECTORS (AEROQUIP NUMBER 4738-4-4 OR EQUAL) SEE THE RESPECTIVE PRESPRAY CORP GATE DRAWING FOR DETAILS ABOUT THE CONNECTION WITH THE VENDOR SUPPLIED HOSE COUPLING.
5. UNLESS OTHERWISE NOTED ALL DRAINS COLLECTED BY LOCAL FLOOR DRAIN SYSTEM.

FSAR FIGURE 9.3-2

THIS DRAWING CREATED ELECTRONICALLY

CLASS II
(NUCLEAR SAFETY-RELATED)
SAFETY CLASS 1 SEISMIC CATEGORY I
SAFETY CLASS 2 CLASS 1E
SAFETY CLASS 3 ASSOCIATED CIRCUITS

TXU ELECTRIC
CPSES
GLEN ROSE, TEXAS

FLOW DIAGRAM
SERVICE AIR SYSTEM

DWG. NO.	SH. NO.	REV.
M2-0217	A	CP-5

SSSSSSDATESSSSS

vs0000th.dgn

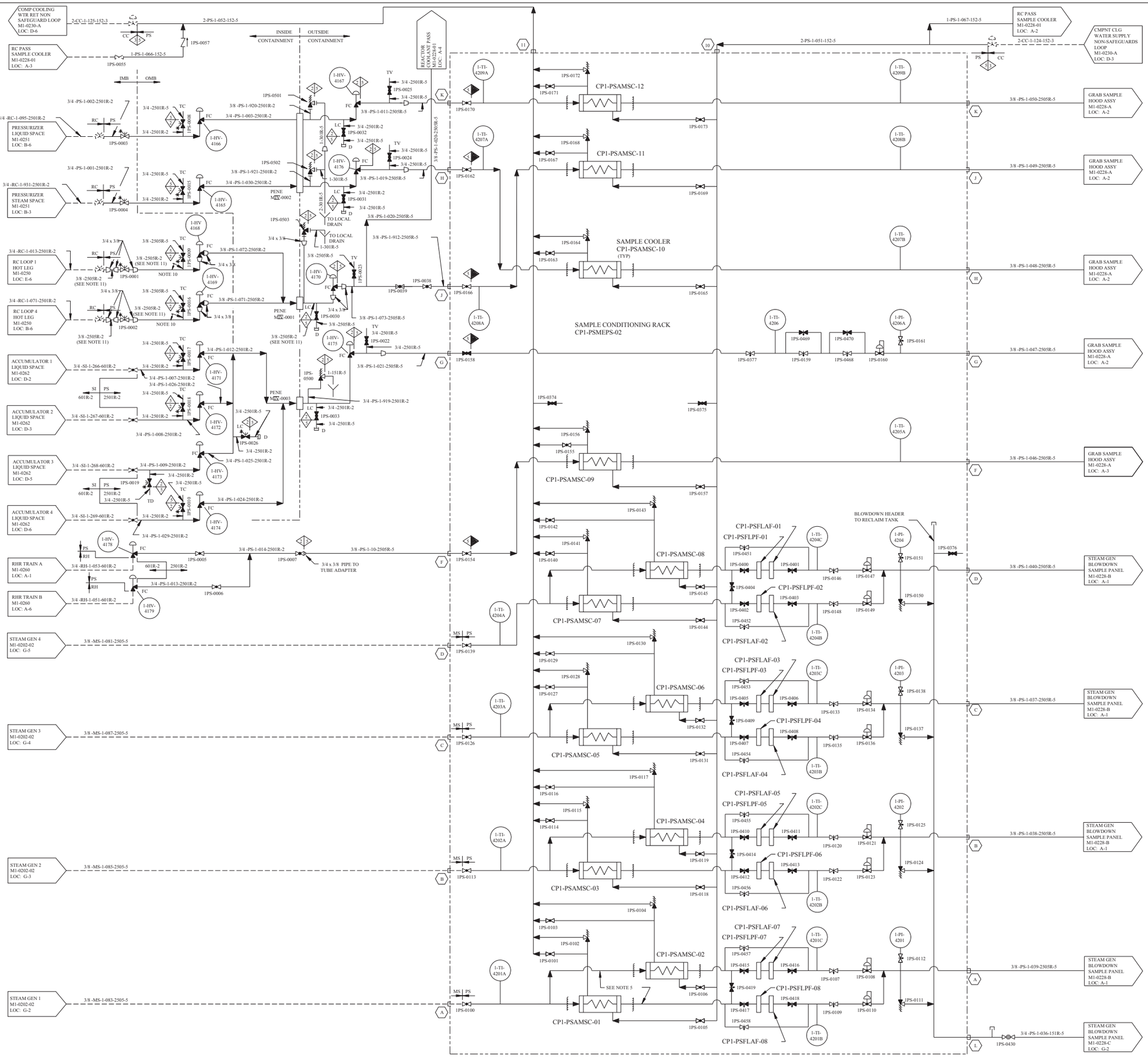

REV	DWN	CHKD	APVD	REMARKS
CP-32	JRMC 03-06-2006	DJL 03-10-2006		THIS DRAWING REVISED TO INCORPORATE DESIGN CHANGE FDA 2004-000371-01-00 PER SK-0001-04-000371-01-00.

NOTES:

1. TAG NUMBERS:
   GRAB SAMPLE HOOD ASSEMBLY CP1-PSMEPS-01 ,
   SAMPLE CONDITIONING RACK CP1-PSMEPS-02 ,
   STEAM GENERATOR BLOWDOWN SAMPLE PANEL CP1-PSMEPS-03 .
2. RADIATION MONITOR LOCATED REMOTELY OUTSIDE SAMPLE ROOM.
3. FOR MECHANICAL SYMBOLS AND NOTES SEE DRAWING M1-0200.
4. ⬡ INDICATE EQUIPMENT NOZZLE CONNECTIONS IN ACCORDANCE WITH WATER EQUIPMENT INC DWG 58696, 58697, AND 58698.
5. PARALLEL SAMPLE COOLERS PRESSURE REDUCERS, AND REGULATORS ARE PROVIDED TO ASSURE ADEQUATE SAMPLE FLOW.
6. PARALLEL PRESSURE REGULATORS AND RELATED HARDWARE WERE ADDED TO ASSURE ADEQUATE SAMPLE PURGE RATES.
7. ALL pH AND CONDUCTIVITY HAVE AUTOMATIC TEMPERATURE COMPENSATION.
8. TUBING IN RACK 3/8 "-.065 WALL - 316 SS
   TUBING IN BLOWDOWN SAMPLE PANEL AND GRAB SAMPLE HOOD IS 3/8 " OR 1/4 "-.065 WALL -316 SS TO PRESSURE REDUCING VALVES; 3/8 " - .049 WALL - 316 SS TO FLOW METERS FOR ANALYZERS AND GRAB SAMPLE VALVES; 1/4 "- .049. ALL 316 SS TO ANALYZERS AND GRAB SAMPLE VALVES; ALL PER ASTM-A-213.
9. DELETED
10. SAMPLE DELAY TIME OF 60 SECONDS INSIDE MISSILE BARRIER (IMB) REQUIRED FOR N-16 DECAY.
11. SAFETY CLASS 2 TUBING MATERIAL:
    SA213, TYPE 316, TUBING
    3/8 OD x 0.049 WALL
    DESIGN PRESS 2485 PSIG
    DESIGN TEMP 650°

FSAR FIGURE 9.3-4

THIS DRAWING CREATED ELECTRONICALLY

DRAWING 2323-M1-0228	REV CP-7
HAS BEEN SPLIT INTO THE FOLLOWING SHEETS:	
M1-0228	
M1-0228-A	
M1-0228-B	

CLASS I
(NUCLEAR SAFETY-RELATED)

SAFETY CLASS 1	SEISMIC CATEGORY I
SAFETY CLASS 2	CLASS 1E
SAFETY CLASS 3	ASSOCIATED CIRCUITS

TXU POWER
CPSES
GLEN ROSE, TEXAS

FLOW DIAGRAM
PROCESS SAMPLING
SYSTEM

DWG. NO.	SH. NO.	REV.
M1-0228	-	CP-32

FINAL PRINT

REF CKD 9/3/97 CP-26

me698200.dgn

REV	DWN	CHKD	APVD	REMARKS
CP-22	LKS 07-23-2007	RMG 07-23-2007		THIS DRAWING REVISED TO INCORPORATE DESIGN CHANGE FDA 2007-002268-01-02 PER SK-0001-07-002268-01-02.

NOTES:

1. TAG NUMBERS
   GRAB SAMPLE HOOD ASSEMBLY CP1-PSMEPS-01 ,
   SAMPLE CONDITIONING RACK CP1-PSEMPS-02 ,
   STEAM GENERATOR BLOWDOWN SAMPLE PANEL CP1-PSMEPS-03 .
2. RADIATION MONITOR LOCATED REMOTELY OUTSIDE SAMPLE ROOM.
3. FOR MECHANICAL SYMBOLS AND NOTES SEE DRAWING M1-0200.
4. ⬡ INDICATE EQUIPMENT NOZZLE CONNECTIONS IN ACCORDANCE WITH WATER EQUIPMENT INC DWG 58696, 58697, AND 58698.
5. PARALLEL SAMPLE COOLERS PRESSURE REDUCERS, AND REGULATORS ARE PROVIDED TO ASSURE ADEQUATE SAMPLE FLOW.
6. PARALLEL PRESSURE REGULATORS AND RELATED HARDWARE WERE ADDED TO ASSURE ADEQUATE SAMPLE FLOW.
7. ALL pH AND CONDUCTIVITY HAVE AUTOMATIC TEMPERATURE COMPENSATION.
8. TUBING IN RACK 3/8 "-.065 WALL - 316 SS
   TUBING IN BLOWDOWN SAMPLE PANEL AND GRAB SAMPLE HOOD IS 3/8 "-.049 WALL OR 1/4 "-.065 WALL - 316 SS TO PRESSURE REDUCING VALVES; 3/8 "-.049 WALL - 316 SS TO FLOW METERS FOR ANALYZERS AND GRAB SAMPLE VALVES; 1/4 "-.049 WALL - 316 SS TO ANALYZERS AND GRAB SAMPLE VALVES; ALL PER ASTM-A-213.
9. DELETED
10. SAMPLE DELAY TIME OF 60 SECONDS INSIDE MISSILE BARRIER (IMB) REQUIRED FOR N-16 DECAY.
11. ISOLATION VALVES ASSOCIATED WITH THE GRAB SAMPLE VESSELS ASSEMBLIES ARE TO BE CLOSED EXCEPT DURING GRAB SAMPLE OPERATION.
12. SAMPLE BOTTLE ASSEMBLY IS STORED AT A REMOTE LOCATION BY CHEMISTRY.
13. GRAB SAMPLE QUICK DISCONNECT FITTINGS MAY BE UTILIZED FOR OTHER IN-LINE SAMPLING INSTRUMENTATION.
14. □ INDICATES EQUIPMENT CONNECTIONS IN ACCORDANCE WITH ORBISPHERE LABORATORIES DWG 4586-S-100.
15. THERMAL SHUTOFF VALVE BY SENTRY EQUIPMENT CORPORATION.
16. GRAB SAMPLE QUICK DISCONNECT FITTINGS MAY BE UTILIZED AT THIS LOCATION FOR ARGON INJECTION TO VOLUME CONTROL TANK REFERENCE M1-0243-01 (B-6).

DRAWING 2323-M1-0228 REV CP-7
HAS BEEN SPLIT INTO THE FOLLOWING SHEETS:
M1-0228
M1-0228-A
M1-0228-B

CLASS I
(NUCLEAR SAFETY-RELATED)
SAFETY CLASS 1 — SEISMIC CATEGORY I
SAFETY CLASS 2 — CLASS 1E
SAFETY CLASS 3 — ASSOCIATED CIRCUITS

LUMINANT
CPSES
GLEN ROSE, TEXAS

FLOW DIAGRAM
PROCESS SAMPLING
SYSTEM

DWG. NO.	SH. NO.	REV.
M1-0228	A	CP-22

FSAR FIGURE 9.3-4

THIS DRAWING CREATED ELECTRONICALLY

REF CHKD 11/06/2002

me0006ge.dgn A M1-0228-A B C D E F G FINAL PRINT H

REV	DWN	CHKD	APVD	REMARKS
CP-14	GLK 07-06-2004	MM 07-07-2004		THIS DRAWING REVISED TO INCORPORATE DESIGN CHANGE FDA 2000-003261-02-00 PER SK-0018-00-003261-02-00.

NOTES:

1. TAG NUMBERS:
   GRAB SAMPLE HOOD ASSEMBLY CP1-PSMEPS-01 ,
   SAMPLE CONDITIONING RACK CP1-PSMEPS-02 ,
   STEAM GENERATOR BLOWDOWN SAMPLE PANEL. CP1-PSMEPS-03 .
2. RADIATION MONITOR LOCATED REMOTELY OUTSIDE SAMPLE ROOM.
3. FOR MECHANICAL SYMBOLS AND NOTES SEE DRAWING M1-0200.
4. ⬡ INDICATE EQUIPMENT NOZZLE CONNECTIONS IN ACCORDANCE WITH WATER EQUIPMENT INC DWG 58696, 58697, AND 58698.
5. PARALLEL SAMPLE COOLERS PRESURE REDUCERS, AND REGULATOR ARE PROVIDED TO ASSURE ADEQUATE SAMPLE PURGE RATES.
6. PARALLEL PRESSURE REGULATORS AND RELATED HARDWARE WERE ADDED TO ASSURE ADEQUATE SAMPLE PURGE RATES.
7. ALL pH AND CONDUCTIVITY HAVE AUTOMATIC TEMPERATURE COMPENSATION.
8. TUBING IN RACK 3/8 "- .065 WALL - 316 SS
   TUBING IN BLOWDOWN SAMPLE PANEL AND GRAB SAMPLE HOOD IS 3/8 " OR 1/4 "- .065 WALL -316 SS TO PRESSURE REDUCING VALVES; 3/8 " - .049 WALL - 316 SS TO FLOW METERS FOR ANALYZERS AND GRAB SAMPLE VALVES; 1/4 "- .049. ALL 316 SS TO ANALYZERS AND GRAB SAMPLE VALVES; ALL PER ASTM-A-213.
9. RECORDER CHART SPEED - 2 INCHES PER HOUR.
10. SAMPLE DELAY TIME OF 60 SECONDS INSIDE MISSILE BARRIER (IMB) REQUIRED FOR N-16 DECAY.
11. SAFETY CLASS 2 TUBING MATERIAL:
    SA213, TYPE 316 TUBING
    3/8 OD x 0.049 WALL
    DESIGN PRESS 2485 PSIG
    DESIGN TEMP 650°
12. * MOUNTED LOCALLY OFF PANEL.
13. VALVE LOCATED AT GRAB SAMPLE SINK.
14. 1-AE-4238 IS MOUNTED ON THE WALL.

FSAR FIGURE 9.3-4

THIS DRAWING CREATED ELECTRONICALLY

DRAWING M1-0228-B REV CP-5
HAS BEEN SPLIT INTO THE FOLLOWING SHEETS:
M1-0228-B
M1-0228-C

DRAWING M1-0228 REV CP-7
HAS BEEN SPLIT INTO THE FOLLOWING SHEETS:
M1-0228
M1-0228-A
M1-0228-B

CLASS II

LUMINANT
CPSES
GLEN ROSE, TEXAS

FLOW DIAGRAM
PROCESS SAMPLING
SYSTEM

DWG. NO.	SH. NO.	REV.
M1-0228	B	CP-14

FINAL PRINT

REF CKD 3-26-98 CP-12

me573200.dgn A M1-0228-B

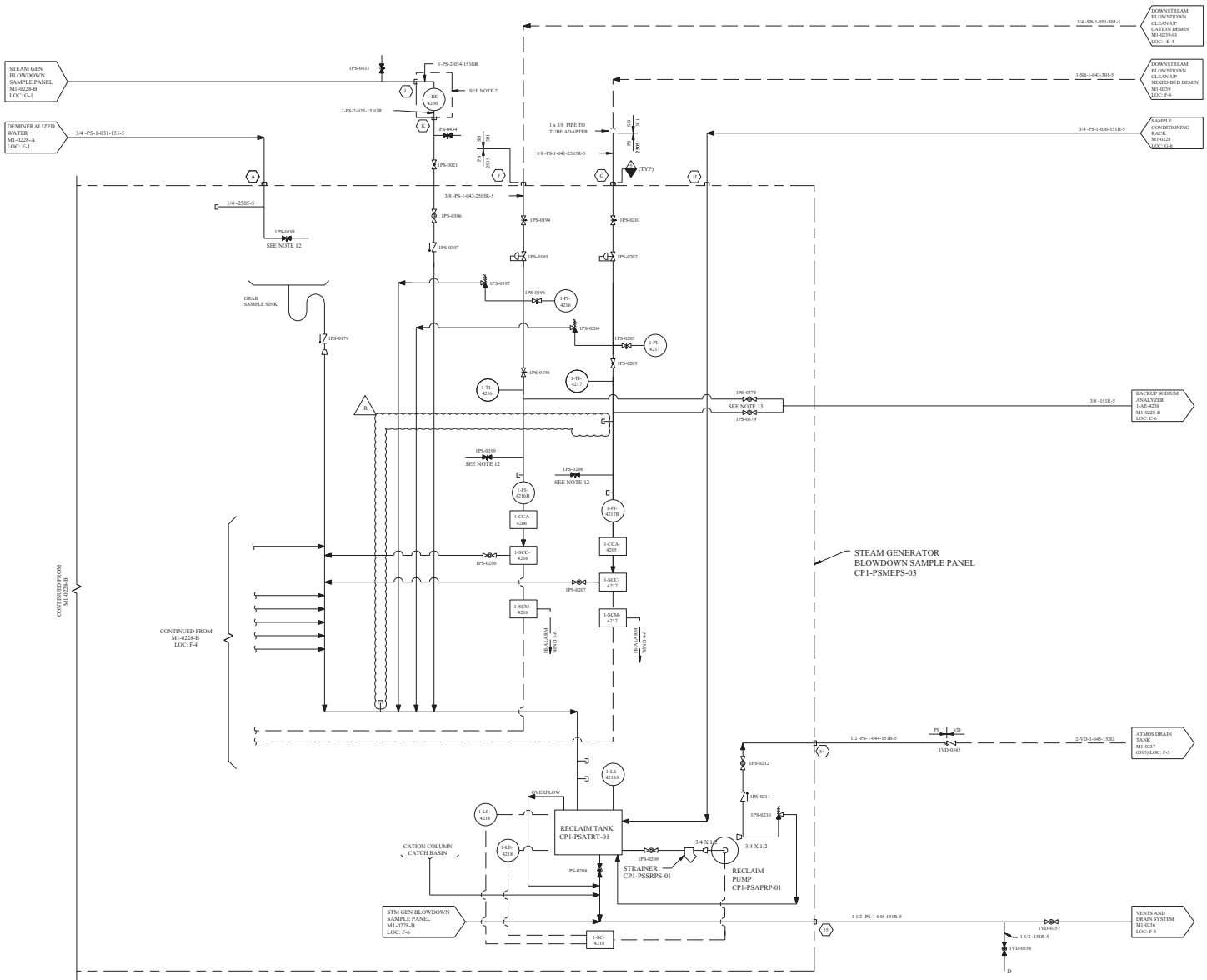

REV	DWN	CHKD	APVD	REMARKS
CP-10	RLK 04-27-2005	HDE 04-28-2005		THIS DRAWING REVISED TO INCORPORATE DESIGN CHANGE EDA 1999-002673-01-00 PER SK-0045-99-002473-01-00.

NOTES:

1. TAG NUMBERS:
   GRAB SAMPLE HOOD ASSEMBLY CP1-PSMEPS-01
   SAMPLE CONDITIONING RACK CP1-PSMEPS-02
   STEAM GENERATOR BLOWDOWN SAMPLE PANEL CP1-PSMEPS-03
2. RADIATION MONITOR LOCATED REMOTELY OUTSIDE SAMPLE ROOM.
3. FOR MECHANICAL SYMBOLS AND NOTES SEE DRAWING M1-0200.
4. ⬡ INDICATE EQUIPMENT NOZZLE CONNECTIONS IN ACCORDANCE WITH WATER EQUIPMENT INC DWG 59096, 58697, AND 58698.
5. PARALLEL SAMPLE COOLERS PRESURE REDUCERS, AND REGULATOR ARE PROVIDED TO ASSURE ADEQUATE SAMPLE PURGE RATES.
6. PARALLEL PRESSURE REGULATORS AND RELATED HARDWARE WERE ADDED TO ASSURE ADEQUATE SAMPLE PURGE RATES.
7. ALL pH AND CONDUCTIVITY HAVE AUTOMATIC TEMPERATURE COMPENSATION.
8. TUBING IN RACK 3/8 "-.065 WALL - 316 SS
   TUBING IN BLOWDOWN SAMPLE PANEL AND GRAB SAMPLE HOOD IS 3/8 "
   OR 1/4 "-.065 WALL -316 SS TO PRESSURE REDUCING VALVES; 3/8 "-.049
   WALL - 316 SS TO FLOW METERS FOR ANALYZERS AND GRAB SAMPLE
   VALVES; 1/4 "-.049 ALL 316 SS TO ANALYZERS AND GRAB SAMPLE
   VALVES; ALL PER ASTM-A-213.
9. DELETED
10. SAMPLE DELAY TIME OF 60 SECONDS INSIDE MISSILE BARRIER (IMB) REQUIRED FOR N-16 DECAY.
11. SAFETY CLASS 2 TUBING MATERIAL:
    SA213, TYPE 316 TUBING
    3/8 OD x 0.049 WALL
    DESIGN PRESS 2485 PSIG
    DESIGN TEMP 650°
12. VALVE TO BE LOCATED AT GRAB SAMPLE SINK.
13. EITHER 1PS-0378 OR 1PS-0379 IS NORMALLY OPEN; THE OTHER IS NORMALLY CLOSED.

FSAR FIGURE 9.3-4

THIS DRAWING CREATED ELECTRONICALLY

DRAWING M1-0228-B REV CP-5
HAS BEEN SPLIT INTO THE FOLLOWING SHEETS:
M1-0228-B
M1-0228-C

DRAWING M1-0228 REV CP-7
HAS BEEN SPLIT INTO THE FOLLOWING SHEETS:
M1-0228
M1-0228-A
M1-0228-B

CLASS II

TXU ENERGY
CPSES
GLEN ROSE, TEXAS

FLOW DIAGRAM
PROCESS SAMPLING
SYSTEM

DWG. NO.	SH. NO.	REV.
M1-0228	C	CP-10

REF CKD 7-26-94 CP-6

SSSSSSSDATSSSSS

mc449800.dgn

M1-0228-C

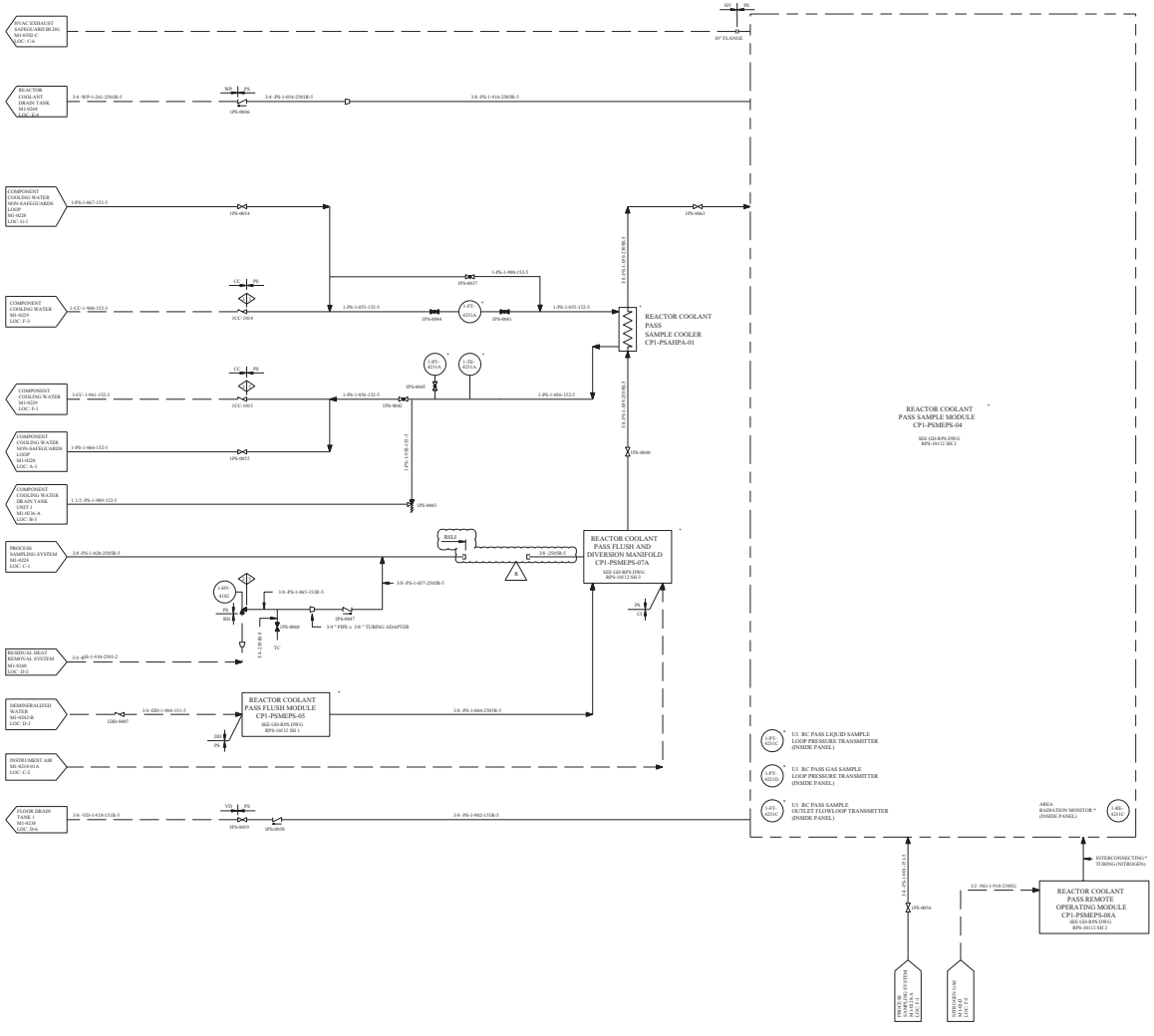

REV	DESCRIPTION	DRAWN	CHKD	APPD	REMARKS
P-00	NEW ISSUE	Rick Hall	Ron Hall		THIS DRAWING REVISED TO INCORPORATE DESIGN CHANGE TXU 2001-MD142-00 PER MCR02-CE-MD142-01-00. EDITORIAL CHANGE AS NOTED.

NOTES:

1. THE INTERNAL DETAILS OF THE POST-ACCIDENT SAMPLE SYSTEM ARE SHOWN ON THE GENERAL DYNAMIC REACTOR PLANT SERVICES DRAWING INDICATED.
2. ALL ASTERISKED (*) EQUIPMENT IS SUPPLIED BY GENERAL DYNAMICS - REACTOR PLANT SERVICES.
3. ALL TUBING COMPRESSION FITTINGS ON THE RC PASS SAMPLE LINES WILL BE SEAL WELDED PER WELDING SPECIFICATION SE WPS-00021. NO VENDOR EQUIPMENT IS AFFECTED. THE AFFECTED LINES ARE AS FOLLOWS:

1/8 -PS-1-620-2505R-S

1/8 -PS-1-657-2505R-S

1/8 -PS-1-659-2505R-S

1/8 -PS-1-914-2505R-S

4. FOR MECHANICAL SYMBOLS AND NOTES SEE DRAWING M1-0200.
5. UNLESS OTHERWISE NOTED ALL DRAINS TO BE COLLECTED BY LOCAL FLOOR DRAIN SYSTEM.

CLASS	I
(NUCLEAR SAFETY-RELATED)	
SAFETY CLASS 1	SEISMIC CATEGORY I
SAFETY CLASS 2	CLASS 1E
SAFETY CLASS 3	ASSOCIATED CIRCUITS

TXU ENERGY
CPSES
GLEN ROSE, TEXAS

FLOW DIAGRAM
POST-ACCIDENT
SAMPLING SYSTEM
REACTOR COOLANT

DRWG NO.	SH. NO.	REV.
M1-0228	01	CP-20

M1-0228-01

su502200.dgn

REV	DWN	CHKD	APVD	REMARKS
CP-7	LJC 05/11/1997			THIS DRAWING REVISED TO INCORPORATE EDITORIAL CHANGES AS NOTED.

NOTES:

1. FOR MECHANICAL SYMBOLS AND NOTES SEE DWG M1-0200.

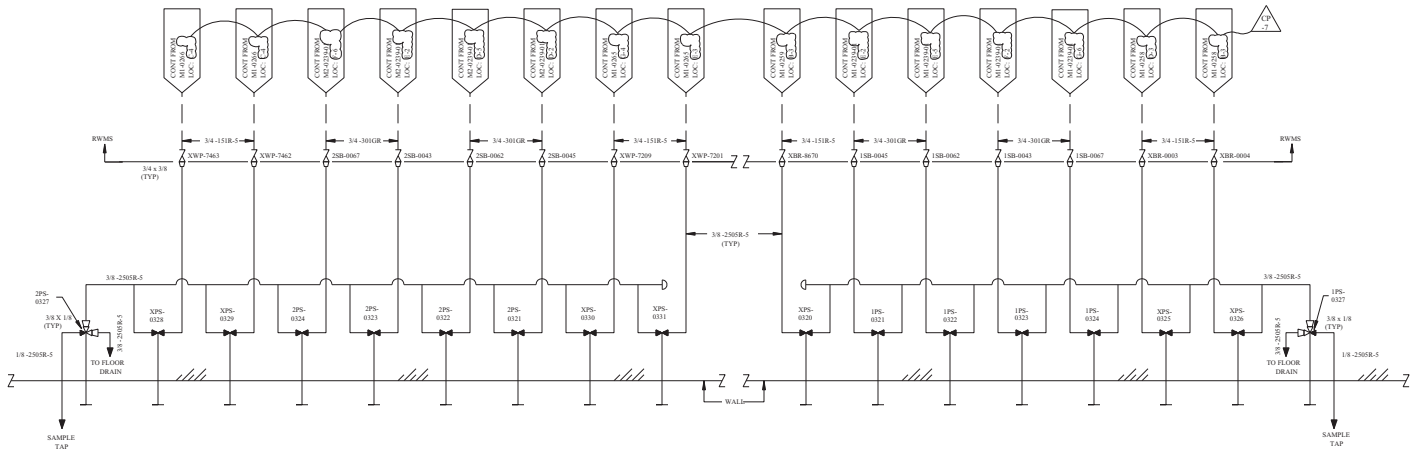

FSAR FIGURE 9.3-4

THIS DRAWING CREATED ELECTRONICALLY

CLASS II

TXU ELECTRIC
CPSES
GLEN ROSE, TEXAS

FLOW DIAGRAM
AUXILIARY BUILDING DEMINERALIZER
SAMPLING STATION

DWG. NO.	SH. NO.	REV.
M1-0228	02	CP-7

vs0000zm.dgn

$$$$$$$D:\TESSSSS

REV	DWN	CHK	APVD	REMARKS
CP-17	JRMC 03-06-2006	DJL 03-10-2006		THIS DRAWING REVISED TO INCORPORATE DESIGN CHANGE FDA 2004-000371-01-00 PER SK-0004-04-000371-01-00.

NOTES:

1. TAG NUMBERS
   GRAB SAMPLE HOOD ASSEMBLY CP2-PSMEPS-01
   SAMPLE CONDITIONING RACK CP2-PSMEPS-02
   STEAM GENERATOR BLOWDOWN SAMPLE PANEL CP2-PSMEPS-03
2. RADIATION MONITOR LOCATED REMOTELY OUTSIDE SAMPLE ROOM.
3. FOR MECHANICAL SYMBOLS AND NOTES SEE DWG M1-0200.
4. DELETED
5. ⬡ INDICATES EQUIPMENT NOZZLE CONNECTIONS IN ACCORDANCE WITH WATER EQUIPMENT INC DWG 58696, 58697 AND 58698.
6. PARALLEL SAMPLE COOLERS PRESSURE REDUCERS AND REGULATORS ARE PROVIDED TO ASSURE ADEQUATE SAMPLE PURGE RATES.
7. PARALLEL PRESSURE REGULATORS AND RELATED HARDWARE WERE ADDED TO ASSURE ADEQUATE SAMPLE PURGE RATES.
8. ALL pH AND CONDUCTIVITY HAVE AUTOMATIC TEMPERATURE COMPENSATION.
9. DELETED
10. DELETED
11. TUBING IN RACK 3/8 "-.065" WALL - 316 SS
    TUBING IN BLOWDOWN SAMPLE PANEL AND GRAB SAMPLE HOOD IS 3/8 " OR 1/4 " -.065" WALL - 316 SS TO PRESSURE REDUCING VALVES; 3/8 "-.049" WALL - 316 SS TO FLOW METERS FOR ANALYZERS AND GRAB SAMPLE VALVES; 1/4 "-.049" WALL - 316 SS TO ANALYZERS AND GRAB SAMPLE VALVES-ALL PER ASTM-A-213.
12. RECORDER CHART SPEED - 2 INCHES PER HOUR.
13. DELETED
14. DELETED
15. SAMPLE DELAY TIME OF 60 SECONDS OR GREATER IS REQUIRED FOR N-16 DECAY.
16. TUBE FITTINGS ON RC PASS TO BE SEAL WELDED PER WPS-88023.
17. TUBE-SIDE SWAGELOK FITTING TO BE SEAL WELDED.
18. SAFETY CLASS 2 TUBING MATERIAL:
    SA213, TYPE 316, TUBING
    3/8 " ODx0.049" WALL
    DESIGN PRESS 2485 PSIG
    DESIGN TEMP 650^

FSAR FIGURE 9.3-4

THIS DRAWING CREATED ELECTRONICALLY

DRAWING 2323-M2-0228	REV CP-2
HAS BEEN SPLIT INTO THE FOLLOWING SHEETS:	
M2-0228	
M2-0228-A	
M2-0228-B	
M2-0228-C	

CLASS I
(NUCLEAR SAFETY-RELATED)
SAFETY CLASS 1 — SEISMIC CATEGORY I
SAFETY CLASS 2 — CLASS 1E
SAFETY CLASS 3 — ASSOCIATED CIRCUITS

TXU POWER
CPSES
GLEN ROSE, TEXAS

FLOW DIAGRAM
PROCESS SAMPLING
SYSTEM

DWG. NO.	SH. NO.	REV.
M2-0228	-	CP-17

REF CKD 3/14/97 CP-12

me698500.dgn A M2-0228

FINAL PRINT

REV	DWN	CHKD	APVD	REMARKS
CP-15	LKK 07-23-2007	RMG 07-23-2007		THIS DRAWING REVISED TO INCORPORATE DESIGN CHANGE FDA 2007-002268-01-02 PER SK-0002-07-002268-01-02.

NOTES:

1. DELETED
2. DELETED
3. FOR MECHANICAL SYMBOLS AND NOTES SEE DWG M1-0200.
4. DELETED
5. ⬡ INDICATES EQUIPMENT NOZZLE CONNECTIONS IN ACCORDANCE WITH WATER EQUIPMENT INC DWG 58696, 58697 AND 58698.
6. DELETED
7. DELETED
8. DELETED
9. DELETED
10. DELETED
11. TUBING IN RACK 3/8 "-.065" WALL - 316 SS
    TUBING IN BLOWDOWN SAMPLE PANEL AND GRAB SAMPLE HOOD IS 3/8 " OR 1/4 " -.065" WALL - 316 SS TO PRESSURE REDUCTNG VALVES; 3/8 "-.049" WALL - 316 SS TO FLOW METERS FOR ANALYZERS AND GRAB SAMPLE VALVES; 1/4 "-.049" WALL - 316 SS TO ANALYZERS AND GRAB SAMPLE VALVES-ALL PER ASTM-A-213.
12. DELETED
13. DELETED
14. DELETED
15. DELETED
16. DELETED
17. SAMPLE BOTTLE ASSEMBLY IS STORED AT A REMOTE LOCATION BY CHEMISTRY.
18. GRAB SAMPLE QUICK DISCONNECT FITTINGS MAY BE UTILIZED FOR OTHER IN-LINE SAMPLING INSTRUMENTATION.
19. ☐ INDICATES EQUIPMENT CONNECTIONS IN ACCORDANCE WITH ORBISPHERE LABORATORIES DWG 4565-S-100.
20. THERMAL SHUTOFF VALVE BY SENTRY EQUIPMENT CORPORATION.
21. GRAB SAMPLE QUICK DISCONNECT FITTINGS MAY BE UTILIZED AT THIS LOCATION FOR ARGON INJECTION TO VOLUME CONTROL TANK REFERENCE M2-0243-02 (C-5).

FSAR FIGURE 9.3-4

THIS DRAWING CREATED ELECTRONICALLY

DRAWING 2323-M2-0228 REV CP-2
HAS BEEN SPLIT INTO THE FOLLOWING SHEETS:

M2-0228
M2-0228-A
M2-0228-B
M2-0228-C

CLASS I
(NUCLEAR SAFETY-RELATED)
SAFETY CLASS 1 SEISMIC CATEGORY I
SAFETY CLASS 2 CLASS 1E
SAFETY CLASS 3 ASSOCIATED CIRCUITS

LUMINANT
CPSES
GLEN ROSE, TEXAS

FLOW DIAGRAM
PROCESS SAMPLING
SYSTEM

DWG. NO.	SH. NO.	REV.
M2-0228	A	CP-15

REF CHKD 11/06/2002

me0006gf.dgn A M2-0228-A B C D E F G FINAL PRINT H

REV	DWN	CHK	APVD	REMARKS
CP-11	GLK 07-06-2004	MM 07-07-2004		THIS DRAWING REVISED TO INCORPORATE DESIGN CHANGE FDA 2000-003261-02-00 PER SK-0019-00-003261-02-00.

NOTES:

1. TAG NUMBERS:
   GRAB SAMPLE HOOD ASSEMBLY CP2-PSMEPS-01
   SAMPLE CONDITIONING RACK CP2-PSMEPS-02
   STEAM GENERATOR BLOWDOWN SAMPLE PANEL CP2-PSMEPS-03
2. RADIATION MONITOR LOCATED REMOTELY OUTSIDE SAMPLE ROOM.
3. **FOR MECHANICAL SYMBOLS AND NOTES SEE DWG M1-0200.**
4. * MOUNTED LOCALLY OFF PANEL
5. ⬡ **INDICATES EQUIPMENT NOZZLE CONNECTIONS IN ACCORDANCE WITH** WATER EQUIPMENT INC DWG 58696, 58697 AND 58698.
6. PARALLEL SAMPLE COOLERS PRESSURE REDUCERS AND REGULATORS ARE PROVIDED TO ASSURE ADEQUATE SAMPLE FLOW.
7. PARALLEL PRESSURE REGULATORS AND RELATED HARDWARE WERE ADDED TO ASSURE ADEQUATE SAMPLE PURGE RATES.
8. ALL pH AND CONDUCTIVITY HAVE AUTOMATIC TEMPERATURE COMPENSATION.
9. DELETED
10. DELETED
11. TUBING IN RACK 3/8 "-.065" WALL - 316 SS
    TUBING IN BLOWDOWN SAMPLE PANEL AND GRAB SAMPLE HOOD IS 3/8 " OR 1/4 " -.065" WALL - 316 SS TO PRESSURE REDUCING VALVES; 3/8 "-.049" WALL - 316 SS TO FLOW METERS FOR ANALYZERS AND GRAB SAMPLE VALVES; 1/4 "-.049" WALL - 316 SS TO ANALYZERS AND GRAB SAMPLE VALVES-ALL PER ASTM-A-213.
12. **RECORDER CHART SPEED - 2 INCHES PER HOUR.**
13. VALVE LOCATED AT GRAB SAMPLE SINK.
14. **DELETED**
15. SAMPLE DELAY TIME OF 60 SECONDS OR GREATER IS REQUIRED FOR N-16 DECAY.
16. TUBE FITTINGS ON RC PASS TO BE SEAL WELDED PER WPS-88023.
17. 2-AE-4238 MOUNTED ON WALL.

FSAR FIGURE 9.3-4

THIS DRAWING CREATED ELECTRONICALLY

DRAWING 2323-M2-0228 REV CP-2
HAS BEEN SPLIT INTO THE FOLLOWING SHEETS:
M2-0228
M2-0228-A
M2-0228-B
M2-0228-C

CLASS II

LUMINANT
CPSES
GLEN ROSE, TEXAS

FLOW DIAGRAM
PROCESS SAMPLING
SYSTEM

DWG. NO.	SH. NO.	REV.
M2-0228	B	CP-11

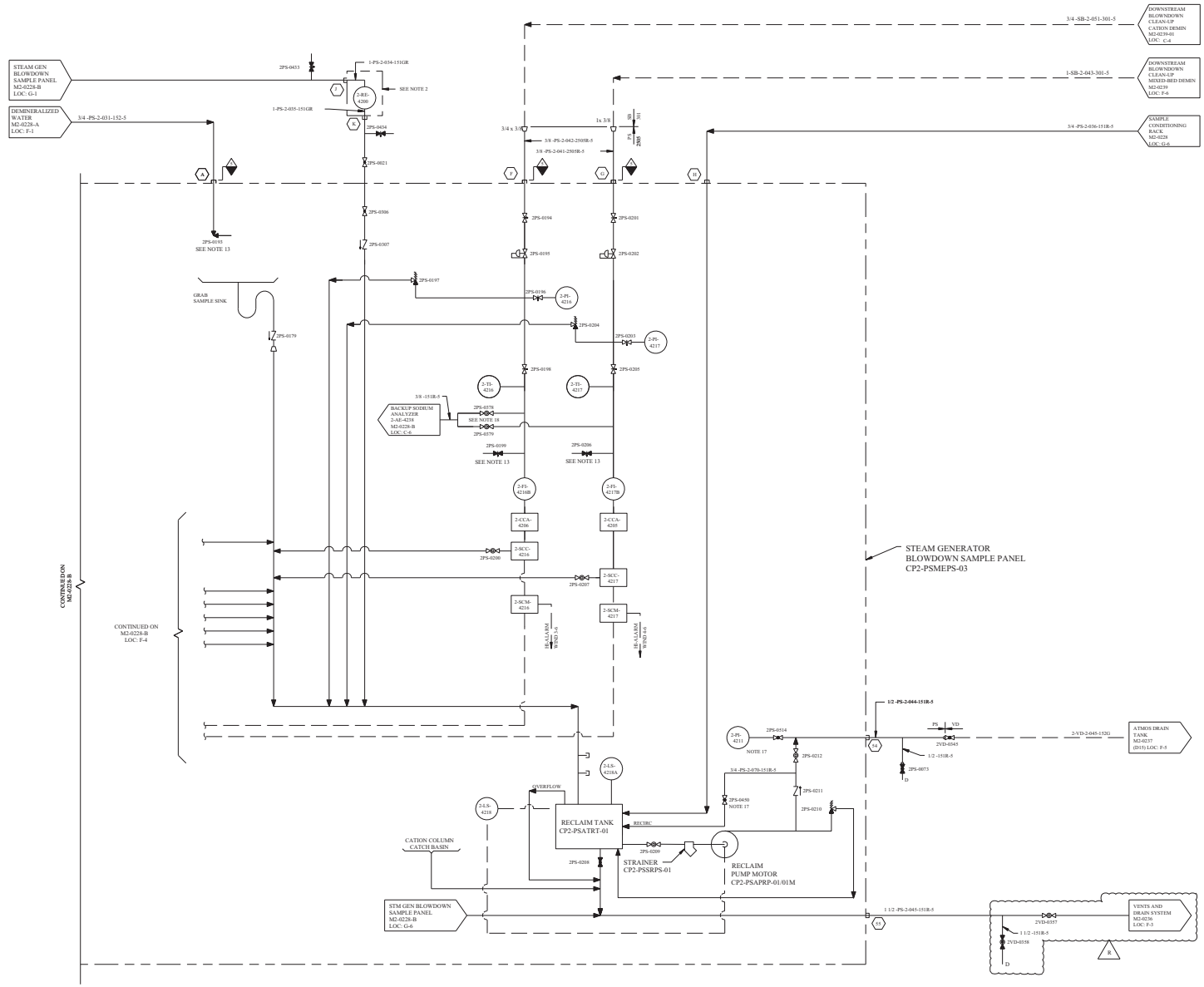

REV	DWN	CHKD	APVD	REMARKS
2P/9	HOK 10/15/2001	HHS 10/15/2001		THIS DRAWING REVISED TO INCORPORATE DESIGN CHANGE FDA 1999-008214-01-00 FSE SK-0002-99-008214-01-00.

NOTES:

1. TAG NUMBERS
   GRAB SAMPLE HOOD ASSEMBLY CP2-PSMEPS-01
   SAMPLE CONDITIONING RACK CP2-PSMEPS-02
   STEAM GENERATOR BLOWDOWN SAMPLE PANEL CP2-PSMEPS-03
2. RADIATION MONITOR LOCATED REMOTELY OUTSIDE SAMPLE ROOM.
3. FOR MECHANICAL SYMBOLS AND NOTES SEE DWG M1-0200.
4. DELETED
5. ◯ INDICATES EQUIPMENT NOZZLE CONNECTIONS IN ACCORDANCE WITH WATER EQUIPMENT INC DWG 59696, 59697 AND 59698.
6. PARALLEL SAMPLE COOLERS PRESSURE REDUCERS AND REGULATORS ARE PROVIDED TO ASSURE ADEQUATE SAMPLE FLOW.
7. PARALLEL PRESSURE REGULATORS AND RELATED HARDWARE WERE ADDED TO ASSURE ADEQUATE PURGE RATES.
8. ALL pH AND CONDUCTIVITY HAVE AUTOMATIC TEMPERATURE COMPENSATION.
9. DELETED
10. DELETED
11. TUBING IN RACK 3/8 "-.065" WALL - 316 SS
    TUBING IN BLOWDOWN SAMPLE PANEL AND GRAB SAMPLE HOOD IS 3/8 " OR 1/4 " -.065" WALL - 316 SS TO PRESSURE REDUCING VALVES;
    3/8 "-.049" WALL - 316 SS TO FLOW METERS FOR ANALYZERS AND GRAB SAMPLE VALVES; 1/4 "-.049" WALL - 316 SS TO ANALYZERS AND GRAB SAMPLE VALVES-ALL PER ASTM-A-213.
12. RECORDER CHART SPEED - 2 INCHES PER HOUR.
13. VALVE TO BE LOCATED AT GRAB SAMPLE SINK.
14. DELETED
15. SAMPLE DELAY TIME OF 60 SECONDS OR GREATER IS REQUIRED FOR N-16 DECAY.
16. TUBE FITTINGS ON RC PASS TO BE SEAL WELDED PER WPS-89023.
17. THROTTLE RECIRC VALVE, 2PS-0450 , TO OBTAIN A PRESSURE BETWEEN 60 PSIG (MIN). AND 80 PSIG (MAX). AT 2-PI-4211 FOR PROPER FLOW RATE FROM RECLAIM TANK.
18. EITHER 2PS-0378 OR 2PS-0379 IS NORMALLY OPEN; THE OTHER ONE IS NORMALLY CLOSED.

FSAR FIGURE 9.3-4

THIS DRAWING CREATED ELECTRONICALLY

DRAWING 2323-M2-0228 REV CP-2
HAS BEEN SPLIT INTO THE FOLLOWING SHEETS:

M2-0228
M2-0228-A
M2-0228-B
M2-0228-C

CLASS II

TXU ELECTRIC
CPSES
GLEN ROSE, TEXAS

FLOW DIAGRAM
PROCESS SAMPLING
SYSTEM

DWG. NO.	SH. NO.	REV.
M2-0228	C	CP-9

$$$$DATE$$$$

mc346100.dgn M2-0228-C

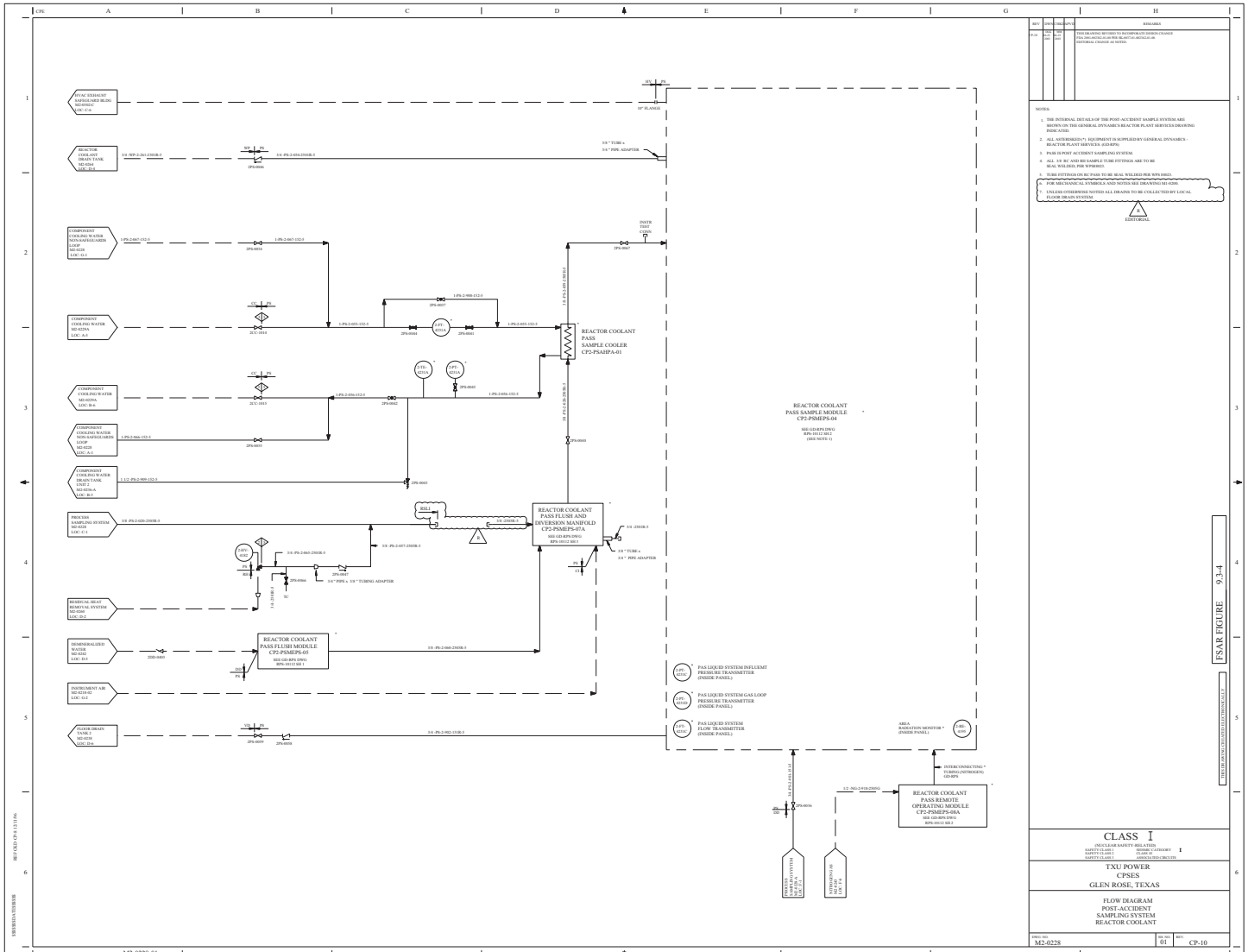

REV.	DESCRIPTION			REMARKS
	ORIG.	CHK.	APP.	
CP-10				THIS DRAWING REVISED TO INCORPORATE DESIGN CHANGE TXX-TRM-CP-0228-00-00-00-CP-10 (ECN 21-46) HISTORICAL CHANGE AS NOTED

NOTES:

1. THE INTERNAL DETAILS OF THE POST-ACCIDENT SAMPLE SYSTEM ARE SHOWN ON THE GENERAL DYNAMICS/REACTOR PLANT SERVICES DRAWING INDICATED.
2. ALL ASTERISKED (*) EQUIPMENT IS SUPPLIED BY GENERAL DYNAMICS - REACTOR PLANT SERVICES. (GD-RPS)
3. PASS IS POST ACCIDENT SAMPLING SYSTEM.
4. ALL 3/8 SC AND RH SAMPLE TUBE FITTINGS ARE TO BE SEAL WELDED, PER WPS0035.
5. TUBE FITTINGS ON SC PASS TO BE SEAL WELDED PER WPS 0302/1.
6. FOR MECHANICAL SYMBOLS AND NOTES SEE DRAWING M2-0200.
7. UNLESS OTHERWISE NOTED ALL DRAINS TO BE COLLECTED BY LOCAL FLOOR DRAIN SYSTEM.

EDITORIAL

FSAR FIGURE 9.3-4

THIS DRAWING INCORPORATES ECN 21-46

CLASS I

(NUCLEAR SAFETY-RELATED)

SAFETY CLASS 1		SEISMIC CATEGORY	I
SAFETY CLASS 2		CLASS 1E	
SAFETY CLASS 3		ASSOCIATED CIRCUITS	

TXU POWER
CPSES
GLEN ROSE, TEXAS

FLOW DIAGRAM
POST-ACCIDENT
SAMPLING SYSTEM
REACTOR COOLANT

DWG. NO.	DR. NO.	REV.
M2-0228	01	CP-10

M2-0228-01

mu545566.dgn

BE FUCKED UP 4 2 13 0%

MERIDIAN 5 SYSTEMS

REV	DWN	CHKD	APVD	REMARKS
CP-22	DGC 10-28 2015	GAW 10-28 2015	MHF 10-29 2015	THIS DRAWING REVISED TO INCORPORATE AI-CR-2015-010410-1 TO EDITORIALLY ADD R TO LINE NUMBER 3-WP-1-901-151-5.

NOTES:

1. DELETED
2. FOR MECHANICAL SYMBOLS AND NOTES SEE DWG M1-0200.
3. THE BOXED-IN NUMBERS DESIGNATE THE SPECIFIC ROOM NUMBERS ON THE PLUMBING DRAWING SHOWING VARIOUS DRAIN LOCATIONS.
4. FOR DRAIN SYMBOLS SEE DWG M1-0236 NOTE 4.
5. THIS SYSTEM IS NON-NUCLEAR SAFETY CLASS EXCEPT AS NOTED.
6. DELETED
7. TEST GROOVE DRAINS ARE □" SS TUBING.
8. PIPING DESIGNATED FD IS PROCURED BY SPECIFICATION MS-73. PIPING DESIGNATED VD IS PROCURED BY SPECIFICATION MS-43A AND MS-44A.
9. FOR CONDENSATE MEASURING SYSTEM SEE DWG M1-0238-0A, LOC: H-3.
10. UNLESS OTHERWISE NOTED DRAINS COLLECTED BY LOCAL DRAIN SYSTEM.
11. ISOLATION VALVE PROVIDED FOR TEMPORARY SUMP PUMP CONNECTION.
12. EQUIPMENT DRAIN IS COVERED WITH REMOVABLE CAP.

FSAR FIGURE 9.3-5

THIS DRAWING CREATED ELECTRONICALLY

DRAWING 2323-M1-0238	REV CP-5
HAS BEEN SPLIT INTO THE FOLLOWING SHEETS:	
M1-0238	
M1-0238-A	

CLASS I
(NUCLEAR SAFETY-RELATED)
SAFETY CLASS 1 — SEISMIC CATEGORY I
SAFETY CLASS 2 — CLASS 1E
SAFETY CLASS 3 — ASSOCIATED CIRCUITS

LUMINANT
CPNPP
GLEN ROSE, TEXAS

FLOW DIAGRAM
VENTS AND DRAINS SYSTEM
CONTAINMENT BUILDING

DWG. NO.	SH. NO.	REV.
M1-0238	-	CP-22

$$$$$$$DATE$$$$$$ REF CHKD 11/03/2003

me848500.dgn | A M1-0238 | B | C | D | E | F | G | < FINAL PRINT > | H

REV	DWN	CHKD	APVD	REMARKS
CP-12	DLK 07-11 2005	MM 07-12 2005		THIS DRAWING REVISED TO INCORPORATE DESIGN CHANGE FDA 2005-002581-01-00 PER SK-0004-05-002581-01-00.

NOTES:
1. DELETED R
2. FOR MECHANICAL SYMBOLS AND NOTES SEE DWG M1-0200.
3. THE BOXED-IN NUMBERS DESIGNATE THE SPECIFIC ROOM NUMBERS ON THE PLUMBING DRAWING SHOWING VARIOUS DRAIN LOCATIONS.
4. FOR DRAIN SYMBOLS SEE DWG M1-0236 NOTE 4.
5. THIS SYSTEM IS NON-NUCLEAR SAFETY CLASS EXCEPT AS NOTED.
6. TEST GROOVE DRAINS ARE 3/4 " S.S. TUBING.
7. PIPING DESIGNATED "FD" IS PROCURED BY SPECIFICATION MS-73. PIPING DESIGNATED "VD" IS PROCURED BY SPECIFICATION MS-43A AND MS-44A.
8. UNLESS OTHERWISE NOTED DRAINS COLLECTED BY LOCAL DRAIN SYSTEM.
9. ISOLATION VALVE PROVIDED FOR TEMPORARY SUMP PUMP CONNECTION.

R

CONTAINMENT COOLING UNITS CONDENSATE MEASURING SYSTEM
(2 PER CONTAINMENT)

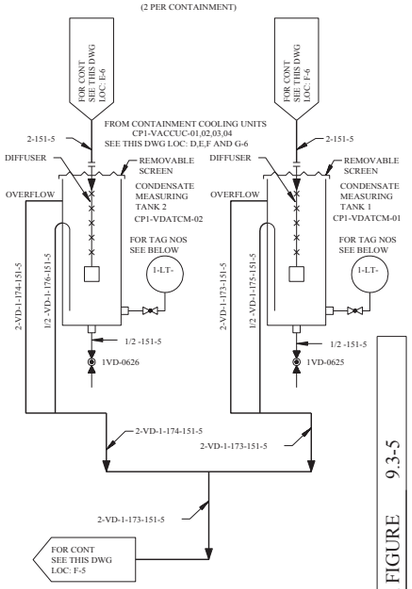

LEVEL TRANSMITTER AND BLOCK VALVE TAG NOS

CONDENSATE MEASURING TANK	FLOOR EL	1-LT-	1VD-
CP1-VDATCM-02	860'-0"	5162	0619
CP1-VDATCM-01	905'-9"	5163	0620

DRAWING 2323-M1-0238 REV CP-5
HAS BEEN SPLIT INTO THE FOLLOWING SHEETS:
- M1-0238
- M1-0238-A

FSAR FIGURE 9.3-5

THIS DRAWING CREATED ELECTRONICALLY

CLASS II

TXU POWER
CPSES
GLEN ROSE, TEXAS

FLOW DIAGRAM
VENTS AND DRAINS SYSTEM
CONTAINMENT BUILDING

DWG NO.	SH. NO.	REV.
M1-0238	A	CP-12

FL EL 916'-9"
FL EL 908'-0"
FL EL 905'-9"
FL EL 894'-9"
FL EL 885'-6"
FL EL 873'-0"
FL EL 871'-6"
FL EL 861'-6"
FL EL 860'-0"
FL EL 853'-6"
FL EL 851'-6"
FL EL 849'-6"
FL EL 842'-0"
FL EL 832'-6"
FL EL 828'-0"
FL EL 822'-9"
FL EL 819'-6"
FL EL 812'-0"
FL EL 808'-0"

PRESSURIZER ROOF
PRESSURIZER ROOM
PRESSURIZER RELIEF TK RM
ACCUMULATOR
INSTRUMENT RACK
SEAL TABLE ROOM
REGENERATIVE HEAT EXCH
VALVE ROOM
CONTAINMENT CCW DRAIN TANK
INSTRUMENT RACK SEE NOTE 10
EXCESS LETDOWN HX ROOM
REACTOR COOLANT PUMP SEAL LEAKOFF
REACTOR COOLANT DRAIN TANK
REACTOR COOLANT DRAIN TANK HEAT EXCHANGER
GENERATOR STEAM LOOP 1 2-VD-2-929-1302-5
STEAM GENERATOR LOOP 4 2-VD-2-932-1302-5

4-FD-2-060-150GR
4-FD-2-059-150GR
2-150GR FROM CRANE RAILS
2-150GR FROM CRANE RAIL
4-FD-2-022-150GR
4-FD-2-002-150GR
4-FD-2-005-150GR
PENETRATION AREA
4-FD-2-062-150GR
4-FD-2-063-150GR
4" FCO
4-FD-2-067-150GR
4-FD-2-068-150GR
4-FD-2-066-150GR
4-FD-2-038-150GR
2-150GR FROM CRANE RAIL DRAINS AND LIGHTING PIT
4x2
4-FD-2-382-150R-5
2-150GR FROM CRANE RAIL AND LIGHTING PIT DRAINS
4-FD-2-387-150GR
4-FD-2-050-150GR
4-FD-2-070-150GR
4-FD-2-071-150GR
4-FD-2-004-150GR
4-FD-2-245-150GR
1-FD-2-252-150G
1-FD-2-254-150G
1-FD-2-251-150G
1-FD-2-253-150G
4-FD-2-257-150GR
4-FD-2-052-150R-5
4-FD-2-051-150R-5
4-FD-2-383-150GR
4-FD-2-053-150GR
4-FD-2-078-150GR
4-FD-2-269-150GR
4-FD-2-237-150GR
4-FD-2-238-150GR
4-FD-2-075-150GR
4-FD-2-076-150GR
4-FD-2-065-150GR
4-FD-2-385-150R-5
RISER 5
4-FD-2-045-150GR
4-FD-2-255-150R-5
RISER 6
4-FD-2-062-150GR
RISER 1
4-FD-2-001-150GR
4-FD-2-080-150GR
RISER 7
4-FD-2-219-150GR
4-FD-2-053-151R-5
VENTS AND DRAINS SYSTEM CONT BLDG M2-0238-A LOC: A-4
3-VD-2-141-151R-5
1-151R-5
2VD-0613
2VD-0627 (NOTE 9)
2VD-0612
2-VD-2-058-151R-5
2-VD-2-057-151R-5
3/4 -151R-5
2VD-0615
2VD-0614
RC'S PRT M2-0251 LOC: I-4
1-RC-2-941-151R-5
2-LS-5142-2
CP2-VDSRCS-01
CP2-VDSRCS-02
2VD-0868
2VD-0869
2-HS-5143
2-HS-5144
3-VD-2-903-151R-5
2-LT-5160
2-LS-5142-3
2-LS-5142-1
3-VD-2-902-151R-5
2RC-8154 LO
2RC-8157
3/8 -2505R-5
1/2 -2505R-5
1/2 -151R-5
4-FD-2-009-150GR
4-FD-2-236-150GR
4-FD-2-087-150GR
4-FD-2-208-150GR
4-FD-2-207-150GR
4-FD-2-206-150GR
4-FD-2-077-150GR
4-FD-2-081-150GR
4-FD-2-006-150GR
4-FD-2-048-150GR
4-FD-2-055-150GR
4-FD-2-046-150GR
4-FD-2-036-150GR
4-FD-2-058-150GR
4-FD-2-045-150GR
CONTAINMENT SUMP 1
CP2-WPAPCS-01
CP2-WPAPCS-02
CP2-FDSPCB-01
4-VD-2-053-151R-5
3-VD-2-148-151R-5
WASTE PROCESSING RELIEF VLV DISCHARGE (2-7160) M2-0264 LOC: C-3
2-VD-2-147-151R-5
REACTOR COOLANT DR TK M2-0264 LOC: A-3
3-VD-2-146-151R-5
WASTE PROCESSING RELIEF VLV DISCHARGE (2-7169) M2-0264 LOC: A-4
1-VD-2-144-151R-5
REFUELING CAV SKIMMER STRAINER M2-0235 LOC: G-4
4-VD-2-049-151R-5
FLOOR DRAIN TANK 2 M1-0266 LOC: G-1
3-VD-2-145-151R-5
RC PASS SAMPLE MODULE DRAIN M2-0228-01 LOC: A-5
2-HV-5158
2-HV-5157
2VD-0616
2VD-0618
2VD-0895
2VD-0896
2VD-0606
2VD-0607
2VD-0617
2VD-0633
2VD-0600
2VD-0601
2-FT-5159
2-FE-5159
2PS-0059 (REF)
PS
VD
1-151R-5
1/2 -151GR
3/4 -151GR
3/4 -151R-2
3/4 -151-5
3/4 -151R-5
3/4 -VD-2-925-151R-2
3/4 -VD-2-922-151R-5
4-VD-2-060-151R-2
4-VD-2-049-151R-5
4-WP-2-061-151R-5
4-VD-2-059-151R-5
PENET M III-0021
TO 77 FLOOR DRAIN
FC
LC
TC
INSIDE CONTAINMENT
OUTSIDE CONTAINMENT
WASTE HOLD-UP TANK M1-0265 LOC: A-1
VD WP

REV	DWN	CHK	APVD	REMARKS
CP-14	DLK 08-17 2009	MM 08-17 2009		THIS DRAWING REVISED TO INCORPORATE DESIGN CHANGE FDA 2009-001707-01-00 PER SK-0008-09-001707-01-00.

NOTES:

1. FOR MECHANICAL SYMBOLS AND NOTES SEE DWG M1-0200.
2. THE BOXED-IN NUMBERS DESIGNATE THE SPECIFIC ROOM NUMBERS ON THE PLUMBING DRAWING SHOWING VARIOUS DRAIN LOCATIONS.
3. DRAIN SYMBOLS ARE AS FOLLOWS:
   - FLOOR DRAIN WITHOUT BACKWATER VALVE.
   - FLOOR DRAIN WITH BACKWATER VALVE (SEE NOTE 8 AND 11).
   - EQUIPMENT DRAIN WITHOUT BACKWATER VALVE.
   - EQUIPMENT DRAIN WITH BACKWATER VALVE. (SEE NOTE 8 AND 11)
   - CRANE RAIL DRAIN
   - LIGHTING PIT DRAIN
4. THIS SYSTEM IS NON-NUCLEAR SAFETY CLASS EXCEPT AS NOTED.
5. TEST GROVE DRAINS ARE 3/4 " SS TUBING.
6. PIPING DESIGNATED "FD" IS PROCURED BY SPECIFICATION MS-73. PIPING DESIGNATED "VD" IS PROCURED BY SPECIFICATION MS-43A AND MS-44A.
7. UNLESS OTHERWISE NOTED DRAINS COLLECTED BY LOCAL DRAIN SYSTEM.
8. UNLESS OTHERWISE NOTED, EQUIPMENT TAG NUMBERS FOR BACKWATER VALVES SHOULD CORRESPOND TO THE UNIT IN WHICH THEY ARE INSTALLED AND THE NUMBER OF THE PIPE IN WHICH IT IS INSTALLED, THAT IS, THE BACKWATER VALVE IN LINE NUMBER 6-FD-2-454-010-5 SHOULD BE **2FD-0454.**
9. ISOLATION VALVE PROVIDED FOR TEMPORARY SUMP PUMP CONNECTION.
10. EQUIPMENT DRAIN IS COVERED WITH REMOVABLE CAP.
11. FOR LOCATION OF BACKWATER VALVES AT FLOOR ELEVATIONS 773' AND 785' SEE DCN 7245 REV 0.

R

DRAWING 2323-M2-0238 REV CP-2
HAS BEEN SPLIT INTO THE FOLLOWING SHEETS:
M2-0238
M2-0238-A

FSAR FIGURE 9.3-5

THIS DRAWING CREATED ELECTRONICALLY

CLASS I
(NUCLEAR SAFETY-RELATED)
SAFETY CLASS 1 — SEISMIC CATEGORY I
SAFETY CLASS 2 — CLASS 1E
SAFETY CLASS 3 — ASSOCIATED CIRCUITS

LUMINANT
CPNPP
GLEN ROSE, TEXAS

FLOW DIAGRAM
VENTS AND DRAINS SYSTEM
CONTAINMENT BUILDING

DWG. NO. M2-0238 | SH. NO. - | REV. CP-14

REF CKD CP-8 10/27/97

SSSSSSDATESSSSSS

FL EL 916'-9"
FL EL 905'-9"
FL EL 894'-9"
FL EL 885'-6"
FL EL 873'-0"
FL EL 871'-6"
FL EL 861'-6"
FL EL 860'-0"
FL EL 853'-6"
FL EL 851'-6"
FL EL 849'-6"
FL EL 842'-0"
FL EL 832'-6"
FL EL 828'-0"
FL EL 822'-9"
FL EL 812'-0"
FL EL 808'-0"
FL EL 783'-7"

4-FD-2-019-150GR
4-FD-2-020-150GR
2-150GR
4-FD-2-032-150GR
2-150GR FROM CRANE RAILS
REACTOR HEAD LAYDOWN AREA
4-FD-2-010-150GR
4-FD-2-930-150GR
4-FD-2-027-150GR
4-FD-2-026-150GR
2-150GR FROM CRANE RAIL AND LIGHTING PIT DRAINS
4-FD-2-012-150GR
2-150GR FROM LIGHTING PIT DRAINS
4-FD-2-037-150R-5
ACCUMULATOR
INSTRUMENT RACK
HVAC FILTER UNIT
4-FD-2-013-150GR
4-FD-2-239-150GR
4-FD-2-029-150R-5
4-FD-2-241-150R-5
4-FD-2-242-150R-5
4-FD-2-244-150R-5
4-FD-2-243-150R-5
4-FD-2-030-150R-5
4-FD-2-025-150R-5
4" CO
4-FD-2-040-150R-5
4-FD-2-240-150R-5
4-FD-2-039-150GR
REACTOR COOLANT PUMP SEAL LEAKOFF
RISER 2
4-FD-2-011-150GR
4-FD-2-084-150R-5
RISER 3
4-FD-2-018-150GR
RISER 4
4-FD-2-031-150GR
4-FD-2-232-150R-5
STEAM GENERATOR LOOP 3
2-VD-2-931-1302-5
STEAM GENERATOR LOOP 2
2-VD-2-930-1302-5
VENTS AND DRAINS SYSTEM CONT BLDG M2-0238 LOC: G-5
4-VD-2-053-151R-5
3-VD-2-052-151R-5
1-151R-5
2VD-0605
2VD-0628 (NOTE 10)
2-VD-2-051-151R-5
2-VD-2-050-151R-5
2VD-0604
2VD-0603
2VD-0602
2-LS-5152-3
CP2-VDSRCS-03
CP2-VDSRCS-04
2-VD-2-173-151-5
FOR CONT SEE THIS DWG LOC: G-5
TEST GROOVE DRAINS FROM REFUELING CANAL
1 TO 22
DRIP PAN
3/4 -FD-2-250-2505R-5
3-VD-2-056-151R-5
4-FD-2-017-150GR
4-FD-2-044-150GR
2-LT-5161
2-LS-5152-1
2VD-0870
2-HS-5154
2VD-0871
2-HS-5153
2-LS-5152-2
3-VD-2-900-151R-5
NEUTRON DETECTOR WELL COOLING UNITS
4" FCO
4-FD-2-014-150R-5
4-FD-2-047-150GR
4-FD-2-016-150GR
4-FD-2-015-150GR
4-FD-2-085-150GR
4-FD-2-220-150GR
4-FD-2-086-150GR
4-FD-2-024-150GR
4-FD-2-043-150GR
4-FD-2-042-150GR
CP2-WPAPCS-03
CP2-WPAPCS-04
CONTAINMENT SUMP 2 CP2-FDSPCB-02
2-VD-2-055-151R-5
2-VD-2-054-151R-5
2VD-0610
2VD-0611
2VD-0609
2VD-0608
3-VD-2-905-151R-5
3-VD-2-904-151R-5
CP2-VDSRRS-01
CP2-VDSRRS-02
2VD-0876
2VD-0877
2-HS-5148
2-HS-5149
2-LT-5164
2-LS-5147
3/8 -2505R-5
1/2 -2505R-5
1/2 -151R-5
CP2-WPAPRS-01
CP2-WPAPRS-02
REACTOR CAVITY SUMP CP2-FDSPRC-01
CP2-VACCUC-04
CP2-VACCUC-03
CP2-VACCUC-02
CP2-VACCUC-01
2-151-5
FOR CONT SEE THIS DWG LOC: H-3
FOR CONT SEE THIS DWG LOC: G-3
CONTAINMENT COOLING COIL UNITS
EL 860'-0"
CONTAINMENT COOLING COIL UNITS
EL 905'-0"

REV	DWN	CHKD	APVD	REMARKS
CP-12	JRMC 08-27-2007	BHB 08-27-2007		THIS DRAWING REVISED TO INCORPORATE DESIGN CHANGE FDA-2005-001856-01-00 PER SK-0001-05-001856-01-00.

NOTES

1. FOR MECHANICAL SYMBOLS AND NOTES SEE DWG M1-0200.
2. THE BOXED-IN NUMBERS DESIGNATE THE SPECIFIC ROOM NUMBERS ON THE PLUMBING DRAWING SHOWING VARIOUS DRAIN LOCATIONS.
3. FOR TYPICAL DRAIN SYMBOLS SEE DWG M2-0238 NOTE 3.
4. THIS SYSTEM IS NON-NUCLEAR SAFETY CLASS EXCEPT AS NOTED.
5. TEST GROVE DRAINS ARE 3/4 " SS TUBING.
6. PIPING DESIGNATED "FD" IS PROCURED BY SPECIFICATION MS-73. PIPING DESIGNATED "VD" IS PROCURED BY SPECIFICATION MS-43A AND MS-44A
7. DELETED
8. UNLESS OTHERWISE NOTED, DRAINS COLLECTED BY LOCAL DRAIN SYSTEM.
9. FOR CONDENSATE MEASURING TANK DIFFUSER DETAILS SEE DCA 20715 REV 1.
10. ISOLATION VALVE PROVIDED FOR TEMPORARY SUMP PUMP CONNECTION.

CONTAINMENT COOLING UNITS CONDENSATE MEASURING SYSTEM

(2 PER CONTAINMENT)

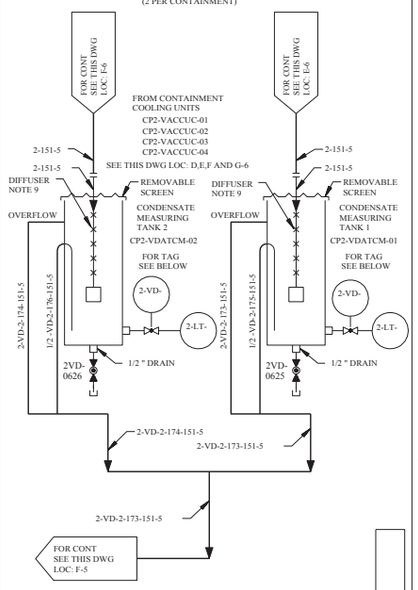

LEVEL TRANS TAG NUMBERS

CONDENSATE MEASURING TANK		TAG NUMBERS	
CP2-VDATCM-02		2-LT-5163	2VD-0619
CP2-VDATCM-01		2-LT-5162	2VD-0620

DRAWING 2323-M2-0238 REV CP-2 HAS BEEN SPLIT INTO THE FOLLOWING SHEETS:
M2-0238
M2-0238-A

CLASS II

LUMINANT
CPSES
GLEN ROSE, TEXAS

FLOW DIAGRAM
VENTS AND DRAINS SYSTEM
CONTAINMENT BUILDING

DWG. NO.	SH. NO.	REV.
M2-0238	A	CP-12

FSAR FIGURE 9.3-5

THIS DRAWING CREATED ELECTRONICALLY

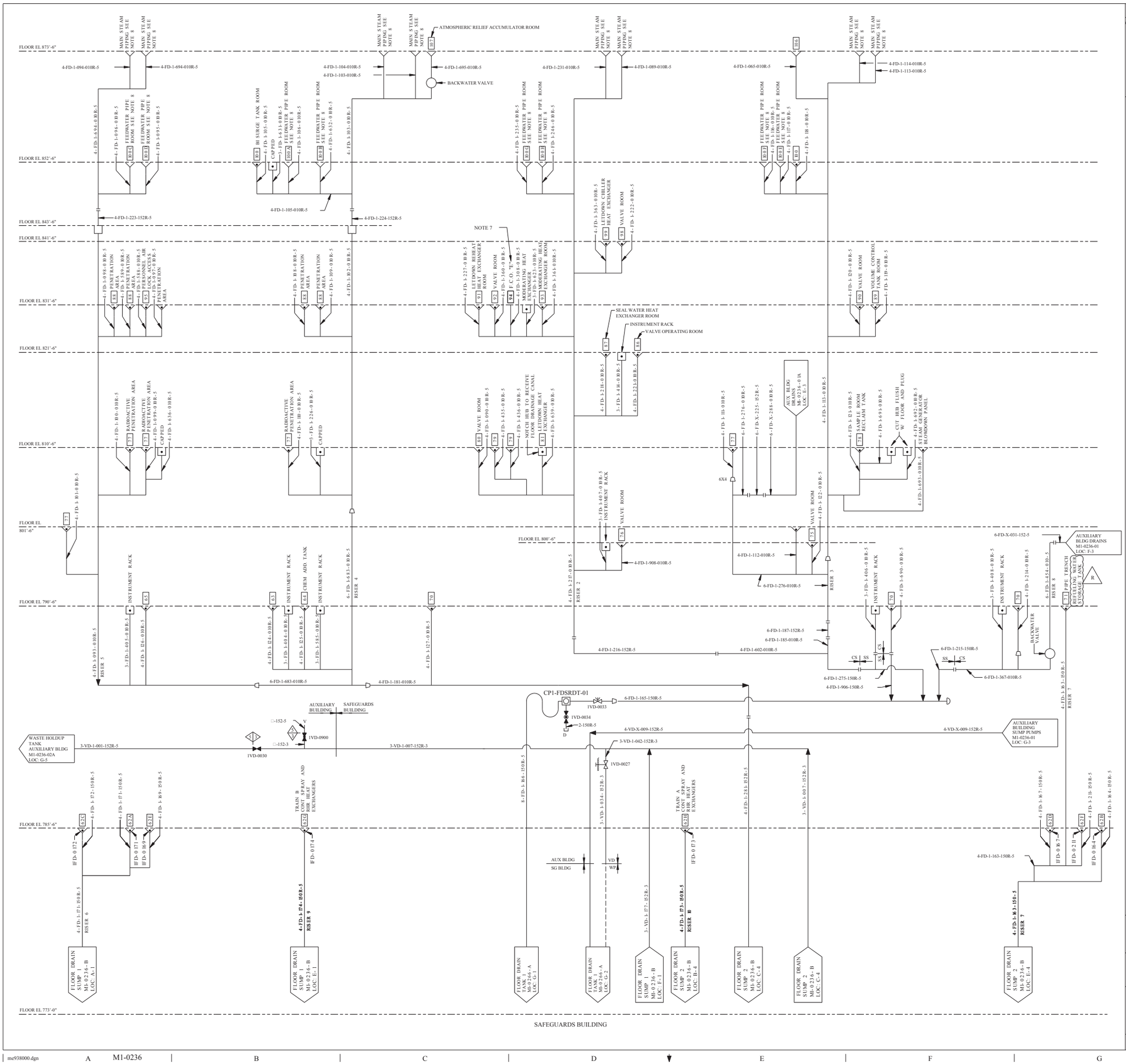

REV	DWN	CHKD	APVD	REMARKS
CP-21	DLK 03-12 2013	MM 03-14 2013		THIS DRAWING REVISED TO INCORPORATE DESIGN CHANGE FDA 2013-000024-01-00 PER SK-0005-13-000024-01-00.

NOTES:

1. DELETED
2. FOR MECHANICAL SYMBOLS AND NOTES SEE DRAWING M1-0200.
3. THE BOXED-IN NUMBERS DESIGNATE THE SPECIFIC ROOM NUMBERS ON THE PLUMBING DRAWINGS WHICH SHOW VARIOUS DRAIN LOCATIONS.
4. DRAIN SYMBOLS ARE AS FOLLOWS:
   - FLOOR DRAIN WITHOUT BACKWATER VALVE.
   - FLOOR DRAIN WITH BACKWATER VALVE. (SEE NOTE 6 AND 9)
   - EQUIPMENT DRAIN WITHOUT BACKWATER VALVE.
   - EQUIPMENT DRAIN WITH BACKWATER VALVE. (SEE NOTE 6 AND 9)
5. PIPING DESIGNATED FD IS PROCURED BY SPECIFICATION 2323-MS-73 AND PIPING DESIGNATED VD IS PROCURED BY SPECIFICATIONS 2323-MS-43B AND 2323-MS-44B.
6. UNLESS OTHERWISE NOTED, EQUIPMENT TAG NUMBERS FOR BACKWATER VALVES SHOULD CORRESPOND TO THE NUMBER OF THE PIPE IN WHICH IT IS INSTALLED. THAT IS, THE BACKWATER VALVE IN LINE NUMBER 6-FD-1-454-010-5 SHOULD BE 1FD-0454.
7. F.C.O. : FLOOR CLEAN-OUT. FOR DETAIL "E" SEE DRAWING 2323-M1-0680.
8. FEEDWATER DRAINS AT ELEV 852'-6" AND MAIN STEAM DRAINS AT ELEV 873'-6" ARE EQUIPPED WITH BALL FLOATS. NO BACKWATER VALVES ARE INSTALLED AT THOSE LOCATIONS. SEE DWG 2323-M1-0680 FOR BALL FLOAT DETAIL. THE BALL FLOAT TAG NUMBER WILL CORRESPOND TO THE NUMBER OF THE PIPE IN WHICH IT IS INSTALLED. (EXAMPLE: BALL FLOAT IN LINE NUMBER 4-FD-1-103-010R-5 WILL HAVE TAG NUMBER "1-103-BF").
9. FOR LOCATION OF BACKWATER VALVES AT FLOOR ELEVATIONS 773' AND 785' SEE DCN 7245 REV 0.

FSAR FIGURE 9.3-6

THIS DRAWING CREATED ELECTRONICALLY

DRAWING M1-0236 REV CP-14 HAS BEEN SPLIT INTO THE FOLLOWING SHEETS:
M1-0236
M1-0236-B

DRAWING 2323-M1-0236 REV CP-6 HAS BEEN SPLIT INTO THE FOLLOWING SHEETS:
M1-0236
M1-0236-A

CLASS I

(NUCLEAR SAFETY-RELATED)

SAFETY CLASS 1	SEISMIC CATEGORY I
SAFETY CLASS 2	CLASS 1E
SAFETY CLASS 3	ASSOCIATED CIRCUITS

LUMINANT
CPNPP
GLEN ROSE, TEXAS

FLOW DIAGRAM
VENTS AND DRAINS SYSTEM
SAFEGUARDS AND AUXILIARY BUILDING

DWG. NO.	SH. NO.	REV.
M1-0236	-	CP-21

$$$$$$$$DATE$$$$$$$$ REF CKD CP-20 3/12/13

me938000.dgn M1-0236 < FINAL PRINT >

REV	DWN	CHKD	APVD	REMARKS
CP-21	DLK 03-12-2013	MM 03-14-2013		THIS DRAWING REVISED TO INCORPORATE DESIGN CHANGE FDA 2013-000024-01-00 PER SK-0004-13-000024-01-00.

NOTES:

1. FOR SWITCH LEVEL SYSTEM AND PUMP CONTROL SEE TYPICAL SUMP DETAIL.
2. FOR MECHANICAL SYMBOLS AND NOTES SEE DRAWING M1-0200.
3. THE BOXED-IN NUMBERS DESIGNATE THE SPECIFIC ROOM NUMBERS ON THE PLUMBING DRAWINGS WHICH SHOW VARIOUS DRAIN LOCATIONS.
4. FOR DRAIN SYMBOLS SEE M1-0236, NOTE 4.
5. OPERATIONS MAY INSTALL RAISED HUBS AND/OR PLUGS FOR NON RADIOACTIVE DRAINS THAT DUE TO THEIR PROXIMITY TO A RADIOACTIVE DRAIN COULD COLLECT RADIOACTIVE FLUIDS.
6. PIPING DESIGNATED FD IS PROCURED BY SPECIFICATION MS-73 AND PIPING DESIGNATED VD IS PROCURED BY SPECIFICATIONS MS-43A AND MS-44A.
7. ALTERNATE DRAIN PATH.

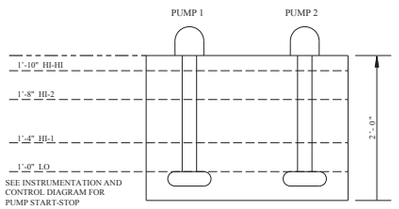

TYPICAL SUMP DETAIL

FSAR FIGURE 9.3-6

THIS DRAWING CREATED ELECTRONICALLY

DRAWING 2323-M1-0236 REV CP-6 HAS BEEN SPLIT INTO THE FOLLOWING SHEETS:
M1-0236
M1-0236-A

CLASS II

LUMINANT
CPNPP
GLEN ROSE, TEXAS

FLOW DIAGRAM
VENTS AND DRAINS SYSTEM
SAFEGUARDS BUILDING

DWG. NO.	SH. NO.	REV.
M1-0236	A	CP-21

$$$$$$$DATES$$$$$$ REF CKD 3/12/13 CP-20

me937900.dgn A M1-0236-A B C D E F G < FINAL PRINT > H

REV.	DWN	CHKD	APVD	REMARKS
CP-3	DLK 08-13-2009	MM 08-17-2009		THIS DRAWING REVISED TO INCORPORATE DESIGN CHANGE FDA 2009-001707-01-00 PER SK-0003-09-001707-01-00. EDITORIAL CHANGE AS NOTED.

NOTES:

1. FOR SWITCH LEVEL SYSTEM AND PUMP CONTROL SEE TYPICAL SUMP DETAIL.
2. FOR MECHANICAL SYMBOLS AND NOTES SEE DRAWING M1-0200.
3. THE BOXED-IN NUMBERS DESIGNATE THE SPECIFIC ROOM NUMBERS ON THE PLUMBING DRAWINGS WHICH SHOW VARIOUS DRAIN LOCATIONS.
4. FOR DRAIN SYMBOLS SEE M1-0236, NOTE 4.
5. PIPING DESIGNATED FD IS PROCURED BY SPECIFICATION 2323-MS-73 AND PIPING DESIGNATED VD IS PROCURED BY SPECIFICATIONS 2323-MS-43B AND 2323-MS-44B.

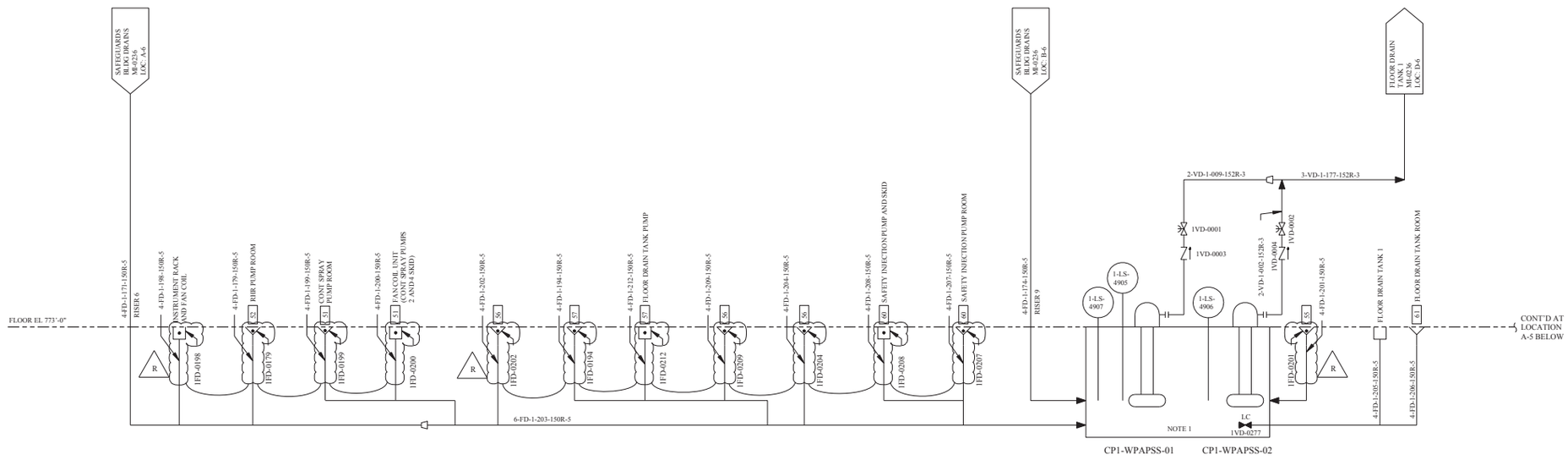

FLOOR DRAIN SUMP 1
CP1-FDSPSG-01

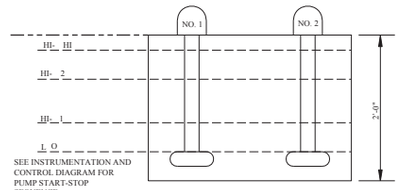

SEE INSTRUMENTATION AND CONTROL DIAGRAM FOR PUMP START-STOP SEQUENCE
SEE M1-2400 FOR SETPOINTS

SAFEGUARDS SUMP DETAIL

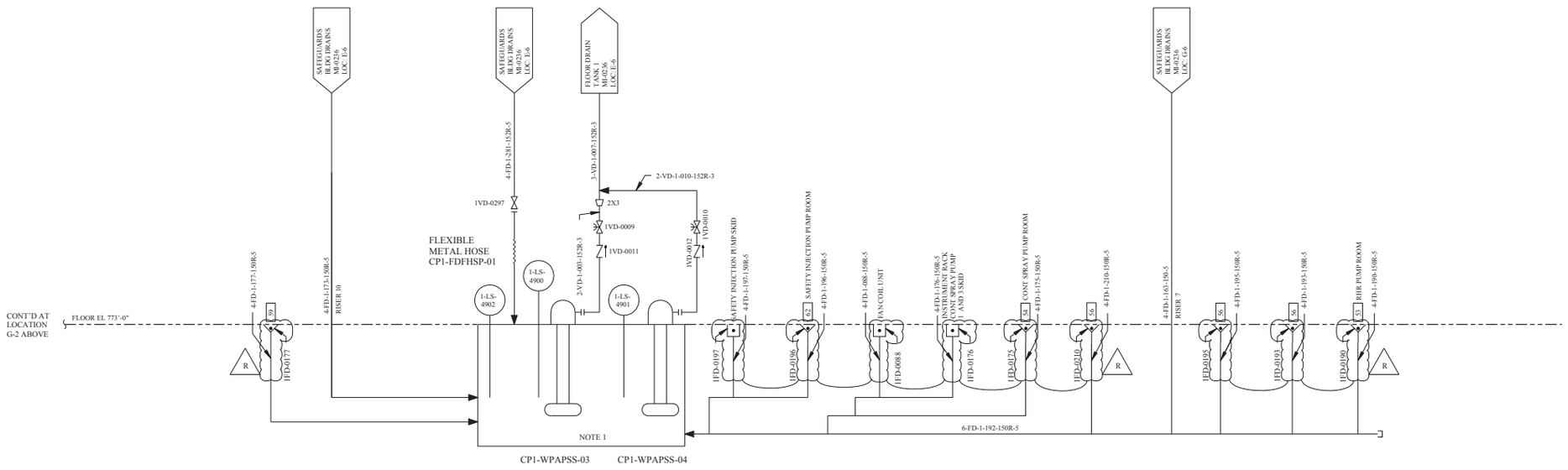

FLOOR DRAIN SUMP 2
CP1-FDSPSG-02

SAFEGUARDS BUILDING

R EDITORIAL

FSAR FIGURE 9.3-6

THIS DRAWING CREATED ELECTRONICALLY

DRAWING M1-0236 REV CP-14 HAS BEEN SPLIT INTO THE FOLLOWING SHEETS:
M1-0236
M1-0236-B

CLASS I
(NUCLEAR SAFETY-RELATED)

SAFETY CLASS 1	SEISMIC CATEGORY I
SAFETY CLASS 2	CLASS 1E
SAFETY CLASS 3	ASSOCIATED CIRCUITS

LUMINANT
CPNPP
GLEN ROSE, TEXAS

FLOW DIAGRAM
VENTS AND DRAINS SYSTEM
SAFEGUARDS AND AUXILIARY BUILDING

DWG. NO.	SH. NO.	REV.
M1-0236	B	CP-3

REF CKD CP-1 10/27/97

$$$$$$$DATE$$$$$$

me938100.dgn

< FINAL PRINT >

REV	DWN	CHK	LA	PVD	REMARKS
CP-20	DEK 08-13 2009	MM 08-17 2009			THIS DRAWING REVISED TO INCORPORATE DESIGN CHANGE FDA 2009-001707-01-00 PER SK-00004-09-001707-01-00.

NOTES:

1. FOR MECHANICAL SYMBOLS AND NOTES SEE DRAWING M1-0200.
2. THE BOX-IN NUMBERS DESIGNATE THE SPECIFIC ROOM NUMBERS ON THE PLUMBING DRAWINGS SHOWING VARIOUS DRAIN LOCATIONS.
3. FOR TYPICAL DRAIN SYMBOLS SEE DRAWING M2-0238 NOTE 3.
4. OPERATIONS MAY INSTALL RAISED HUBS AND/OR PLUGS FOR NON RADIOACTIVE DRAINS THAT DUE TO THEIR PROXIMITY TO A RADIOACTIVE DRAIN COULD COLLECT RADIOACTIVE FLUIDS.
5. PIPING DESIGNATED FD IS PROCURED BY SPECIFICATION MS-73 AND PIPING DESIGNATED VD IS PROCURED BY SPECIFICATIONS MS-43B AND MS-44B.
6. THIS PADDLE BLIND TO BE INSTALLED OR REMOVED ONLY AT THE DIRECTION OF NUCLEAR OPERATIONS.
7. F.C.O. : FLOOR CLEAN-OUT. FOR DETAIL "E" SEE DRAWING 2323-M1-0680.
8. FEEDWATER DRAINS AT ELEV 852'-6" AND MAIN STEAM DRAINS AT ELEV 873'-6" ARE EQUIPPED WITH BALL FLOATS. NO BACKWATER VALVES ARE INSTALLED AT THOSE LOCATIONS. SEE DWG 2323-M1-0680 FOR BALL FLOAT DETAIL. THE BALL FLOAT TAG NUMBER WILL CORRESPOND TO THE NUMBER OF THE PIPE IN WHICH IT IS INSTALLED. (EXAMPLE: BALL FLOAT IN LINE NUMBER 4-FD-2-103-010R-5 WILL HAVE TAG NUMBER "2-103-BF").

FSAR FIGURE 9.3-6

THIS DRAWING CREATED ELECTRONICALLY

DRAWING M2-0236 REV CP-12
HAS BEEN SPLIT INTO THE FOLLOWING SHEETS:
M2-0236
M2-0236-B

DRAWING 2323-M2-0236 REV CP-1
HAS BEEN SPLIT INTO THE FOLLOWING SHEETS:
M2-0236
M2-0236-A

CLASS I
(NUCLEAR SAFETY-RELATED)
SAFETY CLASS 1 — SEISMIC CATEGORY I
SAFETY CLASS 2 — CLASS 1E
SAFETY CLASS 3 — ASSOCIATED CIRCUITS

LUMINANT
CPNPP
GLEN ROSE, TEXAS

FLOW DIAGRAM
VENTS AND DRAINS SYSTEM
SAFEGUARDS AND AUXILIARY BUILDING

DWG. NO.	SH. NO.	REV.
M2-0236	-	CP-20

SAFEGUARDS BUILDING

REV	DWN	CHKD	APVD	REMARKS
CP-15	DLK 06-13 2009	MM 06-17 2009		THIS DRAWING REVISED TO INCORPORATE DESIGN CHANGE FDA 2009-001707-01-00 PER SK-0005-09-001707-01-00.

NOTES:

1. FOR MECHANICAL SYMBOLS AND NOTES SEE DRAWING M1-0200.
3. FOR TYPICAL DRAIN SYMBOLS, SEE DRAWING M2-0238 NOTE 3.
4. OPERATIONS MAY INSTALL RAISED HUBS AND/OR PLUGS FOR NON RADIOACTIVE DRAINS THAT DUE TO THEIR PROXIMITY TO A RADIOACTIVE DRAIN COULD COLLECT RADIOACTIVE FLUIDS.
5. PIPING DESIGNATED FD IS PROCURED BY SPECIFICATION MS-73 AND PIPING DESIGNATED VD IS PROCURED BY SPECIFICATIONS MS-43B AND MS-44B.
6. FLOOR DRAINS IN TUBING TRENCH HAVE BEEN FILLED WITH GROUT AND ABANDONED IN PLACE.
7. ALTERNATE DRAIN FLOW PATH.

FSAR FIGURE 9.3-6

THIS DRAWING CREATED ELECTRONICALLY

DRAWING 2323-M2-0236 REV CP-1
HAS BEEN SPLIT INTO THE FOLLOWING SHEETS:
M2-0236
M2-0236-A

CLASS II

LUMINANT
CPNPP
GLEN ROSE, TEXAS

FLOW DIAGRAM
VENTS AND DRAINS SYSTEM
SAFEGUARDS BUILDING

DWG. NO.	SH. NO.	REV.
M2-0236	A	CP-15

REF CKD 36/97 CP-8

$$$$$$$DATE$$$$$$

me938300.dgn M2-0236-A

< FINAL PRINT >

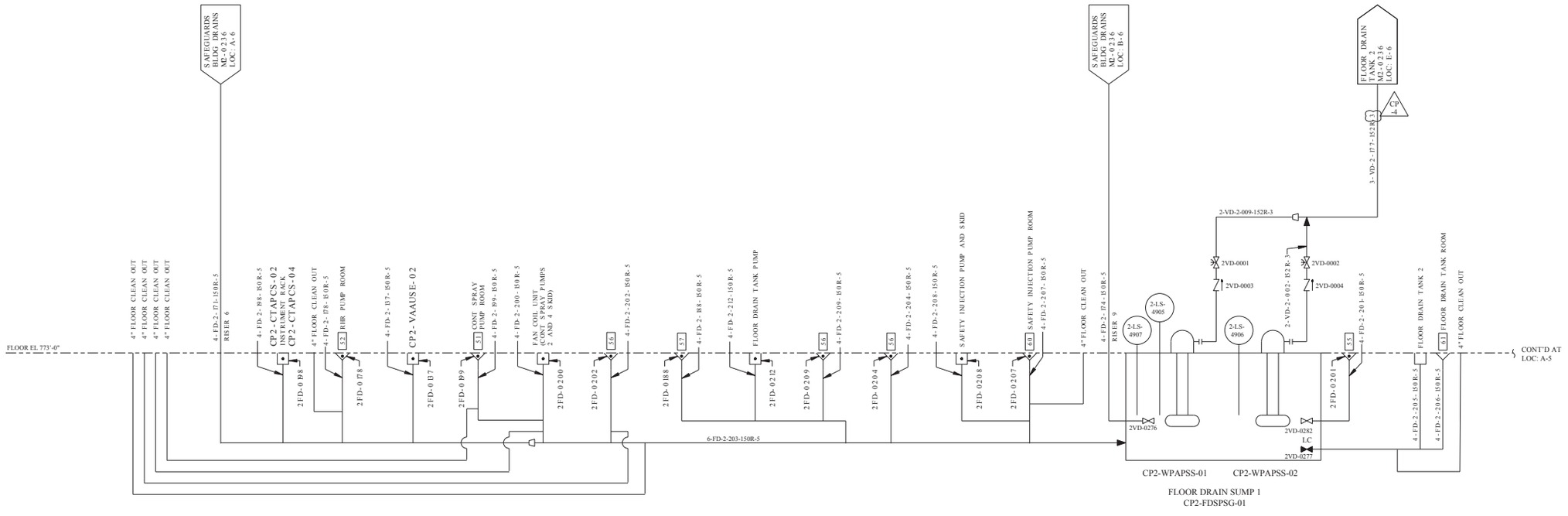

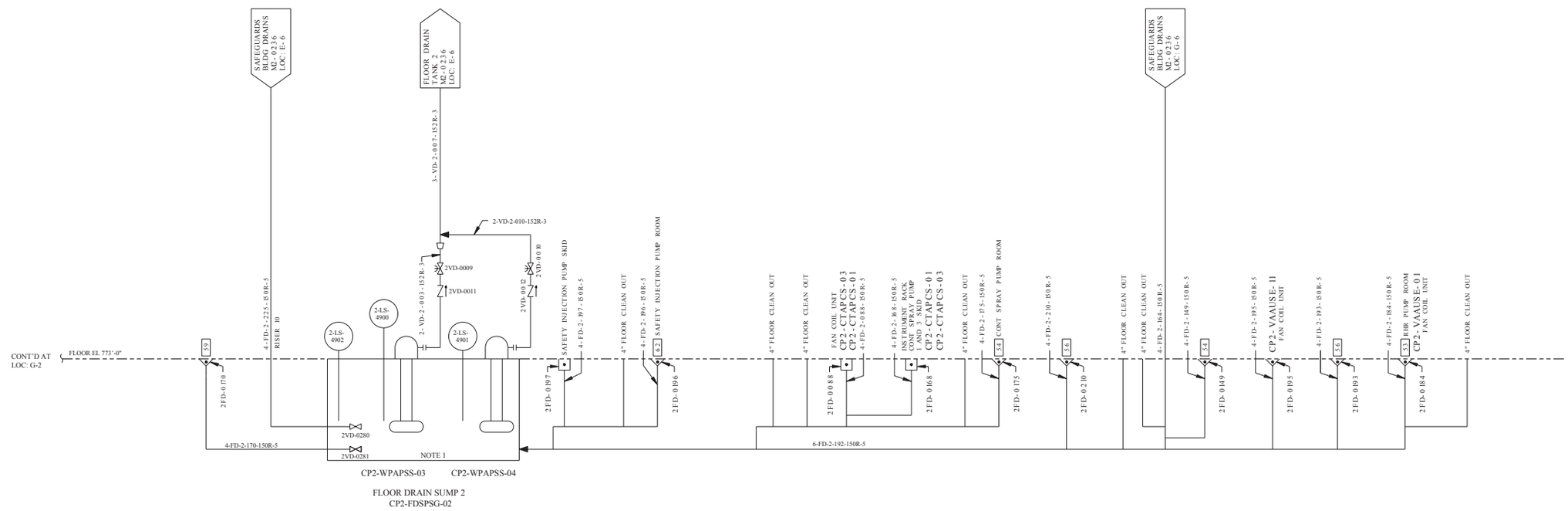

REV	DWN	CHKD	APVD	REMARKS
CP-4	DJK 01-29-2013			THIS DRAWING REVISED TO EDITORIALLY CORRECT THE LINE SEGMENT NUMBER VD-2-177 SAFETY CLASS FROM 5 TO 3. THIS LATENT ERROR OCCURRED IN 1997 WHEN M2-0236-B REV CP-1 WAS CREATED WHEN SPLITTING FROM M2-0236 REV CP-11. THIS ADMINISTRATIVE/EDITORIAL CHANGE WILL BE IN AGREEMENT WITH APPROVE DESIGN DOCUMENTS M2-0236 REV CP-20 AND MAXIMO.

NOTES:

1. FOR MECHANICAL SYMBOLS AND NOTES SEE DRAWING M1-0200.
2. THE BOXED-IN NUMBERS DESIGNATE THE SPECIFIC ROOM NUMBERS ON THE PLUMBING DRAWINGS WHICH SHOW VARIOUS DRAIN LOCATIONS.
3. FOR TYPICAL DRAIN SYMBOLS SEE DRAWING M2-0238 NOTE 3.
4. OPERATIONS MAY INSTALL RAISED HUBS AND/OR PLUGS FOR NON RADIOACTIVE DRAINS THAT DUE TO THEIR PROXIMITY TO A RADIOACTIVE DRAIN COULD COLLECT RADIOACTIVE FLUIDS.
5. PIPING DESIGNATED FD IS PROCURED BY SPECIFICATION MS-73 AND PIPING DESIGNATED VD IS PROCURED BY SPECIFICATIONS MS-43B AND MS-44B.

FSAR FIGURE 9.3-6

THIS DRAWING CREATED ELECTRONICALLY

DRAWING M2-0236 REV CP-11
HAS BEEN SPLIT INTO THE FOLLOWING SHEETS:
M2-0236
M2-0236-B

CLASS I
(NUCLEAR SAFETY-RELATED)
SAFETY CLASS 1 — SEISMIC CATEGORY I
SAFETY CLASS 2 — CLASS 1E
SAFETY CLASS 3 — ASSOCIATED CIRCUITS

LUMINANT
CPNPP
GLEN ROSE, TEXAS

FLOW DIAGRAM
VENTS AND DRAINS SYSTEM
SAFEGUARDS AND AUXILIARY BUILDING

DWG. NO. M2-0236 | SH. NO. B | REV. CP-4

< FINAL PRINT >

me938400.dgn M2-0236-B

SSSSSSSDATESSSSSS

REV	DWN	CHK	APVD	REMARKS
CP-17	GLK 03-06-2006	MM 03-07-2006		THIS DRAWING REVISED TO INCORPORATE DESIGN CHANGE FDA 2004-001444-01-00 PER SK-0002-04-001444-01-00.

NOTES:

1. FOR SWITCH LEVEL SYSTEM AND PUMP CONTROL SEE TYPICAL SUMP DETAIL.
2. THE BOXED IN NUMBERS DESIGNATE THE SPECIFIC ROOM NUMBERS ON THE PLUMBING DRAWING SHOWING VARIOUS DRAIN LOCATIONS.
3. FOR DRAIN SYMBOLS SEE M1-0236, NOTE 4.
4. ALL PIPING IS NON-NUCLEAR SAFETY CLASS.
5. FOR MECHANICAL SYMBOLS AND NOTES SEE DRAWING M1-0200.
6. DELETED
7. PIPING DESIGNATED FD IS PROCURED BY SPECIFICATION MS-73 AND PIPING DESIGNATED VD IS PROCURED BY SPECIFICATION MS-44B.
8. PIPING IS PLUGGED BELOW FLOOR.

SCHEDULE 1	
VALVE NUMBER	LINE NUMBER
XFD-0900I	6-FD-X-929-150-S
XFD-0900J	6-FD-X-930-150-S
XFD-0900K	6-FD-X-931-150-S
XFD-0900L	6-FD-X-932-150-S
XFD-0900M	6-FD-X-933-150-S
XFD-0900N	6-FD-X-934-150-S
XFD-0900O	6-FD-X-935-150-S
XFD-0900P	6-FD-X-936-150-S

SCHEDULE II	
VALVE NUMBER	LINE NUMBER
XFD-0900A	6-FD-X-921-150-S
XFD-0900B	6-FD-X-922-150-S
XFD-0900C	6-FD-X-923-150-S
XFD-0900D	6-FD-X-924-150-S
XFD-0900E	6-FD-X-925-150-S
XFD-0900F	6-FD-X-926-150-S
XFD-0900G	6-FD-X-927-150-S
XFD-0900H	6-FD-X-928-150-S

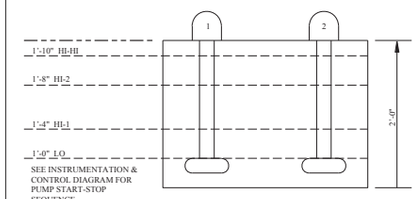

SEE INSTRUMENTATION & CONTROL DIAGRAM FOR PUMP START-STOP SEQUENCE

TYPICAL SUMP DETAIL

FSAR FIGURE 9.3-7

THIS DRAWING CREATED ELECTRONICALLY

DRAWING 2323-M1-0236-01 REV CP-4
HAS BEEN SPLIT INTO THE FOLLOWING SHEETS:
M1-0236-01
M1-0236-01A

CLASS II

TXU POWER
CPSES
GLEN ROSE, TEXAS

FLOW DIAGRAM
VENTS AND DRAINS SYSTEM
AUXILIARY BUILDING

DWG. NO.	SH. NO.	REV.
M1-0236	01	CP-17

me679000.dgn A M1-0236-01 FINAL PRINT

REV	DWN	CHKD	APVD	REMARKS
CP-13	JRMC 04-10 2009	DJL 04-11 2009		THIS DRAWING REVISED TO INCORPORATE DESIGN CHANGE FDA 2009-003898-01-00 PER SK-0001-09-003898-01-00.

NOTES:

1. FOR SWITCH LEVEL SYSTEM AND PUMP CONTROL SEE TYPICAL SUMP DETAIL.
2. THE BOXED IN NUMBERS DESIGNATE THE SPECIFIC ROOM NUMBERS ON THE PLUMBING DRAWING SHOWING VARIOUS DRAIN LOCATIONS.
3. FOR DRAIN SYMBOLS SEE M1-0236, NOTE 4.
4. ALL PIPING IS NON-NUCLEAR SAFETY CLASS.
5. FOR MECHANICAL SYMBOLS AND NOTES SEE DRAWING M1-0200.
6. DELETED
7. PIPING DESIGNATED FD IS PROCURED BY SPECIFICATION MS-73 AND PIPING DESIGNATED VD IS PROCURED BY SPECIFICATION MS-44B.
8. EMERG RECIRC AND EMREG PRESS UNIT DRAINS AT EL 854'-4" ARE EQUIPPED WITH BALL FLOATS TO MITIGATE UNFILTERED AIR INLEAKAGE INTO ROOM 150A PER FDA 1999-002168-01.
9. BACKSPLASH ENCLOSURE MAY BE INSTALLED PER FDA-2009-003898-01.

R

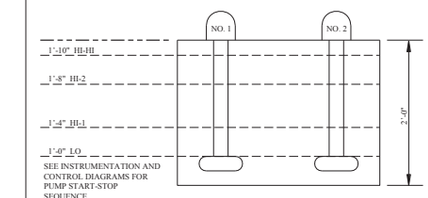

TYPICAL SUMP DETAIL

FSAR FIGURE 9.3-7

THIS DRAWING CREATED ELECTRONICALLY

DRAWING 2323-M1-0236-01 REV CP-4
HAS BEEN SPLIT INTO THE FOLLOWING SHEETS:
M1-0236-01
M1-0236-01A

CLASS II

LUMINANT
CPNPP
GLEN ROSE, TEXAS

FLOW DIAGRAM
VENTS & DRAINS SYSTEM
AUXILIARY BUILDING

DWG. NO. M1-0236 | SH. NO. 01A | REV. CP-13

SSSSSSDATSSSSSS

me934500.dgn A M1-0236-01A

< FINAL PRINT >

REV	DWN	CHKD	APVD	REMARKS
CP-17	GA 09-23-1999			THIS DRAWING REVISED TO INCORPORATE DESIGN CHANGE DCN 12707 REV 0.

NOTES:

1. FOR SWITCH LEVEL SYSTEM AND PUMP CONTROL SEE TYPICAL SUMP DETAIL.
2. THE BOXED IN NUMBERS DESIGNATE THE SPECIFIC ROOM NUMBERS ON THE PLUMBING DRAWINGS SHOWING VARIOUS DRAIN LOCATIONS.
3. FOR DRAIN SYMBOLS SEE M1-0236, NOTE 4.
4. ALL PIPING IS NON-NUCLEAR SAFETY CLASS.
5. FOR MECHANICAL SYMBOLS AND NOTES SEE DRAWING M1-0200.
6. PIPING DESIGNATED FD IS PROCURED BY SPECIFICATION MS-73 AND PIPING DESIGNATED VD IS PROCURED BY SPECIFICATION MS-44B.
7. PIPING IS PLUGGED BELOW FLOOR.

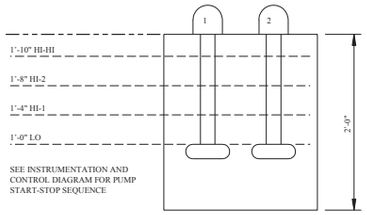

TYPICAL SUMP DETAIL

FSAR FIGURE 9.3-7

THIS DRAWING CREATED ELECTRONICALLY

DRAWING 2323-M1-0236-02 REV CP-6
HAS BEEN SPLIT INTO THE FOLLOWING SHEETS:
M1-0236-02
M1-0236-02A

CLASS II

LUMINANT
CPSES
GLEN ROSE, TEXAS

FLOW DIAGRAM
VENTS AND DRAINS SYSTEM
AUXILIARY BUILDING

DWG. NO.	SH. NO.	REV.
M1-0236	02	CP-17

FINAL PRINT

REF CRD CP-14 2/16/98

me0001s2.dgn

REV.	DWN	CHKD	APVD	REMARKS
CP-13	DLK 05-13-2010	EHS 05-26-2010		THIS DRAWING REVISED TO INCORPORATE DESIGN CHANGE FDA 2003-001871-03-00 PER SK-0001-01-001871-03-00.

NOTES:

1. FOR SWITCH LEVEL SYSTEM AND PUMP CONTROL SEE TYPICAL SUMP DETAIL.
2. THE BOXED IN NUMBERS DESIGNATE THE SPECIFIC ROOM NUMBERS ON THE PLUMBING DRAWINGS SHOWING VARIOUS DRAIN LOCATIONS.
3. FOR DRAIN SYMBOLS SEE M1-0236, NOTE 4.
4. ALL PIPING IS NON-NUCLEAR SAFETY CLASS.
5. FOR MECHANICAL SYMBOLS AND NOTES SEE DRAWING M1-0200.
6. PIPING DESIGNATED FD IS PROCURED BY SPECIFICATION MS-73 AND PIPING DESIGNATED VD IS PROCURED BY SPECIFICATION MS-44A.
7. PIPING IS PLUGGED BELOW FLOOR.
8. EMERG RECIRC AND EMREG PRESS UNIT DRAINS AT EL 854'-4" ARE EQUIPPED WITH BALL FLOATS TO MITIGATE UNFILTERED AIR INLEAKAGE INTO ROOM 150 PER FDA 1999-002168-01.

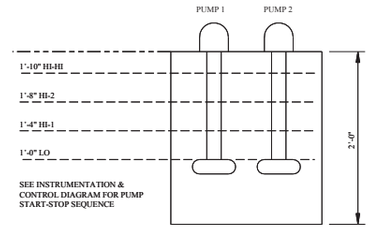

TYPICAL SUMP DETAIL

DRAWING 2323-M1-0236-02	REV CP-6
HAS BEEN SPLIT INTO THE FOLLOWING SHEETS:	
M1-0236-02	
M1-0236-02A	

CLASS II

LUMINANT
CPNPP
GLEN ROSE, TEXAS

FLOW DIAGRAM
VENTS AND DRAIN SYSTEM
AUXILIARY BUILDING

DWG. NO.	SH. NO.	REV.
M1-0236	02A	CP-13

FINAL PRINT

FSAR FIGURE 9.3-7

THIS DRAWING CREATED ELECTRONICALLY

REF CKD CP-10 05/14/98

me996500.dgn A M1-0236-02A

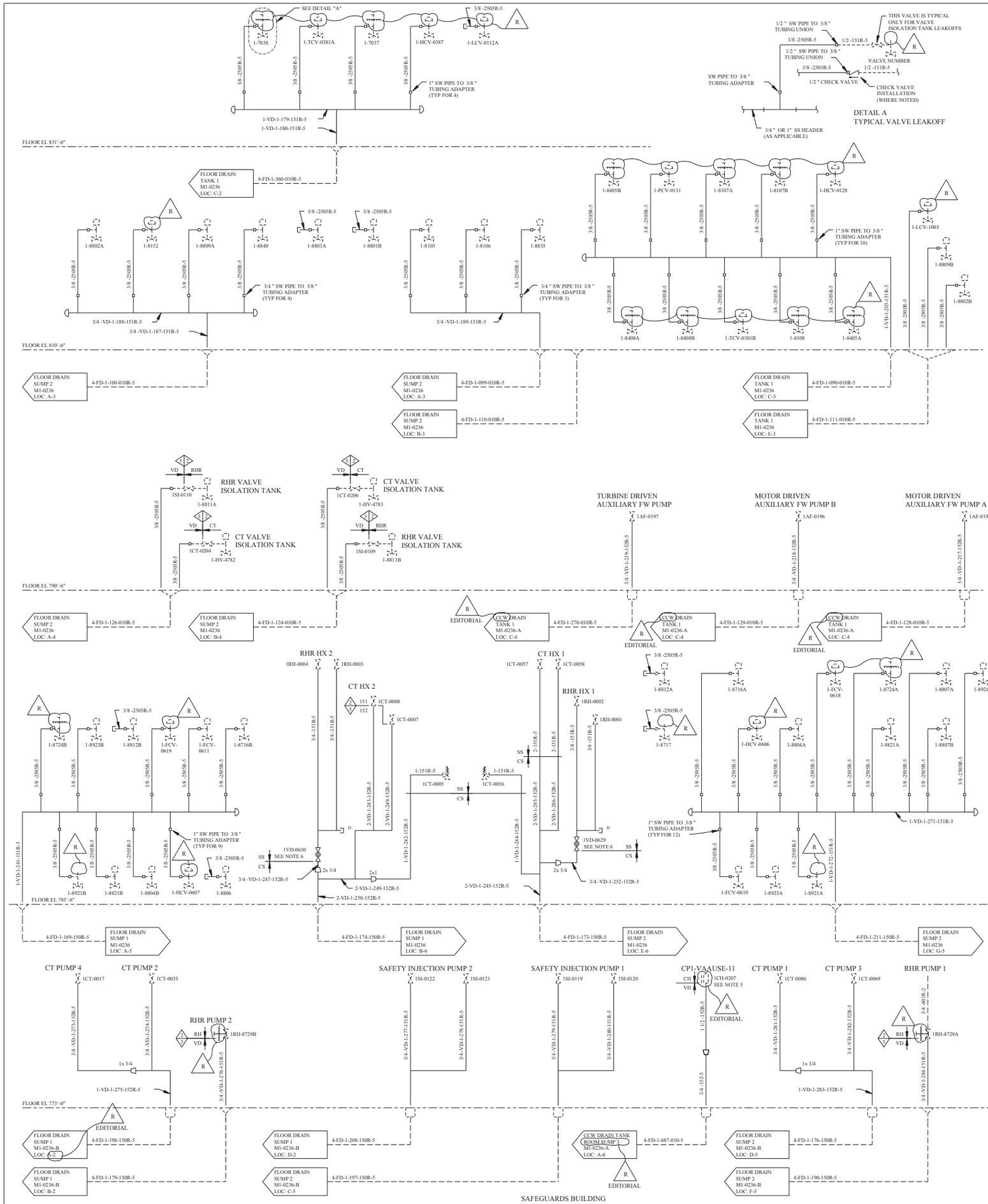

DETAIL A
TYPICAL VALVE LEAKOFF

VALVE LEAKOFFS - SAFEGUARDS BUILDING

VALVE NO.	LOCATION	REFERENCE		
1-7037	B-1	CVCS	M1-0256-A	(LOC: E-4)
1-7038	B-1	CVCS	M1-0256-A	(LOC: G-6)
1-8105	C-2	CVCS	M1-0255-01	(LOC: A-2)
1-8106	C-2	CVCS	M1-0255-01	(LOC: A-2)
1-8107A	D-1	CVCS	M1-0254	(LOC: A-2)
1-8107B	D-1	CVCS	M1-0254	(LOC: A-1)
1-8108	E-2	CVCS	M1-0254	(LOC: A-1)
1-8152	A-2	CVCS	M1-0253-A	(LOC: G-2)
1-8405A	E-2	CVCS	M1-0254	(LOC: A-1)
1-8405B	D-1	CVCS	M1-0254	(LOC: A-2)
1-8408A	D-2	CVCS	M1-0254	(LOC: C-2)
1-8408B	D-2	CVCS	M1-0254	(LOC: C-1)
1-8716A	D-4	RHR	M1-0260	(LOC: A-3)
1-8716B	B-4	RHR	M1-0260	(LOC: A-4)
1-8717	D-4	RHR	M1-0260	(LOC: B-4)
1-8724A	E-4	RHR	M1-0260	(LOC: D-2)
1-8724B	A-4	RHR	M1-0260	(LOC: D-4)
1-8801A	B-2	SIS	M1-0261	(LOC: C-2)
1-8801B	B-2	SIS	M1-0261	(LOC: C-2)
1-8802A	A-2	SIS	M1-0263-A	(LOC: A-1)
1-8802B	E-2	SIS	M1-0263-A	(LOC: A-3)
1-8804A	E-4	SIS	M1-0261	(LOC: G-4)
1-8804B	A-5	SIS	M1-0263-A	(LOC: F-3)
1-8806	B-5	SIS	M1-0263-A	(LOC: G-2)
1-8807A	E-4	SIS	M1-0261	(LOC: E-4)
1-8807B	E-4	SIS	M1-0261	(LOC: G-5)
1-8809A	B-2	SIS	M1-0263-B	(LOC: A-1)
1-8809B	E-2	SIS	M1-0263-B	(LOC: A-3)
1-8811A	B-3	SIS	M1-0263-B	(LOC: C-6)
1-8811B	B-3	SIS	M1-0263-B	(LOC: C-5)
1-8812A	D-4	SIS	M1-0263-B	(LOC: F-2)
1-8812B	A-4	SIS	M1-0263-B	(LOC: F-3)
1-8821A	E-4	SIS	M1-0263-A	(LOC: C-3)
1-8821B	A-5	SIS	M1-0263-A	(LOC: C-4)
1-8921A	E-5	SIS	M1-0263-A	(LOC: C-2)
1-8921B	A-5	SIS	M1-0263-A	(LOC: C-3)
1-8923A	D-5	SIS	M1-0263-A	(LOC: F-2)
1-8923B	A-4	SIS	M1-0263-A	(LOC: F-3)
1-8924	E-4	SIS	M1-0261	(LOC: E-4)
1-8835	C-2	SIS	M1-0263-A	(LOC: A-4)
1-8840	B-2	SIS	M1-0263-B	(LOC: A-2)
1-FCV-0610	D-5	RHR	M1-0260	(LOC: E-1)
1-FCV-0611	B-4	RHR	M1-0260	(LOC: E-6)
1-FCV-0618	E-4	RHR	M1-0260	(LOC: C-3)
1-FCV-0619	A-4	RHR	M1-0260	(LOC: C-6)
1-HCV-0128	E-1	CVCS	M1-0254	(LOC: A-2)
1-HCV-0387	C-1	CVCS	M1-0256-A	(LOC: G-6)
1-HCV-0606	D-4	RHR	M1-0260	(LOC: A-2)
1-HCV-0607	A-5	RHR	M1-0260	(LOC: A-4)
1-HIV-4782	B-3	CT	M1-0232-A	(LOC: D-5)
1-HIV-4783	B-3	CT	M1-0232-A	(LOC: D-6)
1-LCV-1003	E-2	WP	M1-0264	(LOC: E-3)
1-LCV-0112A	C-1	CVCS	M1-0254	(LOC: F-3)
1-PCV-0131	D-1	CVCS	M1-0254	(LOC: C-1)
1-TCV-0381A	B-1	CVCS	M1-0256-A	(LOC: G-6)
1-TCV-0381B	D-2	CVCS	M1-0254	(LOC: A-1)

A-5 R EDITORIAL

EQUIPMENT DRAINS - SAFEGUARDS BUILDING

VALVE NO.	LOCATION	REFERENCE		
1AF-0193	E-3	AFS	M1-0206-01	(LOC: B-2)
1AF-0196	E-3	AFS	M1-0206-01	(LOC: B-3)
1AF-0197	D-3	AFS	M1-0206-01	(LOC: B-4)
1CH-0207	D-5	CH	M1-0311-A	(LOC: E-6)
1CT-0005	C-4	CT	M1-0232	(LOC: C-3)
1CT-0007	B-4	CT	M1-0232	(LOC: C-3)
1CT-0008	B-4	CT	M1-0232	(LOC: C-3)
1CT-0017	A-5	CT	M1-0232	(LOC: G-3)
1CT-0035	A-5	CT	M1-0232	(LOC: G-3)
1CT-0056	C-4	CT	M1-0232	(LOC: C-5)
1CT-0057	C-4	CT	M1-0232	(LOC: C-5)
1CT-0058	C-4	CT	M1-0232	(LOC: C-5)
1CT-0069	E-5	CT	M1-0232	(LOC: G-3)
1CT-0086	E-5	CT	M1-0232	(LOC: G-3)
1CT-0204	B-3	CT	M1-0232-A	(LOC: D-5)
1CT-0206	B-3	CT	M1-0232-A	(LOC: D-6)
1RH-0001	D-4	RHR	M1-0260	(LOC: C-3)
1RH-0002	C-4	RHR	M1-0260	(LOC: C-3)
1RH-0003	B-4	RHR	M1-0260	(LOC: B-5)
1RH-0004	B-4	RHR	M1-0260	(LOC: B-5)
1RH-8729A	E-6	RHR	M1-0260	(LOC: D-4)
1RH-8729B	B-6	RHR	M1-0260	(LOC: D-6)
1SI-0109	B-3	SIS	M1-0263-B	(LOC: C-5)
1SI-0110	A-3	SIS	M1-0263-B	(LOC: C-6)
1SI-0119	C-5	SIS	M1-0263-A	(LOC: F-3)
1SI-0120	D-5	SIS	M1-0263-A	(LOC: F-3)
1SI-0121	C-5	SIS	M1-0263-A	(LOC: F-4)
1SI-0122	C-5	SIS	M1-0263-A	(LOC: F-4)

EDITORIAL

REV	DWN	CHK	APVD	REMARKS
CP-15	DLK 08-12 2008	MM 08-19 2008		THIS DRAWING REVISED TO INCORPORATE DESIGN CHANGE FDA 2008-002198-01-00 PER SK-0002-08-002198-01-00. EDITORIAL CHANGES AS NOTED.

NOTES:

1. FOR MECHANICAL SYMBOLS AND NOTES SEE DRAWING M1-0200.
2. FOR DRAIN SYMBOLS SEE M1-0236 NOTE 4.
3. ALL PIPING IS NON-NUCLEAR SAFETY CLASS.
4. PIPING DESIGNATED FD IS PROCURED BY SPECIFICATION MS-73 AND PIPING DESIGNATED VD IS PROCURED BY SPECIFICATION MS-44A.
5. INTERNALS REMOVED FROM VALVE 1CH-0207.
6. VALVES 1VD-0629 AND 1VD-0630 ARE THE NORMAL DRAIN PATH FOR RHR HEAT EXCHANGER DRAINING.

FSAR FIGURE 9.3-7

THIS DRAWING CREATED ELECTRONICALLY

CLASS II

LUMINANT
CPNPP
GLEN ROSE, TEXAS

FLOW DIAGRAM
VENTS AND DRAINS SYSTEM
SAFEGUARDS BUILDING

DWG. NO.	SH. NO.	REV.
M1-0236	03	CP-15

REF CHKD 05/05/2003

SSSSSSDA TSSSSSS

me903500.dgn A M1-0236-03 B C D E F G < FINAL PRINT > H

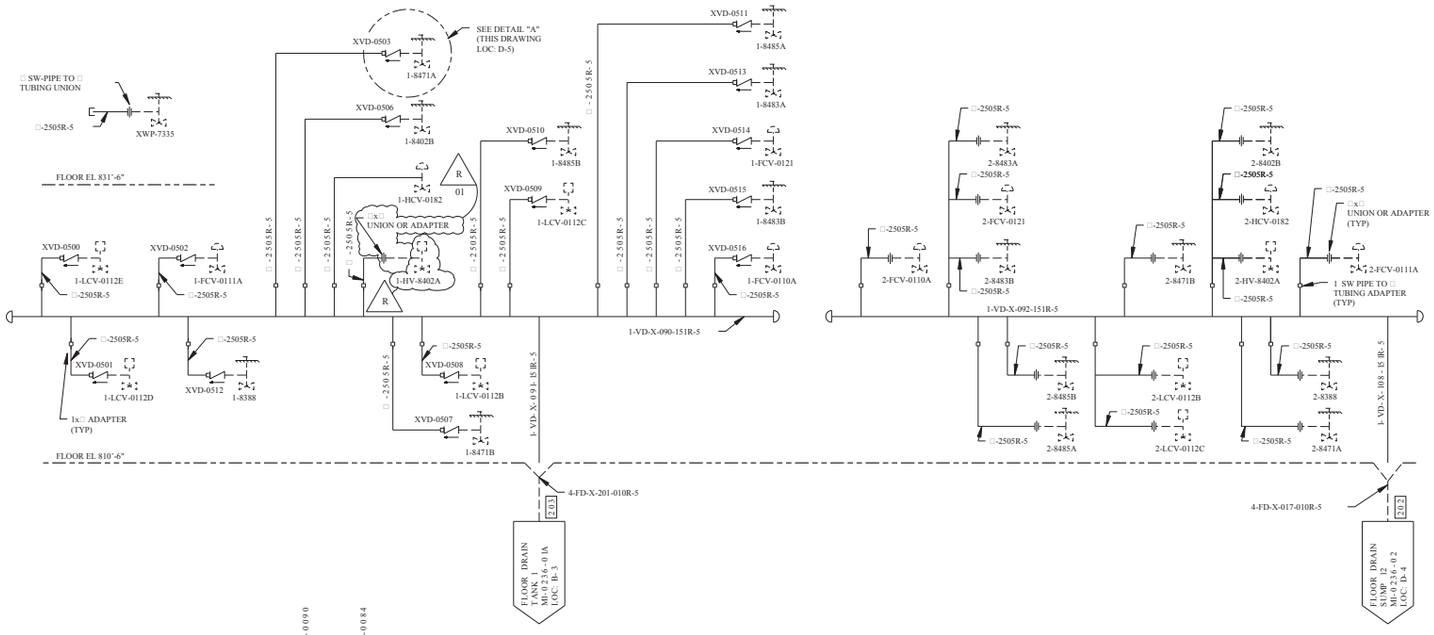

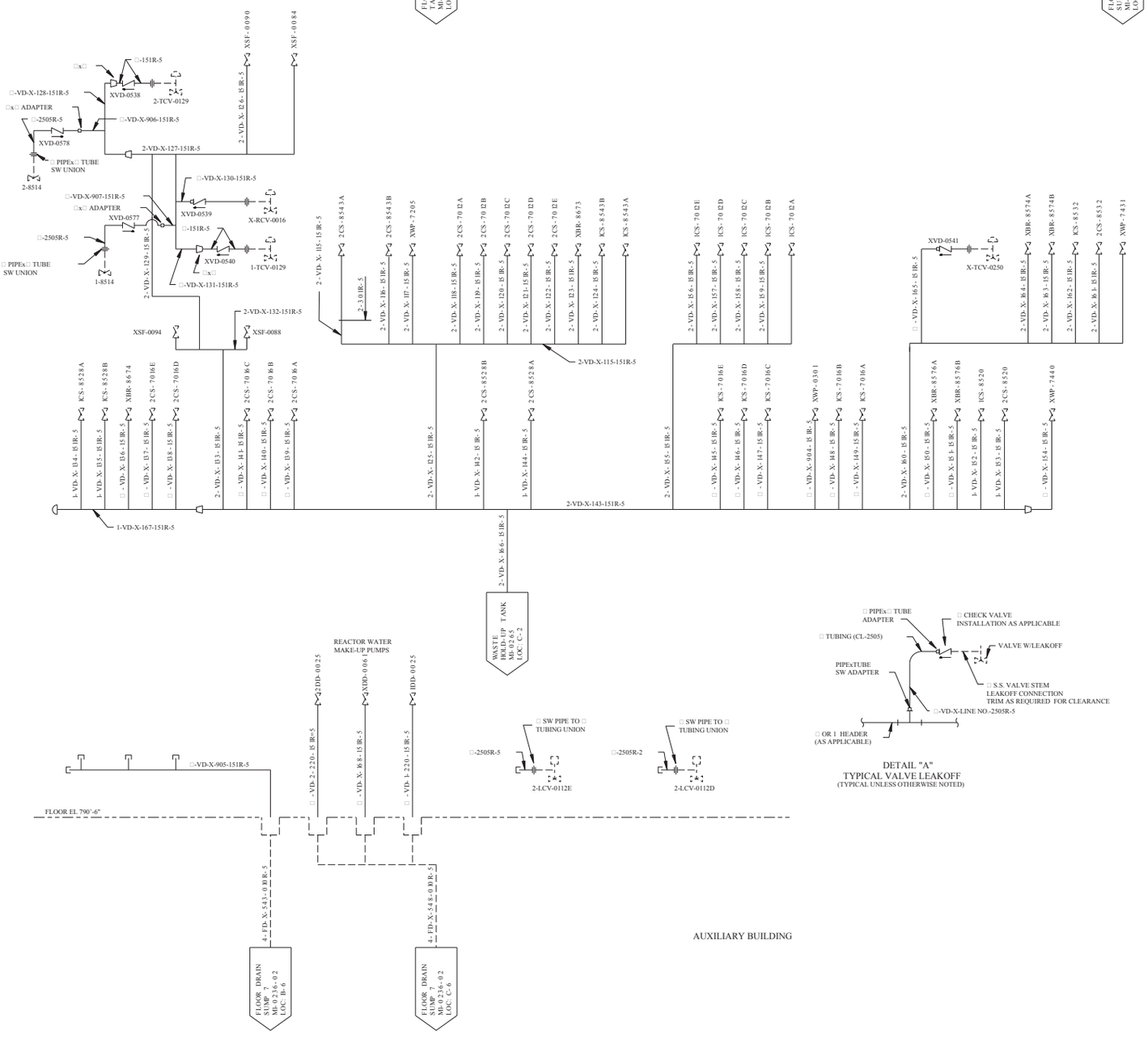

DETAIL "A"
TYPICAL VALVE LEAKOFF
(TYPICAL UNLESS OTHERWISE NOTED)

VALVE LEAKOFFS - AUXILIARY BUILDING

VALVE NO.	LOCATION	REFERENCE	
R 1-8388	A-2	CVCS, F.D.	M1-0255-01 (LOC: C-2)
1-HV-8402A	B-1	CVCS, F.D.	M1-0255-01 (LOC: B-2)
1-8402B	B-1	CVCS, F.D.	M1-0255-01 (LOC: B-2)
1-8471A	B-1	CVCS, F.D.	M1-0255-01 (LOC: G-3)
1-8471B	B-2	CVCS, F.D.	M1-0255-01 (LOC: G-5)
1-8483A	C-1	CVCS, F.D.	M1-0255-01 (LOC: D-3)
1-8483B	C-1	CVCS, F.D.	M1-0255-01 (LOC: D-3)
1-8485A	C-1	CVCS, F.D.	M1-0255-01 (LOC: D-3)
1-8485B	B-1	CVCS, F.D.	M1-0255-01 (LOC: C-5)
1-8514	A-3	CVCS, F.D.	M1-0254 (LOC: G-6)
1-FCV-0110A	C-1	CVCS, F.D.	M1-0255-02 (LOC: E-5)
1-FCV-0111A	A-1	CVCS, F.D.	M1-0255-02 (LOC: C-1)
1-FCV-0121	C-1	CVCS, F.D.	M1-0255-01 (LOC: D-3)
1-HCV-0182	B-1	CVCS, F.D.	M1-0255-01 (LOC: B-2)
1-LCV-0112B	B-2	CVCS, F.D.	M1-0255 (LOC: E-5)
1-LCV-0112C	B-1	CVCS, F.D.	M1-0255 (LOC: D-5)
1-LCV-0112D	A-2	CVCS, F.D.	M1-0255 (LOC: A-5)
1-LCV-0112E	A-1	CVCS, F.D.	M1-0255 (LOC: D-4)
1-TCV-0129	B-3	CVCS, F.D.	M1-0254 (LOC: G-2)
2-8388	E-2	CVCS, F.D.	M2-0254 (LOC: G-4)
2-HV-8402A	E-1	CVCS, F.D.	M2-0255 (LOC: B-1)
2-8402B	E-1	CVCS, F.D.	M2-0255 (LOC: B-1)
2-8471A	E-2	CVCS, F.D.	M2-0254 (LOC: D-5)
2-8471B	D-1	CVCS, F.D.	M2-0254 (LOC: D-6)
2-8483A	D-1	CVCS, F.D.	M2-0254 (LOC: G-5)
2-8483B	D-1	CVCS, F.D.	M2-0254 (LOC: G-5)
2-8485A	D-2	CVCS, F.D.	M2-0254 (LOC: G-5)
2-8485B	D-2	CVCS, F.D.	M2-0254 (LOC: G-6)
2-8514	A-3	CVCS, F.D.	M2-0253-A (LOC: D-4)
2-FCV-0110A	C-1	CVCS, F.D.	M2-0255-02 (LOC: C-1)
2-FCV-0111A	E-1	CVCS, F.D.	M2-0255-02 (LOC: C-1)
2-FCV-0121	D-1	CVCS, F.D.	M2-0254 (LOC: G-5)
2-HCV-0182	E-1	CVCS, F.D.	M2-0255 (LOC: B-1)
2-LCV-0112B	D-2	CVCS, F.D.	M2-0254 (LOC: D-3)
2-LCV-0112C	D-2	CVCS, F.D.	M2-0254 (LOC: D-4)
2-LCV-0112D	C-5	CVCS, F.D.	M2-0254 (LOC: B-4)
2-LCV-0112E	C-5	CVCS, F.D.	M2-0254 (LOC: B-5)
2-TCV-0129	A-3	CVCS, F.D.	M2-0253-A (LOC: E-3)
X-RCV-0016	B-3	BRS	M1-0259 (LOC: A-4)
X-TCV-0250	E-3	BRS	M1-0258 (LOC: B-1)
XWP-7335	A-1	WP	M1-0268 (LOC: A-6)

EQUIPMENT DRAIN VALVES AUXILIARY BUILDING

VALVE NO.	LOCATION	REFERENCE	
1CS-7012A	D-3	CVCS	M1-0256 (LOC: F-3)
1CS-7012B	D-3	CVCS	M1-0256 (LOC: E-3)
1CS-7012C	C-3	CVCS	M1-0256 (LOC: D-3)
1CS-7012D	C-3	CVCS	M1-0256 (LOC: C-3)
1CS-7012E	C-3	CVCS	M1-0256 (LOC: B-3)
1CS-7016A	D-4	CVCS	M1-0256 (LOC: E-4)
1CS-7016B	D-4	CVCS	M1-0256 (LOC: D-4)
1CS-7016C	D-4	CVCS	M1-0256 (LOC: C-4)
1CS-7016D	C-4	CVCS	M1-0256 (LOC: B-4)
1CS-7016E	C-4	CVCS	M1-0256 (LOC: A-4)
1CS-8520	D-4	CVCS	M1-0254 (LOC: G-6)
1CS-8528A	A-4	CVCS	M1-0254 (LOC: D-6)
1CS-8528B	A-4	CVCS	M1-0254 (LOC: B-6)
1CS-8532	E-3	CVCS	M1-0254 (LOC: G-5)
1CS-8543A	C-3	CVCS	M1-0254 (LOC: D-5)
1CS-8543B	C-3	CVCS	M1-0254 (LOC: B-5)
2CS-7012A	B-3	CVCS	M2-0256-B (LOC: B-2)
2CS-7012B	B-3	CVCS	M2-0256-B (LOC: C-2)
2CS-7012C	C-3	CVCS	M2-0256-B (LOC: D-2)
2CS-7012D	C-3	CVCS	M2-0256-B (LOC: E-2)
2CS-7012E	C-3	CVCS	M2-0256-B (LOC: F-2)
2CS-7016A	B-4	CVCS	M2-0256-B (LOC: B-4)
2CS-7016B	B-4	CVCS	M2-0256-B (LOC: C-4)
2CS-7016C	B-4	CVCS	M2-0256-B (LOC: D-4)
2CS-7016D	A-4	CVCS	M2-0256-B (LOC: E-4)
2CS-7016E	A-4	CVCS	M2-0256-B (LOC: F-4)
2CS-8520	E-4	CVCS	M2-0253-A (LOC: D-6)
2CS-8528A	C-4	CVCS	M2-0253-A (LOC: B-4)
2CS-8528B	B-4	CVCS	M2-0253-A (LOC: A-4)
2CS-8532	E-3	CVCS	M2-0253-A (LOC: D-5)
2CS-8543A	B-3	CVCS	M2-0253-A (LOC: D-3)
2CS-8543B	B-3	CVCS	M2-0253-A (LOC: B-3)
XBR-8574A	E-3	BRS	M1-0258 (LOC: B-1)
XBR-8574B	E-3	BRS	M1-0258 (LOC: D-1)
XBR-8576A	D-4	BRS	M1-0258 (LOC: C-3)
XBR-8576B	D-4	BRS	M1-0258 (LOC: F-3)
XBR-8673	C-3	BRS	M1-0259 (LOC: B-1)
XBR-8674	A-4	BRS	M1-0259 (LOC: B-3)
XSF-0084	B-3	SFP	M1-0235-01 (LOC: A-2)
XSF-0088	B-4	SFP	M1-0235-01 (LOC: A-4)
XSF-0090	B-3	SFP	M1-0235-01 (LOC: G-2)
XSF-0094	A-4	SFP	M1-0235-01 (LOC: G-4)
XWP-0301	D-4	WPS	M1-0265 (LOC: C-1)
XWP-7205	B-3	WPS	M1-0265 (LOC: E-4)
XWP-7431	E-3	WPS	M1-0266 (LOC: A-4)
XWP-7440	E-4	WPS	M1-0266 (LOC: A-5)
1DD-0025	B-5	DD	M1-0241-01 (LOC: C-3)
XDD-0061	B-5	DD	M1-0241-01 (LOC: C-2)
2DD-0025	B-5	DD	M2-0241 (LOC: D-5)

REV	DWN	CHK'D	APV'D	REMARKS
CP-15	MHF 03-12-2013	GAW 03-12-2013		THIS DRAWING REVISED TO INCORPORATE DESIGN CHANGE FDA 2010-000172-01-04 PER SK-00009-10-000172-01-01.

NOTES:

1. FOR MECHANICAL SYMBOLS AND NOTES SEE DRAWING M1-0200.
2. FOR DRAIN SYMBOLS SEE M1-0236 NOTE 4.
3. ALL PIPING IS NON-NUCLEAR SAFETY CLASS.
4. PIPING DESIGNATED FD IS PROCURED BY SPECIFICATION MS-73 AND PIPING DESIGNATED VD IS PROCURED BY SPECIFICATION MS-44A.
5. DELETED

FSAR FIGURE 9.3-7

THIS DRAWING CREATED ELECTRONICALLY

CLASS II

LUMINANT
CPNPP
GLEN ROSE, TEXAS

VENTS & DRAINS SYSTEM
FLOW DIAGRAM
AUXILIARY BUILDING LEAK-OFFS

DWG. NO.	SH. NO.	REV.
M1-0236	04	CP-15

$$$$$$$DATE$$$$$$$

me903600.dgn A M1-0236-04 B C D E F G < FINAL PRINT > H

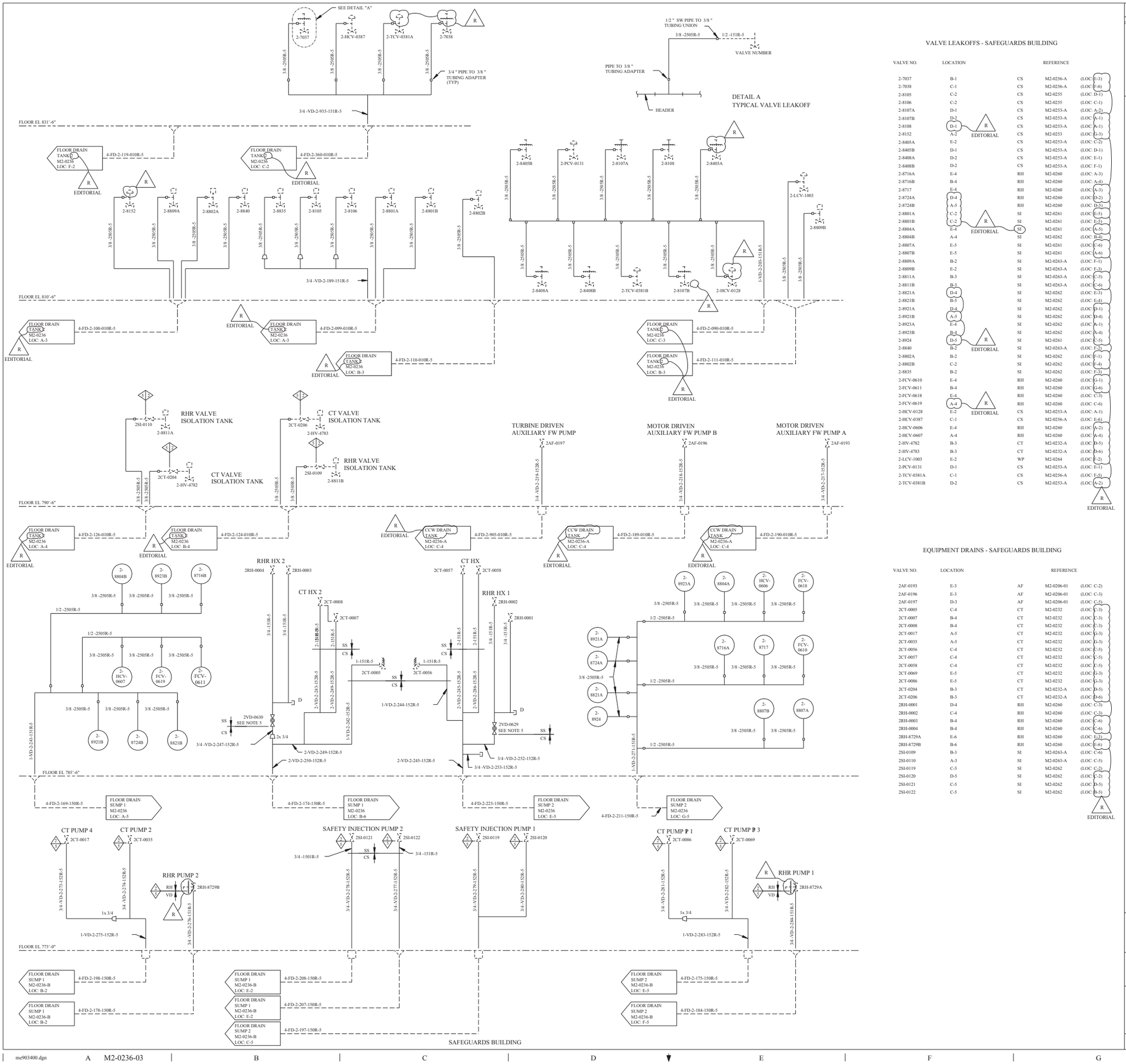

VALVE LEAKOFFS - SAFEGUARDS BUILDING

VALVE NO.	LOCATION		REFERENCE	
2-7037	B-1	CS	M2-0256-A	(LOC: E-3)
2-7038	C-1	CS	M2-0256-A	(LOC: F-6)
2-8105	C-2	CS	M2-0255	(LOC: D-1)
2-8106	C-2	CS	M2-0255	(LOC: C-1)
2-8107A	D-1	CS	M2-0253-A	(LOC: A-2)
2-8107B	D-2	CS	M2-0253-A	(LOC: A-1)
2-8108	D-1	CS	M2-0253-A	(LOC: A-1)
2-8152	A-2	CS	M2-0253	(LOC: G-3)
2-8405A	E-2	CS	M2-0253-A	(LOC: C-2)
2-8405B	D-1	CS	M2-0253-A	(LOC: D-1)
2-8408A	D-2	CS	M2-0253-A	(LOC: E-1)
2-8408B	D-2	CS	M2-0253-A	(LOC: F-1)
2-8716A	E-4	RH	M2-0260	(LOC: A-3)
2-8716B	B-4	RH	M2-0260	(LOC: A-4)
2-8717	E-4	RH	M2-0260	(LOC: A-3)
2-8724A	D-4	RH	M2-0260	(LOC: D-2)
2-8724B	A-5	RH	M2-0260	(LOC: D-5)
2-8801A	C-2	SI	M2-0261	(LOC: C-5)
2-8801B	C-2	SI	M2-0261	(LOC: E-5)
2-8804A	E-4	SI	M2-0261	(LOC: A-5)
2-8804B	A-4	SI	M2-0262	(LOC: B-4)
2-8807A	E-5	SI	M2-0261	(LOC: C-6)
2-8807B	E-5	SI	M2-0261	(LOC: A-6)
2-8809A	B-2	SI	M2-0263-A	(LOC: F-1)
2-8809B	E-2	SI	M2-0263-A	(LOC: F-3)
2-8811A	B-3	SI	M2-0263-A	(LOC: C-5)
2-8811B	B-3	SI	M2-0263-A	(LOC: C-6)
2-8821A	D-4	SI	M2-0262	(LOC: E-3)
2-8821B	B-5	SI	M2-0262	(LOC: E-4)
2-8921A	D-4	SI	M2-0262	(LOC: D-1)
2-8921B	A-5	SI	M2-0262	(LOC: D-4)
2-8923A	E-4	SI	M2-0262	(LOC: A-1)
2-8923B	B-4	SI	M2-0262	(LOC: A-4)
2-8924	D-5	SI	M2-0261	(LOC: C-5)
2-8840	B-2	SI	M2-0263-A	(LOC: F-2)
2-8802A	B-2	SI	M2-0262	(LOC: F-1)
2-8802B	C-2	SI	M2-0262	(LOC: F-4)
2-8835	B-2	SI	M2-0262	(LOC: F-3)
2-FCV-0610	E-4	RH	M2-0260	(LOC: G-1)
2-FCV-0611	B-4	RH	M2-0260	(LOC: G-6)
2-FCV-0618	E-4	RH	M2-0260	(LOC: C-3)
2-FCV-0619	A-4	RH	M2-0260	(LOC: C-6)
2-HCV-0128	E-2	CS	M2-0253-A	(LOC: A-1)
2-HCV-0387	C-1	CS	M2-0256-A	(LOC: E-6)
2-HCV-0606	E-4	RH	M2-0260	(LOC: A-2)
2-HCV-0607	A-4	RH	M2-0260	(LOC: A-4)
2-HV-4782	B-3	CT	M2-0232-A	(LOC: D-5)
2-HV-4783	B-3	CT	M2-0232-A	(LOC: D-6)
2-LCV-1003	E-2	WP	M2-0264	(LOC: C-2)
2-PCV-0131	D-1	CS	M2-0253-A	(LOC: E-1)
2-TCV-0381A	C-1	CS	M2-0256-A	(LOC: E-5)
2-TCV-0381B	D-2	CS	M2-0253-A	(LOC: A-2)

EQUIPMENT DRAINS - SAFEGUARDS BUILDING

VALVE NO.	LOCATION		REFERENCE	
2AF-0193	E-3	AF	M2-0206-01	(LOC: C-2)
2AF-0196	E-3	AF	M2-0206-01	(LOC: C-3)
2AF-0197	D-3	AF	M2-0206-01	(LOC: C-5)
2CT-0005	C-4	CT	M2-0232	(LOC: C-3)
2CT-0007	B-4	CT	M2-0232	(LOC: C-3)
2CT-0008	B-4	CT	M2-0232	(LOC: C-3)
2CT-0017	A-5	CT	M2-0232	(LOC: G-3)
2CT-0035	A-5	CT	M2-0232	(LOC: G-3)
2CT-0056	C-4	CT	M2-0232	(LOC: C-5)
2CT-0057	C-4	CT	M2-0232	(LOC: C-5)
2CT-0058	C-4	CT	M2-0232	(LOC: C-5)
2CT-0069	E-5	CT	M2-0232	(LOC: G-3)
2CT-0086	E-5	CT	M2-0232	(LOC: G-3)
2CT-0204	B-3	CT	M2-0232-A	(LOC: D-5)
2CT-0206	B-3	CT	M2-0232-A	(LOC: D-6)
2RH-0001	D-4	RH	M2-0260	(LOC: C-3)
2RH-0002	C-4	RH	M2-0260	(LOC: C-3)
2RH-0003	B-4	RH	M2-0260	(LOC: C-6)
2RH-0004	B-4	RH	M2-0260	(LOC: C-6)
2RH-8729A	E-6	RH	M2-0260	(LOC: E-3)
2RH-8729B	B-6	RH	M2-0260	(LOC: E-6)
2SI-0109	B-3	SI	M2-0263-A	(LOC: C-6)
2SI-0110	A-3	SI	M2-0263-A	(LOC: C-5)
2SI-0119	C-5	SI	M2-0262	(LOC: C-2)
2SI-0120	D-5	SI	M2-0262	(LOC: C-2)
2SI-0121	C-5	SI	M2-0262	(LOC: D-5)
2SI-0122	C-5	SI	M2-0262	(LOC: B-5)

REV	DWN	CHKD	APVD	REMARKS
CP-16	DLK 08-11 2008	MM 08-13 2008		THIS DRAWING REVISED TO INCORPORATE DESIGN CHANGE FDA 2008-002198-01-00 PER SK-0001-08-002198-01-00. EDITORIAL CHANGES AS NOTED.

NOTES:

1. FOR MECHANICAL SYMBOLS AND NOTES SEE DRAWING M1-0200.
2. FOR TYPICAL DRAIN SYMBOLS, SEE DRAWING M2-0238 NOTE 3.
3. PIPING DESIGNATED FD IS PROCURED BY SPECIFICATION MS-73 AND PIPING DESIGNATED VD IS PROCURED BY SPECIFICATION MS-43B AND MS-44B.
4. DELETED
5. VALVES 2VD-0629 AND 2VD-0630 ARE THE NORMAL DRAIN PATH FOR RHR HEAT EXCHANGER DRAINING.
6. DELETED

FSAR FIGURE 9.3-7

THIS DRAWING CREATED ELECTRONICALLY

CLASS II

LUMINANT
CPNPP
GLEN ROSE, TEXAS

FLOW DIAGRAM
VENTS AND DRAINS SYSTEM
SAFEGUARDS BUILDING

DWG. NO.	SH. NO.	REV.
M2-0236	03	CP-16

< FINAL PRINT >

SSSSSSDATESSSSS REF: CHKD 04-28-2003

me903400.dgn A M2-0236-03

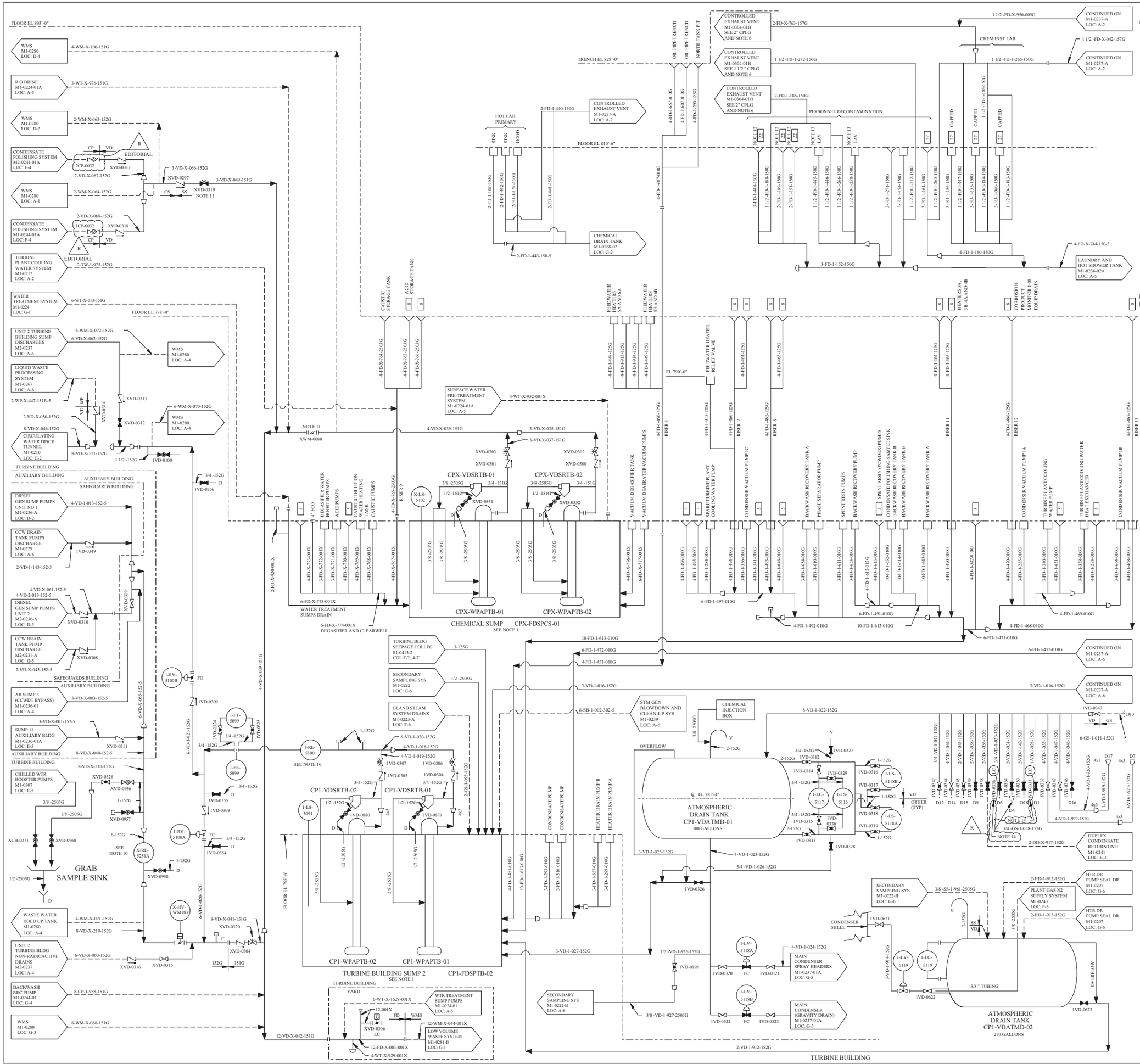

REV	DWN	CHKD	APVD	REMARKS
CP-49	DLK 10-13-2009	GAW 10-16-2009		THIS DRAWING REVISED TO INCORPORATE DESIGN CHANGE FDA 2009-003957-01-00 PER SK-0005-09-003957-01-00. EDITORIAL CHANGES AS NOTED

NOTES:

1. FOR SWITCH LEVEL SYSTEM AND PUMP CONTROL SEE TYPICAL SUMP DETAIL, LOCATION H-3 THIS DRAWING.
2. THE BOXED IN NUMBERS DESIGNATE THE SPECIFIC ROOM NUMBERS ON THE PLUMBING DRAWINGS SHOWING VARIOUS DRAIN LOCATIONS.
3. FOR DRAIN SYMBOLS SEE DRAWING M1-0236 NOTE 4.
4. FOR MECHANICAL SYMBOLS AND NOTES SEE M1-0200.
5. ALL PIPING IS NON-NUCLEAR SAFETY CLASS.
6. PIPING DESIGNATED FD IS PROCURED BY SPECIFICATION MS-73 AND PIPING DESIGNATED VD IS PROCURED BY SPECIFICATION MS-44A.
7. TURBINE BUILDING SUMP 1 HAS AN AIRTIGHT COVER WITH A VENT LINE, PENETRATING THE COVER.
8. PIPING DESIGNATED FD IS PROCURED BY SPECIFICATION MS-73. PIPING DESIGNATED VD IS PROCURED BY SPECIFICATIONS MS-43A AND MS-43B.
9. DELETED
10. "ADJACENT-TO-LINE" RADIATION DETECTOR.
11. VALVE POSITION IS PROCEDURALLY CONTROLLED BY OPERATIONS/RADWASTE AND MAY BE OPEN OR CLOSED DEPENDING ON PLANT CONDITIONS AND EFFLUENT SAMPLE RESULTS.
12. FLOOR DRAINS PLUGGED BY NON-SHRINK GROUT.
13. LAV DRAINS TO BE CAPPED.
14. VALVES 1VD-0331 AND 1VD-0336 ARE LOCKED CLOSED TO ISOLATE THE ABANDONED IN PLACE ELECTRIC AUXILIARY BOILER.

R

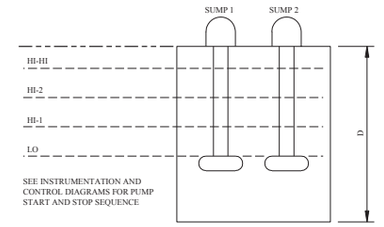

TYPICAL SUMP DETAIL

SUMP NUMBER	D	LO	HI-1	HI-2	HI-HI
1	4'-6"	1'-0"	1'-9"	3'-0"	4'-0"
2	3'-5"	1'-0"	2'-6"	2'-8"	3'-0"
CHEMICAL	11'-11"	3'-4"	5'-10"	6'-8"	10'-0"

ACTUATOR LEVELS
(MEASURED FROM SUMP BOTTOM)

ATMOSPHERIC DRAIN TANK DRAIN REFERENCE
(SEE LOCATION F-5 AND G-5 THIS DRAWING)

DRAIN NUMBER	REFERENCE
D1	AUXILIARY BOILER FW PUMP DISCHARGE M1-0213-A, LOC: G-5
D4	ACPSI CONNECTION NO T18 M1-0223, LOC: G-4
D6	AUXILIARY BOILER CIRC PUMP COOLING WATER DRAIN M1-0213-A, LOC: G-5
D7	SG FEEDWATER PUMP 1-B PRIMARY STUFFING BOX LEAKAGE CONNECTION M1-0203, LOC: B-6
D9	SPARE CONNECTION
D12	CV AND WBP SYSTEM, MAIN CONDENSER VACUUM BREAKER SEALS M1-0211, LOC: G-1
D13	GLAND STEAM CONDENSER M1-0223, LOC: G-6
D14	AUXILIARY GLAND STEAM CONDENSER M1-0223-A LOC: F-6
D15	PRIMARY SAMPLING SYSTEM M1-0228-C, LOC: F-5
D16	SPARE CONNECTION
D17	SG FEEDWATER PUMP 1-A PRIMARY STUFFING BOX LEAKAGE CONNECTION M1-0203, LOC: B-3
D18	AUXILIARY STEAM DRAIN PUMPS DISCHARGE M1-0213-01, LOC: G-4

DRAWING 2323-M1-0237 REV CP-6
HAS BEEN SPLIT INTO THE FOLLOWING SHEETS:
M1-0237
M1-0237-A

CLASS II

LUMINANT
CPNPP
GLEN ROSE, TEXAS

FLOW DIAGRAM
VENTS AND DRAINS SYSTEM
TURBINE AND FUEL HANDLING BUILDING

DWG NO. M1-0237 | SH. NO. - | REV. CP-49

FSAR FIGURE 9.3-8

THIS DRAWING CREATED ELECTRONICALLY

mel03120.dgn A M1-0237 B C D E F G FINAL PRINT H

REV	DWN	CHKD	APVD	REMARKS
CP-14	MM 10-07-2004	DLK 10-07-2004		THIS DRAWING REVISED TO INCORPORATE DESIGN CHANGE FDA-2002-002767-01-00 PER SK-0008-02-002767-01-00. EDITORIAL CHANGES AS NOTED.

NOTES:

1. FOR SWITCH LEVEL SYSTEM AND PUMP CONTROL SEE TYPICAL SUMP DETAIL, LOCATION H-3 THIS DRAWING.
2. THE BOXED IN NUMBERS DESIGNATE THE SPECIFIC ROOM NUMBERS ON THE PLUMBING DRAWINGS SHOWING VARIOUS DRAIN LOCATIONS.
3. FOR DRAIN SYMBOLS SEE DRAWING M1-0236 NOTE 4.
4. FOR MECHANICAL SYMBOLS AND NOTES SEE M1-0200. **0200**.
5. **PIPING DESIGNATED FD IS PROCURED BY SPECIFICATION MS-73** AND PIPING DESIGNATED VD IS PROCURED BY SPECIFICATION MS-44A.
6. TURBINE BUILDING SUMP 1 HAS AN AIRTIGHT COVER WITH A VENT LINE, PENETRATING THE COVER.
7. PIPING DESIGNATED FD IS PROCURED BY SPECIFICATION MS-73. PIPING DESIGNATED VD IS PROCURED BY SPECIFICATIONS MS-43A AND MS-43B.

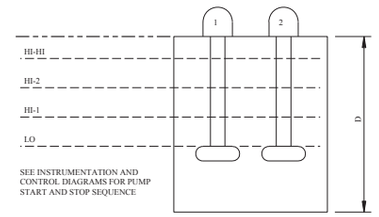

SEE INSTRUMENTATION AND CONTROL DIAGRAMS FOR PUMP START AND STOP SEQUENCE

TYPICAL SUMP DETAIL

SUMP NUMBER	D	LO	HI-1	HI-2	HI-HI
1	4'-6"	1'-0"	1'-9"	3'-0"	4'-0"
2	3'-5"	1'-0"	2'-6"	2'-8"	3'-0"
CHEMICAL	11'-11"	5'-0"	7'-6"	8'-9"	10'-0"

ACTUATOR LEVELS
(MEASURED FROM SUMP BOTTOM)

FSAR FIGURE 9.3-8

THIS DRAWING CREATED ELECTRONICALLY

DRAWING 2323-M1-0237 REV CP-6
HAS BEEN SPLIT INTO THE FOLLOWING SHEETS:
M1-0237
M1-0237-A

CLASS II

TXU POWER
CPSES
GLEN ROSE, TEXAS

FLOW DIAGRAM
VENTS AND DRAINS SYSTEM
TURBINE BUILDING

DWG. NO. M1-0237 | SH. NO. A | REV. CP-14

me608300.dgn | A M1-0237-A | FINAL PRINT

ATMOSPHERIC DRAIN TANK DRAIN REFERENCE

(SEE LOCATION F-5 AND G-5 THIS DRAWING)

DRAIN NUMBER	REFERENCE	DRAIN NUMBER	REFERENCE
D1	AUXILIARY BOILER FW PUMP DISCHARGE M1-0213-A, LOC: G-5		
		D12	CV AND WBP SYSTEM, MAIN CONDENSER VACUUM BREAKER SEALS M2-0211, LOC: G-1
		D13	GLAND STEAM CONDENSER M2-0223, LOC: F-6
D4	SPARE CONNECTION	D14	AUXILIARY GLAND STEAM CONDENSER M2-0223, LOC: C-6
		D15	PRIMARY SAMPLING SYSTEM M2-0228-C, LOC: G-5
		D16	SG FEEDWATER PUMP 2-A STUFFING LEAKAGE M2-0203 LOC: A-4
D7	SPARE CONNECTION	D17	SG FEEDWATER PUMP 2-B STUFFING LEAKAGE M2-0203 LOC: A-6
D8	SPARE CONNECTION	D18	AUXILIARY STEAM DRAIN PUMPS DISCHARGE M1-0813-01 LOC: C-5
D9	SPARE CONNECTION		

REV	DWN	CHKD	APVD	REMARKS
CP-20	DLK 06-09-2016	MHF 06-09-2016		THIS DRAWING REVISED TO INCORPORATE DESIGN CHANGE FDA 2016-000106-01-00 PER SK-0001-16-000106-01-00.

NOTES:

1. THE BOXED-IN NUMBERS DESIGNATE THE SPECIFIC ROOM NUMBERS ON THE PLUMBING DRAWINGS SHOWING VARIOUS DRAIN LOCATIONS.
2. FOR TYPICAL DRAIN SYMBOLS SEE DRAWING M2-0238 NOTE 3.
3. FOR MECHANICAL SYMBOLS AND NOTES SEE DRAWING M1-0200.
4. PIPING DESIGNATED FD IS PROCURED BY SPECIFICATION MS-73 AND PIPING DESIGNATED VD IS PROCURED BY SPECIFICATION MS-44A, MS-43A AND MS-43B.
5. "ADJACENT-TO-LINE" RADIATION DETECTOR.
6. VALVE 2VD-0331 IS LOCKED CLOSED TO ISOLATE THE ABANDONED IN PLACE ELECTRIC AUXILIARY BOILER.

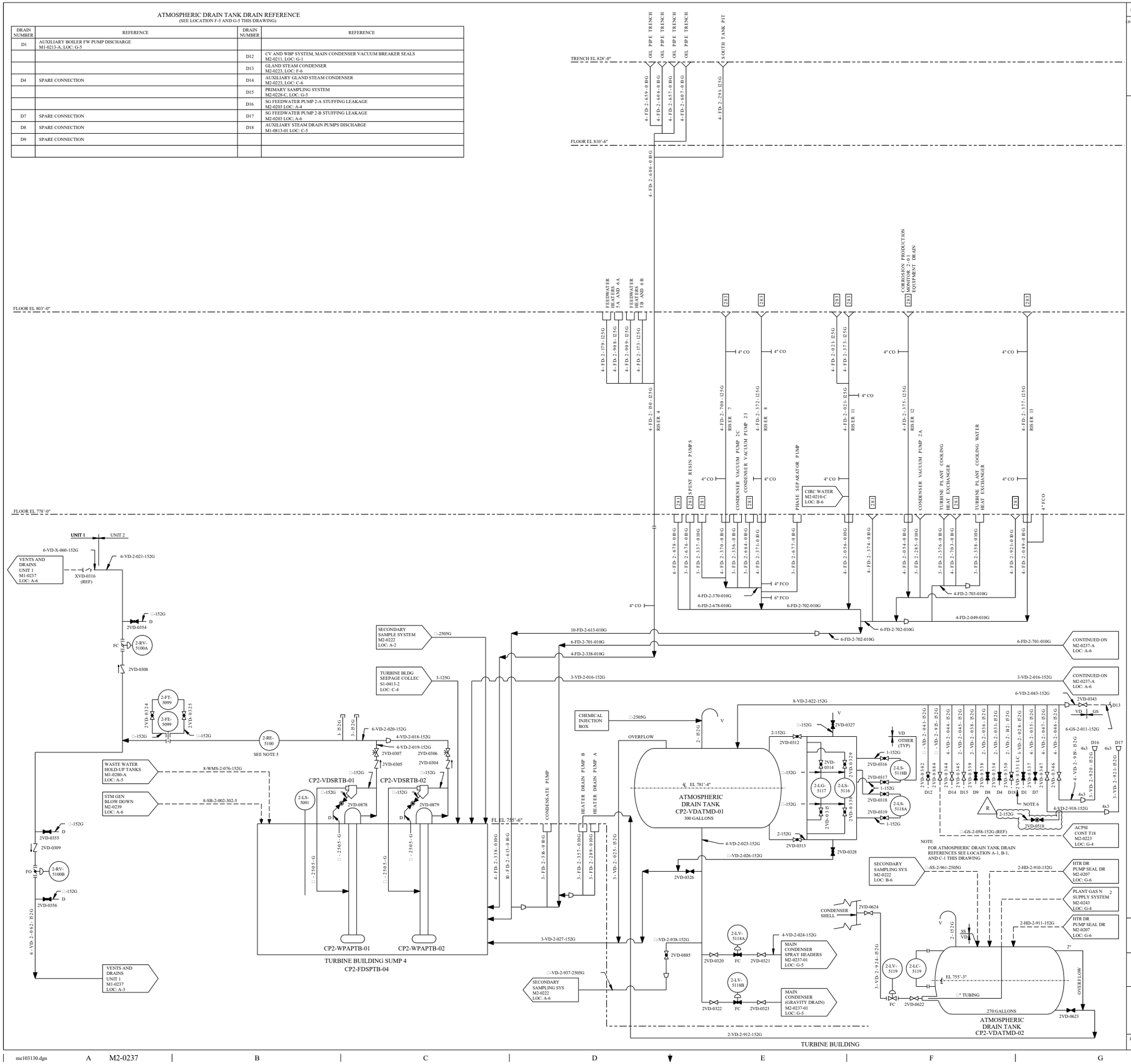

DRAWING 2323-M2-0237 REV CP-3
HAS BEEN SPLIT INTO THE FOLLOWING SHEETS:

M2-0237
M2-0237-A

NON–SAFETY

LUMINANT
CPNPP
GLEN ROSE, TEXAS

FLOW DIAGRAM
VENTS AND DRAINS SYSTEM
TURBINE AND FUEL HANDLING BUILDING

DWG. NO. M2-0237 | SH. NO. - | REV. CP-20

FINAL PRINT

FSAR FIGURE 9.3-8

THIS DRAWING CREATED ELECTRONICALLY

me103130.dgn

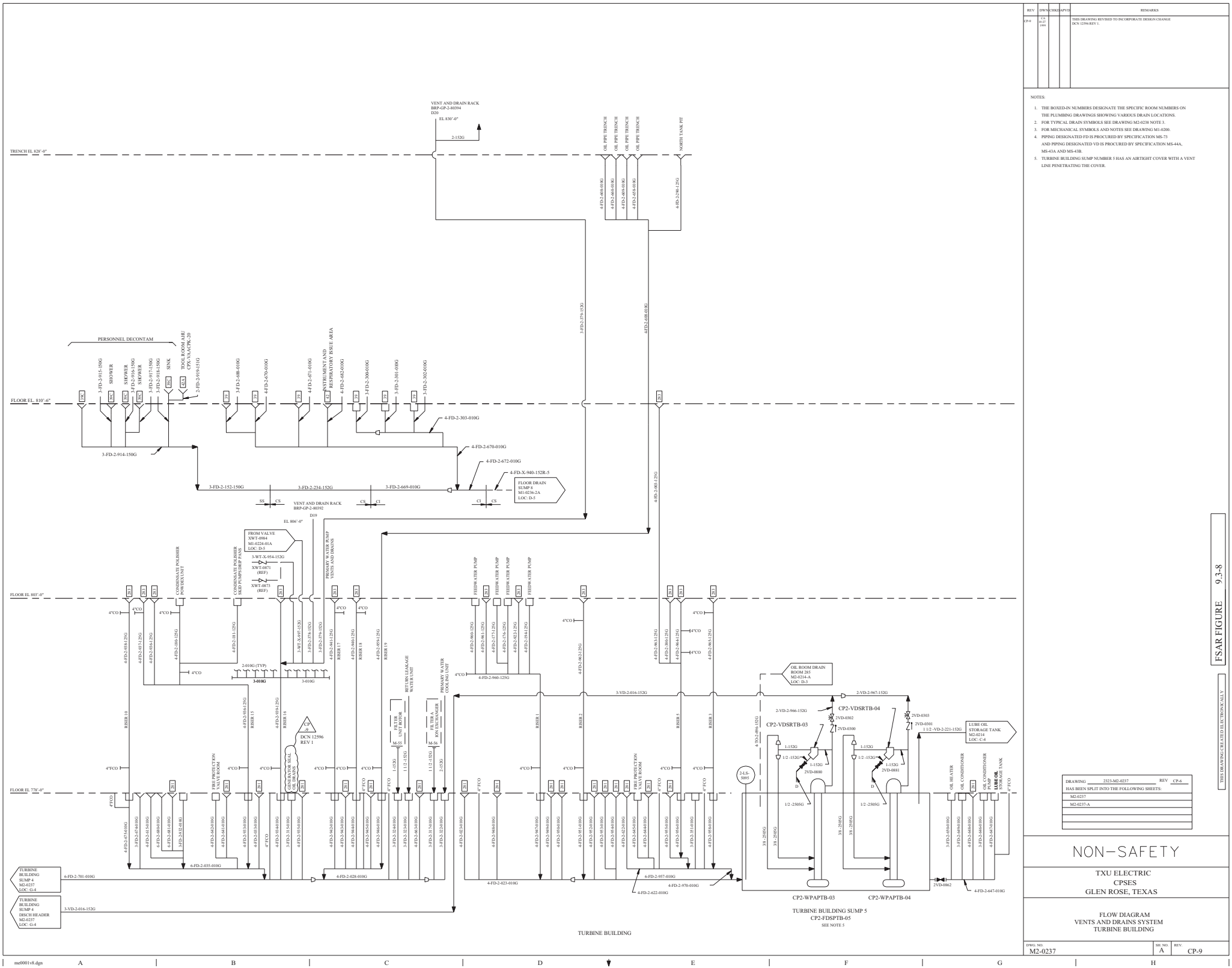

REV	DWN	CHKD	APVD	REMARKS
CP-9	S.A. 10-17-1995			THIS DRAWING REVISED TO INCORPORATE DESIGN CHANGE DCN 12596 REV 1.

NOTES:

1. THE BOXED-IN NUMBERS DESIGNATE THE SPECIFIC ROOM NUMBERS ON THE PLUMBING DRAWINGS SHOWING VARIOUS DRAIN LOCATIONS.
2. FOR TYPICAL DRAIN SYMBOLS SEE DRAWING M2-0238 NOTE 3.
3. FOR MECHANICAL SYMBOLS AND NOTES SEE DRAWING M1-0200.
4. PIPING DESIGNATED FD IS PROCURED BY SPECIFICATION MS-73 AND PIPING DESIGNATED VD IS PROCURED BY SPECIFICATION MS-44A, MS-43A AND MS-43B.
5. TURBINE BUILDING SUMP NUMBER 5 HAS AN AIRTIGHT COVER WITH A VENT LINE PENETRATING THE COVER.

FSAR FIGURE 9.3-8

THIS DRAWING CREATED ELECTRONICALLY

DRAWING	2323-M2-0237	REV	CP-6
HAS BEEN SPLIT INTO THE FOLLOWING SHEETS:			
M2-0237			
M2-0237-A			

NON–SAFETY

TXU ELECTRIC
CPSES
GLEN ROSE, TEXAS

FLOW DIAGRAM
VENTS AND DRAINS SYSTEM
TURBINE BUILDING

DWG. NO.	SH. NO.	REV.
M2-0237	A	CP-9

me0001v8.dgn

SSSSSSSTA ITESSSSS

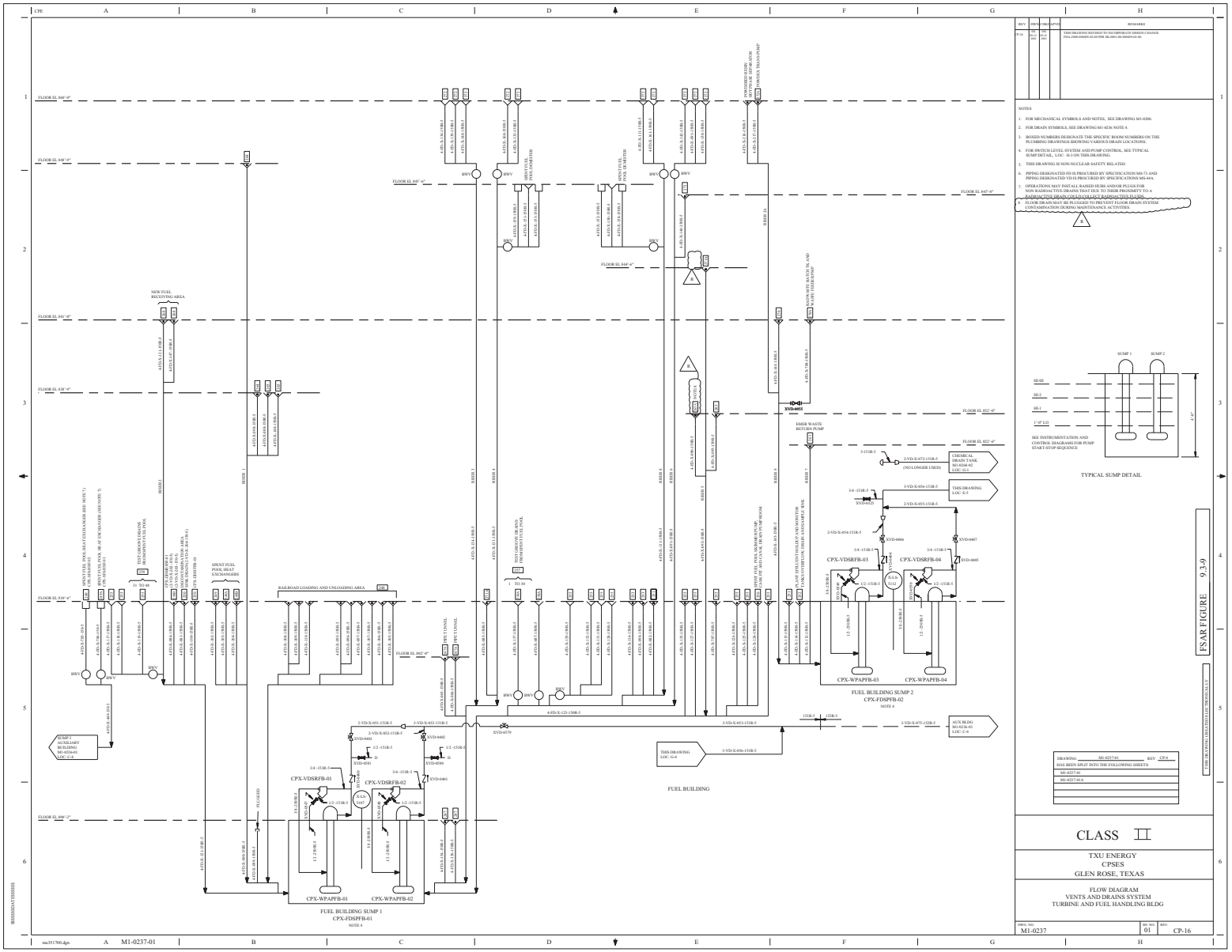
FLOOR EL 840'-0"
FLOOR EL 840'-6"
FLOOR EL 845'-6"
FLOOR EL 844'-6"
FLOOR EL 841'-6"
FLOOR EL 838'-6"
FLOOR EL 822'-6"
FLOOR EL 817'-6"
FLOOR EL 802'-9"
FLOOR EL 800'-3"
NEW FUEL RECEIVING AREA
SPENT FUEL POOL HEAT EXCHANGERS
RAILROAD LOADING AND UNLOADING AREA
EMER WASTE RETURN PUMP
FLOODED
CPX-VDSRFB-01
CPX-VDSRFB-02
CPX-VDSRFB-03
CPX-VDSRFB-04
CPX-WPAPFB-01
CPX-WPAPFB-02
CPX-WPAPFB-03
CPX-WPAPFB-04
FUEL BUILDING SUMP 1
CPX-FDSPFB-01
NOTE 4
FUEL BUILDING SUMP 2
CPX-FDSPFB-02
NOTE 4
FUEL BUILDING
XVD-0455
XVD-0456
XVD-0457
XVD-0458
XVD-0459
XVD-0460
XVD-0461
XVD-0462
XVD-0463
XVD-0464
XVD-0465
XVD-0466
XVD-0467
XVD-0468
XVD-0469
XVD-0470
XVD-0471
XVD-0472
XVD-0473
XVD-0474
XVD-0475
XVD-0476
XVD-0477
XVD-0478
XVD-0479
XVD-0480
XVD-0481
XVD-0482
XVD-0483
XVD-0484
XVD-0485
XVD-0486
XVD-0487
XVD-0488
XVD-0489
XVD-0490
XVD-0491
XVD-0492
XVD-0493
XVD-0494

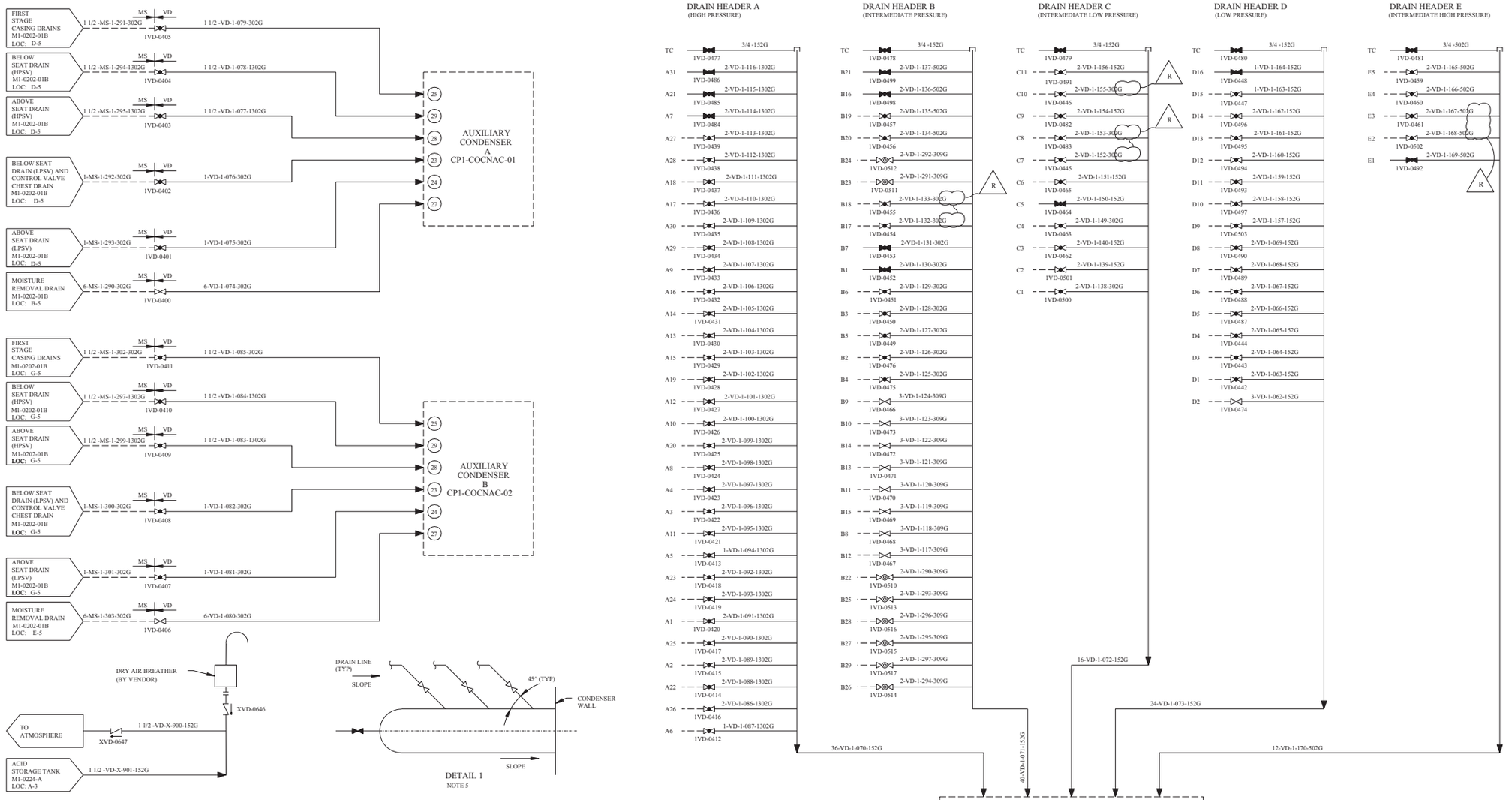

DRAIN NO.	REFERENCE	DRAIN NO.	REFERENCE	DRAIN NO.	REFERENCE	DRAIN NO.		DRAIN NO.	REFERENCE	DRAIN NO.	REFERENCE	DRAIN NO.	REFERENCE
A1	HOT REHEAT LINE DRAIN POT 1-MS-08 M1-0202-01A, LOC: A-4	A22	HP TURBINE S AND CV DRAIN T2 M1-0202-01, LOC: G-3	B1	SPARE CONNECTION	B22	COLD REHEAT DRAIN M1-0202-01A, LOC: B-6	C1	TURBINE GLAND STEAM LINE DRAIN POT 1-GS-04 M1-0223, LOC: E-4	D1	TURBINE GLAND STEAM LINE DRAIN POT 1-GS-03 M1-0223, LOC: F-3	E1	SPARE CONNECTION
A2	HOT REHEAT LINE DRAIN POT 1-MS-07 M1-0202-01A, LOC: A-5	A23	HP TURBINE S AND CV DRAIN T2 M1-0202-01, LOC: A-4	B2	14" LP STM SUPPLY LINE TO STM GEN FEED PUMP TURB M1-0202-01B, LOC: F-6	B23	COLD REHEAT DRAIN M1-0202-01A, LOC: B-3	C2	AUX STEAM LINE DRAIN POT 1-SA-05,08 M1-0213, LOC: C-5	D2	TURBINE GLAND STEAM SYSTEM, T12 M1-0223, LOC: G-2	E2	EXTRACTION STEAM LINE DRAIN POT 1-EX-03 M1-0205, LOC: F-2
A3	HOT REHEAT LINE DRAIN POT 1-MS-06 M1-0202-01A, LOC: A-1	A24	HP TURBINE S AND CV DRAIN T2 M1-0202-01, LOC: G-4	B3	14" LP STM SUPPLY LINE TO STM GEN FEED PUMP TURB M1-0202-01B, LOC: B-6	B24	COLD REHEAT DRAIN M1-0202-01A, LOC: A-3	C3	AUX STEAM LINE DRAIN POT 1-SA-03,09 M1-0213, LOC: B-4	D3	TURBINE GLAND STEAM LINE DRAIN POT 1-GS-02 M1-0223, LOC: D-3	E3	EXTRACTION STEAM LINE DRAIN POT 1-EX-01 M1-0205, LOC: D-2
A4	HOT REHEAT LINE DRAIN POT 1-MS-05 M1-0202-01A, LOC: A-2	A25	HP TURBINE S AND CV DRAIN T2 M1-0202-01, LOC: A-3	B4	14" LP STM SUPPLY LINE TO STM GEN FEED PUMP TURB M1-0202-01B, LOC: D-6	B25	COLD REHEAT DRAIN M1-0202-01A, LOC: B-5	C4	AUX STEAM LINE DRAIN POT 1-SA-02 M1-0213, LOC: A-6	D4	TURBINE GLAND STEAM LINE DRAIN POT 1-GS-01 M1-0223, LOC: G-4	E4	EXTRACTION STEAM LINE DRAIN POT 1-EX-04 M1-0205, LOC: F-2
A5	HOT REHEAT DRAIN, T14 M1-0202-01A, LOC: A-4	A26	HP TURBINE S AND CV DRAIN T3 M1-0202-01, LOC: G-3	B5	14" LP STM SUPPLY LINE TO STM GEN FEED PUMP TURB M1-0202-01B, LOC: G-6	B26	COLD REHEAT DRAIN M1-0202-01A, LOC: D-6	C5	SPARE CONNECTION	D5	TURBINE GLAND STEAM LINE DRAIN POT 1-GS-05 M1-0223, LOC: A-4	E5	EXTRACTION STEAM LINE DRAIN POT 1-EX-02 M1-0205, LOC: D-1
A6	HOT REHEAT DRAIN, T14 M1-0202-01A, LOC: A-1	A27	32" MAIN STEAM LINE DRAIN POT 1-MS-23 M1-0202, LOC: C-2	B6	14" LP STM SUPPLY LINE TO STM GEN FEED PUMP TURB M1-0202-01B, LOC: E-6	B27	COLD REHEAT DRAIN M1-0202-01A, LOC: D-3	C6	EXTRACTION STEAM LINE DRAIN POT 1-EX-17 M1-0205, LOC: G-4	D6	AUX STEAM LINE DRAIN POT X-SA-06 M1-0213, LOC: E-6		
A7	SPARE CONNECTION	A28	32" MAIN STEAM LINE DRAIN POT 1-MS-24 M1-0202, LOC: C-3	B7	SPARE CONNECTION	B28	COLD REHEAT DRAIN M1-0202-01A, LOC: D-3	C7	EXTRACTION STEAM LINE DRAIN POT 1-EX-10 M1-0205, LOC: D-5	D7	AUX STEAM LINE DRAIN POT X-SA-07 M1-0213, LOC: E-5		
A8	34" MAIN STEAM LINE DRAIN POT 1-MS-04 M1-0202-01, LOC: A-5	A29	32" MAIN STEAM LINE DRAIN POT 1-MS-25 M1-0202, LOC: C-4	B8	COLD REHEAT DRAIN T7 M1-0202-01A, LOC: E-3	B29	COLD REHEAT DRAIN M1-0202-01A, LOC: D-5	C8	EXTRACTION STEAM LINE DRAIN POT 1-EX-11 M1-0205, LOC: G-5	D8	AUX STEAM LINE DRAIN POT X-SA-04 M1-0213, LOC: D-4		
A9	34" MAIN STEAM LINE DRAIN POT 1-MS-01 M1-0202-01, LOC: G-2	A30	32" MAIN STEAM LINE DRAIN POT 1-MS-26 M1-0202, LOC: C-5	B9	COLD REHEAT DRAIN T6 M1-0202-01A, LOC: C-3			C9	EXTRACTION STEAM LINE DRAIN POT 1-EX-09 M1-0205, LOC: D-4	D9	AUX STEAM LINE DRAIN POT 1-SA-01 M1-0213, LOC: A-6		
A10	34" MAIN STEAM LINE DRAIN POT 1-MS-02 M1-0202-01, LOC: A-2	A31	SPARE CONNECTION	B10	COLD REHEAT DRAIN T6 M1-0202-01A, LOC: C-6			C10	EXTRACTION STEAM LINE DRAIN POT 1-EX-12 M1-0205, LOC: G-5	D10	LEAKOFF VALVE FROM SG FEED TURB SEAL STM HDR M1-0223, LOC: A-3		
A11	34" MAIN STEAM LINE DRAIN POT 1-MS-03 M1-0202-01, LOC: G-5			B11	COLD REHEAT DRAIN T7 M1-0202-01A, LOC: E-6			C11	AUX STEAM LINE DRAIN POT X-SA-11,12 M1-0213, LOC: F-2	D11	EXTRACTION STEAM LINE DRAIN POT 1-EX-16 M1-0205-A, LOC: G-6		
A12	3" AUX. STEAM LINE DRAIN POT 1-MS-28 M1-0202-01B, LOC: A-5			B12	COLD REHEAT DRAIN T7 M1-0202-01A, LOC: E-3					D12	EXTRACTION STEAM LINE DRAIN POT 1-EX-14 M1-0205-A, LOC: G-5		
A13	26" STEAM DUMP HEADER DRAIN POT 1-MS-22 M1-0202-01B, LOC: B-3			B13	COLD REHEAT DRAIN T6 M1-0202-01A, LOC: C-3					D13	EXTRACTION STEAM LINE DRAIN POT 1-EX-15 M1-0205-A, LOC: G-6		
A14	26" STEAM DUMP HEADER DRAIN POT 1-MS-13 M1-0202-01B, LOC: F-2			B14	COLD REHEAT DRAIN T6 M1-0202-01A, LOC: C-6					D14	EXTRACTION STEAM LINE DRAIN POT 1-EX-13 M1-0205-A, LOC: G-6		
A15	6" SG FW PUMP TURB STM SUPPLY DRAIN POT 1-MS-20 M1-0202-01B, LOC: C-5			B15	COLD REHEAT DRAIN T7 M1-0202-01A, LOC: E-6					D15	AUX STEAM LINE DRAIN POT X-SA-10 M1-0213, LOC: B-4		
A16	6" SG FW PUMP TURB STM SUPPLY DRAIN POT 1-MS-19 M1-0202-01B, LOC: E-4			B16	SPARE CONNECTION					D16	SPARE CONNECTION		
A17	34" MAIN STEAM LINE STRAINER DR POT 1-MS-12 M1-0202-01, LOC: G-2			B17	EXTRACTION STEAM LINE DRAIN POT 1-EX-08 M1-0205, LOC: F-4								
A18	34" MAIN STEAM LINE STRAINER DR POT 1-MS-11 M1-0202-01, LOC: A-2			B18	EXTRACTION STEAM LINE DRAIN POT 1-EX-06 M1-0205, LOC: D-3								
A19	34" MAIN STEAM LINE STRAINER DR POT 1-MS-10 M1-0202-01, LOC: A-6			B19	EXTRACTION STEAM LINE DRAIN POT 1-EX-07 M1-0205, LOC: G-4								
A20	34" MAIN STEAM LINE STRAINER DR POT 1-MS-09 M1-0202-01, LOC: G-6			B20	EXTRACTION STEAM LINE DRAIN POT 1-EX-05 M1-0205, LOC: D-3								
A21	SPARE CONNECTION			B21	SPARE CONNECTION								

MAIN CONDENSER 1-A DRAIN REFERENCES

REV	DWN	CHKD	APVD	REMARKS
CP-11	SM 10-09 2007	JRM 10-09 2007		THIS DRAWING REVISED TO INCORPORATE DESIGN CHANGE FDA 2004-003813-01-00 PER SK-0004-04-003813-01-00.

NOTES:

1. GENERAL NOTES AND SYMBOLS SEE DWG M1-0200.
2. CIRCLED NUMBERS REPRESENT CONDENSER PENETRATION NUMBERS.
3. T NUMBERS, SUCH AS T16, DESIGNATE UPC CONNECTION NUMBERS.
4. CAPS ON SPARE DRAIN CONNECTIONS SHALL BE THREADED.
5. ALL DRAIN HEADERS SHALL BE SLOPED TOWARDS THE CONDENSER.
6. DRAIN VALVES SHALL BE LOCATED AS CLOSE AS POSSIBLE TO DRAIN HEADERS.
7. EXCEPT FOR SPARE CONNECTIONS, ALL DRAIN VALVES SHALL BE LOCKED OPEN.

FSAR FIGURE 9.3-9

THIS DRAWING CREATED ELECTRONICALLY

DRAWING 2323-M1-0237-01 REV CP-4
HAS BEEN SPLIT INTO THE FOLLOWING SHEETS:
M1-0237-01
M1-0237-01A

NON–SAFETY

LUMINANT
CPSES
GLEN ROSE, TEXAS

FLOW DIAGRAM
VENTS AND DRAINS SYSTEM
TURBINE BUILDING

DWG NO. M1-0237 | SH. NO. 01A | REV. CP-11

me839800.dgn A M1-0237-01A B C D E F G FINAL PRINT H

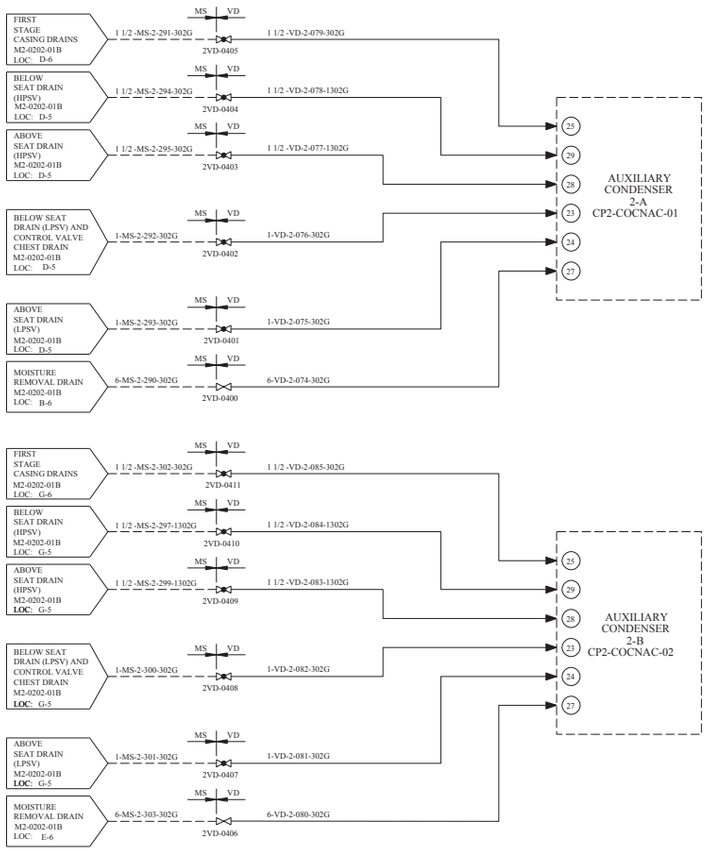

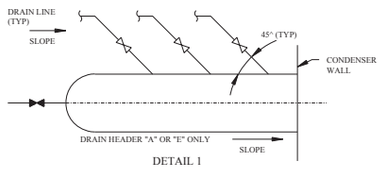

DETAIL 1
NOTE 7



DRAIN NO.	REFERENCE	DRAIN NO.	REFERENCE	DRAIN NO.	REFERENCE	DRAIN NO.		DRAIN NO.	REFERENCE	DRAIN NO.	REFERENCE	DRAIN NO.	REFERENCE
A1	HOT REHEAT LINE DRAIN POT 2-MS-08 M2-0202-01A, LOC: A-4	A22	HP TURBINE S AND CV DRAIN T2 M2-0202-01, LOC: G-3	B1	SPARE CONNECTION	B22	COLD REHEAT DRAIN M2-0202-01A, LOC: B-6	C1	TURBINE GLAND STEAM LINE DRAIN POT 2-GS-04 M2-0223, LOC: B-5	D1	TURBINE GLAND STEAM LINE DRAIN POT 2-GS-03 M2-0223, LOC: B-4	E1	SPARE CONNECTION
A2	HOT REHEAT LINE DRAIN POT 2-MS-07 M2-0202-01A, LOC: A-5	A23	HP TURBINE S AND CV DRAIN T2 M2-0202-01, LOC: A-4	B2	14" LP STM SUPPLY LINE TO STM GEN FEED PUMP TURB M2-0202-01B, LOC: F-6	B23	COLD REHEAT DRAIN M2-0202-01A, LOC: B-3	C2	AUX STEAM LINE DRAIN POT 2-SA-02 M1-0213, LOC: A-3	D2	TURBINE GLAND STEAM SYSTEM, T12 M2-0223, LOC: G-2	E2	EXTRACTION STEAM LINE DRAIN POT 2-EX-03 M2-0205, LOC: F-2
A3	HOT REHEAT LINE DRAIN POT 2-MS-06 M2-0202-01A, LOC: A-1	A24	HP TURBINE S AND CV DRAIN T2 M2-0202-01, LOC: G-4	B3	14" LP STM SUPPLY LINE TO STM GEN FEED PUMP TURB M2-0202-01B, LOC: B-6	B24	COLD REHEAT DRAIN M2-0202-01A, LOC: A-3	C3	AUX STEAM LINE DRAIN POT 2-SA-03 M1-0213, LOC: G-1	D3	TURBINE GLAND STEAM LINE DRAIN POT 2-GS-02 M2-0223, LOC: A-4	E3	EXTRACTION STEAM LINE DRAIN POT 2-EX-01 M2-0205, LOC: D-2
A4	HOT REHEAT LINE DRAIN POT 2-MS-05 M2-0202-01A, LOC: A-2	A25	HP TURBINE S AND CV DRAIN T2 M2-0202-01, LOC: A-3	B4	14" LP STM SUPPLY LINE TO STM GEN FEED PUMP TURB M2-0202-01B, LOC: D-6	B25	COLD REHEAT DRAIN M2-0202-01A, LOC: A-5	C4	AUX STEAM LINE DRAIN POT 2-EX-12 M2-0205, LOC: G-5	D4	TURBINE GLAND STEAM LINE DRAIN POT 2-GS-01 M2-0223, LOC: C-5	E4	EXTRACTION STEAM LINE DRAIN POT 2-EX-04 M2-0205, LOC: F-2
A5	HOT REHEAT DRAIN, T16 M2-0202-01A, LOC: A-4	A26	HP TURBINE S AND CV DRAIN T3 M2-0202-01, LOC: G-3	B5	14" LP STM SUPPLY LINE TO STM GEN FEED PUMP TURB M2-0202-01B, LOC: G-6	B26	COLD REHEAT DRAIN M2-0202-01A, LOC: D-6	C5	EXTRACTION STEAM LINE DRAIN POT 2-EX-10 M2-0205, LOC: D-5	D5	TURBINE GLAND STEAM LINE DRAIN POT 2-GS-05 M2-0223-A, LOC: A-4	E5	EXTRACTION STEAM LINE DRAIN POT 2-EX-02 M2-0205, LOC: D-1
A6	HOT REHEAT DRAIN, T16 M2-0202-01A, LOC: A-1	A27	32" MAIN STEAM LINE DRAIN POT 2-MS-23 M2-0202, LOC: C-2	B6	14" LP STM SUPPLY LINE TO STM GEN FEED PUMP TURB M2-0202-01B, LOC: E-6	B27	COLD REHEAT DRAIN M2-0202-01A, LOC: D-3	C6	EXTRACTION STEAM LINE DRAIN POT 2-EX-17 M2-0205, LOC: G-4	D6	LEAKOFF VALVE FROM SG FEED TURB SEAL STM HDR M2-0223-A, LOC: A-3		
A7	SPARE CONNECTION	A28	32" MAIN STEAM LINE DRAIN POT 2-MS-24 M2-0202, LOC: C-3	B7	SPARE CONNECTION	B28	COLD REHEAT DRAIN M2-0202-01A, LOC: D-3	C7	EXTRACTION STEAM LINE DRAIN POT 2-EX-09 M2-0205, LOC: D-5	D7	EXTRACTION STEAM LINE DRAIN POT 2-EX-16 M2-0205-A, LOC: G-6		
A8	34" MAIN STEAM LINE DRAIN POT 2-MS-04 M2-0202-01, LOC: A-5	A29	32" MAIN STEAM LINE DRAIN POT 2-MS-25 M2-0202, LOC: C-4	B8	COLD REHEAT DRAIN T6 M2-0202-01A, LOC: E-3	B29	COLD REHEAT DRAIN M2-0202-01A, LOC: D-5	C8	EXTRACTION STEAM LINE DRAIN POT 2-EX-11 M2-0205, LOC: G-5	D8	EXTRACTION STEAM LINE DRAIN POT 2-EX-14 M2-0205-A, LOC: G-5		
A9	34" MAIN STEAM LINE DRAIN POT 2-MS-01 M2-0202-01, LOC: G-2	A30	32" MAIN STEAM LINE DRAIN POT 2-MS-26 M2-0202, LOC: C-5	B9	COLD REHEAT DRAIN T6 M2-0202-01A, LOC: C-3			C9	SPARE CONNECTION	D9	EXTRACTION STEAM LINE DRAIN POT 2-EX-15 M2-0205-A, LOC: G-6		
A10	34" MAIN STEAM LINE DRAIN POT 2-MS-02 M2-0202-01, LOC: A-2	A31	SPARE CONNECTION	B10	COLD REHEAT DRAIN T7 M2-0202-01A, LOC: C-6			C10	SPARE CONNECTION	D10	EXTRACTION STEAM LINE DRAIN POT 2-EX-13 M2-0205-A, LOC: G-5		
A11	34" MAIN STEAM LINE DRAIN POT 2-MS-03 M2-0202-01, LOC: G-5			B11	COLD REHEAT DRAIN T7 M2-0202-01A, LOC: E-6			C11	SPARE CONNECTION	D11	AUX STEAM LINE DRAIN POT 2-SA-01 M1-0213, LOC: G-1		
A12	3" AUX. STEAM LINE DRAIN POT 2-MS-28 M2-0202-01B, LOC: A-5			B12	COLD REHEAT DRAIN T6 M2-0202-01A, LOC: E-3					D12	SPARE CONNECTION		
A13	26" STEAM DUMP HEADER DRAIN POT 2-MS-22 M2-0202-01B, LOC: B-3			B13	COLD REHEAT DRAIN T7 M2-0202-01A, LOC: C-3					D13	SPARE CONNECTION		
A14	26" STEAM DUMP HEADER DRAIN POT 2-MS-13 M2-0202-01B, LOC: F-2			B14	COLD REHEAT DRAIN T7 M2-0202-01A, LOC: C-6					D14	SPARE CONNECTION		
A15	6" SG FW PUMP TURB STM SUPPLY DRAIN POT 2-MS-20 M2-0202-01B, LOC: C-5			B15	COLD REHEAT DRAIN T6 M2-0202-01A, LOC: E-6								
A16	6" SG FW PUMP TURB STM SUPPLY DRAIN POT 2-MS-19 M2-0202-01B, LOC: E-4			B16	SPARE CONNECTION								
A17	34" MAIN STEAM LINE STRAINER DR POT 2-MS-12 M2-0202-01, LOC: G-2			B17	EXTRACTION STEAM LINE DRAIN POT 2-EX-08 M2-0205, LOC: G-4								
A18	34" MAIN STEAM LINE STRAINER DR POT 2-MS-11 M2-0202-01, LOC: A-2			B18	EXTRACTION STEAM LINE DRAIN POT 2-EX-06 M2-0205, LOC: D-3								
A19	34" MAIN STEAM LINE STRAINER DR POT 2-MS-10 M2-0202-01, LOC: A-6			B19	EXTRACTION STEAM LINE DRAIN POT 2-EX-07 M2-0205, LOC: G-4								
A20	34" MAIN STEAM LINE STRAINER DR POT 2-MS-09 M2-0202-01, LOC: G-6			B20	EXTRACTION STEAM LINE DRAIN POT 2-EX-05 M2-0205, LOC: D-3								
A21	SPARE CONNECTION			B21	SPARE CONNECTION								

MAIN CONDENSER 2-A DRAIN REFERENCES

REV	DWN	CHKD	APVD	REMARKS
CP-9	JRMC 11-17 2009	SM 11-17 2009		THIS DRAWING REVISED TO INCORPORATE DESIGN CHANGE FDA 2004-003813-01-00 PER SK-0002-04-003813-01-00.

NOTES:

1. FOR MECHANICAL SYMBOLS AND NOTES SEE DRAWING M1-0200.
2. FOR TYPICAL DRAIN SYMBOLS SEE DRAWING M2-0238, NOTE 3.
3. CIRCLED NUMBERS REPRESENT CONDENSER PENETRATION NUMBERS.
4. PIPING DESIGNATED VD IS PROCURED BY SPECIFICATION MS-44A.
5. T NUMBERS, SUCH AS TI6, DESIGNATE ALLIS CHALMERS CONNECTION NUMBERS.
6. CAPS ON SPARE DRAIN CONNECTIONS SHALL BE THREADED.
7. ALL DRAIN HEADERS SHALL BE SLOPED TOWARDS THE CONDENSER.
9. DRAIN VALVES SHALL BE LOCATED AS CLOSE AS POSSIBLE TO DRAIN HEADERS.
10. EXCEPT FOR SPARE CONNECTIONS, ALL DRAIN VALVES SHALL BE LOCKED OPEN.

FSAR FIGURE 9.3-9

THIS DRAWING CREATED ELECTRONICALLY

NON–SAFETY

LUMINANT
CPNPP
GLEN ROSE, TEXAS

FLOW DIAGRAM
VENTS AND DRAINS SYSTEM
TURBINE BUILDING

DWG. NO.	SH. NO.	REV.
M2-0237	01	CP-9

$$$$$$DATE$$$$$$

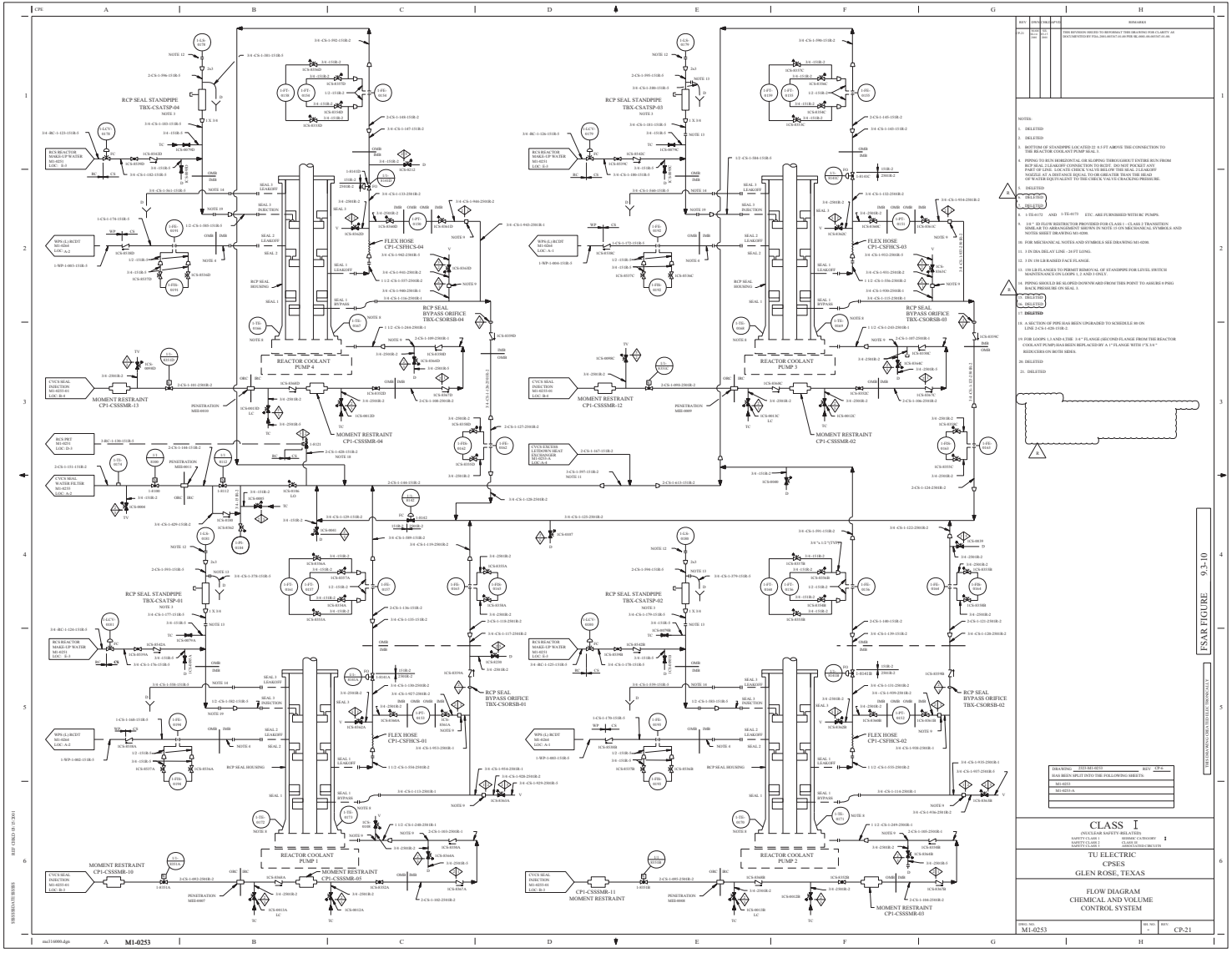

REV.	DESCRIPTION	BY	CHK	APP	DATE
A-0	NEW	WG	MA	MA	10/2/2001

REMARKS

THIS REVISION ISSUED TO REVERSE THE DRAWING FOR CLARITY AS DOCUMENTED BY FSAR-2001-003767-10 AND PER SCAQ-M-03-003767-01-00.

NOTES:

1. DELETED
2. DELETED
3. BOTTOM OF STANDPIPE LOCATED 32 ± 3 FT ABOVE THE CONNECTION TO THE REACTOR COOLANT PUMP SEAL 3.
4. PIPING TO RUN HORIZONTAL OR SLOPING THROUGHOUT ENTIRE RUN FROM RCP SEAL 2 LEAKOFF CONNECTION TO RCDT. DO NOT POCKET ANY PART OF LINE. LOCATE CHECK VALVE BELOW THE SEAL 2 LEAKOFF NOZZLE AT A DISTANCE EQUAL TO OR GREATER THAN THE HEAD OF WATER EQUIVALENT TO THE CHECK VALVE CRACKING PRESSURE.
5. DELETED
6. DELETED
7. DELETED
8. 1-TIS-0172 AND 3-TIS-0173 ETC. ARE FURNISHED WITH RC PUMPS.
9. 3/8 " ID FLOW RESTRICTOR PROVIDED FOR CLASS 1 - CLASS 2 TRANSITION SIMILAR TO ARRANGEMENT SHOWN IN NOTE 13 ON MECHANICAL SYMBOLS AND NOTES SHEET DRAWING M1-0200.
10. FOR MECHANICAL NOTES AND SYMBOLS SEE DRAWING M1-0200.
11. 3 IN DIA DELAY LINE - 24 FT LONG.
12. 3 IN 150 LB RAISED FACE FLANGE.
13. 150 LB FLANGES TO PERMIT REMOVAL OF STANDPIPE FOR LEVEL SWITCH MAINTENANCE ON LOOPS 1, 2 AND 3 ONLY.
14. PIPING SHOULD BE SLOPED DOWNWARD FROM THIS POINT TO ASSURE 0 PSIG BACK PRESSURE ON SEAL 3.
15. DELETED
16. DELETED
17. DELETED
18. A SECTION OF PIPE HAS BEEN UPGRADED TO SCHEDULE 80 ON LINE 2-CS-1-428-151B-2.
19. FOR LOOPS 1,3 AND 4, THE 3/4 " FLANGE (SECOND FLANGE FROM THE REACTOR COOLANT PUMP) HAS BEEN REPLACED BY A 1" FLANGE WITH 1"X 3/4 " REDUCERS ON BOTH SIDES.
20. DELETED
21. DELETED

DRAWING 2553-M1-0253 REV CP-9
HAS BEEN SPLIT INTO THE FOLLOWING SHEETS:
M1-0253
M1-0253-A

THIS DRAWING CONTAINS CLASS 1 PIPING

CLASS I
(NUCLEAR SAFETY-RELATED)
SAFETY CLASS 1 PRESSURE BOUNDARY 1
SAFETY CLASS 1 15,000 SF
SAFETY CLASS 1 ASSOCIATED CIRCUITS

TU ELECTRIC
CPSES
GLEN ROSE, TEXAS

FLOW DIAGRAM
CHEMICAL AND VOLUME
CONTROL SYSTEM

ORIG. NO. M1-0253 | RS NO. - | REV. CP-21

FSAR FIGURE 9.3-10

REF. CKD. 07-15-2011

SHEET 1 OF 1

mu116000.dgn

M1-0253

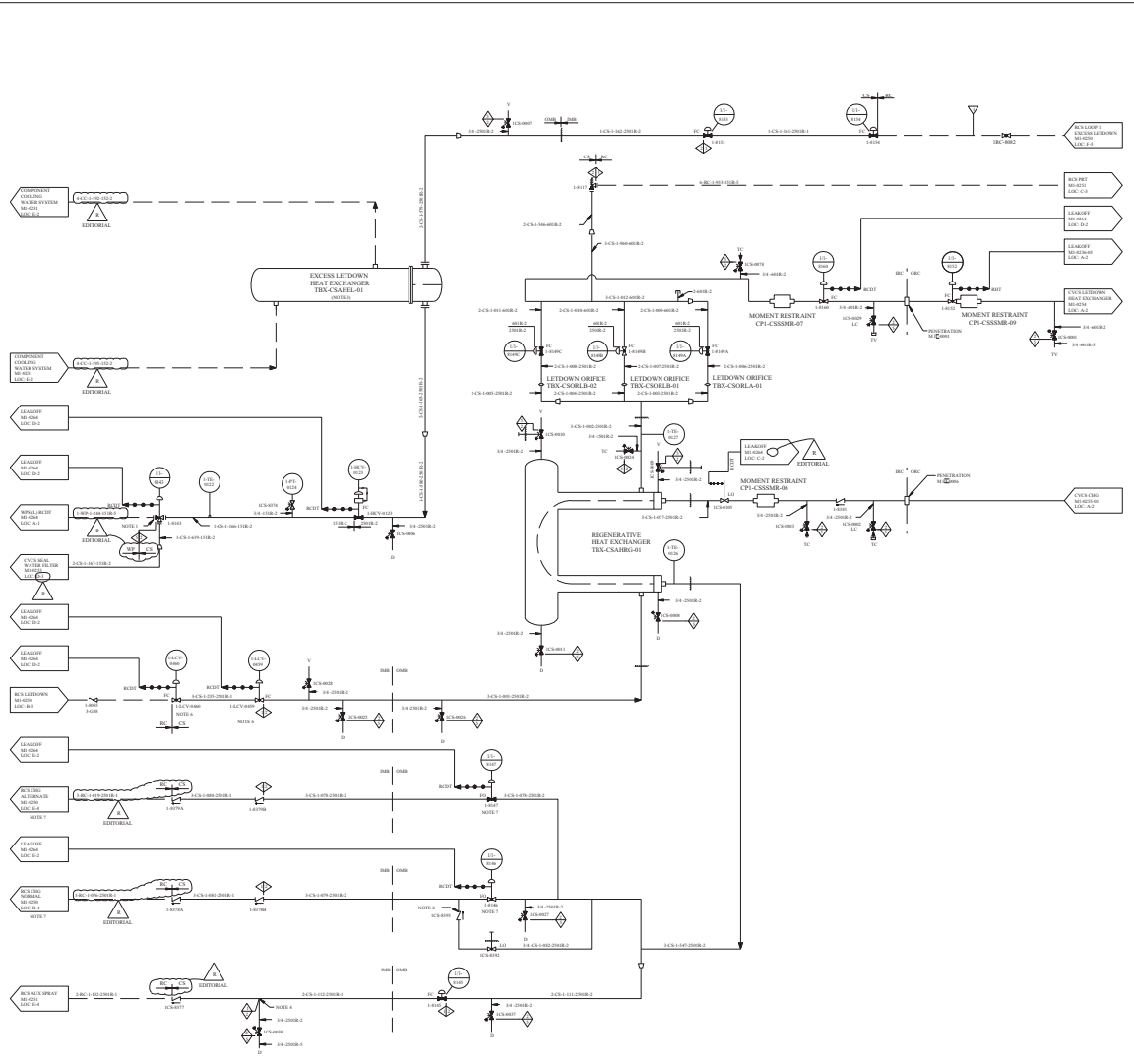

REV.	PWR CHG ART'D		REMARKS
	Yes	Yes	THIS DRAWING REVISED TO INCORPORATE DESIGN CHANGE
10	No	No	FSAR-2008-0019 (ECH 98 000 34) AND (ECH 02 00 54).
			EDITORIAL CHANGES AS NOTED

NOTES

1. THREE WAY VALVE ORIENTED IN PIPING AS SHOWN SO THAT VALVE FAILS WITH FLOW TO SEAL WATER FILTER.
2. SPRING LOADED CHECK VALVE.
3. ALL SHELL SIDE CONNECTIONS ARE SHOWN ON THE COMPONENT COOLING WATER FLOW DIAGRAM MI-0231.
4. 3/8 IN ID FLOW RESTRICTOR FOR CLASS 1-CLASS 2 TRANSITION SIMILAR TO ARRANGEMENT SHOWN IN NOTE 11 ON MECHANICAL SYMBOLS AND NOTES SHEET DRAWING MI-0200.
5. FOR MECHANICAL NOTES AND SYMBOLS SEE DRAWING MI-0200.
6. PRESSURIZER LOW LEVEL SIGNAL CLOSES VALVE.
7. USE OF THE NORMAL CHARGING LINE AND ALTERNATE CHARGING LINE SHOULD BE ALTERNATED OVER THE PLANT LIFE SUCH THAT NEITHER PATH WILL BE EXPOSED TO MORE THAN 50% OF THE DESIGN TRANSIENTS INVOLVING COMPLETE STOPPAGE OF LETDOWN AND/OR CHARGING FLOW. TRANSFER FROM ONE PATH TO THE OTHER SHOULD BE PERFORMED ONLY AT COLD SHUTDOWN CONDITIONS TO AVOID SUBJECTING THE CHARGING LINES TO UNNECESSARY THERMAL TRANSIENTS.

REFERENCES

THIS FLOW DIAGRAM HAS BEEN REDRAWN FROM WESTINGHOUSE DRAWING 11-5809-841 REV 6 WITH EXCEPTIONS AS FOLLOWS:

a. VALVES AND LINE NUMBERS HAVE BEEN ADDED.

b. CONTROL LOOPS HAVE BEEN DELETED (EXCEPT FOR THE PRESSURIZER LEVEL CONTROL LOOP) AND REPLACED WITH THE CONTROL LOOPS WILL BE SHOWN ON INSTRUMENTATION AND CONTROL DIAGRAM.

DRAWING 2123-MI-0253 REV. CP-6
HAS BEEN SPLIT INTO THE FOLLOWING SHEETS:
MI-0253
MI-0253-A

CLASS 1
(NUCLEAR SAFETY-RELATED)
SAFETY CLASS 1 SEISMIC CATEGORY I
SAFETY CLASS 2 QUALITY GROUP A
SAFETY CLASS 3 QUALITY GROUP CP-CPSES

TU ELECTRIC
CPSES
GLEN ROSE, TEXAS

FLOW DIAGRAM
CHEMICAL AND VOLUME CONTROL SYSTEM

DWG. NO.	SH. NO.	REV.
M1-0253	A	CP-10

FSAR FIGURE 9.3-10

PROPRIETARY INFORMATION

REF UNID 3-8-2001

RESTRICTED RIGHTS

REV	DWN	CHK	APVD	REMARKS
CP-7	Mkf 01-31 2006	DLK 01-31 2006		THIS DRAWING REVISED TO INCORPORATE DESIGN CHANGE FDA-2004-001193-04-00 PER SK-0011-04-001193-04-00.

NOTES:

1. THREE WAY VALVE ORIENTED IN PIPING AS SHOWN SO THAT VALVE FAILS WITH FLOW TO SEAL WATER FILTER.
2. ALL SHELL SIDE CONNECTIONS ARE SHOWN ON THE COMPONENT COOLING WATER FLOW DIAGRAM M2-0231-0.
3. FOR MECHANICAL NOTES AND SYMBOLS SEE DRAWING M1-0200-0.
4. DRAIN AND VENT LINES ROUTED TO FLOOR DRAIN IN FILTER COMPARTMENT.
5. UNLESS OTHERWISE NOTED, ALL DRAINS ON THIS DRAWING ARE DRAINED TO CHANNEL B.

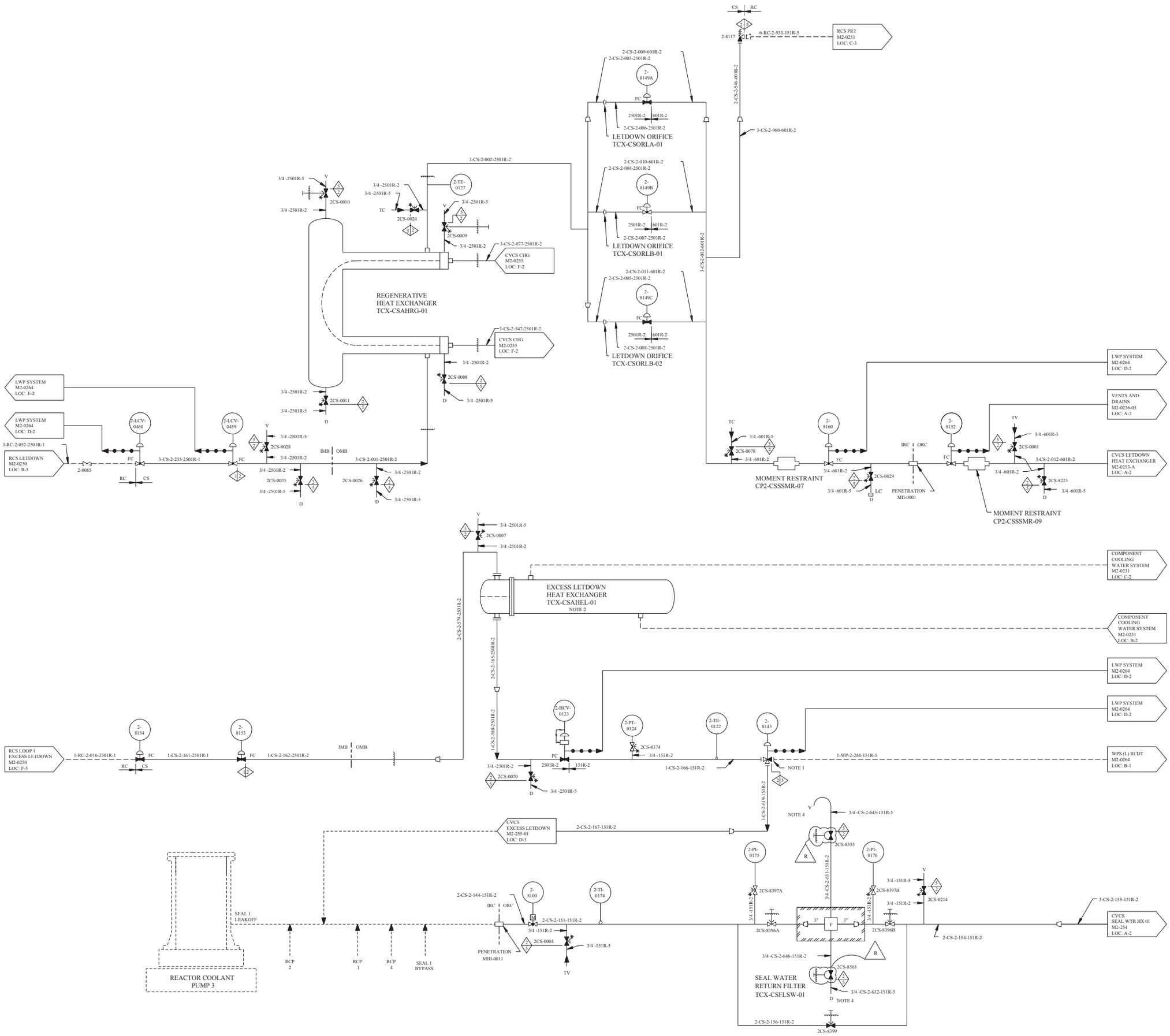

FSAR FIGURE 9.3-10

THIS DRAWING CREATED ELECTRONICALLY

CLASS I
(NUCLEAR SAFETY-RELATED)

SAFETY CLASS 1	SEISMIC CATEGORY I
SAFETY CLASS 2	CLASS 1E
SAFETY CLASS 3	ASSOCIATED CIRCUITS

LUMINANT
CPSES
GLEN ROSE, TEXAS

FLOW DIAGRAM
CHEMICAL AND VOLUME
CONTROL SYSTEM

DWG. NO.	SH. NO.	REV.
M2-0253	-	CP-7

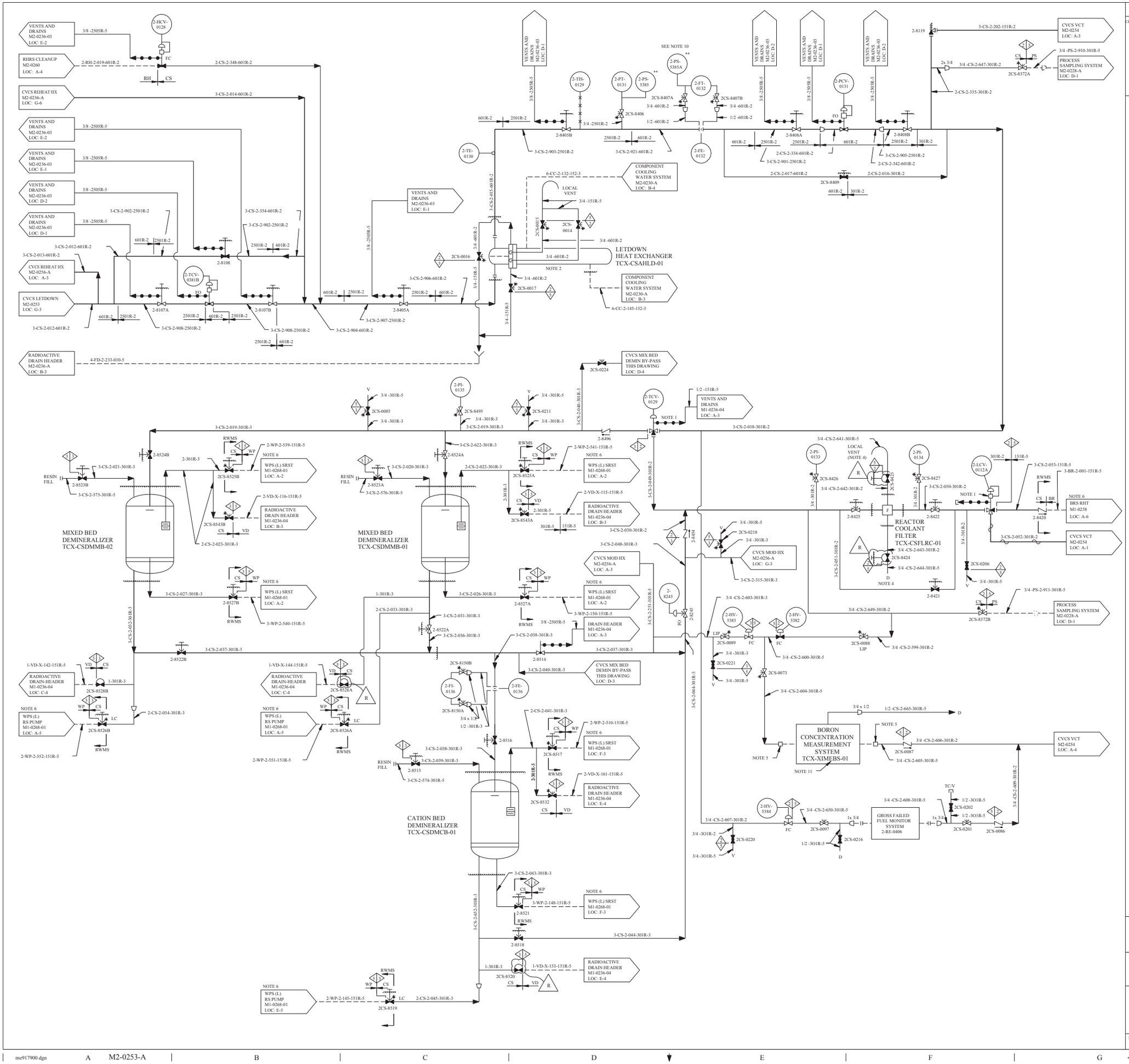

REV.	DWN	CHKD	APVD	REMARKS
CP-16	DLK 01-12-2009	MHF 01-12-2009		THIS DRAWING REVISED TO INCORPORATE DESIGN CHANGE FDA 2004-001193-04-00 PER SK-00124-04-001193-04-00.

NOTES:

1. THREE-WAY VALVE ORIENTED IN PIPING AS SHOWN SO THAT VALVE FAILS WITH FLOW TO THE VCT.
2. ALL SHELL SIDE CONNECTIONS ARE SHOWN ON THE COMPONENT COOLING WATER SYSTEM DRAWING M2-0230.
3. FOR MECHANICAL SYMBOLS AND NOTES SEE DRAWING M1-0200.
4. DRAIN AND VENT LINES ROUTED TO FLOOR DRAIN IN FILTER COMPARTMENT.
5. COMPRESSION FITTING.
6. DENOTES RADIOACTIVE WASTE MANAGEMENT SYSTEM CONTINUES ON IDENTIFIED DRAWING.
7. ** EQUIPMENT USED IN MITIGATION OF HELB.
8. DELETED
9. ALL DRAINS ON THIS DRAWING DRAIN TO DRAIN CHANNEL B UNLESS OTHERWISE NOTED.
10. PRESSURE SWITCH 2-PS-5385A ALSO PROVIDES LOCAL PRESSURE INDICATION.
11. THE BCMS IS ABANDONED IN PLACE.

FSAR FIGURE 9.3-10

THIS DRAWING CREATED ELECTRONICALLY

CLASS I
(NUCLEAR SAFETY-RELATED)
SAFETY CLASS 1 — SEISMIC CATEGORY I
SAFETY CLASS 2 — CLASS 1E
SAFETY CLASS 3 — ASSOCIATED CIRCUITS

LUMINANT
CPNPP
GLEN ROSE, TEXAS

FLOW DIAGRAM
CHEMICAL AND VOLUME
CONTROL SYSTEM

DWG. NO.	SH. NO.	REV.
M2-0253	A	CP-16

REF CKD 3/597 CP-8

$$$$$$$DATESSSSS

me917900.dgn A M2-0253-A B C D E F G < FINAL PRINT > H

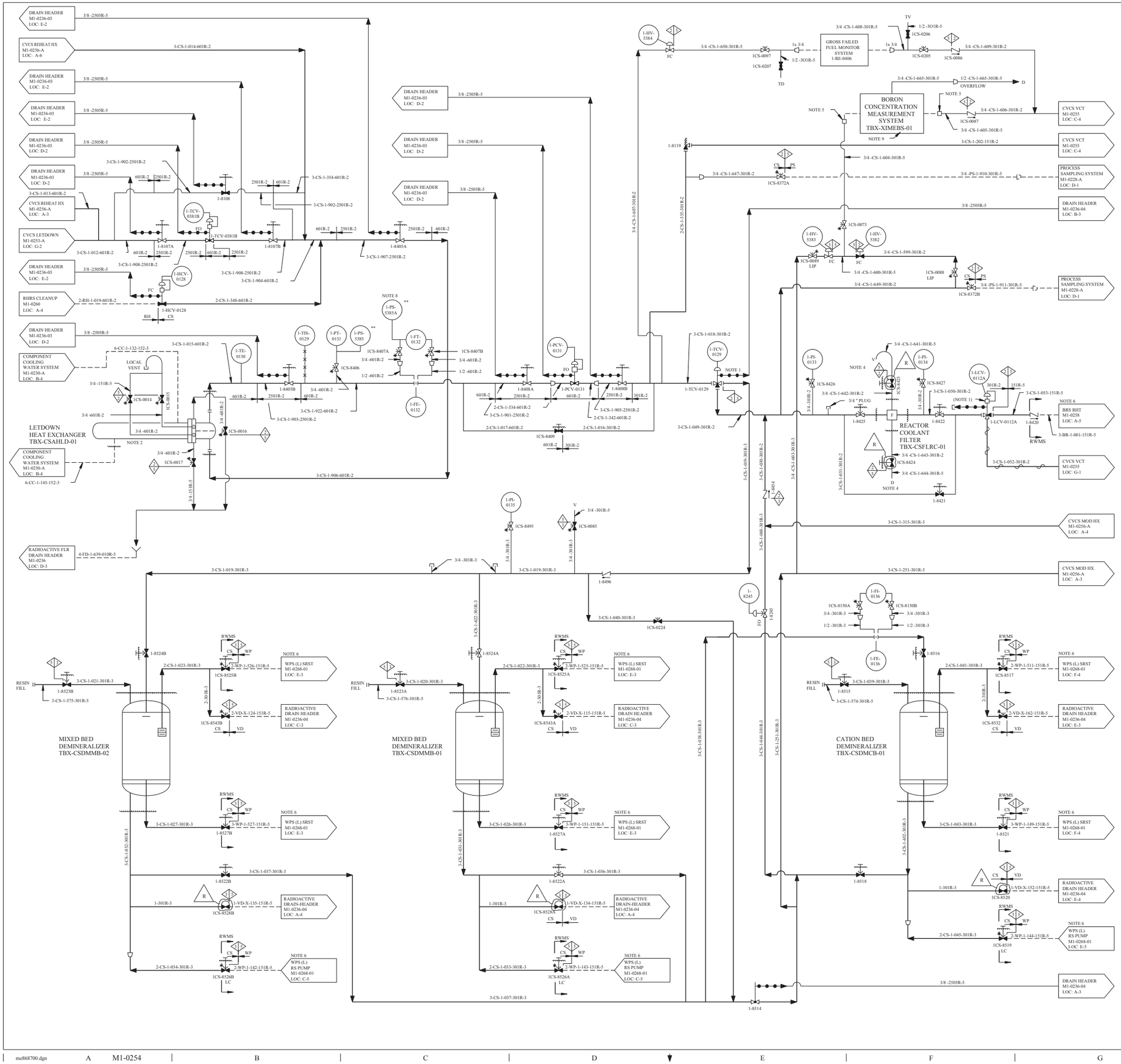

REV	DWN	CHKD	APVD	REMARKS
CP-25	DLC 09-14-2006	MM 09-14-2006		THIS DRAWING REVISED TO INCORPORATE DESIGN CHANGE FDA-2004-001193-03-00 PER SK-0019-04-001193-03-00.

NOTES:

1. THREE-WAY VALVE ORIENTED IN PIPING AS SHOWN SO THAT VALVE FAILS WITH FLOW TO THE VCT.
2. ALL SHELL SIDE CONNECTIONS ARE SHOWN ON THE COMPONENT COOLING WATER SYSTEM DRAWING M1-0230-A, LOC C-4.
3. FOR MECHANICAL SYMBOLS AND NOTES SEE DRAWING M1-0200.
4. DRAIN AND VENT LINES ROUTED TO FLOOR DRAIN IN FILTER COMPARTMENT.
5. COMPRESSION FITTING.
6. DENOTES RADIOACTIVE WASTE MANAGEMENT SYSTEM CONTINUES ON IDENTIFIED DRAWING.
7. ** EQUIPMENT USED IN MITIGATION OF HELB.
8. PRESSURE SWITCH 1-PS-5385A ALSO PROVIDES LOCAL PRESSURE INDICATION.
9. THE BCMS IS ABANDONED IN PLACE.

REFERENCE NOTES:

THIS FLOW DIAGRAM HAS BEEN REDRAWN FROM WESTINGHOUSE DRAWING 1138E94 (SH 2) REV 6, WITH EXCEPTIONS AS FOLLOWS:

a.) VALVE AND LINE NUMBERS HAVE BEEN ADDED.

b.) CONTROL LOOPS HAVE BEEN DELETED EXCEPT FOR THE PRIMARY AND THE FINAL ELEMENTS. THE DETAILS OF THE CONTROL LOOPS WILL BE SHOWN ON INSTRUMENTATION AND CONTROL DIAGRAM.

FSAR FIGURE 9.3-10

THIS DRAWING CREATED ELECTRONICALLY

CLASS I
(NUCLEAR SAFETY-RELATED)
SAFETY CLASS 1 — SEISMIC CATEGORY I
SAFETY CLASS 2 — CLASS 1E
SAFETY CLASS 3 — ASSOCIATED CIRCUITS

LUMINANT
CPSES
GLEN ROSE, TEXAS

FLOW DIAGRAM
CHEMICAL AND VOLUME
CONTROL SYSTEM

DWG. NO.	SH. NO.	REV.
M1-0254	-	CP-25

REF CKD 3/5/97 CP-19

me868700.dgn A M1-0254 FINAL PRINT

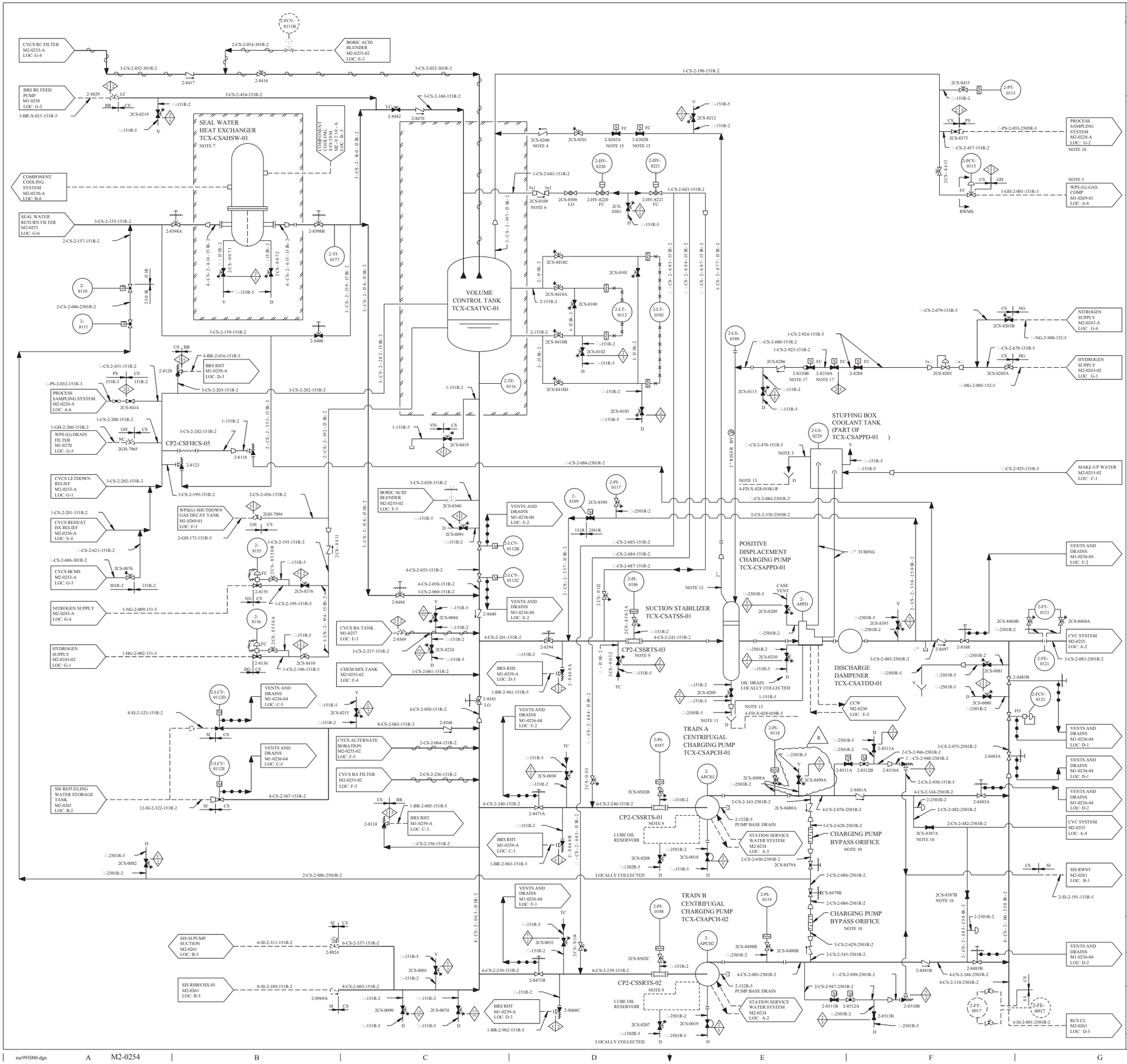
CVCS RC FILTER M2-0253-A LOC: G-4
BORIC ACID BLENDER M2-0255-02 LOC: E-3
BRS RE FEED PUMP M1-0258 LOC: G-2
3-BR-X-015-151R-5
SEAL WATER HEAT EXCHANGER TCX-CSAHSW-01
NOTE 7
COMPONENT COOLING SYSTEM M2-0230-A LOC: B-6
SEAL WATER RETURN FILTER M2-0253 LOC: G-6
VOLUME CONTROL TANK TCX-CSATVC-01
PROCESS SAMPLING SYSTEM M2-0228-A LOC: A-6
BRS RHT M1-0259-A LOC: D-3
WPS (G) DRAIN FILTER M1-0270 LOC: G-5
CP2-CSFHCS-05
CVCS LETDOWN RELIEF M2-0253-A LOC: G-1
CVCS REHEAT HX RELIEF M2-0256-A LOC: E-4
CVCS BCMS M2-0253-A LOC: G-5
WPS(G) SHUTDOWN GAS DECAY TANK M1-0269-01 LOC: F-3
NITROGEN SUPPLY M2-0243-A LOC: G-4
HYDROGEN SUPPLY M2-0243-02 LOC: G-1
SIS REFUELING WATER STORAGE TANK M2-0261 LOC: B-2
CHEM MIX TANK M2-0255-02 LOC: F-4
CVCS BA TANK M1-0257 LOC: E-3
CVCS ALTERNATE BORATION M2-0255-02 LOC: F-5
CVCS BA FILTER M2-0255-02 LOC: F-5
SIS SI PUMP SUCTION M2-0261 LOC: B-5
SIS RHRS HX-01 M2-0261 LOC: B-5
VENTS AND DRAINS M1-0236-04 LOC: E-2
VENTS AND DRAINS M1-0236-04 LOC: F-1
VENTS AND DRAINS M1-0236-04 LOC: F-2
VENTS AND DRAINS M1-0236-04 LOC: C-5
SUCTION STABILIZER TCX-CSATSS-01
CP2-CSSRTS-03
NOTE 9
CP2-CSSRTS-01
NOTE 9
CP2-CSSRTS-02
NOTE 9
POSITIVE DISPLACEMENT CHARGING PUMP TCX-CSAPPD-01
TRAIN A CENTRIFUGAL CHARGING PUMP TCX-CSAPCH-01
TRAIN B CENTRIFUGAL CHARGING PUMP TCX-CSAPCH-02
STUFFING BOX COOLANT TANK (PART OF TCX-CSAPPD-01)
DISCHARGE DAMPENER TCX-CSATDD-01
CHARGING PUMP BYPASS ORIFICE
NOTE 10
STATION SERVICE WATER SYSTEM M2-0234 LOC: A-5
STATION SERVICE WATER SYSTEM M2-0234 LOC: A-2
CCW M2-0230 LOC: E-5
PROCESS SAMPLING SYSTEM M2-0228-A LOC: G-2
NOTE 18
WPS (G) GAS COMP M1-0269-01 LOC: A-6
NOTE 5
NITROGEN SUPPLY M2-0243-A LOC: G-4
HYDROGEN SUPPLY M2-0243-02 LOC: G-1
MAKE-UP WATER M2-0255-02 LOC: C-1
CVC SYSTEM M2-0255 LOC: A-2
CVC SYSTEM M2-0255 LOC: A-4
SIS RWST M2-0261 LOC: B-1
RCS CL M2-0261 LOC: D-5
VENTS AND DRAINS M1-0236-04 LOC: F-2
VENTS AND DRAINS M1-0236-04 LOC: D-1
VENTS AND DRAINS M1-0236-04 LOC: D-2
VENTS AND DRAINS M1-0236-04 LOC: D-2
VENTS AND DRAINS M1-0236-04 LOC: D-2
OIL DRAIN LOCALLY COLLECTED
LOCALLY COLLECTED
LUBE OIL RESERVOIR
RMWS
2" RISER BY
2-PT-0115
2-PCV-0115
2-LT-0112
2-LT-0185
2-LS-0189
2-LS-0229
2-PI-0117
2-PI-0186
2-PI-0187
2-PI-0188
2-PI-0118
2-PI-0119
2-TI-0177
2-TE-0116
2-FT-0121
2-FE-0121
2-FT-0917
2-FE-0917
2-HV-8220
2-HV-8221
2-APPD
2-APCH1
2-APCH2
2-FCV-0111B
2-LCV-0112B
2-LCV-0112C
2-LCV-0112D
2-LCV-0112E
NOTE 13
4-FD-X-028-010G-R
NOTE 12
NOTE 11
NOTE 16
2CS-8387A
2CS-8387B
NOTE 15
2CS-8200
NOTE 4
2CS-8201
2CS-8202A
2CS-8202B
2CS-8212
2CS-8415
2CS-8373
2CS-8413
2CS-8205
2CS-8206
2CS-8203A
2CS-8203B
2CS-8204
2CS-8210B
2CS-8210A
2CS-8395
2CS-8404A
2CS-8404B
2CS-8388
2CS-8497
2CS-8481A
2CS-8481B
2CS-8485A
2CS-8485B
2CS-8483A
2CS-8483B
2CS-8480A
2CS-8480B
2CS-8479A
2CS-8479B
2CS-8513A
2CS-8513B
2CS-8511A
2CS-8511B
2CS-8512A
2CS-8512B
2CS-8510A
2CS-8510B
2CS-8498A
2CS-8498B
2CS-8499A
2CS-8502B
2CS-8502C
2CS-8390
2CS-8418A
2CS-8418B
2CS-8418C
2CS-8418D
2CS-8419
2CS-8560
2CS-8091
2CS-8084
2CS-8209
2CS-8210
2CS-8080
2CS-8081
2CS-0109
NOTE 6
2CS-0300
LO
2CS-0301
2CS-0100
2CS-0101
2CS-0102
2CS-0103
2CS-0030
2CS-0031
2CS-8001
2CS-0090
2CS-0074
2CS-0207
2CS-0019
2CS-0208
2CS-0018
2CS-0082
2CS-0084
2CS-0209
2CS-0219
2CS-0076
2CS-8376
2CS-8410
2CS-8411
2CS-8558A
2CS-8558B
2CS-0071
2CS-0072
2CS-0215
2CS-8224
2CS-0012
2CS-0032
2CS-0033
2CS-0134
2CS-8502A
2CS-8395
2CS-8373
2CS-8413
2CS-8205
2CS-8203A
2CS-8203B
2CS-8204
2CS-8387A
2CS-8387B
2CS-8483A
2CS-8483B
2CS-8481A
2CS-8481B
2CS-8485A
2CS-8485B
2CS-8480A
2CS-8480B
2CS-8479A
2CS-8479B
2CS-8513A
2CS-8513B
2CS-8511A
2CS-8511B
2CS-8512A
2CS-8512B
2CS-8510A
2CS-8510B
2CS-8498A
2CS-8498B
2CS-8499A
2CS-8502B
2CS-8502C
2CS-8390
2CS-8418A
2CS-8418B
2CS-8418C
2CS-8418D
2CS-8419
2CS-8560
2CS-8091
2CS-8084
2CS-8209
2CS-8210
2CS-8080
2CS-8081
2CS-0109
NOTE 6
2CS-0300
LO
2CS-0301
2CS-0100
2CS-0101
2CS-0102
2CS-0103
2CS-0030
2CS-0031
2CS-8001
2CS-0090
2CS-0074
2CS-0207
2CS-0019
2CS-0208
2CS-0018
2CS-0082
2CS-0084
2CS-0209
2CS-0219
2CS-0076
2CS-8376
2CS-8410
2CS-8411
2CS-8558A
2CS-8558B
2CS-0071
2CS-0072
2CS-0215
2CS-8224
2CS-0012
2CS-0032
2CS-0033
2CS-0134
2CS-8502A
2-8629
2-8482
2-8470
2-8417
2-8416
2-8398A
2-8398B
2-8400
2-8110
2-8111
2-8120
2-8124
2-8123
2-8118
2-8155
2-8156
2-8484
2-8509
2-8394
2-8440
2-8546
2-8341
2-8471A
2-8471B
2-8468A
2-8468B
2-8468C
2-8924
2-8969A
2-8109
2-8497
2-8388
2-8483B
2-8485A
2-8485B
2-8481A
2-8481B
2-8387A
2-8387B
2-8511A
2-8511B
2-8512A
2-8512B
2-8510A
2-8510B
2-8513A
2-8513B
2-8498A
2-8498B
2-8499A
2-8502B
2-8502C
2-8390
2-8418A
2-8418B
2-8418C
2-8418D
2-8419
2-8560
2-8091
2-8084
2-8209
2-8210
2-8080
2-8081
2-8109
2-8497
2-8388
2-8483B
2-8485A
2-8485B
2-8481A
2-8481B
2-8387A
2-8387B
2-8511A
2-8511B
2-8512A
2-8512B
2-8510A
2-8510B
2-8513A
2-8513B
2-8498A
2-8498B
2-8499A
2-8502B
2-8502C
2-8390
2-8418A
2-8418B
2-8418C
2-8418D
2-8419
2-8560
2-8091
2-8084
2-8209
2-8210
2-8080
2-8081
1-CS-2-198-151R-2
3-CS-2-052-301R-2
3-CS-2-454-151R-2
3-CS-2-160-151R-2
3-CS-2-159-151R-2
3-CS-2-155-151R-2
2-CS-2-157-151R-2
3-CS-2-203-151R-2
3-CS-2-202-151R-2
3-CS-2-242-151R-2
3-CS-2-199-151R-2
1-CS-2-200-151R-2
1-CS-2-201-151R-2
2-CS-2-621-151R-2
2-CS-2-606-301R-2
2-CS-2-456-151R-2
1-CS-2-193-151R-2
1-CS-2-195-151R-5
1-CS-2-196-151R-5
2-GH-173-151R-5
1-NG-2-009-151-5
1-HG-2-002-151-5
8-SI-2-323-151R-2
12-SI-2-322-151R-2
8-CS-2-567-151R-2
2-CS-2-086-2501R-2
3-CS-2-620-151R-2
4-CS-2-055-151R-2
4-CS-2-058-151R-2
3-CS-2-060-151R-2
2-CS-2-064-151R-2
2-CS-2-236-151R-2
1-BR-2-005-151R-5
2-CS-2-356-151R-2
4-BR-2-016-151R-5
1-CS-2-683-151R-2
1-CS-2-923-151R-2
1-CS-2-924-151R-2
1-CS-2-680-151R-2
1-CS-2-946-151R-2
1-CS-2-948-151R-2
2-CS-2-950-151R-5
2-CS-2-482-2501R-2
2-CS-2-344-2501R-2
2-CS-2-343-2501R-2
2-CS-2-240-151R-2
2-CS-2-470-151R-5
2-CS-2-925-151R-5
2-CS-2-084-2501R-2
2-CS-2-338-2501R-2
2-CS-2-685-151R-2
2-CS-2-684-151R-2
2-CS-2-687-151R-2
2-CS-2-337-0R-2
2-CS-2-197-1S-2
2-CS-2-8-0-1S-2
2-CS-2-159-1S-2
2-CS-2-158-1S-2
2-CS-2-202-1S-2
2-CS-2-353-1S-2
2-CS-2-192-1S-2
2-CS-2-8-1S-2
2-CS-2-063-1S-2
2-CS-2-684-1S-2
2-CS-2-685-1S-2
2-CS-2-687-1S-2
2-CS-2-677-1S-2
2-CS-2-655-1S-2
2-CS-2-644-1S-2
2-CS-2-645-1S-2
2-CS-2-615-1S-2
4-CS-2-644-1S-2
1-CS-2-679-151R-5
1-CS-2-678-151R-5
1-HG-2-005-152-5
1-NG-2-900-152-5
1-GH-2-001-151R-3
1-CS-2-075-2501R-2
1-CS-2-628-2501R-2
1-CS-2-629-2501R-2
1-CS-2-630-2501R-2
1-CS-2-631-2501R-2
1-CS-2-632-2501R-2
1-CS-2-633-2501R-2
1-CS-2-634-2501R-2
1-CS-2-635-2501R-2
1-CS-2-636-2501R-2
1-CS-2-637-2501R-2
1-CS-2-638-2501R-2
1-CS-2-639-2501R-2
1-CS-2-640-2501R-2
1-CS-2-641-2501R-2
1-CS-2-642-2501R-2
1-CS-2-643-2501R-2
1-CS-2-644-2501R-2
1-CS-2-645-2501R-2
1-CS-2-646-2501R-2
1-CS-2-647-2501R-2
1-CS-2-648-2501R-2
1-CS-2-649-2501R-2
1-CS-2-650-2501R-2
1-CS-2-651-2501R-2
1-CS-2-652-2501R-2
1-CS-2-653-2501R-2
1-CS-2-654-2501R-2
1-CS-2-655-2501R-2
1-CS-2-656-2501R-2
1-CS-2-657-2501R-2
1-CS-2-658-2501R-2
1-CS-2-659-2501R-2
1-CS-2-660-2501R-2
1-CS-2-661-2501R-2
1-CS-2-662-2501R-2
1-CS-2-663-2501R-2
1-CS-2-664-2501R-2
1-CS-2-665-2501R-2
1-CS-2-666-2501R-2
1-CS-2-667-2501R-2

REV	DWN	CHK'D	APVD	REMARKS
CP-29	JEMC 07-29-2014			THIS DRAWING REVISED TO INCORPORATE EDITORIAL CHANGES PER AI-CR-2014-006921-2.

NOTES:

1. FOR MECHANICAL SYMBOLS AND NOTES SEE DRAWING M1-0200.
2. DRAIN AND VENT LINES ROUTED TO FLOOR DRAIN IN FILTER COMPARTMENT.
3. DELETED
4. CHECK VALVE MUST BE IN HORIZONTAL PIPE AT HIGH POINT OF PIPE FROM STABILIZER TO VCT VENT.
5. DENOTES RADIOACTIVE WASTE MANAGEMENT SYSTEM CONTINUES ON IDENTIFIED DRAWING.
6. CHECK VALVE 1CS-0109 INSTALLED IN 45□ V ANGLE SO FLAPPER REMAINS OPEN TO ALLOW GAS TO BACKFLOW UNDER LOW VELOCITY. HIGH FLOW CONDITIONS WILL CAUSE FLAPPER TO CLOSE.
7. FLOW DIAGRAM ORIGINALLY REDRAWN FROM WESTINGHOUSE DRAWING 1138E94 (SH 3) REV 6.
8. LINE 3-CS-1-242-151R-2 HAS A SCHEDULE 160 PIECE OF PIPE IN IT, SEE BRP-CS-1-SB-010.
9. ARGON INJECTION PATH REFERENCE M1-0228-A (G-4) AND NOTE 16.

FSAR FIGURE 9.3-10

THIS DRAWING CREATED ELECTRONICALLY

CLASS I
(NUCLEAR SAFETY-RELATED)

SAFETY CLASS 1	SEISMIC CATEGORY I
SAFETY CLASS 2	CLASS 1E
SAFETY CLASS 3	ASSOCIATED CIRCUITS

LUMINANT
CPNPP
GLEN ROSE, TEXAS

FLOW DIAGRAM
CHEMICAL & VOLUME CONTROL SYSTEM
VOLUME CONTROL TANK LOOP

DWG. NO.	SH. NO.	REV.
M1-0255	-	CP-29

REF CHKD 3/19/2001

$$$$$$$$DATE$$$$$$$

me872700.dgn A M1-0255 B C D E F G < FINAL PRINT > H

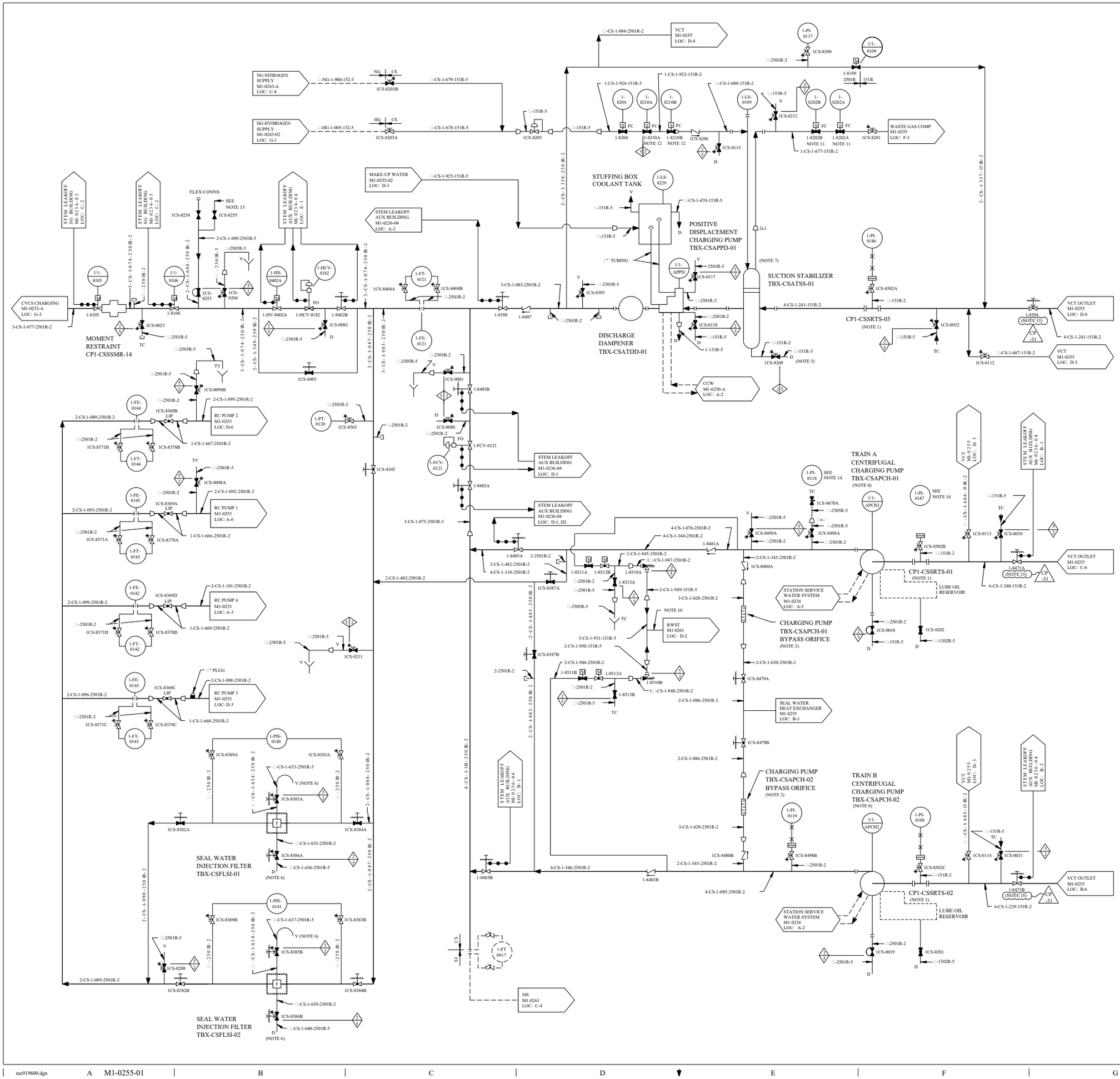

REV	DWN	CHKD	APVD	REMARKS
CP-31	DLK 10-23-2017	GAW 10-23-2017	MHF 04-12-2017	THIS DRAWING REVISED TO INCORPORATE ALCR-2017-000789-16 TO EDITORIALLY ADD A NOTE TO VALVES 1-8471A, 1-8471B AND 1-8394.

NOTES:

1. TEMPORARY STRAINERS CP1-CSSRTS-01,02,03 ARE PLACED IN THE SPOOL PIECE DURING INITIAL FLUSHING OPERATIONS. STRAINER MUST BE REMOVED AT PLANT START-UP, INSTALL PRESSURE GAUGE USING □" CAPPED CONNECTION. STRAINER AND PRESSURE GAUGE TO BE SUPPLIED BY OTHERS. THE TEMPORARY STRAINERS CAN BE RE-INSTALLED FOR POST MAINTENANCE ACTIVITIES.
2. MINIMUM OF 5 FEET OF STRAIGHT RUN AFTER MINIMUM FLOW ORIFICE SUPPLIED BY PUMP MANUFACTURER.
3. FOR MECHANICAL SYMBOLS AND NOTES SEE DRAWING M1-0200.
4. OVERFLOW FROM PUMP COOLANT HEAD TANK.
5. PLUNGER POT DRAIN.
6. DRAIN AND VENT LINES ROUTED TO FLOOR DRAIN IN FILTER COMPARTMENT.
7. PIPE FROM SUCTION STABILIZER MUST BE CONTINUOUSLY SLOPED UP TO CHECK VALVE.
8. NON-NUCLEAR SAFETY RELATED □" SS TUBING DRIP POCKET DRAINS, ROUTED TO EQUIPMENT DRAINS PROVIDED FOR TBX-CSAPCH-01,02 .
9. FLOW DIAGRAM ORIGINALLY REDRAWN FROM WESTINGHOUSE DRAWING 1138E94 (SH 3) REV 6.
10. PIPING FROM THE OUTLET OF THE RELIEF VALVES TO THE RWST SHALL BE SUPPORTED SUCH THAT THE PRESSURE BOUNDARY WILL REMAIN INTACT AND ALLOW FLOW PATH THROUGH THE LINE FOLLOWING A SAFE SHUTDOWN EARTHQUAKE.
11. VALVES MAINTAINED IN NORMALLY CLOSED POSITION, EXCEPT WHEN THE POSITIVE DISPLACEMENT PUMP IS IN OPERATION, WHEN THEY ARE OPENED.
12. VALVES MAINTAINED IN NORMALLY CLOSED POSITION, EXCEPT UPON INDICATION OF HI LEVEL IN SUCTION STABILIZER, WHEN THEY ARE MANUALLY OPERATED.
13. FLEX CONNECTION - MAY BE A PIPE CAP OR STORZ CONNECTION.
14. THESE INSTRUMENTS 1-PI-0118 AND 1-PI-0187 ARE ABANDONED IN PLACE PER FDA-2016-000141-01.
15. CAUTION, CLOSING THIS VALVE REMOVES CCP AND PDP SUCTION PIPING OVER PRESSURE PROTECTION.

FSAR FIGURE 9.3-10

THIS DRAWING CREATED ELECTRONICALLY

CLASS I
(NUCLEAR SAFETY-RELATED)
SAFETY CLASS 1 SEISMIC CATEGORY I
SAFETY CLASS 2 CLASS 1E
SAFETY CLASS 3 ASSOCIATED CIRCUITS

LUMINANT
CPNPP
GLEN ROSE, TEXAS

FLOW DIAGRAM
CHEMICAL AND VOLUME CONTROL
SYSTEM CHARGING AND POSITIVE
DISPLACEMENT PUMP TRAINS

DWG. NO.	SH. NO.	REV.
M1-0255	01	CP-31

FINAL PRINT

me919600.dgn A M1-0255-01

REF CKD CP-18 11/24/97

REV	DWN	CHK	APVD	REMARKS
CP-15	DLK 07-11 2016	GAW 07-11 2016	MHF 07-18 2016	THIS DRAWING REVISED TO INCORPORATE AI-CR-2016-006497-1 TO EDITORIALLY CORRECT THE LOCATION OF THE TAKEOFF POINT FOR SUPPLY VALVE 1CS-0067 TO BE BETWEEN 1CS-8455 AND ORIFICE FLANGE CP1-CSORDD-01.

NOTES:

1. FOR MECHANICAL SYMBOLS AND NOTES SEE DRAWING M1-0200.
2. FLOW DIAGRAM ORIGINALLY REDRAWN FROM WESTINGHOUSE DRAWING 1138E94 SH 3 REV 6.
3. UNLESS OTHERWISE NOTED ALL DRAINS COLLECTED BY LOCAL DRAIN SYSTEM TO DRAIN CHANNEL B.

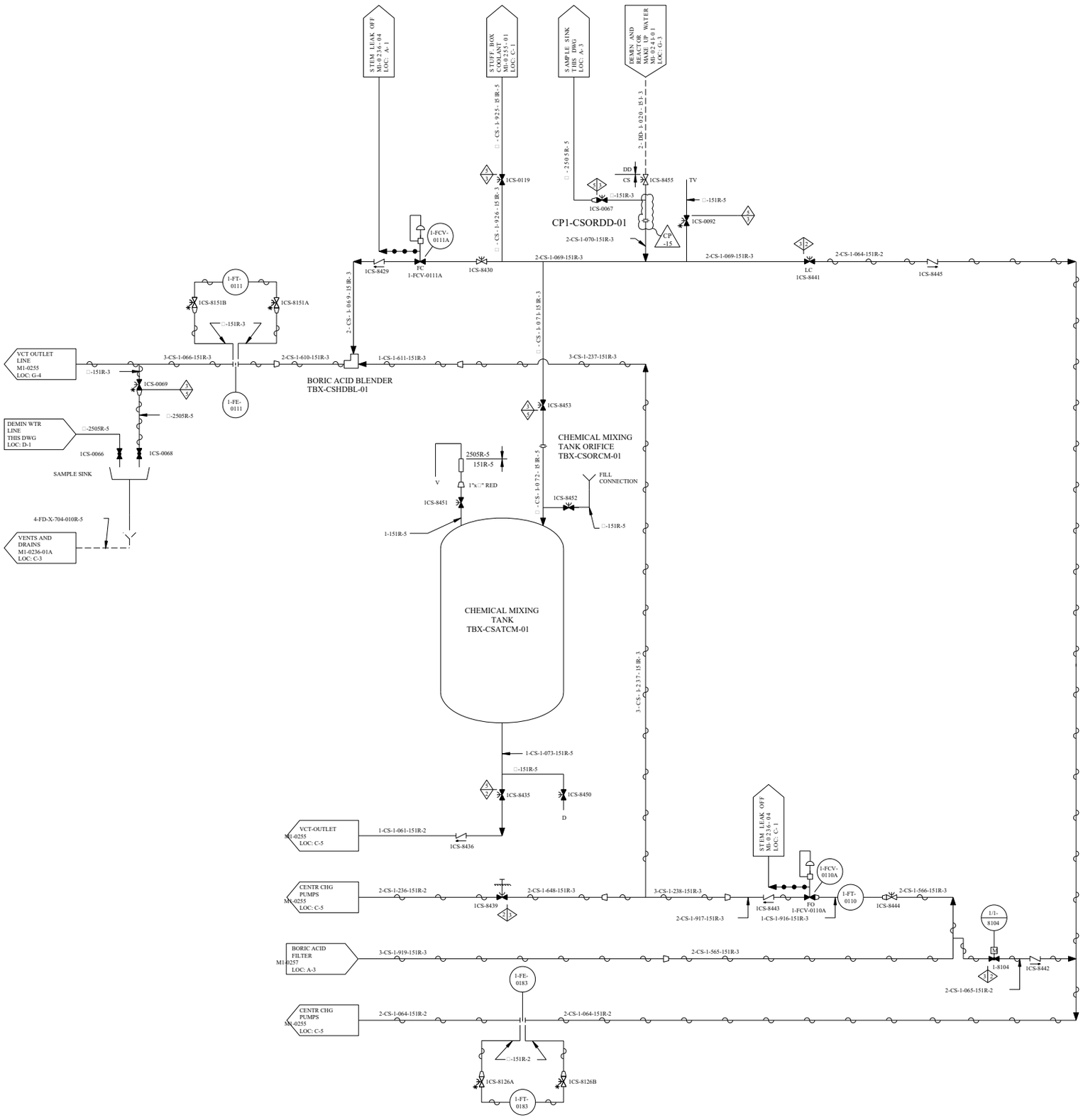

FSAR FIGURE 9.3-10

THIS DRAWING CREATED ELECTRONICALLY

CLASS I
(NUCLEAR SAFETY-RELATED)
SAFETY CLASS 1 — SEISMIC CATEGORY I
SAFETY CLASS 2 — CLASS 1E
SAFETY CLASS 3 — ASSOCIATED CIRCUITS

LUMINANT
CPNPP
GLEN ROSE, TEXAS

FLOW DIAGRAM
CHEMICAL & VOLUME
CONTROL SYSTEM

DWG. NO.	SH. NO.	REV.
M1-0255	02	CP-15

REF. CHECKED 07/2016

mc462300.dgn A M1-0255-02 FINAL PRINT

REV	DWN	CHKD	APVD	REMARKS
CP-14	DLK 10-19-2014	MM 10-21-2014		THIS DRAWING REVISED TO INCORPORATE DESIGN CHANGE FDA 2013-000008-06-00 PER SK-0001-13-000008-06-00.

NOTES:

1. LOCATED AS CLOSE TO CONTAINMENT AS POSSIBLE.
2. FOR MECHANICAL SYMBOLS AND NOTES SEE DRAWING M1-0200.
3. DRAIN AND VENT LINES ROUTED TO FLOOR DRAIN IN FILTER COMPARTMENT.
4. ALL VENTS AND DRAINS ON THIS DRAWING DRAIN TO DRAIN CHANNEL B, UNLESS OTHERWISE NOTED.
5. FLEX CONNECTION - MAY BE A PIPE CAP OR STORZ CONNECTION.

DISCHARGE DAMPENER M2-0254 LOC: G-4

3-CS-2-074-2501R-2

2-FT-0121

2-FE-0121

2CS-8404A

2CS-8404B

□-2501R-2

3-CS-2-083-2501R-2

VENTS AND DRAINS M2-0256-04 LOC: F-1

□" SS

2-HCV-0182

2-HIS-8402A

2-8402B

2-HCV-0182

FO

2CS-8403

2-CS-2-349-2501R-2

2-CS-2-087-250IR-2

□-2501R-5

2CS-0223

FLEX CONNS

SEE NOTE 5

2CS-0254

2CS-0255

2-CS-2-689-2501R-5

2CS-2-688-250IR-2

2CS-0253

2-8106

FLOOR DRAIN M2-0256-03 LOC: C-2

□ - 15 IR-5

2-8105

FLOOR DRAIN M2-0256-03 LOC: C-2

MOMENT RESTRAINT CP2-CSSSMR-14

3-CS-2-074-2501R-2

2CS-8222

2CS-0023

PENETRATION M-III-0006

ORC IRC

3-CS-2-077-2501R-2

2-8381

2CS-0002

LC

2CS-0003

TC

MOMENT RESTRAINT CP2-CSSSMR-06

LO

2CS-0105

RCDT

LIQUID WASTE PROCESSING M2-0264 LOC: D-3

REGENERATIVE HEAT EXCHANGER TCX-CSAHRG-01

2-TE-0126

3-CS-2-547-2501R-2

2-8147

OMB IMB

3-CS-2-078-2501R-2

LWP SYSTEM M2-0264 LOC: E-2

CS RC

3-CS-2-080-2501R-1

RCS CHG ALTERNATE M2-0250 LOC: E-4

2-8379B 2-8379A

3-RC-2-019-2501R-1

2-8146

3-CS-2-079-2501R-2

3-CS-2-081-2501R-1

RCS CHG NORMAL M2-0250 LOC: C-4

2-8378B 2-8378A

3-RC-2-076-2501R-1

2CS-0027

3-CS-2-082-2501R-2

2CS-8392

2CS-8393

2-8145

2-CS-2-111-2501R-2

2-CS-2-112-2501R-1

2-RC-2-132-2501R-1

RCS AUX SPRAY M2-0251 LOC: E-5

2CS-8377

NOTE 4

2CS-0037

2CS-0038

CHARGING PUMP M2-0254 LOC: G-5

2-CS-2-482-2501R-2

2CS-8345

2-CS-2-087-250IR-2

2CS-0213

2-PIS-0140

2CS-8383A

2CS-8389A

V (NOTE 3)

2CS-8385A

2CS-8384A

2CS-8382A

2-CS-2-088-250IR-2

2-CS-2-634-250IR-2

SEAL WATER INJECTION FILTER TCX-CSFLSI-01

2CS-8386A

(NOTE 3)

2-PIS-0141

2CS-8383B

2CS-8389B

2CS-8385B

2CS-8384B

2CS-8382B

2-CS-2-638-250IR-2

2-CS-2-089-2501R-2

2-CS-2-090-250IR-2

SEAL WATER INJECTION FILTER TCX-CSFLSI-02

2CS-8386B

2CS-0212

MOMENT RESTRAINT CP2-CSSSMR-11

2-FE-0144

LIP 2CS-8369B

2-FT-0144

2-CS-2-089-2501R-2

2CS-8371B

2CS-8370B

1-CS-2-667-2501R-2

2-CS-2-095-2501R-2

2-8351B

RC PUMP 2 M2-0255-01 LOC: D-6

PENETRATION M-III-0008

MOMENT RESTRAINT CP2-CSSSMR-10

2-FE-0145

LIP 2CS-8369A

2-FT-0145

2-CS-2-093-2501R-2

2CS-8371A

2CS-8370A

1-CS-2-666-2501R-2

2-CS-2-092-2501R-2

2-8351A

RC PUMP 1 M2-0255-01 LOC: A-6

PENETRATION M-III-0007

MOMENT RESTRAINT CP2-CSSSMR-13

2-FE-0142

LIP 2CS-8369D

2-FT-0142

2-CS-2-099-2501R-2

2CS-8371D

2CS-8370D

1-CS-2-669-2501R-2

2-CS-2-101-2501R-2

2-8351D

RC PUMP 4 M2-0255-01 LOC: A-3

PENETRATION M-III-0010

MOMENT RESTRAINT CP2-CSSSMR-12

2-FE-0143

LIP 2CS-8369C

2-FT-0143

2-CS-2-096-2501R-2

2CS-8371C

2CS-8370C

1-CS-2-668-2501R-2

2-CS-2-098-2501R-2

2-8351C

RC PUMP 3 M2-0255-01 LOC: D-3

PENETRATION M-III-0009

FSAR FIGURE 9.3-10

THIS DRAWING CREATED ELECTRONICALLY

CLASS I

(NUCLEAR SAFETY-RELATED)

SAFETY CLASS 1	SEISMIC CATEGORY I
SAFETY CLASS 2	CLASS 1E
SAFETY CLASS 3	ASSOCIATED CIRCUITS

LUMINANT
CPNPP
GLEN ROSE, TEXAS

FLOW DIAGRAM
CHEMICAL AND VOLUME CONTROL SYSTEM

DWG. NO.	SH. NO.	REV.
M2-0255	-	CP-14

$$$$$$$ DATE $$$$$

me919000.dgn A M2-0255 B C D E F G < FINAL PRINT > H

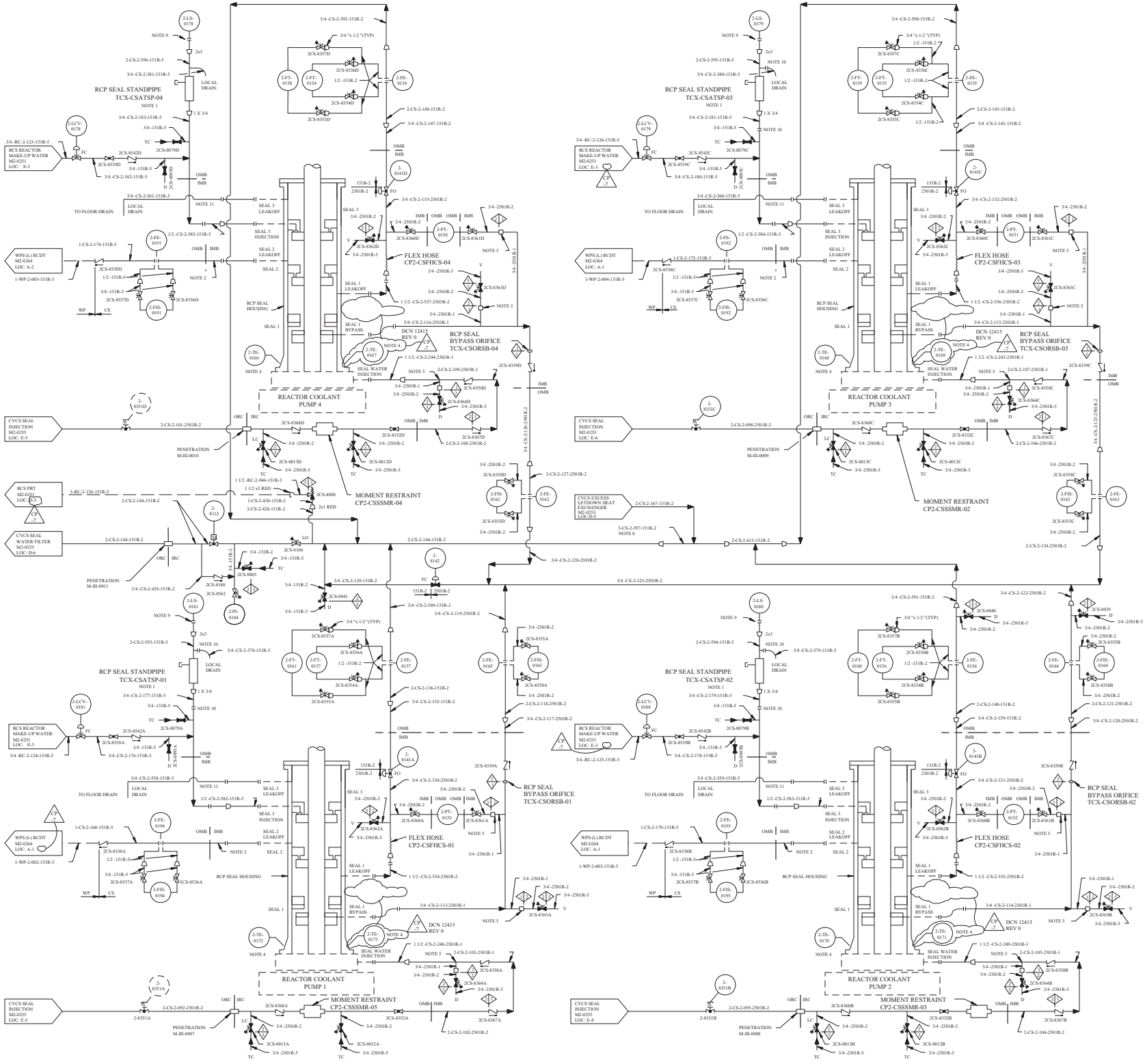

REV	DWN	CHKD	APVD	REMARKS
CP-7	SSS 09-02 1998			THIS DRAWING REVISED TO INCORPORATE DESIGN CHANGE DCN 12415 REV 0.

NOTES

1. BOTTOM OF STANDPIPE LOCATED 22 0.5 FT ABOVE THE CONNECTION TO THE REACTOR COOLANT PUMP SEAL 3.
2. PIPING TO RUN HORIZONTAL OR SLOPING THROUGHOUT ENTIRE RUN FROM RCP SEAL 2 LEAKOFF CONNECTION TO RCDT. DO NOT POCKET ANY PART OF LINE. LOCATE CHECK VALVE BELOW THE SEAL 2 LEAKOFF NOZZLE AT A DISTANCE EQUAL TO OR GREATER THAN THE HEAD OF WATER EQUIVALENT TO THE CHECK VALVE CRACKING PRESSURE.
3. DELETED
4. 2-TE-0172 AND 2-TE-0173 ETC. ARE FURNISHED WITH RC PUMPS.
5. 3/8 " ID FLOW RESTRICTOR PROVIDED FOR CLASS 1 - CLASS 2 TRANSITION SIMILAR TO ARRANGEMENT SHOWN IN NOTE 15 ON MECHANICAL SYMBOLS AND NOTES SHEET DRAWING M1-0200.
6. FOR MECHANICAL NOTES AND SYMBOLS SEE DRAWING M1-0200.
7. DELETED
8. 3 IN DIA DELAY LINE - 24 FT LONG.
9. 3 IN 150 LB RAISED FACE FLANGE.
10. 150 LB FLANGES TO PERMIT REMOVAL OF STANDPIPE FOR LEVEL SWITCH MAINTENANCE ON LOOPS 1, 2 AND 3 ONLY.
11. PIPING SHOULD BE SLOPED DOWNWARD FROM THIS POINT TO ASSURE 0 PSIG.
12. ALL DRAINS ON THIS DRAWING ARE DRAINED TO CHANNEL B, UNLESS OTHERWISE NOTED.

FSAR FIGURE 9.3-10

THIS DRAWING CREATED ELECTRONICALLY

CLASS I
(NUCLEAR SAFETY-RELATED)
SAFETY CLASS 1 SEISMIC CATEGORY I
SAFETY CLASS 2 CLASS 1E
SAFETY CLASS 3 ASSOCIATED CIRCUITS

TXU ELECTRIC
CPSES
GLEN ROSE, TEXAS

FLOW DIAGRAM
CHEMICAL AND VOLUME
CONTROL SYSTEM

DWG. NO.	SH. NO.	REV.
M2-0255	01	CP-7

SSSSSSDATESSSSS

me000199.dgn

CPE

REV	DWN	CHK	APVD	REMARKS
CP-15	DLK 02-04-2015			THIS DRAWING REVISED TO INCORPORATE AI-CR-2015-001056-1 TO EDITORIALLY REMOVE "MAIN EMERGENCY BORATE" FROM LINE NUMBER 3-CS-2-217-151R-2 EDITORIAL CHANGES AS NOTED.

NOTES:

1. FOR MECHANICAL SYMBOLS AND NOTES SEE DRAWING M1-0200.
2. ALL VENTS AND DRAINS ON THIS DRAWING DRAIN TO DRAIN CHANNEL B, UNLESS OTHERWISE NOTED.
3. DELETED
4. DELETED

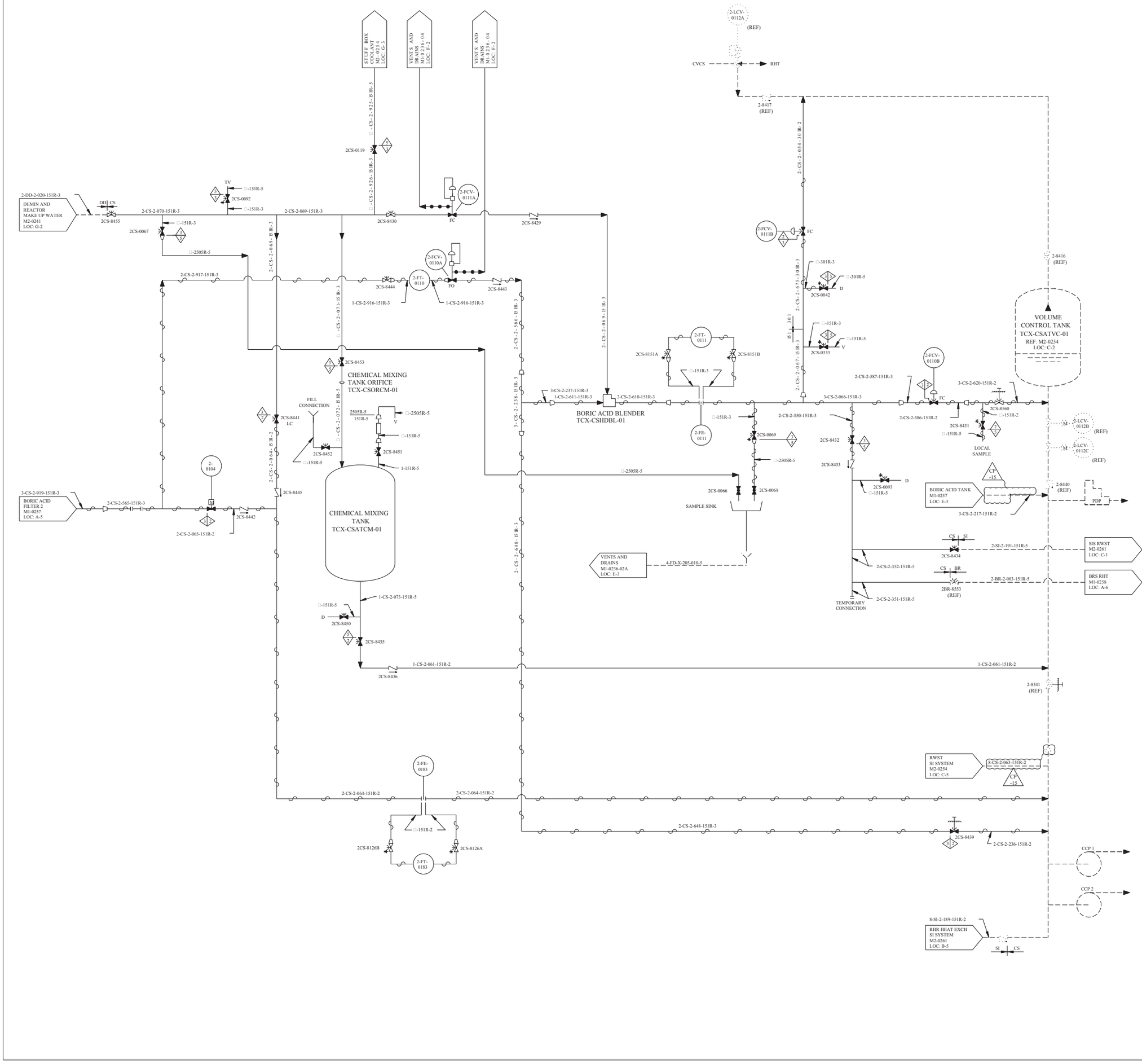

FSAR FIGURE 9.3-10

THIS DRAWING CREATED ELECTRONICALLY

CLASS I
(NUCLEAR SAFETY-RELATED)
SAFETY CLASS 1 — SEISMIC CATEGORY I
SAFETY CLASS 2 — CLASS 1E
SAFETY CLASS 3 — ASSOCIATED CIRCUITS

LUMINANT
CPNPP
GLEN ROSE, TEXAS

FLOW DIAGRAM
CHEMICAL AND VOLUME
CONTROL SYSTEM

DWG. NO.	SH. NO.	REV.
M2-0255	02	CP-15

$$$$$$$DATE$$$$$$ REF CHKD 11/04/2000

me0006el.dgn A M2-0255-02

< FINAL PRINT >

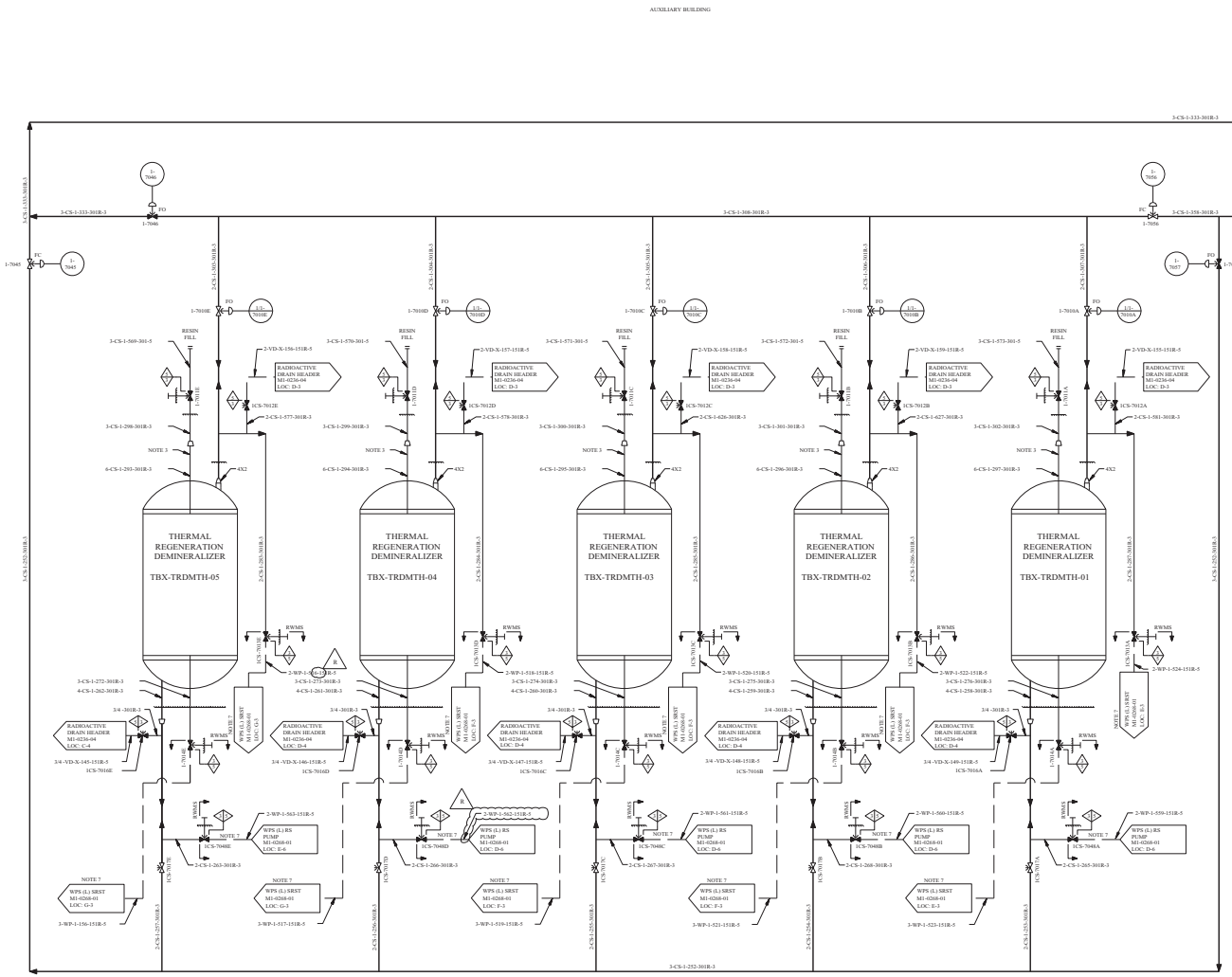

REV	DWN	CHKD	APVD	REMARKS
CP-11	JLK 10.31.2000			THIS DRAWING REVISED TO INCORPORATE DESIGN CHANGE FDA 2000-002923-01-00 PER SK-0001-00-002923-01-00.

NOTES:

1. ALL VALVES ALIGNED FOR BORON REMOVAL (DILUTION).
2. DELETED
3. 6 FEET OF 6 INCH PIPE PROVIDED BETWEEN DEMINERALIZER AND REDUCER.
4. DELETED
5. DELETED
6. DELETED
7. INDICATES RADIOACTIVE WASTE MANAGEMENT SYSTEM CONTINUES ON IDENTIFIED DRAWING.

REFERENCE DRAWINGS:

THIS FLOW DIAGRAM HAS BEEN REDRAWN FROM DWG 113[illegible]4, SH 4 REV 5 WITH THE EXCEPTION AS FOLLOWS:

a. VALVES AND LINE NUMBERS HAVE BEEN ADDED
b. CONTROL LOOPS HAVE BEEN DELETED EXCEPT FOR THE PRIMARY AND THE FINAL ELEMENTS. THE CONTROL LOOPS WILL BE SHOWN ON THE INSTUMENTATION AND CONTROL DIAGRAM

FSAR FIGURE 9.3-10

THIS DRAWING CREATED ELECTRONICALLY

DRAWING 2323-M1-0256 REV CP-5
HAS BEEN SPLIT INTO THE FOLLOWING SHEETS:

M1-0256
M1-0256-A

CLASS I
(NUCLEAR SAFETY-RELATED)
SAFETY CLASS 1 SEISMIC CATEGORY I
SAFETY CLASS 2 CLASS 1E
SAFETY CLASS 3 ASSOCIATED CIRCUITS

TXU ELECTRIC
CPSES
GLEN ROSE, TEXAS

FLOW DIAGRAM
CHEMICAL & VOLUME
CONTROL SYSTEM

DWG. NO. M1-0256 | SH. NO. - | REV. CP-11

FINAL PRINT

mz296300.dgn M1-0256

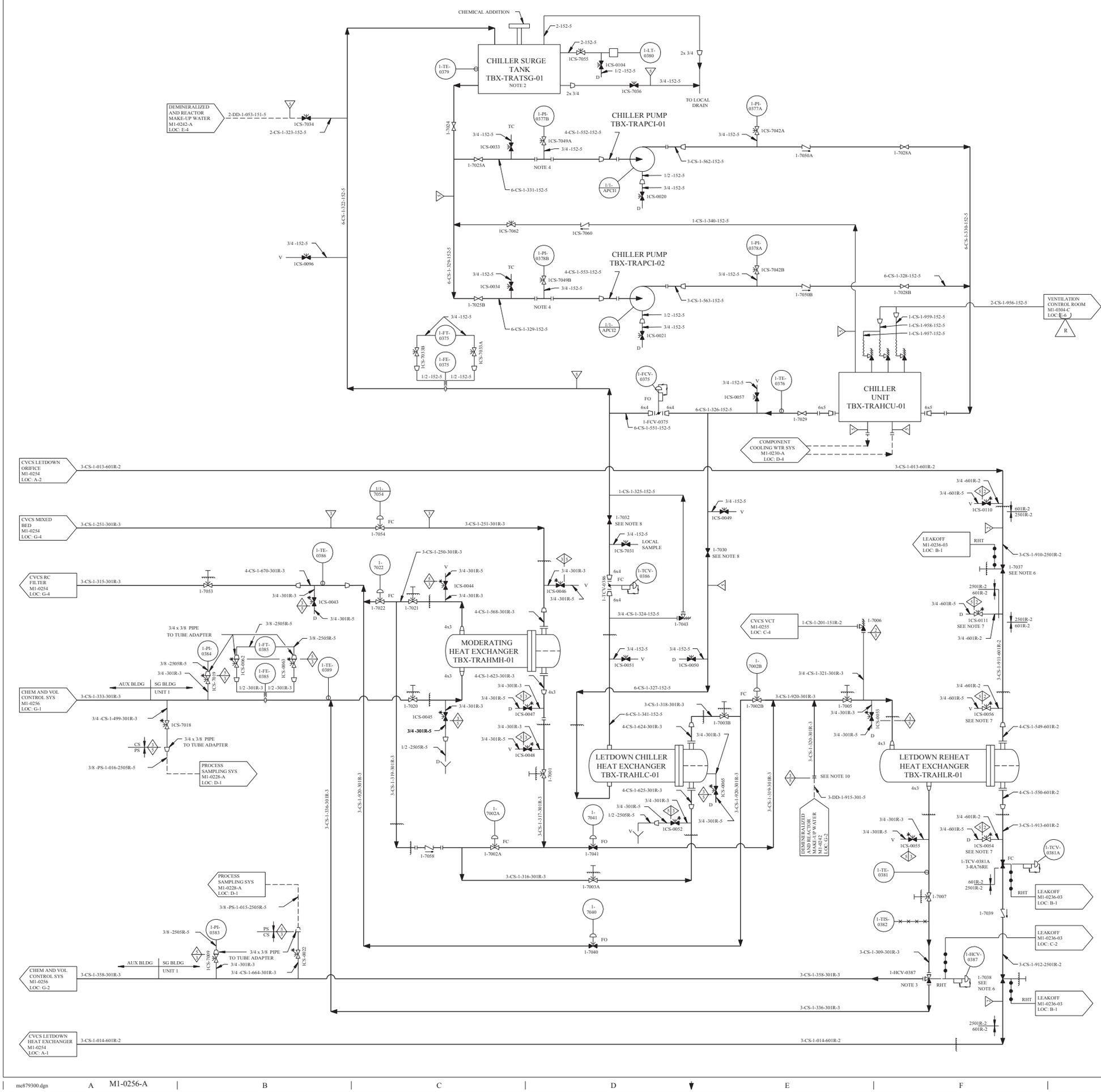
CHEMICAL ADDITION
CHILLER SURGE TANK TBX-TRATSG-01
NOTE 2
1-TE-0379
1-LT-0380
1CS-7055
1CS-0104
1CS-7036
TO LOCAL DRAIN
DEMINERALIZED AND REACTOR MAKE-UP WATER M1-0242-A LOC: E-4
2-DD-1-053-151-5
1CS-7034
2-CS-1-323-152-5
CHILLER PUMP TBX-TRAPCI-01
1-PI-0377B
1-PI-0377A
1CS-7042A
1CS-0033
1CS-7049A
1-7025A
1-7050A
1-7028A
3-CS-1-562-152-5
1/1-APC11
1CS-0020
1-CS-1-340-152-5
1CS-7062
1CS-7060
6-CS-1-332-152-5
6-CS-1-330-152-5
1CS-0096
CHILLER PUMP TBX-TRAPCI-02
1-PI-0378B
1-PI-0378A
1CS-7042B
1CS-0034
1CS-7049B
1-7025B
1-7050B
1-7028B
3-CS-1-563-152-5
6-CS-1-329-152-5
6-CS-1-328-152-5
1/1-APC12
1CS-0021
2-CS-1-956-152-5
VENTILATION CONTROL ROOM M1-0304-C LOC: E-6
1-FT-0375
1-FE-0375
1CS-7033B
1CS-7033A
1-FCV-0375
1-CS-1-959-152-5
1-CS-1-958-152-5
1-CS-1-957-152-5
1-TE-0376
1CS-0057
1-7029
CHILLER UNIT TBX-TRAHCU-01
COMPONENT COOLING WTR SYS M1-0230-A LOC: D-4
1-FCV-0375
6-CS-1-551-152-5
6-CS-1-326-152-5
CVCS LETDOWN ORIFICE M1-0254 LOC: A-2
3-CS-1-013-601R-2
1/1-7054
CVCS MIXED BED M1-0254 LOC: G-4
3-CS-1-251-301R-3
1-7054
1-CS-1-325-152-5
1-7032 SEE NOTE 8
1CS-7031
LOCAL SAMPLE
1-7030 SEE NOTE 8
1CS-0049
1CS-0110
601R-2
2501R-2
LEAKOFF M1-0236-03 LOC: B-1
1-7037 SEE NOTE 6
CVCS RC FILTER M1-0254 LOC: G-4
3-CS-1-315-301R-3
1-7053
1-TE-0386
1-7022
1-7021
3-CS-1-250-301R-3
1CS-0044
1CS-0043
1CS-0046
1-TCV-0386
1-7043
1CS-0111 SEE NOTE 7
3/8 x 3/8 PIPE TO TUBE ADAPTER
1-PI-0384
1-FT-0385
1-FE-0385
1CS-0062
1CS-0063
1-TE-0389
AUX BLDG
SG BLDG
UNIT 1
CHEM AND VOL CONTROL SYS M1-0256 LOC: G-1
3-CS-1-333-301R-3
MODERATING HEAT EXCHANGER TBX-TRAHMH-01
1-7020
1CS-0045
1CS-0047
1CS-0048
1-7001
1CS-7018
PROCESS SAMPLING SYS M1-0228-A LOC: D-1
CVCS VCT M1-0255 LOC: C-4
1-CS-1-201-151R-2
1-7006
1-7002B
3-CS-1-321-301R-3
3-CS-1-911-601R-2
1-7005
1CS-0053
1CS-0056 SEE NOTE 7
4-CS-1-549-601R-2
3-CS-1-920-301R-3
3-CS-1-318-301R-3
6-CS-1-341-152-5
4-CS-1-624-301R-3
1-7003B
LETDOWN CHILLER HEAT EXCHANGER TBX-TRAHLC-01
LETDOWN REHEAT HEAT EXCHANGER TBX-TRAHLR-01
4-CS-1-550-601R-2
3-CS-1-913-601R-2
1CS-0054 SEE NOTE 7
1-TCV-0381A
1-TCV-0381A 3-RA76RE
1-TE-0381
1-7007
1-7039
LEAKOFF M1-0236-03 LOC: B-1
1-TIS-0382
LEAKOFF M1-0236-03 LOC: C-2
3-CS-1-912-2501R-2
1-HCV-0387
1-7038 SEE NOTE 6
3-CS-1-309-301R-3
1-HCV-0387
NOTE 3
3-CS-1-910-2501R-2
3-CS-1-319-301R-3
3-CS-1-320-301R-3
SEE NOTE 10
3-DD-1-915-301-5
DEMINERALIZED AND REACTOR MAKE-UP WATER M1-0242-A LOC: G-2
4-CS-1-625-301R-3
1CS-0052
1-7041
1-7002A
1-7058
3-CS-1-316-301R-3
1-7003A
1-7040
3-CS-1-336-301R-3
3-CS-1-920-301R-3
3-CS-1-317-301R-3
3-CS-1-319-301R-3
3-CS-1-358-301R-3
3-CS-1-664-301R-3
3-CS-1-014-601R-2
CVCS LETDOWN HEAT EXCHANGER M1-0254 LOC: A-1
3-PS-1-016-2505R-5
3-PS-1-015-2505R-5
1-PI-0383
1CS-7009
1CS-4022
1-7031
1-7036
1-7042
1-7044
1-7045
1-7046
1-7047
1-7048
1-7049
1-7052
1-7053
1-7055
1-7056
1-7057
1-7059
1-7061
1-7063
1-7064
1-7065
1-7066
1-7067
1-7068
1-7069
1-7070
1-7071
1-7072
1-7073
1-7074
1-7075
1-7076
1-7077
1-7078
1-7079
1-7080
1-7081
1-7082
1-7083
1-7084
1-7085
1-7086
1-7087
1-7088
1-7089
1-7090
1-7091
1-7092
1-7093
1-7094
1-7095
1-7096
1-7097
1-7098
1-7099
1-7100
1-7101
1-7102

REV	DWN	CHKD	APVD	REMARKS
CP-14	MHF 08-15 2006	DLK 08-15 2006		THIS DRAWING REVISED TO INCORPORATE DESIGN CHANGE FDA 2002-002085-01-00 PER SK-0009-02-002085-01-00

NOTES:

1. ALL VALVES SHOWN ALIGNED FOR BORON REMOVAL (DILUTION).
2. CHILLER SURGE TANK IS LOCATED AT HIGH POINT IN THE CHILLER CIRCUIT.
3. THREE-WAY VALVE SHOULD BE ORIENTED IN PIPING AS SHOWN SO FAILURE IS WITH FLOW TO DEMINERALIZERS.
4. TEMPORARY STRAINERS CP2-CSSRTS-04 AND CP2-CSSRTS-05 ARE PLACED IN SPOOL PIECE DURING INITIAL FLUSHING OPERATION. STRAINER MUST BE REMOVED BEFORE PLANT START-UP. THE TEMPORARY STRAINERS CAN BE RE-INSTALLED FOR POST MAINTENANCE ACTIVITY.
5. FOR MECHANICAL SYMBOLS AND NOTES SEE DRAWING M1-0200.
6. DELETED
7. ALL DRAINS ON THIS DRAWING ARE DRAINED TO DRAIN CHANNEL B UNLESS OTHERWISE NOTED.
8. RELIEF VALVES BY VENDOR.
9. THIS VALVE IS CLOSED WHEN THE TUBE SIDE OF THE LETDOWN REHEAT HEAT EXCHANGER IS ISOLATED AND DRAINED.
10. THIS VALVE IS OPEN WHEN THE TUBE SIDE OF THE LETDOWN REHEAT HEAT EXCHANGER IS ISOLATED AND DRAINED.
11. VALVES CLOSED WHILE SYSTEM IS IN LAYUP.
12. VALVE 2-7004 HAS BEEN REMOVED AND A BLIND FLANGE HAS BEEN INSTALLED IN ITS PLACE PER FDA 2002-002085-01.

R

FSAR FIGURE 9.3-10

THIS DRAWING CREATED ELECTRONICALLY

CLASS I
(NUCLEAR SAFETY-RELATED)
SAFETY CLASS 1 — SEISMIC CATEGORY I
SAFETY CLASS 2 — CLASS 1E
SAFETY CLASS 3 — ASSOCIATED CIRCUITS

LUMINANT
CPSES
GLEN ROSE, TEXAS

FLOW DIAGRAM
CHEMICAL AND VOLUME
CONTROL SYSTEM

DWG. NO.	SH. NO.	REV.
M2-0256	A	CP-14

REF CKD 318/97 CP-8

me871700.dgn A M2-0256-A B C D E F G FINAL PRINT H

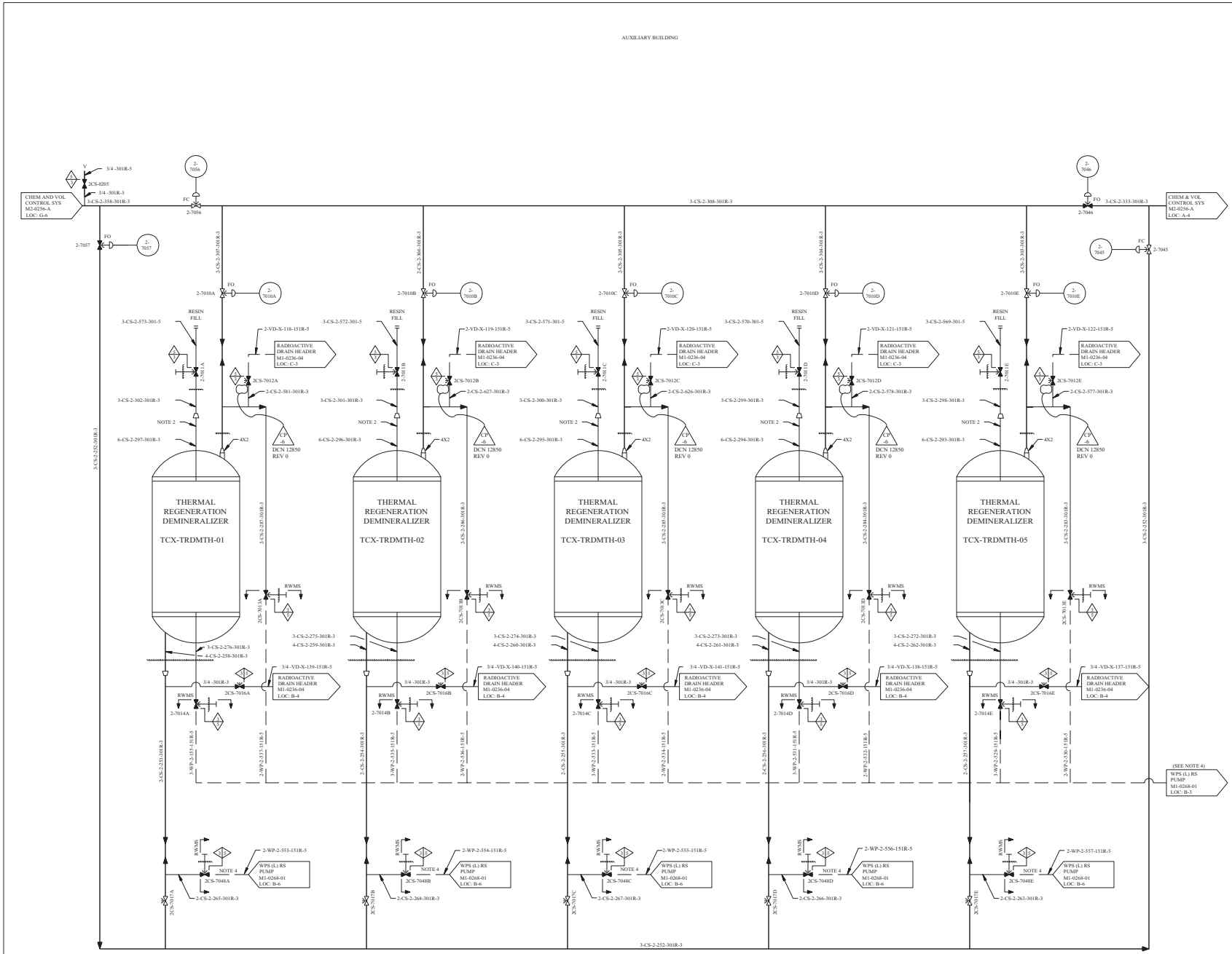

REV	DWN	CHKD	APVD	REMARKS
CP-6	CA 08-06-1991			THIS DRAWING REVISED TO INCORPORATE DESIGN CHANGE DCN 12850 REV 0.

NOTES

1. ALL VALVES SHOWN ALIGNED FOR BORON REMOVAL (DILUTION).
2. 6 FEET OF 6 INCH PIPE PROVIDED BETWEEN DEMINERALIZER AND REDUCER.
3. FOR MECHANICAL SYMBOLS AND NOTES SEE DRAWING M1-0200.
4. DENOTES RADIOACTIVE WASTE MANAGEMENT SYSTEMS CONTINUES ON IDENTIFIED DRAWING.
5. ALL DRAINS ON THIS DRAWING ARE DRAINED TO DRAIN CHANNEL B UNLESS OTHERWISE NOTED.
6. DURING UNIT 2 CONSTRUCTION, UNIT 2 PIPING IS TO BE PHYSICALLY ISOLATED FROM UNIT 1 PIPING BY REMOVAL OF A SECTION OF PIPE TO PROVIDE AN INTERIM PIPING CONFIGURATION. END CONNECTIONS SHALL BE INSTALLED AS INDICATED ON THE PIPING ISOMETRIC DRAWING. THE FINAL DESIGN CONFIGURATION, FOR UNIT 2 OPERATION SHALL REFLECT WELDED PIPE.

FSAR FIGURE 9.3-10

THIS DRAWING CREATED ELECTRONICALLY

CLASS I
(NUCLEAR SAFETY-RELATED)
SAFETY CLASS 1 SEISMIC CATEGORY I
SAFETY CLASS 2 CLASS 1E
SAFETY CLASS 3 ASSOCIATED CIRCUITS

TXU ELECTRIC
CPSES
GLEN ROSE, TEXAS

FLOW DIAGRAM
CHEMICAL AND VOLUME
CONTROL SYSTEM

DWG. NO.	SH. NO.	REV.
M2-0256	B	CP-6

SSSSSSDATESSSSSS

me0001i3.dgn

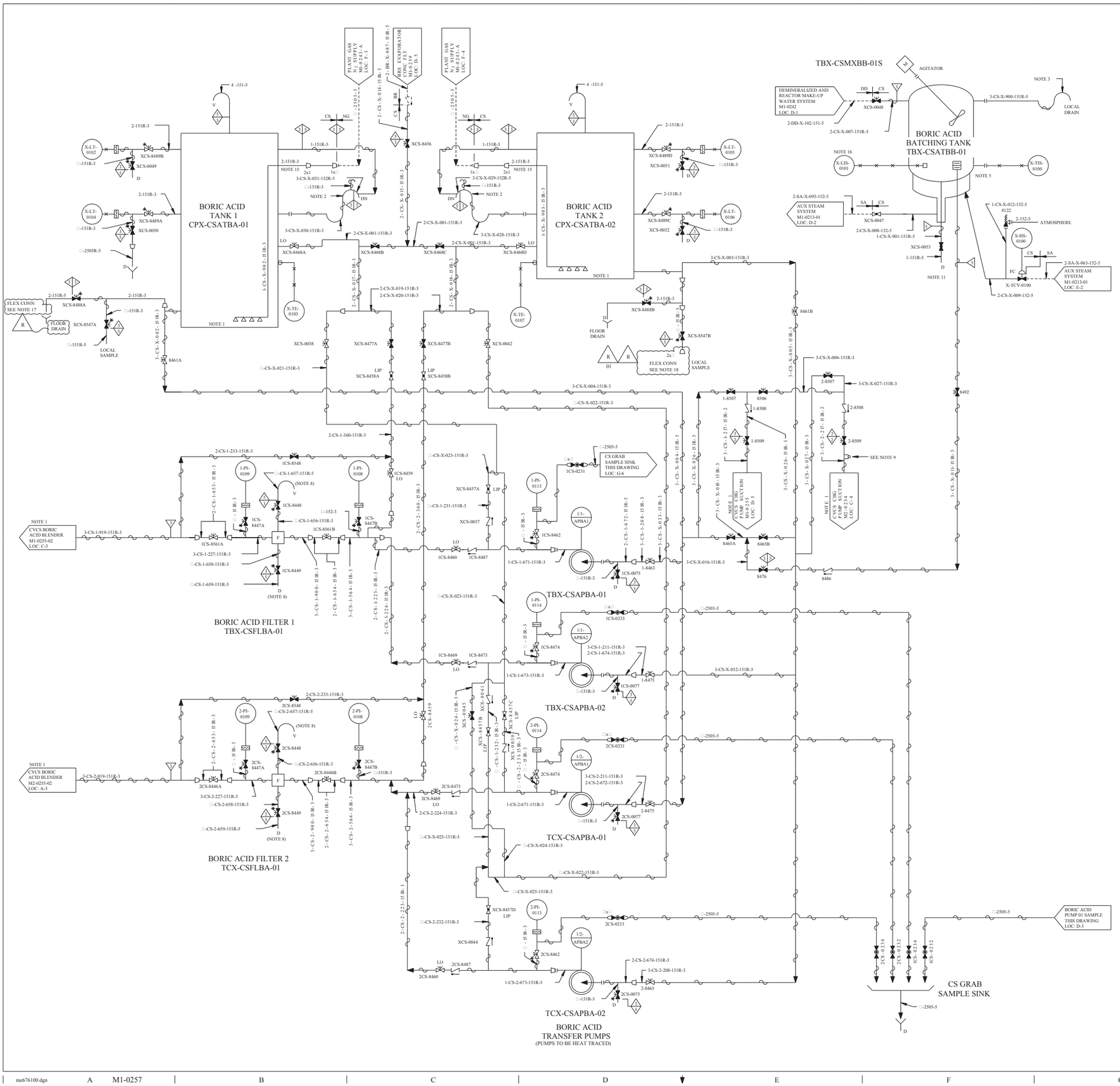

REV	DWN	CHKD	APVD	REMARKS
CP-32	DLK 10-13 2014	SM 10-13 2014		THIS DRAWING REVISED TO INCORPORATE DESIGN CHANGE FDA 2013-000008-05-02 PER SK-0007-000008-05-02.

NOTES:

1. ALL EQUIPMENT AND PIPING SHOWN TO BE MAINTAINED AT A MINIMUM TEMPERATURE OF 65□ F.
2. LOWER LOOP TO EXTEND 12 INCHES BELOW NOZZLE. UPPER LOOP TO EXTEND TO 6 INCHES BELOW THE DIAPHRAGM FLANGE DIRECT OVERFLOW INTO FUNNEL SYPHON BREAK LOCATED AT TOP OF PIPE.
3. LOOP SEAL TO EXTEND 12 INCHES BELOW AND ABOVE OVERFLOW NOZZLE.
4. FOR MECHANICAL SYMBOLS AND NOTES SEE DRAWING M1-0200.
5. TEMPERATURE WELL WITH FLANGE PROVIDED.
6. INDICATES HERMETICALLY SEALED VALVE.
7. INDICATES HEAT TRACED.
8. FILTER VENT AND DRAIN LINES ROUTED TO FLOOR DRAIN IN FILTER COMPARTMENT.
9. PLUGGED □ INCH SOCKET WELD CONNECTION.
10. UNLESS OTHERWISE NOTED ALL DRAINS COLLECTED BY LOCAL DRAIN SYSTEM TO DRAIN CHANNEL B.
11. DRAIN LINE TO BE USED AS A LOCAL SAMPLE LINE.
12. DELETED
13. DELETED
14. DELETED
15. REDUCER IS DRILLED OUT TO ONE INCH PIPE DIAMETER. LINE 1-CS-X-902-151R-3 ON TANK 1 AND 1-CS-X-903-151R-3 ON TANK 2 EXTENDS THROUGH THE TWO INCH PIPE AND REDUCER TO CONNECT WITH A 1"x□" REDUCER COUPLING.
16. X-LIS-0101 (PRESSURE BOUNDARY ONLY): ALL WIRING DETERMINATED VIA DCN 0656 REV 0 AND DCN 0665 REV 0.
17. FLEX CONNECTION - STORZ CONNECTION MAINTAINED IN FLEX EQUIPMENT STORAGE BUILDING (X-FX-2K19).
18. FLEX CONNECTION - MAY BE A PIPE CAP OR STORZ CONNECTION.

REFERENCE NOTE:

THIS FLOW DIAGRAM HAS BEEN REDRAWN FROM WESTINGHOUSE DRAWING 1138E96 REV 6 WITH EXCEPTIONS AS FOLLOWS:

a. VALVE AND LINE NUMBERS HAVE BEEN ADDED.

b. CONTROL LOOPS HAVE BEEN DELETED EXCEPT FOR THE PRIMARY AND THE FINAL ELEMENTS. THE DETAILS OF THE CENTRAL LOOPS WILL BE SHOWN ON INSTRUMENTATION AND CONTROL DIAGRAM.

FSAR FIGURE 9.3-10

THIS DRAWING CREATED ELECTRONICALLY

CLASS I

(NUCLEAR SAFETY-RELATED)

SAFETY CLASS 1	SEISMIC CATEGORY I
SAFETY CLASS 2	CLASS 1E
SAFETY CLASS 3	ASSOCIATED CIRCUITS

LUMINANT
CPNPP
GLEN ROSE, TEXAS

FLOW DIAGRAM
CHEMICAL AND VOLUME
CONTROL SYSTEM (COMMON)

DWG. NO.	SH. NO.	REV.
M1-0257	-	CP-32

$$$$$$$$DATE$$$$$$$ REF CKD 6-1-98 CP-24

me676100.dgn A M1-0257 B C D E F G < FINAL PRINT > H

REV	DWN	CHKD	APVD	REMARKS
CP-31	JRMC 05-08-2014	DJL 05-07-2014		THIS DRAWING REVISED TO INCORPORATE DESIGN CHANGE FDA 2014-000109-01-00 PER SK-0001-14-000109-01-00.

NOTES:

1. RHT LEVEL INDICATION MUST BE VISIBLE FROM RE FEED PUMP LOCAL CONTROL.
2. QUICK DISCONNECT COUPLING TO MATE WITH HALF COUPLING PROVIDED WITH SAMPLE VESSEL.
3. LOWER LOOP TO EXTEND 20 INCHES BELOW OVERFLOW CONNECTION AND UPPER LOOP 6 INCHES BELOW DIAPHRAGM FLANGE. LOCATE SYPHON BREAK VENT ON TOP OF UPPER LOOP.
4. HIGH POINT OF PIPE CROSS CONNECTION BETWEEN RHT'S TO BE 12 INCHES BELOW DIAPHRAGM FLANGE.
5. LOCATE THESE CONNECTIONS AS CLOSE TOGETHER AS POSSIBLE.
6. ORIENT 3-WAY VALVE AS SHOWN SO IT FAILS WITH FLOW TO THE RECYCLE EVAPORATOR FILTER.
7. LOCATE CLOSE TO WPS (G) GAS COMPRESSOR.
8. FOR MECHANICAL SYMBOLS AND NOTES SEE DRAWING M1-0200.
9. 400 LB RF FLANGE TO MATCH 400 LB FLANGE ON RESIN FILL TANK.
10. FILTER VENT AND DRAIN LINES ROUTED TO FLOOR DRAIN IN FILTER COMPARTMENT.
11. DELETED
12. PROTECT TURBINE METER FROM CONDENSATE IN DRAINAGE BY INSTALLING 1T AT A LOCAL HIGH POINT. SLOPE INLET AND OUTLET PIPING DOWNWARD FROM THE METER.
13. DENOTES RADIOACTIVE WASTE MANAGEMENT SYSTEM CONTINUES ON IDENTIFIED DRAWINGS.
14. FLOW DIAGRAM REDRAWN FROM WESTINGHOUSE DRAWING 1138E95 SH 1, REV 4 AND DESIGN VERIFIED AGAINST LATEST ISSUED REVISION, REV 7.

RECYCLE EVAPORATOR FEED DEMINERALIZER TBX-BRDMRE-01

RECYCLE EVAPORATOR FEED DEMINERALIZER TBX-BRDMRE-02

RECYCLE EVAPORATOR FEED FILTER TBX-BRFLRE-01

RECYCLE EVAPORATOR FEED FILTER TBX-BRFLRE-02

RECYCLE HOLDUP TANK 1 CPX-BRATRH-01

RECYCLE HOLDUP TANK 2 CPX-BRATRH-02

RECYCLE EVAPORATOR FEED PUMP 1 TBX-BRAPRE-01

RECYCLE EVAPORATOR FEED PUMP 2 TBX-BRAPRE-02

RECYCLE HOLDUP TANK VENT EJECTOR TBX-BREJHT-01

CLASS II

LUMINANT
CPNPP
GLEN ROSE, TEXAS

FLOW DIAGRAM
BORON RECYCLE SYSTEM

DWG. NO.	SH. NO.	REV.
M1-0258	-	CP-31

FSAR FIGURE 9.3-11

THIS DRAWING CREATED ELECTRONICALLY

REF CKD 2/6/97 CP-24

$$$$$$$ DATE $$$$$$$

me990500.dgn M1-0258 < FINAL PRINT >

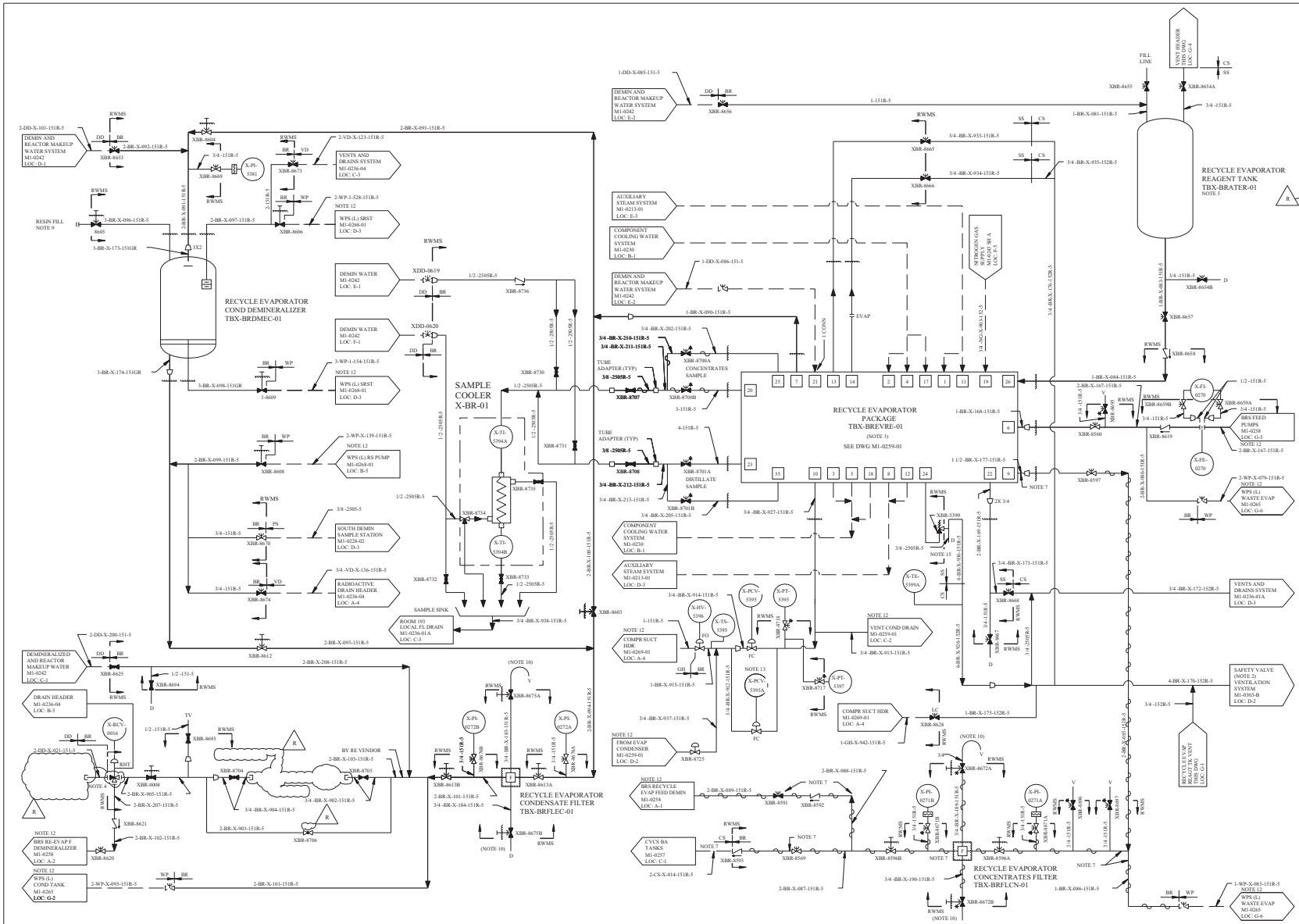

REV	DWN	CHKD	APVD	REMARKS
CP-23	MHF 02-22-2002	SA 02-22-2002		THIS DRAWING REVISED TO INCORPORATE DESIGN CHANGE FDA-1999-003471-01-00 PER SK-0019-99-003471-01-00.

NOTES

1. SEE M1-0200 FOR MECHANICAL NOTES AND SYMBOLS.
2. CONNECTION PERMANENTLY CONNECTED TO PLANT VENT UPSTREAM OF RADIATION MONITOR RT-014.
3. RECYCLE EVAPORATOR PACKAGE TBX-BREVRE-01 WAS FURNISHED BY WESTINGHOUSE. SEE VENDOR DWG 730376 FOR DIMENSIONAL OUTLINE AND CONNECTION SIZES. REFERENCE P.O. CP-0001 AND S.O. 232. SEE M1-0259-01 AND M1-2259 SERIES FOR PIPING AND INSTRUMENTATION.
4. THREE-WAY VALVE SHOULD BE ORIENTED IN PIPING AS SHOWN SO THAT VALVE FAILS WITH FLOW TO THE RECYCLE EVAPORATOR FEED DEMINERALIZER.
5. LOCATE REAGENT TANK AND PIPING TO ALLOW FOR GRAVITY DRAIN INTO EVAPORATOR.
6. MUST BE ROUTED THRU SFPC'S DEMINERALIZERS AND FILTER.
7. THIS EQUIPMENT AND PIPING TO BE HEAT TRACED.
8. DELETED
9. 400 LB RF FLANGE TO MATCH 400 LB FLANGE ON RESIN FILL TANK.
10. FILTER VENT AND DRAIN LINES ROUTED TO FLOOR DRAIN IN FILTER COMPARTMENT.
12. DENOTES RADIOACTIVE WASTE MANAGEMENT SYSTEM CONTINUES ON IDENTIFIED DRAWING.
13. LOCATE PRESS SENSOR TAP FOR THESE TWO PCV'S UPSTREAM OF THESE PCV'S ON LINE NUMBER 3/4 -BR-X-927-151R-5.
14. DELETED
15. NON-NUCLEAR SAFETY CLASS 3/8 " SS TUBING SHALL BE INSTALLED PER SPECIFICATION CPES-I-1017.
16. DELETED

REFERENCE DRAWINGS

THIS FLOW DIAGRAM HAS BEEN REDRAWN FROM WESTINGHOUSE DRAWING 1138E95 (SH 2) REV '7 WITH EXCEPTIONS AS FOLLOWS:

a) VALVES AND LINES NUMBERS HAVE BEEN ADDED.

b) CONTROL LOOPS HAVE BEEN DELETED EXCEPT FOR THE PRIMARY AND THE FINAL ELEMENTS. THE DETAILS OF THE CONTROL LOOPS WILL BE SHOWN ON INSTRUMENTATION AND CONTROL DIAGRAM.

FSAR FIGURE 9.3-11

THIS DRAWING CREATED ELECTRONICALLY

DRAWING M1-0259 REV CP-15
HAS BEEN SPLIT INTO THE FOLLOWING SHEETS:
M1-0259
M1-0259-A

CLASS II

TXU ENERGY
CPSES
GLEN ROSE, TEXAS

FLOW DIAGRAM
BORON RECYCLE SYSTEM

DWG. NO.	SH. NO.	REV.
M1-0259	-	CP-23

FINAL PRINT

REF CKD 1/21/97 CP-21

me421400.dgn M1-0259

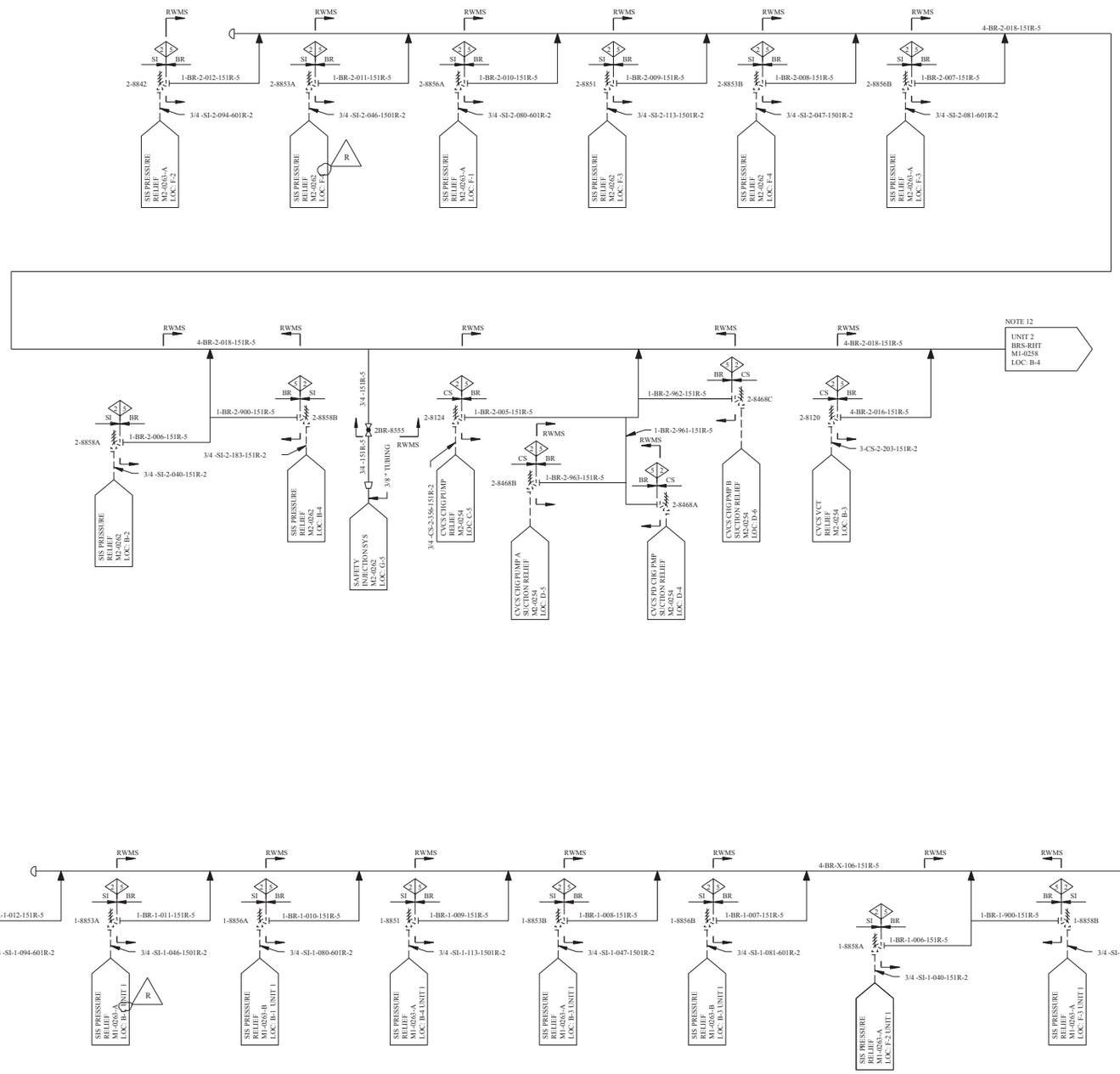

REV	DWN	CHK	APVD	REMARKS
CP-8	DLK 06-08-2009	EES 06-08-2009		THIS DRAWING REVISED TO INCORPORATE DESIGN CHANGE FDA 2009-002540-01-00 PER SK-0001-09-002540-01-00.

NOTES:

1. SEE M1-0200 FOR MECHANICAL NOTES AND SYMBOLS.
2. DELETED
3. DELETED
4. DELETED
5. DELETED
6. DELETED
7. DELETED
8. DELETED
9. DELETED
10. DELETED
12. DENOTES RADIOACTIVE WASTE MANAGEMENT SYSTEM CONTINUES ON IDENTIFIED DRAWING.
13. DELETED
14. DELETED
15. DELETED
16. DELETED

REFERENCE DRAWINGS:

THIS FLOW DIAGRAM HAS BEEN REDRAWN FROM WESTINGHOUSE DRAWING 1138E95 (SH 2) REV 7 WITH EXCEPTIONS AS FOLLOWS:

a) VALVES AND LINES NUMBERS HAVE BEEN ADDED.

b) CONTROL LOOPS HAVE BEEN DELETED EXCEPT FOR THE PRIMARY AND THE FINAL ELEMENTS. THE DETAILS OF THE CONTROL LOOPS WILL BE SHOWN ON INSTRUMENTATION AND CONTROL DIAGRAM.

REFERENCE DRAWINGS:

THIS FLOW DIAGRAM HAS BEEN REDRAWN FROM WESTINGHOUSE DRAWING 1138E95 (SH 2) REV 7 WITH EXCEPTIONS AS FOLLOWS:

a) VALVES AND LINES NUMBERS HAVE BEEN ADDED.

b) CONTROL LOOPS HAVE BEEN DELETED EXCEPT FOR THE PRIMARY AND THE FINAL ELEMENTS. THE DETAILS OF THE CONTROL LOOPS WILL BE SHOWN ON INSTRUMENTATION AND CONTROL DIAGRAM.

FSAR FIGURE 9.3-11

THIS DRAWING CREATED ELECTRONICALLY

DRAWING M1-0259 REV CP-15
HAS BEEN SPLIT INTO THE FOLLOWING SHEETS:
M1-0259
M1-0259-A

CLASS II

LUMINANT
CPNPP
GLEN ROSE, TEXAS

FLOW DIAGRAM
BORON RECYCLE SYSTEM

DWG. NO.	SH. NO.	REV.
M1-0259	A	CP-8

$$$$$$$$DATE$$$$$$$$

me931000.dgn M1-0259-A

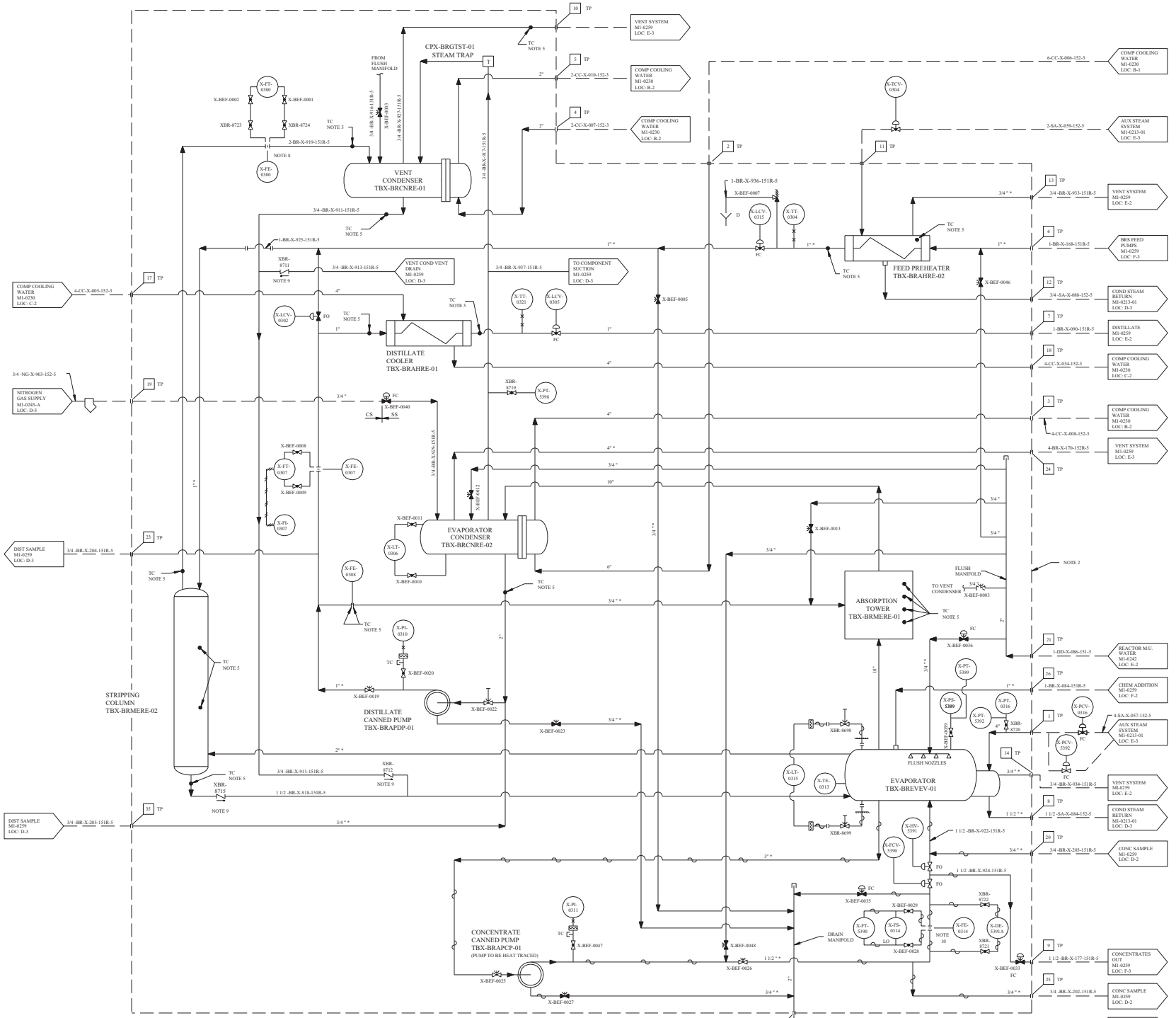

REV	DWN	CHKD	APVD	REMARKS
CP-10	RMS 05-24 1996			THIS DRAWING REVISED TO ADD THE FSAR FIGURE NUMBER AS AN EDITORIAL CHANGE.

NOTES:

1. FOR MECHANICAL NOTES AND SYMBOLS SEE DRAWING M1-0200.
2. 15 GPM RECYCLE EVAPORATOR SUPPLY BY WESTINGHOUSE DRAWING 4667D56 PIPING AND EQUIPMENT SUPPLIED ON A SKID, SHOP ORDER NUMBER 232 WNES SPIN NUMBER TBX-BREVRE-01.
3. ALL LINES MARKED WITH * ARE CLASS 151R. THIS IS A DESIGNATION ONLY AND NO ADDITIONAL INSPECTION HAS BEEN PERFORMED ON THIS PIPING. ALL OTHER PIPE IS CLASS 151.
4. TP INDICATES "TERMINAL POINT" AND NOZZLE NUMBER ON EVAPORATOR, SEE WESTINGHOUSE DRAWING 7301376, R-10.
5. TC INDICATES "TEST CONNECTIONS" FOR FIELD TEST, 1/2 " NPT PLUGGED BOSSES.
6. FOR INSTALLATION DETAILS OF INSTRUMENTATION FOR THE EVAPORATOR SKID, SEE WESTINGHOUSE DRAWING 7373884, R-1A.
7. FOR EQUIPMENT LOGIC DIAGRAM SEE INSTRUMENTATION AND CONTROL DIAGRAM NUMBER M1-2259-SERIES.
8. INSTALL ORIFICE IN VERTICAL SECTION IMMEDIATELY ABOVE THE VENT CONDENSER.
9. REMOVE INTERNAL SPRING FROM XBR-8711, XBR-8712 AND XBR-8715.
10. REPLACED WITH A NEW ORIFICE PLATE PER DCA 80218 REV 2.

FSAR FIGURE 9.3-11

CP 10

THIS DRAWING CREATED ELECTRONICALLY

CLASS I
(NUCLEAR SAFETY-RELATED)
SAFETY CLASS 1 SEISMIC CATEGORY I
SAFETY CLASS 2 CLASS 1E
SAFETY CLASS 3 ASSOCIATED CIRCUITS

TXU ELECTRIC
CPSES
GLEN ROSE, TEXAS

FLOW DIAGRAM
BORON RECYCLE SYSTEM

DWG. NO.	SH. NO.	REV.
M1-0259	01	CP-10

vs0000cu.dgn

SSSSSSDATESSSSSS

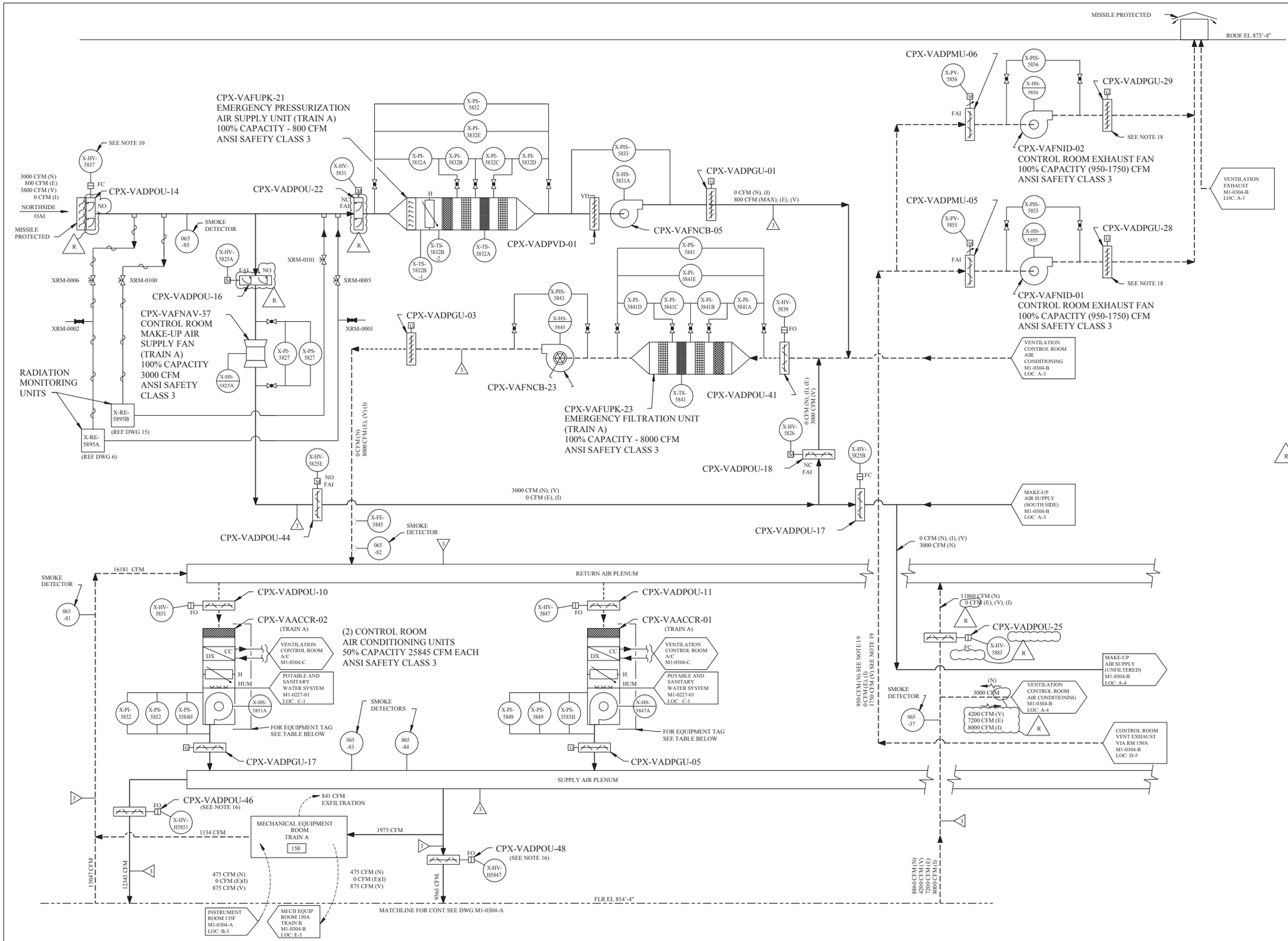

CONTROL ROOM AIR CONDITIONING SYSTEM
SAFETY CLASS 3 (EXCEPT AS NOTED)

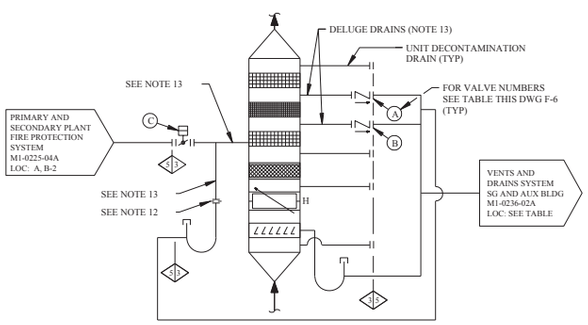

TYPICAL DELUGE AND DRAIN CONNECTION
FOR EMERGENCY PRESSURIZATION UNITS

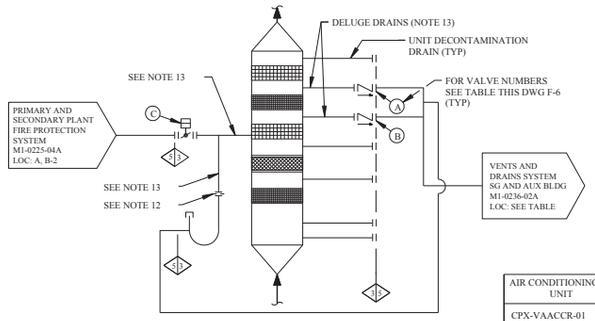

TYPICAL DELUGE AND DRAIN CONNECTION
FOR EMERGENCY FILTRATION UNITS

FILTRATION UNIT NUMBER	DELUGE DRAIN VALVES		DELUGE SUPPLY VALVE	DRAIN CONNECTION REFERENCE DWG AND LOCATION
	(A)	(B)	(C)	
CPX-VAFUPK-21	CPX-VADPCK-37	CPX-VADPCK-38	XFP-0654	M1-0236-02A LOC: G-2
CPX-VAFUPK-23	CPX-VADPCK-41	CPX-VADPCK-42	XFP-0656	M1-0236-02A LOC: G-2

AIR CONDITIONING UNIT	PREFILTER	COOLING COIL	ELECTRIC HEATER	CENTRIFUGAL FAN	HUMIDIFIER	CONDENSER	COMPRESSOR
CPX-VAACCR-01	CPX-VAACCR-01A	CPX-VAACCR-01B	CPX-VAACCR-01H	CPX-VAACCR-01D	CPX-VAACCR-01E	CPX-VAACCR-01F	CPX-VAACCR-01G
CPX-VAACCR-02	CPX-VAACCR-02A	CPX-VAACCR-02B	CPX-VAACCR-02H	CPX-VAACCR-02D	CPX-VAACCR-02E	CPX-VAACCR-02F	CPX-VAACCR-02G

REV	DWN	CHK	APVD	REMARKS
CP-34	MM 11-10 2005	DLK 11-10 2005		THIS DRAWING REVISED TO INCORPORATE DESIGN CHANGE FDA 2001-002847-01-03 PER SK-0021-01-002847-01-00.

NOTES:

1. THIS DIAGRAM IS A SCHEMATIC REPRESENTATION AND IS INTENDED TO SHOW GENERAL AIR DISTRIBUTION AND FLOW PATHS. AIR FLOWS MAY VARY SLIGHTLY DEPENDING ON OPERATING AIR CONDITIONERS.
2. BALANCING DAMPERS, REGISTERS, DIFFUSERS, FLEXIBLE CONNECTIONS AND ALL OTHER RELATED ACCESSORIES NOT SHOWN ON THIS DIAGRAM SHALL BE PROVIDED AS INDICATED ON THE HVAC ARRANGEMENT DRAWINGS AND SPECIFICATIONS.
3. FOR ABBREVIATIONS AND SYMBOLS SEE DRAWINGS M1-0313 AND M1-0200.
4. DELETED
5. WORK THIS DRAWING WITH M1-0308.
6. THIS FLOW DIAGRAM IS COMMON FOR UNIT 1 AND 2.
7. THE CONTROL ROOM AREA WILL BE MAINTAINED AT A POSITIVE PRESSURE OF 0.125 INCHES WG.
8. THIS EXFILTRATION WILL OCCUR DURING EMERGENCY RECIRCULATION AND ISOLATION MODES WHEN THE KITCHEN AND TOILET EXHAUST FANS ARE NOT OPERATING.
9. DELETED
10. CONTROL VALVE HAS AN ASSOCIATED SAFETY CLASS 3 AIR ACCUMULATOR CPX-CICATHV-01 .
11. CONTROL VALVE HAS AN ASSOCIATED SAFETY CLASS 3 AIR ACCUMULATOR CPX-CIATHV-02 .
12. FOR DRAIN FLOW ORIFICE NUMBER AND LINE CONTINUATION SEE DRAWING M1-0225-04A LOC: A, B, C, & D-2
13. NOT WITHIN ASME CODE BOUNDARY.
14. AIR FLOW QUANTITIES SHOWN ARE BASED ON A DENSITY OF 0.075 LB/FT³ OCCURRING AT THE STANDARD CONDITION OF DRY AIR AT 70°F AND 29.92" HG BAROMETRIC PRESSURE. QUANTITIES IN PARENTHESES ARE ACTUAL AIR FLOW RATES BASED ON DENSITY AT DESIGN CONDITIONS.
15. MAXIMUM EXFILTRATION FROM CONTROL ROOM ENVELOPE DURING ALL MODES OF OPERATION EXCEPT ISOLATION MODE.
16. DAMPER MANUALLY POSITIONED FOR FLOW BALANCING PURPOSE.
17. DELETED
18. DAMPERS CPX-VADPGU-28 AND 29 WEIGHT AND ARM POSITIONS HAVE BEEN REPOSITIONED TO RETAIN .25 INCHES OF WATER PRESSURE PRIOR TO OPENING.
19. VALUES SHOWN ARE MINIMUM AIR FLOWS. ACTUAL AIR FLOW DEPENDS ON THE LEAK TIGHTNESS OF THE CONTROL ROOM PRESSURE BOUNDARY.
20. THE AMOUNT OF RETURN AIR FLOW WAS CALCULATED BASED ON EXISTING READINGS AS WELL AS NEW READINGS AND FROM TRAVERSE READINGS TAKEN DOWNSTREAM.

REFERENCES:

1. M1-0313	FLOW DIAGRAM VENTILATION AAP BLDG AND CONTROL BLDG UPS AREA A/C SYSTEMS
M1-0200	MECHANICAL SYMBOLS AND NOTES
3. M1-0308	FLOW DIAGRAM VENTILATION CONTROL ROOM AIR CONDITIONING
4. M1-0236-01 AND M1-0236-02	FLOW DIAGRAM VENTS AND DRAINS SYSTEM SAFEGUARDS AND AUXILIARY BUILDINGS
5. M1-0227	FLOW DIAGRAM POTABLE AND SANITARY WATER SYSTEM
6. ELD-353-1800	GENERAL ATOMIC COMPANY OUTLINE GAS SAMPLER WITH PUMP
7. M1-0788	PLUMBING AUXILIARY BUILDING PLANT AT EL 830'-0"
8. M1-0306	FLOW DIAGRAM VENTILATION TURBINE BUILDING
9. M2-0306	FLOW DIAGRAM VENTILATION TURBINE BUILDING
10. M1-0304-A	FLOW DIAGRAM VENTILATION CONTROL ROOM AIR CONDITIONING
11. M1-0304-B	FLOW DIAGRAM VENTILATION CONTROL ROOM AIR CONDITIONING
12. M1-0225-04	FLOW DIAGRAM PRIMARY AND SECONDARY PLANT FIRE PROTECTION SYSTEM
13. M2-0256	FLOW DIAGRAM CHEMICAL AND VOLUME CONTROL SYSTEM
14. M1-0229	FLOW DIAGRAM COMPONENT COOLING WATER SYSTEM
15. 353-1100	OUTLINE NOBLE GAS MONITOR (SORRENTO ELECTRONICS)

LEGEND:

(N) CFM FOR NORMAL OPERATION MODE
(E) CFM FOR EMERGENCY RECIRCULATION MODE
(V) CFM FOR EMERGENCY VENTILATION MODE
(I) CFM FOR ISOLATION MODE

DRAWING M1-0304 REV CP-12 HAS BEEN SPLIT INTO THE FOLLOWING SHEETS:
M1-0304
M1-0304-A

DRAWING M1-0304 REV CP-13 HAS BEEN SPLIT INTO THE FOLLOWING SHEETS:
M1-0304
M1-0304-B

DRAWING M1-0304 REV CP-20 HAS BEEN SPLIT INTO THE FOLLOWING SHEETS:
M1-0304
M1-0304-C
M1-0304-D

CLASS I
(NUCLEAR SAFETY-RELATED)
SAFETY CLASS 1, SAFETY CLASS 2, SAFETY CLASS 3
SEISMIC CATEGORY I
CLASS 1E
ASSOCIATED CIRCUITS

LUMINANT
CPSES
GLEN ROSE, TEXAS

FLOW DIAGRAM
VENTILATION CONTROL ROOM
AIR CONDITIONING

DWG NO. M1-0304 | SH. NO. - | REV. CP-34

FSAR FIGURE 9.4-1

THIS DRAWING CREATED ELECTRONICALLY

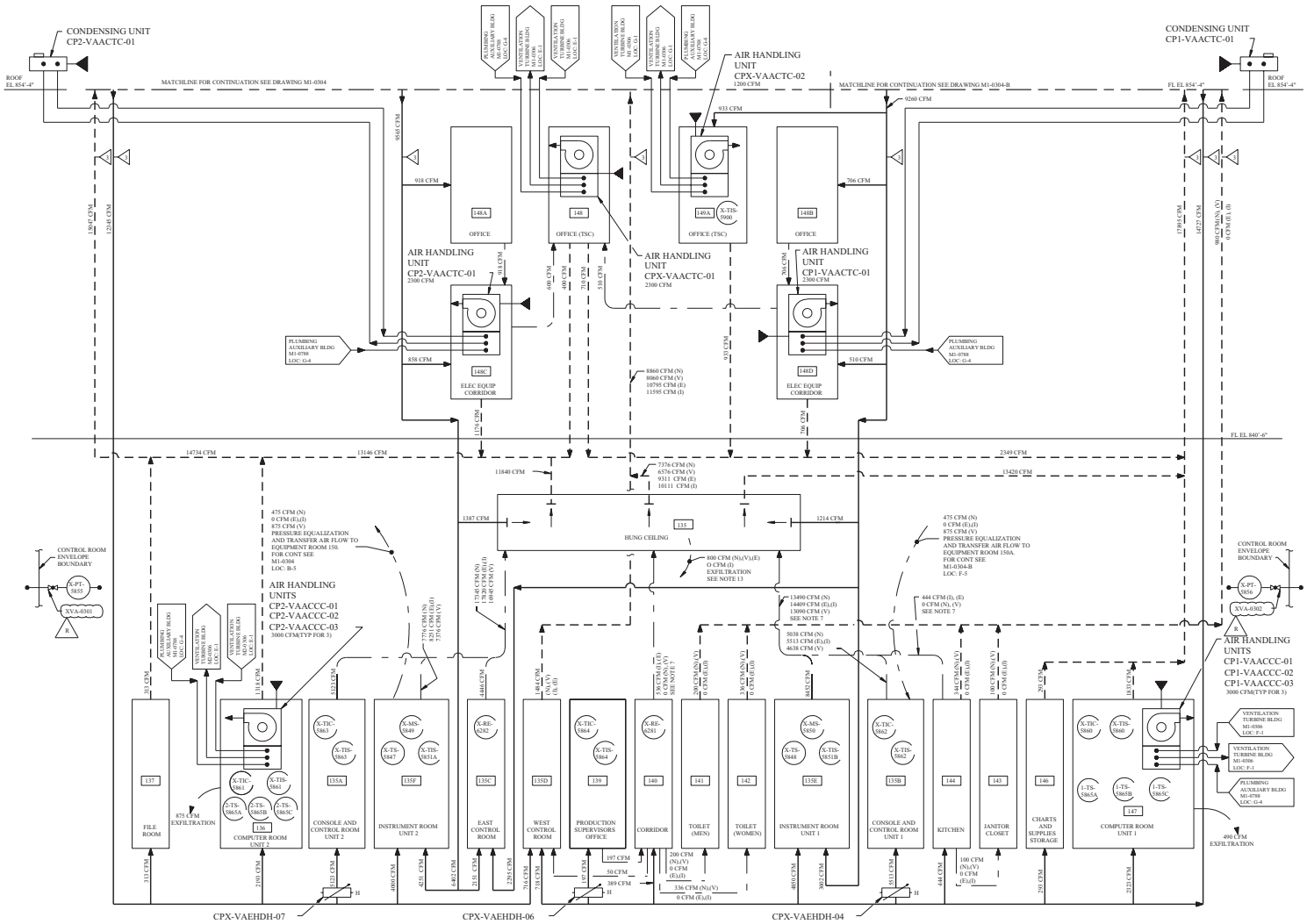

REV.	DWN	CHK	APVD	REMARKS
CP-14	NJL 04-17-2002	DJL 04-17-2002		THIS DRAWING REVISED TO INCORPORATE DESIGN CHANGE EDA-2002-0008 TX-01 ON PER SIC-0001-02-0008 TX-01-00.

NOTES:

1. **THIS DIAGRAM IS A SCHEMATIC REPRESENTATION AND IS INTENDED TO SHOW GENERAL AIR DISTRIBUTION AND FLOW PATHS.** AIR FLOWS MAY VARY SLIGHTLY DEPENDING ON OPERATING AIR CONDITIONERS.
2. BALANCING DAMPERS, REGISTERS, DIFFUSERS, FLEXIBLE CONNECTIONS AND ALL OTHER RELATED ACCESSORIES NOT SHOWN ON THIS DIAGRAM SHALL BE PROVIDED AS INDICATED ON THE HVAC ARRANGEMENT DRAWINGS AND SPECIFICATIONS.
3. FOR ABBREVIATIONS AND SYMBOLS SEE DRAWINGS M1-0313 AND M1-0200.
4. WORK THIS DRAWING WITH M1-0308.
5. THIS FLOW DIAGRAM IS COMMON FOR UNIT 1 AND 2.
6. THE CONTROL ROOM AREA WILL BE MAINTAINED AT A POSITIVE PRESSURE OF 0.125 INCHES WG.
7. THIS EXFILTRATION WILL OCCUR DURING EMERGENCY RECIRCULATION AND ISOLATION MODES WHEN THE KITCHEN AND TOILET EXHAUST FANS ARE NOT OPERATING.
8. CONTROL VALVE HAS AN ASSOCIATED SAFETY CLASS 3 AIR ACCUMULATOR CPX-CIATHV-01
9. CONTROL VALVE HAS AN ASSOCIATED SAFETY CLASS 3 AIR ACCUMULATOR CPX-CIATHV-02
10. FOR DRAIN FLOW ORIFICE NUMBER AND LINE CONTINUATION SEE DRAWING M1-0225-04 LOC: C, D, E AND F-2.
11. FIELD INSTALLED PIPE IN ACCORDANCE WITH MS-44B, LINE CATEGORY 152G AND VENDOR RECOMMENDATIONS. THE SAFETY CLASS 3 PIPING IDENTIFIED ON THE TYPICAL DELUGE AND DRAIN CONNECTION DETAIL (A-6) HAS BEEN FABRICATED AND INSTALLED TO THE REQUIREMENTS OF CLASS 5 PIPING. (REF NCR 88-15777 REV 0).
12. AIR FLOW QUANTITIES SHOWN ARE BASED ON A DENSITY OF 0.075 LB/FT CUBURING AT THE STANDARD CONDITION OF DRY AIR AT 70°F AND 29.92" HG BAROMETRIC PRESSURE. QUANTITIES IN PARENTHESES ARE ACTUAL AIR FLOW RATES BASED ON DENSITY AT DESIGN CONDITIONS.
13. MAXIMUM EXFILTRATION FROM CONTROL ROOM ENVELOPE DURING ALL MODES OF OPERATION EXCEPT ISOLATION MODE.
14. DAMPER MANUALLY POSITIONED FOR FLOW BALANCING PURPOSE.
15. DAMPER FAILS TO A PRESET POSITION DETERMINED BY FLOW BALANCING.
16. THE AMOUNT OF RETURN AIR FLOW WAS CALCULATED BASED ON EXISTING READINGS AS WELL AS NEW READINGS AND FROM TRAVERSE READINGS TAKEN DOWNSTREAM.

REFERENCES:

1.	M1-0313	FLOW DIAGRAM VENTILATION AAP BLDG AND CONTROL BLDG UPS AREA A/C SYSTEMS
2.	M1-0200	MECHANICAL SYMBOLS AND NOTES
3.	M1-0308	FLOW DIAGRAM VENTILATION CONTROL ROOM AIR CONDITIONING
4.	M1-0236-01 AND M1-0236-02	FLOW DIAGRAM VENTS AND DRAINS SYSTEM SAFEGUARDS AND AUXILIARY BUILDINGS
5.	M1-0227	FLOW DIAGRAM POTABLE AND SANITARY WATER SYSTEM
6.	ELD-353-1800	GENERAL ATOMIC COMPANY OUTLINE GAS SAMPLER WITH PUMP
7.	M1-0788	PLUMBING AUXILIARY BUILDING PLANT AT EL 830'-0"
8.	M1-0306	FLOW DIAGRAM VENTILATION TURBINE BUILDING
9.	M2-0306	FLOW DIAGRAM VENTILATION TURBINE BUILDING
10.	M1-0304-A	FLOW DIAGRAM VENTILATION CONTROL ROOM AIR CONDITIONING
11.	M1-0304-B	FLOW DIAGRAM VENTILATION CONTROL ROOM AIR CONDITIONING
12.	M1-0225-04	FLOW DIAGRAM PRIMARY AND SECONDARY PLANT FIRE PROTECTION SYSTEM
13.	M2-0256	FLOW DIAGRAM CHEMICAL AND VOLUME CONTROL SYSTEM
14.	M1-0229	FLOW DIAGRAM COMPONENT COOLING WATER SYSTEM
15.	353-1100	OUTLINE NOBLE GAS MONITOR (SORRENTO ELECTRONICS)

LEGEND:

(N) CFM FOR NORMAL OPERATION MODE

(E) CFM FOR EMERGENCY RECIRCULATION MODE

(V) CFM FOR EMERGENCY VENTILATION MODE

(I) CFM FOR ISOLATION MODE

FSAR FIGURE 9.4-I

THIS DRAWING OBSOLETED ELECTRONICALLY

CLASS I

(NUCLEAR SAFETY-RELATED)

SAFETY CLASS 1 SAFETY CLASS 2 SAFETY CLASS 3 SEISMIC CATEGORY I CLASS 1E ASSOCIATED CIRCUITS

TXU ENERGY
CPSES
GLEN ROSE, TEXAS

FLOW DIAGRAM-VENTILATION
CONTROL ROOM AIR CONDITIONING

DWG. NO.	SH. NO.	REV.
M1-0304	A	CP-14

me430300.dgn A M1-0304-A

SSSSSSSSSSSSSSSS

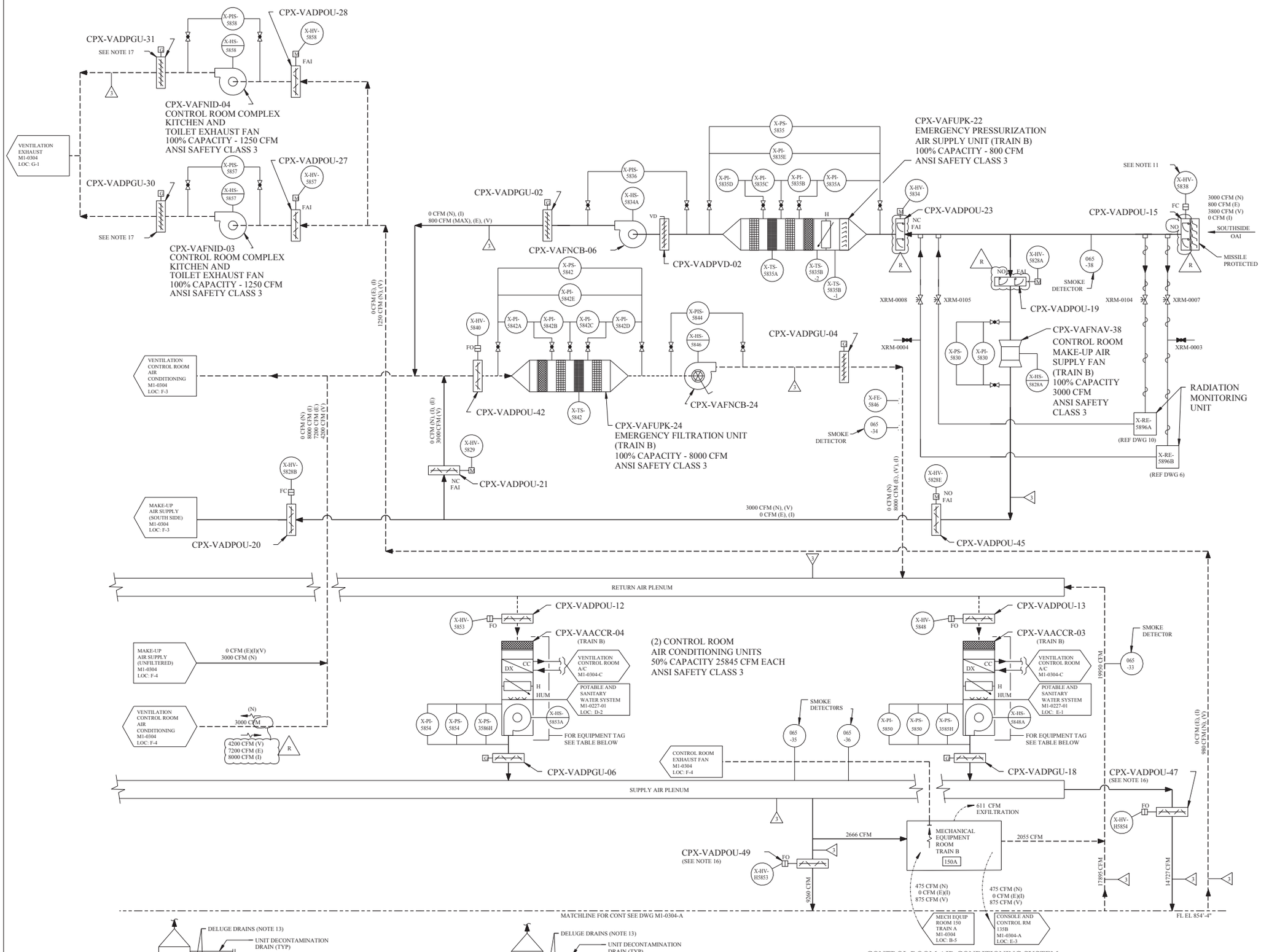

FILTRATION UNIT NUMBER	DELUGE DRAIN VALVES		DELUGE SUPPLY VALVE	DRAIN CONNECTION REFERENCE DWG AND LOCATION
	(A)	(B)	(C)	
CPX-VAFUPK-22	CPX-VADPCK-39	CPX-VADPCK-40	XFP-0655	M1-0236-01A LOC: F-2
CPX-VAFUPK-24	CPX-VADPCK-43	CPX-VADPCK-44	XFP-0657	M1-0236-01A LOC: F-2

AIR CONDITIONING UNIT	PREFILTER	COOLING COIL	ELECTRIC HEATER	CENTRIFUGAL FAN	HUMIDIFIER	CONDENSER	COMPRESSOR
CPX-VAACCR-03	CPX-VAACCR-03A	CPX-VAACCR-03B	CPX-VAACCR-03H	CPX-VAACCR-03D	CPX-VAACCR-03E	CPX-VAACCR-03F	CPX-VAACCR-03G
CPX-VAACCR-04	CPX-VAACCR-04A	CPX-VAACCR-04B	CPX-VAACCR-04H	CPX-VAACCR-04D	CPX-VAACCR-04E	CPX-VAACCR-04F	CPX-VAACCR-04G

REV	DWN	CHK	APVD	REMARKS
CP-19	MM 11-10 2005	DLK 11-10 2005		THIS DRAWING REVISED TO INCORPORATE DESIGN CHANGE FDA 2001-002847-01-03 PER SK-0022-01-002847-01-00.

NOTES:
1. THIS DIAGRAM IS A SCHEMATIC REPRESENTATION AND IS INTENDED TO SHOW GENERAL AIR DISTRIBUTION AND FLOW PATHS. AIR FLOWS MAY VARY SLIGHTLY DEPENDING ON OPERATING AIR CONDITIONERS.
2. BALANCING DAMPERS, REGISTERS, DIFFUSERS, FLEXIBLE CONNECTIONS AND ALL OTHER RELATED ACCESSORIES NOT SHOWN ON THIS DIAGRAM SHALL BE PROVIDED AS INDICATED ON THE HVAC ARRANGEMENT DRAWINGS AND SPECIFICATIONS.
3. FOR ABBREVIATIONS AND SYMBOLS SEE DRAWINGS M1-0313 AND M1-0200.
4. DELETED
5. WORK THIS DRAWING WITH M1-0308.
6. THIS FLOW DIAGRAM IS COMMON FOR UNIT 1 AND 2.
7. THE CONTROL ROOM AREA WILL BE MAINTAINED AT A POSITIVE PRESSURE OF 0.125 INCHES WG.
8. THIS EXFILTRATION WILL OCCUR DURING EMERGENCY RECIRCULATION AND ISOLATION MODES WHEN THE KITCHEN AND TOILET EXHAUST FANS ARE NOT OPERATING.
9. DELETED
10. CONTROL VALVE HAS AN ASSOCIATED SAFETY CLASS 3 AIR ACCUMULATOR CPX-CIATHV-01 .
11. CONTROL VALVE HAS AN ASSOCIATED SAFETY CLASS 3 AIR ACCUMULATOR CPX-CIATHV-02 .
12. FOR DRAIN FLOW ORIFICE NUMBER AND LINE CONTINUATION SEE DRAWING M1-0225-04A LOC: A, B, C & D-2.
13. NOT WITHIN ASME CODE BOUNDARY.
14. AIR FLOW QUANTITIES SHOWN ARE BASED ON A DENSITY OF 0.075 LB/FT3 OCCURRING AT THE STANDARD CONDITION OF DRY AIR AT 70°F AND 29.92" HG BAROMETRIC PRESSURE. QUANTITIES IN PARENTHESES ARE ACTUAL AIR FLOW RATES BASED ON DENSITY AT DESIGN CONDITIONS.
15. MAXIMUM EXFILTRATION FROM CONTROL ROOM ENVELOPE DURING ALL MODES OF OPERATION EXCEPT ISOLATION MODE.
16. DAMPER MANUALLY POSITIONED FOR FLOW BALANCING PURPOSE.
17. DAMPERS CPX-VADPGU-30 AND 31 WEIGHT AND ARM POSITIONS HAVE BEEN REPOSITIONED TO RETAIN .25 INCHES OF WATER PRESSURE PRIOR TO OPENING.
18. THE AMOUNT OF RETURN AIR FLOW WAS CALCULATED BASED ON EXISTING READINGS AS WELL AS NEW READINGS AND FROM TRAVERSE READINGS TAKEN DOWNSTREAM.

REFERENCES:

1.	M1-0313	FLOW DIAGRAM VENTILATION AAP BUILDING AND CONTROL BUILDING UPS AREA A/C SYSTEM.
2.	M1-0200	MECHANICAL SYMBOLS AND NOTES
3.	M1-0308	FLOW DIAGRAM VENTILATION CONTROL ROOM AIR CONDITIONING
4.	M1-0236-01 AND M1-0236-02	FLOW DIAGRAM VENTS AND DRAINS SYSTEM SAFEGUARDS AND AUXILIARY BUILDINGS
5.	M1-0227	FLOW DIAGRAM POTABLE AND SANITARY WATER SYSTEM
6.	ELD-353-1800	GENERAL ATOMIC COMPANY OUTLINE GAS SAMPLER WITH PUMP
7.	M1-0304	FLOW DIAGRAM VENTILATION CONTROL ROOM AIR CONDITIONING
8.	M1-0304-A	FLOW DIAGRAM VENTILATION CONTROL ROOM AIR CONDITIONING
9.	M1-0225-04	FLOW DIAGRAM PRIMARY AND SECONDARY PLANT FIRE PROTECTION SYSTEM.
10.	353-1100	OUTLINE NOBLE GAS MONITOR (SORRENTO ELECTRONICS)

LEGEND:
(N) CFM FOR NORMAL OPERATION MODE
(E) CFM FOR EMERGENCY RECIRCULATION MODE
(V) CFM FOR EMERGENCY VENTILATION MODE
(I) CFM FOR ISOLATION MODE

FSAR FIGURE 9.4-1

THIS DRAWING CREATED ELECTRONICALLY

DRAWING M1-0304 REV CP-13 HAS BEEN SPLIT INTO THE FOLLOWING SHEETS:
M1-0304
M1-0304-B

CLASS I
(NUCLEAR SAFETY-RELATED)
SAFETY CLASS 1 — SEISMIC CATEGORY I
SAFETY CLASS 2 — CLASS 1E
SAFETY CLASS 3 — ASSOCIATED CIRCUITS

LUMINANT
CPSES
GLEN ROSE, TEXAS

FLOW DIAGRAM
VENTILATION CONTROL ROOM
AIR CONDITIONING

DWG. NO. M1-0304 | SH. NO. B | REV. CP-19

me651600.dgn | A M1-0304-B | FINAL PRINT

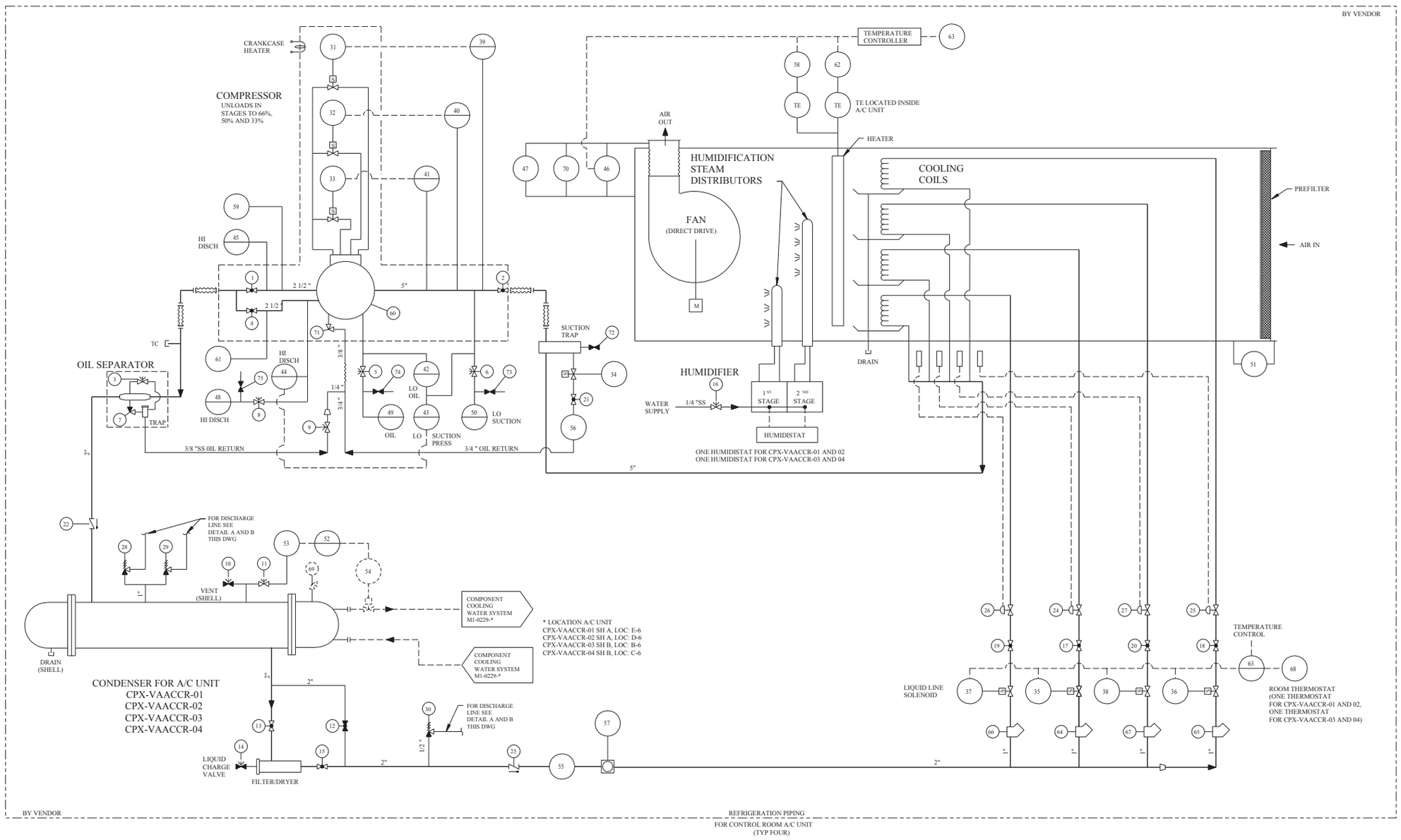

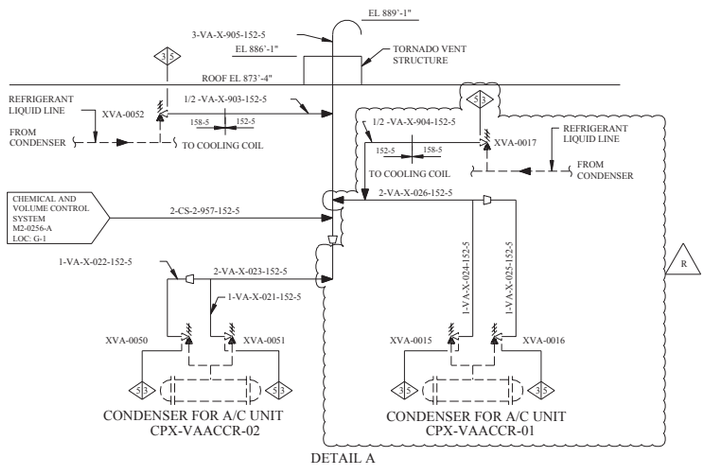

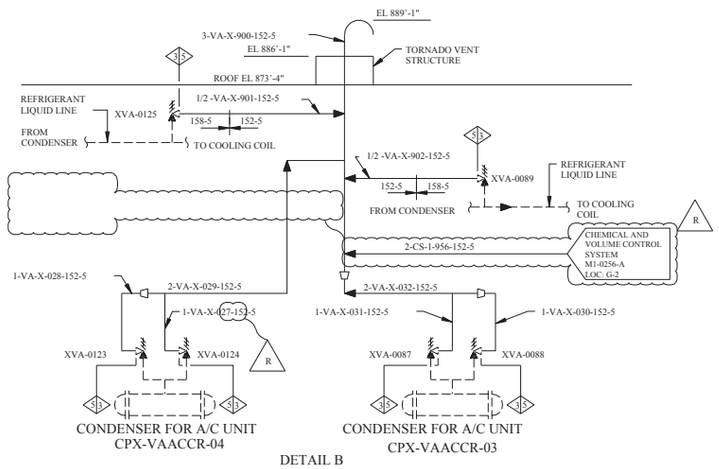

REV	DWN	CHKD	APVD	REMARKS
CP-4	MM 05-22-2008	DLK 05-22-2008		THIS DRAWING REVISED TO INCORPORATE DESIGN CHANGE FDA-2008-001745-01-00 PER SK-0001-08-001745-01-00.

NOTES:

1. THIS DIAGRAM IS A SCHEMATIC REPRESENTATION AND IS INTENDED TO SHOW GENERAL FLOW PATHS.
2. FOR ABBREVIATIONS AND SYMBOLS SEE DRAWINGS M1-0313 AND M1-0200.
3. THIS FLOW DIAGRAM IS COMMON FOR UNIT 1 AND 2.
4. WORK THIS DRAWING WITH M1-0304-D.

REFERENCES:

1.	M1-0313	FLOW DIAGRAM VENTILATION AAP BLDG AND CONTROL BLDG UPS AREA A/C SYSTEMS
	⊠1-0200	MECHANICAL SYMBOLS AND NOTES
3.	M1-0227	FLOW DIAGRAM POTABLE AND SANITARY WATER SYSTEM
4.	M1-0788	PLUMBING AUXILIARY BUILDING PLANT AT EL 830'-0"
5.	M1-0306	FLOW DIAGRAM VENTILATION TURBINE BUILDING
6.	M1-0304	FLOW DIAGRAM VENTILATION CONTROL ROOM AIR CONDITIONING
7.	M1-0304-A	FLOW DIAGRAM VENTILATION CONTROL ROOM AIR CONDITIONING
8.	M1-0304-B	FLOW DIAGRAM VENTILATION CONTROL ROOM AIR CONDITIONING
9.	M1-0229-A	FLOW DIAGRAM COMPONENT COOLING WATER SYSTEM
10.	M1-0229-B	FLOW DIAGRAM COMPONENT COOLING WATER SYSTEM
11.	M2-0256-A	FLOW DIAGRAM CHEMICAL AND VOLUME CONTROL SYSTEM
12.	B-587-0200	CVI P&I DIAGRAM AIR CONDITIONING SYSTEM

FSAR FIGURE 9.4-1

THIS DRAWING CREATED ELECTRONICALLY

DRAWING M1-0304 REV CP-20 HAS BEEN SPLIT INTO THE FOLLOWING SHEETS:
M1-0304
M1-0304-C

CLASS I
(NUCLEAR SAFETY-RELATED)
SAFETY CLASS 1, SAFETY CLASS 2, SAFETY CLASS 3 — SEISMIC CATEGORY I, CLASS 1E, ASSOCIATED CIRCUITS

LUMINANT
CPSES
GLEN ROSE, TEXAS

FLOW DIAGRAM-VENTILATION
CONTROL ROOM AIR CONDITIONING

DWG. NO.	SH. NO.	REV.
M1-0304	C	CP-4

ITEM	DESCRIPTION	CVI TAG NUMBER	CONTROL ROOM A/C UNIT			
			CPX-VAACCR-01	CPX-VAACCR-02	CPX-VAACCR-03	CPX-VAACCR-04
1	CR A/C UNIT REFRIG COMPRESSOR DISCHARGE VALVE	HOV-10	XVA-0026	XVA-0061	XVA-0098	XVA-0134
2	CR A/C UNIT REFRIG COMPRESSOR SUCTION VALVE	HOV-11	XVA-0027	XVA-0062	XVA-0099	XVA-0135
3	CR A/C UNIT REFRIG DISCHARGE LINE OIL SEPARATOR ANGLE STOP VALVE	HOV-12	XVA-0028	XVA-0063	XVA-0100	XVA-0136
4	CR A/C UNIT REFRIG COMPRESSOR DISCHARGE VALVE	HOV-13	XVA-0029	XVA-0064	XVA-0101	XVA-0137
5	CR A/C UNIT REFRIG COMPRESSOR LUBE OIL PRESSURE INDICATOR ROOT VALVE	HOV-14	XVA-0030	XVA-0065	XVA-0102	XVA-0138
6	CR A/C UNIT REFRIG COMPRESSOR LUBE OIL PRESSURE INDICATOR ROOT VALVE	HOV-15	XVA-0031	XVA-0066	XVA-0103	XVA-0139
7	CR A/C UNIT REFRIG COMPRESSOR DISCH LINE OIL SEPARATOR ANGLE STOP VALVE	HOV-16	XVA-0032	XVA-0067	XVA-0104	XVA-0140
8	CR A/C UNIT REFRIG COMPRESSOR LUBE OIL PRESSURE INDICATOR ROOT VALVE	HOV-17	XVA-0033	XVA-0068	XVA-0105	XVA-0141
9	CR A/C UNIT REFRIG COMPRESSOR DISCH OIL SEPARATOR RETURN ISO VALVE	HOV-18	XVA-0034	XVA-0069	XVA-0106	XVA-0142
10	CR A/C UNIT REFRIG CONDENSER SHELL VENT VALVE	HOV-21	XVA-0035	XVA-0070	XVA-0107	XVA-0143
11	CR A/C UNIT REFRIG CONDENSER SHELL PRESS TRANSMITTER ROOT VALVE	HOV-22	XVA-0036	XVA-0071	XVA-0108	XVA-0144
12	CR A/C UNIT REFRIG FILTER/DRYER BYPASS VALVE	HOV-23	XVA-0037	XVA-0072	XVA-0109	XVA-0145
13	CR A/C UNIT REFRIG FILTER/DRYER INLET VALVE	HOV-24	XVA-0038	XVA-0073	XVA-0110	XVA-0146
14	CR A/C UNIT REFRIG FILTER/DRYER LIQUID CHARGING VALVE	HOV-25	XVA-0039	XVA-0074	XVA-0111	XVA-0147
15	CR A/C UNIT REFRIG FILTER/DRYER OUTLET VALVE	HOV-26	XVA-0040	XVA-0075	XVA-0112	XVA-0148
16	CR A/C UNIT HUMIDIFIER WATER SUPPLY ISOLATION VALVE	HOV-30	XVA-0041	XVA-0076	XVA-0113	XVA-0149
17	CR A/C UNIT COOLING COIL REFRIG SUPPLY ISOLATION VALVE	HOV-31	XVA-0042	XVA-0077	XVA-0114	XVA-0150
18	CR A/C UNIT COOLING COIL REFRIG SUPPLY ISOLATION VALVE	HOV-32	XVA-0043	XVA-0078	XVA-0115	XVA-0151
19	CR A/C UNIT COOLING COIL REFRIG SUPPLY ISOLATION VALVE	HOV-33	XVA-0044	XVA-0079	XVA-0116	XVA-0152
20	CR A/C UNIT COOLING COIL REFRIG SUPPLY ISOLATION VALVE	HOV-34	XVA-0045	XVA-0080	XVA-0117	XVA-0153
21	CR A/C UNIT REFRIG COMPRESSOR SUCTION TRAP OIL RETURN THROTTLE VALVE	HCV-8	XVA-0046	XVA-0081	XVA-0118	XVA-0154
22	CR A/C UNIT REFRIG COMPRESSOR DISCHARGE CHECK VALVE	CKV-92	XVA-0158	XVA-0160	XVA-0162	XVA-0164
23	CR A/C UNIT COOLING COIL REFRIG SUPPLY LINE CHECK VALVE	CKV-61	XVA-0159	XVA-0161	XVA-0163	XVA-0165
24	CR A/C UNIT COOLING COIL REFRIG THERMAL EXPANSION VALVE	TCV-75	XVA-0166	XVA-0170	XVA-0174	XVA-0178
25	CR A/C UNIT COOLING COIL REFRIG THERMAL EXPANSION VALVE	TCV-76	XVA-0167	XVA-0171	XVA-0175	XVA-0179
26	CR A/C UNIT COOLING COIL REFRIG THERMAL EXPANSION VALVE	TCV-77	XVA-0168	XVA-0172	XVA-0176	XVA-0180
27	CR A/C UNIT COOLING COIL REFRIG THERMAL EXPANSION VALVE	TCV-78	XVA-0169	XVA-0173	XVA-0177	XVA-0181
28	CR A/C UNIT REFRIG CONDENSER SHELL SIDE RELIEF VALVE	PSV-54	XVA-0015	XVA-0050	XVA-0087	XVA-0123
29	CR A/C UNIT REFRIG CONDENSER SHELL SIDE RELIEF VALVE	PSV-55	XVA-0016	XVA-0051	XVA-0088	XVA-0124
30	CR A/C UNIT LIQUID LINE RELIEF VALVE	PSV-56	XVA-0017	XVA-0052	XVA-0089	XVA-0125
31	CR A/C UNIT REFRIG COMPRESSOR 1 ST STAGE PRESSURE CONTROL UNLOADING	SOV-1	X-SV-3583C	X-SV-3584C	X-SV-3585C	X-SV-3586C
32	CR A/C UNIT REFRIG COMPRESSOR 2 ND STAGE PRESSURE CONTROL UNLOADING	SOV-2	X-SV-3583D	X-SV-3584D	X-SV-3585D	X-SV-3586D
33	CR A/C UNIT REFRIG COMPRESSOR 3 RD STAGE PRESSURE CONTROL UNLOADING	SOV-3	X-SV-3583E	X-SV-3584E	X-SV-3585E	X-SV-3586E
34	CR A/C UNIT REFRIG COMPRESSOR SUCTION TRAP OIL RETURN SOLENOID VALVE	SOV-4	X-SV-3587	X-SV-3588	X-SV-3589	X-SV-3590
35	CR A/C UNIT LIQUID LINE SOLENOID VALVE	SOV-70	X-SV-3583-1A	X-SV-3583-2A	X-SV-3585-1A	X-SV-3585-2A
36	CR A/C UNIT LIQUID LINE SOLENOID VALVE	SOV-71	X-SV-3583-1B	X-SV-3583-2B	X-SV-3585-1B	X-SV-3585-2B
37	CR A/C UNIT LIQUID LINE SOLENOID VALVE	SOV-72	X-SV-3583-1C	X-SV-3583-2C	X-SV-3585-1C	X-SV-3585-2C
38	CR A/C UNIT LIQUID LINE SOLENOID VALVE	SOV-73	X-SV-3583-1D	X-SV-3583-2D	X-SV-3585-1D	X-SV-3585-2D
39	CR A/C UNIT REFRIG COMPRESSOR 1 ST STAGE UNLOADING PRESSURE SWITCH	PSS-35	X-PS-3583C	X-PS-3584C	X-PS-3585C	X-PS-3586C
40	CR A/C UNIT REFRIG COMPRESSOR 2 ND STAGE UNLOADING PRESSURE SWITCH	PSS-36	X-PS-3583D	X-PS-3584D	X-PS-3585D	X-PS-3586D
41	CR A/C UNIT REFRIG COMPRESSOR 3 RD STAGE UNLOADING PRESSURE SWITCH	PSS-37	X-PS-3583E	X-PS-3584E	X-PS-3585E	X-PS-3586E
42	CR A/C UNIT REFRIG COMPRESSOR OIL PRESSURE SWITCH	PSS-49	X-PS-3583B	X-PS-3584B	X-PS-3585B	X-PS-3586B
43	CR A/C UNIT REFRIG COMPRESSOR SUCTION PRESSURE SWITCH	PSS-50	X-PS-3583A	X-PS-3584A	X-PS-3585A	X-PS-3586A
44	CR A/C UNIT REFRIG COMPRESSOR DISCHARGE PRESSURE SWITCH	PSS-51	X-PS-3583F	X-PS-3584F	X-PS-3585F	X-PS-3586F
45	CR A/C UNIT REFRIG COMPRESSOR DISCHARGE PRESSURE SWITCH	PSS-52	X-PS-3583G	X-PS-3584G	X-PS-3585G	X-PS-3586G
46	CR A/C UNIT FAN DIFFERENTIAL PRESSURE SWITCH	DPS-81	X-PS-3583H	X-PS-3584H	X-PS-3585H	X-PS-3586H
47	CR A/C UNIT FAN DIFFERENTIAL PRESSURE INDICATOR	DPI-83	X-PI-5849	X-PI-5852	X-PI-5850	X-PI-5854
48	CR A/C UNIT REFRIG COMPRESSOR DISCHARGE PRESSURE INDICATOR	PI-45	X-PI-3583A	X-PI-3584A	X-PI-3585A	X-PI-3586A
49	CR A/C UNIT REFRIG COMPRESSOR LUBE OIL PRESSURE INDICATOR	PI-46	X-PI-3583B	X-PI-3584B	X-PI-3585B	X-PI-3586B
50	CR A/C UNIT REFRIG COMPRESSOR SUCTION PRESSURE INDICATOR	PI-47	X-PI-3583C	X-PI-3584C	X-PI-3585C	X-PI-3586C
51	CR A/C UNIT PREFILTER DIFFERENTIAL PRESSURE INDICATOR	DPI-80	X-PI-3583D	X-PI-3584D	X-PI-3585D	X-PI-3586D
52	CR A/C UNIT REFRIG CONDENSER SHELL SIDE PRESSURE INDICATOR CONTROL	PIC-58	X-PIC-3583	X-PIC-3584	X-PIC-3585	X-PIC-3586
53	CR A/C UNIT REFRIG CONDENSER SHELL SIDE PRESSURE TRANSMITTER	PT-58	X-PT-3583	X-PT-3584	X-PT-3585	X-PT-3586
54	CR A/C UNIT CCW RETURN PRESSURE CONTROL VALVE	PCV-58	X-PV-3583 (REF M1-0229-A)	X-PV-3584 (REF M1-0229-A)	X-PV-3585 (REF M1-0229-B)	X-PV-3586 (REF M1-0229-B)
55	CR A/C UNIT REFRIG LIQUID LINE SIGHT GLASS	FI-63	X-FI-3583A	X-FI-3584A	X-FI-3585A	X-FI-3586A
56	CR A/C UNIT REFRIG COMPRESSOR SUCTION OIL RETURN SIGHT GLASS	FI-64	X-FI-3583B	X-FI-3584B	X-FI-3585B	X-FI-3586B
57	CR A/C UNIT REFRIG LIQUID LINE MOISTURE INDICATOR	MI-62	X-MI-3583A	X-MI-3584A	X-MI-3585A	X-MI-3586A
58	CR A/C UNIT AUTOMATIC RESET HEATER TEMPERATURE SWITCH	TSS-39	X-TS-3583D	X-TS-3584D	X-TS-3585D	X-TS-3586D
59	CR A/C UNIT REFRIG COMPRESSOR DISCHARGE TEMPERATURE SWITCH	TSS-40	X-TS-3583A	X-TS-3584A	X-TS-3585A	X-TS-3586A
60	CR A/C UNIT REFRIG COMPRESSOR OIL TEMPERATURE SWITCH	TSS-41	X-TS-3583B	X-TS-3584B	X-TS-3585B	X-TS-3586B
61	CR A/C UNIT REFRIG COMPRESSOR DISCHARGE TEMPERATURE SWITCH	TSS-42	X-TS-3583C	X-TS-3584C	X-TS-3585C	X-TS-3586C
62	CR A/C UNIT MANUAL RESET HEATER TEMPERATURE SWITCH	TSS-43	X-TS-3583E	X-TS-3584E	X-TS-3585E	X-TS-3586E
63	CR A/C UNIT CPX-VAACCR-01/02 CPX-VAACCR-03/04 TEMP CONTROLLER	TC-90	X-TC-3583		X-TC-3585	
64	CR A/C UNIT REFRIG COOLING COIL SUPPLY LINE STRAINER	STR-65	CPX-VASRCR-01	CPX-VASRCR-05	CPX-VASRCR-09	CPX-VASRCR-13
65	CR A/C UNIT REFRIG COOLING COIL SUPPLY LINE STRAINER	STR-66	CPX-VASRCR-02	CPX-VASRCR-06	CPX-VASRCR-10	CPX-VASRCR-14
66	CR A/C UNIT REFRIG COOLING COIL SUPPLY LINE STRAINER	STR-67	CPX-VASRCR-03	CPX-VASRCR-07	CPX-VASRCR-11	CPX-VASRCR-15
67	CR A/C UNIT REFRIG COOLING COIL SUPPLY LINE STRAINER	STR-68	CPX-VASRCR-04	CPX-VASRCR-08	CPX-VASRCR-12	CPX-VASRCR-16
68	CONTROL ROOM THERMOSTAT	TE-87	X-TS-5847		X-TS-5848	
69	CR A/C UNIT CONDENSER TUBE SIDE RELIEF VALVE	PSV-53	1CC-1025 (REF M1-0229-A)	1CC-1024 (REF M1-0229-A)	1CC-1026 (REF M1-0229-B)	1CC-1027 (REF M1-0229-B)
70	CR A/C UNIT FAN DIFFERENTIAL PRESSURE SWITCH	DPS-82	X-PS-5849	X-PS-5852	X-PS-5850	X-PS-5854
71	CR A/C UNIT REFRIG COMPRESSOR OIL RETURN ANGLE STOP VALVE	-	XVA-0255	XVA-0256	XVA-0257	XVA-0258
72	CR A/C UNIT REFRIG SUCTION TRAP STOP VALVE	-	XVA-0259	XVA-0260	XVA-0261	XVA-0262
73	CR A/C UNIT SUCTION PRESSURE ACCESS VALVE	-	XVA-0263	XVA-0264	XVA-0265	XVA-0266
74	CR A/C UNIT OIL PRESSURE ACCESS VALVE	-	XVA-0267	XVA-0268	XVA-0269	XVA-0270
75	CR A/C UNIT DISCHARGE PRESSURE ACCESS VALVE	-	XVA-0271	XVA-0272	XVA-0273	XVA-0274

R

REV	DWN	CHKD	APVD	REMARKS
CP-4	TES 09-08-2005	GAW 09-08-2005		THIS DRAWING REVISED TO INCORPORATE DESIGN CHANGE FDA-2003-002013-01-00 PER SK-0004-03-002013-01-00.

NOTES:

1. THIS DIAGRAM IS A SCHEMATIC REPRESENTATION AND IS INTENDED TO SHOW GENERAL FLOW PATHS.
2. FOR ABBREVIATIONS AND SYMBOLS SEE DRAWINGS M1-0313 AND M1-0200.
3. THIS FLOW DIAGRAM IS COMMON FOR UNIT 1 AND 2.
4. WORK THIS DRAWING WITH M1-0304-C.

REFERENCES:

1.	M1-0313	FLOW DIAGRAM VENTILATION AAP BLDG AND CONTROL BLDG UPS AREA A/C SYSTEMS
2.	M1-0200	MECHANICAL SYMBOLS AND NOTES
3.	M1-0304	FLOW DIAGRAM VENTILATION CONTROL ROOM AIR CONDITIONING
4.	M1-0304-A	FLOW DIAGRAM VENTILATION CONTROL ROOM AIR CONDITIONING
5.	M1-0304-B	FLOW DIAGRAM VENTILATION CONTROL ROOM AIR CONDITIONING
6.	M1-0229-A	FLOW DIAGRAM COMPONENT COOLING WATER SYSTEM
7.	M1-0229-B	FLOW DIAGRAM COMPONENT COOLING WATER SYSTEM
8.	B-587-0200	CVI P&I DIAGRAM AIR CONDITIONING SYSTEM

FSAR FIGURE 9.4-1

THIS DRAWING CREATED ELECTRONICALLY

DRAWING M1-0304 REV CP-20
HAS BEEN SPLIT INTO THE FOLLOWING SHEETS:
M1-0304
M1-0304-D

CLASS I
(NUCLEAR SAFETY-RELATED)
SAFETY CLASS 1 SEISMIC CATEGORY I
SAFETY CLASS 2 CLASS 1E
SAFETY CLASS 3 ASSOCIATED CIRCUITS

LUMINANT
CPSES
GLEN ROSE, TEXAS

FLOW DIAGRAM-VENTILATION
CONTROL ROOM AIR CONDITIONING

DWG NO. M1-0304 | SH. NO. D | REV. CP-4

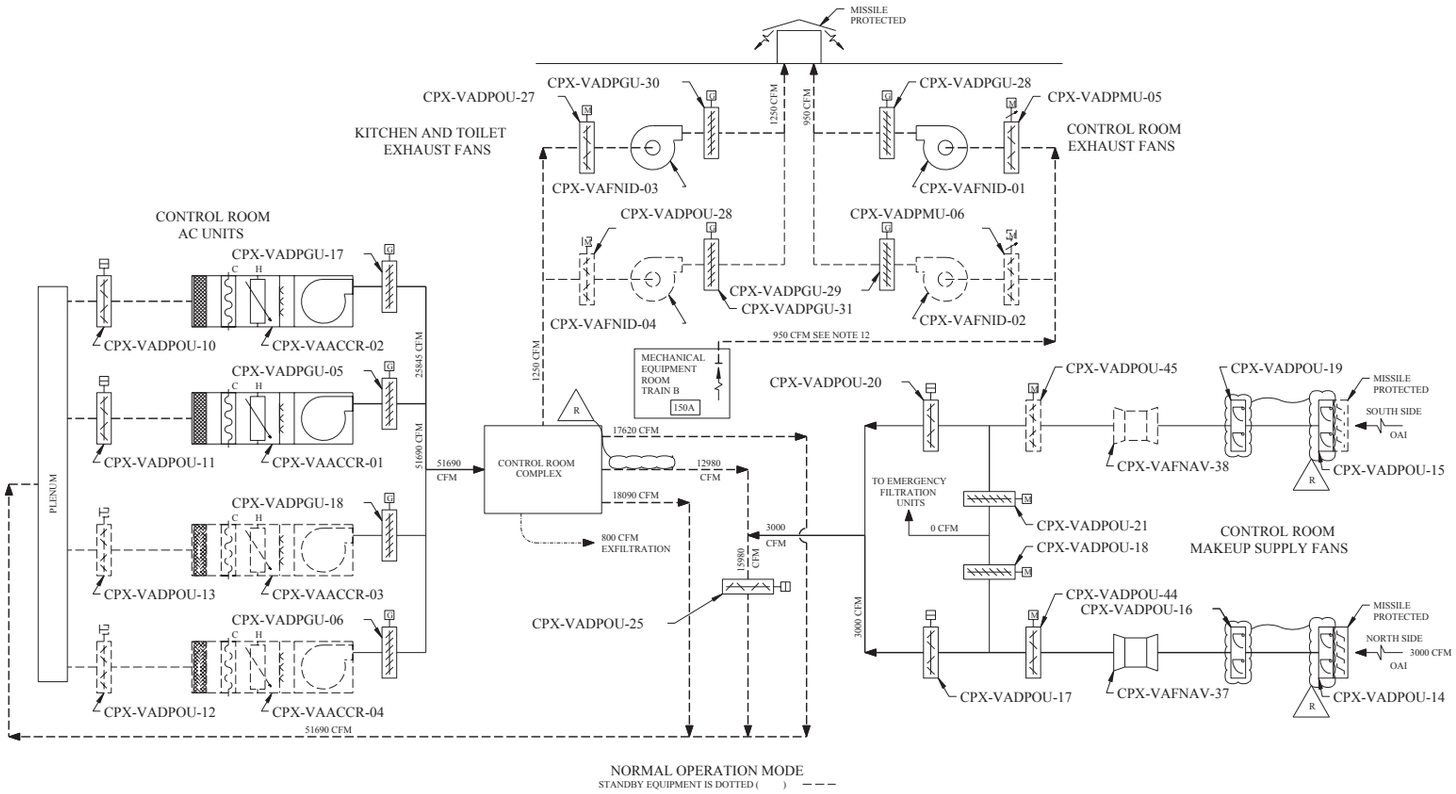

NORMAL OPERATION MODE
STANDBY EQUIPMENT IS DOTTED ( ) - - -

NORMAL OPERATION SEE NOTE 10			
DAMPERS OPEN	FANS ON	DAMPERS CLOSED	FANS OFF
CPX-VADPOU-11	CPX-VAACCR-01	CPX-VADPOU-13	CPX-VAACCR-03
CPX-VADPGU-05		CPX-VADPGU-18	
CPX-VADPOU-10	CPX-VAACCR-02	CPX-VADPOU-12	CPX-VAACCR-04
CPX-VADPGU-17		CPX-VADPGU-06	
CPX-VADPOU-25			
CPX-VADPOU-15			
CPX-VADPOU-14			
CPX-VADPOU-16	CPX-VAFNAV-37	CPX-VADPOU-19	CPX-VAFNAV-38
CPX-VADPOU-17		CPX-VADPOU-20	
CPX-VADPOU-44		CPX-VADPOU-18	
CPX-VADPOU-45		CPX-VADPOU-21	
CPX-VADPMU-05	CPX-VAFNID-01	CPX-VADPMU-06	CPX-VAFNID-02
CPX-VADPGU-28		CPX-VADPGU-29	
CPX-VADPOU-27	CPX-VAFNID-03	CPX-VADPOU-28	CPX-VAFNID-04
CPX-VADPGU-30		CPX-VADPGU-31	
		CPX-VADPOU-22	CPX-VAFNCB-05
		CPX-VADPGU-01	
		CPX-VADPOU-23	CPX-VAFNCB-06
		CPX-VADPGU-02	
		CPX-VADPOU-41	CPX-VAFNCB-23
		CPX-VADPGU-03	
		CPX-VADPOU-42	CPX-VAFNCB-24
		CPX-VADPGU-04	

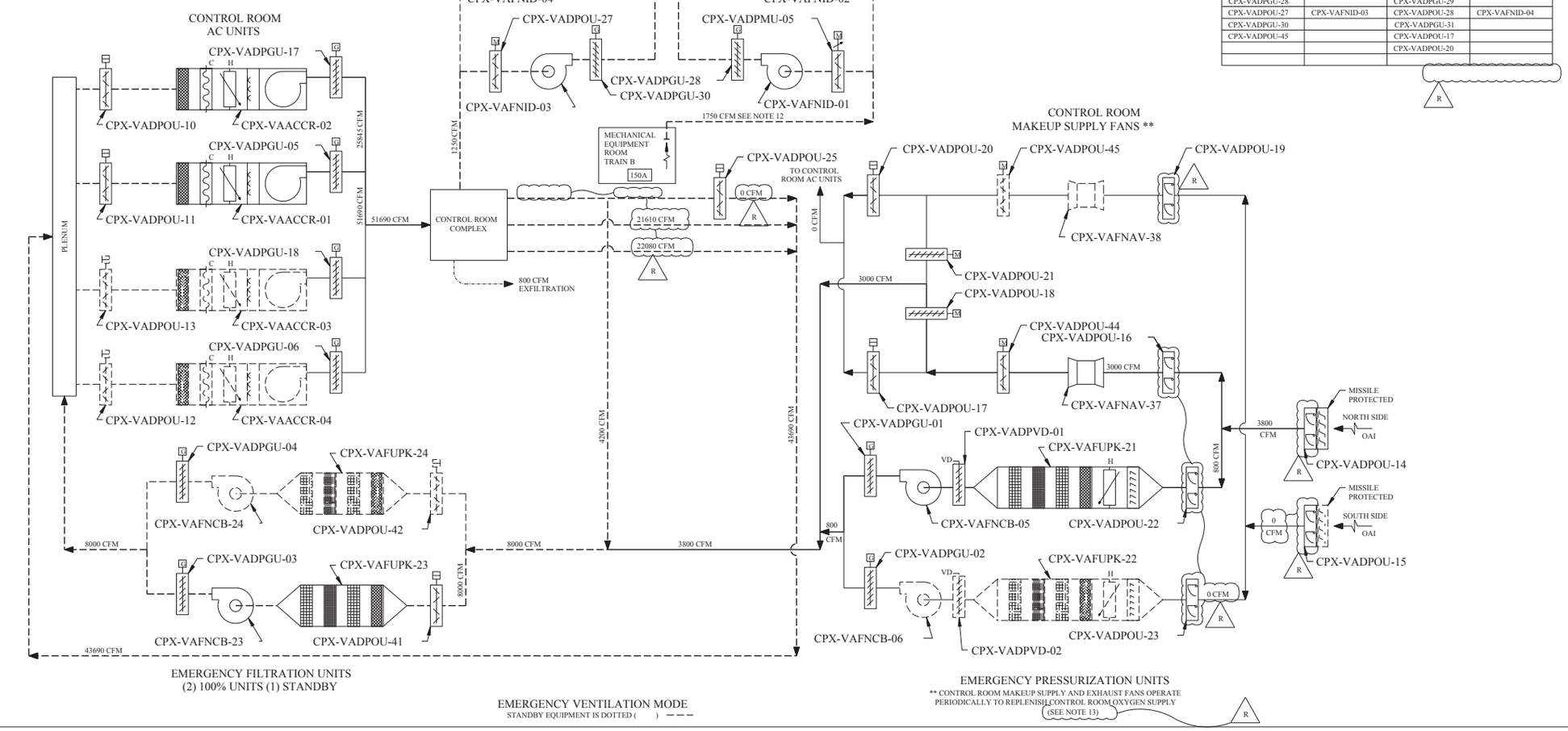

EMERGENCY FILTRATION UNITS
(2) 100% UNITS (1) STANDBY

EMERGENCY VENTILATION MODE
STANDBY EQUIPMENT IS DOTTED ( ) - - -

EMERGENCY VENTILATION MODE SEE NOTE 10			
DAMPERS OPEN	FANS ON	DAMPERS CLOSED	FANS OFF
CPX-VADPOU-11	CPX-VAACCR-01	CPX-VADPOU-13	CPX-VAACCR-03
CPX-VADPGU-05		CPX-VADPGU-18	
CPX-VADPOU-10	CPX-VAACCR-02	CPX-VADPOU-12	CPX-VAACCR-04
CPX-VADPGU-17		CPX-VADPGU-06	
		CPX-VADPOU-25	
CPX-VADPOU-41	CPX-VAFNCB-23	CPX-VADPOU-42	CPX-VAFNCB-24
CPX-VADPGU-03		CPX-VADPGU-04	
		CPX-VADPOU-15	
CPX-VADPOU-14			
CPX-VADPOU-22	CPX-VAFNCB-05	CPX-VADPOU-23	CPX-VAFNCB-06
CPX-VADPGU-01		CPX-VADPGU-02	
CPX-VADPOU-16	CPX-VAFNAV-37	CPX-VADPOU-19	CPX-VAFNAV-38
CPX-VADPOU-18		CPX-VADPOU-21	
CPX-VADPOU-44			
CPX-VADPMU-05	CPX-VAFNID-01	CPX-VADPMU-06	CPX-VAFNID-02
CPX-VADPGU-28		CPX-VADPGU-29	
CPX-VADPOU-27	CPX-VAFNID-03	CPX-VADPOU-28	CPX-VAFNID-04
CPX-VADPGU-30		CPX-VADPGU-31	
CPX-VADPOU-45		CPX-VADPOU-17	
		CPX-VADPOU-20	

EMERGENCY PRESSURIZATION UNITS
** CONTROL ROOM MAKEUP SUPPLY AND EXHAUST FANS OPERATE PERIODICALLY TO REPLENISH CONTROL ROOM OXYGEN SUPPLY (SEE NOTE 13)

REV	DWN	CHK	APVD	REMARKS
CP-12	DLK 11-16-2005	MM 11-16-2005		THIS DRAWING REVISED TO INCORPORATE DESIGN CHANGE FDA 2001-0028447-01-04 PER SK-0056-01-0028447-01-01.

NOTES:

1. FOR ABBREVIATIONS AND SYMBOLS SEE DRAWINGS M1-0313 AND M1-0200.
2. DELETED
3. THIS DIAGRAM IS A SCHEMATIC REPRESENTATION AND IS INTENDED TO SHOW GENERAL AIR DISTRIBUTION AND FLOW PATHS.
4. BALANCING DAMPERS, REGISTERS, DIFFUSERS, FLEXIBLE CONNECTIONS AND ALL OTHER RELATED ACCESSORIES NOT SHOWN ON THIS DIAGRAM SHALL BE PROVIDED AS INDICATED ON THE HVAC ARRANGEMENT DRAWINGS AND SPECIFICATIONS.
5. WORK THIS DRAWING WITH M1-0304, M1-0304-A AND M1-0304-B.
6. THIS FLOW DIAGRAM IS COMMON FOR UNITS 1 AND 2.
7. DURING OXYGEN REPLENISHMENT THE EMERGENCY RECIRCULATION MODE IS REPLACED BY THE EMERGENCY VENTILATION MODE FOR SHORT INTERVALS.
8. DELETED
9. DELETED
10. DAMPERS CPX-VADPMU-05 AND -06 ARE MODULATING CONTROL DAMPERS.
11. FOR DAMPER AND FAN MODE OF OPERATIONS SEE TABLES.
12. VALUES SHOWN ARE MINIMUM AIR FLOWS. ACTUAL AIR FLOW DEPENDS ON THE LEAK TIGHTNESS OF THE CONTROL ROOM PRESSURE BOUNDARY.
13. DAMPER CPX-VADPOU-14 OR -15 IS CLOSED BY THE OPERATOR WHEN SHUTTING DOWN THE ASSOCIATED TRAIN OF CRAC VENTILATION SYSTEM AFTER AN SI, BLACKOUT OR HIGH RADIATION SIGNAL.

R

REFERENCES:

1.	M1-0313	FLOW DIAGRAM - VENTILATION AAP BLDG AND CONTROL BLDG UPS AREA A/C SYSTEMS
2.	M1-0200	MECHANICAL SYMBOLS AND NOTES
3.	M1-0304 M1-0304-A M1-0304-B	FLOW DIAGRAM - VENTILATION CONTROL ROOM AIR CONDITIONING

FSAR FIGURE 9.4-1

THIS DRAWING CREATED ELECTRONICALLY

DRAWING M1-0308 REV CP-4 HAS BEEN SPLIT INTO THE FOLLOWING SHEETS:
M1-0308
M1-0308-A

CLASS I
(NUCLEAR SAFETY-RELATED)
SAFETY CLASS 1 SEISMIC CATEGORY I
SAFETY CLASS 2 CLASS 1E
SAFETY CLASS 3 ASSOCIATED CIRCUITS

LUMINANT
CPSES
GLEN ROSE, TEXAS

FLOW DIAGRAM - VENTILATION
CONTROL ROOM AIR CONDITIONING

DWG. NO.	SH. NO.	REV.
M1-0308	-	CP-12

CONTROL ROOM
AC UNITS

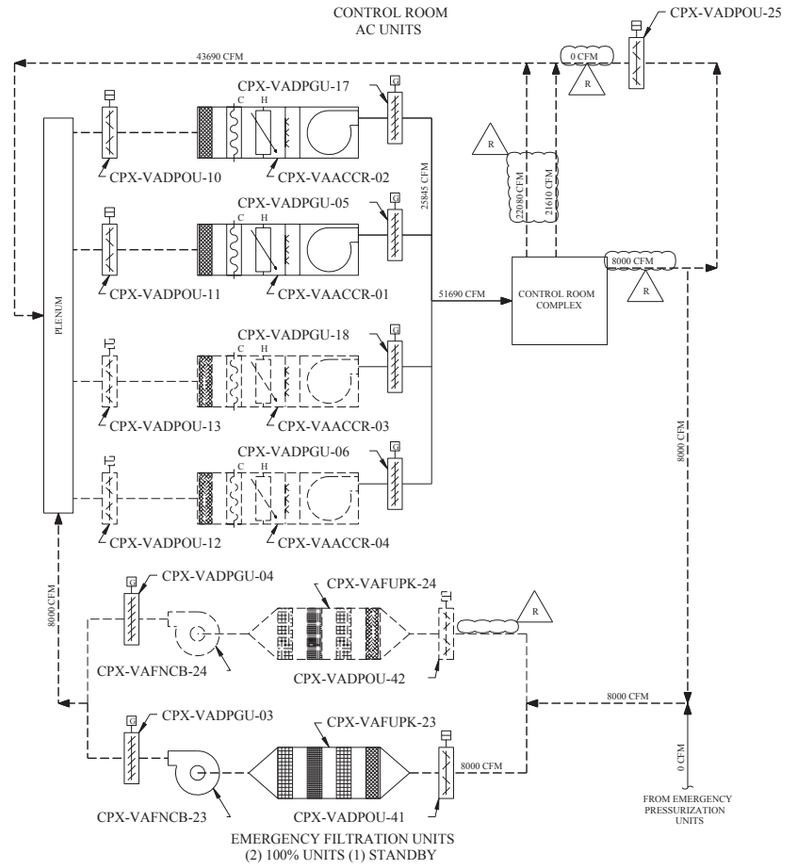

EMERGENCY FILTRATION UNITS
(2) 100% UNITS (1) STANDBY

ISOLATION MODE
STANDBY EQUIPMENT IS DOTTED ( ) - - -

TRAIN A EQUIPMENT LINE-UP FOR CONTROL ROOM
AIR CONDITIONING SYSTEM

ISOLATION MODE SEE NOTE 9			
DAMPERS OPEN	FANS ON	DAMPERS CLOSED	FANS OFF
CPX-VADPOU-11	CPX-VAACCR-01	CPX-VADPOU-13	CPX-VAACCR-03
CPX-VADPGU-05		CPX-VADPGU-18	
CPX-VADPOU-10	CPX-VAACCR-02	CPX-VADPOU-12	CPX-VAACCR-04
CPX-VADPGU-17		CPX-VADPGU-06	
		CPX-VADPOU-25	
CPX-VADPOU-41	CPX-VAFNCB-23	CPX-VADPOU-42	CPX-VAFNCB-24
CPX-VADPGU-03		CPX-VADPGU-04	
		CPX-VADPOU-14	
		CPX-VADPOU-22	CPX-VAFNCB-05
		CPX-VADPOU-01	
		CPX-VADPOU-23	CPX-VAFNCB-06
		CPX-VADPOU-02	
CPX-VADPOU-44		CPX-VADPOU-15	CPX-VAFNAV-37
		CPX-VADPOU-17	
		CPX-VADPOU-18	
CPX-VADPOU-45		CPX-VADPOU-19	CPX-VAFNAV-38
		CPX-VADPOU-20	
		CPX-VADPOU-21	
		CPX-VADPMU-05	CPX-VAFNID-01
		CPX-VADPGU-28	
		CPX-VADPMU-06	CPX-VAFNID-02
		CPX-VADPGU-29	
		CPX-VADPOU-27	CPX-VAFNID-03
		CPX-VADPGU-30	
		CPX-VADPOU-28	CPX-VAFNID-04
		CPX-VADPGU-31	

R

EMERGENCY RECIRCULATION MODE SEE NOTE 7			
DAMPERS OPEN	FANS ON	DAMPERS CLOSED	FANS OFF
CPX-VADPOU-11	CPX-VAACCR-01	CPX-VADPOU-13	CPX-VAACCR-03
CPX-VADPGU-05		CPX-VADPGU-18	
CPX-VADPOU-10	CPX-VAACCR-02	CPX-VADPOU-12	CPX-VAACCR-04
CPX-VADPGU-17		CPX-VADPGU-06	
		CPX-VADPOU-25	
CPX-VADPOU-41	CPX-VAFNCB-23	CPX-VADPOU-42	CPX-VAFNCB-24
CPX-VADPGU-03		CPX-VADPGU-04	
		CPX-VADPOU-15	
CPX-VADPOU-14			
CPX-VADPOU-22	CPX-VAFNCB-05	CPX-VADPOU-23	CPX-VAFNCB-06
CPX-VADPGU-01		CPX-VADPGU-02	
CPX-VADPOU-44		CPX-VADPOU-16	CPX-VAFNAV-37
		CPX-VADPOU-17	
		CPX-VADPOU-18	
CPX-VADPOU-45		CPX-VADPOU-19	CPX-VAFNAV-38
		CPX-VADPOU-20	
		CPX-VADPOU-21	
		CPX-VADPMU-05	CPX-VAFNID-01
		CPX-VADPGU-28	
		CPX-VADPMU-06	CPX-VAFNID-02
		CPX-VADPGU-29	
		CPX-VADPOU-27	CPX-VAFNID-03
		CPX-VADPGU-30	
		CPX-VADPOU-28	CPX-VAFNID-04
		CPX-VADPGU-31	

R

CONTROL ROOM
AC UNITS

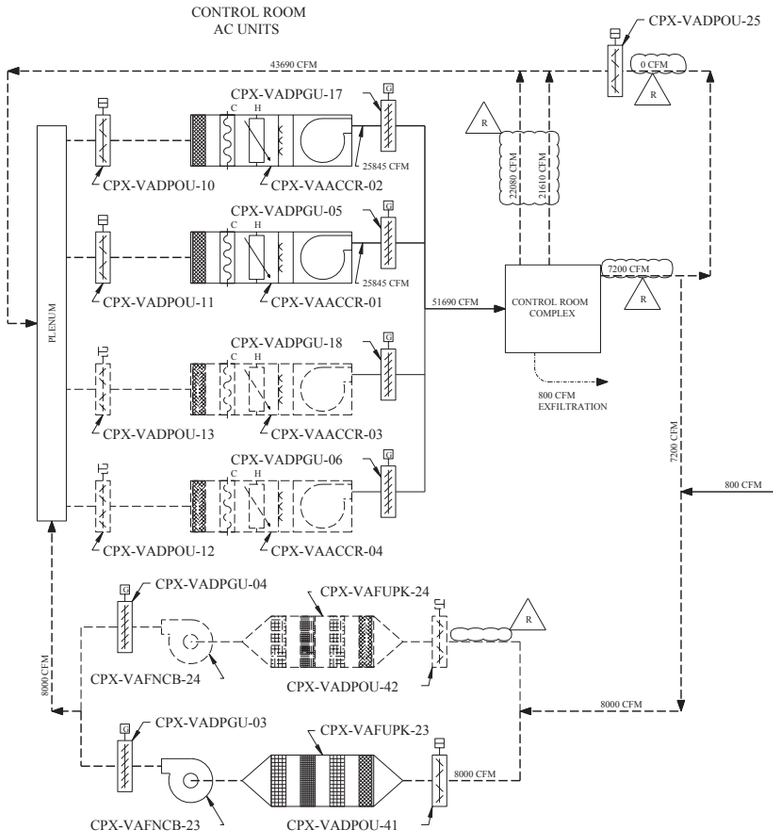

EMERGENCY FILTRATION UNITS
(2) 100% UNITS (1) STANDBY

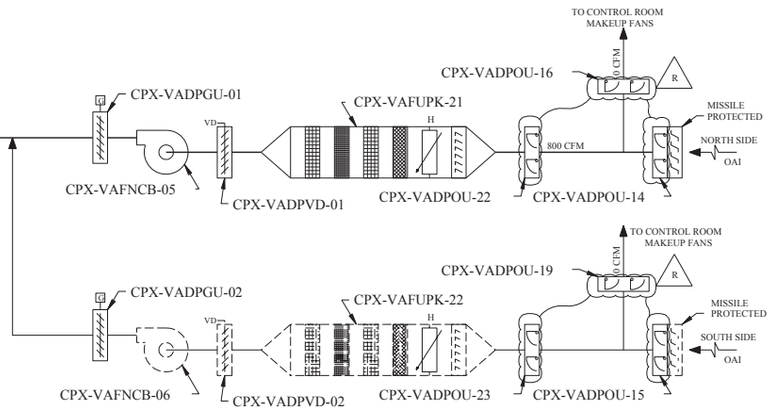

EMERGENCY PRESSURIZATION UNITS
800 CFM (2) 100% UNITS (1) STANDBY

EMERGENCY RECIRCULATION MODE
STANDBY EQUIPMENT IS DOTTED ( ) - - -
(SEE NOTE 12) R

REV	DWN	CHK	APVD	REMARKS
CP-5	DLK 11-16-2005	MM 11-16-2005		THIS DRAWING REVISED TO INCORPORATE DESIGN CHANGE FDA 2001-002847-01-04 PER SK-0057-01-002847-01-01.

NOTES:

1. FOR ABBREVIATIONS AND SYMBOLS SEE DRAWINGS M1-0313 AND M1-0200.
2. DELETED
3. THIS DIAGRAM IS A SCHEMATIC REPRESENTATION AND IS INTENDED TO SHOW GENERAL AIR DISTRIBUTION AND FLOW PATHS.
4. BALANCING DAMPERS, REGISTERS, DIFFUSERS, FLEXIBLE CONNECTIONS AND ALL OTHER RELATED ACCESSORIES NOT SHOWN ON THIS DIAGRAM SHALL BE PROVIDED AS INDICATED ON THE HVAC ARRANGEMENT DRAWINGS AND SPECIFICATIONS.
5. WORK THIS DRAWING WITH M1-0304, M1-0304-A AND M1-0304-B.
6. THIS FLOW DIAGRAM IS COMMON FOR UNITS 1 AND 2.
7. DURING OXYGEN REPLENISHMENT THE EMERGENCY RECIRCULATION MODE IS REPLACED BY THE EMERGENCY VENTILATION MODE FOR SHORT INTERVALS.
8. DELETED
9. ISOLATION MODE IS USED IF SMOKE IS DETECTED.
10. DELETED
11. FOR DAMPER AND FAN MODE OF OPERATIONS SEE TABLES.
12. DAMPER CPX-VADPOU-14 OR -15 IS CLOSED BY THE OPERATOR WHEN SHUTTING DOWN THE ASSOCIATED TRAIN OF CRAC VENTILATION SYSTEM AFTER AN SI, BLACKOUT OR HIGH RADIATION SIGNAL.

R

REFERENCES:

1. M1-0313	FLOW DIAGRAM - VENTILATION AAP BLDG AND CONTROL BLDG UPS AREA A/C SYSTEMS
M1-0200	MECHANICAL SYMBOLS AND NOTES
3. M1-0304 M1-0304-A M1-0304-B	FLOW DIAGRAM - VENTILATION CONTROL ROOM AIR CONDITIONING

FSAR FIGURE 9.4-1

THIS DRAWING CREATED ELECTRONICALLY

DRAWING M1-0308 REV CP-4
HAS BEEN SPLIT INTO THE FOLLOWING SHEETS:
M1-0308
M1-0308-A

CLASS I
(NUCLEAR SAFETY-RELATED)
SAFETY CLASS 1 — SEISMIC CATEGORY I
SAFETY CLASS 2 — CLASS 1E
SAFETY CLASS 3 — ASSOCIATED CIRCUITS

LUMINANT
CPSES
GLEN ROSE, TEXAS

FLOW DIAGRAM - VENTILATION
CONTROL ROOM AIR CONDITIONING

DWG. NO. M1-0308 | SH. NO. A | REV. CP-5

FINAL PRINT

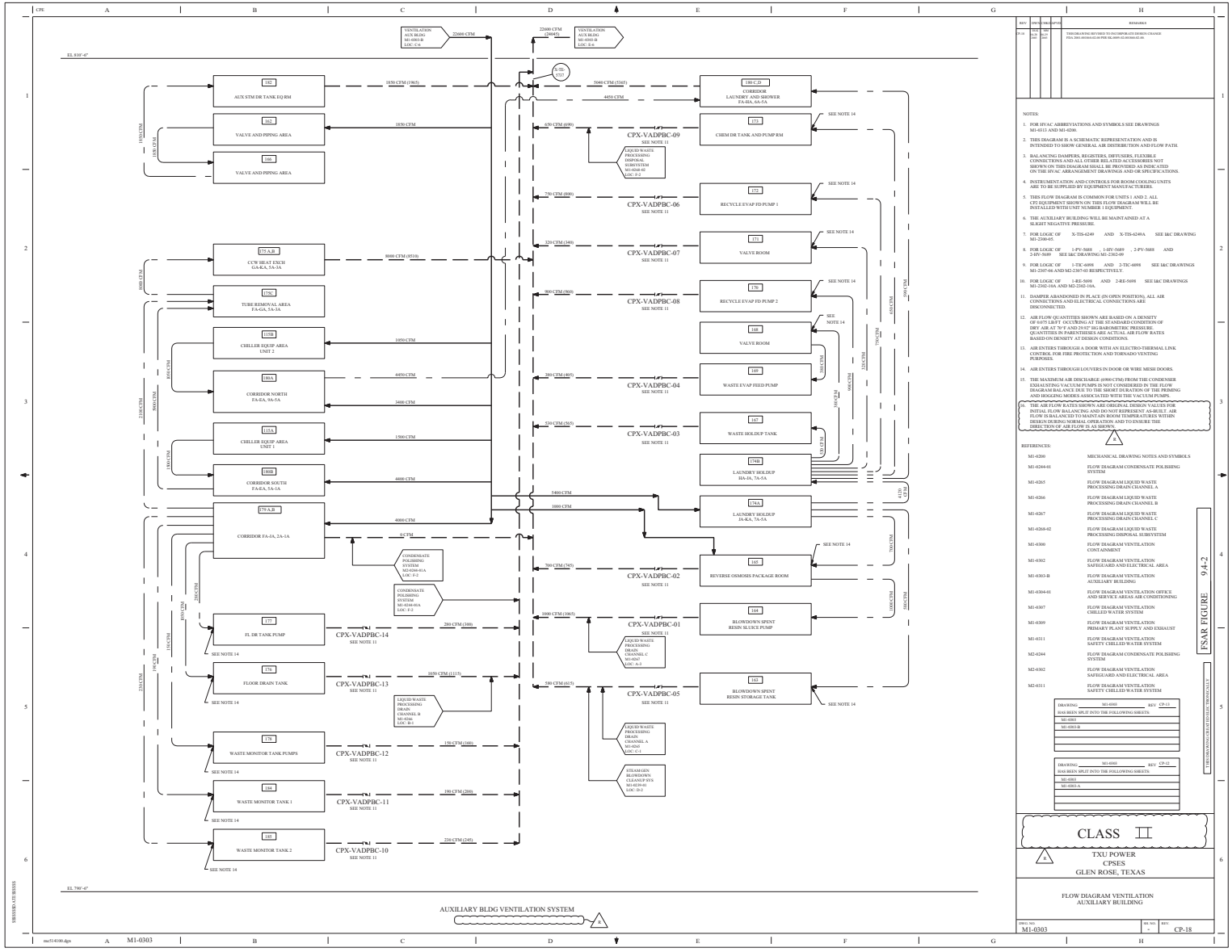
VENTILATION AUX BLDG M1-0303-B LOC: C-6
22600 CFM
22600 CFM (2464)
VENTILATION AUX BLDG M1-0303-B LOC: E-6
EL 810'-6"
EL 790'-6"
X-TIS-1727
5040 CFM (5165)
4450 CFM
1850 CFM (1965)
1850 CFM
1050 CFM
4450 CFM
3400 CFM
1500 CFM
4400 CFM
4000 CFM
0 CFM
280 CFM (300)
1050 CFM (1115)
150 CFM (160)
190 CFM (200)
230 CFM (245)
5400 CFM
1000 CFM
780 CFM (7545)
1000 CFM (1065)
580 CFM (615)
320 CFM (340)
8000 CFM (8510)
900 CFM (960)
380 CFM (405)
530 CFM (565)
650 CFM
1960 CFM
1320 CFM
1960 CFM
1960 CFM
1960

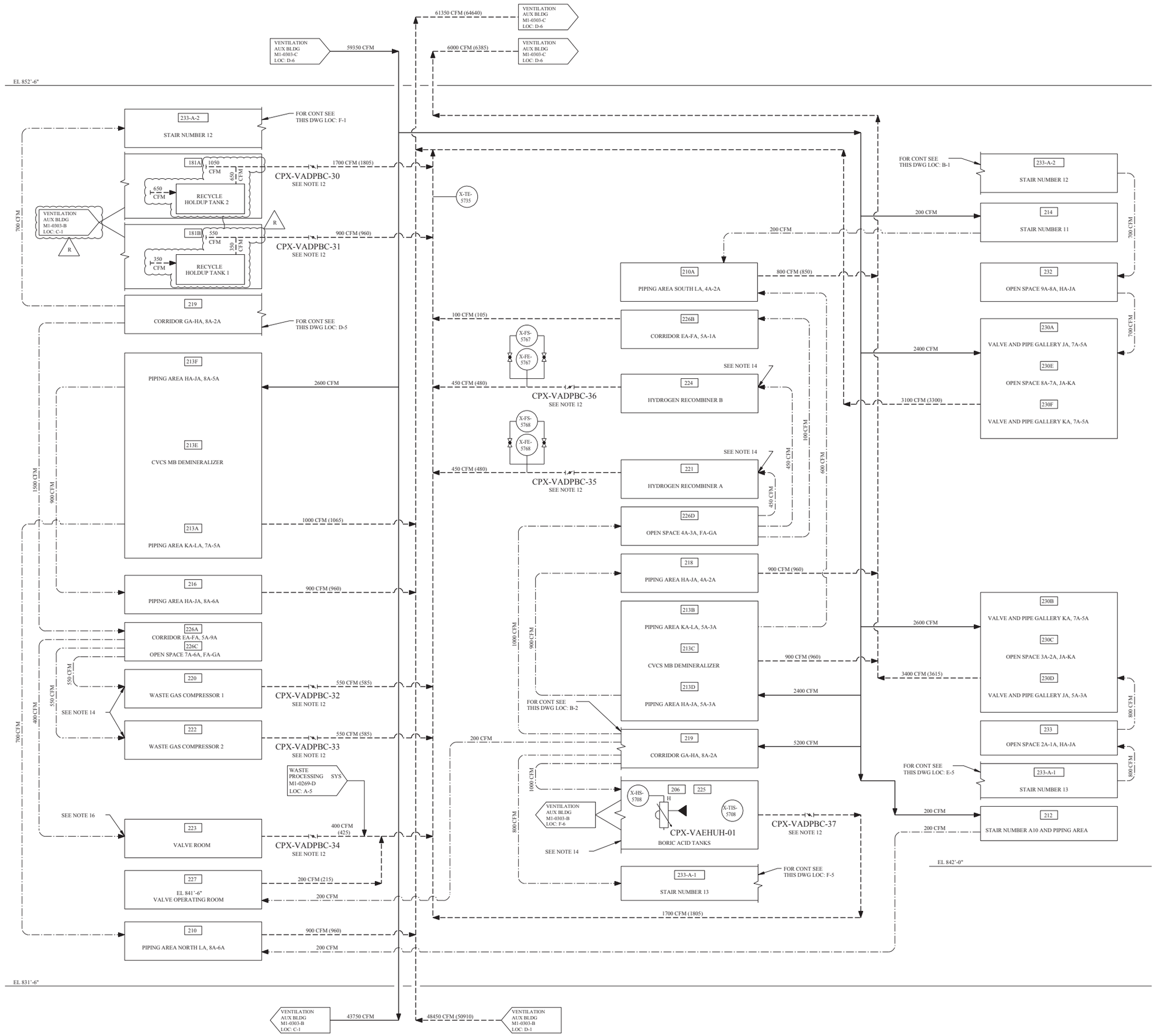

AUXILIARY BLDG VENTILATION SYSTEM

REV	DWN	CHKD	APVD	REMARKS
CP-8	DLK 11-15-2004	MM 11-15-2004		THIS DRAWING REVISED TO INCORPORATE DESIGN CHANGE FDA 2004-003380-01-00 PER SK-0001-04-003380-01-00.

NOTES:

1. FOR HVAC ABBREVIATIONS AND SYMBOLS SEE DRAWINGS M1-0313 AND M1-0200.
2. DELETED
3. THIS DIAGRAM IS A SCHEMATIC REPRESENTATION AND IS INTENDED TO SHOW GENERAL AIR DISTRIBUTION AND FLOW PATH.
4. BALANCING DAMPERS, REGISTERS, DIFFUSERS, FLEXIBLE CONNECTIONS AND ALL OTHER RELATED ACCESSORIES NOT SHOWN ON THIS DIAGRAM SHALL BE PROVIDED AS INDICATED ON THE HVAC ARRANGEMENT DRAWINGS AND OR SPECIFICATIONS.
5. INSTRUMENTATION AND CONTROLS FOR ROOM COOLING UNITS ARE TO BE SUPPLIED BY EQUIPMENT MANUFACTURERS.
6. THIS FLOW DIAGRAM IS COMMON FOR UNITS 1 AND 2. ALL CP2 EQUIPMENT SHOWN ON THIS FLOW DIAGRAM WILL BE INSTALLED WITH UNIT NUMBER 1 EQUIPMENT.
7. THE AUXILIARY BUILDING WILL BE MAINTAINED AT A SLIGHT NEGATIVE PRESSURE.
8. FOR LOGIC OF X-TIS-6249 AND X-TIS-6249A SEE I&C DRAWING M1-2300-05.
9. FOR LOGIC OF 1-PV-5688 , 1-HV-5689 , 2-PV-5688 AND 2-HV-5689 SEE I&C DRAWING M1-2302-09
10. FOR LOGIC OF 1-TIC-6098 AND 2-TIC-6098 SEE I&C DRAWINGS M1-2307-06 AND M2-2307-09 RESPECTIVELY.
11. FOR LOGIC OF 1-RE-5698 AND 2-RE-5698 SEE I&C DRAWINGS M1 AND M2-2302 SERIES.
12. DAMPER ABANDONED IN PLACE (IN OPEN POSITION). ALL AIR CONNECTIONS AND ELECTRICAL CONNECTIONS ARE DISCONNECTED.
13. AIR FLOW QUANTITIES SHOWN ARE BASED ON A DENSITY OF 0.075 LB/FT OCCURING AT THE STANDARD CONDITION OF DRY AIR AT 70°F AND 29.92" HG BAROMETRIC PRESSURE. QUANTITIES IN PARENTHESES ARE ACTUAL AIR FLOW RATES BASED ON DENSITY AT DESIGN CONDITIONS.
14. AIR ENTERS THROUGH A DOOR WITH AN ELECTRO-THERMAL LINK CONTROL FOR FIRE PROTECTION AND TORNADO VENTING PURPOSES.
15. DELETED
16. AIR ENTERS THROUGH LOUVERS IN DOOR OR WIRE MESH DOORS.
17. THE MAXIMUM AIR DISCHARGE (6900 CFM) FROM THE CONDENSER EXHAUSTING VACUUM PUMPS IS NOT CONSIDERED IN THE FLOW DIAGRAM BALANCE DUE TO THE SHORT DURATION OF THE PRIMING AND HOGGING MODES ASSOCIATED WITH THE VACUUM PUMPS.
18. THE AIR FLOW RATES SHOWN ARE ORIGINAL DESIGN VALUES FOR INITIAL FLOW BALANCING AND DO NOT REPRESENT AS-BUILT. AIR FLOW IS BALANCED TO MAINTAIN ROOM TEMPERATURES WITHIN DESIGN DURING NORMAL OPERATION AND TO ENSURE THE DIRECTION OF AIR FLOW IS AS SHOWN.

REFERENCES:

M1-0200	MECHANICAL DRAWING NOTES AND SYMBOLS
M1-0263	FLOW DIAGRAM SAFETY INJECTION SYSTEM
M1-0300	FLOW DIAGRAM VENTILATION CONTAINMENT
M1-0302	FLOW DIAGRAM VENTILATION SAFEGUARD AND ELECTRICAL AREA
M1-0303-B	FLOW DIAGRAM VENTILATION AUXILIARY BUILDING
M1-0303-C	FLOW DIAGRAM VENTILATION AUXILIARY BUILDING
M1-0304-01	FLOW DIAGRAM VENTILATION OFFICE AND SERVICE AREAS AIR CONDITIONING
M1-0307	FLOW DIAGRAM VENTILATION CHILLED WATER SYSTEM
M1-0309	FLOW DIAGRAM VENTILATION PRIMARY PLANT SUPPLY AND EXHAUST
M1-0311	FLOW DIAGRAM VENTILATION SAFETY CHILLED WATER SYSTEM
M2-0302	FLOW DIAGRAM VENTILATION SAFEGUARD AND ELECTRICAL AREA
M2-0311	FLOW DIAGRAM VENTILATION SAFETY CHILLED WATER SYSTEM

FSAR FIGURE 9.4-2

THIS DRAWING CREATED ELECTRONICALLY

DRAWING M1-0303-A REV CP-1
HAS BEEN SPLIT INTO THE FOLLOWING SHEETS:
M1-0303-A
M1-0303-C

DRAWING M1-0303 REV CP-12
HAS BEEN SPLIT INTO THE FOLLOWING SHEETS:
M1-0303
M1-0303-A

CLASS II

LUMINANT
CPSES
GLEN ROSE, TEXAS

FLOW DIAGRAM VENTILATION
AUXILIARY BUILDING

DWG. NO. M1-0303 | SH. NO. A | REV. CP-8

REF CHKD 3/22/2001

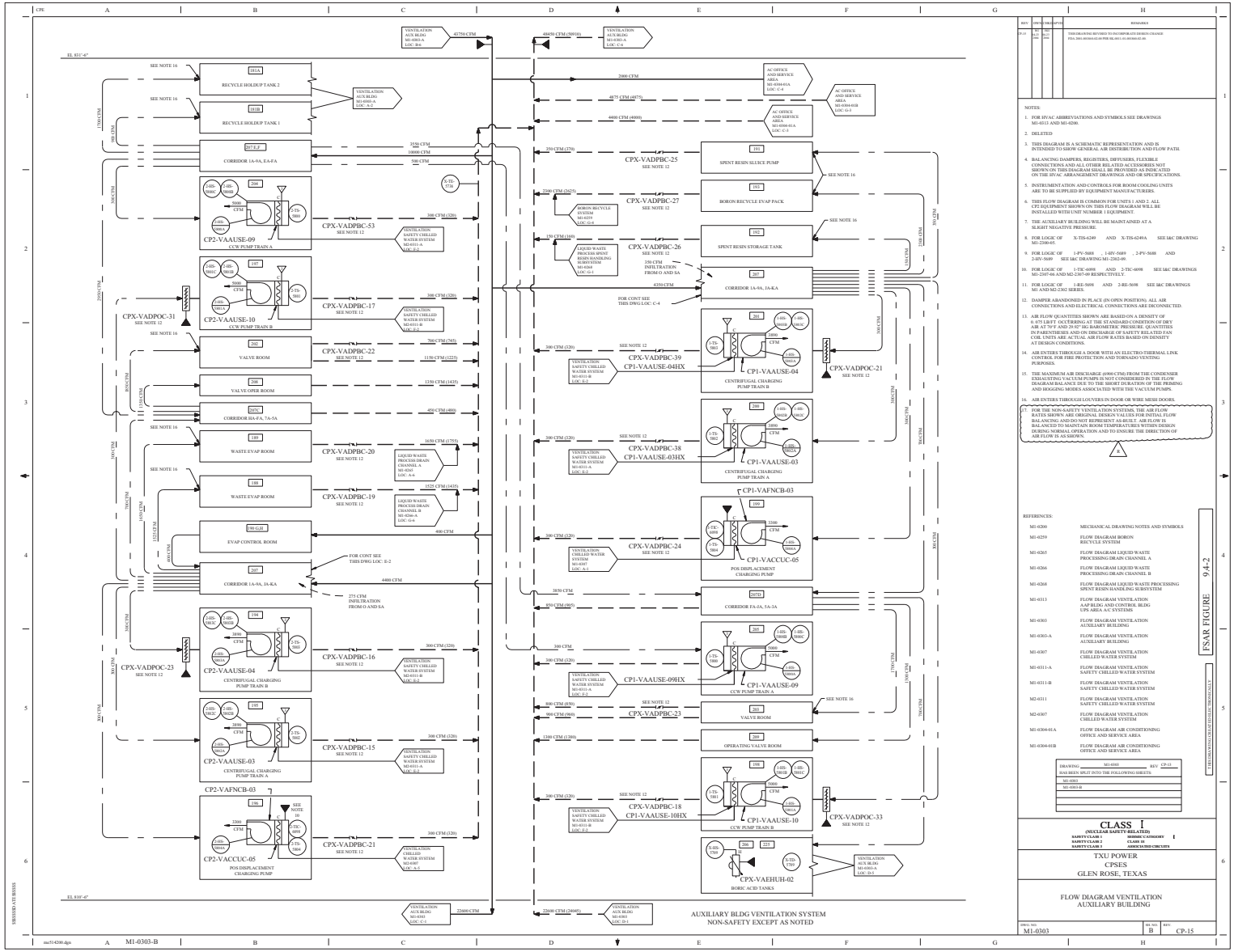
AUXILIARY BLDG VENTILATION SYSTEM
NON-SAFETY EXCEPT AS NOTED
EL 831'-6"
EL 810'-6"
CPE
M1-0303-B
SEE NOTE 16
181A
RECYCLE HOLDUP TANK 2
181B
RECYCLE HOLDUP TANK 1
207 E,F
CORRIDOR 1A-9A, EA-FA
204
CP2-VAAUSE-09
CCW PUMP TRAIN A
197
CP2-VAAUSE-10
CCW PUMP TRAIN B
202
VALVE ROOM
208
VALVE OPER ROOM
207C
CORRIDOR 8A-FA, 7A-9A
189
WASTE EVAP ROOM
188
WASTE EVAP ROOM
190 G,H
EVAP CONTROL ROOM
207
CORRIDOR 1A-9A, 2A-KA
194
CP2-VAAUSE-04
CENTRIFUGAL CHARGING
PUMP TRAIN B
195
CP2-VAAUSE-03
CENTRIFUGAL CHARGING
PUMP TRAIN A
CP2-VAFNCB-03
196
CP2-VACCUC-05
POS DISPLACEMENT
CHARGING PUMP
CPX-VADPOC-31
SEE NOTE 12
CPX-VADPOC-23
SEE NOTE 12
CPX-VADPBC-53
CPX-VADPBC-17
CPX-VADPBC-22
CPX-VADPBC-20
CPX-VADPBC-19
CPX-VADPBC-16
CPX-VADPBC-15
CPX-VADPBC-21
SEE NOTE 12
VENTILATION AUX BLDG MI-0303-A LOC: B-6
VENTILATION AUX BLDG MI-0303-A LOC: C-6
VENTILATION AUX BLDG MI-0303-A LOC: C-1
VENTILATION AUX BLDG MI-0303 LOC: D-1
VENTILATION SAFETY CHILLED WATER SYSTEM MI-0311-A LOC: E-3
VENTILATION SAFETY CHILLED WATER SYSTEM MI-0311-B LOC: E-3
VENTILATION CHILLED WATER SYSTEM MI-0307 LOC: A-3
LIQUID WASTE PROCESS DRAIN CHANNEL A MI-0265 LOC: A-6
LIQUID WASTE PROCESS DRAIN CHANNEL B MI-0266-A LOC: G-6
FOR CONT SEE THRS DWG LOC: I-2
FOR CONT SEE THIS DWG LOC: C-4
42750 CFM
44459 CFM (5091b)
2000 CFM
4875 CFM (4875)
4400 CFM (4000)
3550 CFM
10000 CFM
500 CFM
X-TE-5726
17000 CFM
600 CFM
360 CFM
3500 CFM
3500 CFM
360 CFM (320)
360 CFM (320)
700 CFM (745)
1150 CFM (1225)
1350 CFM (1435)
450 CFM (480)
1650 CFM (1755)
1525 CFM (1435)
400 CFM
4460 CFM
275 CFM INFILTRATION FROM O AND SA
360 CFM (320)
360 CFM (320)
360 CFM (320)
360 CFM (320)
SEE NOTE 10
CPX-VADPBC-25
SEE NOTE 12
CPX-VADPBC-27
SEE NOTE 12
CPX-VADPBC-26
SEE NOTE 12
350 CFM INFILTRATION FROM O AND SA
4350 CFM
CPX-VADPBC-39
CPX-VADPBC-38
CPX-VADPBC-24
SEE NOTE 12
CPX-VADPBC-18
CPX-VADPBC-10HX
CPX-VADPBC-23
SEE NOTE 12
CPX-VADPOC-21
SEE NOTE 12
CPX-VADPOC-33
SEE NOTE 12
CP1-VAAUSE-04HX
CP1-VAAUSE-03HX
CP1-VAAUSE-09HX
CP1-VAAUSE-10HX
CP1-VAFNCB-03
CP1-VACCUC-05
POS DISPLACEMENT
CHARGING PUMP
CP1-VAAUSE-04
CENTRIFUGAL CHARGING
PUMP TRAIN B
CP1-VAAUSE-03
CENTRIFUGAL CHARGING
PUMP TRAIN A
CP1-VAAUSE-09
CCW PUMP TRAIN A
CP1-VAAUSE-10
CCW PUMP TRAIN B
SPENT RESIN SLUICE PUMP
BORON RECYCLE EVAP PACK
SPENT RESIN STORAGE TANK
CORRIDOR 1A-9A, 1A-KA
CORRIDOR FA-FA, 5A-3A
VALVE ROOM
OPERATING VALVE ROOM
CPX-VAEHUH-02
BORIC ACID TANKS
AC OFFICE AND SERVICE AREA MI-0304-01A LOC: C-4
AC OFFICE AND SERVICE AREA MI-0304-01B LOC: G-5
AC OFFICE AND SERVICE AREA MI-0304-01A LOC: C-3
BORON RECYCLE SYSTEM MI-0259 LOC: G-6
LIQUID WASTE PROCESS RESIN HANDLING SUBSYSTEM MI-0263 LOC: G-1
22600 CFM
22600 CFM (20445)
REV
DRN
CHKD
APVD
REMARKS
THIS DRAWING REVISED TO INCORPORATE DESIGN CHANGE FDA 2001-0019-01-01 PER ML0411-15-00101-02-101
NOTES:
1. FOR HVAC ABBREVIATIONS AND SYMBOLS SEE DRAWINGS M1-0113 AND M1-0200.
2. DELETED
3. THIS DIAGRAM IS A SCHEMATIC REPRESENTATION AND IS INTENDED TO SHOW GENERAL AIR DISTRIBUTION AND FLOW PATH.
4. BALANCING DAMPERS, REGISTERS, DIFFUSERS, FLEXIBLE CONNECTIONS AND ALL OTHER RELATED ACCESSORIES NOT SHOWN ON THIS DIAGRAM SHALL BE PROVIDED AS INDICATED ON THE HVAC ARRANGEMENT DRAWINGS AND OR SPECIFICATIONS.
5. INSTRUMENTATION AND CONTROLS FOR ROOM COOLING UNITS ARE TO BE SUPPLIED BY EQUIPMENT MANUFACTURERS.
6. THIS FLOW DIAGRAM IS COMMON FOR UNITS 1 AND 2. ALL CP1 EQUIPMENT SHOWN ON THIS FLOW DIAGRAM WILL BE INSTALLED WITH UNIT NUMBER 1 EQUIPMENT.
7. THE AUXILIARY BUILDING WILL BE MAINTAINED AT A SLIGHT NEGATIVE PRESSURE.
8. FOR LOGIC OF X-TIS-6249 AND X-TIS-6249A SEE I&C DRAWING M1-2300-07.
9. FOR LOGIC OF 1-PV-5688 , 1-MV-5689 , 2-PV-5688 AND 2-MV-5689 SEE I&C DRAWING M1-2302-09.
10. FOR LOGIC OF 1-TIC-6098 AND 2-TIC-6098 SEE I&C DRAWINGS M1-2307-04 AND M2-2307-09 RESPECTIVELY.
11. FOR LOGIC OF 1-RE-5698 AND 2-RE-5698 SEE I&C DRAWINGS M1 AND M2-2302 SERIES.
12. DAMPER ABANDONED IN PLACE (IN OPEN POSITION), ALL AIR CONNECTIONS AND ELECTRICAL CONNECTIONS ARE DICONNECTED.
13. AIR FLOW QUANTITIES SHOWN ARE BASED ON A DENSITY OF 0. 075 LB/CF, OCCURRING AT THE STANDARD CONDITION OF DRY AIR AT 70°F AND 29.92" HG BAROMETRIC PRESSURE. QUANTITIES IN PARENTHESES AND ON DISCHARGE OF SAFETY RELATED FAN COIL UNITS ARE ACTUAL AIR FLOW RATES BASED ON DENSITY AT DESIGN CONDITIONS.
14. AIR ENTERS THROUGH A DOOR WITH AN ELECTRO-THERMAL LINK CONTROL FOR FIRE PROTECTION AND TORNADO VENTING PURPOSES.
15. THE MAXIMUM AIR DISCHARGE (6900 CFM) FROM THE CONDENSER EXHAUSTING VACUUM PUMPS IS NOT CONSIDERED IN THE FLOW DIAGRAM BALANCE DUE TO THE SHORT DURATION OF THE PRIMING AND HOGGING MODES ASSOCIATED WITH THE VACUUM PUMPS.
16. AIR ENTERS THROUGH LOUVERS IN DOOR OR WIRE MESH DOORS.
17. FOR THE NON-SAFETY VENTILATION SYSTEMS, THE AIR FLOW RATES SHOWN ARE ORIGINAL DESIGN VALUES FOR INITIAL FLOW BALANCING AND DO NOT REPRESENT AS-BUILT. AIR FLOW IS BALANCED TO MAINTAIN ROOM TEMPERATURES WITHIN DESIGN DURING NORMAL OPERATION AND TO ENSURE THE DIRECTION OF AIR FLOW IS AS SHOWN.
A.
REFERENCES:
M1-0200 MECHANICAL DRAWING NOTES AND SYMBOLS
M1-0259 FLOW DIAGRAM BORON RECYCLE SYSTEM
M1-0265 FLOW DIAGRAM LIQUID WASTE PROCESSING DRAIN CHANNEL A
M1-0266 FLOW DIAGRAM LIQUID WASTE PROCESSING DRAIN CHANNEL B
M1-0268 FLOW DIAGRAM LIQUID WASTE PROCESSING SPENT RESIN HANDLING SUBSYSTEM
M1-0313 FLOW DIAGRAM VENTILATION AAP BLDG AND CONTROL BLDG VPS AREA A/C SYSTEMS
M1-0303 FLOW DIAGRAM VENTILATION AUXILIARY BUILDING
M1-0303-A FLOW DIAGRAM VENTILATION AUXILIARY BUILDING
M1-0307 FLOW DIAGRAM VENTILATION CHILLED WATER SYSTEM
M1-0311-A FLOW DIAGRAM VENTILATION SAFETY CHILLED WATER SYSTEM
M1-0311-B FLOW DIAGRAM VENTILATION SAFETY CHILLED WATER SYSTEM
M2-0311 FLOW DIAGRAM VENTILATION SAFETY CHILLED WATER SYSTEM
M2-0307 FLOW DIAGRAM VENTILATION CHILLED WATER SYSTEM
M1-0304-01A FLOW DIAGRAM AIR CONDITIONING OFFICE AND SERVICE AREA
M1-0304-01B FLOW DIAGRAM AIR CONDITIONING OFFICE AND SERVICE AREA
DRAWING M1-0303 REV CP-13
HAS BEEN SPLIT INTO THE FOLLOWING SHEETS
M1-0303
M1-0303-B
FSAR FIGURE 9.4-2
THIS DRAWING CLASSIFIED AS FUEL HANDLING AREA
CLASS I
(NUCLEAR SAFETY RELATED)
SAFETY CLASS 1 SEISMIC CATEGORY I
SAFETY CLASS 2 CLASS 1E
SAFETY CLASS 3 ASSOCIATED CIRCUITS
TXU POWER
CPSES
GLEN ROSE, TEXAS
FLOW DIAGRAM VENTILATION
AUXILIARY BUILDING
DWG NO M1-0303
SH NO B
REV CP-15
SBSSSSDS AUE BSSSS
ma514200.dgn

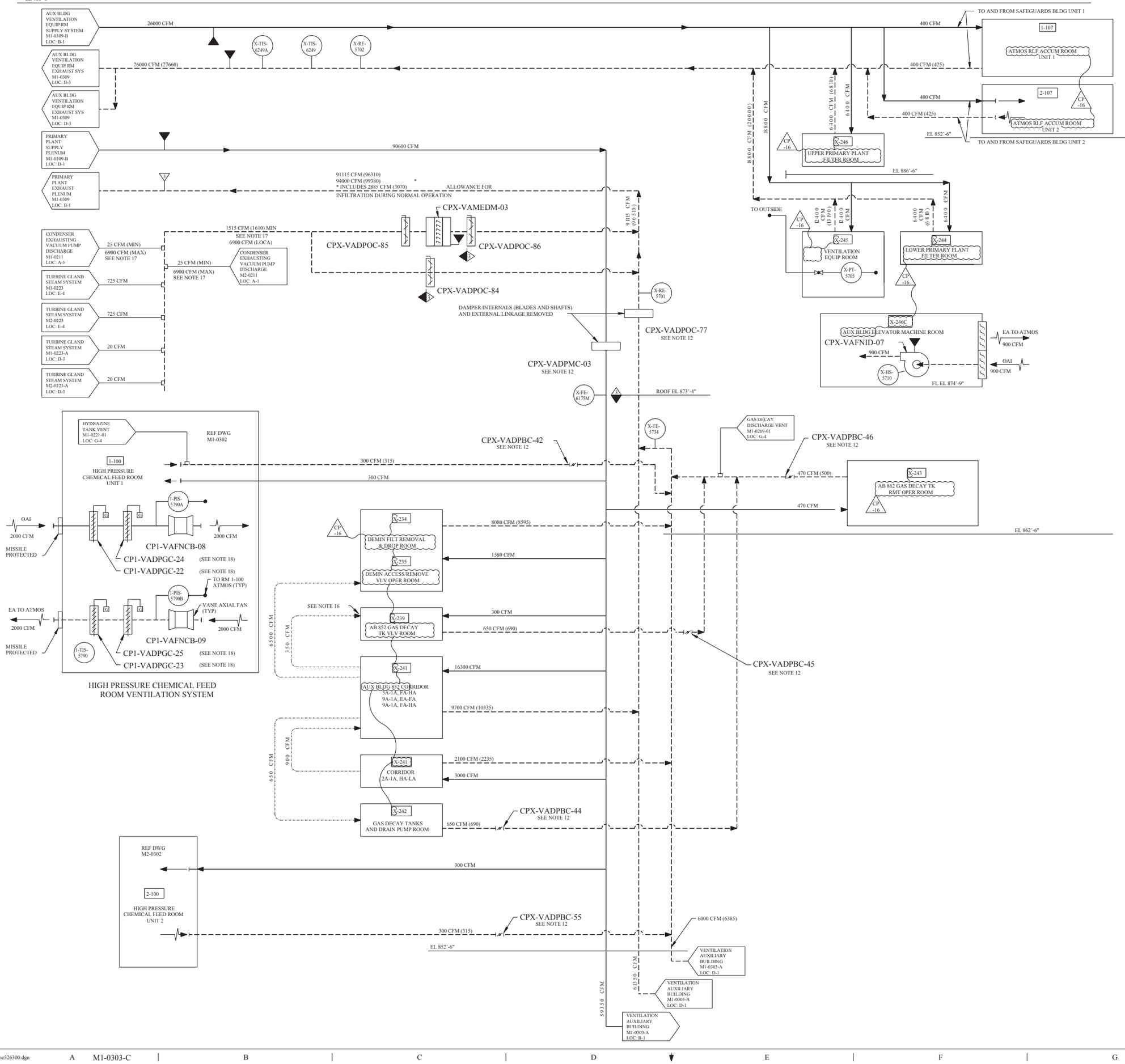

REV	DWN	CHKD	APVD	REMARKS
CP-16	CWG 05-05-2014			THIS DRAWING REVISED TO INCORPORATE EDITORIAL CHANGES PER A1-CR-2014-004067-1.

NOTES:

1. FOR HVAC ABBREVIATIONS AND SYMBOLS SEE DRAWINGS M1-0313 AND M1-0200.
2. DELETED
3. THIS DIAGRAM IS A SCHEMATIC REPRESENTATION AND IS INTENDED TO SHOW GENERAL AIR DISTRIBUTION AND FLOW PATH.
4. BALANCING DAMPERS, REGISTERS, DIFFUSERS, FLEXIBLE CONNECTIONS AND ALL OTHER RELATED ACCESSORIES NOT SHOWN ON THIS DIAGRAM SHALL BE PROVIDED AS INDICATED ON THE HVAC ARRANGEMENT DRAWINGS AND OR SPECIFICATIONS.
5. INSTRUMENTATION AND CONTROLS FOR ROOM COOLING UNITS ARE TO BE SUPPLIED BY EQUIPMENT MANUFACTURERS.
6. THIS FLOW DIAGRAM IS COMMON FOR UNITS 1 AND 2. ALL CP2 EQUIPMENT SHOWN ON THIS FLOW DIAGRAM WILL BE INSTALLED WITH UNIT NUMBER 1 EQUIPMENT.
7. THE AUXILIARY BUILDING WILL BE MAINTAINED AT A SLIGHT NEGATIVE PRESSURE.
8. FOR LOGIC OF X-TIS-6249 AND X-TIS-6249A SEE I&C DRAWING M1-2300-05.
9. FOR LOGIC OF 1-PV-5688 , 1-HV-5689 , 2-PV-5688 AND 2-HV-5689 SEE I&C DRAWING M1-2302-09
10. FOR LOGIC OF 1-TIC-6098 AND 2-TIC-6098 SEE I&C DRAWINGS M1-2307-06 AND M2-2307-09 RESPECTIVELY.
11. FOR LOGIC OF 1-RE-5698 AND 2-RE-5698 SEE I&C DRAWINGS M1 AND M2-2302 SERIES.
12. DAMPER ABANDONED IN-PLACE (IN OPEN POSITION). ALL AIR CONNECTIONS AND ELECTRICAL CONNECTIONS ARE DISCONNECTED.
13. AIR FLOW QUANTITIES SHOWN ARE BASED ON A DENSITY OF 0.075 LB/FT OCCURRING AT THE STANDARD CONDITION OF DRY AIR AT 70□F AND 29.92" HG BAROMETRIC PRESSURE. QUANTITIES IN PARENTHESES ARE ACTUAL AIR FLOW RATES BASED ON DENSITY AT DESIGN CONDITIONS.
14. AIR ENTERS THROUGH A DOOR WITH AN ELECTRO-THERMAL LINK CONTROL FOR FIRE PROTECTION AND TORNADO VENTING PURPOSES.
15. DELETED
16. AIR ENTERS THROUGH LOUVERS IN DOOR OR WIRE MESH DOORS.
17. THE MAXIMUM AIR DISCHARGE (6900 CFM) FROM THE CONDENSER EXHAUSTING VACUUM PUMPS IS NOT CONSIDERED IN THE FLOW DIAGRAM BALANCE DUE TO THE SHORT DURATION OF THE PRIMING AND HOGGING MODES ASSOCIATED WITH THE VACUUM PUMPS.
18. DAMPERS CP1-VADPGC-22 , CP1-VADPGC-23 , CP1-VADPGC-24 AND CP1-VADPGC-25 WERE RETAGGED FROM DAMPERS CP2-VADPGC-16 , CP2-VADPGC-17 , CP2-VADPGC-18 AND CP2-VADPGC-15 RESPECTIVELY.
19. THE AIR FLOW RATES SHOWN ARE ORIGINAL DESIGN VALUES FOR INITIAL FLOW BALANCING AND DO NOT REPRESENT AS-BUILT. AIR FLOW IS BALANCED TO MAINTAIN ROOM TEMPERATURES WITHIN DESIGN DURING NORMAL OPERATION AND TO ENSURE THE DIRECTION OF AIR FLOW IS AS SHOWN.

REFERENCES:

M1-0200	MECHANICAL DRAWING NOTES AND SYMBOLS
M1-0211	FLOW DIAGRAM CONDENSER VACUUM AND WATER BOX PRIMING SYSTEM
M1-0221	FLOW DIAGRAM CHEMICAL FEED SYSTEM STEAM GENERATOR RECIRCULATION SUBSYSTEMS
M1-0225	FLOW DIAGRAM FIRE PROTECTION SYSTEM
M1-0269	FLOW DIAGRAM WASTE PROCESSING (GAS)
M1-0302	FLOW DIAGRAM VENTILATION SAFEGUARDS AND ELECTRICAL AREA
M1-0303-A	FLOW DIAGRAM VENTILATION AUXILIARY BUILDING
M1-0309	FLOW DIAGRAM VENTILATION PRIMARY PLANT SUPPLY AND EXHAUST
M1-0309-B	FLOW DIAGRAM VENTILATION PRIMARY PLANT SUPPLY AND EXHAUST
M2-0302	FLOW DIAGRAM VENTILATION SAFEGUARDS AND ELECTRICAL AREA
M1-0313	FLOW DIAGRAM VENTILATION AAP BLDG AND CONTROL BLDG UPS AREA A/C SYSTEMS

FSAR FIGURE 9.4-2

THIS DRAWING CREATED ELECTRONICALLY

DRAWING M1-0303-A REV CP-1 HAS BEEN SPLIT INTO THE FOLLOWING SHEETS:

M1-0303-A
M1-0303-C

CLASS I
(NUCLEAR SAFETY-RELATED)

SAFETY CLASS 1	SEISMIC CATEGORY I
SAFETY CLASS 2	CLASS 1E
SAFETY CLASS 3	ASSOCIATED CIRCUITS

LUMINANT
CPNPP
GLEN ROSE, TEXAS

FLOW DIAGRAM VENTILATION AUXILIARY BUILDING

DWG NO. M1-0303 | SH. NO. C | REV. CP-16

$$$$$$$DATE$$$$$$ REF CHKD 10/24/2003

me526300.dgn A M1-0303-C B C D E F G < FINAL PRINT > H

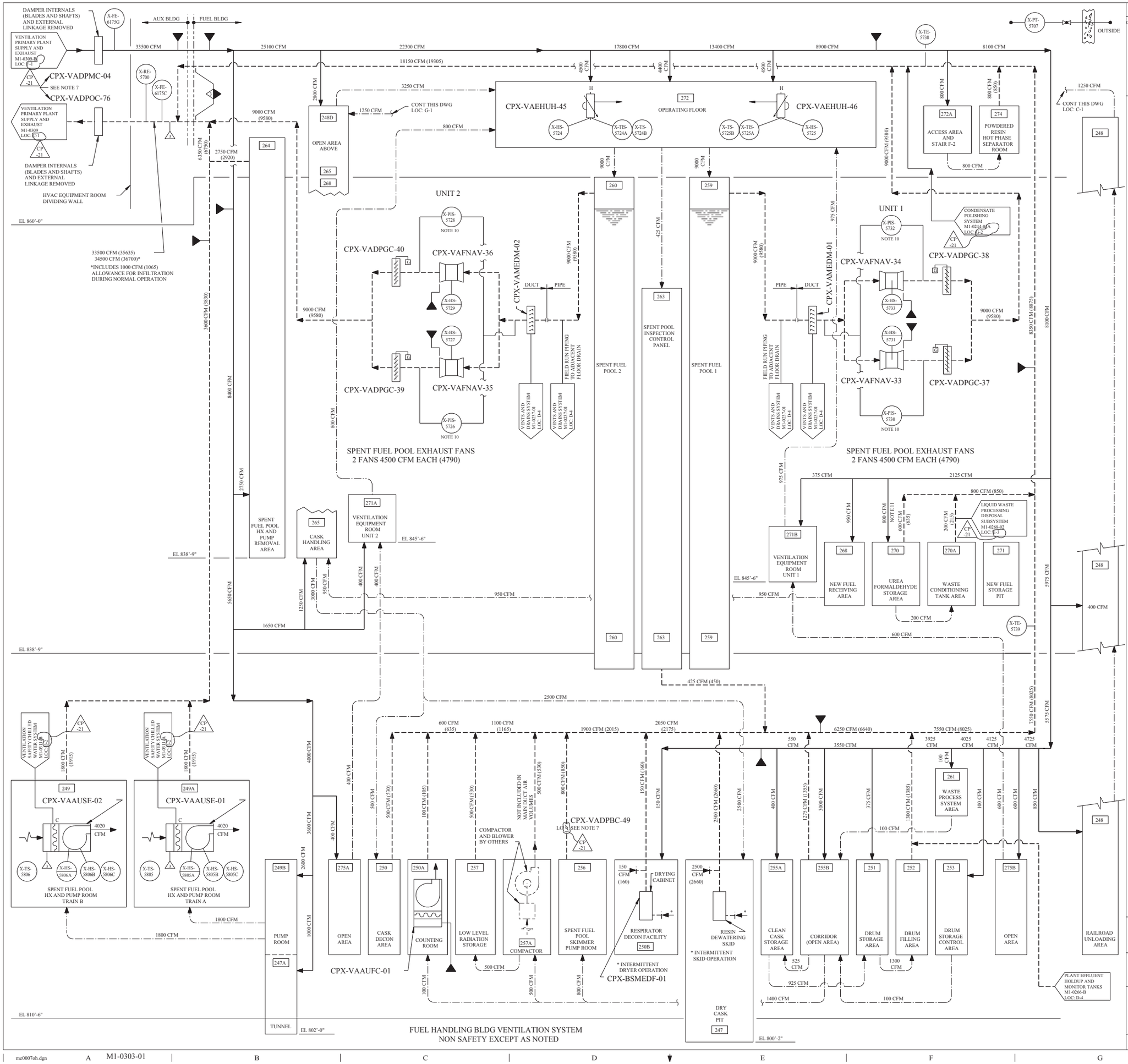

REV	DWN	CHKD	APVD	REMARKS
CP-21	DLK 06-03-2010			THIS DRAWING REVISED TO EDITORIALLY CORRECT DRAWING REFERENCES PER CR-2010-007228 AND SHOW CORRECT VALVE SYMBOL FOR CPX-VDDPBC-49.

NOTES:

1. FOR ABBREVIATIONS AND SYMBOLS SEE DRAWINGS M1-0313 AND M1-0200.
2. THIS DIAGRAM IS A SCHEMATIC REPRESENTATION AND IS INTENDED TO SHOW GENERAL AIR DISTRIBUTION AND FLOW PATHS.
3. BALANCING DAMPERS, REGISTERS, DIFFUSERS, FLEXIBLE CONNECTIONS AND ALL OTHER RELATED ACCESSORIES NOT SHOWN ON THIS DIAGRAM SHALL BE PROVIDED AS INDICATED ON THE HVAC ARRANGEMENT DRAWING AND SPECIFICATIONS.
4. INSTRUMENTATION AND CONTROLS FOR ROOM COOLING UNITS ARE TO BE SUPPLIED BY EQUIPMENT MANUFACTURERS.
5. THE FUEL HANDLING BUILDING WILL BE MAINTAINED AT A SLIGHT NEGATIVE PRESSURE.
6. FOR LOGIC OF CHANNEL X-FE-6175C SEE ICD M1-2509.
7. DAMPER ABANDONED IN PLACE (IN OPEN POSITION). ALL AIR CONNECTIONS AND ELECTRICAL CONNECTIONS ARE DISCONNECTED.
8. AIR FLOW QUANTITIES SHOWN ARE BASED ON A DENSITY OF 0. 075 LB/FT OCCURRING AT THE STANDARD CONDITION OF DRY AIR AT 70°F AND 29.92" HG BAROMETRIC PRESSURE. QUANTITIES IN PARENTHESES AND ON DISCHARGE OF SAFETY RELATED FAN COIL UNITS ARE ACTUAL AIR FLOW RATES BASED ON DENSITY AT DESIGN CONDITIONS.
9. AIR FLOW FOR ROOM 270 INCLUDES ADDITIONAL 500 CFM RESERVED FOR ROOM 271 IF REQUIRED AT A LATER DATE.
10. THE ALARM FUNCTION OF THIS INSTRUMENT IS DEACTIVATED.

REFERENCES:

M1-0200	MECHANICAL SYMBOLS AND NOTES
M1-0237-01	FLOW DIAGRAM VENTS AND DRAINS SYSTEM TURBINE AND FUEL HANDLING BLDG SHEET 3 OF 4
M1-0244-01	FLOW DIAGRAM CONDENSATE POLISHING SYSTEM
M1-0268-02	FLOW DIAGRAM LIQUID WASTE PROCESSING DISPOSAL SUBSYSTEM
M1-0300	FLOW DIAGRAM VENTILATION CONTAINMENT
M1-0309	FLOW DIAGRAM VENTILATION PRIMARY PLANT SUPPLY AND EXHAUST
M1-0311	FLOW DIAGRAM VENTILATION SAFETY CHILLED WATER SYSTEM
M1-0313	FLOW DIAGRAM VENTILATION AAP BLDG AND CONTROL BLDG UPS AREA A/C SYSTEMS

FSAR FIGURE 9.4-2

THIS DRAWING CREATED ELECTRONICALLY

CLASS I

(NUCLEAR SAFETY-RELATED)

SAFETY CLASS 1	SEISMIC CATEGORY I
SAFETY CLASS 2	CLASS 1E
SAFETY CLASS 3	ASSOCIATED CIRCUITS

LUMINANT
CPNPP
GLEN ROSE, TEXAS

FLOW DIAGRAM
VENTILATION
FUEL HANDLING BUILDING

DWG. NO.	SH. NO.	REV.
M1-0303	01	CP-21

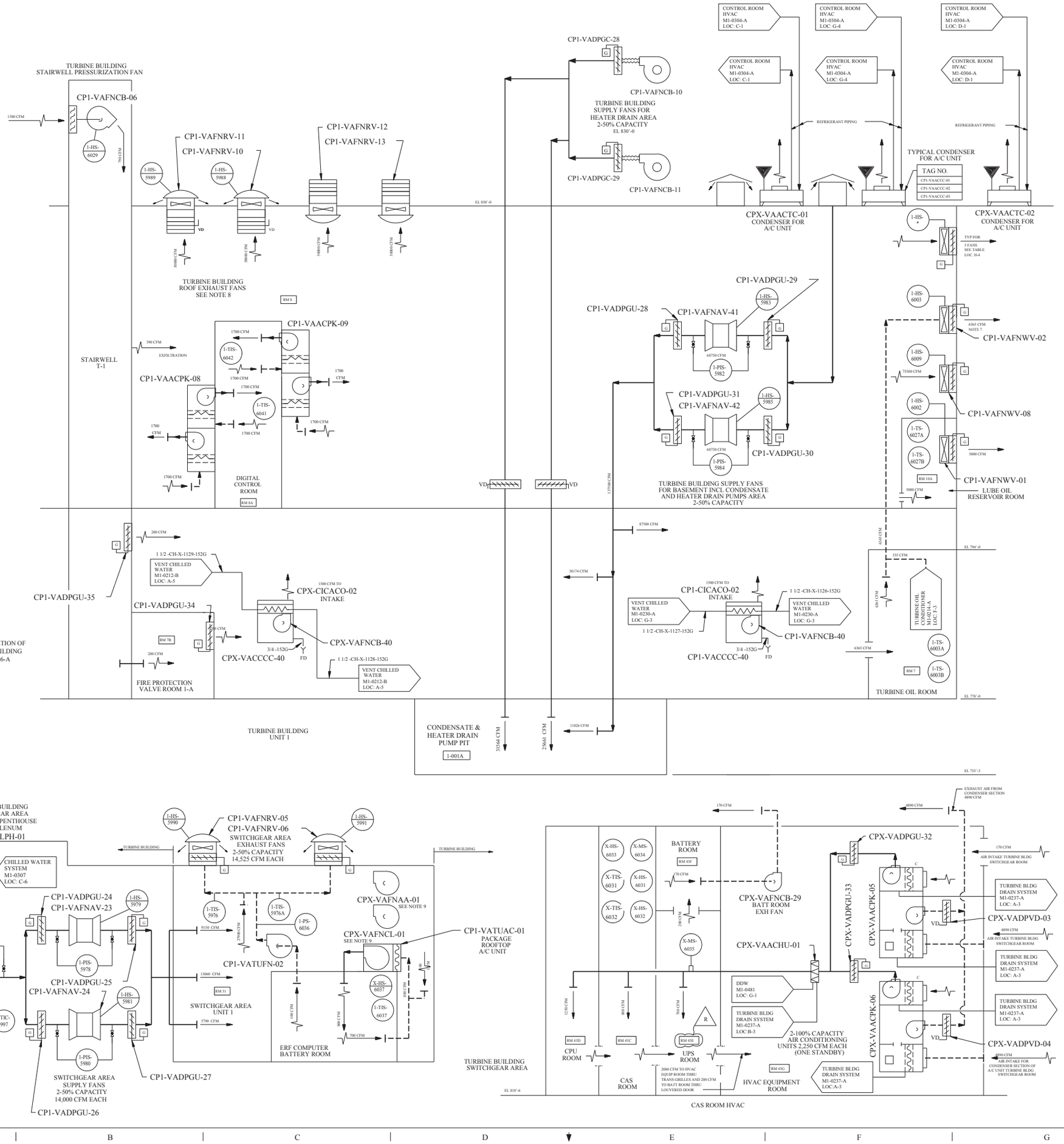

REV	DWN	CHKD	APVD	REMARKS
CP-30	JKG 04-21-2010	SM 04-21-2010		THIS DRAWING REVISED TO INCORPORATE DESIGN CHANGE FDA-2010-000075-01-00 PER SK-0001-10-000075-01-00.

NOTES:

1. FOR HVAC ABBREVIATIONS AND SYMBOLS SEE DWG M1-0313.
2. FOR I&C AND MECHANICAL SYMBOLS SEE DWG M1-0200.
3. THIS DIAGRAM IS A SCHEMATIC REPRESENTATION AND IS INTENDED TO SHOW GENERAL AIR DISTRIBUTION AND FLOW PLANS.
4. BALANCING DAMPERS, REGISTERS, DIFFUSERS, FLEXIBLE CONNECTIONS AND ALL OTHER RELATED ACCESSORIES NOT SHOWN ON THIS DIAGRAM SHALL BE PROVIDED AS INDICATED ON THE HVAC ARRANGEMENT DRAWING AND SPECIFICATION.
5. THE TURBINE BUILDING AND SWITCHGEAR AREA WILL BE MAINTAINED AT ATMOSPHERIC PRESSURE.
6. ALL ROOT VALVES FOR DIFFERENTIAL PRESSURE INDICATING SWITCHES SHOWN ON THIS DRAWING WILL BE SUPPLIED BY SPECIFICATION MS-85.
7. AIR FLOW QUANTITY FOR CP1-VAFNWV-02 , LOC G-2 REFLECTS EQUIPMENT AS BUILT CAPACITY.
8. THERE ARE FOUR ROOF EXHAUST FANS: THREE ARE RUNNING AND ONE IS KEPT IN STANDBY.
9. FAN ABANDONED IN PLACE WITH ALL CONNECTING DUCTWORK REMOVED.
10. AIR FLOW RATES SHOWN ARE ORIGINAL DESIGN VALUES FOR INITIAL FLOW BALANCING AND DO NOT REPRESENT AS-BUILT. AIR FLOW IS BALANCED TO MAINTAIN ROOM TEMPERATURES WITHIN DESIGN DURING NORMAL OPERATION AND TO ENSURE THE DIRECTION OF AIR FLOW IS AS SHOWN.

REFERENCES:

1. M1-0313	FLOW DIAGRAM-VENTILATION AAP BLDG AND CONTROL BLDG UPS AREA A/C SYSTEMS
2. M1-0200	MECHANICAL SYMBOLS AND NOTES

TURBINE BUILDING
WALL VENTILATORS (LOC. G-2)

TAG NO	CFM	I-HS-
CP1-VAFNWV-03	75,500	6004
CP1-VAFNWV-04	75,500	6005
CP1-VAFNWV-05	75,500	6006
CP1-VAFNWV-06	75,500	6007
CP1-VAFNWV-07	75,500	6008

DRAWING M1-0306 REV CP-18
HAS BEEN SPLIT INTO THE FOLLOWING SHEETS:
M1-0306
M1-0306-A

FSAR FIGURE 9.4-3

THIS DRAWING CREATED ELECTRONICALLY

NON-SAFETY

LUMINANT
CPNPP
GLEN ROSE, TEXAS

FLOW DIAGRAM
VENTILATION
TURBINE BUILDING

DWG. NO. M1-0306 | SH. NO. - | REV. CP-30

FINAL PRINT

REF CKD CP-25 01-05-01

me979000.dgn M1-0306

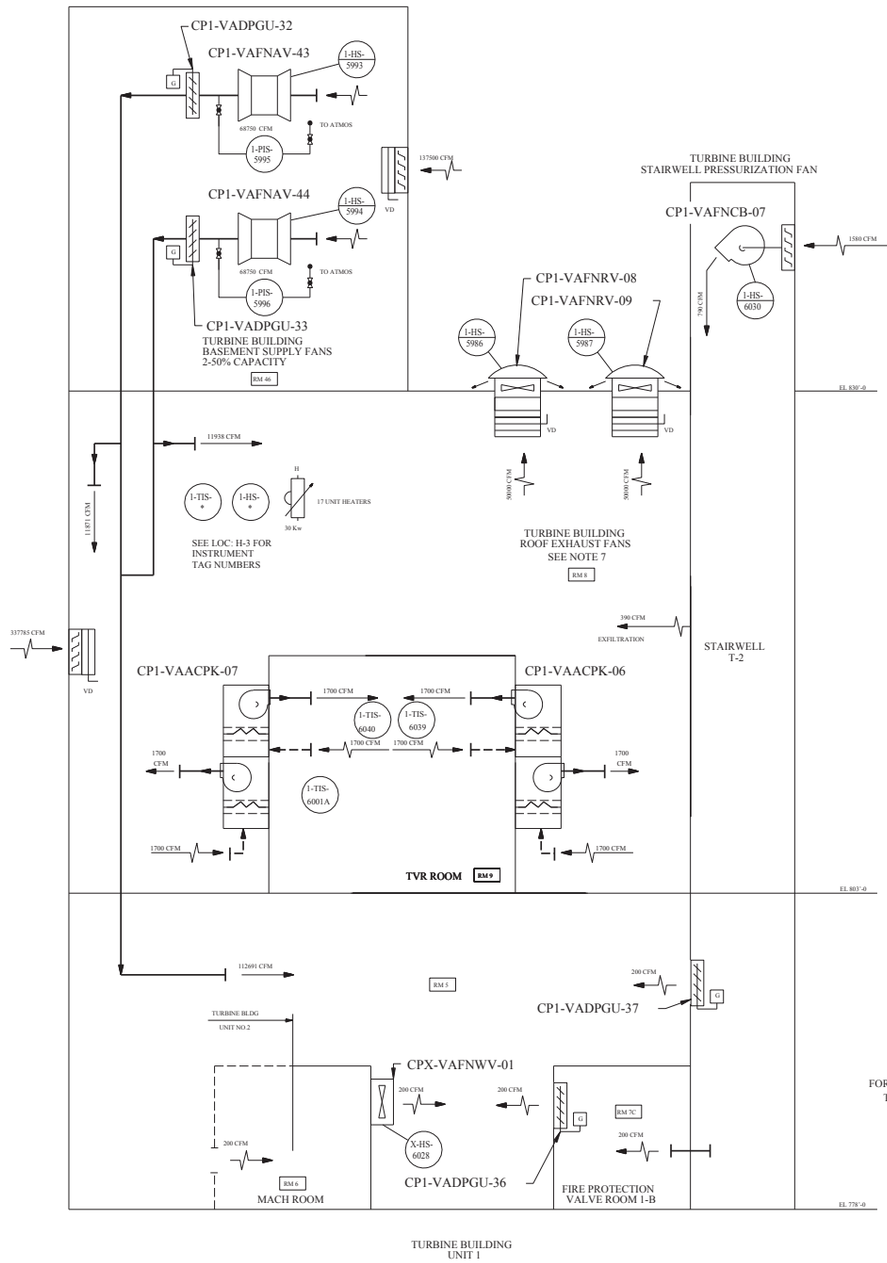

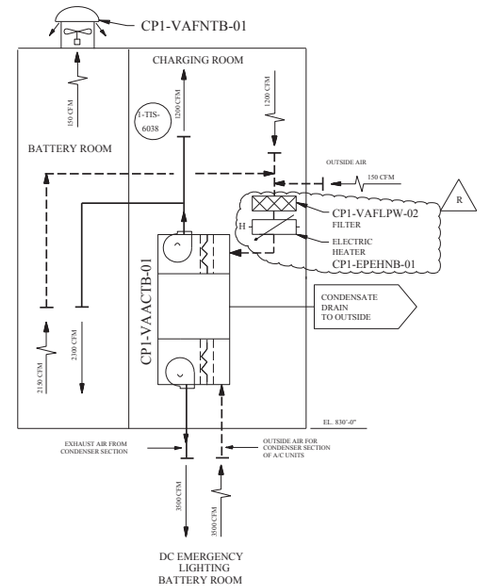

REV	DWN	CHK	APVD	REMARKS
CP-4	JRMC 03-31 2007	SM 03-31 2007		THIS DRAWING REVISED TO INCORPORATE DESIGN CHANGE FDA-2006-0035693-01-00 PER SK-0001-06-0035693-01-00.

NOTES:

1. FOR HVAC ABBREVIATIONS AND SYMBOLS SEE DWG M1-0313.
2. FOR I&C AND MECHANICAL SYMBOLS SEE DWG M1-0200.
3. THIS DIAGRAM IS A SCHEMATIC REPRESENTATION AND IS INTENDED TO SHOW GENERAL AIR DISTRIBUTION AND FLOW PLANS.
4. BALANCING DAMPERS, REGISTERS, DIFFUSERS, FLEXIBLE CONNECTIONS AND ALL OTHER RELATED ACCESSORIES NOT SHOWN ON THIS DIAGRAM SHALL BE PROVIDED AS INDICATED ON THE HVAC ARRANGEMENT DRAWING AND SPECIFICATION.
5. THE TURBINE BUILDING AND SWITCHGEAR AREA WILL BE MAINTAINED AT ATMOSPHERIC PRESSURE.
6. ALL ROOT VALVES FOR DIFFERENTIAL PRESSURE INDICATING SWITCHES SHOWN ON THIS DRAWING WILL BE SUPPLIED BY SPECIFICATION MS-85.
7. THERE ARE FOUR ROOF EXHAUST FANS: THREE ARE RUNNING AND ONE IS KEPT IN STANDBY.
8. AIR FLOW RATES SHOWN ARE ORIGINAL DESIGN VALUES FOR INITIAL FLOW BALANCING AND DO NOT REPRESENT AS-BUILT AIR FLOW IS BALANCED TO MAINTAIN ROOM TEMPERATURES WITHIN DESIGN DURING NORMAL OPERATION AND TO ENSURE THE DIRECTION OF AIR FLOW IS AS SHOWN.

REFERENCES:

1. M1-0313	FLOW DIAGRAM-VENTILATION AAP BLDG AND CONTROL BLDG UPS AREA A/C SYSTEMS
2. M1-0200	MECHANICAL SYMBOLS AND NOTES

UNIT HEATERS		
TAG NUMBER	1-HS-	1-TS-
CP1-VAEHUH-03	6010	6010
CP1-VAEHUH-04	6011	6011
CP1-VAEHUH-05	6012	6012
CP1-VAEHUH-06	6013	6013
CP1-VAEHUH-07	6014	6014
CP1-VAEHUH-08	6015	6015
CP1-VAEHUH-09	6016	6016
CP1-VAEHUH-10	6017	6017
CP1-VAEHUH-11	6018	6018
CP1-VAEHUH-12	6019	6019
CP1-VAEHUH-13	6020	6020
CP1-VAEHUH-14	6021	6021
CP1-VAEHUH-15	6022	6022
CP1-VAEHUH-16	6023	6023
CP1-VAEHUH-17	6024	6024
CP1-VAEHUH-18	6025	6025
CP1-VAEHUH-19	6026	6026

FSAR FIGURE 9.4-3

THIS DRAWING CREATED ELECTRONICALLY

DRAWING M1-0306 REV CP-18
HAS BEEN SPLIT INTO THE FOLLOWING SHEETS:

M1-0306
M1-0306-A

NON–SAFETY

LUMINANT
CPSES
GLEN ROSE, TEXAS

FLOW DIAGRAM
VENTILATION
TURBINE BUILDING

DWG. NO.	SH. NO.	REV.
M1-0306	A	CP-4

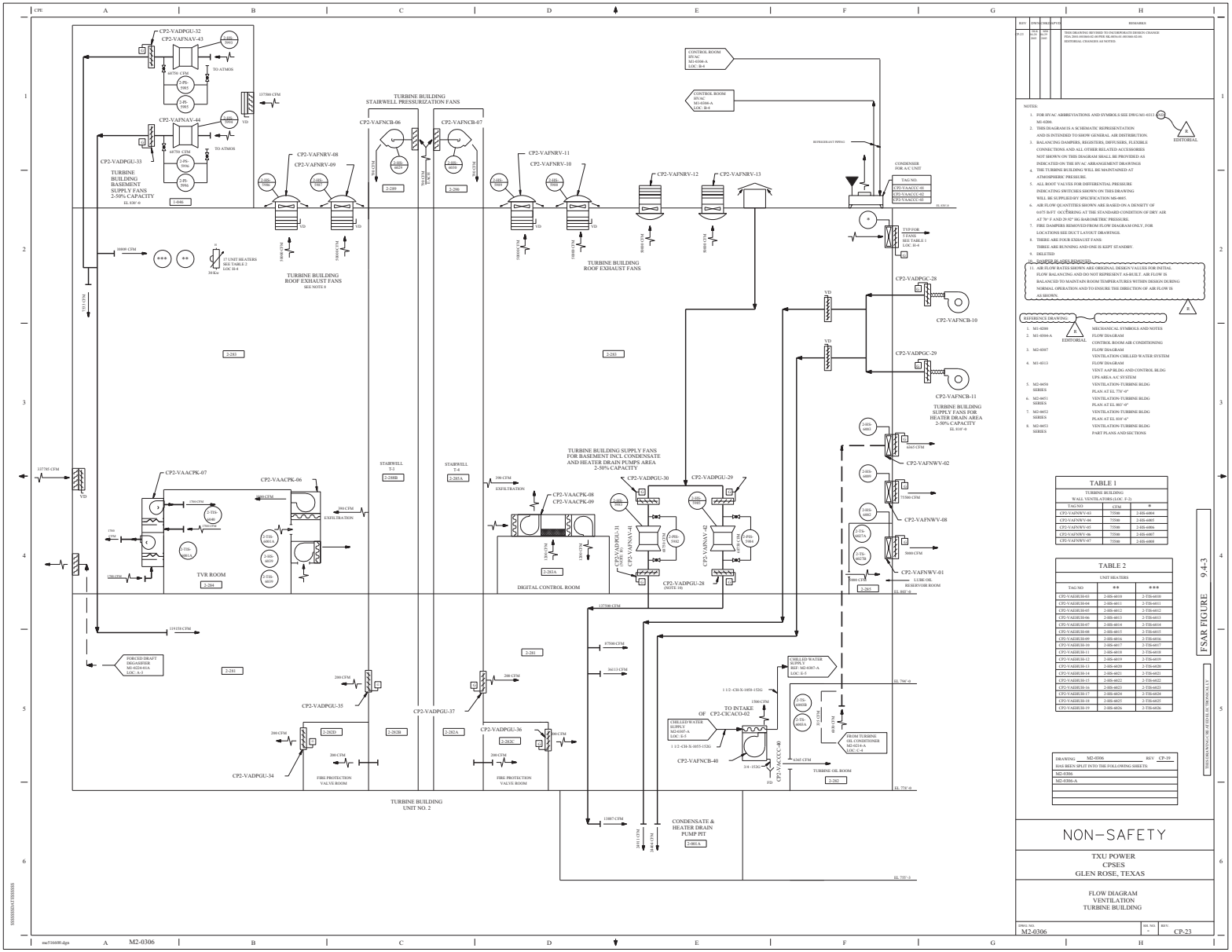
CP2-VADPGU-32
CP2-VAFNAV-43
TO ATMOS
68756 CFM
CP2-VAFNAV-44
CP2-VADPGU-33
TURBINE BUILDING BASEMENT SUPPLY FANS 2-50% CAPACITY
EL 830'-6
1-046
127500 CFM
TURBINE BUILDING STAIRWELL PRESSURIZATION FANS
CP2-VAFNCB-06
CP2-VAFNCB-07
2-289
2-286
CP2-VAFNRV-08
CP2-VAFNRV-09
CP2-VAFNRV-11
CP2-VAFNRV-10
CP2-VAFNRV-12
CP2-VAFNRV-13
TURBINE BUILDING ROOF EXHAUST FANS
SEE NOTE 8
TURBINE BUILDING ROOF EXHAUST FANS
CONTROL ROOM HVAC M1-0306-A LOC. B-4
CONTROL ROOM HVAC M1-0306-A LOC. B-4
REFRIGERANT PIPING
CONDENSER FOR A/C UNIT
TAG NO.
CP2-VAACOC-01
CP2-VAACOC-02
CP2-VAACOC-03
EL 830'-6
TVP FOR T-FANS SEE TABLE 1 LOC. H-4
CP2-VADPGC-28
CP2-VAFNCB-10
CP2-VADPGC-29
CP2-VAFNCB-11
TURBINE BUILDING SUPPLY FANS FOR HEATER DRAIN AREA 2-50% CAPACITY
EL 810'-0
16000 CFM
17 UNIT HEATERS SEE TABLE 2 LOC H-4
30 Kw
2-283
2-283
TURBINE BUILDING SUPPLY FANS FOR BASEMENT INCL CONDENSATE AND HEATER DRAIN PUMPS AREA 2-50% CAPACITY
CP2-VADPGU-30
CP2-VADPGU-29
CP2-VADPGU-31
CP2-VAFNAV-41
CP2-VAFNAV-42
CP2-VADPGU-28
(NOTE 10)
CP2-VAFNWV-02
CP2-VAFNWV-08
CP2-VAFNWV-01
CUBE OIL RESERVOIR ROOM
EL 805'-0
2-285
137705 CFM
CP2-VAACPK-07
CP2-VAACPK-06
CP2-VAACPK-08
CP2-VAACPK-09
TVR ROOM
2-284
DIGITAL CONTROL ROOM
2-283A
STAIRWELL T-3
2-288
STAIRWELL T-4
2-285A
EXFILTRATION
137500 CFM
87500 CFM
84113 CFM
CHILLED WATER SUPPLY REF: M2-0307-A LOC. E-5
EL 794'-0
CP2-VADPGU-35
CP2-VADPGU-37
CP2-VADPGU-36
CP2-VADPGU-34
2-282D
2-282B
2-282A
2-282C
FIRE PROTECTION VALVE ROOM
TO INTAKE OF CP2-CIACCO-02
CHILLED WATER SUPPLY M2-0307-A LOC. E-5
FROM TURBINE OIL CONDITIONER M2-0214-A LOC. C-4
CP2-VAFNCB-40
CP2-VACCC-40
TURBINE OIL ROOM
2-282
EL 770'-0
TURBINE BUILDING UNIT NO. 2
11887 CFM
CONDENSATE & HEATER DRAIN PUMP PIT
2-001A
EL 755'-3
NOTES:
1. FOR HVAC ABBREVIATIONS AND SYMBOLS SEE DWG M1-0311 AND M2-0200.
2. THIS DIAGRAM IS A SCHEMATIC REPRESENTATION AND IS INTENDED TO SHOW GENERAL AIR DISTRIBUTION.
3. BALANCING DAMPERS, REGISTERS, DIFFUSERS, FLEXIBLE CONNECTIONS AND ALL OTHER RELATED ACCESSORIES NOT SHOWN ON THIS DIAGRAM SHALL BE PROVIDED AS INDICATED ON THE HVAC ARRANGEMENT DRAWINGS
4. THE TURBINE BUILDING WILL BE MAINTAINED AT ATMOSPHERIC PRESSURE.
5. ALL ROOT VALVES FOR DIFFERENTIAL PRESSURE INDICATING SWITCHES SHOWN ON THIS DRAWING WILL BE SUPPLIED BY SPECIFICATION M6-0003.
6. AIR FLOW QUANTITIES SHOWN ARE BASED ON A DENSITY OF 0.075 lb/FT OCCURRING AT THE STANDARD CONDITION OF DRY AIR AT 70° F AND 29.92" HG BAROMETRIC PRESSURE.
7. FIRE DAMPERS REMOVED FROM FLOW DIAGRAM ONLY. FOR LOCATIONS SEE DUCT LAYOUT DRAWINGS.
8. THERE ARE FOUR EXHAUST FANS THREE ARE RUNNING AND ONE IS EQPT STANDBY.
9. DELETED
10. DAMPER IS ASS'D W/FAN
11. AIR FLOW RATES SHOWN ARE ORIGINAL DESIGN VALUES FOR INITIAL FLOW BALANCING AND DO NOT REPRESENT AS-BUILT. AIR FLOW IS BALANCED TO MAINTAIN ROOM TEMPERATURES WITHIN DESIGN DURING NORMAL OPERATION AND TO ENSURE THE DIRECTION OF AIR FLOW IS AS SHOWN.
EDITORIAL
REFERENCE DRAWING
1. M1-0200 MECHANICAL SYMBOLS AND NOTES
2. M1-0306-A FLOW DIAGRAM CONTROL ROOM AIR CONDITIONING
3. M2-0307 FLOW DIAGRAM VENTILATION CHILLED WATER SYSTEM
4. M1-0313 FLOW DIAGRAM VENT AAP BLDG AND CONTROL BLDG UPS AREA A/C SYSTEM
5. M2-0450 SERIES VENTILATION-TURBINE BLDG PLAN AT EL 774'-6"
6. M2-0451 SERIES VENTILATION-TURBINE BLDG PLAN AT EL 803'-0"
7. M2-0452 SERIES VENTILATION-TURBINE BLDG PLAN AT EL 819'-6"
8. M2-0453 SERIES VENTILATION-TURBINE BLDG PART PLANS AND SECTIONS
TABLE 1
TURBINE BUILDING WALL VENTILATORS (LOC. F-2)
TAG NO | CFM | *
CP2-VAFNWV-01 | 75500 | 2-HS-6004
CP2-VAFNWV-08 | 75500 | 2-HS-6005
CP2-VAFNWV-02 | 75500 | 2-HS-6006
CP2-VAFNWV-06 | 75500 | 2-HS-6007
CP2-VAFNWV-07 | 75500 | 2-HS-6008
TABLE 2
UNIT HEATERS
TAG NO | ** | ***
CP2-VAEHUH-01 | 2-HS-6010 | 2-TH-6010
CP2-VAEHUH-04 | 2-HS-6011 | 2-TH-6011
CP2-VAEHUH-05 | 2-HS-6012 | 2-TH-6012
CP2-VAEHUH-06 | 2-HS-6013 | 2-TH-6013
CP2-VAEHUH-07 | 2-HS-6014 | 2-TH-6014
CP2-VAEHUH-08 | 2-HS-6015 | 2-TH-6015
CP2-VAEHUH-09 | 2-HS-6016 | 2-TH-6016
CP2-VAEHUH-10 | 2-HS-6017 | 2-TH-6017
CP2-VAEHUH-11 | 2-HS-6018 | 2-TH-6018
CP2-VAEHUH-12 | 2-HS-6019 | 2-TH-6019
CP2-VAEHUH-13 | 2-HS-6020 | 2-TH-6020
CP2-VAEHUH-14 | 2-HS-6021 | 2-TH-6021
CP2-VAEHUH-15 | 2-HS-6022 | 2-TH-6022
CP2-VAEHUH-16 | 2-HS-6023 | 2-TH-6023
CP2-VAEHUH-17 | 2-HS-6024 | 2-TH-6024
CP2-VAEHUH-18 | 2-HS-6025 | 2-TH-6025
CP2-VAEHUH-19 | 2-HS-6026 | 2-TH-6026
DRAWING M2-0306 REV CP-19 HAS BEEN SPLIT INTO THE FOLLOWING SHEETS:
M2-0306
M2-0306-A
NON-SAFETY
TXU POWER
CPSES
GLEN ROSE, TEXAS
FLOW DIAGRAM
VENTILATION
TURBINE BUILDING
DWG. NO. M2-0306
REV. CP-23
FSAR FIGURE 9.4-3
THIS DRAWING CAN BE REVISED ELECTRONICALLY

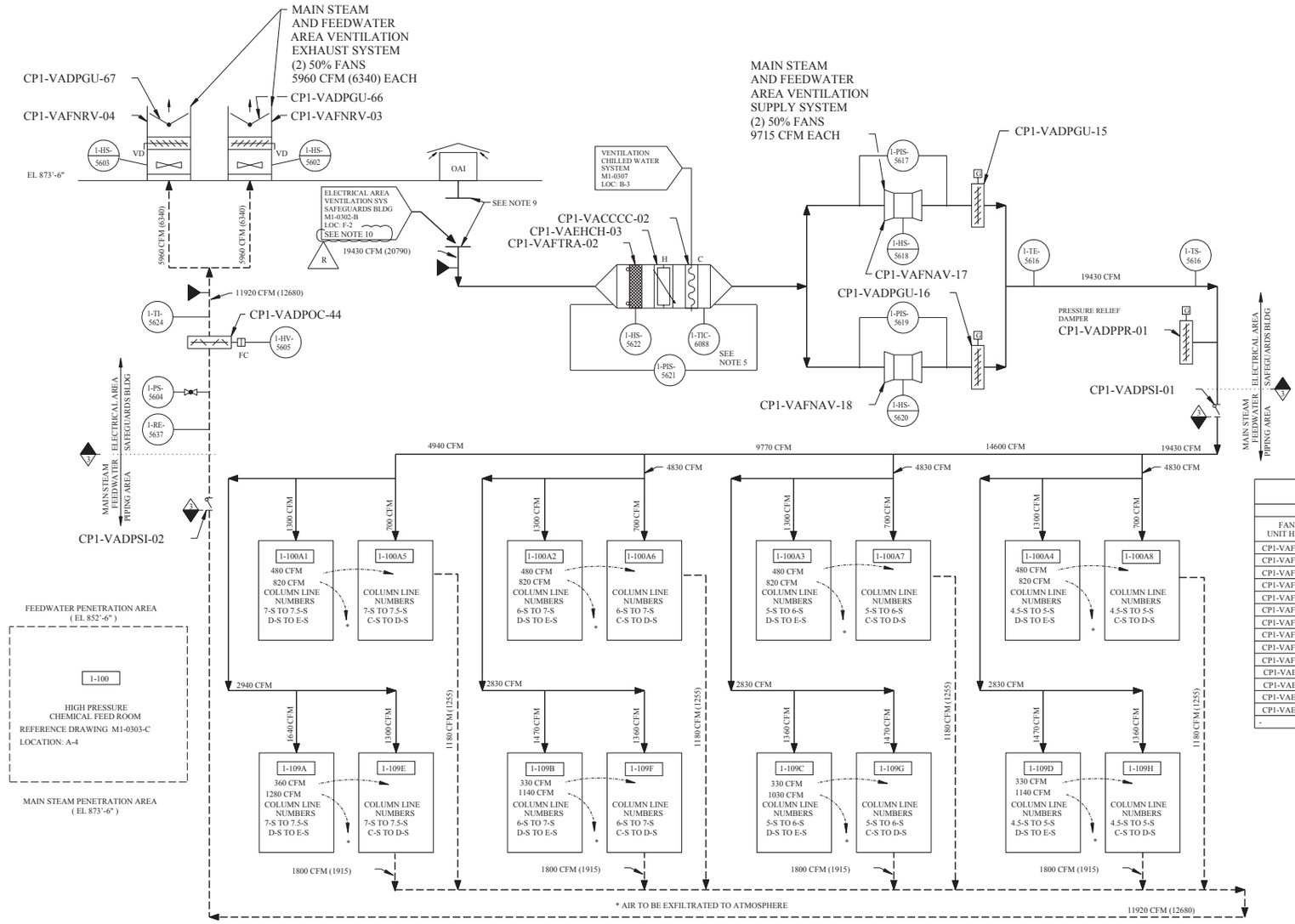

MAIN STEAM AND FEEDWATER AREA VENTILATION SYSTEM
NON-NUCLEAR SAFETY (EXCEPT AS NOTED)

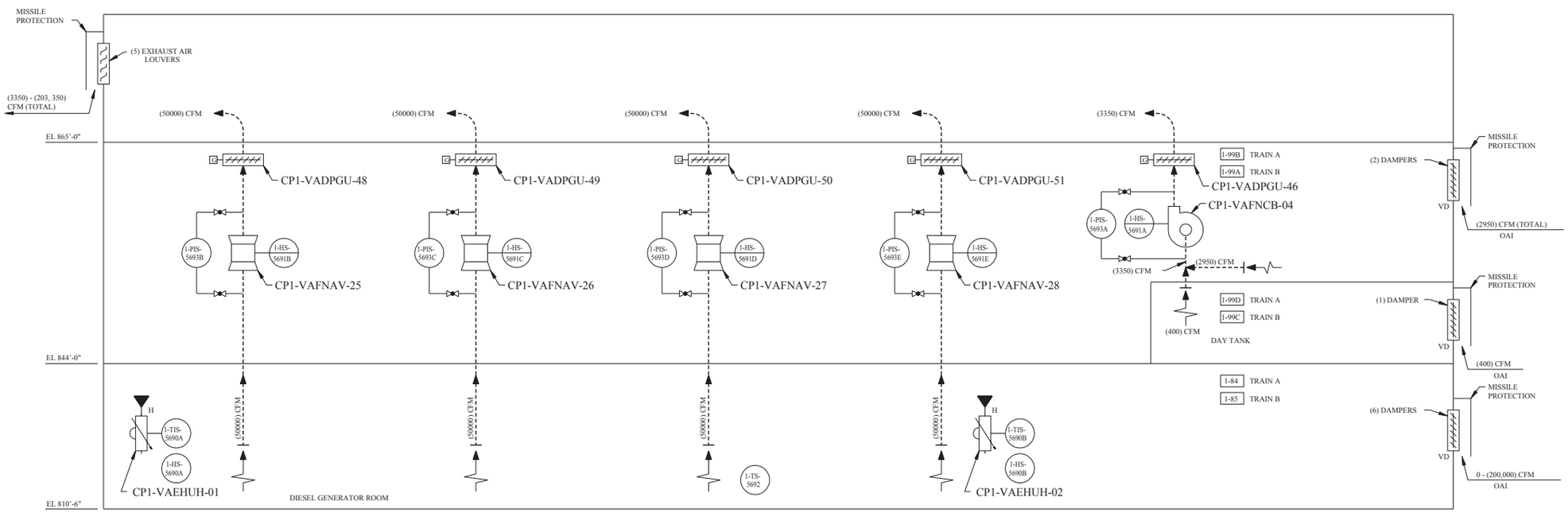

DIESEL GENERATOR AREA VENTILATION SYSTEM
SAFETY CLASS 3 (EXCEPT AS NOTED)
(TAG NUMBERS FOR TRAIN A SHOWN - SEE TABLE FOR CORRESPONDING TRAIN B TAG NUMBERS)

DIESEL GENERATOR AREA TRAIN A			DIESEL GENERATOR AREA TRAIN B		
TAG NUMBER			TAG NUMBER		
FAN AND UNIT HEATER	DAMPER	I/C NUMBER	FAN AND UNIT HEATER	DAMPER	I/C NUMBER
CP1-VAFNCB-04	CP1-VADPGU-46	1-HS-5691A	CP1-VAFNCB-05	CP1-VADPGU-47	1-HS-5695A
CP1-VAFNCB-04	CP1-VADPGU-46	1-PIS-5693A	CP1-VAFNCB-05	CP1-VADPGU-47	1-PIS-5697A
CP1-VAFNAV-25	CP1-VADPGU-48	1-HS-5691B	CP1-VAFNAV-29	CP1-VADPGU-52	1-HS-5695B
CP1-VAFNAV-25	CP1-VADPGU-48	1-PIS-5693B	CP1-VAFNAV-29	CP1-VADPGU-52	1-PIS-5697B
CP1-VAFNAV-26	CP1-VADPGU-49	1-HS-5691C	CP1-VAFNAV-30	CP1-VADPGU-53	1-HS-5695C
CP1-VAFNAV-26	CP1-VADPGU-49	1-PIS-5693C	CP1-VAFNAV-30	CP1-VADPGU-53	1-PIS-5697C
CP1-VAFNAV-27	CP1-VADPGU-50	1-HS-5691D	CP1-VAFNAV-31	CP1-VADPGU-54	1-HS-5695D
CP1-VAFNAV-27	CP1-VADPGU-50	1-PIS-5693D	CP1-VAFNAV-31	CP1-VADPGU-54	1-PIS-5697D
CP1-VAFNAV-28	CP1-VADPGU-51	1-HS-5691E	CP1-VAFNAV-32	CP1-VADPGU-55	1-HS-5695E
CP1-VAFNAV-28	CP1-VADPGU-51	1-PIS-5693E	CP1-VAFNAV-32	CP1-VADPGU-55	1-PIS-5697E
CP1-VAEHUH-01	-	1-HS-5690A	CP1-VAEHUH-23	-	1-HS-5694A
CP1-VAEHUH-01	-	1-TIS-5690A	CP1-VAEHUH-23	-	1-TIS-5694A
CP1-VAEHUH-02	-	1-HS-5690B	CP1-VAEHUH-24	-	1-HS-5694B
CP1-VAEHUH-02	-	1-TIS-5690B	CP1-VAEHUH-24	-	1-TIS-5694B
- -	-	1-TS-5692	-	-	1-TS-5696

REV	DWN	CHK	APVD	REMARKS
CP-22	Mdf 01-17 2006	Mfff 01-17 2006		THIS DRAWING REVISED TO INCORPORATE DESIGN CHANGE FDA-1999-003133-01-04 PER SK-0083-99-003133-01-00.

NOTES:

1. FOR ABBREVIATIONS AND SYMBOLS SEE DRAWINGS M1-0313 AND M1-0200.
2. THIS DIAGRAM IS A SCHEMATIC REPRESENTATION AND IS INTENDED TO SHOW GENERAL AIR DISTRIBUTION AND FLOW PATHS.
3. BALANCING DAMPERS, REGISTERS, DIFFUSERS, FLEXIBLE CONNECTIONS AND ALL OTHER RELATED ACCESSORIES NOT SHOWN ON THIS DIAGRAM SHALL BE PROVIDED AS INDICATED ON THE HVAC ARRANGEMENT DRAWINGS AND SPECIFICATIONS.
4. INSTRUMENTATION AND CONTROLS FOR ROOM COOLING UNITS ARE TO BE SUPPLIED BY EQUIPMENT MANUFACTURERS.
5. FOR LOGIC CHANNELS 1-TIC-6087 AND 1-TIC-6088 , SEE ICD M1-2307-06.
6. 750 CFM INTERMITTENTLY FROM EACH SAMPLE PANEL MODULE.
7. AIR FLOW QUANTITIES SHOWN ARE BASED ON A DENSITY OF 0.075 LB/FT³ OCCURING AT THE STANDARD CONDITION OF DRY AIR AT 70°F AND 29.92" HG BAROMETRIC PRESSURE. QUANTITIES IN PARENTHESES ARE ACTUAL AIR FLOW RATES BASED ON DENSITY AT DESIGN CONDITIONS.
8. FOR THE NON-SAFETY VENTILATION SYSTEM, THE AIR FLOW RATES SHOWN ARE ORIGINAL DESIGN VALUES FOR INITIAL FLOW BALANCING AND DO NOT REPRESENT AS-BUILT. AIR FLOW IS BALANCED TO MAINTAIN ROOM TEMPERATURES WITHIN DESIGN DURING NORMAL OPERATION AND TO ENSURE THE DIRECTION OF AIR FLOW IS AS SHOWN.
9. WIRE MESH GRILLE IS INSTALLED OVER THE DUCT FLANGE AT THE CEILING. A SUPPLY DUCT ELBOW WITH WIRE MESH GRILLE IS INSTALLED ON THE TOP OF THE AHU.
10. THE S-5 STAIRWELL (ROOMS 085C, 096B AND 105B) IS PART OF THE NORMAL EAVS EXHAUST AIR FLOW PATH FROM THE MAJOR EQUIPMENT ROOMS TO THE HVAC EQUIPMENT ROOM 104 PER DBD-ME-302B AND DBD-ME-302C.

R

REFERENCES:

1.	M1-0313	FLOW DIAGRAM VENTILATION AAP BLDG AND CONTROL BLDG UPS AREA A/C SYSTEMS
2.	M1-0200	MECHANICAL SYMBOLS AND NOTES
3.	M1-0307	FLOW DIAGRAM VENTILATION CHILLED WATER SYSTEM
4.	M1-0302-A	FLOW DIAGRAM VENTILATION SAFEGUARDS AND ELECTRICAL AREA
5.	M1-0302-B	FLOW DIAGRAM VENTILATION SAFEGUARDS AND ELECTRICAL AREA
6.	M1-0303-C	FLOW DIAGRAM VENTILATION AUXILIARY BUILDING

DRAWING M1-0302 REV CP-9
HAS BEEN SPLIT INTO THE FOLLOWING SHEETS:
M1-0302
M1-0302-B

DRAWING M1-0302 REV CP-8
HAS BEEN SPLIT INTO THE FOLLOWING SHEETS:
M1-0302
M1-0302-A

FSAR FIGURE 9.4-4

THIS DRAWING CREATED ELECTRONICALLY

LUMINANT
CPSES
GLEN ROSE, TEXAS

FLOW DIAGRAM - VENTILATION
SAFEGUARDS AND ELECTRICAL AREA

DWG. NO. M1-0302 | SH. NO. - | REV. CP-22

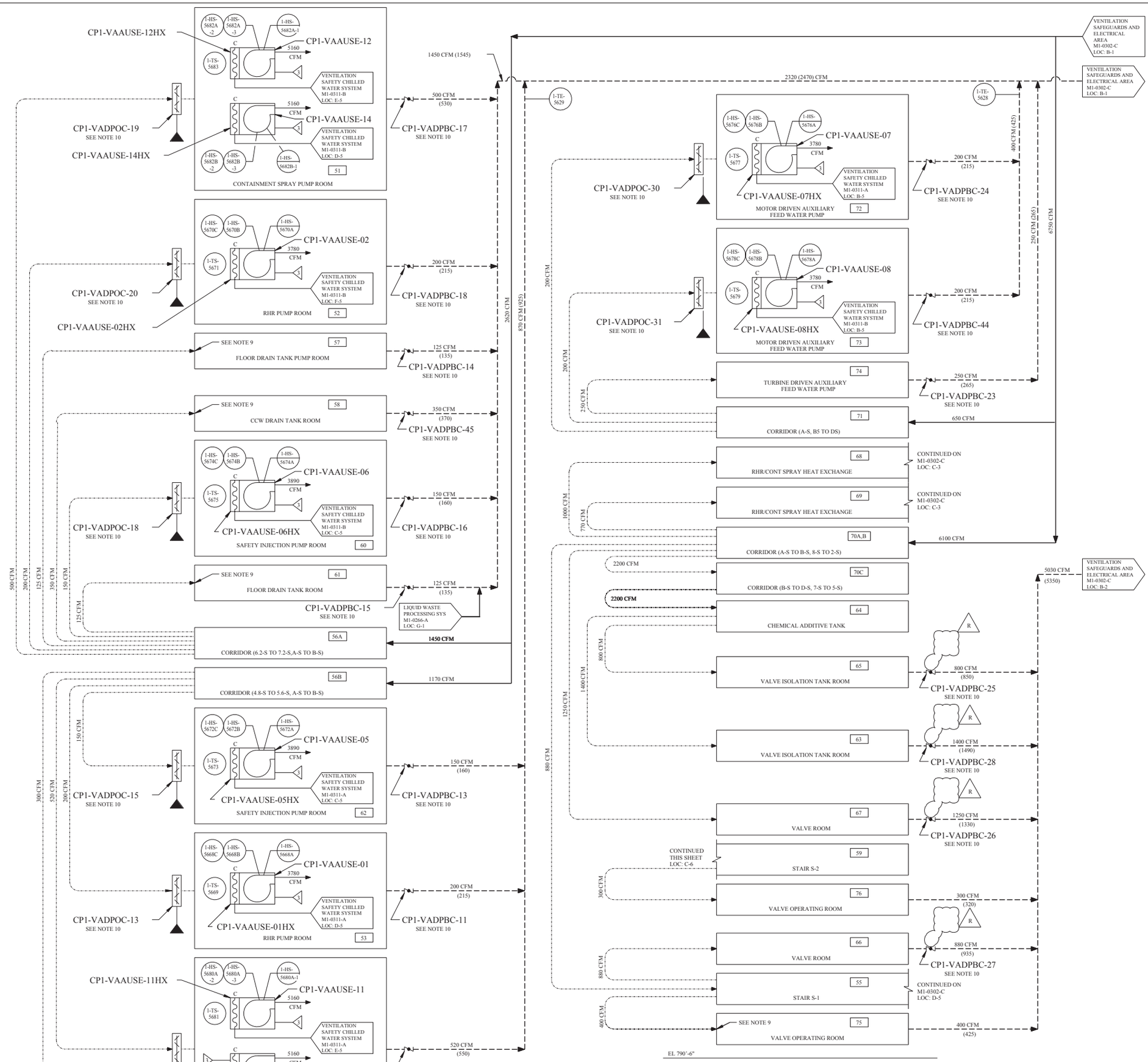

SAFEGUARDS BUILDING VENTILATION SYSTEM
NON-SAFETY (EXCEPT AS NOTED)

REV	DWN	CHK	APVD	REMARKS
CP-13	DLK 07-11-2005	MM 07-12-2005		THIS DRAWING REVISED TO INCORPORATE DESIGN CHANGE FDA 2005-002581-01-00 PER SK-0005-05-002581-01-00.

NOTES:

1. FOR ABBREVIATIONS AND SYMBOLS SEE DRAWINGS M1-0313 AND M1-0200.
2. AIR FLOW QUANTITIES SHOWN ARE BASED ON A DENSITY OF 0. 075 LB/FT OCCURING AT THE STANDARD CONDITION OF DRY AIR AT 70°F AND 29.92" HG BAROMETRIC PRESSURE. QUANTITIES IN PARENTHESES AND ON DISCHARGE OF SAFETY RELATED FAN COIL UNITS ARE ACTUAL AIR FLOW RATES BASED ON DENSITY AT DESIGN CONDITIONS.
3. THIS DIAGRAM IS A SCHEMATIC REPRESENTATION AND IS INTENDED TO SHOW GENERAL AIR DISTRIBUTION AND FLOW PATHS.
4. BALANCING DAMPERS, REGISTERS, DIFFUSERS, FLEXIBLE CONNECTIONS AND ALL OTHER RELATED ACCESSORIES NOT SHOWN ON THIS DIAGRAM SHALL BE PROVIDED AS INDICATED ON THE HVAC ARRANGEMENT DRAWINGS AND SPECIFICATIONS.
5. INSTRUMENTATION AND CONTROLS FOR ROOM COOLING UNITS ARE TO BE SUPPLIED BY EQUIPMENT MANUFACTURERS.
6. THE SAFEGUARD BUILDING WILL BE MAINTAINED AT SLIGHT NEGATIVE PRESSURE.
7. FOR LOGIC CELLS 1-TIC-6087 AND 1-TIC-6088 SEE ICD-M1-2307-06.
8. 750 CFM INTERMITTENTLY FROM EACH SAMPLE PANEL MODULE.
9. AIR INTAKE FOR THE INDICATED ROOMS IS THROUGH DOORWAY. DOORS ARE OPEN FOR TORNADO VENTING PURPOSES.
10. DAMPER ABANDONED IN PLACE (IN OPEN POSITION), ALL AIR CONNECTIONS AND ELECTRICAL CONNECTIONS ARE DISCONNECTED.
11. FOR THE NON-SAFETY VENTILATION SYSTEMS, THE AIR FLOW RATES SHOWN ARE ORIGINAL DESIGN VALUES FOR INITIAL FLOW BALANCING AND DO NOT REPRESENT AS-BUILT. AIR FLOW IS BALANCED TO MAINTAIN ROOM TEMPERATURES WITHIN DESIGN DURING NORMAL OPERATION AND TO ENSURE THE DIRECTION OF AIR FLOW IS AS SHOWN.

REFERENCES:

M1-0313	FLOW DIAGRAM VENTILATION AAP BLDG AND CONTROL BLDG UPS AREA A/C SYSTEMS
M1-0200	MECHANICAL SYMBOLS AND NOTES
M1-0302-C	FLOW DIAGRAM VENTILATION SAFEGUARDS AND ELECTRICAL AREA
M1-0311-A	FLOW DIAGRAM VENTILATION SAFETY CHILLED WATER SYSTEM
M1-0311-B	FLOW DIAGRAM VENTILATION SAFETY CHILLED WATER SYSTEM
M1-0260	FLOW DIAGRAM LIQUID WASTE PROCESSING SYSTEM

FSAR FIGURE 9.4-4

THIS DRAWING CREATED ELECTRONICALLY

DRAWING M1-0302-A REV CP-1
HAS BEEN SPLIT INTO THE FOLLOWING SHEETS:
M1-0302-A
M1-0302-C

CLASS I
(NUCLEAR SAFETY-RELATED)
SAFETY CLASS 1 SEISMIC CATEGORY I
SAFETY CLASS 2 CLASS 1E
SAFETY CLASS 3 ASSOCIATED CIRCUITS

LUMINANT
CPSES
GLEN ROSE, TEXAS

FLOW DIAGRAM-VENTILATION
SAFEGUARDS AND ELECTRICAL AREA

DWG. NO. M1-0302 | SH. NO. A | REV. CP-13

ELECTRICAL AREA VENTILATION SYSTEM
SAFETY CLASS 3 (EXCEPT AS NOTED)

REV	DWN	CHKD	APVD	REMARKS
CP-17	MM 01-17 2006	MH 01-17 2006		THIS DRAWING REVISED TO INCORPORATE DESIGN CHANGE FDA-1999-003133-01-04 PER SK-0084-99-003133-01-00.

NOTES:

1. FOR ABBREVIATIONS AND SYMBOLS SEE DRAWINGS M1-0313 AND M1-0200.
2. DELETED
3. THIS DIAGRAM IS A SCHEMATIC REPRESENTATION AND IS INTENDED TO SHOW GENERAL AIR DISTRIBUTION AND FLOW PATHS.
4. BALANCING DAMPERS, REGISTERS, DIFFUSERS, FLEXIBLE CONNECTIONS AND ALL OTHER RELATED ACCESSORIES NOT SHOWN ON THIS DIAGRAM SHALL BE PROVIDED AS INDICATED ON THE HVAC ARRANGEMENT DRAWINGS AND SPECIFICATIONS.
5. INSTRUMENTATION AND CONTROLS FOR ROOM COOLING UNITS ARE TO BE SUPPLIED BY EQUIPMENT MANUFACTURERS.
6. AIR FLOW QUANTITIES SHOWN ARE BASED ON A DENSITY OF 0. 075 LB/FT OCCURRING AT THE STANDARD CONDITION OF DRY AIR AT 70°F AND 29.92" HG BAROMETRIC PRESSURE. QUANTITIES IN PARENTHESES AND ON DISCHARGE OF SAFETY RELATED FAN COIL UNITS ARE ACTUAL AIR FLOW RATES BASED ON DENSITY AT DESIGN CONDITIONS.
7. FOR LOGIC CHANNELS 1-TIC-6087 AND 1-TIC-6088 , SEE ICD M1-2307-06 AND M1-0307-C.
8. 750 CFM INTERMITTENTLY FROM EACH SAMPLE PANEL MODULE.
9. FOR THE NON-SAFETY VENTILATION SYSTEMS, THE AIR FLOW RATES SHOWN ARE ORIGINAL DESIGN VALUES FOR INITIAL FLOW BALANCING AND DO NOT REPRESENT AS-BUILT. AIR FLOW IS BALANCED TO MAINTAIN ROOM TEMPERATURES WITHIN DESIGN DURING NORMAL OPERATION AND TO ENSURE THE DIRECTION OF AIR FLOW IS AS SHOWN.
10. THE SAFEGUARDS BUILDING ELECTRICAL AREA MUST BE MAINTAINED AT A SLIGHTLY POSITIVE PRESSURE.
11. THE S-5 STAIRWELL (ROOMS 085C, 096B AND 105B) IS PART OF THE NORMAL EAVS EXHAUST AIR FLOW PATH FROM THE MAJOR EQUIPMENT ROOMS TO THE HVAC EQUIPMENT ROOM 104 PER DBD-ME-302B AND DBD-ME-302C. R

REFERENCES:

M1-0313	FLOW DIAGRAM VENTILATION AAP BLDG AND CONTROL BLDG UPS AREA A/C SYSTEMS
M1-0200	MECHANICAL SYMBOLS AND NOTES
M1-0307	FLOW DIAGRAM VENTILATION CHILLED WATER SYSTEM
M1-0311-A	FLOW DIAGRAM VENTILATION SAFETY CHILLED WATER SYSTEM
M1-0311-B	FLOW DIAGRAM VENTILATION SAFETY CHILLED WATER SYSTEM

FSAR FIGURE 9.4-4

THIS DRAWING CREATED ELECTRONICALLY

DRAWING M1-0302 REV CP-9
HAS BEEN SPLIT INTO THE FOLLOWING SHEETS:
M1-0302
M1-0302-B

CLASS I
(NUCLEAR SAFETY-RELATED)
SAFETY CLASS 1 SEISMIC CATEGORY I
SAFETY CLASS 2 CLASS 1E
SAFETY CLASS 3 ASSOCIATED CIRCUITS

LUMINANT
CPSES
GLEN ROSE, TEXAS

FLOW DIAGRAM - VENTILATION
SAFEGUARDS AND ELECTRICAL AREA

DWG. NO. M1-0302 | SH. NO. B | REV. CP-17

FINAL PRINT

REF CKD CP-13 2/16/98

me668100.dgn M1-0302-B

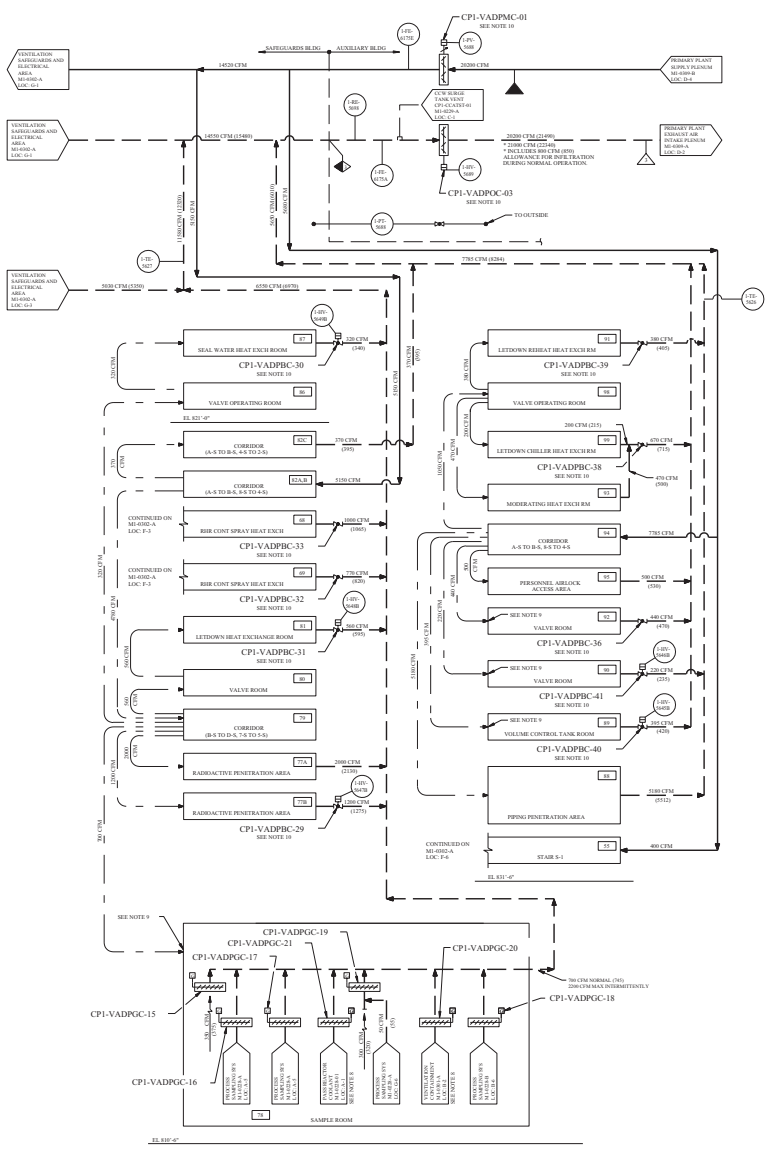

REV	DWN	CHKD	APP'D	REMARKS
CP-8	MAA 7/2/07	MRC 7/2/07		THIS DRAWING REVISED TO INCORPORATE DESIGN CHANGE 5DA-2001-00034413.00 PER SK-5DAE-01-00034413.00.

NOTES:

1. FOR ABBREVIATIONS AND SYMBOLS SEE DRAWINGS M1-0311 AND M1-0200.
2. AIR FLOW QUANTITIES SHOWN ARE BASED ON A DENSITY OF 0.073 LB/FT CUBIC/FT AT THE STANDARD CONDITION OF DRY AIR AT 70°F AND 29.92" HG BAROMETRIC PRESSURE. QUANTITIES IN PARENTHESES ARE ACTUAL AIR FLOW RATES BASED ON DENSITY AT DESIGN CONDITIONS.
3. **THIS DIAGRAM IS A SCHEMATIC REPRESENTATION AND IS INTENDED TO SHOW GENERAL AIR DISTRIBUTION AND FLOW PATHS.**
4. BALANCING DAMPERS, REGISTERS, DIFFUSERS, FLEXIBLE CONNECTIONS AND ALL OTHER RELATED ACCESSORIES NOT SHOWN ON THIS DIAGRAM SHALL BE PROVIDED AS INDICATED ON THE HVAC ARRANGEMENT DRAWINGS AND SPECIFICATIONS.
5. **INSTRUMENTATION AND CONTROLS FOR ROOM COOLING UNITS ARE TO BE SUPPLIED BY EQUIPMENT MANUFACTURERS.**
6. **THE SAFEGUARD BUILDING WILL BE MAINTAINED AT SLIGHT NEGATIVE PRESSURE.**
7. **FOR LOGIC CELLS** 1-TIC-6087 **AND** 1-TIC-6088 **SEE ICD-M1-2307-06.**
8. **750 CFM INTERMITTENTLY FROM EACH SAMPLE PANEL MODULE.**
9. AIR INTAKE FOR THE INDICATED ROOMS IS THROUGH DOORWAY. DOORS ARE OPEN FOR TORNADO VENTING PURPOSES.
10. DAMPER ABANDONED IN PLACE (IN OPEN POSITION), ALL AIR CONNECTIONS AND ELECTRICAL CONNECTIONS ARE DISCONNECTED.
11. THE AIR FLOW RATES SHOWN ARE ORIGINAL DESIGN VALUES FOR INITIAL FLOW BALANCING AND DO NOT REPRESENT AS-BUILT. AIR FLOW IS BALANCED TO MAINTAIN ROOM TEMPERATURES WITHIN DESIGN DURING NORMAL OPERATION AND TO ENSURE THE DIRECTION OF AIR FLOW IS AS SHOWN.

A

REFERENCES:

M1-0313	FLOW DIAGRAM VENTILATION A/P BLDG AND CONTROL BLDG UPS AREA A/C SYSTEM
M1-0200	MECHANICAL SYMBOLS AND NOTES
M1-0228	FLOW DIAGRAM PROCESS SAMPLING SYSTEM
M1-0228-01	FLOW DIAGRAM POST ACCIDENT SAMPLING SYSTEM REACTOR COOLANT
M1-0301-A	FLOW DIAGRAM VENTILATION CONTAINMENT
M1-0302-A	FLOW DIAGRAM VENTILATION SAFEGUARD AND ELECTRICAL AREA
M1-0309-A	FLOW DIAGRAM VENTILATION PRIMARY PLANT SUPPLY AND EXHAUST
M1-0309-B	FLOW DIAGRAM VENTILATION PRIMARY PLANT SUPPLY AND EXHAUST

FSAR FIGURE 9.4-4

DRAWING M1-0302-A REV CP-1
HAS BEEN SPLIT INTO THE FOLLOWING SHEETS:
M1-0302-A
M1-0302-C

CLASS I
(NUCLEAR SAFETY-RELATED)
SAFETY CLASS 1 SEISMIC CATEGORY I
SAFETY CLASS 2 CLASS 1E
SAFETY CLASS 3 ASSOCIATED CIRCUITS

TXU POWER
CPSES
GLEN ROSE, TEXAS

FLOW DIAGRAM - VENTILATION
SAFEGUARDS AND ELECTRICAL AREA

DWG. NO.	SH. NO.	REV.
M1-0302	C	CP-8

DESIGN WINDOW - RESTRICTED TO PROPRIETARY

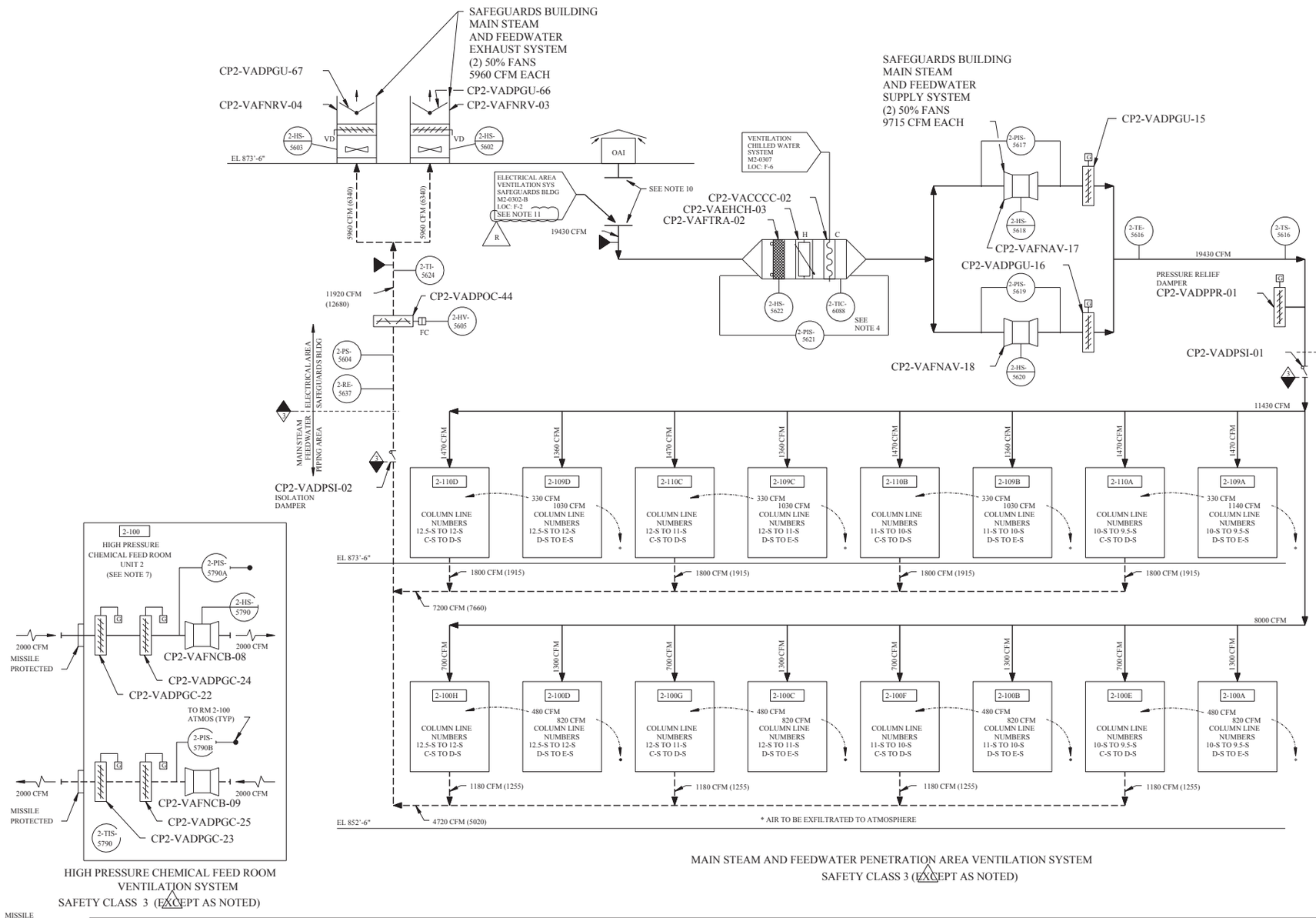

HIGH PRESSURE CHEMICAL FEED ROOM
VENTILATION SYSTEM
SAFETY CLASS 3 (EXCEPT AS NOTED)

MAIN STEAM AND FEEDWATER PENETRATION AREA VENTILATION SYSTEM
SAFETY CLASS 3 (EXCEPT AS NOTED)

DIESEL GENERATOR AREA TRAIN A		
TAG NUMBER		
FAN AND UNIT HEATER	DAMPER	I/C NUMBER
CP2-VAFNCB-04	CP2-VADPGU-46	2-HS-5691A-1
CP2-VAFNCB-04	CP2-VADPGU-46	2-PIS-5693A
CP2-VAFNAV-25	CP2-VADPGU-48	2-HS-5691B-1
CP2-VAFNAV-25	CP2-VADPGU-48	2-PIS-5693B
CP2-VAFNAV-26	CP2-VADPGU-49	2-HS-5691C-1
CP2-VAFNAV-26	CP2-VADPGU-49	2-PIS-5693C
CP2-VAFNAV-27	CP2-VADPGU-50	2-HS-5691D-1
CP2-VAFNAV-27	CP2-VADPGU-50	2-PIS-5693D
CP2-VAFNAV-28	CP2-VADPGU-51	2-HS-5691E-1
CP2-VAFNAV-28	CP2-VADPGU-51	2-PIS-5693E
CP2-VAEHUH-01	-	2-HS-5690A
CP2-VAEHUH-01	-	2-TS-5690A
* CP2-VAEHUH-02	-	2-HS-5690B
* CP2-VAEHUH-02	-	2-TS-5690B
-	-	2-TS-5692
CP2-VAEHAC-01	-	2-HS-5791A
CP2-VAEHAC-01	-	2-TS-5791A

* SEE NOTE 8

DIESEL GENERATOR AREA TRAIN B		
TAG NUMBER		
FAN AND UNIT HEATER	DAMPER	I/C NUMBER
CP2-VAFNCB-05	CP2-VADPGU-47	2-HS-5695A
CP2-VAFNCB-05	CP2-VADPGU-47	2-PIS-5697A
CP2-VAFNAV-29	CP2-VADPGU-52	2-HS-5695B
CP2-VAFNAV-29	CP2-VADPGU-52	2-PIS-5697B
CP2-VAFNAV-30	CP2-VADPGU-53	2-HS-5695C
CP2-VAFNAV-30	CP2-VADPGU-53	2-PIS-5697C
CP2-VAFNAV-31	CP2-VADPGU-54	2-HS-5695D
CP2-VAFNAV-31	CP2-VADPGU-54	2-PIS-5697D
CP2-VAFNAV-32	CP2-VADPGU-55	2-HS-5695E
CP2-VAFNAV-32	CP2-VADPGU-55	2-PIS-5697E
* CP2-VAEHUH-23	-	2-HS-5694A
* CP2-VAEHUH-23	-	2-TS-5694A
CP2-VAEHUH-24	-	2-HS-5694B
CP2-VAEHUH-24	-	2-TS-5694B
-	-	2-TS-5696
CP2-VAEHAC-02	-	2-HS-5791B
CP2-VAEHAC-02	-	2-TS-5791B

* SEE NOTE 8

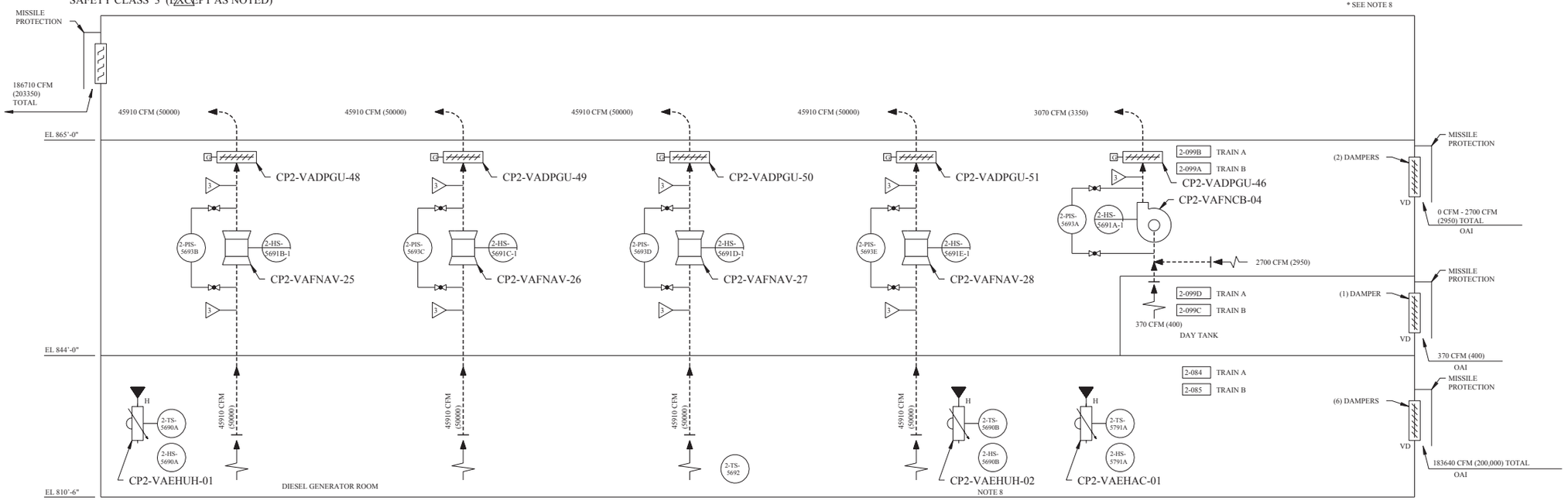

DIESEL GENERATOR AREA TRAIN A AND TRAIN B VENTILATION SYSTEM
SAFETY CLASS 3 (EXCEPT AS NOTED)
(TAG NUMBERS FOR TRAIN A SHOWN - SEE TABLE FOR CORRESPONDING TRAIN B TAG NUMBERS)

REV	DWN	CHKD	APVD	REMARKS
CP-13	Mbf 01-17 2006	MHF 01-17 2006		THIS DRAWING REVISED TO INCORPORATE DESIGN CHANGE FDA-1999-003133-01-04 PER SK-0085-99-003133-01-00.

NOTES:

1. FOR HVAC ABBREVIATIONS AND SYMBOLS SEE DRAWINGS M1-0313 AND M1-0200.
2. THIS DIAGRAM IS A SCHEMATIC REPRESENTATION AND IS INTENDED TO SHOW GENERAL AIR DISTRIBUTION AND FLOW PATHS.
3. BALANCING DAMPERS, REGISTERS, DIFFUSERS, FLEXIBLE CONNECTIONS AND ALL OTHER RELATED ACCESSORIES NOT SHOWN ON THIS DIAGRAM SHALL BE PROVIDED AS INDICATED ON THE HVAC ARRANGEMENT DRAWINGS AND SPECIFICATIONS.
4. FOR LOGIC OF 2-TIC-6088 SEE ICD M2-2307-03
5. AIR FLOW QUANTITES SHOWN ARE BASED ON A DENSITY OF 0.075 LB/FT OCCURING AT THE STANDARD CONDITION OF DRY AIR AT 70°F AND 29.92" HG BAROMETRIC PRESSURE. QUANTITIES IN PARENTHESES ARE ACTUAL AIR FLOW RATES BASED ON DENSITY AT DESIGN CONDITIONS.
6. FIRE DAMPERS REMOVED FROM FLOW DIAGRAM ONLY, FOR LOCATIONS SEE DUCT LAYOUT DRAWINGS.
7. FOR NORMAL VENTILATION SYSTEM (NON SAFETY RELATED) REFER TO DWG M1-0303-C.
8. UNIT HEATER ABANDONED IN PLACE. ELECTRICAL CONNECTIONS ARE DISCONNECTED.
9. FOR THE NON-SAFETY VENTILATION SYSTEMS, THE AIR FLOW RATES SHOWN ARE ORIGINAL DESIGN VALUES FOR INITIAL FLOW BALANCING AND DO NOT REPRESENT AS-BUILT. AIR FLOW IS BALANCED TO MAINTAIN ROOM TEMPERATURES WITHIN DESIGN DURING NORMAL OPERATION AND TO ENSURE THE DIRECTION OF AIR FLOW IS AS SHOWN.
10. WIRE MESH GRILLE IS INSTALLED OVER THE DUCT FLANGE AT THE CEILING. A SUPPLY DUCT ELBOW WITH WIRE MESH GRILLE IS INSTALLED ON TOP OF THE AHU.
11. THE S-5 STAIRWELL (ROOMS 085C, 096B AND 105B) IS PART OF THE NORMAL EAVS EXHAUST AIR FLOW PATH FROM THE MAJOR EQUIPMENT ROOMS TO THE HVAC EQUIPMENT ROOM 104 PER DBD-ME-302B AND DBD-ME-302C.

R

REFERENCE DRAWINGS:

1.	FLOW DIAG VENT AAP BLDG AND CONTROL BLDG UPS AREA A/C SYSTEM	M1-0313
2.	MECHANICAL DRAWING NOTES AND SYMBOLS	M1-0200
3.	FLOW DIAGRAM VENT CHILLED WATER	M2-0307
4.	DELETED	
5.	FLOW DIAG VENT SAFEGUARDS AND ELEC AREA	M2-0302A
6.	FLOW DIAG VENT SAFEGUARDS AND ELEC AREA	M2-0302B
7.	FLOW DIAG VENT SAFEGUARDS AND ELEC AREA	M2-0302C
8.	DELETED	
9.	VENT SAFEGUARDS BLDG PLAN @ EL 852"-6"	M2-0654 SERIES
10.	VENT SAFEGUARDS BLDG DIESEL GEN AREA PLAN	M2-0658 SERIES
11.	VENT SAFEGUARDS BLDG PLAN @ EL 873"-6"	M2-0655 SERIES
12.	FLOW DIAG VENT AUXILIARY BLDG	M1-0303-C

FSAR FIGURE 9.4-4

THIS DRAWING CREATED ELECTRONICALLY

DRAWING 2323-M2-0302 REV CP-2
HAS BEEN SPLIT INTO THE FOLLOWING SHEETS:

M2-0302
M2-0302-A
M2-0302-B
M2-0302-C

CLASS I
(NUCLEAR SAFETY-RELATED)
SAFETY CLASS 1 SEISMIC CATEGORY I
SAFETY CLASS 2 CLASS 1E
SAFETY CLASS 3 ASSOCIATED CIRCUITS

LUMINANT
CPSES
GLEN ROSE, TEXAS

FLOW DIAGRAM - VENTILATION
SAFEGUARDS AND ELECTRICAL AREA

DWG. NO.	SH. NO.	REV.
M2-0302	-	CP-13

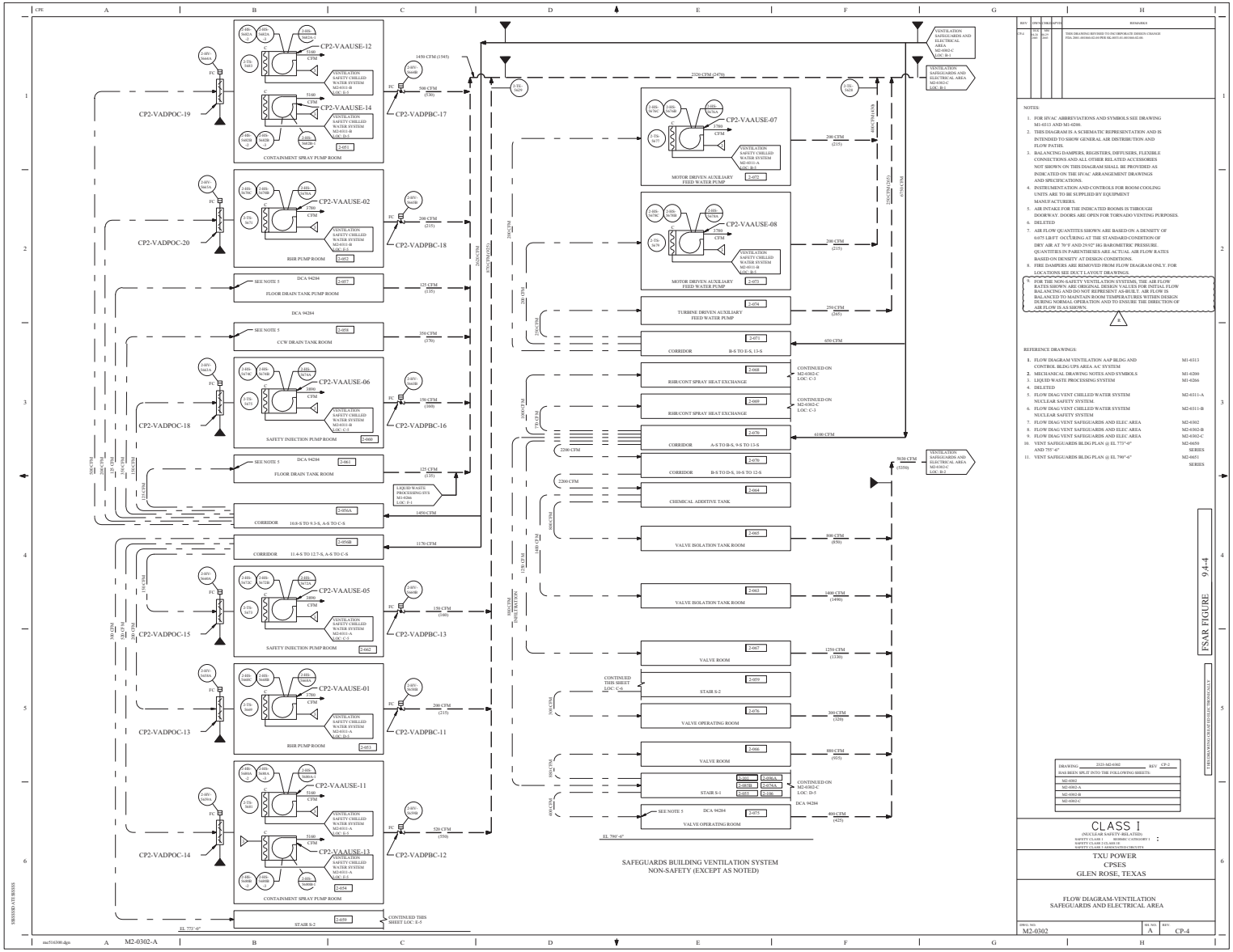

REV	DRN	CHKD	APVD	REMARKS
19.4	MM 10/31/2011	MM 10/31/2011	MM 10/31/2011	THIS DRAWING REVISED TO INCORPORATE DESIGN CHANGE FSAR 2009-0018-EC-01 PER NL-09-01 01-09-1000-EC-01

NOTES:

1. FOR HVAC ABBREVIATIONS AND SYMBOLS SEE DRAWING M1-6013 AND M1-0200.
2. THIS DIAGRAM IS A SCHEMATIC REPRESENTATION AND IS INTENDED TO SHOW GENERAL AIR DISTRIBUTION AND FLOW PATHS.
3. BALANCING DAMPERS, REGISTERS, DIFFUSERS, FLEXIBLE CONNECTIONS AND ALL OTHER RELATED ACCESSORIES NOT SHOWN ON THIS DIAGRAM SHALL BE PROVIDED AS INDICATED ON THE HVAC ARRANGEMENT DRAWINGS AND SPECIFICATIONS.
4. INSTRUMENTATION AND CONTROLS FOR ROOM COOLING UNITS ARE TO BE SUPPLIED BY EQUIPMENT MANUFACTURERS.
5. AIR INTAKE FOR THE INDICATED ROOMS IS THROUGH DOORWAY. DOORS ARE OPEN FOR TORNADO VENTING PURPOSES.
6. DELETED
7. AIR FLOW QUANTITIES SHOWN ARE BASED ON A DENSITY OF 0.075 LB/FT OCCURRING AT THE STANDARD CONDITION OF DRY AIR AT 70°F AND 29.92" HG BAROMETRIC PRESSURE. QUANTITIES IN PARENTHESES ARE ACTUAL AIR FLOW RATES BASED ON DENSITY AT DESIGN CONDITIONS.
8. FIRE DAMPERS ARE REMOVED FROM FLOW DIAGRAM ONLY. FOR LOCATIONS SEE DUCT LAYOUT DRAWINGS.
9. FOR THE NON-SAFETY VENTILATION SYSTEMS, THE AIR FLOW RATES SHOWN ARE ORIGINAL DESIGN VALUES FOR INITIAL FLOW BALANCING AND DO NOT REPRESENT AS-BUILT. AIR FLOW IS BALANCED TO MAINTAIN ROOM TEMPERATURES WITHIN DESIGN DURING NORMAL OPERATION AND TO ENSURE THE DIRECTION OF AIR FLOW IS AS SHOWN.

REFERENCE DRAWINGS:

1.	FLOW DIAGRAM VENTILATION AAF BLDG AND CONTROL BLDG UPS AREA AC SYSTEM	M1-6313
2.	MECHANICAL DRAWING NOTES AND SYMBOLS	M1-0200
3.	LIQUID WASTE PROCESSING SYSTEM	M1-0266
4.	DELETED	
5.	FLOW DIAG VENT CHILLED WATER SYSTEM NUCLEAR SAFETY SYSTEM.	M2-6311-A
6.	FLOW DIAG VENT CHILLED WATER SYSTEM NUCLEAR SAFETY SYSTEM	M2-6311-B
7.	FLOW DIAG VENT SAFEGUARDS AND ELEC AREA	M2-6302
8.	FLOW DIAG VENT SAFEGUARDS AND ELEC AREA	M2-6302-B
9.	FLOW DIAG VENT SAFEGUARDS AND ELEC AREA	M2-6302-C
10.	VENT SAFEGUARDS BLDG PLAN @ EL 775'-0" AND 755'-6"	M2-6650 SERIES
11.	VENT SAFEGUARDS BLDG PLAN @ EL 780'-6"	M2-6651 SERIES

FSAR FIGURE 9.4-4

THIS DRAWING IS NOT SPLIT INTO THE FOLLOWING SHEETS

DRAWING 2123-M2-0302	REV CP-2
M2-0302	
M2-0302-A	
M2-0302-B	
M2-0302-C	

CLASS I
(NUCLEAR SAFETY-RELATED)
SAFETY CLASS 1 : SEISMIC CATEGORY 1
SAFETY CLASS 2 GUARANTEED CRITERIA

TXU POWER
CPSES
GLEN ROSE, TEXAS

FLOW DIAGRAM-VENTILATION
SAFEGUARDS AND ELECTRICAL AREA

DRWG NO.	REV NO.	REV:
M2-0302	A	CP-4

M2-0302-A

nuc516300.dgn

SHEET 1 OF 1

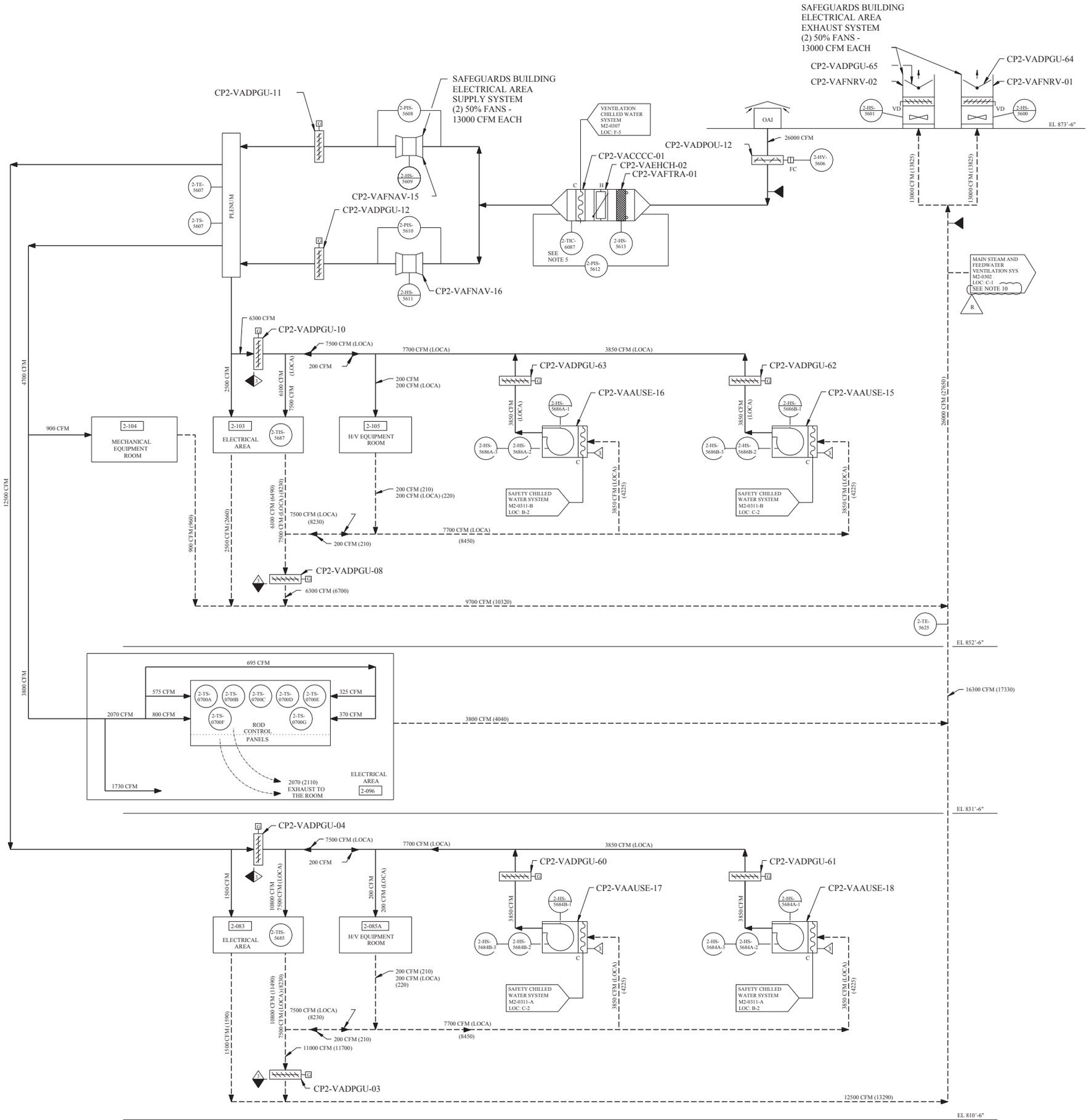

ELECTRICAL AREA VENTILATION SYSTEM
SAFETY CLASS 3 (EXCEPT AS NOTED)

REV	DWN	CHK	APVD	REMARKS
CP-11	MM 01-17 2006	MH 01-17 2006		THIS DRAWING REVISED TO INCORPORATE DESIGN CHANGE FDA-1999-003133-01-04 PER SK-0086-99-003133-01-00.

NOTES

1. FOR HVAC ABBREVIATIONS AND SYMBOLS SEE DRAWING M1-0313 AND M1-0200.
2. THIS DIAGRAM IS A SCHEMATIC REPRESENTATION AND IS INTENDED TO SHOW GENERAL AIR DISTRIBUTION AND FLOW PATHS.
3. BALANCING DAMPERS, REGISTERS, DIFFUSERS, FLEXIBLE CONNECTIONS AND ALL OTHER RELATED ACCESSORIES NOT SHOWN ON THIS DIAGRAM SHALL BE PROVIDED AS INDICATED ON THE HVAC ARRANGEMENT DRAWINGS AND SPECIFICATIONS.
4. INSTRUMENTATION AND CONTROLS FOR ROOM COOLING UNITS ARE TO BE SUPPLIED BY EQUIPMENT MANUFACTURERS.
5. FOR LOGIC OF 2-TIC-6087 SEE ICD M2-2307-06
6. FIRE DAMPERS REMOVED FROM FLOW DIAGRAM ONLY, FOR LOCATIONS SEE DUCT LAYOUT DRAWINGS.
7. AIR FLOW QUANTITIES SHOWN ARE BASED ON DENSITY OF 0.075 LB/FT OCCURING AT THE STANDARD CONDITION OF DRY AIR AT 70°F AND 29.92" HG BAROMETRIC PRESSURE. QUANTITIES IN PARENTHESIS ARE ACTUAL AIR FLOW RATES BASED ON DENSITY AT DESIGN CONDITION.
8. FOR THE NON-SAFETY VENTILATION SYSTEMS, THE AIR FLOW RATES SHOWN ARE ORIGINAL DESIGN VALUES FOR INITIAL FLOW BALANCING AND DO NOT REPRESENT AS-BUILT. AIR FLOW IS BALANCED TO MAINTAIN ROOM TEMPERATURES WITHIN DESIGN DURING NORMAL OPERATION AND TO ENSURE THE DIRECTION OF AIR FLOW IS AS SHOWN.
9. THE SAFEGUARDS BUILDING ELECTRICAL AREA MUST BE MAINTAINED AT A SLIGHTLY POSITIVE PRESSURE.
10. THE S-5 STAIRWELL (ROOMS 085C, 096B AND 105B) IS PART OF THE NORMAL EAVS EXHAUST AIR FLOW PATH FROM THE MAJOR EQUIPMENT ROOMS TO THE HVAC EQUIPMENT ROOM 104 PER DBD-ME-302B AND DBD-ME-302C.

R

REFERENCE DRAWINGS

1.	FLOW DIAGRAM VENTILATION AAP BLDG AND CONTROL BLDG UPS AREA A/C SYSTEM	M1-0313
2.	MECHANICAL DRAWING NOTES AND SYMBOLS	M1-0200
3.	FLOW DIAGRAM VENT CHILLED WATER	M2-0307
4.	FLOW DIAG VENT CHILLED WATER SYSTEM NUCLEAR SAFETY SYSTEM.	M2-0311-A
5.	FLOW DIAG VENT CHILLED WATER SYSTEM NUCLEAR SAFETY SYSTEM.	M2-0311-B
6.	VENT SAFEGUARDS BLDG PLAN @ EL 810'-6"	M2-0652 SERIES
7.	VENT SAFEGUARDS BLDG PLAN @ EL 831'-6"	M2-0653 SERIES
8.	VENT SAFEGUARDS BLDG PLAN @ EL 852'-6"	M2-0654 SERIES
9.	VENT SAFEGUARDS BLDG PLAN @ EL 873'-6"	M2-0655 SERIES

FSAR FIGURE 9.4-4

THIS DRAWING CREATED ELECTRONICALLY

DRAWING 2323-M2-0302 REV CP-2
HAS BEEN SPLIT INTO THE FOLLOWING SHEETS:

M2-0302
M2-0302-A
M2-0302-B
M2-0302-C

CLASS I
(NUCLEAR SAFETY-RELATED)
SAFETY CLASS 1 SEISMIC CATEGORY I
SAFETY CLASS 2 CLASS 1E
SAFETY CLASS 3 ASSOCIATED CIRCUITS

LUMINANT
CPSES
GLEN ROSE, TEXAS

FLOW DIAGRAM - VENTILATION
SAFEGUARDS AND ELECTRICAL AREA

DWG. NO. M2-0302 | SH. NO. B | REV. CP-11

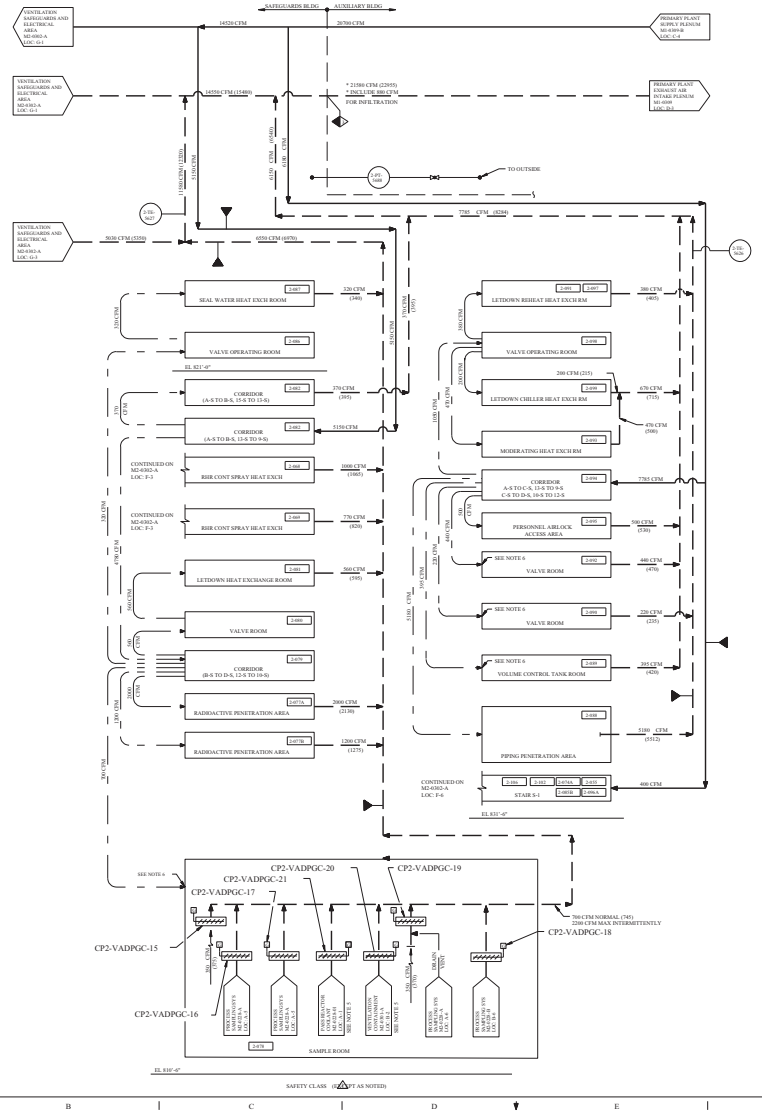

REV	DESCRIPTION			REMARKS
	ORIG	CHKD	APPD	
CP-7	Nov 2 2010	Nov 2 2010	Nov 2 2010	THIS DRAWING REVISED TO INCORPORATE DESIGN CHANGE FSAR-2009-00304-02-00 PER DCP/07-01-00304-02-00

NOTES:

1. FOR HVAC ABBREVIATIONS AND SYMBOLS SEE DRAWING M1-6313 AND M1-6200.
2. THIS DIAGRAM IS A SCHEMATIC REPRESENTATION AND IS INTENDED TO SHOW GENERAL AIR DISTRIBUTION AND FLOW PATHS.
3. BALANCING DAMPERS, REGISTERS, DIFFUSERS, FLEXIBLE CONNECTIONS AND ALL OTHER RELATED ACCESSORIES NOT SHOWN ON THIS DIAGRAM SHALL BE PROVIDED AS INDICATED ON THE HVAC ARRANGEMENT DRAWINGS AND SPECIFICATIONS.
4. THE SAFEGUARD BUILDING WILL BE MAINTAINED AT A SLIGHT NEGATIVE PRESSURE.
5. 750 CFM INTERMITTENTLY FROM EACH SAMPLE PANEL MODULE.
6. AIR INTAKE FOR THE INDICATED ROOMS IS THROUGH DOORWAY DOORS ARE OPEN FOR TORNADO VENTING PURPOSES.
7. AIR FLOW QUANTITIES SHOWN ARE BASED ON A DENSITY OF 0.075 LB/FT OCCURING AT THE ST ANDARD CONDITION OF DRY AIR AT 70°F AND 29.92" HG BAROMETRIC PRESSURE. QUANTITIES IN PARENTHESES ARE AIR FLOW RATES BASED ON DENSITY AT DESIGN CONDITIONS.
8. FIRE DAMPERS REMOVED FROM FLOW DIAGRAM ONLY, FOR LOCATIONS SEE DUCT LAYOUT DRAWINGS.
9. THE AIR FLOW RATES SHOWN ARE ORIGINAL DESIGN VALUES FOR INITIAL FLOW BALANCING AND DO NOT REPRESENT AS-BUILT. AIR FLOW IS BALANCED TO MAINTAIN ROOM TEMPERATURES WITHIN DESIGN DURING NORMAL OPERATION AND TO ENSURE THE DIRECTION OF AIR FLOW IS AS SHOWN. B

REFERENCE DRAWINGS:

1.	FLOW DIAGRAM VENTILATION AAP BLDG AND CONTROL BLDG UPS AREA A/C SYSTEM	M1-6313
2.	MECHANICAL DRAWING NOTES AND SYMBOLS	M1-6200
3.	DELETED	
4.	FLOW DIAG VENT PRIM PLANT SUPPLY AND EXHAUST	M1-6309
5.	FLOW DIAG VENT PRIM PLANT SUPPLY AND EXHAUST	M1-6309-B
6.	FLOW DIAG VENT SAFEGUARD AND ELEC AREA	M2-0302-A
7.	VENT SAFEGUARDS BLDG PLAN @ EL 810'-6"	M2-6652 SERIES
8.	VENT SAFEGUARDS BLDG PLAN @ EL 831'-6"	M2-6653 SERIES
9.	FLOW DIAGRAM VENTILATION CONTAINMENT	M2-6301-A
10.	FLOW DIAGRAM PROCESS SAMPLING SYSTEM	M2-0228-A
11.	FLOW DIAGRAM PROCESS SAMPLING SYSTEM	M2-0228-B
12.	FLOW DIAGRAM POST ACCIDENT SAMPLING SYSTEM REACTOR COOLANT	M2-0229-01

FSAR FIGURE 9.4-4

THIS DRAWING IS CERTIFIED ELECTRONICALLY

DRAWING 3123-M2-0302	REV CP-2
HAS BEEN SPLIT INTO THE FOLLOWING SHEETS	
M2-0302	
M2-0302-A	
M2-0302-B	
M2-0302-C	

CLASS I
(NUCLEAR SAFETY-RELATED)
SAFETY CLASS 1 SEISMIC CATEGORY 1
SAFETY CLASS 2 GLASS HS
SAFETY CLASS 3 AND NON-SEISMIC CIRCUITS

TXU POWER
CPSES
GLEN ROSE, TEXAS

FLOW DIAGRAM - VENTILATION
SAFEGUARDS AND ELECTRICAL AREA

DRAWING NO.	SH. NO.	REV.
M2-0302	C	CP-7

SBSSSSDS AT BSSSS

nuc516500.dgn

M2-0302-C

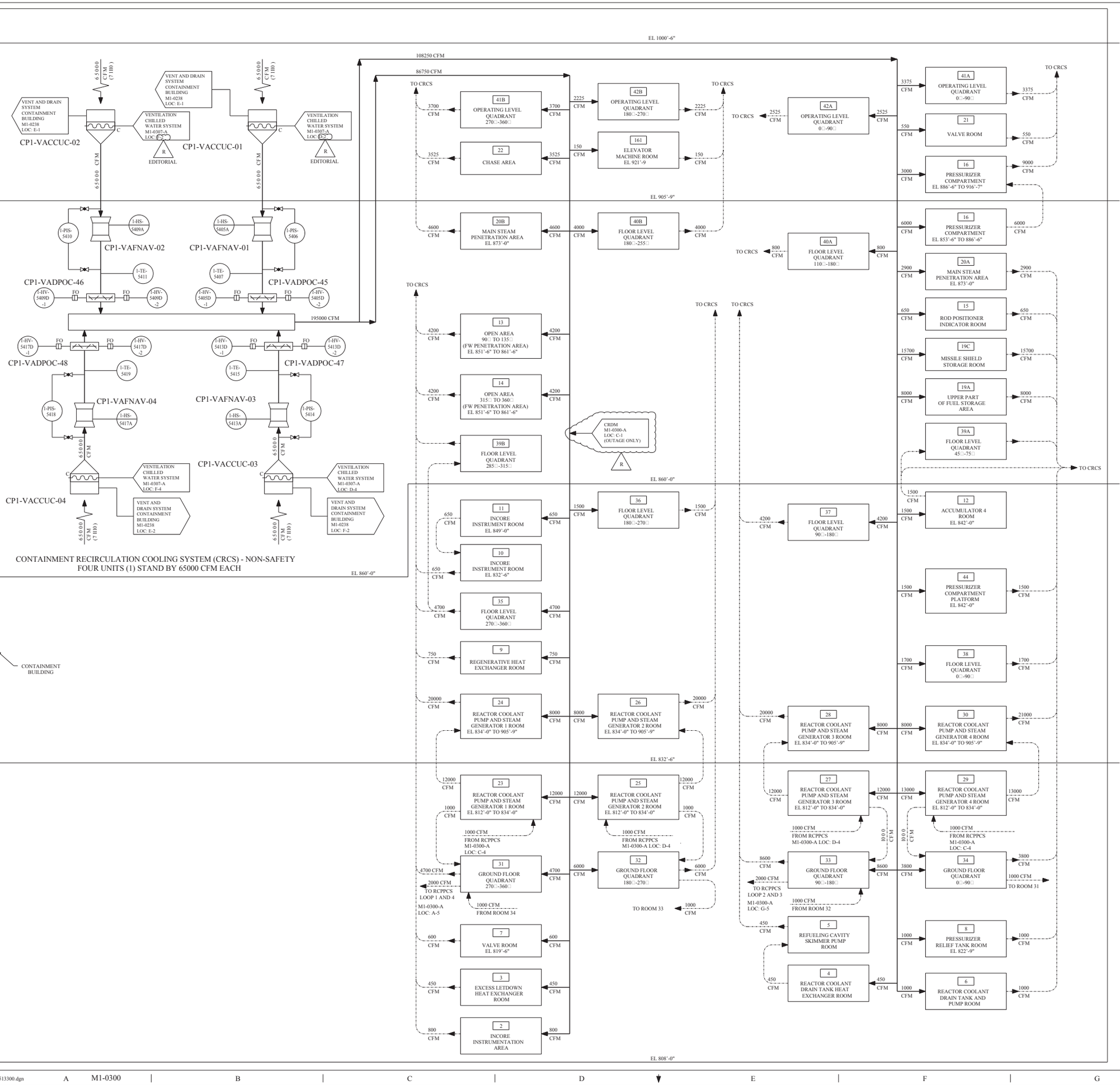

REV	DWN	CHK	APVD	REMARKS
CP-12	JRMC 01-24 2008	DJL 02-13 2008		THIS DRAWING REVISED TO INCORPORATE DESIGN CHANGE FDA 2007-001775-01-00 PER SIC-0001-07-001775-01-00. EDITORIAL CHANGES AS NOTED

NOTES:

1. FOR SYMBOLS AND ABBREVIATIONS SEE DRAWINGS M1-0313 AND M1-0200.
2. THIS DIAGRAM IS A SCHEMATIC REPRESENTATION AND IS INTENDED TO SHOW GENERAL AIR DISTRIBUTION AND FLOW PATHS.
3. BALANCING DAMPERS, REGISTERS, DIFFUSERS, FLEXIBLE CONNECTIONS AND ALL OTHER RELATED ACCESSORIES SHALL BE PROVIDED AS INDICATED ON THE HVAC ARRANGEMENT DRAWING AND SPECIFICATIONS.
4. THIS FLOW DIAGRAM IS FOR UNIT 1 ONLY.
5. THE CONTAINMENT BUILDING WILL BE MAINTAINED AT ATMOSPHERIC PRESSURE.
6. AIR FLOW QUANTITIES SHOWN ARE BASED ON A DENSITY OF 0.075 LB/FT OCCURRING AT THE STANDARD CONDITION OF DRY AIR AT 70°F AND 29.92" HG BAROMETRIC PRESSURE. QUANTITIES IN PARENTHESES ARE ACTUAL AIR FLOW RATES BASED ON DENSITY AT DESIGN CONDITIONS.
7. AIR FLOW RATES SHOWN ARE ORIGINAL DESIGN VALUES FOR INITIAL FLOW BALANCING AND DO NOT REPRESENT AS-BUILT. AIR FLOW IS BALANCED TO MAINTAIN ROOM TEMPERATURES WITHIN DESIGN DURING NORMAL OPERATION AND TO ENSURE THE DIRECTION OF AIR FLOW IS AS SHOWN.

REFERENCES:

1.	M1-0200	MECHANICAL SYMBOLS AND NOTES
2.	M1-0313	FLOW DIAGRAM - VENTILATION AAP BLDG AND CONTROL BLDG UPS AREA A/C SYSTEMS
3.	M1-0307-A	FLOW DIAGRAM - VENTILATION CHILLED WATER SYSTEM
4.	M1-0238	FLOW DIAGRAM - VENT AND DRAIN SYSTEM CONTAINMENT BLDG
5.	M1-0300-A	FLOW DIAGRAM - VENTILATION CONTAINMENT

FSAR FIGURE 9.4-5

THIS DRAWING CREATED ELECTRONICALLY

DRAWING M1-0300 REV CP-8
HAS BEEN SPLIT INTO THE FOLLOWING SHEETS:
M1-0300
M1-0300-A

CLASS II

LUMINANT
CPNPP
GLEN ROSE, TEXAS

FLOW DIAGRAM - VENTILATION CONTAINMENT

DWG. NO. M1-0300 | SH. NO. - | REV. CP-12

$$$$$$$$ DATE$$$$$$

me513300.dgn M1-0300 < FINAL PRINT >

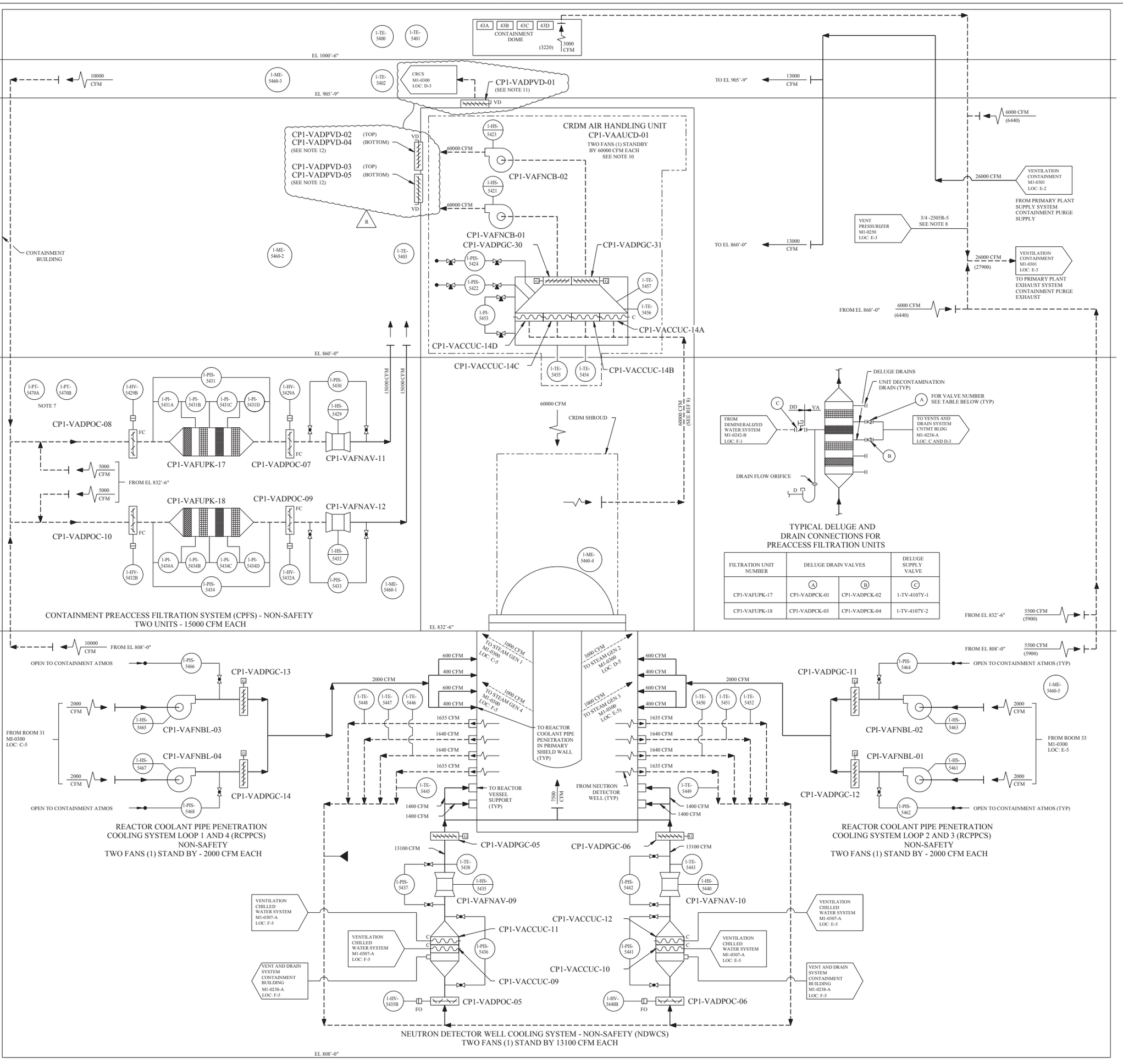

REV	DWN	CHK	APVD	REMARKS
CP-10	JSAC 01-28-2008	DJL 02-11-2008		THIS DRAWING REVISED TO INCORPORATE DESIGN CHANGE FDA 2007-001775-01-00 PER SK-0002-07-001775-01-01.

NOTES:

1. FOR SYMBOLS AND ABBREVIATIONS SEE DRAWINGS M1-0313 AND M1-0200.
2. THIS DIAGRAM IS A SCHEMATIC REPRESENTATION AND IS INTENDED TO SHOW GENERAL AIR DISTRIBUTION AND FLOW PATHS.
3. BALANCING DAMPERS, REGISTERS, DIFFUSERS, FLEXIBLE CONNECTIONS AND ALL OTHER RELATED ACCESSORIES SHALL BE PROVIDED AS INDICATED ON THE HVAC ARRANGEMENT DRAWING AND SPECIFICATIONS.
4. THIS FLOW DIAGRAM IS FOR UNIT 1 ONLY.
5. THE CONTAINMENT BUILDING WILL BE MAINTAINED AT ATMOSPHERIC PRESSURE.
6. AIR FLOW QUANTITIES SHOWN ARE BASED ON A DENSITY OF 0.075 LB/FT OCCURRING AT THE STANDARD CONDITION OF DRY AIR AT 70°F AND 29.92" HG BAROMETRIC PRESSURE. QUANTITIES IN PARENTHESES ARE ACTUAL AIR FLOW RATES BASED ON DENSITY AT DESIGN CONDITIONS.
7. 1-PT-5470A AND B MONITOR THE CONTAINMENT PRESSURE (NARROW RANGE).
8. 3/4 " TUBING TO BE INSTALLED AT THIS CONNECTION TO VENT PRESSURIZER DURING DRAINING AND FILLING.
9. AIR FLOW RATES SHOWN ARE ORIGINAL DESIGN VALUES FOR INITIAL FLOW BALANCING AND DO NOT REPRESENT AS-BUILT. AIR FLOW IS BALANCED TO MAINTAIN ROOM TEMPERATURES WITHIN DESIGN DURING NORMAL OPERATION AND TO ENSURE THE DIRECTION OF AIR FLOW IS AS SHOWN.
10. SEE GENERAL ARRANGEMENT DRAWINGS N1559-GA SERIES FOR THE AIR HANDLING UNIT (AHU) FOR THE CRDM VENTILATION SYSTEM.
11. DAMPER CLOSED EXCEPT DURING OUTAGES.
12. DAMPER OPEN EXCEPT DURING OUTAGES.

R

REFERENCES:

1.	M1-0200	MECHANICAL SYMBOLS AND NOTES
2.	M1-0301	FLOW DIAGRAM - VENTILATION CONTAINMENT
3.	M1-0307-A	FLOW DIAGRAM - VENTILATION CHILLED WATER SYSTEM
4.	M1-0238	FLOW DIAGRAM - VENT AND DRAIN SYSTEM CONTAINMENT BLDG
5.	M1-0242	DEMINERALIZED WATER
6.	M1-0300	FLOW DIAGRAM - VENTILATION CONTAINMENT
7.	M1-0313	FLOW DIAGRAM - VENTILATION AAP BLDG AND CONTROL BLDG UPS AREA A/C SYSTEMS
8.	10023E90	VENDOR DRAWING - RRVCH/HAUP FINAL ASSEMBLY

FSAR FIGURE 9.4-5

THIS DRAWING CREATED ELECTRONICALLY

DRAWING M1-0300 REV CP-8
HAS BEEN SPLIT INTO THE FOLLOWING SHEETS:
M1-0300
M1-0300-A

CLASS III

LUMINANT
CPNPP
GLEN ROSE, TEXAS

FLOW DIAGRAM - VENTILATION CONTAINMENT

DWG. NO.	SH. NO.	REV.
M1-0300	A	CP-10

FINAL PRINT

REF CKD 3/18/97 CP-4

me104290.dgn A M1-0300-A B C D E F G H

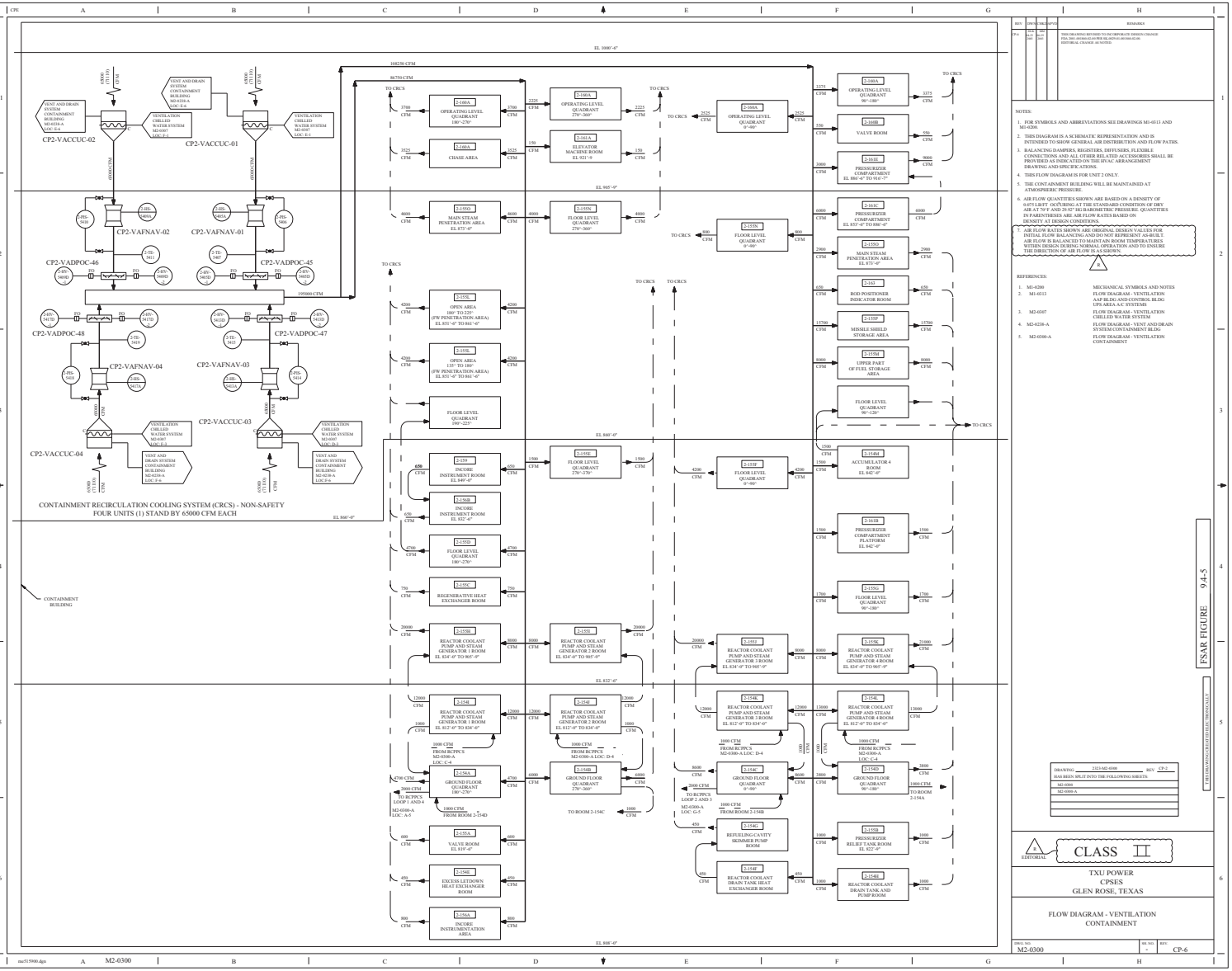

REV	DESCRIPTION	ORIGINATOR	REMARKS
CP-6	ISSUED FOR CONSTRUCTION	MARK ANDERSON	THIS DRAWING REVISED TO INCORPORATE DESIGN CHANGE FSAR-2003-0018-02-01 PER TR-ARDS-01-001/R01-02-00. EDITORIAL CHANGE AS NOTED

NOTES:

1. FOR SYMBOLS AND ABBREVIATIONS SEE DRAWINGS M1-0313 AND M1-0280.
2. THIS DIAGRAM IS A SCHEMATIC REPRESENTATION AND IS INTENDED TO SHOW GENERAL AIR DISTRIBUTION AND FLOW PATHS.
3. BALANCING DAMPERS, REGISTERS, DIFFUSERS, FLEXIBLE CONNECTIONS AND ALL OTHER RELATED ACCESSORIES SHALL BE PROVIDED AS INDICATED ON THE HVAC ARRANGEMENT DRAWING AND SPECIFICATIONS.
4. THIS FLOW DIAGRAM IS FOR UNIT 2 ONLY.
5. THE CONTAINMENT BUILDING WILL BE MAINTAINED AT ATMOSPHERIC PRESSURE.
6. AIR FLOW QUANTITIES SHOWN ARE BASED ON A DENSITY OF 0.075 LB/FT. OCCURING AT THE STANDARD CONDITION OF DRY AIR AT 70°F AND 29.92" HG BAROMETRIC PRESSURE. QUANTITIES IN PARENTHESES ARE AIR FLOW RATES BASED ON DENSITY AT DESIGN CONDITIONS.

A AIR FLOW RATES SHOWN ARE ORIGINAL DESIGN VALUES FOR INITIAL FLOW BALANCING AND DO NOT REPRESENT AS-BUILT AIR FLOW IS BALANCED TO MAINTAIN ROOM TEMPERATURES WITHIN DESIGN DURING NORMAL OPERATION AND TO ENSURE THE DIRECTION OF AIR FLOW IS AS SHOWN.

REFERENCES:

1.	M1-0280	MECHANICAL SYMBOLS AND NOTES
2.	M1-0313	FLOW DIAGRAM - VENTILATION AAP BLDG AND CONTROL BLDG UPS AREA A/C SYSTEMS
3.	M2-0187	FLOW DIAGRAM - VENTILATION CHILLED WATER SYSTEM
4.	M2-0218-A	FLOW DIAGRAM - VENT AND DRAIN SYSTEM CONTAINMENT BLDG
5.	M2-0160-A	FLOW DIAGRAM - VENTILATION CONTAINMENT

FSAR FIGURE 9.4-5

THIS DRAWING CONTAINS FIGURE THAT EXTENDS THROUGH SHEET 6

DRAWING 3323-M2-0300 REV CP-2
BASE BID IS SPLIT INTO THE FOLLOWING SHEETS:
M2-0300
M2-0300-A

A EDITORIAL

CLASS II

TXU POWER
CPSES
GLEN ROSE, TEXAS

FLOW DIAGRAM - VENTILATION CONTAINMENT

DRWG NO: M2-0300 | RR NO: - | REV: CP-6

SHEET 6 OF 6 SHEETS

nuc515900.dgn

REV	DWN	CHKD	APVD	REMARKS
CP-11	DLK 10-16-2006	MH 10-16-2006		THIS DRAWING REVISED TO INCORPORATE DESIGN CHANGE FDA 2005-003364-05-02 PER SK-0031-05-003364-05-00.

NOTES:

1. FOR SYMBOLS AND ABBREVIATIONS SEE DRAWINGS M1-0313 AND M1-0200.
2. THIS DIAGRAM IS A SCHEMATIC REPRESENTATION AND IS INTENDED TO SHOW GENERAL AIR DISTRIBUTION AND FLOW PATHS.
3. BALANCING DAMPERS, REGISTERS, DIFFUSERS, FLEXIBLE CONNECTIONS AND ALL OTHER RELATED ACCESSORIES SHALL BE PROVIDED AS INDICATED ON THE HVAC ARRANGEMENT DRAWING AND SPECIFICATIONS.
4. AIR FLOW QUANTITIES SHOWN ARE BASED ON A DENSITY OF 0.075 LB/FT³ OCCURING AT THE STANDARD CONDITION OF DRY AIR AT 70°F AND 29.92" HG BAROMETRIC PRESSURE. QUANTITIES IN PARENTHESES ARE AIR FLOW RATES BASED ON DENSITY AT DESIGN CONDITIONS.
5. THIS FLOW DIAGRAM IS FOR UNIT 2 ONLY.
6. THE CONTAINMENT BUILDING WILL BE MAINTAINED AT ATMOSPHERIC PRESSURE.
7. 2-PT-5470A AND B MONITOR THE CONTAINMENT PRESSURE (NARROW RANGE).
8. 3/4 " TUBING TO BE INSTALLED AT THIS CONNECTION TO VENT PRESSURIZER DURING DRAINING AND FILLING.
9. AIR FLOW RATES SHOWN ARE ORIGINAL DESIGN VALUES FOR INITIAL FLOW BALANCING AND DO NOT REPRESENT AS-BUILT. AIR FLOW IS BALANCED TO MAINTAIN ROOM TEMPERATURES WITHIN DESIGN DURING NORMAL OPERATION AND TO ENSURE THE DIRECTION OF AIR FLOW IS AS SHOWN.

REFERENCES:

1.	M1-0200	MECHANICAL SYMBOLS AND NOTES
2.	M2-0301 M2-0301-A	FLOW DIAGRAM - VENTILATION CONTAINMENT
3.	M2-0307	FLOW DIAGRAM - VENTILATION CHILLED WATER SYSTEM
4.	M2-0238-A	FLOW DIAGRAM - VENT AND DRAIN SYSTEM CONTAINMENT BLDG
5.	M2-0242	DEMINERALIZED WATER
6.	M2-0300	FLOW DIAGRAM - VENTILATION CONTAINMENT
7.	M1-0313	FLOW DIAGRAM - VENTILATION AAP BLDG AND CONTROL BLDG UPS AREA A/C SYSTEMS

DRAWING 2323-M2-0300 REV CP-2
HAS BEEN SPLIT INTO THE FOLLOWING SHEETS:

- M2-0300
- M2-0300-A

FSAR FIGURE 9.4-5

THIS DRAWING CREATED ELECTRONICALLY

CLASS II

TXU POWER
CPSES
GLEN ROSE, TEXAS

FLOW DIAGRAM - VENTILATION CONTAINMENT

DWG. NO. M2-0300 | SH. NO. A | REV. CP-11

FINAL PRINT

REF CKD 09/22/97 CP-7

me722000.dgn A M2-0300-A B C D E F G H

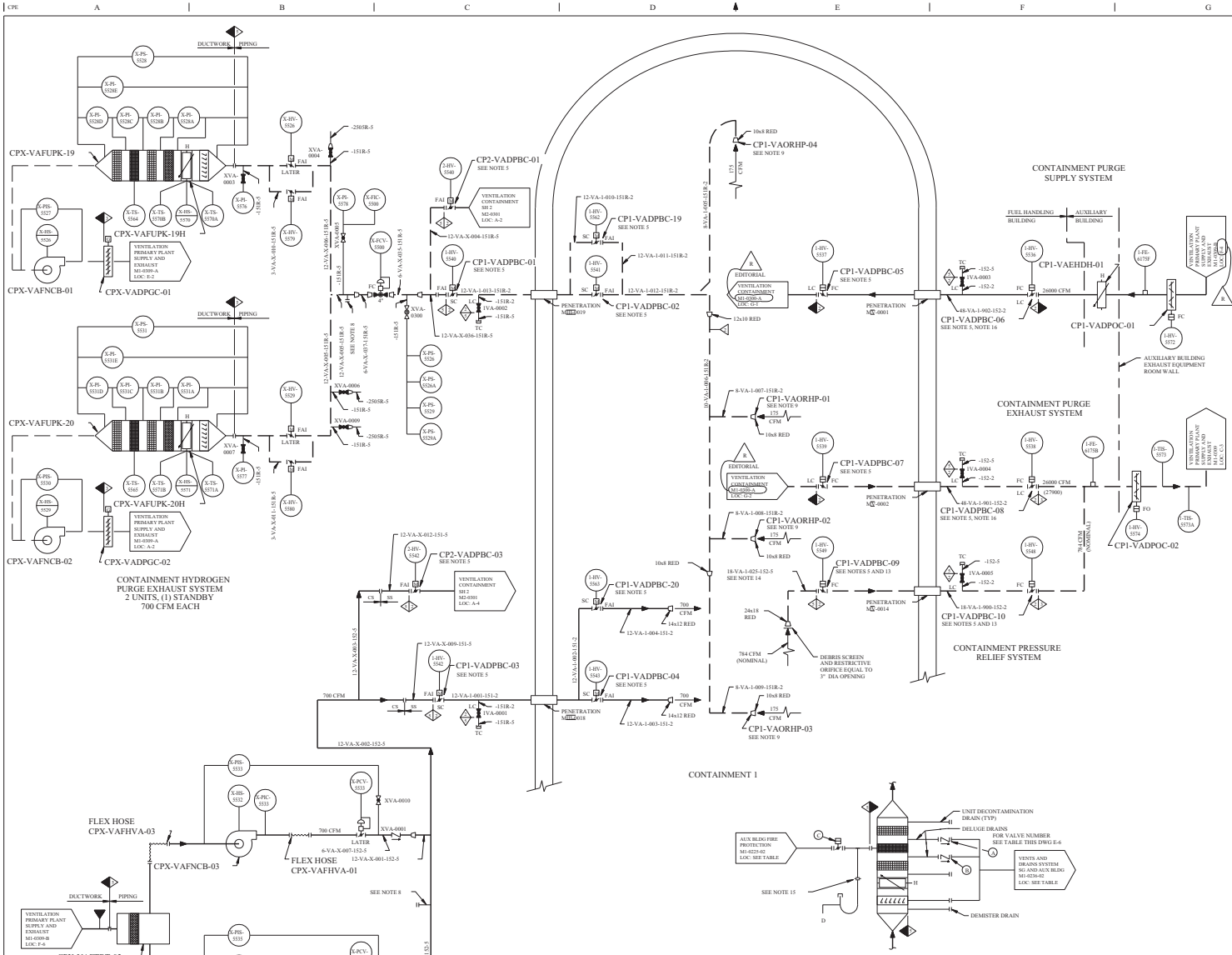

REV	DWN	CHKD	APVD	REMARKS
P-21	RK 04-10-2001	SDL 04-11-2001		THIS DRAWING REVISED TO INCORPORATE DESIGN CHANGE FDA-2001-00137-01-00 PER SK-0002-01-001370-01-00. EDITORIAL CHANGES AS NOTED.

NOTES:

1. FOR ABBREVIATIONS AND SYMBOLS SEE DRAWINGS M1-0313 AND M1-0200.
2. THIS DIAGRAM IS A SCHEMATIC REPRESENTATION AND IS INTENDED TO SHOW GENERAL AIR DISTRIBUTION AND FLOW PATHS.
3. BALANCING DAMPERS, REGISTERS, DIFFUSERS, FLEXIBLE CONNECTIONS AND ALL OTHER RELATED ACCESSORIES NOT SHOWN ON THIS DIAGRAM SHALL BE PROVIDED AS INDICATED ON THE HVAC ARRANGEMENT DRAWINGS AND SPECIFICATIONS.
4. 1-PT-0934 THRU 1-PT-0939 ARE TO BE PROVIDED BY WESTINGHOUSE. SEE WESTINGHOUSE DRAWING 8758D39, SHEETS 22 AND 42 FOR PROCESS CONTROL BLOCK DIAGRAM.
5. VALVES ARE WELDED ON THE END CLOSEST TO THE PENETRATIONS AND FLANGED ON THE OPPOSITE END.
6. BLIND FLANGES TO BE INSTALLED DURING PENETRATION LEAK TEST ONLY.
7. FOR CONTAINMENT RADIATION MONITORING SYSTEM DETAILS SEE GENERAL ATOMIC COMPANY DRAWING ELD 353-1700.
8. THE BLIND FLANGE IS PROVIDED TO FACILITATE FILTER TRAIN TESTING AND FOR ON LINE TESTING OF H2 PURGE SUPPLY AND EXHAUST FANS.
9. PROVIDE SUITABLE SIZE ORIFICE PLATE TO BALANCE AIR FLOW. PLATE SHALL BE MIN WELDED TO 8"x10" AIR INTAKES. ORIFICE DIAMETER MAY VARY FROM 3" TO 8".
10. RADIATION MONITOR IS SEISMIC CATEGORY I AND HAS A DESIGN PRESSURE OF 1 ATMOSPHERE. MONITOR IS BUILT TO MANUFACTURERS STANDARDS.
11. PENETRATIONS M -0018 AND M -0007 DETAILS TRANSFERRED FROM FLOW DIAGRAM M1-0217.
12. END OF PENETRATION PROVIDED WITH THREADED PLUG FOR HYDRO AND ILRT.
13. VALVES CP1-VADPBC-09 AND CP1-VADPBC-10 ARE LIMITED TO 65° MAX OPEN.
14. LINE 18-VA-1-025-152-5 HAS BEEN QUALIFIED AS SEISMIC CATEGORY I BY ANALYSIS.
15. FOR DRAIN FLOW ORIFICE NUMBER AND LINE CONT SEE DWG M1-0225-02 AND 02A LOCATION C,D,E AND F2.
16. A BLIND FLANGE, LOCKED CLOSED TC, PIPE FITTINGS AND CONTAINMENT ISOLATION CAP PER VENDOR DRAWING 4808D16KLXJ SHT 01 MAY BE USED ON THE OUTBOARD SIDE OF THE CONTAINMENT AIR SUPPLY AND/OR EXHAUST ISOLATION VALVES IF THE PENETRATION FAILS THE LOCAL LEAK RATE TEST.

REFERENCES:

M1-0200	MECHANICAL SYMBOLS AND NOTES
M1-0225-02	FLOW DIAGRAM AUXILIARY BUILDING FIRE PROTECTION
M1-0236-02	FLOW DIAGRAM VENTS AND DRAINS SYSTEM SAFEGUARDS AND AUXILIARY BUILDINGS
M1-0300	FLOW DIAGRAM VENTILATION CONTAINMENT
M1-0309	FLOW DIAGRAM VENTILATION PRIMARY PLANT SUPPLY AND EXHAUST
M1-0313	FLOW DIAGRAM VENTILATION AAP BLDG AND CONTROL BLDG UPS AREA A/C SYSTEMS
M2-0301	FLOW DIAGRAM VENTILATION CONTAINMENT SH 2
S1-0513	RB CONTAINMENT LINER DETAILS SH 3
BRP-PN-RB-001	PENETRATION PNEUMATIC AND HYDRAULIC CONN
BRP-PN-RB-002	PENETRATION PNEUMATIC AND HYDRAULIC CONN
BRP-PN-1-503-004	REACTOR CONTAINMENT PENETRATION AND DETAIL

FILTRATION UNIT NUMBER	DELUGE SUPPLY VALVE (C)	DWG REF LOCATION M1-0225-02	DELUGE DRAIN VALVES (A)	DELUGE DRAIN VALVES (B)	DWG REF LOCATION M1-0236-02
CPX-VAFUPK-19	XFP-0648	E-1	CPX-VADPCK-33	CPX-VADPCK-34	D-1
CPX-VAFUPK-20	XFP-0639	E-2	CPX-VADPCK-35	CPX-VADPCK-36	A-2

R EDITORIAL

R EDITORIAL

DRAWING M1-0301 REV CP-10 HAS BEEN SPLIT INTO THE FOLLOWING SHEETS:

M1-0301
M1-0301-A

CLASS I
(NUCLEAR SAFETY-RELATED)

SAFETY CLASS 1	SEISMIC CATEGORY I
SAFETY CLASS 2	CLASS 1E
SAFETY CLASS 3	ASSOCIATED CIRCUITS

TXU ELECTRIC
CPSES
GLEN ROSE, TEXAS

FLOW DIAGRAM
VENTILATION CONTAINMENT

DWG. NO.	SH. NO.	REV.
M1-0301	-	CP-21

FSAR FIGURE 9.4-6

THIS DRAWING CONTAINS SAFEGUARDS INFORMATION

R.EF CHKD 9/30/2001

$$$

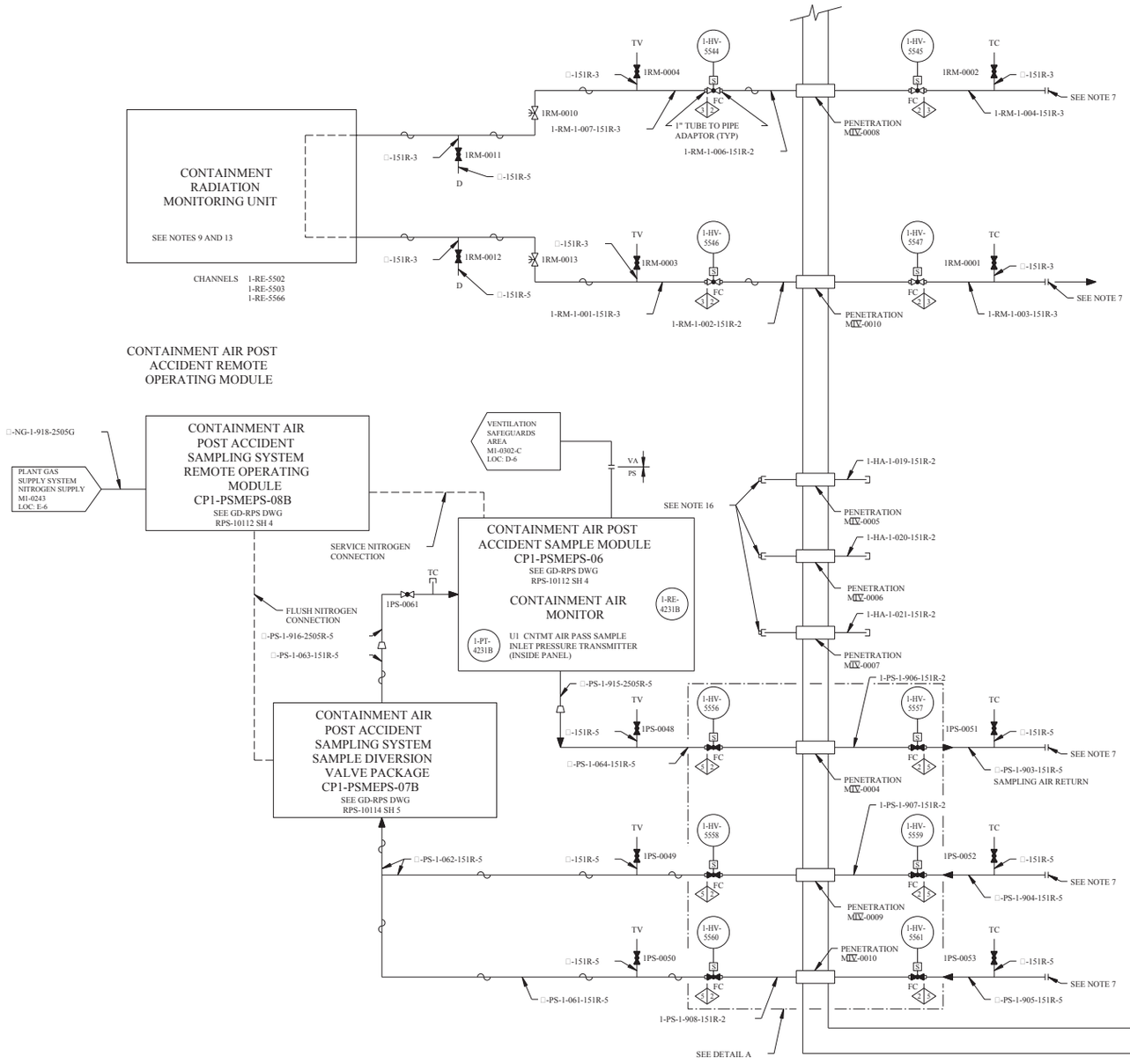

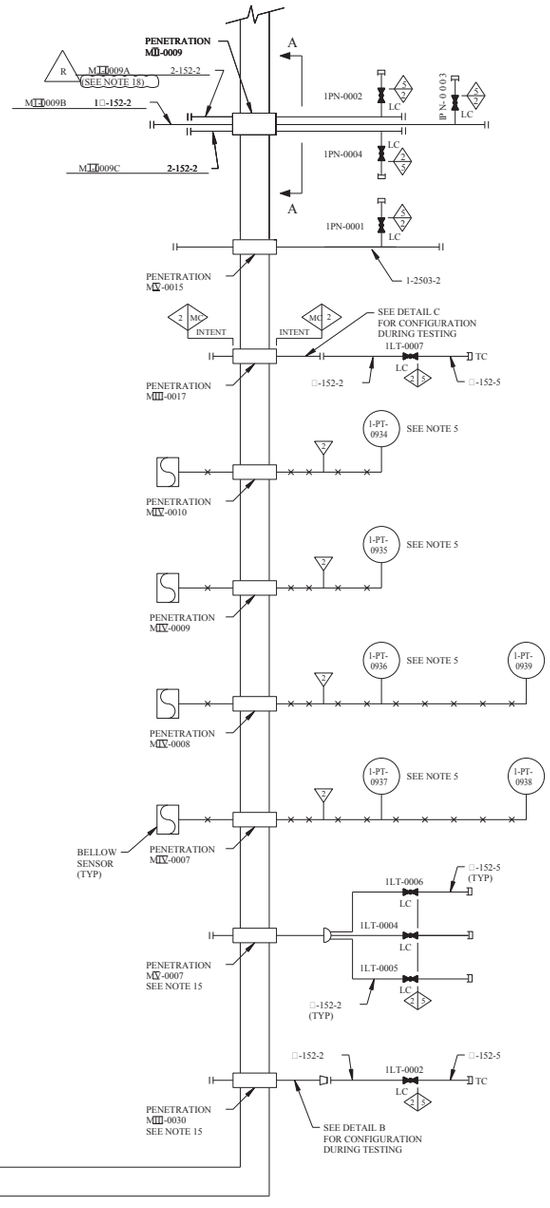

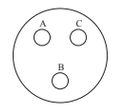

SECTION A-A

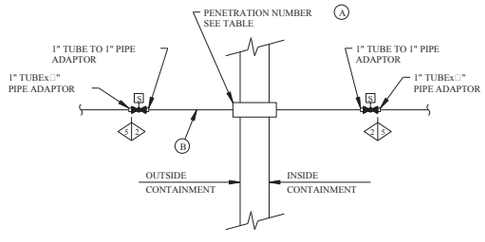

DETAIL A
ZONE C-5

LINE NUMBERS FOR POST-ACCIDENT SAMPLING SYSTEM CONTAINMENT PENETRATIONS	
PENETRATION NUMBER (A)	LINE NUMBER (B)
MX-0004	1-PS-1-906-151R-2
MX-0009	1-PS-1-907-151R-2
MX-0010	1-PS-1-908-151R-2

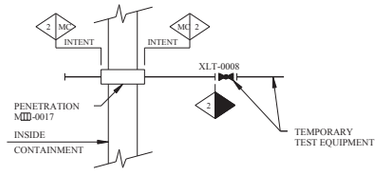

DETAIL C
F-2

TO BE USED DURING TESTING ONLY.
CONTAINMENT DEPRESSURIZATION PERFORMED UTILIZING TEMPORARY TEST VALVE XLT-0008 .

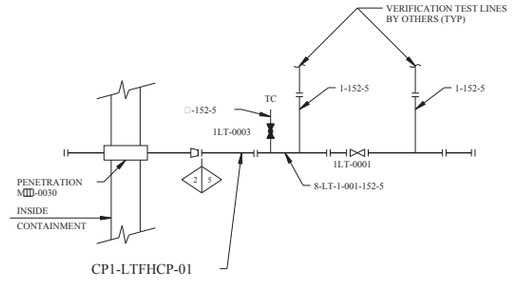

DETAIL B
F-4

TO BE USED DURING TESTING ONLY

REV.	DWN	CHKD	APVD	REMARKS
CP-17	JRMC 03-04-2014	DJL 03-05-2014		THIS DRAWING REVISED TO INCORPORATE DESIGN CHANGE FDA 2013-000203-01-00 PER SK-0001-13-000205-01-00.

NOTES:

1. FOR ABBREVIATIONS AND SYMBOLS SEE DRAWINGS M1-0313 AND M1-0200.
2. DELETED
3. DELETED
4. DELETED
5. 1-PT-0934 THRU 1-PT-0937 ARE TO BE PROVIDED BY WESTINGHOUSE. SEE WESTINGHOUSE DRAWING 8758D39, SHEETS 22 AND 42 FOR PROCESS CONTROL BLOCK DIAGRAM.
6. VALVES ARE WELDED ON THE END CLOSEST TO THE PENETRATIONS AND FLANGED ON THE OPPOSITE END.
7. BLIND FLANGES TO BE INSTALLED DURING PENETRATION LEAK TEST ONLY.
8. DELETED
9. FOR CONTAINMENT RADIATION MONITORING SYSTEM DETAILS SEE TAG NUMBER 1-REK-5502/03/66.
10. DELETED
11. DELETED
12. DELETED
13. RADIATION MONITOR IS SEISMIC CATEGORY AND HAS A DESIGN PRESSURE OF 1 ATMOSPHERE. MONITOR IS BUILT TO MANUFACTURERS STANDARDS.
14. DELETED
15. PENETRATIONS M -0004 AND M -0007 DETAILS TRANSFERRED FROM FLOW DIAGRAM M1-0217.
16. END OF PENETRATION PROVIDED WITH THREADED PLUG FOR HYDRO AND ILRT.
17. DELETED
18. ACCEPTABLE ALTERNATE PENETRATION INSERT X-M -0009 IS APPROVED FOR MODES 5, 6 AND DEFUELED (SEE FDA-2013-000203-01). R

REFERENCES:

M1-0200	MECHANICAL SYMBOLS AND NOTES
M1-0243	FLOW DIAGRAM PLANT GAS SUPPLY SYSTEM NITROGEN SUPPLY
M1-0302	FLOW DIAGRAM VENTILATION SAFEGUARDS AND ELECTRICAL AREA
M1-0313	FLOW DIAGRAM VENTILATION AAP BLDG AND CONTROL BLDG UPS AREA A/C SYSTEMS
S1-0513	RB CONTAINMENT LINER DETAILS SH 3
BRP-PN-RB-001	PENETRATION PNEUMATIC AND HYDRAULIC CONN
BRP-PN-RB-002	PENETRATION PNEUMATIC AND HYDRAULIC CONN
BRP-PN-1-503-004	REACTOR CONTAINMENT PENETRATION AND DETAIL

FSAR FIGURE 9.4-6

TBS DRAWING CREATED ELECTRONICALLY

DRAWING M1-0301 REV CP-10
HAS BEEN SPLIT INTO THE FOLLOWING SHEETS:
M1-0301
M1-0301-A

CLASS I
(NUCLEAR SAFETY-RELATED)
SAFETY CLASS 1 SEISMIC CATEGORY I
SAFETY CLASS 2 CLASS 1E
SAFETY CLASS 3 ASSOCIATED CIRCUITS

LUMINANT
CPNPP
GLEN ROSE, TEXAS

FLOW DIAGRAM
VENTILATION CONTAINMENT

DWG. NO.	SH. NO.	REV.
M1-0301	A	CP-17

$$$$$$$ DATE $$$$$ REF CHK CP-II 06/04/97

me513500.dgn M1-0301-A < FINAL PRINT >

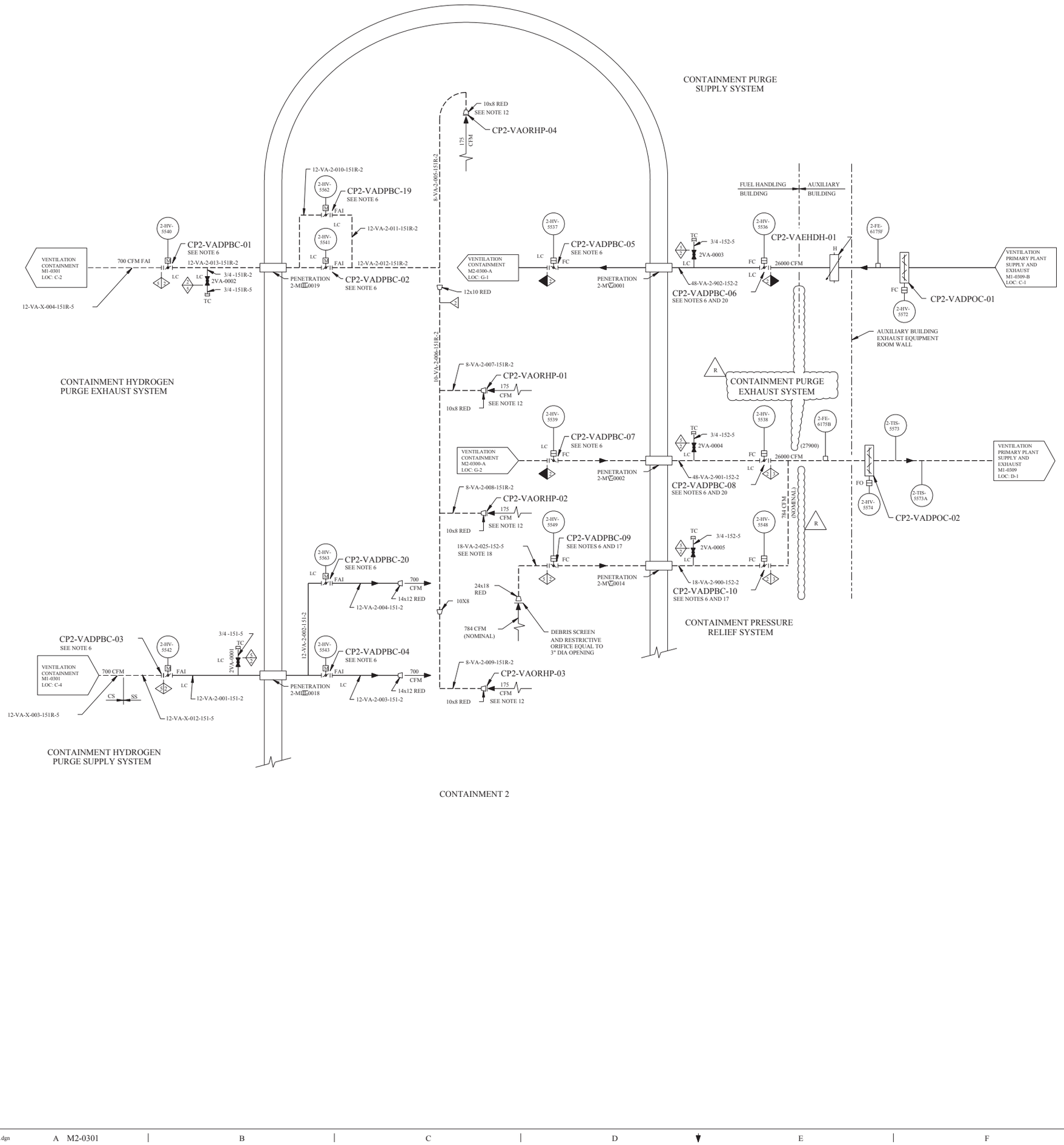

REV	DWN	CHKD	APVD	REMARKS
CP-13	JRMC 08-24 2009	DJL 08-24 2009		THIS DRAWING REVISED TO INCORPORATE DESIGN CHANGE FDA-2009-001372-01-00 PER SK-0002-09-001372-01-00.

NOTES:

1. FOR ABBREVIATIONS AND SYMBOLS SEE DRAWINGS M1-0200 & M1-0313.
2. DELETED
3. THIS DIAGRAM IS A SCHEMATIC REPRESENTATION AND IS INTENDED TO SHOW GENERAL AIR DISTRIBUTION AND FLOW PATHS.
4. BALANCING DAMPERS, REGISTERS, DIFFUSERS, FLEXIBLE CONNECTIONS AND ALL OTHER RELATED ACCESSORIES NOT SHOWN ON THIS DIAGRAM SHALL BE PROVIDED AS INDICATED ON THE HVAC ARRANGEMENT DRAWINGS AND SPECIFICATIONS.
5. DELETED
6. VALVES ARE WELDED ON END CLOSEST TO THE PENETRATIONS AND FLANGED ON THE OPPOSITE END.
7. BLIND FLANGES TO BE INSTALLED DURING PENETRATION LEAK TEST ONLY.
8. DELETED
9. FOR CONTAINMENT RADIATION MONITORING SYSTEM DETAILS SEE GENERAL ATOMIC COMPANY DRAWING ELD 353-1700.
10. DELETED
11. DELETED
12. PROVIDE SUITABLE SIZE ORIFICE PLATE TO BALANCE AIR FLOW. THE ORIFICE PLATE SHALL BE 1/8 INCH THICK MINIMUM AND WELDED TO 8"x10" AIR INTAKES. ORIFICE SIZE MAY VARY FROM 3" TO 8" IN DIAMETER.
13. DELETED
14. RADIATION MONITOR IS SEISMIC CATEGORY 1 AND HAS A DESIGN PRESSURE OF 1 ATMOSPHERE. MONITOR IS BUILT TO MANUFACTURERS STANDARDS.
15. DELETED
16. DELETED
17. VALVES CP2-VADPBC-09 AND CP2-VADPBC-10 ARE LIMITED TO 65° MAX OPEN.
18. LINE 18-VA-2-025-152-5 HAS BEEN QUALIFIED AS SEISMIC CATEGORY 1 BY ANALYSIS.
19. FOR DRAIN FLOW ORIFICE NUMBER AND LINE CONT SEE DWG M2-0225-02 AND 02A LOCATION C, D, E AND F2.
20. A BLIND FLANGE, LOCKED CLOSED TC, PIPE FITTINGS AND CONTAINMENT ISOLATION CAP PER VENDOR DRAWING 4800D186LXI SHT 01 MAY BE USED ON THE OUTBOARD SIDE OF THE CONTAINMENT AIR SUPPLY AND/OR EXHAUST ISOLATION VALVES IF THE PENETRATION FAILS THE LOCAL LEAK RATE TEST.

REFERENCE DRAWINGS:

M1-0200	MECHANICAL SYMBOLS AND NOTES.
M1-0225-02	FLOW DIAGRAM AUXILIARY BUILDING FIRE PROTECTION.
M2-0300	FLOW DIAGRAM VENTILATION CONTAINMENT.
M1-0309 & M1-0309B	FLOW DIAGRAM VENTILATION PRIMARY PLANT SUPPLY AND EXHAUST.
M1-0313	FLOW DIAGRAM VENTILATION AAP BUILDING AND CONTROL BUILDING. UPS AREA A/C SYSTEMS
M2-0301-A	FLOW DIAGRAM VENTILATION CONTAINMENT
BRP-VA-2-AB-001	HEATING & VENTILATION (CONTAINMENT PENETRATIONS)
BRP-VA-2-AB-002	HEATING & VENTILATION (CONTAINMENT PENETRATIONS)
BRP-VA-2-FB-001	HEATING & VENTILATION (CONTAINMENT PENETRATIONS)
BRP-VA-2-RB-001	HEATING & VENTILATION (CONTAINMENT PENETRATIONS)
BRP-VA-2-RB-002	HEATING & VENTILATION (CONTAINMENT PENETRATIONS)
BRP-VA-2-RB-005	HEATING & VENTILATION (CONTAINMENT PENETRATIONS)
BRP-VA-2-RB-007	HEATING & VENTILATION (CONTAINMENT PENETRATIONS)
M1-0301 & M1-0301-A	FLOW DIAGRAM VENTILATION CONTAINMENT.

FSAR FIGURE 9.4-6

THIS DRAWING CREATED ELECTRONICALLY

DRAWING 2323-M2-0301 REV CP-4
HAS BEEN SPLIT INTO THE FOLLOWING SHEETS:
M2-0301
M2-0301-A

CLASS I
(NUCLEAR SAFETY-RELATED)
SAFETY CLASS 1, SAFETY CLASS 2, SAFETY CLASS 3
SEISMIC CATEGORY I
CLASS 1E ASSOCIATED CIRCUITS

LUMINANT
CPNPP
GLEN ROSE, TEXAS

FLOW DIAGRAM
VENTILATION CONTAINMENT

DWG. NO.	SH. NO.	REV.
M2-0301	-	CP-13

REF CKD CP-10 12/19/96

$$$$$$$DATE$$$$$$

me962400.dgn A M2-0301 < FINAL PRINT >

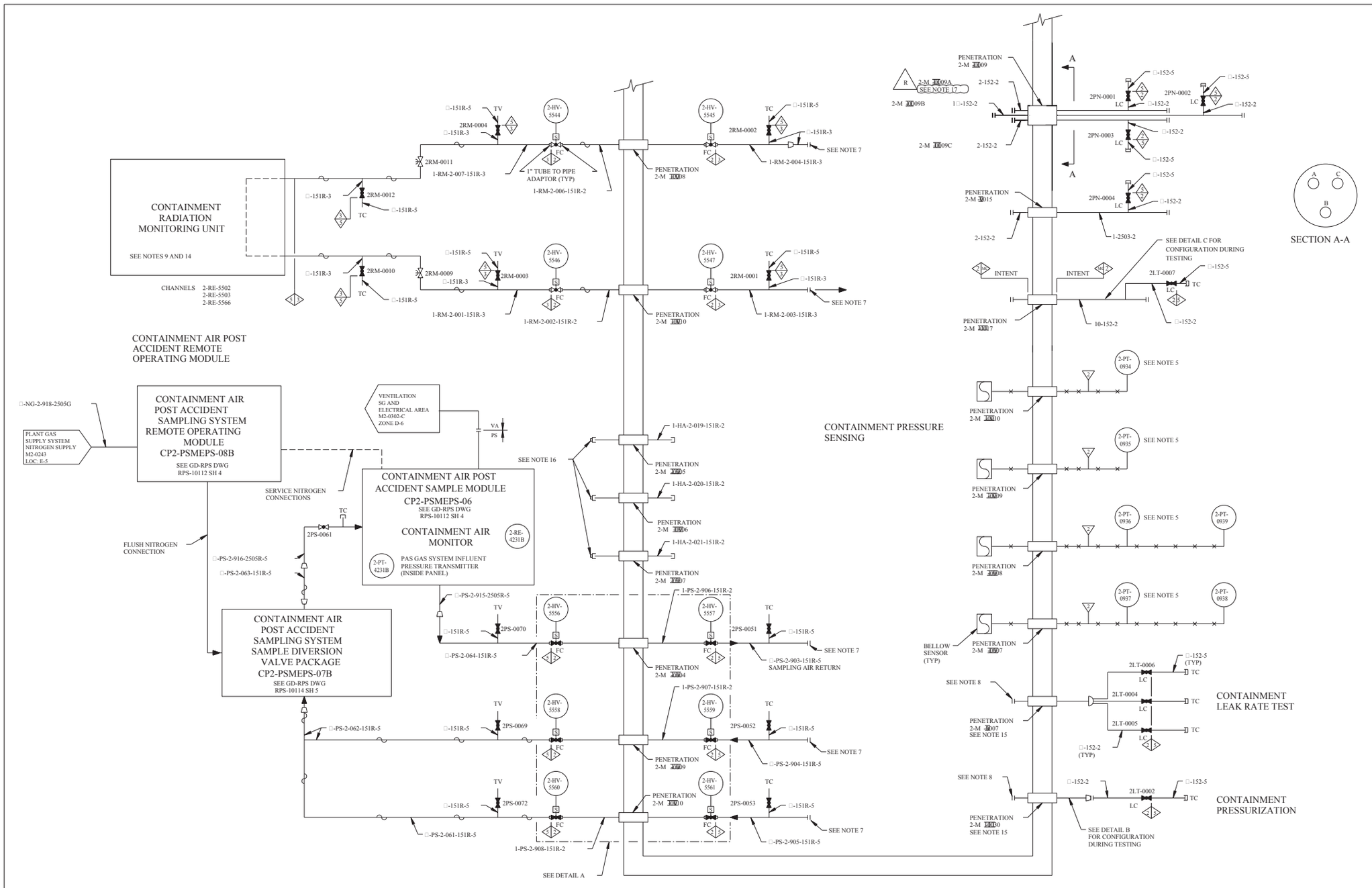

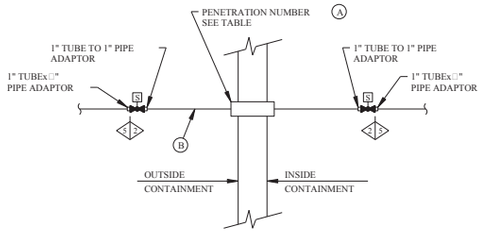

DETAIL A
(C-5)

LINE NUMBERS FOR POST-ACCIDENT SAMPLING SYSTEM CONTAINMENT PENETRATIONS	
PENETRATION NUMBER (A)	LINE NUMBER (B)
M□-0004	1-PS-2-906-151R-2
M□-0009	1-PS-2-907-151R-2
M□-0010	1-PS-2-908-151R-2

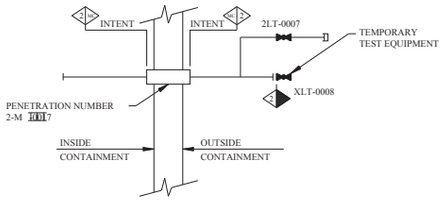

DETAIL C
(F-2)

TO BE USED DURING TESTING ONLY.
CONTAINMENT DEPRESSURIZATION PERFORMED UTILIZING TEMPORARY TEST VALVE XLT-0008.

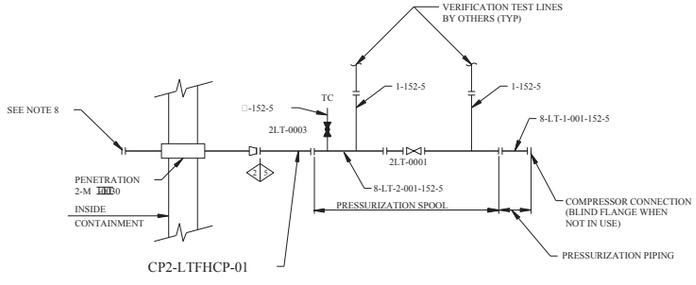

DETAIL B (F-4)

TO BE USED DURING TESTING ONLY

REV	DWN	CHKD	APVD	REMARKS
CP-15	JRMC 03-04-2014	DJL 03-05-2014		THIS DRAWING REVISED TO INCORPORATE DESIGN CHANGE FDA 2013-000203-01-00 PER SK-0002-13-000203-01-00.

NOTES:

1. FOR ABBREVIATIONS AND SYMBOLS SEE DRAWINGS M1-0313 & M1-0200.
2. DELETED
3. DELETED
4. DELETED
5. 2-PT-0934 THRU 2-PT-0937 ARE TO BE PROVIDED BY WESTINGHOUSE. SEE WESTINGHOUSE DRAWING 8768D39, SHEET 22 AND 42 FOR PROCESS CONTROL BLOCK DIAGRAM.
6. DELETED
7. BLIND FLANGES TO BE INSTALLED DURING PENETRATION LEAK TEST ONLY.
8. DELETED
9. FOR CONTAINMENT RADIATION MONITORING SYSTEM DETAILS SEE TAG NUMBER 2-REK-5502/03/66.
10. DELETED
11. DELETED
12. DELETED
13. DELETED
14. RADIATION MONITOR IS SEISMIC CATEGORY AND HAS A DESIGN PRESSURE OF 1 ATMOSPHERE. MONITOR IS BUILT TO MANUFACTURERS STANDARDS.
15. PENETRATIONS M -0007 AND M -0007 DETAILS TRANSFERRED FROM FLOW DIAGRAM M2-0217.
16. END OF PENETRATION PROVIDED WITH THREADED PLUG FOR HYDRO AND ILRT.
17. ACCEPTABLE ALTERNATE PENETRATION INSERT X-M -0009 IS APPROVED FOR MODES 5, 6 AND DEFUELED (SEE FDA-2013-000203-01). R

REFERENCE DRAWINGS:

M1-0200	MECHANICAL SYMBOLS AND NOTES.
M2-0300 & M2-0300-A	FLOW DIAGRAM VENTILATION CONTAINMENT.
M1-0313	FLOW DIAGRAM VENTILATION AAP BUILDING. AND CONTROL BUILDING. UPS AREA A/C SYSTEMS
M1-0301 & M1-0301-A	FLOW DIAGRAM VENTILATION CONTAINMENT SHEET 2.
BRP-PN-RB-001	PENETRATION (PNEUMATIC & HYDRAULIC CONN)
BRP-PN-RB-002	PENETRATION (PNEUMATIC & HYDRAULIC CONN)
BRP-HA-RB-004	PENETRATION (PNEUMATIC & HYDRAULIC CONN)
BRP-HA-RB-005	PENETRATION (PNEUMATIC & HYDRAULIC CONN)
BRP-HA-RB-006	PENETRATION (PNEUMATIC & HYDRAULIC CONN)
M1-0243	PLANT GAS SUPPLY SYSTEM, NITROGEN SUPPLY
M2-0302	VENTILATION SG AND ELECTRICAL

FSAR FIGURE 9.4-6

THIS DRAWING CREATED ELECTRONICALLY

DRAWING 2323-M2-0301 REV CP-4
HAS BEEN SPLIT INTO THE FOLLOWING SHEETS:
M2-0301
M2-0301-A

CLASS I
(NUCLEAR SAFETY-RELATED)
SAFETY CLASS 1 SEISMIC CATEGORY I
SAFETY CLASS 2 CLASS 1E
SAFETY CLASS 3 ASSOCIATED CIRCUITS

LUMINANT
CPNPP
GLEN ROSE, TEXAS

FLOW DIAGRAM
VENTILATION CONTAINMENT

DWG. NO. M2-0301 | SH. NO. A | REV. CP-15

$$$$$$$DATE$$$$$$$ REF CKD CP-10 06/04/97

me516100.dgn A M2-0301-A B C D E F G < FINAL PRINT > H

EXHAUST FANS FOR SERVICE WATER PUMPS
(TOTAL OF FOUR SETS OF TWO FANS EACH)

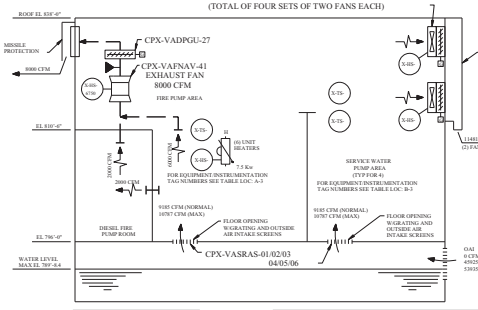

UNIT HEATERS	LO-LO TEMP THERMOSTAT
TAG NUMBER	X-15-
CPX-VAEHUH-04	6759
CPX-VAEHUH-05	6760
CPX-VAEHUH-06	6761
CPX-VAEHUH-07	6762
CPX-VAEHUH-08	6763
CPX-VAEHUH-09	6764

EXHAUST FANS				HI TEMP THERMOSTAT	DAMPER
TAG NUMBER	ACFM	X-15-	X-75-	X-75-	TAG NUMBER
CPX-VAFNRV-02	6525	6751	6755	6759A	CPX-VADPSW-02
CPX-VAFNRV-03	6525	6752			CPX-VADPSW-03
CPX-VAFNRV-04	6525	6753	6756	6760A	CPX-VADPSW-04
CPX-VAFNRV-05	6525	6754			CPX-VADPSW-05
CPX-VAFNRV-06	6525	6755	6757	6761A	CPX-VADPSW-06
CPX-VAFNRV-07	6525	6756			CPX-VADPSW-07
CPX-VAFNRV-08	6525	6757	6758	6762A	CPX-VADPSW-08
CPX-VAFNRV-09	6525	6758			CPX-VADPSW-09

SERVICE WATER INTAKE STRUCTURE VENTILATION SYSTEM
SAFETY CLASS 3 (EXCEPT AS NOTED)

EMERGENCY EXHAUST FAN CPX-VAFNWV-14

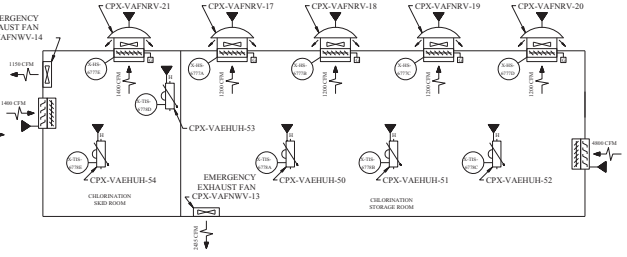

CIRCULATING WATER INTAKE STRUCTURE - CHLORINATION BUILDING VENTILATION SYSTEM
NON-SAFETY
(NOT DESIGN VALIDATED BY EBASCO)

EMERGENCY EXHAUST FAN CPX-VAFNWV-10

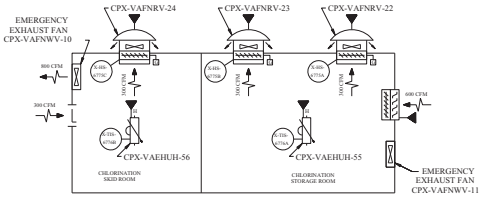

SERVICE WATER INTAKE STRUCTURE - CHLORINATION BUILDING VENTILATION SYSTEM
NON-SAFETY
(NOT DESIGN VALIDATED BY EBASCO)

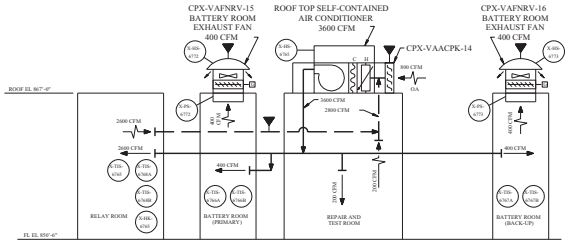

SWITCHYARD RELAY HOUSE A/C SYSTEM
NON-SAFETY
(NOT DESIGN VALIDATED BY EBASCO)

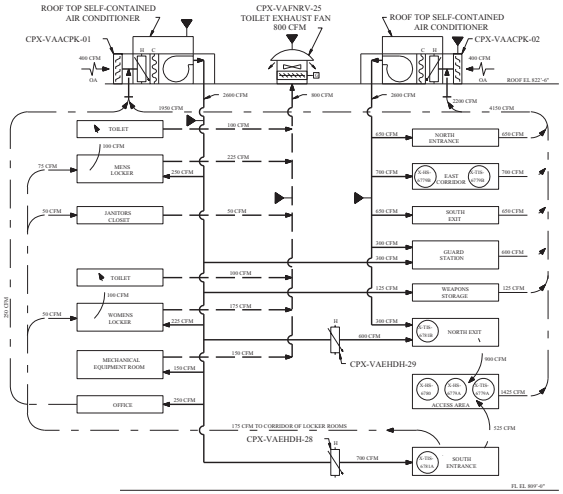

GUARD HOUSE A/C SYSTEM
NON-SAFETY
(NOT DESIGN VALIDATED BY EBASCO)

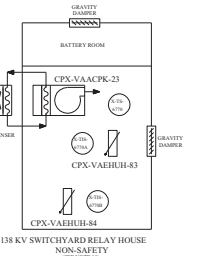

138 KV SWITCHYARD RELAY HOUSE
NON-SAFETY
(SEE NOTE 10)

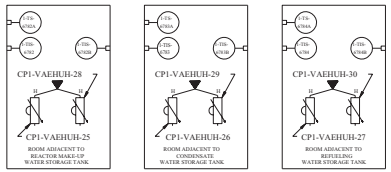

REV	DESCRIPTION	REMARKS
09-17	NONE	THIS DRAWING REVISED TO INCORPORATE DESIGN CHANGE TXX-3941 (03/10/10) (CP-PDC 08-2026) (10/29/09) (CR-08-30156)

NOTES:

1. FOR ABBREVIATIONS AND SYMBOLS SEE DRAWINGS M1-0313 AND M1-0200.
2. DELETED
3. THIS DIAGRAM IS A SCHEMATIC REPRESENTATION AND IS INTENDED TO SHOW GENERAL AIR DISTRIBUTION AND FLOW PATHS.
4. BALANCING DAMPERS, REGISTERS, DIFFUSERS, FLEXIBLE CONNECTIONS AND ALL OTHER RELATED ACCESSORIES NOT SHOWN ON THIS DIAGRAM SHALL BE PROVIDED AS INDICATED ON THE HVAC ARRANGEMENT DRAWINGS AND SPECIFICATIONS.
5. IN THE SERVICE WATER INTAKE STRUCTURE, ANY OPERATING FAN DRAWS AIR EQUALLY THRU ALL FIVE AIR INTAKES AT FLOOR.
6. AIR FLOW QUANTITIES SHOWN ARE BASED ON A DENSITY OF 0.075 LB/FT³ OCCURRING AT THE STANDARD CONDITION OF DRY AIR AT 70°F AND 29.92 IN. BAROMETRIC PRESSURE. ACTUAL FAN CFM WILL VARY WITH DENSITY. AIR FLOW RATES BASED ON DENSITY AT DESIGN CONDITIONS.
7. MAX CFM IS BASED ON ALL EXHAUST FANS, INCLUDING DIESEL FIRE PUMP ROOM EXHAUST FAN, RUNNING.
8. SWIS EXHAUST FANS CPX-VAFNWV-06,07,08,09 TO BE POWERED FROM UNIT 1 EMERGENCY POWER SOURCE AND CPX-VAFNWV-02,03,04,05 TO BE POWERED FROM UNIT 2 EMERGENCY POWER SOURCE (TWO ON TRAIN A AND TWO ON TRAIN B FOR EACH UNIT).
9. EXHAUST FAN CPX-VAFNWV-11 HAS BEEN DISCONNECTED AND IS ABANDONED IN PLACE.
10. OWNERSHIP OF THIS BUILDING BELONGS TO GLEN ROSE TRANSMISSION, REFER TO E-46763 SHEETS 1 AND 2 FOR DETAIL INFORMATION.
11. FOR THE NON-SAFETY VENTILATION SYSTEMS, THE AIR FLOW RATES SHOWN ARE ORIGINAL DESIGN VALUES FOR INITIAL FLOW BALANCING AND DO NOT REPRESENT AS-BUILT AIR FLOW QUANTITIES. THE AIR FLOW RATES SHOWN ARE FOR DESIGN DURING NORMAL OPERATION AND TO ENSURE THE DIRECTION OF AIR FLOW IS AS SHOWN.

REFERENCES:

1. M1-0313 FLOW DIAGRAM-VENTILATION AAP BLDG AND CONTROL BLDG UPS AREA A/C SYSTEMS
2. M1-0200 MECHANICAL SYMBOLS AND NOTES

FSAR FIGURE 9.4-7

THIS DRAWING IS CONTROLLED ELECTRONICALLY

CLASS I
(NUCLEAR SAFETY-RELATED)
SAFETY CLASS 1 SEISMIC CATEGORY I
SAFETY CLASS 2 CLASS 1E
SAFETY CLASS 3 QUALIFIED CIRCUITS

TXU POWER
CPSES
GLEN ROSE, TEXAS

FLOW DIAGRAM - VENTILATION
SERVICE WATER INTAKE STRUCTURE
AND MISCELLANEOUS BUILDINGS

DRAWING NUMBER	REV. NO.	REV.
M1-0312	-	CP-17

SHEET 1 OF 1

rac515700.dgn M1-0312

REV	DWN	CHKD	APVD	REMARKS
CP-20	MM 03-01-2016	DLK 30-01-2016	MHF 30-07-2016	THIS DRAWING REVISED TO INCORPORATE AN EDITORIAL CHANGE PER A1-CR-2014-007886-5.

NOTES:

1. FOR ABBREVIATIONS AND SYMBOLS SEE DRAWINGS M1-0313 AND M1-0200.
2. DELETED
3. THIS DIAGRAM IS A SCHEMATIC REPRESENTATION AND IS INTENDED TO SHOW GENERAL AIR DISTRIBUTION AND FLOW PATHS.
4. BALANCING DAMPERS, REGISTERS, DIFFUSERS, FLEXIBLE CONNECTIONS AND ALL OTHER RELATED ACCESSORIES NOT SHOWN ON THIS DIAGRAM SHALL BE PROVIDED AS INDICATED ON THE HVAC ARRANGEMENT DRAWING AND SPECIFICATIONS.
5. DELETED
6. THIS FLOW DIAGRAM IS COMMON FOR UNITS 1 AND 2 ALL UNIT 2 EQUIPMENT SHOWN ON THIS FLOW DIAGRAM WILL BE INSTALLED WITH UNIT 1 EQUIPMENT.
7. THE UNCONTROLLED ACCESS AREA WILL BE MAINTAINED AT ATMOSPHERIC PRESSURE.
8. FOR LOGIC OF CHANNEL X-TIC-6086 SEE ICD M1-2307-06.
9. DELETED
10. AIR FLOW QUANTITIES SHOWN ARE BASED ON A DENSITY OF 0.075 LB/FT OCCURING AT THE STANDARD CONDITION OF DRY AIR AT 70□F AND 29.92" HG BAROMETRIC PRESSURE. QUANTITIES IN PARENTHESES ARE ACTUAL AIR FLOW RATES BASED ON DENSITY AT DESIGN CONDITIONS.
11. DAMPER NUMBER CPX-VADPBC-57 IS RETAGGED FROM ORIGINAL TAG NUMBER CP2-VADPBC-25 (SPARE PER ECR-1400). DAMPER NUMBER CPX-VADPBC-58 IS RETAGGED FROM ORIGINAL TAG NUMBER CP2-VADPBC-28 (SPARE PER ECR-1400)
12. DELETED
13. DELETED
14. DELETED
15. IT IS ACCEPTABLE TO REMOVE CPX-VADPGU-11 OR CPX-VADPGU-12 FOR MAINTENANCE AND INSTALL A BLIND FLANGE ON FAN SIDE AND EXHAUST DUCT SIDE. THE SYSTEM REQUIREMENTS (COOLING REQUIRED) WILL HAVE TO BE EVALUATED AT THE TIME AS TO ADEQUATE FLOW PRIOR TO TAKING ONE FAN OUT OF SERVICE. BLIND TO BE SUFFICIENT TO HOLD PRESSURE. A SMALL GUSSET (EXAMPLE 2x2 ANGLE FOR SHEET METAL BLANK) IS ADVISED ON THE BLIND TO PREVENT EXCESSIVE DISTORTION. BLIND THICKNESS SHOULD BE SAME AS DUCT OR THICKER. WEIGHT OF BLIND NOT TO EXCEED WEIGHT OF DAMPER. MATERIALS OTHER THAN METAL ARE ACCEPTABLE (i.e. PLYWOOD). MINIMUM OF 4 BOLTS ARE REQUIRED TO HOLD THE BLIND IN PLACE. SUPPORT THE FAN SIDE OF THE PLENUM AS REQUIRED TO AVOID EXCESS NOZZLE LOADS ON THE FAN. FLOOR JACK STAND IS ADEQUATE. (DCN 12626)
16. FOR THE NON-SAFETY VENTILATION SYSTEMS, THE AIR FLOW RATES SHOWN ARE ORIGINAL DESIGN VALUES FOR INITIAL FLOW BALANCING AND DO NOT REPRESENT AS-BUILT. AIR FLOW IS BALANCED TO MAINTAIN ROOM TEMPERATURES WITHIN DESIGN DURING NORMAL OPERATION AND TO ENSURE THE DIRECTION OF AIR FLOW IS AS SHOWN.

REFERENCES:

M1-0200	MECHANICAL SYMBOLS AND NOTES
M1-0305-A	FLOW DIAGRAM VENTILATION UNCONTROLLED AND BATTERY ROOMS
M1-0307	FLOW DIAGRAM VENTILATION CHILLED WATER SYSTEM
M1-0313	FLOW DIAGRAM VENTILATION AAP BLDG AND CONTROL BLDG UPS AREA A/C SYSTEMS

FSAR FIGURE 9.4-8

THIS DRAWING CREATED ELECTRONICALLY

DRAWING M1-0305 REV CP-9
HAS BEEN SPLIT INTO THE FOLLOWING SHEETS:
M1-0305
M1-0305-A

CLASS I
(NUCLEAR SAFETY-RELATED)
SAFETY CLASS 1 — SEISMIC CATEGORY I
SAFETY CLASS 2 — CLASS 1E
SAFETY CLASS 3 — ASSOCIATED CIRCUITS

LUMINANT
CPNPP
GLEN ROSE, TEXAS

FLOW DIAGRAM
VENTILATION
UNCONTROLLED AND BATTERY ROOMS

DWG. NO. M1-0305 | SH. NO. - | REV. CP-20

me514700.dgn A M1-0305 | FINAL PRINT

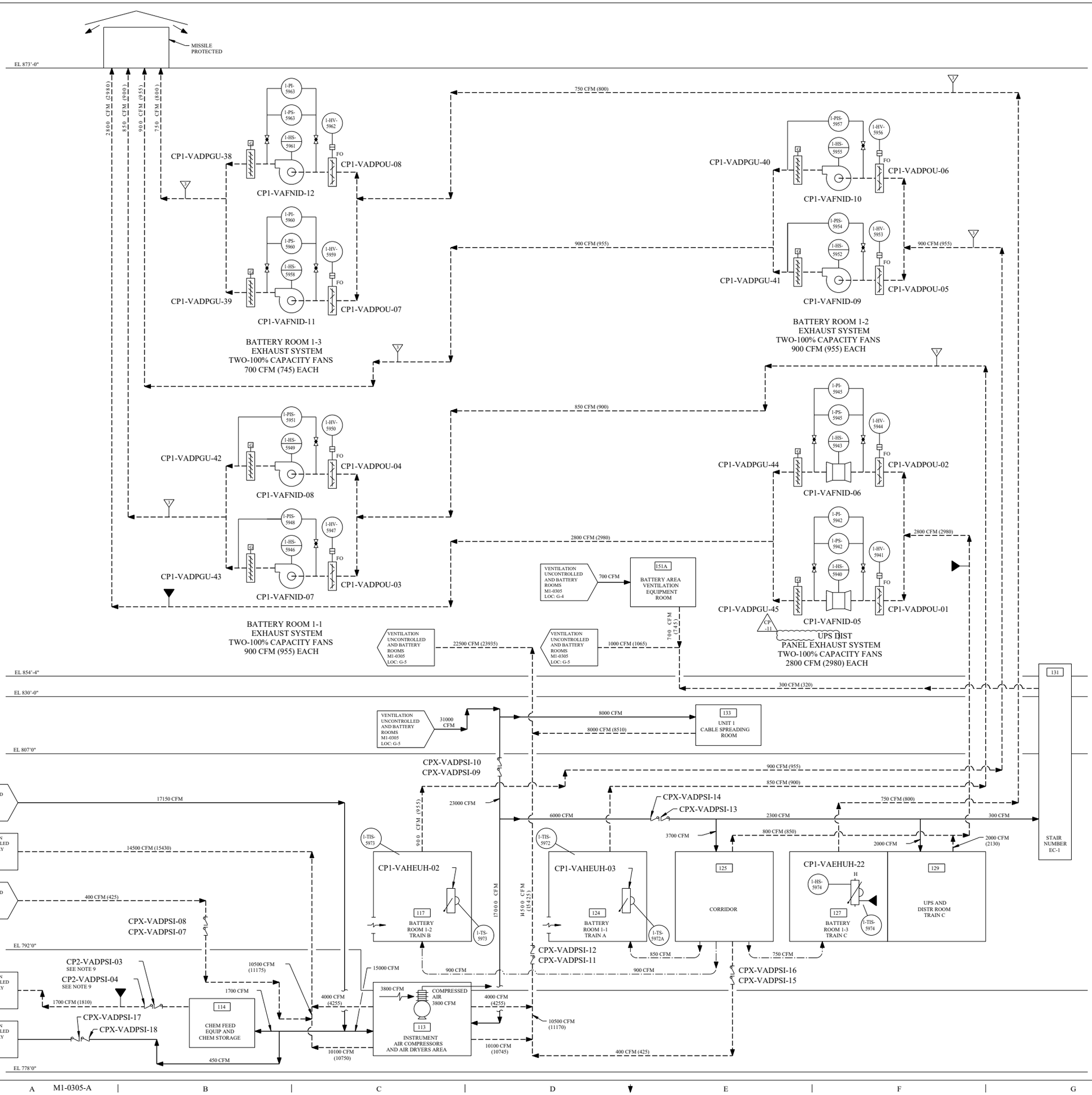

REV.	DWN	CHK	APVD	REMARKS
CP-11	MM 03-01-2016	DLK 03-03-2016	MHF 03-07-2016	THIS DRAWING REVISED TO INCORPORATE AN EDITORIAL CHANGE PER AI-CR-2014-007886-5.

NOTES:

1. FOR ABBREVIATIONS AND SYMBOLS SEE DRAWINGS M1-0313 AND M1-0200.
2. THIS DIAGRAM IS A SCHEMATIC REPRESENTATION AND IS INTENDED TO SHOW GENERAL AIR DISTRIBUTION AND FLOW PATHS.
3. BALANCING DAMPERS, REGISTERS, DIFFUSERS, FLEXIBLE CONNECTIONS AND ALL OTHER RELATED ACCESSORIES NOT SHOWN ON THIS DIAGRAM SHALL BE PROVIDED AS INDICATED ON THE HVAC ARRANGEMENT DRAWING AND SPECIFICATIONS.
4. THIS FLOW DIAGRAM IS COMMON FOR UNITS 1 AND 2 ALL UNIT 2 EQUIPMENT SHOWN ON THIS FLOW DIAGRAM WILL BE INSTALLED WITH UNIT 1 EQUIPMENT.
5. THE UNCONTROLLED ACCESS AREA WILL BE MAINTAINED AT ATMOSPHERIC PRESSURE.
6. ALL EXHAUST DUCTWORK IN THE CHEMICAL FEED EQUIPMENT AND CHEMICAL STORAGE ROOM IS CLASSIFIED NNS AND NON-SEISMIC.
7. AIR FLOW QUANTITIES SHOWN ARE BASED ON A DENSITY OF 0.075 LB/FT OCCURING AT THE STANDARD CONDITION OF DRY AIR AT 70□F AND 29.92" HG BAROMETRIC PRESSURE. QUANTITIES IN PARENTHESES ARE ACTUAL AIR FLOW RATES BASED ON DENSITY AT DESIGN CONDITIONS.
8. FOR THE NON-SAFETY VENTILATION SYSTEMS, THE AIR FLOW RATES SHOWN ARE ORIGINAL DESIGN VALUES FOR INITIAL FLOW BALANCING AND DO NOT REPRESENT AS-BUILT. AIR FLOW IS BALANCED TO MAINTAIN ROOM TEMPERATURES WITHIN DESIGN DURING NORMAL OPERATION AND TO ENSURE THE DIRECTION OF AIR FLOW IS AS SHOWN.
9. POSITION SWITCHES 2-ZS-5964A AND B MOUNTED ON DAMPERS CP2-VADPSI-03 AND 04 RESPECTIVELY ARE SPARED IN PLACE. SEE DRAWING E2-0066-47.

REFERENCES:

M1-0200	MECHANICAL SYMBOLS AND NOTES
M1-0305	FLOW DIAGRAM VENTILATION UNCONTROLLED AND BATTERY ROOMS
M1-0313	FLOW DIAGRAM VENTILATION AAP BLDG AND CONTROL BLDG UPS AREA A/C SYSTEMS

DRAWING M1-0305 REV CP-9
HAS BEEN SPLIT INTO THE FOLLOWING SHEETS:
M1-0305
M1-0305-A

CLASS I
(NUCLEAR SAFETY-RELATED)

SAFETY CLASS 1	SEISMIC CATEGORY I
SAFETY CLASS 2	CLASS 1E
SAFETY CLASS 3	ASSOCIATED CIRCUITS

LUMINANT
CPNPP
GLEN ROSE, TEXAS

FLOW DIAGRAM
VENTILATION
UNCONTROLLED AND BATTERY ROOMS

DWG. NO. M1-0305 | SH. NO. A | REV. CP-11

FSAR FIGURE 9.4-8

THIS DRAWING CREATED ELECTRONICALLY

REF CKD 7-10-98 CP-7

mc571600.dgn A M1-0305-A B C D E F G FINAL PRINT H

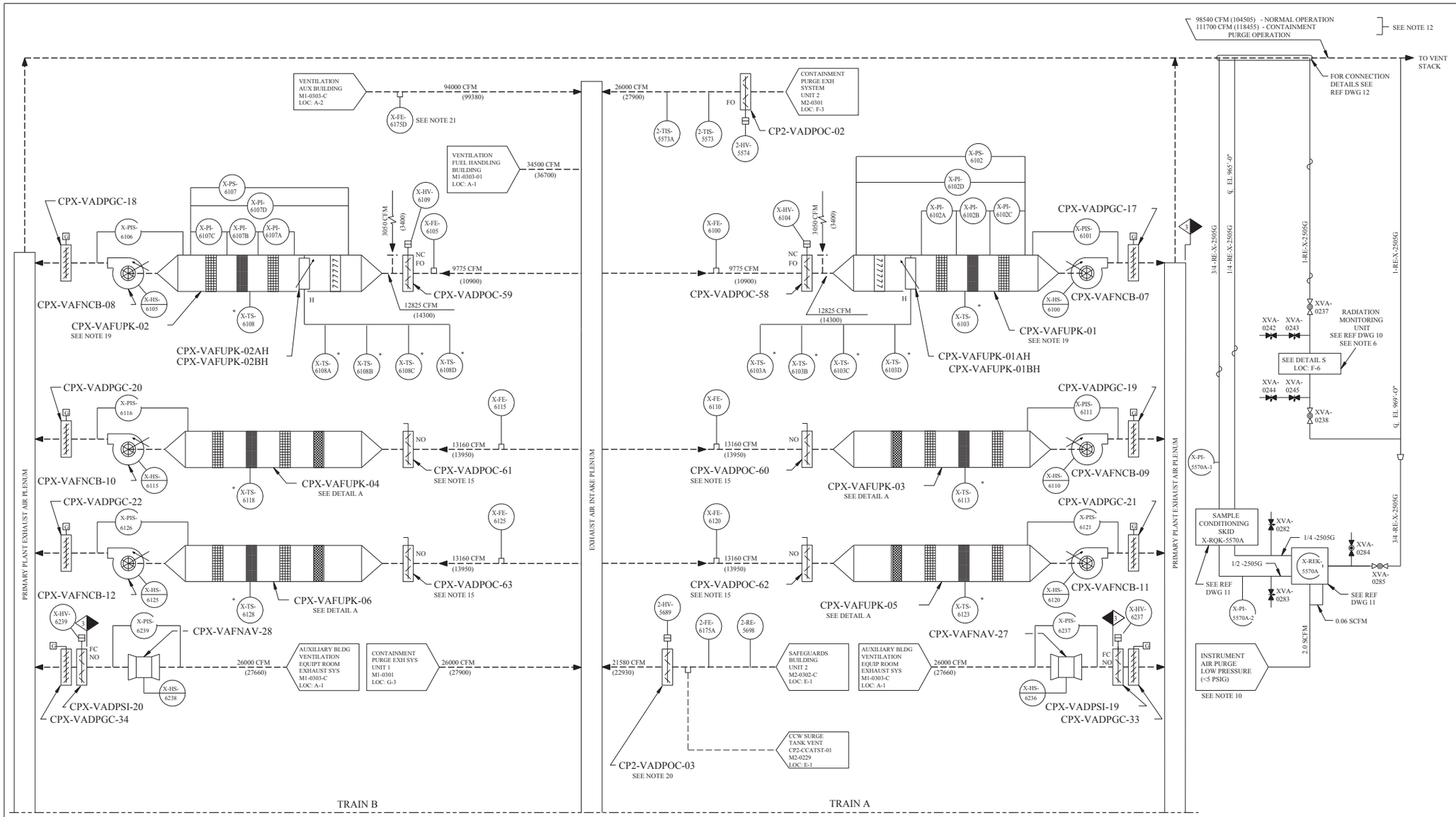

PRIMARY PLANT VENTILATION EXHAUST SYSTEM
SAFETY CLASS 3 (EXCEPT AS NOTED)

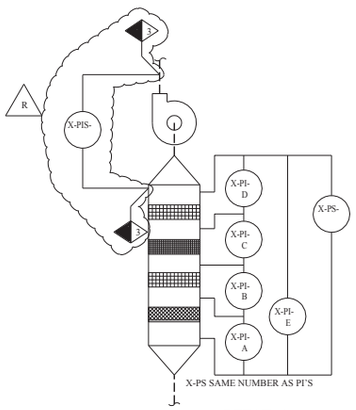

DETAIL A
TYPICAL FOR CPX-VAFUPK-03,04,05,06
SEE TABLE

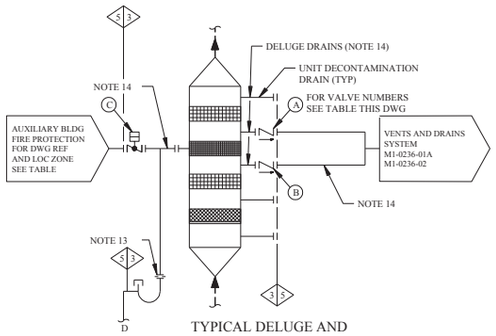

TYPICAL DELUGE AND DRAIN CONNECTIONS FOR NON ESF FILTRATION UNITS

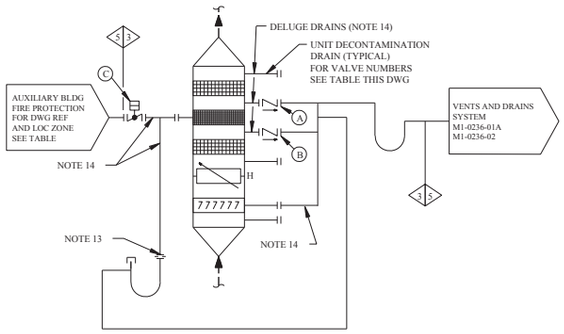

TYPICAL DELUGE AND DRAIN CONNECTIONS FOR ESF FILTRATION UNITS CPX-VAFUPK-01 AND CPX-VAFUPK-02

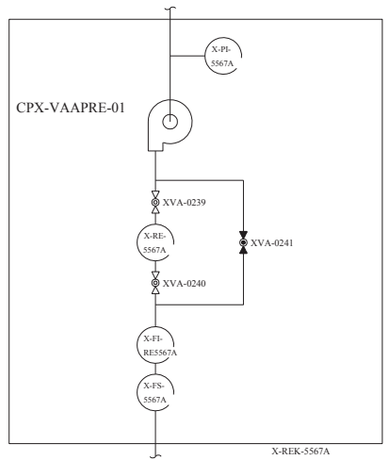

DETAIL S

VALVE AND INSTRUMENT TABLE

FILTRATION UNIT NUMBER (SEE NOTE 17)	DELUGE DRAIN VALVES		DELUGE SUPPLY		PRESSURE SWITCHES AND PRESSURE INDICATORS A, B, C, D AND E	PRESSURE INDICATING SWITCH
	(A)	(B)	(C)	DRAWING REF: AND ZONE LOCATION		
CPX-VAFUPK-01	CPX-VADPCK-01	CPX-VADPCK-02	XFP-0653	M1-0225-02A LOC: D-1	SEE DIAGRAM	SEE DIAGRAM
CPX-VAFUPK-02	CPX-VADPCK-03	CPX-VADPCK-04	XFP-0644	M1-0225-02A LOC: D-2	SEE DIAGRAM	SEE DIAGRAM
CPX-VAFUPK-03	CPX-VADPCK-05	CPX-VADPCK-06	XFP-0652	M1-0225-02A LOC: C-1	6112	6111
CPX-VAFUPK-04	CPX-VADPCK-07	CPX-VADPCK-08	XFP-0643	M1-0225-02A LOC: C-2	6117	6116
CPX-VAFUPK-05	CPX-VADPCK-09	CPX-VADPCK-10	XFP-0651	M1-0225-02A LOC: B-1	6122	6121
CPX-VAFUPK-06	CPX-VADPCK-11	CPX-VADPCK-12	XFP-0642	M1-0225-02A LOC: B-2	6127	6126

REV	DWN	CHK'D	APV'D	REMARKS
CP-30	MM 01-09 2006	DLE 01-09 2006		THIS DRAWING REVISED TO INCORPORATE DESIGN CHANGE FDA-2003-002423-01-00 PER SK-0007-03-002423-01-00.

NOTES:

1. FOR HVAC ABBREVIATIONS AND SYMBOLS SEE DRAWINGS M1-0313 AND M1-0200.
2. DELETED
3. THIS DIAGRAM IS A SCHEMATIC REPRESENTATION AND IS INTENDED TO SHOW GENERAL AIR DISTRIBUTION AND FLOW PATHS.
4. BALANCING DAMPERS, REGISTERS, DIFFUSERS, FLEXIBLE CONNECTIONS AND ALL OTHER RELATED ACCESSORIES NOT SHOWN ON THIS DIAGRAM SHALL BE PROVIDED AS INDICATED ON THE HVAC ARRANGEMENT DRAWINGS AND SPECIFICATIONS.
5. THIS FLOW DIAGRAM IS COMMON FOR UNITS 1 AND 2.
6. FOR LOGIC OF CHANNEL NUMBER X-RE-5567A, X-RE-5567B, X-RE-5570A AND X-RE-5570B SEE ICD M1-2301-10.
7. IN LINE AIR FLOW ELEMENTS ARE PROVIDED TO MEASURE AIR FLOW THRU DUCTS. MANUAL ADJUSTMENT OF THE INLET VANES ON EXHAUST FANS IS METHOD OF CONTROLLING FLOW. INSTRUMENT CONNECTIONS ARE PROVIDED WITH FLOW ELEMENTS. FLOW ELEMENTS 1-FE-6175B AND 1-FE-6175F ARE SHOWN ON DRAWING M1-0301 FLOW ELEMENTS 2-FE-6175B AND 2-FE-6175F ARE SHOWN ON M2-0301. FLOW ELEMENT X-FE-6175C IS SHOWN ON DRAWING M1-0301-01.
8. DELETED
9. THREE ISOKINETIC NOZZLES ARE PROVIDED AT REFERENCE ELEVATION.
10. FOR INSTRUMENT PURGE LOW PRESSURE (<5 PSIG) CLEAN DRY PURGE GAS FLOW RATE 2.0 SCFM AND 0.06 SCFM FOR EACH MONITOR.
11. MIN SLOPE 1/4 " : 12" TOWARD ALL MONITORS.
12. AIR FLOW THRU VENT STACK IS BASED ON THE MAXIMUM CAPACITY OF THE OPERATING UNITS.
13. FOR DRAIN FLOW ORIFICE NUMBERS AND LINE CONTINUATION SEE DRAWING M1-0225-02 AND 02A, LOC: C, D, E AND F-2.
14. NOT WITHIN ASME CODE BOUNDARY.
15. MANUAL OPERATION (DISCONNECTED OPERATOR).
16. AIR FLOW QUANTITIES SHOWN ARE BASED ON A DENSITY OF 0.075 LB/FT ^{3} OCCURRING AT THE STANDARD CONDITION OF DRY AIR AT 70°F AND 29.92" HG BAROMETRIC PRESSURE. QUANTITIES IN PARENTHESES ARE ACTUAL AIR FLOW RATES BASED ON DENSITY AT DESIGN CONDITIONS.
17. FILTRATION UNITS CPX-VAFUPK-01,02,15,16 ARE ESF. FILTRATION UNITS CPX-VAFUPK-03,04,05,06,07,08,09 , AND CPX-VAFUPK-10,11,12,13,14 ARE NON ESF.
18. * SHOWS COMPONENT IS BY VENDOR.
19. FILTRATION UNIT MAXIMUM AIR FLOW CAPACITY OF 15,000 CFM IS NOT TO BE EXCEEDED AT ALL MODES AND CONDITIONS.
20. DAMPER ABANDONED IN-PLACE (IN OPEN POSITION). ALL AIR CONNECTIONS ARE CLOSED AND ELECTRICAL CONNECTIONS ARE DISCONNECTED.
21. AIR EQUALIZER IS REMOVED, STATIC AND TOTAL PRESSURE SENSORS ARE INSTALLED.
22. THE AIR FLOW RATES SHOWN ARE ORIGINAL VALUES FOR INITIAL FLOW BALANCING AND DO NOT REPRESENT AS-BUILT AIR FLOW. IS BALANCED TO MAINTAIN ROOM TEMPERATURES WITHIN DESIGN DURING NORMAL OPERATION AND TO ENSURE THE DIRECTION OF AIR FLOW IS AS SHOWN.

REFERENCES:

1.	M1-0313	FLOW DIAGRAM - VENTILATION AAP BLDG AND CONTROL BLDG UPS AREA A/C SYSTEMS
2.	M1-0200	MECHANICAL DRAWING NOTES AND SYMBOLS
3.	M1-0301	FLOW DIAGRAM - VENTILATION CONTAINMENT
4.	M1-0225-02A	FLOW DIAGRAM - AUXILIARY BUILDING FIRE PROTECTION
5.	M1-0303-C	FLOW DIAGRAM - VENTILATION AUXILIARY BUILDING
6.	M1-0303-01	FLOW DIAGRAM - VENTILATION FUEL HANDLING BUILDING
7.	M2-0302	FLOW DIAGRAM - VENTILATION SAFEGUARDS AND ELECTRICAL AREA
8.	M2-0301	FLOW DIAGRAM - VENTILATION CONTAINMENT
9.	M1-0236-01A M1-0236-02	FLOW DIAGRAM - VENTS AND DRAINS SYSTEM
10.	FLO-353-1700	GENERAL ATOMIC-OUTLINE AND FLOW DIAGRAM
11.	0366-1600 0366-2000	GENERAL ATOMIC SAMPLE CONDITIONING SKID SAMPLE DETECTION SKID
12.	0353-5100	GENERAL ATOMIC - ISOKINETIC NOZZLE PROBE INSTALLATION (WRGM)
13.	M1-0309-A	FLOW DIAGRAM - VENTILATION PRIMARY PLANT SUPPLY AND EXHAUST
14.	M1-0309-B	FLOW DIAGRAM - VENTILATION PRIMARY PLANT SUPPLY AND EXHAUST

FSAR FIGURE 9.4-9

THIS DRAWING CREATED ELECTRONICALLY

DRAWING M1-0309 REV CP-9
HAS BEEN SPLIT INTO THE FOLLOWING SHEETS:
M1-0309
M1-0309-A
M1-0309-B

CLASS I
(NUCLEAR SAFETY-RELATED)
SAFETY CLASS 1
SAFETY CLASS 2
SAFETY CLASS 3
SEISMIC CATEGORY I
CLASS 1E
ASSOCIATED CIRCUITS

LUMINANT
CPSES
GLEN ROSE, TEXAS

FLOW DIAGRAM
VENTILATION PRIMARY PLANT
SUPPLY AND EXHAUST

DWG. NO. M1-0309 | SH. NO. - | REV. CP-30

me677600.dgn A M1-0309 B C D E F G FINAL PRINT H

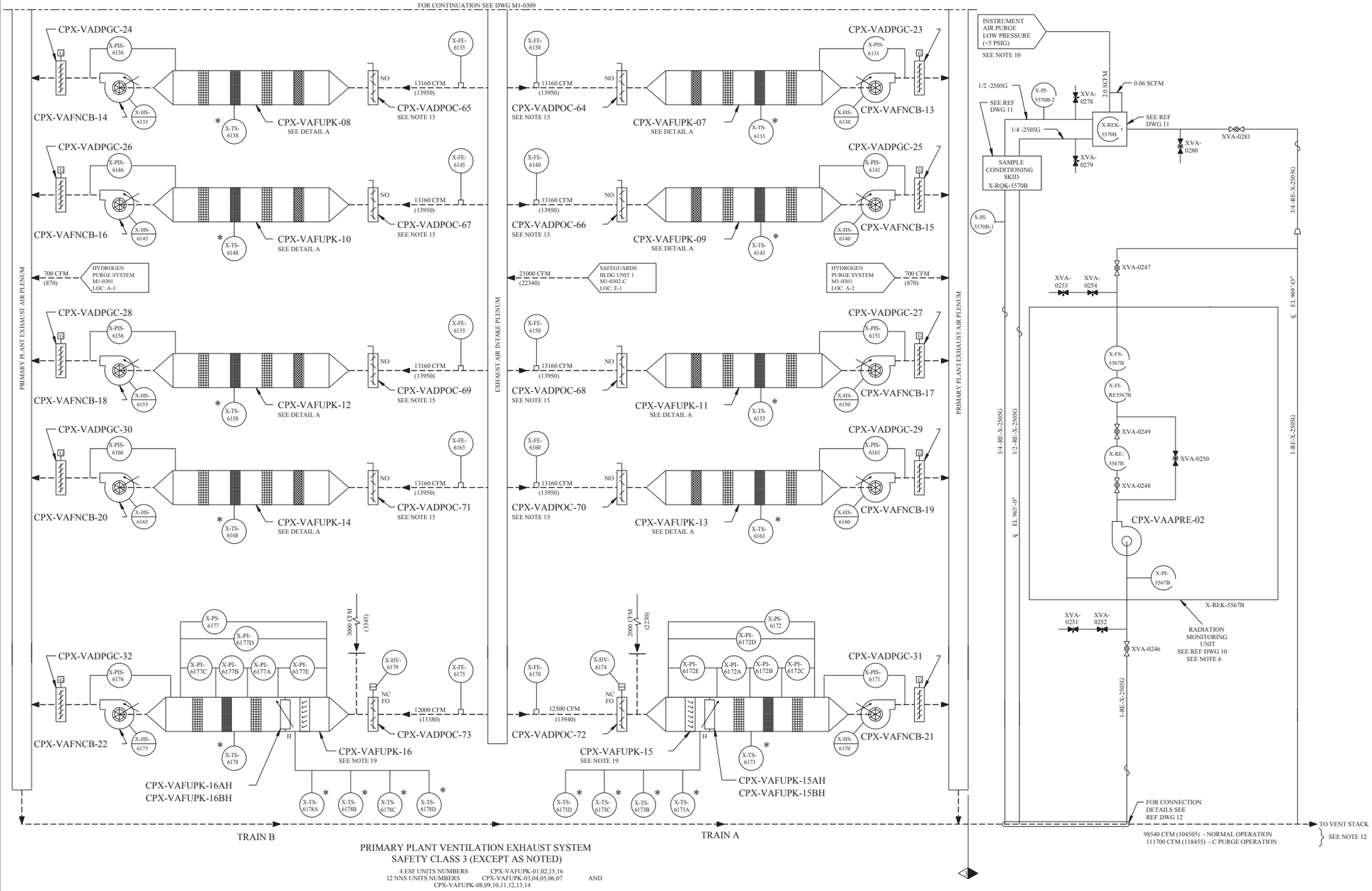

REV	DWN	CHK	APVD	REMARKS
CP-20	MM 01-09 2006	DLE 01-09 2006		THIS DRAWING REVISED TO INCORPORATE DESIGN CHANGE FDA-2003-002423-01-00 PER SK-0008-03-002423-01-00.

NOTES:

1. FOR HVAC ABBREVIATIONS AND SYMBOLS SEE DRAWINGS M1-0313 AND M1-0200.
2. DELETED
3. THIS DIAGRAM IS A SCHEMATIC REPRESENTATION AND IS INTENDED TO SHOW GENERAL AIR DISTRIBUTION AND FLOW PATHS.
4. BALANCING DAMPERS, REGISTERS, DIFFUSERS, FLEXIBLE CONNECTIONS AND ALL OTHER RELATED ACCESSORIES NOT SHOWN ON THIS DIAGRAM SHALL BE PROVIDED AS INDICATED ON THE HVAC ARRANGEMENT DRAWINGS AND SPECIFICATIONS.
5. THIS FLOW DIAGRAM IS COMMON FOR UNITS 1 AND 2.
6. FOR LOGIC OF CHANNEL NUMBER X-RE-5570A, X-RE-5570B, X-RE-5567A AND X-RE-5567B SEE ICD M1-2301-10.
7. IN LINE AIR FLOW ELEMENTS ARE PROVIDED TO MEASURE AIR FLOW THRU DUCTS. MANUAL ADJUSTMENT OF THE INLET VANES ON EXHAUST FANS IS METHOD OF CONTROLLING FLOW. INSTRUMENT CONNECTIONS ARE PROVIDED WITH FLOW ELEMENTS. FLOW ELEMENTS 1-FE-6175B AND 1-FE-6175F ARE SHOWN ON DRAWING M1-0301 FLOW ELEMENTS 2-FE-6175B AND 2-FE-6175F ARE SHOWN ON DRAWING M2-0301. FLOW ELEMENT X-FE-6175C IS SHOWN ON DRAWING M1-0301-01.
8. DELETED
9. THREE ISOKINETIC NOZZLES ARE PROVIDED AT REFERENCE ELEVATION.
10. FOR INSTRUMENT PURGE LOW PRESSURE (<5 PSIG) CLEAN DRY PURGE GAS FLOW RATE 2.0 SCFM AND 0.06 SCFM FOR EACH MONITOR.
11. MIN SLOPE 1/4 " : 12" TOWARD ALL MONITORS.
12. AIR FLOW THRU VENT STACK IS BASED ON THE MAXIMUM CAPACITY OF THE OPERATING UNITS.
13. FOR DRAIN FLOW ORIFICE NUMBERS AND LINE CONTINUATION SEE DRAWING M1-0225-02 AND 02A, LOC: C, D, E AND F-2.
14. NOT WITHIN ASME CODE BOUNDARY.
15. MANUAL OPERATION (DISCONNECTED OPERATOR).
16. AIR FLOW QUANTITIES SHOWN ARE BASED ON A DENSITY OF 0.075 LB/FT OCCURRING AT THE STANDARD CONDITION OF DRY AIR AT 70°F AND 29.92" HG BAROMETRIC PRESSURE. QUANTITIES IN PARENTHESES ARE ACTUAL AIR FLOW RATES BASED ON DENSITY AT DESIGN CONDITIONS.
17. FILTRATION UNITS CPX-VAFUPK-01,02,15,16 ARE ESF. FILTRATION UNITS CPX-VAFUPK-03,04,05,06,07,08,09 AND CPX-VAFUPK-10,11,12,13,14 ARE NON ESF.
18. ✻ SHOWS COMPONENT IS BY VENDOR
19. FILTRATION UNIT MAXIMUM AIR FLOW CAPACITY OF 15,000 CFM IS NOT TO BE EXCEEDED AT ALL MODES AND CONDITIONS.
20. THE AIR FLOW RATES SHOWN ARE ORIGINAL VALUES FOR INITIAL FLOW BALANCING AND DO NOT REPRESENT AS-BUILT. AIR FLOW IS BALANCED TO MAINTAIN ROOM TEMPERATURES WITHIN DESIGN DURING NORMAL OPERATION AND TO ENSURE THE DIRECTION OF AIR FLOW IS AS SHOWN.

REFERENCES:

1.	M1-0313	FLOW DIAGRAM - VENTILATION AAP BLDG AND CONTROL BLDG UPS AREA A/C SYSTEMS
2.	M1-0200	MECHANICAL DRAWING NOTES AND SYMBOLS
3.	M1-0301	FLOW DIAGRAM - VENTILATION CONTAINMENT
4.	M1-0302-C	FLOW DIAGRAM - VENTILATION SAFEGUARDS AND ELECTRICAL AREA
5.	M1-0236-01A M1-0236-02	FLOW DIAGRAM - VENTS AND DRAINS SYSTEM
6.	M1-0225-02	FLOW DIAGRAM - AUXILIARY BUILDING FIRE PROTECTION
7.	M1-0225-02A	FLOW DIAGRAM - AUXILIARY BUILDING FIRE PROTECTION
8.	M1-0309	FLOW DIAGRAM - VENTILATION PRIMARY PLANT SUPPLY AND EXHAUST
9.	M1-0309-B	FLOW DIAGRAM - VENTILATION PRIMARY PLANT SUPPLY AND EXHAUST
10.	FLO-353-1700	GENERAL ATOMIC - OUTLINE AND FLOW DIAGRAM
11.	0366-1600 0366-2000	GENERAL ATOMIC SAMPLE CONDITIONING SKID SAMPLE DETECTION SKID
12.	0353-5100	GENERAL ATOMIC - ISOKINETIC NOZZLE PROBE INSTALLATION (WRGM)

FSAR FIGURE 9.4-9

THIS DRAWING CREATED ELECTRONICALLY

DRAWING M1-0309 REV CP-9
HAS BEEN SPLIT INTO THE FOLLOWING SHEETS:
M1-0309
M1-0309-A
M1-0309-B

PRIMARY PLANT VENTILATION SUMMARY

	PPVSS		PPVES		
	CFM DESIGN FLOW *	NO UNITS	CFM DESIGN FLOW * SCFM	ACFM	NO UNITS
AUXILIARY BLDG	81,600		94,000	99,380	
FUEL HANDLING BLDG	33,500		34,500	36,700	
SAFEGUARD BLDG - U1	20,200		21,000	22,340	
SAFEGUARD BLDG - U2	20,700		21,580	22,930	
NORMAL MODE U1 AND U2	156,000	6	171,080	181,350	13
CONT BLDG PURGE U1 OR U2	26,000		26,000	27,900	
PURGE MODE U1 OR U2	161,300	7	197,080	209,250	15

* ACCEPTANCE CRITERIA FOR TESTING AND BALANCING SHOULD BE BASED ON TOTAL DESIGN AIR FLOWS, AND PROVIDING SLIGHTLY NEGATIVE PRESSURE WITHIN THE PRESSURE BOUNDARY.

VALVE AND INSTRUMENT TABLE

FILTRATION UNIT NUMBER (SEE NOTE 17)	DELUGE DRAIN VALVES		DELUGE SUPPLY		PRESSURE SWITCHES AND PRESSURE INDICATORS A, B, C, D AND E	PRESSURE INDICATING SWITCH
	(A)	(B)	(C)	DRAWING REF. AND ZONE LOCATION		
CPX-VAFUPK-07	CPX-VADPCK-13	CPX-VADPCK-14	XFP-0650	M1-0225-02A LOC: A-1	6132	6131
CPX-VAFUPK-08	CPX-VADPCK-15	CPX-VADPCK-16	XFP-0641	M1-0225-02A LOC: A-2	6137	6136
CPX-VAFUPK-09	CPX-VADPCK-17	CPX-VADPCK-18	XFP-0649	M1-0225-02 LOC: F-1	6142	6141
CPX-VAFUPK-10	CPX-VADPCK-19	CPX-VADPCK-20	XFP-0640	M1-0225-02 LOC: F-2	6147	6146
CPX-VAFUPK-11	CPX-VADPCK-21	CPX-VADPCK-22	XFP-0647	M1-0225-02 LOC: E-1	6152	6151
CPX-VAFUPK-12	CPX-VADPCK-23	CPX-VADPCK-24	XFP-0638	M1-0225-02 LOC: D-2	6157	6156
CPX-VAFUPK-13	CPX-VADPCK-25	CPX-VADPCK-26	XFP-0646	M1-0225-02 LOC: D-1	6162	6161
CPX-VAFUPK-14	CPX-VADPCK-27	CPX-VADPCK-28	XFP-0637	M1-0225-02 LOC: D-2	6167	6166
CPX-VAFUPK-15	CPX-VADPCK-29	CPX-VADPCK-30	XFP-0645	M1-0225-02 LOC: C-1	SEE DIAGRAM	SEE DIAGRAM
CPX-VAFUPK-16	CPX-VADPCK-31	CPX-VADPCK-32	XFP-0636	M1-0225-02 LOC: C-2	SEE DIAGRAM	SEE DIAGRAM

R

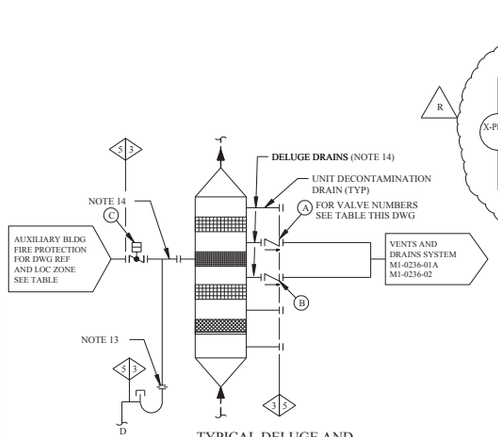

TYPICAL DELUGE AND DRAIN CONNECTIONS FOR NON ESF FILTRATION UNITS

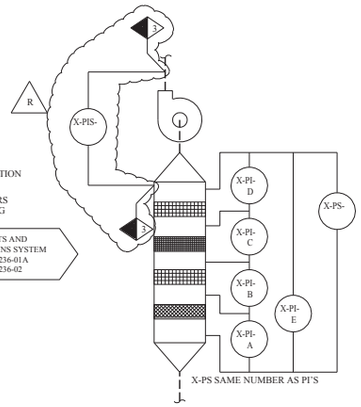

DETAIL A
TYPICAL FOR CPX-VAFUPK-07,08, 09,10,11,12,13,14
SEE TABLE

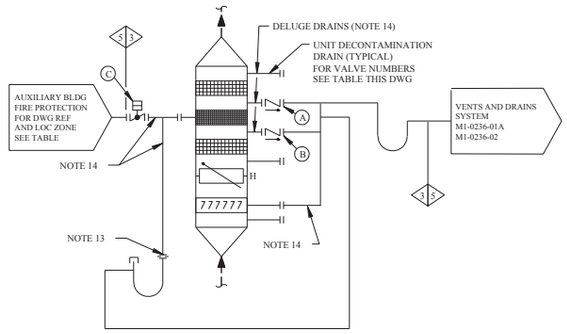

TYPICAL DELUGE AND DRAIN CONNECTIONS FOR ESF FILTRATION UNITS CPX-VAFUPK-15 AND CPX-VAFUPK-16

CLASS I
(NUCLEAR SAFETY-RELATED)
SAFETY CLASS 1 SEISMIC CATEGORY I
SAFETY CLASS 2 CLASS 1E
SAFETY CLASS 3 ASSOCIATED CIRCUITS

LUMINANT
CPSES
GLEN ROSE, TEXAS

FLOW DIAGRAM
VENTILATION PRIMARY PLANT
SUPPLY AND EXHAUST

DWG. NO.	SH. NO.	REV.
M1-0309	A	CP-20

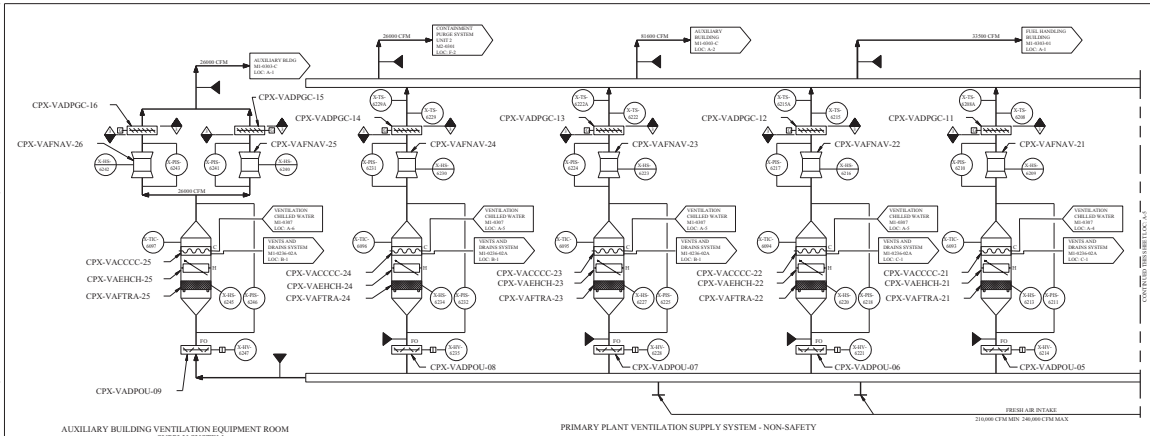

AUXILIARY BUILDING VENTILATION EQUIPMENT ROOM SUPPLY SYSTEM
NON-SAFETY
2 FANS - (1 STANDBY)
26000 CFM EACH

PRIMARY PLANT VENTILATION SUPPLY SYSTEM - NON-SAFETY

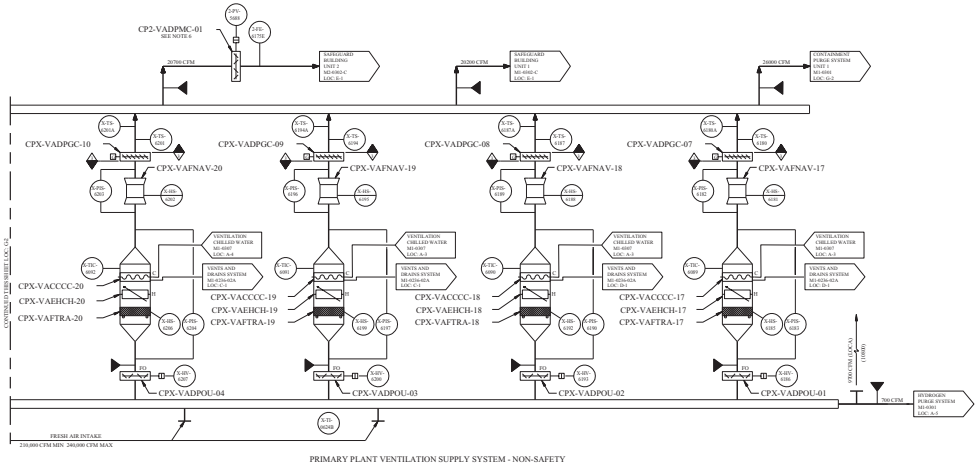

PRIMARY PLANT VENTILATION SUPPLY SYSTEM - NON-SAFETY
EIGHT UNITS 26000 CFM EACH
6 UNITS - NORMAL OPERATION
7 UNITS - NORMAL OPERATION & CONTAINMENT PURGE
1 UNIT - STANDBY

REV.	DRN	CHKD	APP'D	REMARKS
09-11	Nick Kaiser	Mike Kaiser		THIS DRAWING REVISED TO INCORPORATE DESIGN CHANGE TMA 3001-2010-003-01-00 PER ISO-0303-01-00/001-01-00.

NOTES:

1. FOR HVAC ABBREVIATIONS AND SYMBOLS SEE DRAWINGS M1-0313 AND M1-0200.
2. THIS DIAGRAM IS A SCHEMATIC REPRESENTATION AND IS INTENDED TO SHOW GENERAL AIR DISTRIBUTION AND FLOW PATHS.
3. BALANCING DAMPERS, REGISTERS, DIFFUSERS, FLEXIBLE CONNECTIONS AND ALL OTHER RELATED ACCESSORIES NOT SHOWN ON THIS DIAGRAM SHALL BE PROVIDED AS INDICATED ON THE HVAC ARRANGEMENT DRAWINGS AND SPECIFICATIONS.
4. THIS FLOW DIAGRAM IS COMMON FOR UNITS 1 AND 2.
5. AIR FLOW QUANTITIES SHOWN ARE BASED ON A DENSITY OF 0.075 LB/FT OCCURRING AT THE STANDARD CONDITION OF DRY AIR AT 70°F AND 29.92" HG BAROMETRIC PRESSURE. QUANTITIES IN PARENTHESES ARE ACTUAL AIR FLOW RATES BASED ON DENSITY AT DESIGN CONDITIONS.
6. DAMPER ABANDONED IN-PLACE (IN OPEN POSITION), ALL AIR CONNECTIONS AND ELECTRICAL CONNECTIONS ARE DISCONNECTED.
7. AIR FLOW RATES SHOWN ARE ORIGINAL DESIGN VALUES FOR INITIAL FLOW BALANCING AND DO NOT REPRESENT AS-BUILT. AIR FLOW IS BALANCED TO MAINTAIN ROOM TEMPERATURES WITHIN THE REQUIRED RANGE OF OPERATION AND TO ENSURE THE DIRECTION OF AIR FLOW IS AS SHOWN.

REFERENCES:

1.	M1-0313	FLOW DIAGRAM - VENTILATION AAP BLDG AND CONTROL BLDG UPS AREA A/C SYSTEMS
2.	M1-0200	MECHANICAL DRAWING NOTES AND SYMBOLS
3.	M1-0301	FLOW DIAGRAM-VENTILATION CONTAINMENT
4.	M1-0303-C	FLOW DIAGRAM-VENTILATION AUXILIARY BUILDING
5.	M1-0303-01	FLOW DIAGRAM-VENTILATION FUEL HANDLING BUILDING
6.	M2-0302	FLOW DIAGRAM-VENTILATION SAFEGUARD AND ELECTRICAL AREA
7.	M2-0301	FLOW DIAGRAM-VENTILATION CONTAINMENT
8.	M1-0307	FLOW DIAGRAM - VENTILATION CHILLED WATER SYSTEM
9.	M1-0309	FLOW DIAGRAM - VENTILATION PRIMARY PLANT SUPPLY AND EXHAUST
10.	M1-0309-A	FLOW DIAGRAM - VENTILATION PRIMARY PLANT SUPPLY AND EXHAUST
11.	M1-0236-02A	FLOW DIAGRAM - VENTS AND DRAIN SYSTEM - AUXILIARY BUILDING

FSAR FIGURE 9.4-9

THIS DRAWING IS CONTAINED ON ONE SHEET

DRAWING M1-0309 REV CP-9 HAS BEEN SPLIT INTO THE FOLLOWING SHEETS:
M1-0309
M1-0309-A
M1-0309-B

CLASS I
(NUCLEAR SAFETY-RELATED)
SAFETY CLASS 1 — SEISMIC CATEGORY I
SAFETY CLASS 2 — CLASS 1E
SAFETY CLASS 3 — QUALIFIED CIRCUITS

TXU POWER
CPSES
GLEN ROSE, TEXAS

FLOW DIAGRAM
VENTILATION AND PRIMARY PLANT
SUPPLY AND EXHAUST

DWG. NO.	SH. NO.	REV.
M1-0309	B	CP-11

REF CORLD 5301201

SEISMIC AREAS

nuc515200.dgn

M1-0309-B

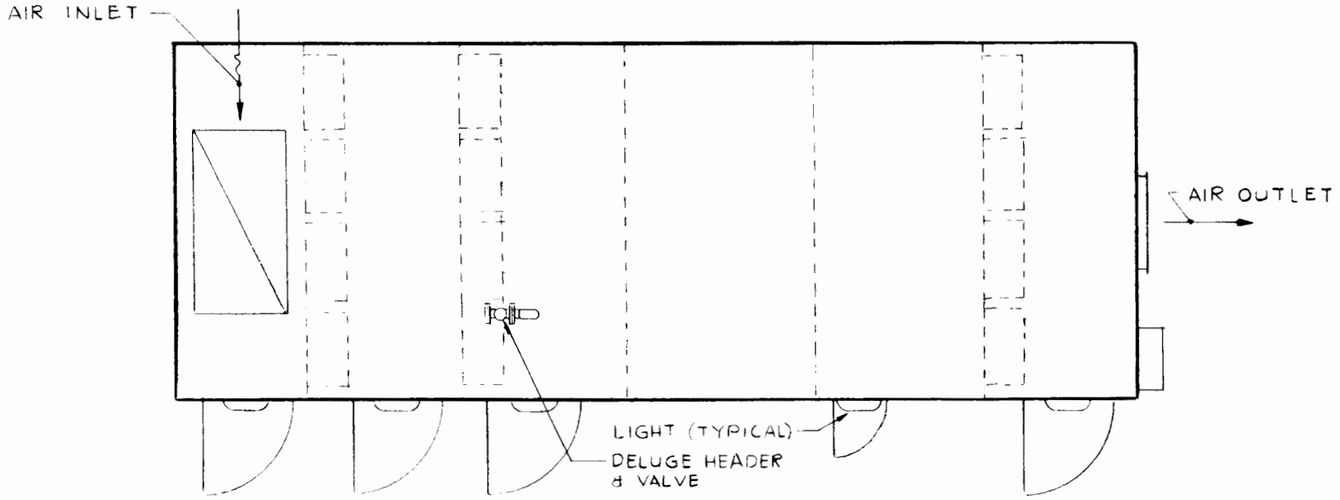

PLAN

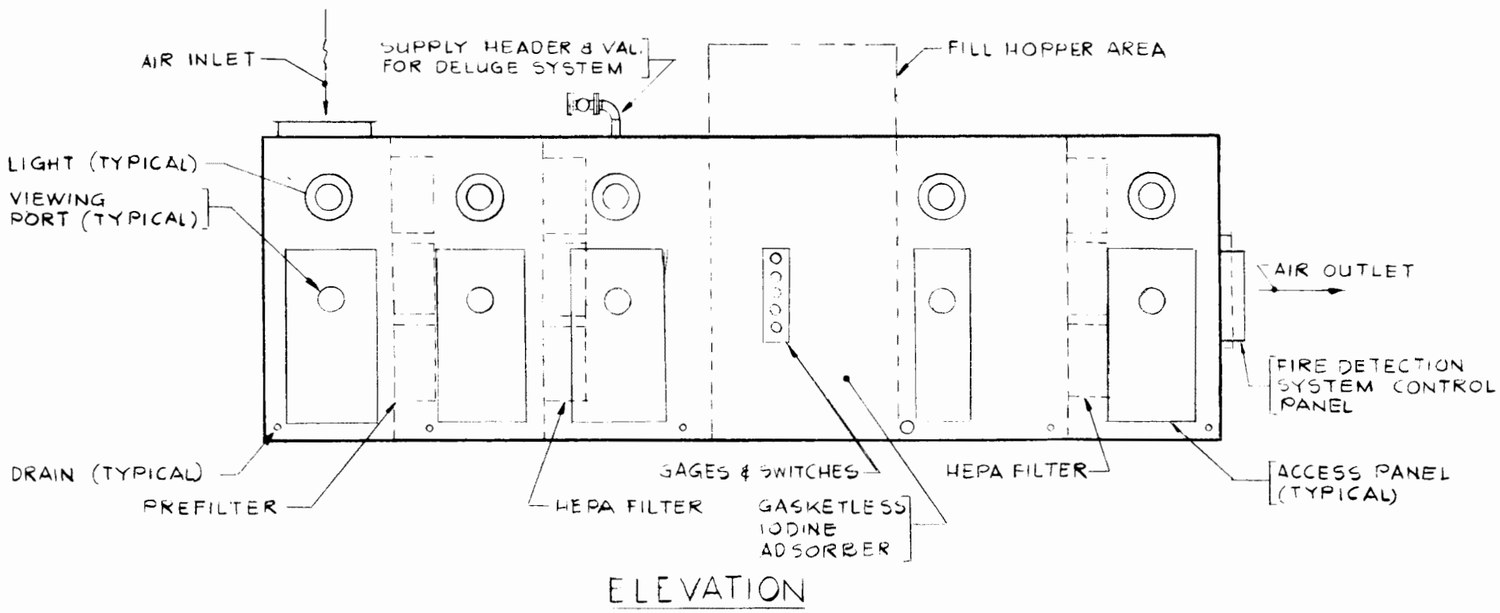

ELEVATION

COMANCHE PEAK S.E.S.
FINAL SAFETY ANALYSIS REPORT
UNITS 1 and 2

NON-ESF
CHARCOAL FILTER TRAIN

FIGURE 9.4.10

REV	DWN	CHKD	APVD	REMARKS
CP-46	MM 08-08 2015	GAW 08-08 2015		THIS DRAWING REVISED TO INCORPORATE DESIGN CHANGE FDA-2015-000087-01-00 PER SK-0001-15-000087-01-00.

NOTES:

1. SEE DRAWING M1-0200 AND M1-0313 FOR I/C AND MECHANICAL SYMBOLS.
2. FOR UNIT 2 PIPE SIZES AND EQUIPMENT IDENTIFICATION SEE DWG M2-0307.
3. SEE TRANE COMPANY DRAWINGS E6000.2450 AND B6000.3134 FOR DETAILS ON ELECTRICAL CONNECTIONS AND LOGIC FS CONNECTIONS.
4. ALL VENTS, DRAINS AND INSTRUMENTATION PIPES HAVE LINE DESIGNATION □-152-5 IN ALL BUILDINGS EXCEPT TURBINE BLDG, WHICH ARE □-152G, UNLESS OTHERWISE NOTED.
5. TEMPORARY STRAINERS CPX-CHSRPS-01,02,03,04 AND TEMPORARY STRAINERS FOR PUMPS CPX-CHAPCP-12,13,14 ARE PLACED IN THE SPOOL PIECES DURING INITIAL FLUSHING OPERATIONS. STRAINERS MUST BE REMOVED AT PLANT START-UP.
6. UNLESS OTHERWISE NOTED, DRAINS COLLECTED BY CCW DRAIN SYSTEM.
7. DELETED
8. PROVIDE VENTS AT HIGH POINTS AND DRAINS AT LOW POINTS ON PIPING SYSTEM.
9. COOLING COIL DETAILS FOR UNITS CPX-VACCCC-17,18,19,20,21,22,23,24,25 ARE SHOWN ON DWG M1-0307-C.
10. VALVE HAS BEEN "TEAM LEAKED" BUT IS NO LONGER TRACKED UNDER THE TEMP MOD PROCESS. ANY FURTHER REWORK SHOULD BE ADDRESSED BY THE NORMAL WORK PROCESS.
11. CONNECTIONS ARE FOR COMPENSATORY ACTIONS IF THE INSTALLED UNITS ARE UNABLE TO PROVIDE ADEQUATE COOLING.

R

REFERENCES:

M1-0307-A	FLOW DIAGRAM VENTILATION CHILLED WATER SYSTEM
M1-0307-B	FLOW DIAGRAM VENTILATION CHILLED WATER SYSTEM
M1-0307-C	FLOW DIAGRAM VENTILATION CHILLED WATER SYSTEM
M2-0307	FLOW DIAGRAM VENTILATION CHILLED WATER SYSTEM
M1-0230-B	COMPONENT COOLING WATER SYSTEM
M1-0236-01A	VENTS AND DRAINS SYSTEM
M1-0222-A	SECONDARY SAMPLING SYSTEM
M1-0242-A	DEMINERALIZED AND REACTOR MAKE-UP WATER
M1-0210-B	CIRCULATING WATER SYSTEM

FSAR FIGURE 9.4-11

THIS DRAWING CREATED ELECTRONICALLY

DRAWING M1-0307 REV CP-11
HAS BEEN SPLIT INTO THE FOLLOWING SHEETS:
M1-0307
M1-0307-B
M1-0307-C

DRAWING 2323-M1-0307 REV CP-8
HAS BEEN SPLIT INTO THE FOLLOWING SHEETS:
M1-0307
M1-0307-A

CLASS III

LUMINANT
CPNPP
GLEN ROSE, TEXAS

FLOW DIAGRAM VENTILATION CHILLED WATER SYSTEM

DWG. NO. M1-0307 | SH. NO. - | REV. CP-46

FINAL PRINT

REF CKD CP-28 12/19/96

me991300.dgn A M1-0307

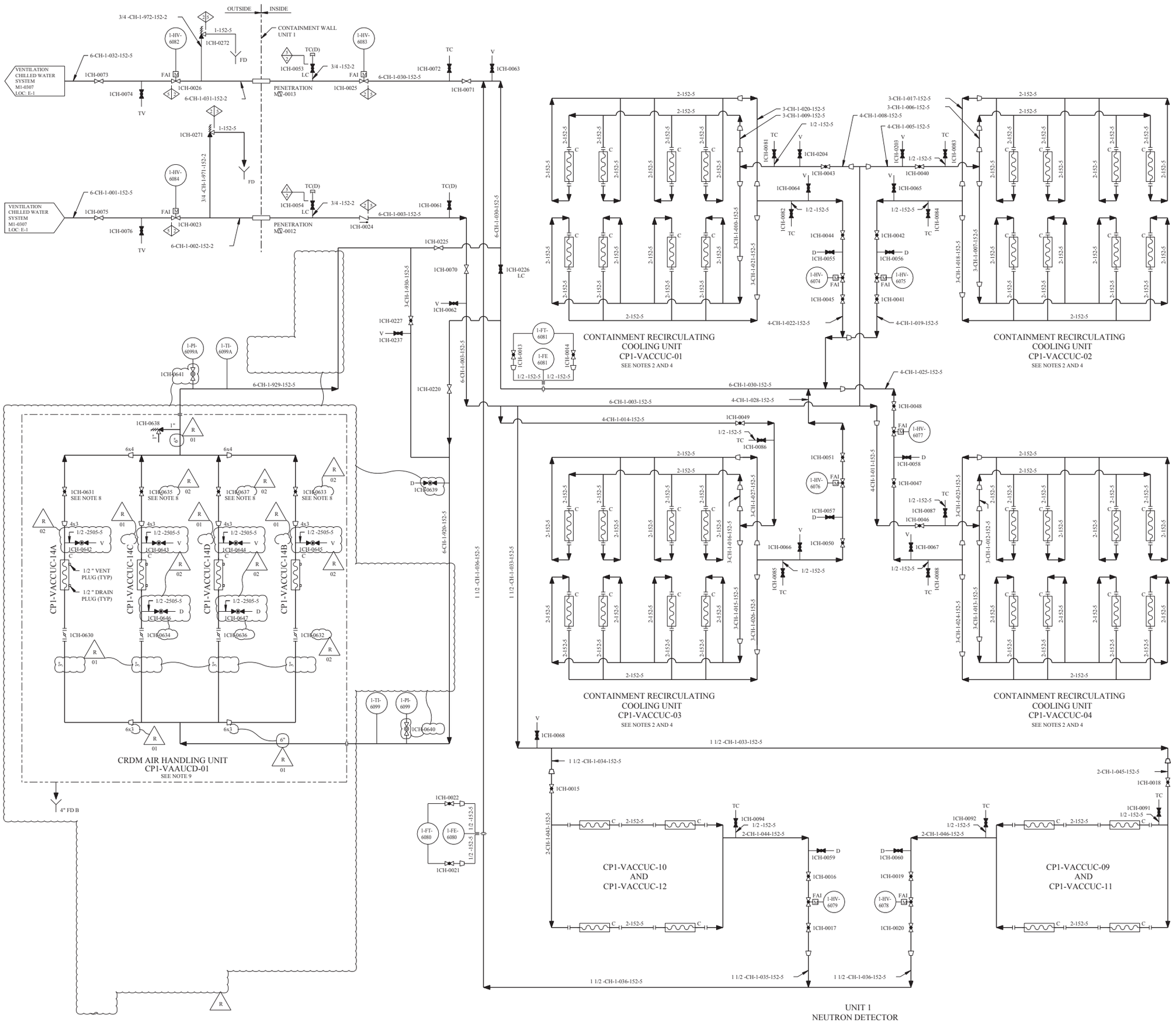

REV	DWN	CHKD	APVD	REMARKS
CP-8	GLC 03-19 2007	GAW 03-19 2007		THIS DRAWING REVISED TO INCORPORATE DESIGN CHANGE FDA 2004-002710-03-03 PER SK-0037-04-002710-03-02.

NOTES:

1. SEE DRAWINGS M1-0200 AND M1-0313 FOR I&C AND MECHANICAL SYMBOLS.
2. ONE OF THE FOUR CONTAINMENT RECIRCULATING COOLING UNITS IS STANDBY.
3. DELETED
4. FOR CONDENSATE FROM COOLING COILS CP1-VACCUC-01 , CP1-VACCUC-02 ,CP1-VACCUC-03 AND CP1-VACCUC-04 SEE DRAWING M1-0238-A LOCATION E-6.
5. ALL VENTS, DRAINS AND INSTRUMENTATION PIPES HAVE LINE DESIGNATION 3/4 -152-5 IN ALL BUILDINGS EXCEPT TURBINE BUILDING, WHICH ARE 3/4 -152G, UNLESS OTHERWISE NOTED.
6. UNLESS OTHERWISE NOTED, DRAINS COLLECTED BY CCW DRAIN SYSTEM.
7. PROVIDE VENTS AT HIGH POINTS AND DRAINS AT LOW POINTS ON PIPING SYSTEM.
8. CIRCUIT SETTER CALIBRATED BALANCE VALVE.
9. SEE GENERAL ARRANGEMENT DRAWING N1559-GA SERIES FOR THE AIR HANDLING UNIT (AHU) FOR THE CRDM VENTILATION SYSTEM. SEE N1559-CP FOR THE CONTAINMENT COOLER PIPING LAYOUT.

R

REFERENCES:

M1-0307	FLOW DIAGRAM VENTILATION CHILLED WATER SYSTEM
M1-0200	MECHANICAL SYMBOLS AND NOTES
M1-0313	FLOW DIAGRAM VENTILATION AAP BUILDING AND CONTROL BUILDING UPS AREA A/C SYSTEMS

FSAR FIGURE 9.4-11

THIS DRAWING CREATED ELECTRONICALLY

DRAWING 2323-M1-0307 REV CP-8
HAS BEEN SPLIT INTO THE FOLLOWING SHEETS:
M1-0307
M1-0307-A

CLASS I
(NUCLEAR SAFETY-RELATED)
SAFETY CLASS 1 SEISMIC CATEGORY I
SAFETY CLASS 2 CLASS 1E
SAFETY CLASS 3 ASSOCIATED CIRCUITS

LUMINANT
CPSES
GLEN ROSE, TEXAS

FLOW DIAGRAM
VENTILATION
CHILLED WATER SYSTEM

DWG. NO. M1-0307 | SH. NO. A | REV. CP-8

FINAL PRINT

REF CKD CP-6 8/12/97

me757700.dgn A M1-0307-A

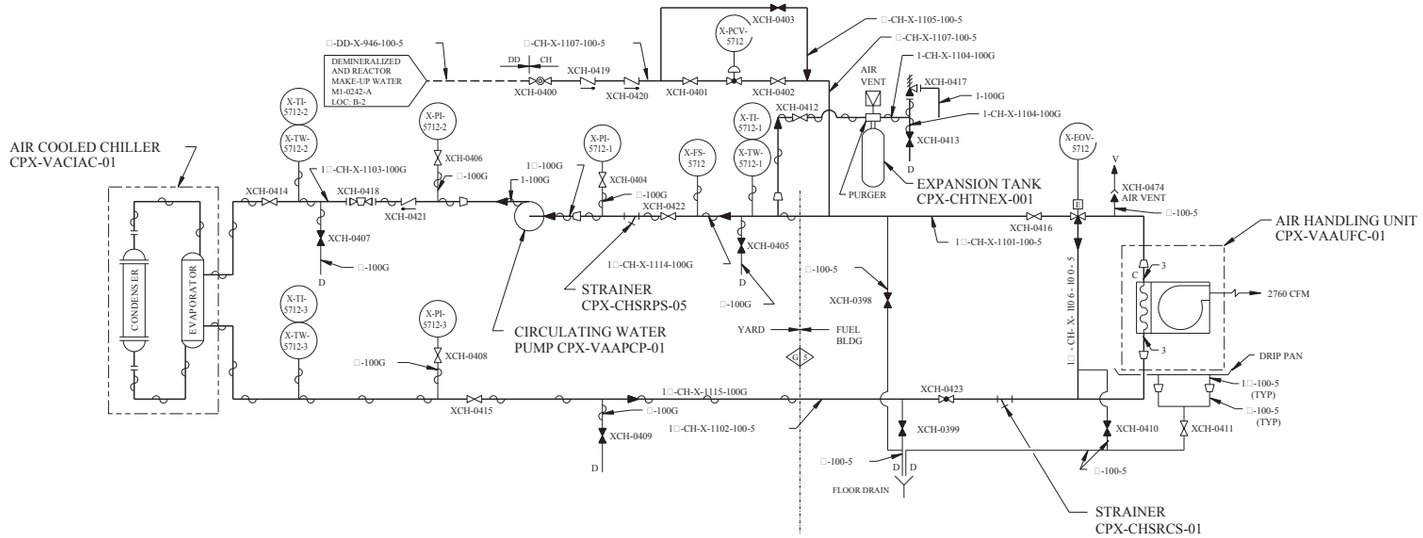

SUPPLEMENTARY AIR CONDITIONING SYSTEM
FOR THE FUEL HANDLING BLDG

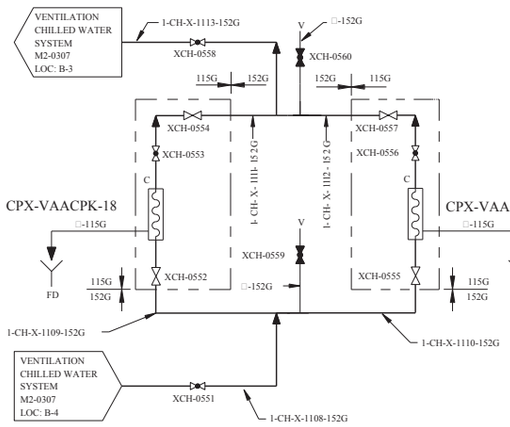

SUPPLEMENTARY VENTILATION CHILLED WATER SYSTEM
TURBINE BLDG OFFICE AREA, ROOM 39: ALTERNATE RCA ACCESS

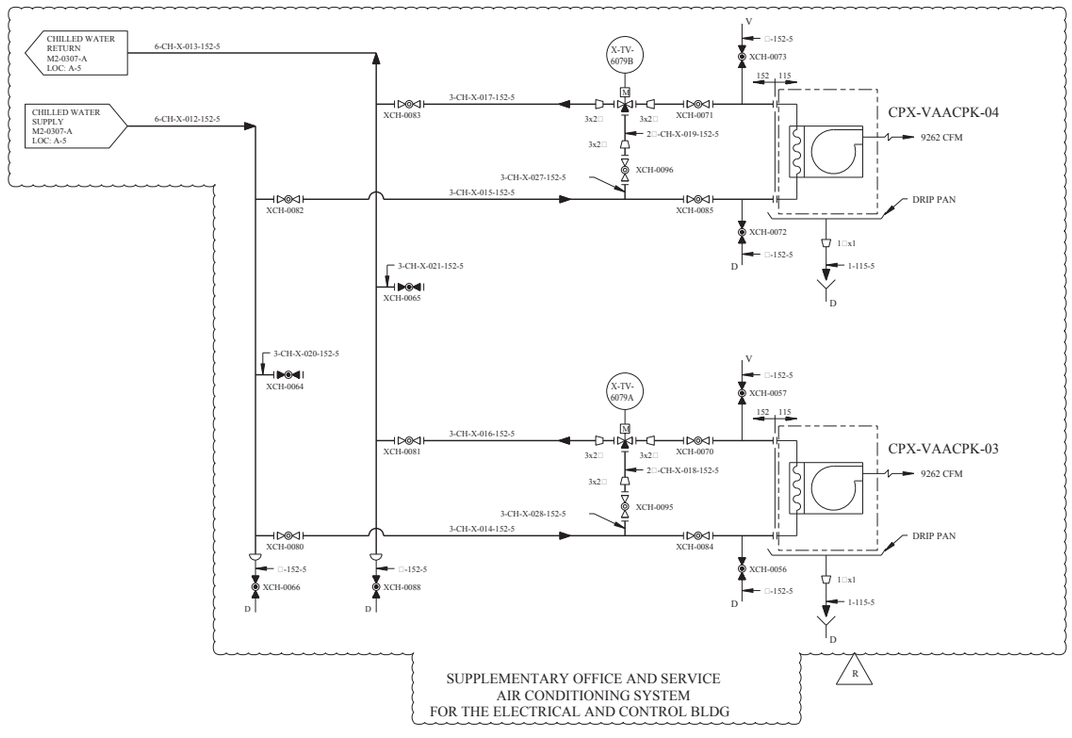

SUPPLEMENTARY OFFICE AND SERVICE
AIR CONDITIONING SYSTEM
FOR THE ELECTRICAL AND CONTROL BLDG

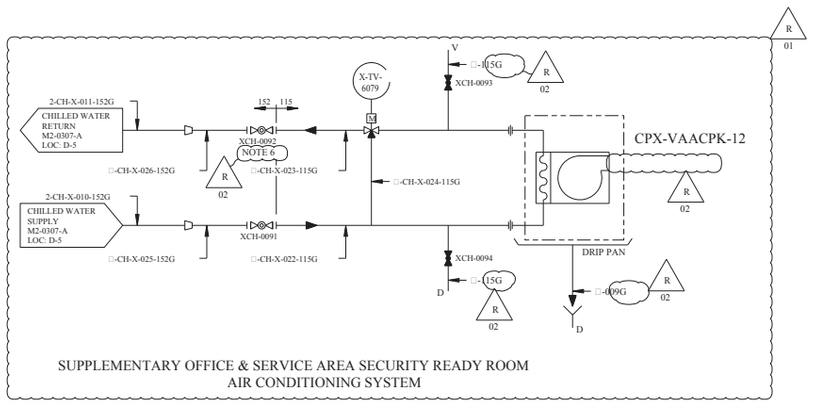

SUPPLEMENTARY OFFICE & SERVICE AREA SECURITY READY ROOM
AIR CONDITIONING SYSTEM

REV	DWN	CHKD	APVD	REMARKS
CP-8	DJK 07-30-2012	MM 07-30-2012		THIS DRAWING REVISED TO INCORPORATE DESIGN CHANGE FDA 2009-001966-02-07 PER SK-00060-09-001966-02-02.

NOTES:

1. SEE DRAWINGS M1-0200 AND M1-0313 FOR I/C AND MECHANICAL SYMBOLS.
2. ALL VENTS, DRAINS AND INSTRUMENTATION PIPES HAVE LINE DESIGNATION □-152-5 IN ALL BUILDINGS EXCEPT TURBINE BUILDING, WHICH ARE □-152G, UNLESS OTHERWISE NOTED.
3. UNLESS OTHERWISE NOTED, DRAINS COLLECTED BY CCW DRAIN SYSTEM.
4. PROVIDE VENTS AT HIGH POINTS AND DRAINS AT LOW POINTS ON PIPING SYSTEM.
5. VENDOR SUPPLIED COMPONENTS (WHERE APPLICABLE) SHALL BE HEAT TRACED AND INSULATED FOR FREEZE PROTECTION.
6. THROTTLE VALVE (XCH-0092) DOWNSTREAM OF FAN COIL UNIT TO BE LOCKED IN POSITION (LIP) AFTER BALANCING OF CHILLED WATER THROUGH CPX-VAACPK-12 COIL.

R 02

REFERENCE DRAWINGS:

M1-0242-A	FLOW DIAGRAM DEMINERALIZED AND REACTOR MAKE-UP WATER SHEET 4 OF 5
M1-0200	MECHANICAL SYMBOLS AND NOTES
M1-0313	FLOW DIAGRAM VENTILATION AAP BLDG AND CONTROL BLDG UPS AREA A/C SYSTEMS

R 01

FSAR FIGURE 9.4-11

THIS DRAWING CREATED ELECTRONICALLY

DRAWING M1-0307 REV CP-11
HAS BEEN SPLIT INTO THE FOLLOWING SHEETS:
M1-0307
M1-0307-B
M1-0307-C

CLASS II

LUMINANT
CPNPP
GLEN ROSE, TEXAS

FLOW DIAGRAM - VENTILATION
CHILLED WATER SYSTEM

DWG NO. M1-0307 | SH. NO. B | REV. CP-8

$$$$$$$DATE$$$$$$$

me102260.dgn A M1-0307-B B C D E F G < FINAL PRINT > H

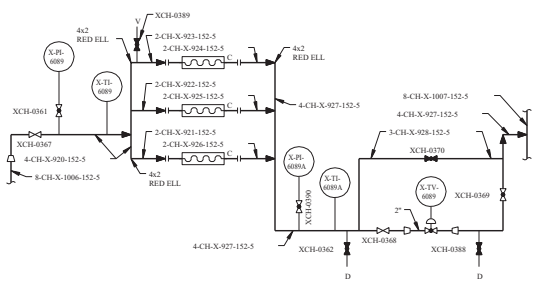

COOLING COILS CPX-VACCCC-17
REF DWG M1-0307 LOCATION (A-2)

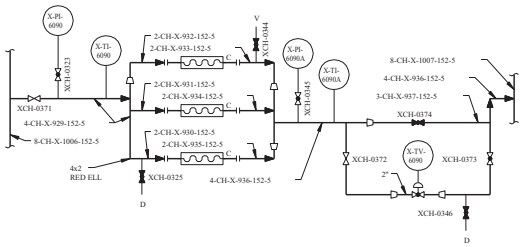

COOLING COILS CPX-VACCCC-18
REF DWG M1-0307 LOCATION (A-3)

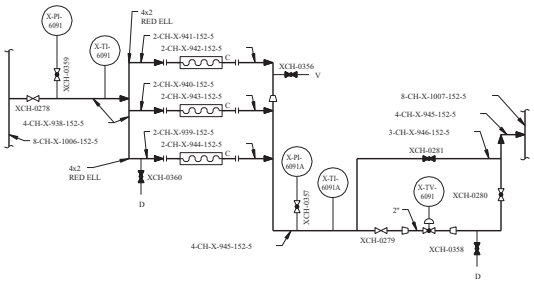

COOLING COILS CPX-VACCCC-19
REF DWG M1-0307 LOCATION (A-3)

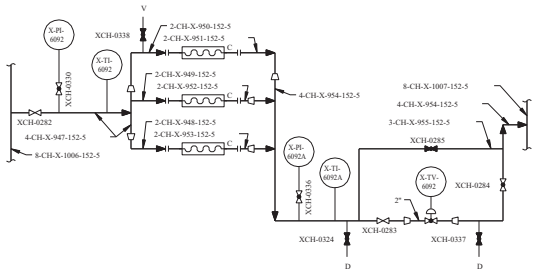

COOLING COILS CPX-VACCCC-20
REF DWG M1-0307 LOCATION (A-3)

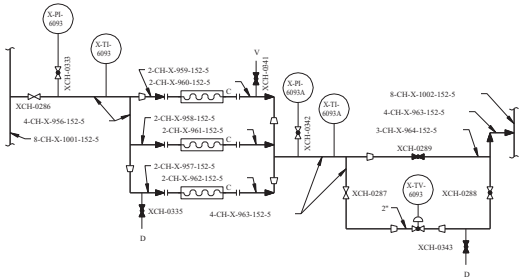

COOLING COILS CPX-VACCCC-21
REF DWG M1-0307 LOCATION (A-4)

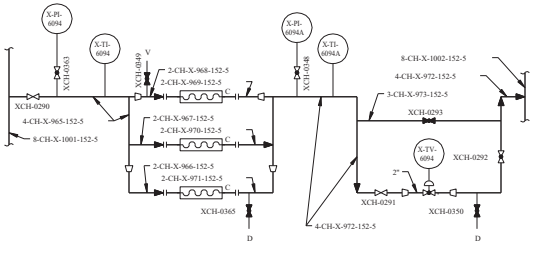

COOLING COILS CPX-VACCCC-22
REF DWG M1-0307 LOCATION (A-4)

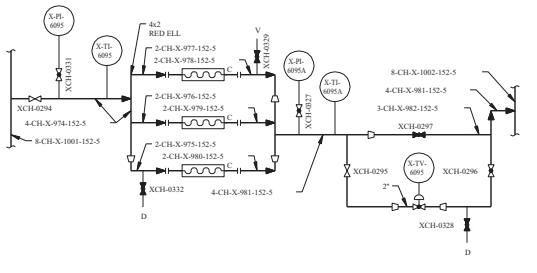

COOLING COILS CPX-VACCCC-23
REF DWG M1-0307 LOCATION (A-5)

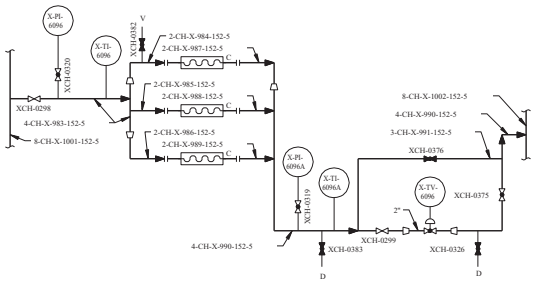

COOLING COILS CPX-VACCCC-24
REF DWG M1-0307 LOCATION (A-5)

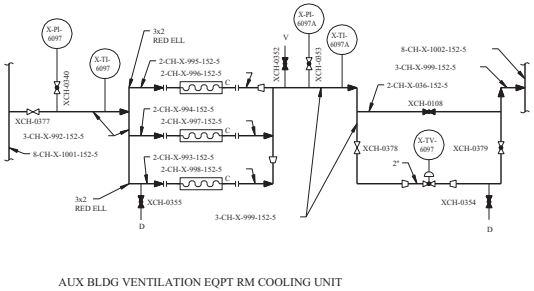

AUX BLDG VENTILATION EQPT RM COOLING UNIT
COOLING COILS CPX-VACCCC-25
REF DWG M1-0307 LOCATION (A-6)

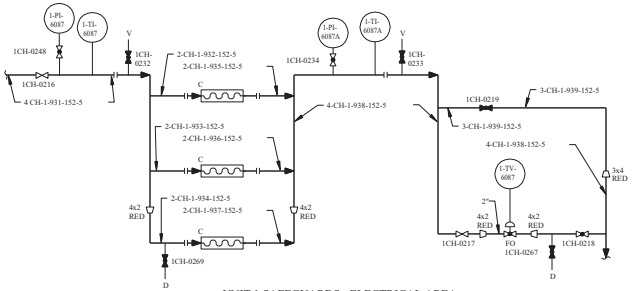

UNIT 1 SAFEGUARDS - ELECTRICAL AREA
COOLING COILS CP1-VACCCC-01
REF DWG M1-0307 LOCATION (B-4)

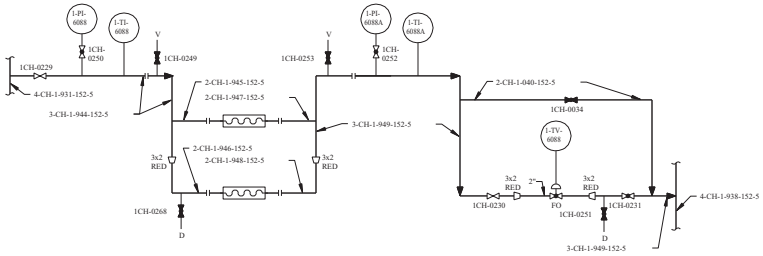

UNIT 1 SAFEGUARDS - MS/FW PENET AREA
COOLING COILS CP1-VACCCC-02
REF DWG M1-0307 LOCATION (B-4.5)

REV	DWN	CHK	APVD	REMARKS
CP-4	RMS 06-07-1996			THIS DRAWING REVISED TO ADD THE FSAR FIGURE NUMBER AS AN EDITORIAL CHANGE.

NOTES:
1. SEE DRAWINGS M1-0200 AND M1-0313 FOR I/C AND MECHANICAL SYMBOLS.
2. ALL VENTS, DRAINS AND INSTRUMENTATION PIPES HAVE LINE DESIGNATION 3/4 -152-5 IN ALL BUILDINGS EXCEPT TURBINE BUILDING, WHICH ARE 3/4 -152G, UNLESS OTHERWISE NOTED.
3. UNLESS OTHERWISE NOTED, DRAINS COLLECTED BY CCW DRAIN SYSTEM.
4. PROVIDE VENTS AT HIGH POINTS AND DRAINS AT LOW POINTS ON PIPING SYSTEM.

REFERENCES:

M1-0307	FLOW DIAGRAM VENTILATION CHILLED WATER SYSTEM
M1-0200	MECHANICAL SYMBOLS AND NOTES
M1-0313	FLOW DIAGRAM-VENTILATION AAP BUILDING AND CONTROL BUILDING UPS AREA A/C SYSTEMS

FSAR FIGURE 9.4-11

CP-4

THIS DRAWING CREATED ELECTRONICALLY

DRAWING M1-0307 REV CP-11 HAS BEEN SPLIT INTO THE FOLLOWING SHEETS:
M1-0307
M1-0307-B
M1-0307-C

NON-NUCLEAR SAFETY
QA PROGRAM APPLICABLE
CLASS 5 SEISMIC CATEGORY II
FIRE PROTECTION SYSTEM
RADIOACTIVE WASTE MANAGEMENT SYSTEM

TXU ELECTRIC
CPSES
GLEN ROSE, TEXAS

FLOW DIAGRAM - VENTILATION
CHILLED WATER SYSTEM

DWG. NO.	SH. NO.	REV.
M1-0307	C	CP-4

vs0000ho.dgn

SSSSSSSTA\TESSSSSS

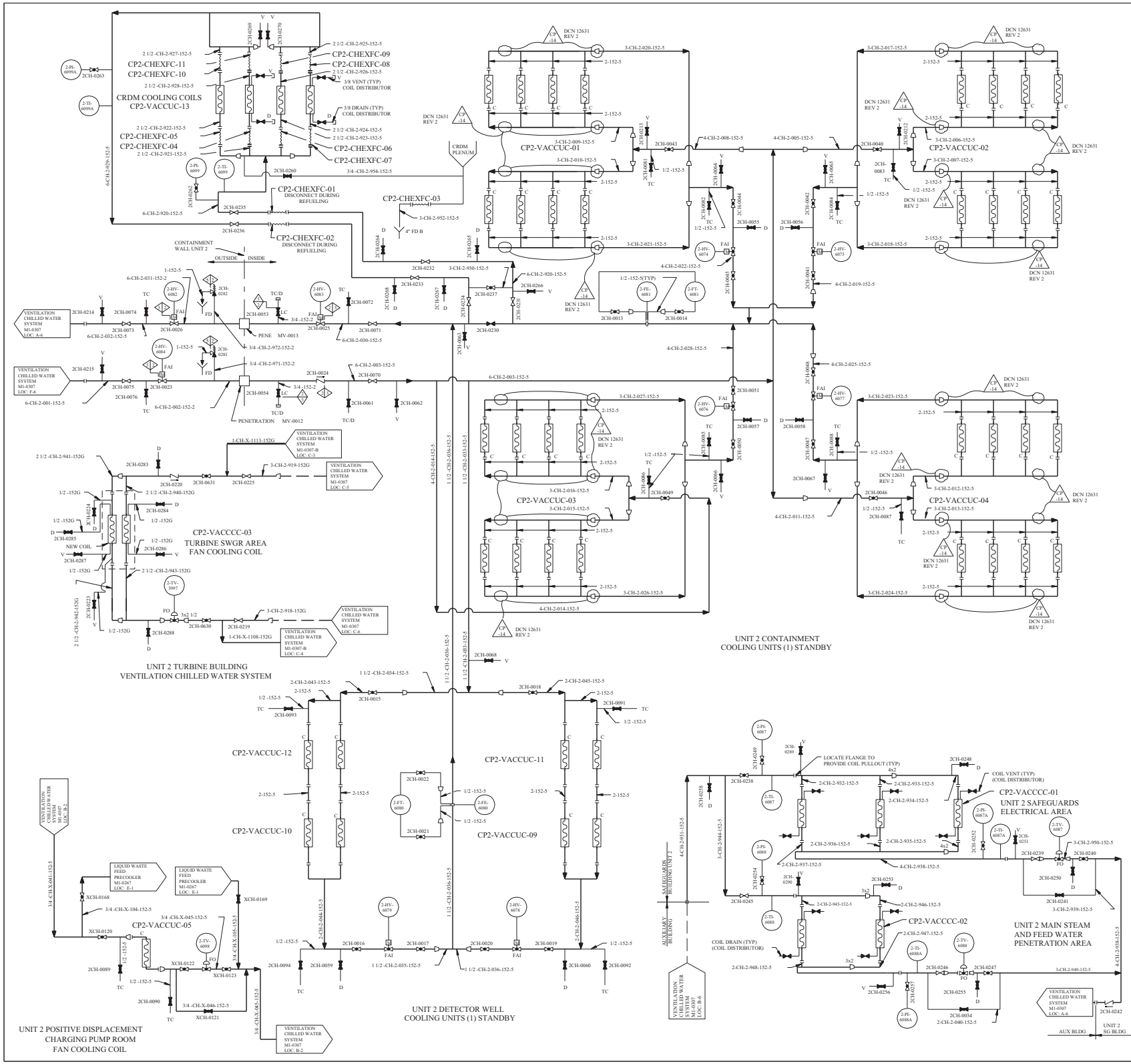

REV	DWN	CHKD	APVD	REMARKS
CP-14	CA 06-19 1991			THIS DRAWING REVISED TO INCORPORATE DESIGN CHANGE DCN 12631 REV 2.

NOTES

1. SEE DRAWING M1-0200 FOR I/C AND MECHANICAL SYMBOLS.
2. ALL DRAINS ON THIS DRAWING DRAIN TO LOCAL FLOOR DRAINS UNLESS OTHERWISE NOTED.
3. ALL VENTS, DRAINS AND INSTRUMENTATION PIPES HAVE LINE DESIGNATION 3/4 -152-5 IN ALL BUILDINGS EXCEPT TURBINE BLDG, WHICH ARE 3/4 -152G UNLESS OTHERWISE NOTED.
4. DELETED.

REFERENCES

M1-0307 FLOW DIAGRAM VENTILATION CHILLED WATER SYSTEM.

M1-0267 LIQUID WASTE PROCESSING SYSTEM.

FSAR FIGURE 9.4-11

THIS DRAWING CREATED ELECTRONICALLY

DRAWING M2-0307 REV CP-3
HAS BEEN SPLIT INTO THE FOLLOWING SHEETS:
M2-0307
M2-0307-A

CLASS I
(NUCLEAR SAFETY-RELATED)
SAFETY CLASS 1 SEISMIC CATEGORY I
SAFETY CLASS 2 CLASS 1E
SAFETY CLASS 3 ASSOCIATED CIRCUITS

TXU ELECTRIC
CPSES
GLEN ROSE, TEXAS

FLOW DIAGRAM - VENTILATION CHILLED WATER SYSTEM

DWG. NO. M2-0307 SH. NO. - REV. CP-14

REF CK:DP-P1/18/12/97

SSSSSSSDATESSSSSS

me00011d.dgn

REV	DWN	CHK'D	APV'D	REMARKS
CP-29	DLK 07-17-2017	GAW 07-17-2017	MHF 07-17-2017	THIS DRAWING REVISED TO EDITORIALLY ADD FSAR FIGURE NUMBER.

NOTES:

1. SEE DRAWING M1-0200 FOR I/C AND MECHANICAL SYMBOLS.
2. ALL DRAINS ON THIS DRAWING DRAIN TO LOCAL FLOOR DRAINS UNLESS OTHERWISE NOTED.
3. ALL VENTS, DRAINS AND INSTRUMENTATION PIPES HAVE LINE DESIGNATION □-152-5 IN ALL BUILDINGS EXCEPT TURBINE BLDG, WHICH ARE □-152G UNLESS OTHERWISE NOTED.
4. TEMPORARY STRAINERS ARE PLACED IN THE SPOOL PIECES DURING INITIAL FLUSHING OPERATIONS. THEY MUST BE REMOVED AT PLANT START-UP.
5. DELETED
6. X-FS-6070A IS ABANDONED IN PLACE.
7. CONNECTIONS ARE FOR COMPENSATORY ACTIONS IF THE INSTALLED UNITS ARE UNABLE TO PROVIDE ADEQUATE COOLING.

REFERENCES:

M1-0307	FLOW DIAGRAM VENTILATION CHILLED WATER SYSTEM.
M2-0210	FLOW DIAGRAM CIRCULATING WATER SYSTEM.

* - SUPPLIED BY VENDOR.

CP-29

FSAR FIGURE 9.4-11

THIS DRAWING CREATED ELECTRONICALLY

DRAWING M2-0307 REV CP-3 HAS BEEN SPLIT INTO THE FOLLOWING SHEETS:
M2-0307
M2-0307-A

ITEM	CPX-CHCICE-07	CPX-CHCICE-09
A	6-CH-X-1030-152G	6-CH-X-1052-152G
B	3-CH-X-1029-152G	3-CH-X-1051-152G
C	3-CH-X-1070-152G	3-CH-X-1068-152G
D	XCH-0635	XCH-0631
E	XCH-0636	XCH-0632
F	XCH-0637	XCH-0633
G	CPX-CHFHCH-17	CPX-CHFHCH-06

CLASS II

LUMINANT
CPNPP
GLEN ROSE, TEXAS

FLOW DIAGRAM - VENTILATION CHILLED WATER SYSTEM

DWG. NO.	SH. NO.	REV.
M2-0307	A	CP-29

me00081w.dgn A M2-0307-A FINAL PRINT

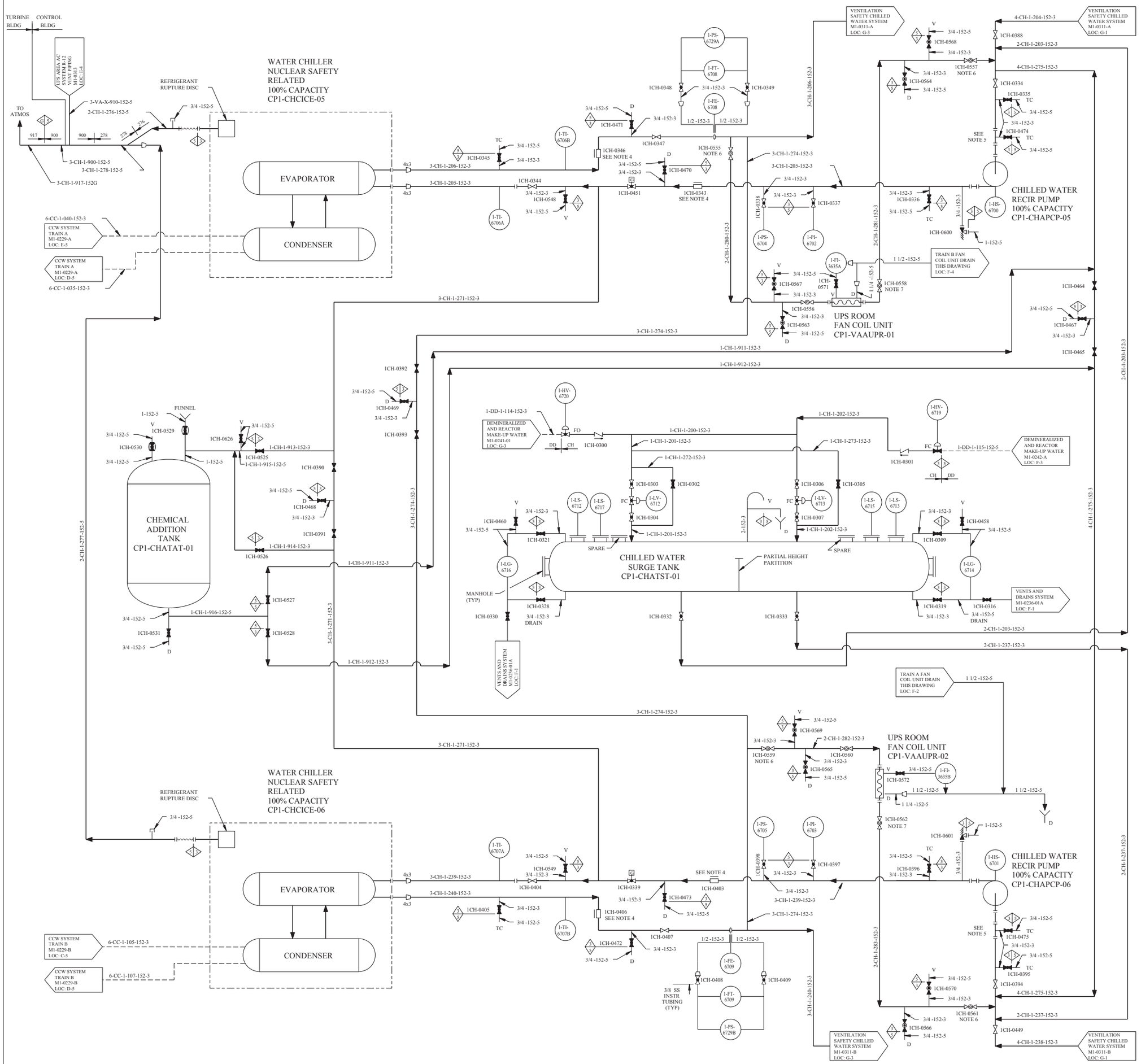

REV	DWN	CHK	APVD	REMARKS
CP-30	JRMC 04-26-2006	SM 04-27-2006		THIS DRAWING REVISED TO INCORPORATE DESIGN CHANGE FDA-2006-001196-01-00 PER SK-0013-06-001196-01-00.

NOTES:

1. FOR MECHANICAL SYMBOLS AND NOTES SEE DWG M1-0200.
2. THE PIPE CATEGORY FOR ALL ROOT VALVE LINES, TEST CONNECTIONS, DRAINS AND VENTS WILL BE THE SAME AS THE MAIN PROCESS LINE, UNLESS OTHERWISE NOTED.
3. UNLESS OTHERWISE NOTED, ALL DRAINS COLLECTED AS FOLLOWS:
   DRAINS FROM FAN COIL UNITS BY LOCAL DRAIN SYSTEM.
   DRAINS FROM PROCESS LINES AND EQUIPMENT BY CCW DRAIN SYSTEM.
4. REMOVE CHECK VALVE INTERNALS, ABANDON VALVE BODIES 1CH-0343 , 1CH-0346 , 1CH-0403 AND 1CH-0406 IN PLACE.
5. TEMPORARY STRAINERS CP1-CHSRPS-01 AND CP1-CHSRPS-02 ARE PLACED IN SPOOL PIECES DURING INITAL FLUSHING OPERATIONS. STRAINERS MUST BE REMOVED AT PLANT START-UP. THE TEMPORARY STRAINERS CAN BE RE-INSTALLED FOR POST MAINTENANCE ACTIVITY. R
6. VALVE IS FIXED IN THE OPEN POSITION BY A WELDED FASTENER.
7. THROTTLE VALVE DOWNSTREAM OF EACH FAN COIL UNIT TO BE LOCKED IN POSITION (LIP) AFTER BALANCING OF CHILLED WATER FLOW THOUGH EACH COIL.

REFERENCES:

M1-0229-A	FLOW DIAGRAM COMPONENT COOLING WATER SYSTEM SH 2 OF 8
M1-0229-B	FLOW DIAGRAM COMPONENT COOLING WATER SYSTEM SH 3 OF 8
M1-0236-01A	FLOW DIAGRAM VENTS AND DRAINS SYSTEM SAFEGUARDS AND AUX BLDG
M1-0241-01	FLOW DIAGRAM DEMINERALIZED AND REACTOR MAKE-UP WATER SH 3 OF 6
M1-0242-A	FLOW DIAGRAM DEMINERALIZED AND REACTOR MAKE-UP WATER SH 4 OF 5
M1-0311-A	FLOW DIAGRAM VENTILATION SAFETY CHILLED WATER SYSTEM
M1-0311-B	FLOW DIAGRAM VENTILATION SAFETY CHILLED WATER SYSTEM
M1-0313	FLOW DIAGRAM VENTILATION AAP BLDG AND CONTROL BLDG UPS AREA A/C SYSTEMS

FSAR FIGURE 9.4-12

THIS DRAWING CREATED ELECTRONICALLY

DRAWING M1-0311 REV CP-9
HAS BEEN SPLIT INTO THE FOLLOWING SHEETS:

M1-0311
M1-0311-A
M1-0311-B

CLASS I
(NUCLEAR SAFETY-RELATED)
SAFETY CLASS 1 — SEISMIC CATEGORY I
SAFETY CLASS 2 — CLASS 1E
SAFETY CLASS 3 — ASSOCIATED CIRCUITS

LUMINANT
CPSES
GLEN ROSE, TEXAS

FLOW DIAGRAM
VENTILATION
SAFETY CHILLED WATER SYSTEM

DWG. NO.	SH. NO.	REV.
M1-0311	-	CP-30

FINAL PRINT

REF CKD CP-24 3/10/98

me683600.dgn

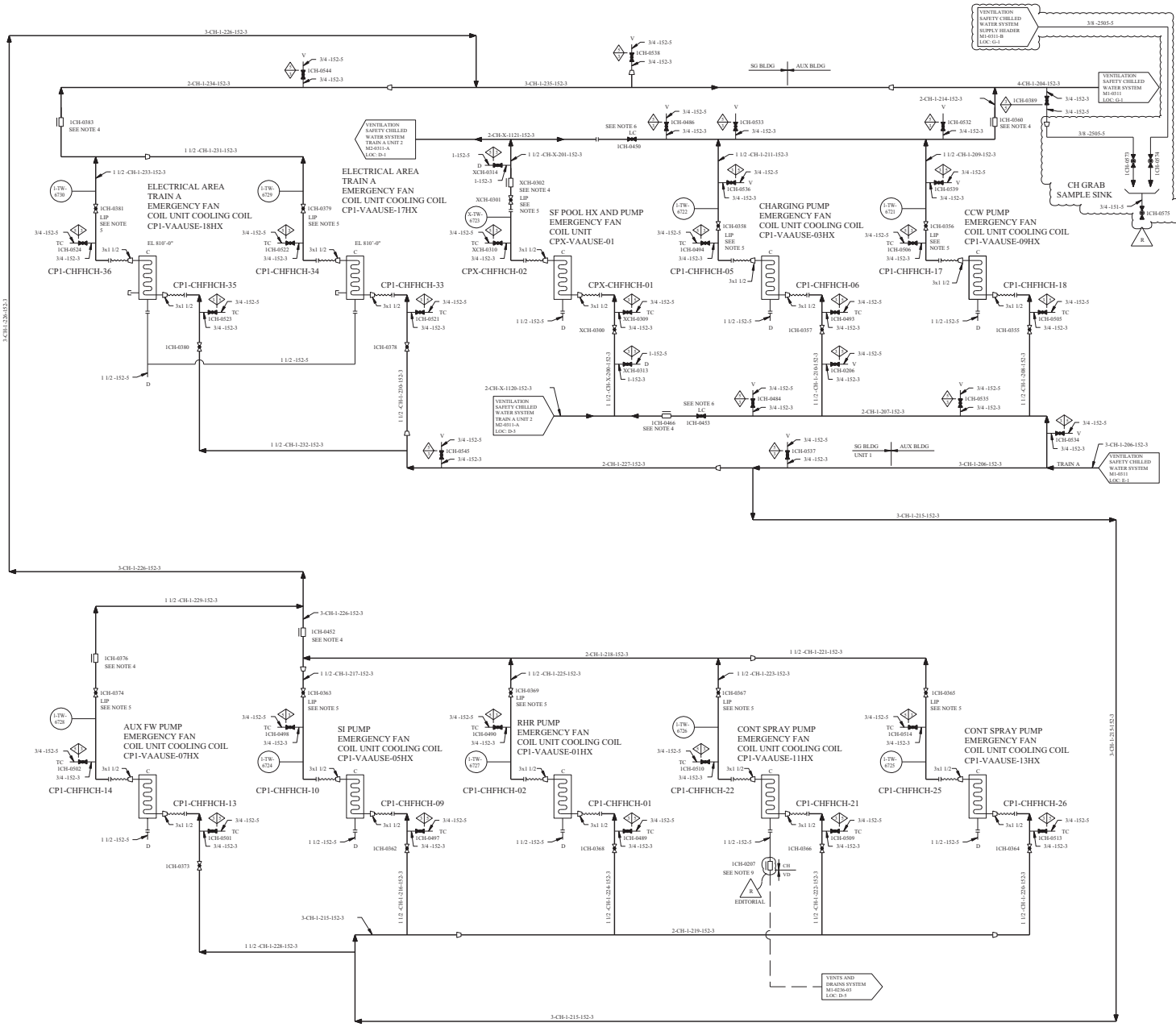

REV	DWN	CHKD	APVD	REMARKS
CP-11	HAK 10-25-2006	DWS 10-25-2006		THIS DRAWING REVISED TO INCORPORATE DESIGN CHANGE. EDA 2006-00-0150-01-00 PER SLAN06-00-00-0150-01-00. EDITORIAL CHANGE AS NOTED.

NOTES:

1. FOR MECHANICAL SYMBOLS AND NOTES SEE DWG M1-0200.
2. THE PIPE CATEGORY FOR ALL ROOT VALVE LINES, TEST CONNECTIONS, DRAINS AND VENTS WILL BE THE SAME AS THE MAIN PROCESS LINE, UNLESS OTHERWISE NOTED.
3. UNLESS OTHERWISE NOTED, ALL DRAINS COLLECTED AS FOLLOWS:
   DRAINS FROM FAN COIL UNITS BY LOCAL DRAIN SYSTEM.
   DRAINS FROM PROCESS LINES AND EQUIPMENT BY CCW DRAIN SYSTEM.
4. REMOVE CHECK VALVE INTERNALS, ABANDON VALVE BODIES 1CH-0360 , 1CH-0376 , 1CH-0383 , 1CH-0452 , 1CH-0466 AND XCH-0302 IN PLACE.
5. THROTTLE VALVE DOWNSTREAM OF EACH FAN COIL UNIT TO BE LOCKED IN POSITION (LIP) AFTER BALANCING OF CHILLED WATER FLOW THROUGH EACH COIL.
6. THIS IS A UNIT ISOLATION VALVE AND SHALL BE NORMALLY OPEN WHEN CHILLED WATER IS PROVIDED BY UNIT 1 CH AND LOCKED CLOSED WHEN CHILLED WATER IS PROVIDED BY UNIT 2 CH.
7. DELETED
8. DELETED
9. INTERNALS REMOVED FROM VALVE . 1CH-0207

REFERENCES:

M1-0236-03	FLOW DIAGRAM VENTS AND DRAINS SYSTEM SAFEGUARDS BLDG
	FLOW DIAGRAM VENTILATION SAFETY
M2-0311	CHILLED WATER SYSTEM
M1-0311	FLOW DIAGRAM VENTILATION SAFETY CHILLED WATER SYSTEM

FSAR FIGURE 9.4-12

THIS DRAWING CREATED ELECTRONICALLY

DRAWING M1-0311 REV CP-9 HAS BEEN SPLIT INTO THE FOLLOWING SHEETS:

- M1-0311
- M1-0311-A
- M1-0311-B

CLASS I
(NUCLEAR SAFETY-RELATED)
SAFETY CLASS 1 SEISMIC CATEGORY I
SAFETY CLASS 2 CLASS 1E
SAFETY CLASS 3 ASSOCIATED CIRCUITS

TXU ELECTRIC
CPSES
GLEN ROSE, TEXAS

FLOW DIAGRAM
VENTILATION
SAFETY CHILLED WATER SYSTEM

DWG. NO.	SH. NO.	REV.
M1-0311	A	CP-11

me374200.dgn M1-0311-A

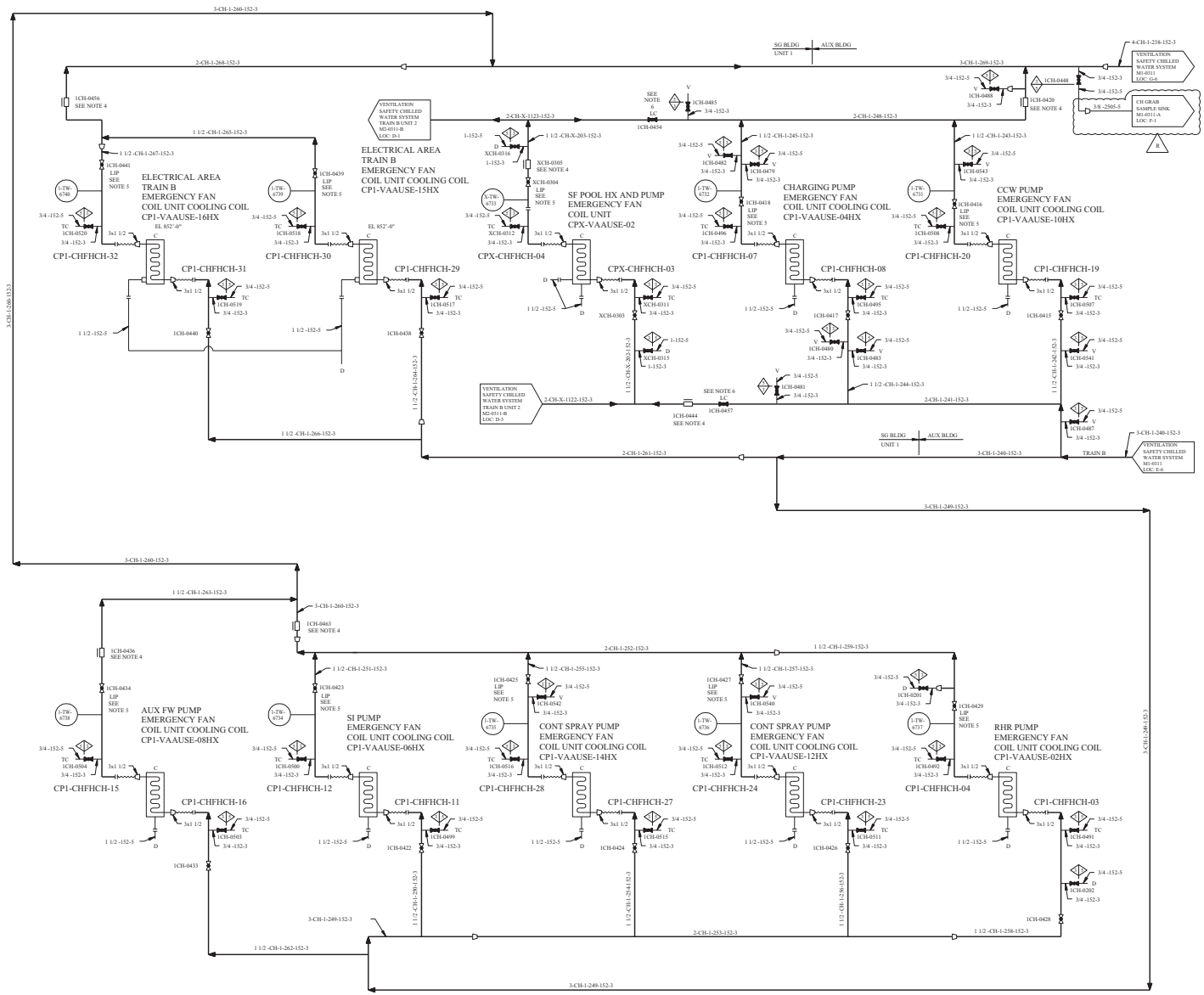

REV	DWN	CHKD	APVD	REMARKS
CP-9	DLR 09.27 2000	RSS 09.28 2001		THIS DRAWING REVISED TO INCORPORATE DESIGN CHANGE FDA 2000-001458-01-00 PER SK-0007-00-001458-01-00.

NOTES:

1. FOR MECHANICAL SYMBOLS AND NOTES SEE DWG M1-0200.
2. THE PIPE CATEGORY FOR ALL ROOT VALVE LINES, TEST CONNECTIONS, DRAINS AND VENTS WILL BE THE SAME AS THE MAIN PROCESS LINE, UNLESS OTHERWISE NOTED.
3. UNLESS OTHERWISE NOTED, ALL DRAINS COLLECTED AS FOLLOWS:
   DRAINS FROM FAN COIL UNITS BY LOCAL DRAIN SYSTEM.
   DRAINS FROM PROCESS LINES AND EQUIPMENT BY CCW DRAIN SYSTEM.
4. REMOVE CHECK VALVE INTERNALS, ABANDON VALVE BODIES 1CH-0420 , 1CH-0436 , 1CH-0444 , 1CH-0456 , 1CH-0463 AND XCH-0305 IN PLACE.
5. THROTTLE VALVE DOWNSTREAM OF EACH FAN COIL UNIT TO BE LOCKED IN POSITION (LIP) AFTER BALANCING OF CHILLED WATER FLOW THROUGH EACH COIL.
6. THIS IS A UNIT ISOLATION VALVE AND SHALL BE NORMALLY OPEN WHEN CHILLED WATER IS PROVIDED BY UNIT 1 CH AND LOCKED CLOSED WHEN CHILLED WATER IS PROVIDED BY UNIT 2 CH.
7. DELETED
8. DELETED

REFERENCES:

M1-0311	FLOW DIAGRAM VENTILATION SAFETY CHILLED WATER SYSTEM
M2-0311	FLOW DIAGRAM VENTILATION SAFETY CHILLED WATER SYSTEM

FSAR FIGURE 9.4-12

THIS DRAWING CREATED ELECTRONICALLY

DRAWING M1-0311 REV CP-9
HAS BEEN SPLIT INTO THE FOLLOWING SHEETS:
M1-0311
M1-0311-A
M1-0311-B

CLASS I
(NUCLEAR SAFETY-RELATED)
SAFETY CLASS 1 SEISMIC CATEGORY I
SAFETY CLASS 2 CLASS 1E
SAFETY CLASS 3 ASSOCIATED CIRCUITS

TXU ELECTRIC
CPSES
GLEN ROSE, TEXAS

FLOW DIAGRAM
VENTILATION
SAFETY CHILLED WATER SYSTEM

DWG. NO. M1-0311 | SH. NO. B | REV. CP-9

mc374300.dgn M1-0311-B

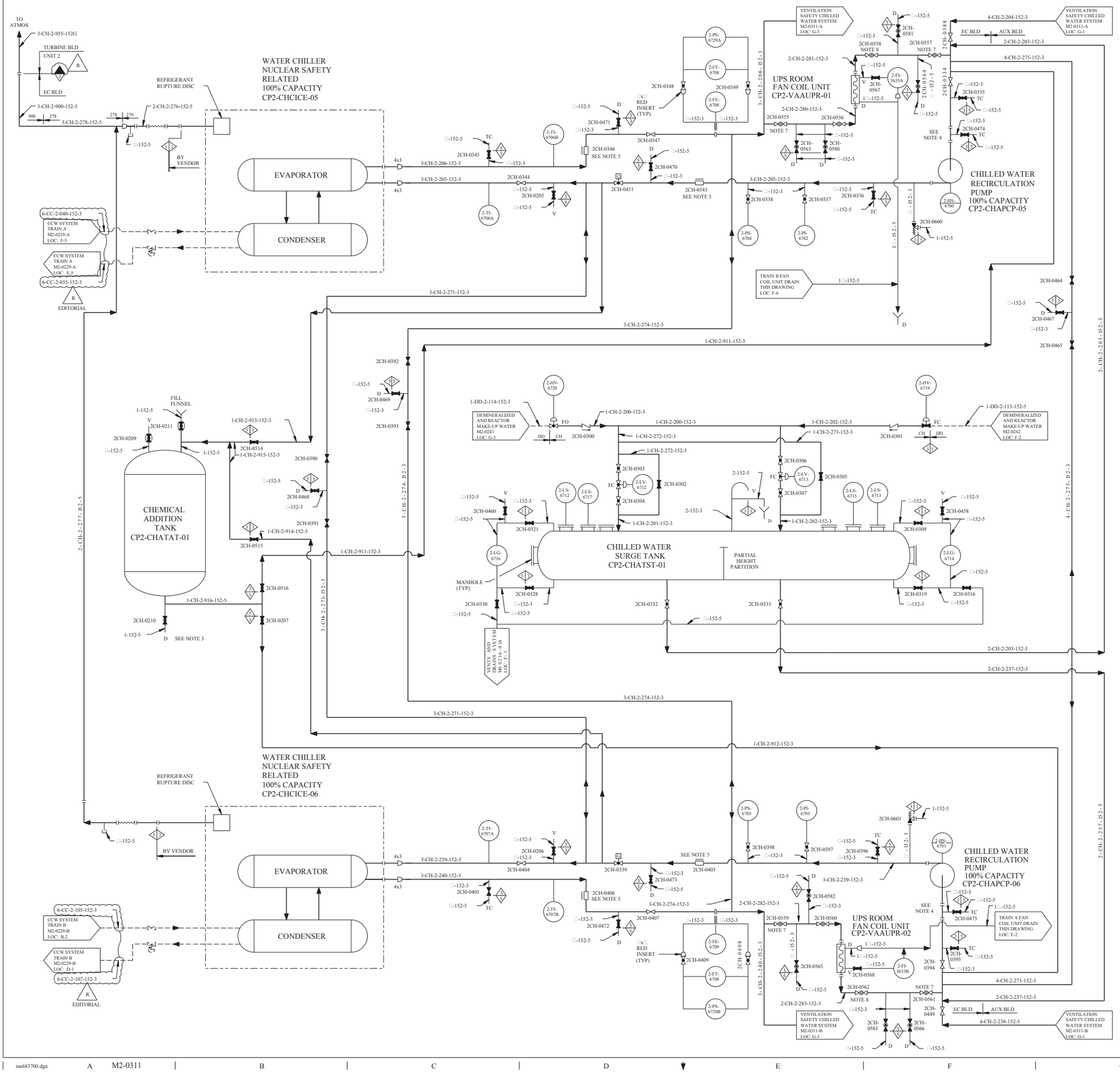

REV	DWN	CHKD	APVD	REMARKS
CP-19	DLK 04-26-2012	MM 04-27-2012		THIS DRAWING REVISED TO INCORPORATE DESIGN CHANGE FDA 2012-000074-01-00 PER SK-0001-12-000074-01-00. EDITORIAL CHANGES AS NOTED.

NOTES:

1. FOR MECHANICAL SYMBOLS AND NOTES SEE DWG M1-0200.
2. THE PIPE CATEGORY FOR ALL ROOT VALVE LINES, TEST CONNECTIONS, DRAINS AND VENTS WILL BE THE SAME AS THE MAIN PROCESS LINE UNLESS OTHERWISE NOTED.
3. DRAINS TO BE LOCALLY COLLECTED UNDER ADMINISTRATIVE CONTROLS.
4. TEMPORARY STRAINERS CP2-CHSRPS-01 AND CP2-CHSRPS-02 ARE PLACED IN SPOOL PIECES DURING INITIAL FLUSHING OPERATIONS. STRAINERS MUST BE REMOVED AT PLANT START-UP. THE TEMPORARY STRAINERS CAN BE RE-INSTALLED FOR POST MAINTENANCE ACTIVITY.
5. REMOVE CHECK VALVE INTERNALS, ABANDON VALVE BODIES IN PLACE.
6. UNLESS OTHERWISE NOTED ALL DRAINS COLLECTED BY LOCAL DRAIN SYSTEM EXCEPT AS FOLLOWS:
   CHILLED WATER SURGE TANK DRAIN BY CCW DRAIN SYSTEM VIA VENTS AND DRAIN SYSTEM
7. VALVE IS FIXED IN THE OPEN POSITION BY A WELDED FASTENER.
8. THROTTLE VALVE DOWNSTREAM OF EACH FAN COIL UNIT TO BE LOCKED IN POSITION (LIP) AFTER BALANCING OF CHILLED WATER THROUGH EACH COIL.

REFERENCES:

M2-0229-A	FLOW DIAGRAM COMPONENT COOLING WATER SYSTEM
M2-0229-B	FLOW DIAGRAM COMPONENT COOLING WATER SYSTEM
M2-0236-01A	FLOW DIAGRAM VENTS AND DRAIN SYSTEM
M2-0242	FLOW DIAGRAM DEMINERALIZED AND REACTOR MAKE-UP WATER SYSTEM
M2-0241-01	FLOW DIAGRAM DEMINERALIZED AND REACTOR MAKE-UP WATER SYSTEM
M2-0311-A	FLOW DIAGRAM VENTILATION SAFETY CHILLED WATER SYSTEM
M2-0311-B	FLOW DIAGRAM VENTILATION SAFETY CHILLED WATER SYSTEM

FSAR FIGURE 9.4-12

THIS DRAWING CREATED ELECTRONICALLY

DRAWING 2323-M2-0311 REV CP-3 HAS BEEN SPLIT INTO THE FOLLOWING SHEETS:
M2-0311
M2-0311-A
M2-0311-B

CLASS I
(NUCLEAR SAFETY-RELATED)
SAFETY CLASS 1, SAFETY CLASS 2, SAFETY CLASS 3 — SEISMIC CATEGORY I, CLASS 1E, ASSOCIATED CIRCUITS

LUMINANT
CPNPP
GLEN ROSE, TEXAS

FLOW DIAGRAM
VENTILATION
SAFETY CHILLED WATER SYSTEM

DWG. NO.	SH. NO.	REV.
M2-0311	-	CP-19

REF CKD CP-10 IV 8/97

SSSSSSSSDATESSSSSS

me683700.dgn A M2-0311 B C D E F G < FINAL PRINT > H

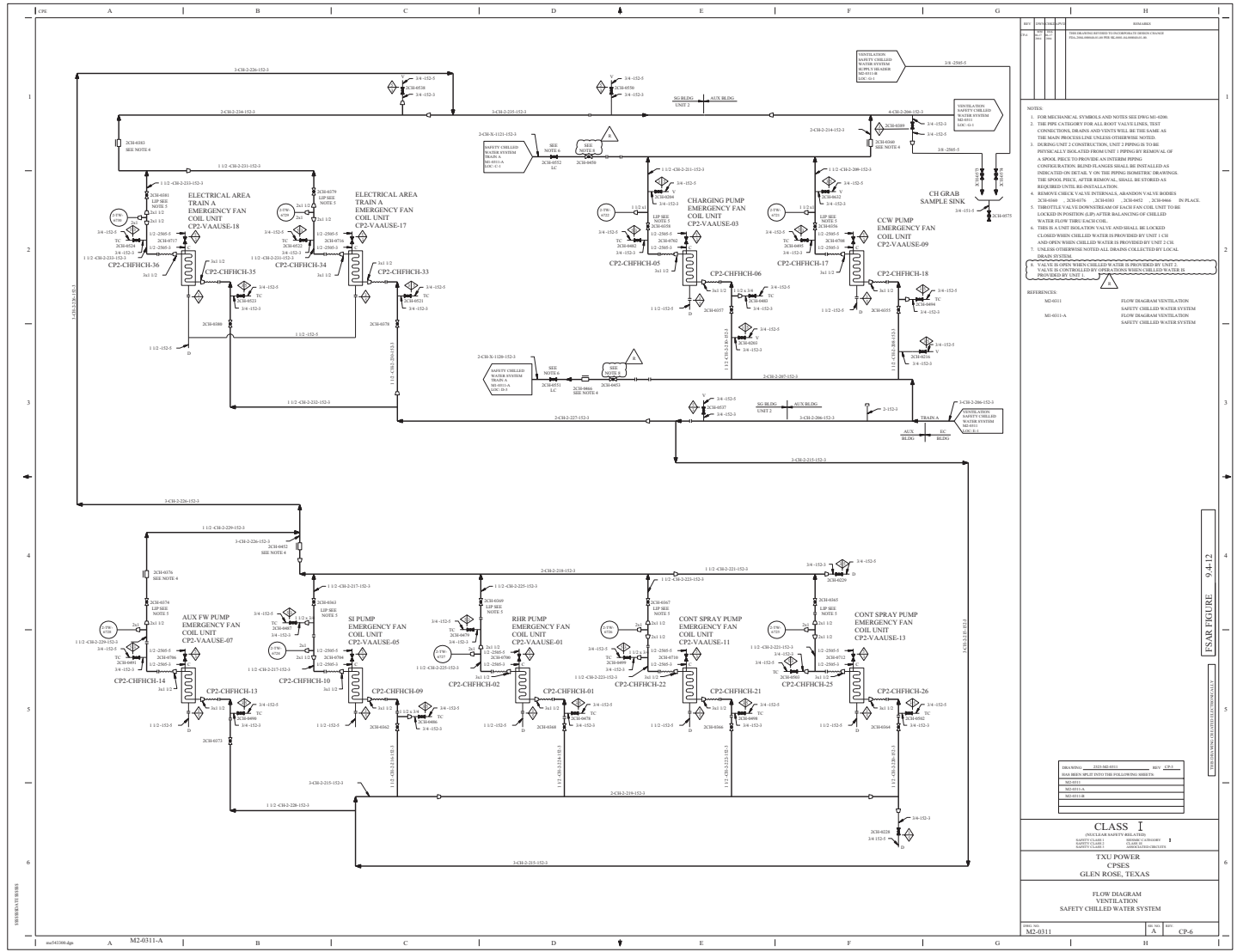

REV	DESCRIPTION	ORIGINATOR	APPD
19-0	THIS DRAWING REVISED TO INCORPORATE DESIGN CHANGE FCs_2006-0000-00-01 PER DC_2006_02-0000-01-00.	RDS Date	Date

NOTES:
1. FOR MECHANICAL SYMBOLS AND NOTES SEE DWG M1-0200.
2. THE PIPE CATEGORY FOR ALL ROOT VALVE LINES, TEST CONNECTIONS, DRAINS AND VENTS WILL BE THE SAME AS THE MAIN PROCESS LINE UNLESS OTHERWISE NOTED.
3. DURING UNIT 2 CONSTRUCTION, UNIT 2 PIPING IS TO BE PHYSICALLY ISOLATED FROM UNIT 1 PIPING BY REMOVAL OF A SPOOL PIECE TO PROVIDE AN INTERIM PIPING CONFIGURATION. BLIND FLANGES SHALL BE INSTALLED AS INDICATED ON DETAIL Y ON THE PIPING ISOMETRIC DRAWINGS. THE SPOOL PIECE, AFTER REMOVAL, SHALL BE STORED AS REQUIRED UNTIL RE-INSTALLATION.
4. REMOVE CHECK VALVE INTERNALS, ABANDON VALVE BODIES 2CH-0360 , 2CH-0376 ,2CH-0393 , 2CH-0452 , 2CH-9466 IN PLACE.
5. THROTTLE VALVE DOWNSTREAM OF EACH FAN COIL UNIT TO BE LOCKED IN POSITION (LIP) AFTER BALANCING OF CHILLED WATER FLOW THRU EACH COIL.
6. THIS IS A UNIT ISOLATION VALVE AND SHALL BE LOCKED CLOSED WHEN CHILLED WATER IS PROVIDED BY UNIT 1 CH AND OPEN WHEN CHILLED WATER IS PROVIDED BY UNIT 2 CH.
7. UNLESS OTHERWISE NOTED ALL DRAINS COLLECTED BY LOCAL DRAIN SYSTEMS.
8. VALVE IS OPEN WHEN CHILLED WATER IS PROVIDED BY UNIT 2. VALVE IS CONTROLLED BY OPERATIONS WHEN CHILLED WATER IS PROVIDED BY UNIT 1.

REFERENCES:

M2-0311	FLOW DIAGRAM VENTILATION SAFETY CHILLED WATER SYSTEM
M1-0311-A	FLOW DIAGRAM VENTILATION SAFETY CHILLED WATER SYSTEM

FSAR FIGURE 9.4-12

DRAWING 2103-M2-0311 REV CP-5
HAS BEEN SPLIT INTO THE FOLLOWING SHEETS:
M2-0311
M2-0311-A
M2-0311-B

CLASS I
(NUCLEAR SAFETY RELATED)
SAFETY CLASS 1 SAFETY CLASS 2 SAFETY CLASS 3 — SEISMIC CATEGORY I — ASSOCIATED CIRCUITS

TXU POWER
CPSES
GLEN ROSE, TEXAS

FLOW DIAGRAM
VENTILATION
SAFETY CHILLED WATER SYSTEM

DWG. NO.	REV. NO.	REV.
M2-0311	A	CP-6

M2-0311-A

ma541000.dgn

SHEET 1 OF 1

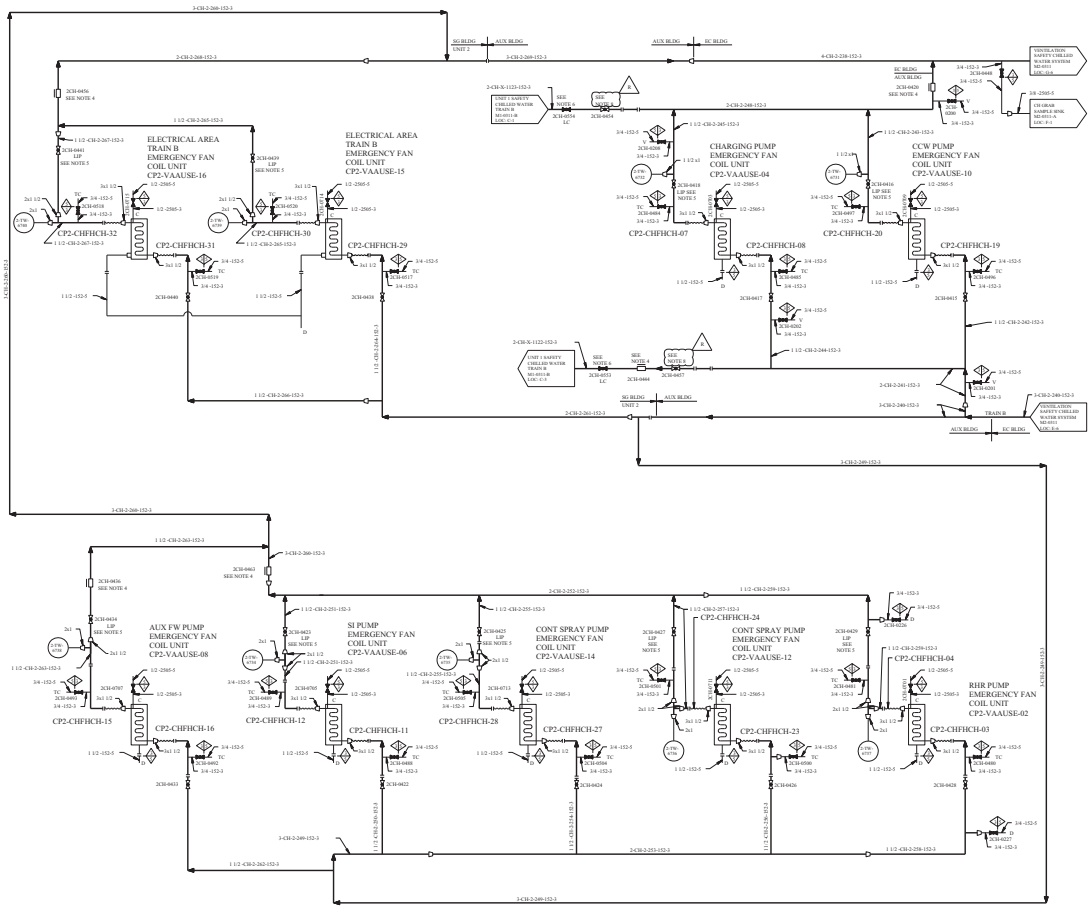

REV	DRWN	CHKD	APVD	REMARKS
9.4-7	MJ	MJ	MJ	THIS DRAWING REVISED TO INCORPORATE DESIGN CHANGE FDA_2004-0000-01-01 PER SE_0002-02-000-01-00

NOTES:

1. FOR MECHANICAL SYMBOLS AND NOTES SEE DWG M1-0200.
2. THE PIPE CATEGORY FOR ALL ROOT VALVE LINES, TEST CONNECTIONS, DRAINS AND VENTS WILL BE THE SAME AS THE MAIN PROCESS LINE UNLESS OTHERWISE NOTED.
3. DURING UNIT 2 CONSTRUCTION, UNIT 2 PIPING IS TO BE PHYSICALLY ISOLATED FROM UNIT 1 PIPING BY REMOVAL OF A SPOOL PIECE TO PROVIDE AN INTERIM PIPING CONFIGURATION. BLIND FLANGES SHALL BE INSTALLED AS INDICATED ON DETAIL Y ON THE PIPING ISOMETRIC DRAWINGS. THE SPOOL PIECE, AFTER REMOVAL, SHALL BE STORED AS REQUIRED UNTIL RE-INSTALLATION.
4. REMOVE CHECK VALVE INTERNALS, ABANDON VALVE BODIES 2CH-0420 , 2CH-0436 , 2CH-0444 , 2CH-0456 , 2CH-0463 IN PLACE.
5. THROTTLE VALVE DOWNSTREAM OF EACH FAN COIL UNIT TO BE LOCKED IN POSITION (LIP) AFTER BALANCING OF CHILLED WATER FLOW THRU EACH COIL.
6. THIS IS A UNIT ISOLATION VALVE AND SHALL BE LOCKED CLOSED WHEN CHILLED WATER IS PROVIDED BY UNIT 1 CH AND OPEN WHEN CHILLED WATER IS PROVIDED BY UNIT 2 CH.
7. UNLESS OTHERWISE NOTED ALL DRAINS COLLECTED BY LOCAL DRAIN SYSTEM.
8. VALVE IS OPEN WHEN CHILLED WATER IS PROVIDED BY UNIT 2. VALVE IS CONTROLLED BY OPERATIONS WHEN CHILLED WATER IS PROVIDED BY UNIT 1.

REFERENCES:

M2-0311	FLOW DIAGRAM VENTILATION SAFETY CHILLED WATER SYSTEM
M1-0311-B	FLOW DIAGRAM VENTILATION SAFETY CHILLED WATER SYSTEM

FSAR FIGURE 9.4-12

THIS DRAWING CLASSIFIED ELECTRONICALLY

DRAWING 2223-M2-0311 REV CP-1
HAS BEEN SPLIT INTO THE FOLLOWING SHEETS:

M2-0311
M2-0311-A
M2-0311-B

CLASS I
(NUCLEAR SAFETY RELATED)
SAFETY CLASS 1 HIGHWAY CATEGORY I
SAFETY CLASS 2 CLASS 1E
SAFETY CLASS 3 ASSOCIATED CIRCUITS

TXU POWER
CPSES
GLEN ROSE, TEXAS

FLOW DIAGRAM
VENTILATION
SAFETY CHILLED WATER SYSTEM

DWG. NO. M2-0311 | SH. NO. B | REV. CP-7

M2-0311-B

ms543400.dgn

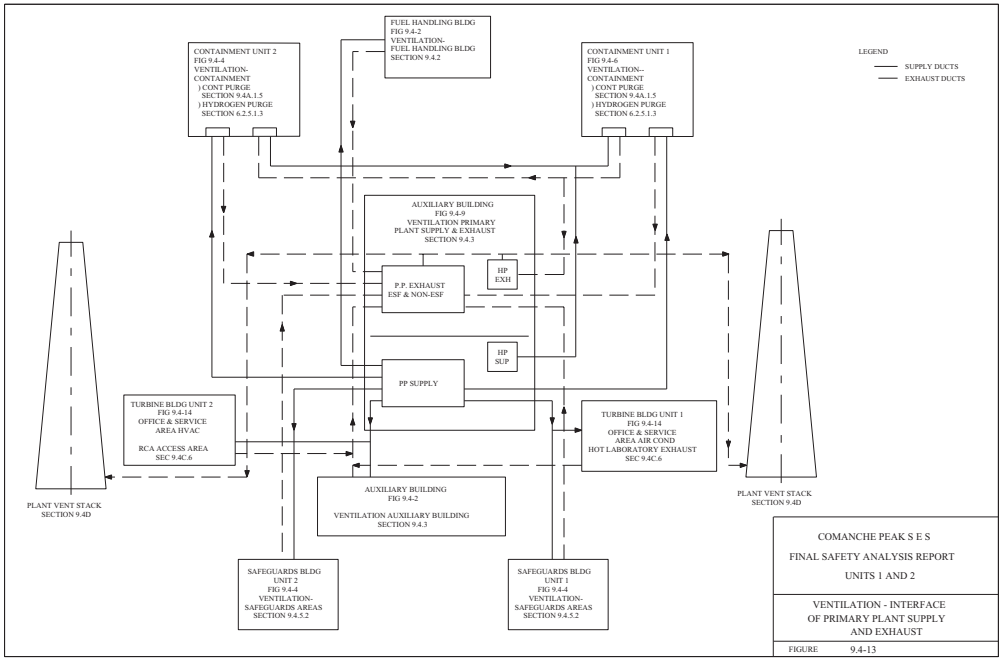

pr00007e.dgn

VENTILATION - INTERFACE
OF PRIMARY PLANT SUPPLY
AND EXHAUST

FIGURE 9.4-13

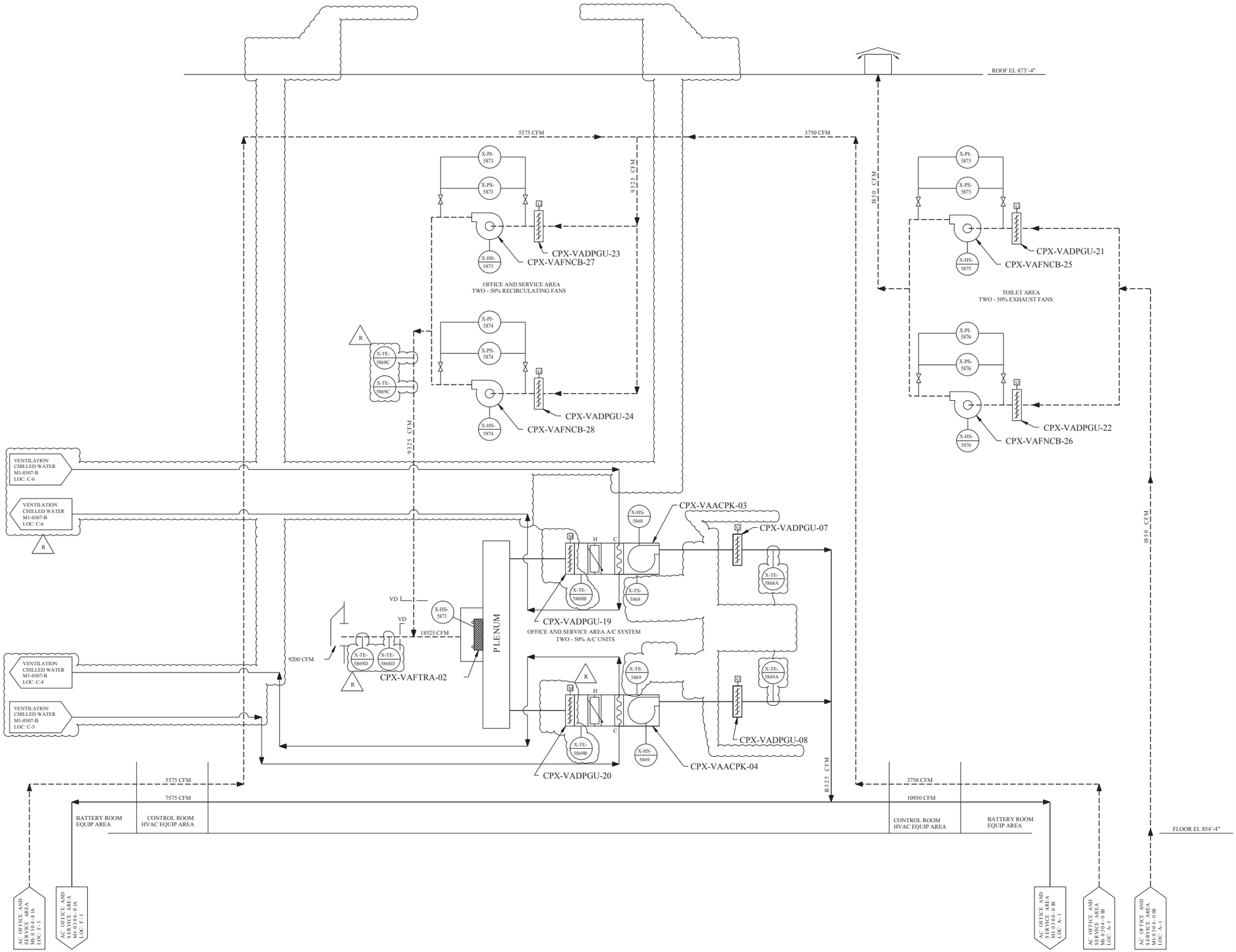

REV	DWN	CHKD	APVD	REMARKS
CP-14	MHF 10-03-2012	GAW 10-03-2012		THIS DRAWING REVISED TO INCORPORATE DESIGN CHANGE FDA 2009-001966-01-00 PER SK-0018-09-001966-01-00.

NOTES:

1. FOR HVAC ABBREVIATIONS AND SYMBOLS SEE M1-0313.
2. FOR I&C AND MECHANICAL SYMBOLS SEE M1-0200.
3. THIS DIAGRAM IS A SCHEMATIC REPRESENTATION AND IS INTENDED TO SHOW GENERAL AIR DISTRIBUTION AND FLOW PATHS.
4. BALANCING DAMPERS, REGISTERS, DIFFUSERS, FLEXIBLE CONNECTIONS AND ALL OTHER ACCESSORIES NOT SHOWN ON THIS DIAGRAM SHALL BE PROVIDED AS INDICATED ON THE HVAC ARRANGEMENT DRAWINGS AND SPECIFICATIONS.
5. ALL ROOM NAMES AND NUMBERS CORRESPOND TO ARCHITECTURAL DRAWINGS.
6. ALL AIRFLOW VALUES SHOWN ARE FOR NORMAL OPERATION AND DO NOT REFLECT DISTRIBUTION DURING OPERATION OF INTERMITTENT EQUIPMENT. GRILLS, REGISTERS, DIFFUSERS AND VOLUME DAMPERS SHALL BE SET FOR THE NORMAL OPERATION FLOWS. HVAC CONTRACTOR SHALL SUPPLY AIRFLOW TEST DATA INDICATING ACTUAL AIRFLOWS WITH INTERMITTENT EQUIPMENT IN OPERATION.
7. FIRE DAMPERS REMOVED FROM FLOW DIAGRAM ONLY. FOR LOCATIONS SEE DUCT LAYOUT DRAWINGS.
8. THE AIR FLOW RATES SHOWN ARE ORIGINAL DESIGN VALUES FOR INITIAL FLOW BALANCING AND DO NOT REPRESENT AS-BUILT. AIR FLOW IS BALANCED TO MAINTAIN ROOM TEMPERATURES WITHIN DESIGN DURING NORMAL OPERATION AND TO ENSURE THE DIRECTION OF AIR FLOW IS AS SHOWN.

REFERENCES:

1.	M1-0304-01A M1-0304-01B	FLOW DIAGRAM - AIR CONDITIONING OFFICE AND SERVICE AREA
2.	M1-0200	MECHANICAL DRAWING NOTES
3.	M1-0227	POTABLE AND SANITARY WATER SYSTEM
4.	M1-0313	FLOW DIAGRAM VENTILATION AAP BLDG AND CONTROL BLDG UPS AREA A/C SYSTEMS

FSAR FIGURE 9.4-14

THIS DRAWING CREATED ELECTRONICALLY

DRAWING 2323-M1-0304-01 REV CP-6
HAS BEEN SPLIT INTO THE FOLLOWING SHEETS:

M1-0304-01
M1-0304-01A
M1-0304-01B

CLASS II

LUMINANT
CPNPP
GLEN ROSE, TEXAS

FLOW DIAGRAM - AIR CONDITIONING
OFFICE AND SERVICE AREA

DWG. NO.	SH. NO.	REV.
M1-0304	01	CP-14

$$$$$$$DATE$$$$$$

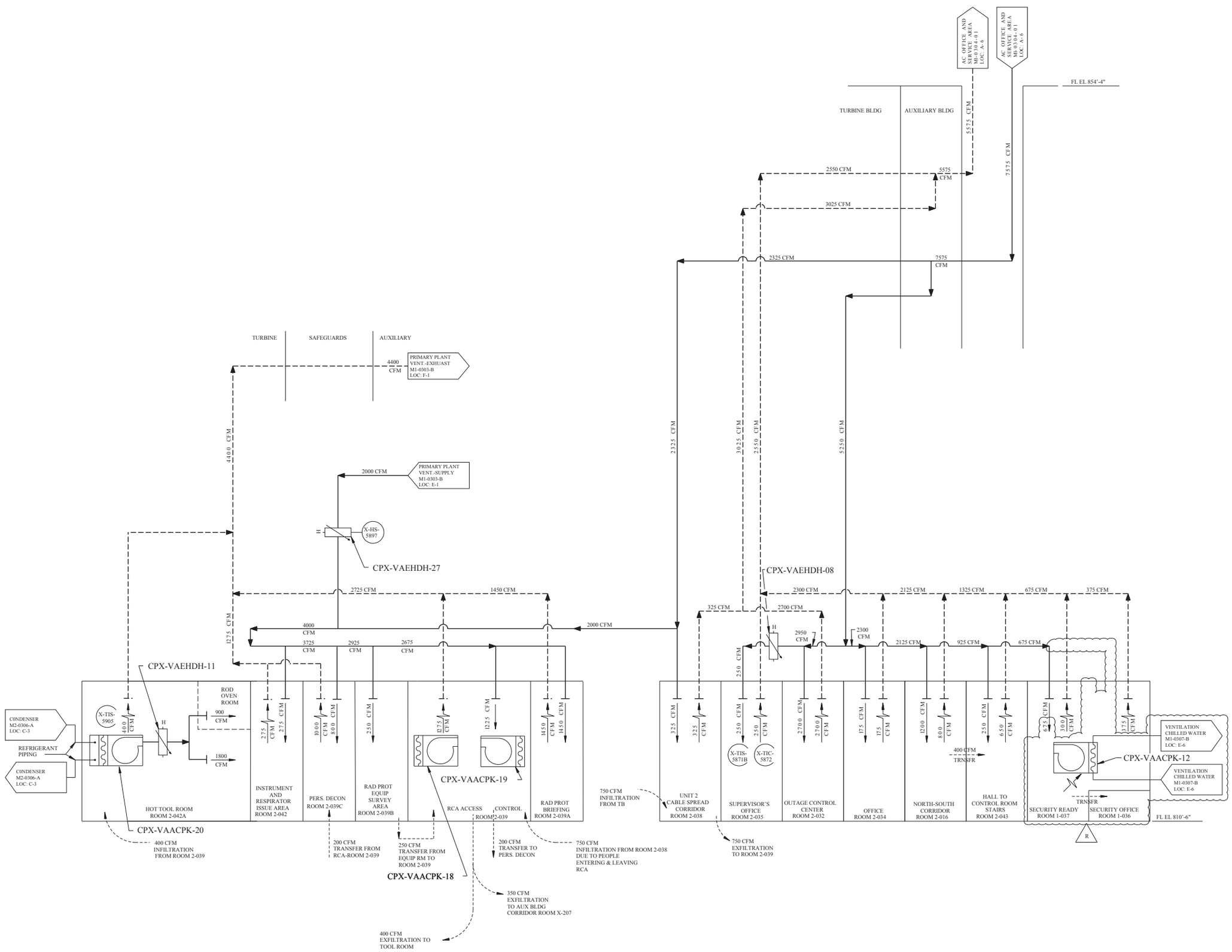

REV	DWN	CHK	APVD	REMARKS
CP-8	DLK 03-24-2011	MM 03-29-2011		THIS DRAWING REVISED TO INCORPORATE DESIGN CHANGE FDA 2009-001966-02-01 PER SK-0076-09-001966-02-00.

NOTES:

1. FOR HVAC ABBREVIATIONS AND SYMBOLS SEE M1-0313.
2. FOR I&C AND MECHANICAL SYMBOLS SEE M1-0200.
3. THIS DIAGRAM IS A SCHEMATIC REPRESENTATION AND IS INTENDED TO SHOW GENERAL AIR DISTRIBUTION AND FLOW PATHS.
4. BALANCING DAMPERS, REGISTERS, DIFFUSERS, FLEXIBLE CONNECTIONS AND ALL OTHER ACCESSORIES NOT SHOWN ON THIS DIAGRAM SHALL BE PROVIDED AS INDICATED ON THE HVAC ARRANGEMENT DRAWINGS AND SPECIFICATIONS.
5. ALL ROOM NAMES AND NUMBERS CORRESPOND TO ARCHITECTURAL DRAWINGS.
6. ALL AIRFLOW VALUES SHOWN ARE FOR NORMAL OPERATION AND DO NOT REFLECT DISTRIBUTION DURING OPERATION OF INTERMITTENT EQUIPMENT. GRILLS, REGISTERS, DIFFUSERS AND VOLUME DAMPERS SHALL BE SET FOR THE NORMAL OPERATION FLOWS. HVAC CONTRACTOR SHALL SUPPLY AIRFLOW TEST DATA INDICATING ACTUAL AIRFLOWS WITH INTERMITTENT EQUIPMENT IN OPERATION.
7. FIRE DAMPERS REMOVED FROM FLOW DIAGRAM ONLY. FOR LOCATIONS SEE DUCT LAYOUT DRAWINGS.
8. THE AIR FLOW RATES SHOWN ARE ORIGINAL DESIGN VALUES FOR INITIAL FLOW BALANCING AND DO NOT REPRESENT AS-BUILT. AIR FLOW IS BALANCED TO MAINTAIN ROOM TEMPERATURES WITHIN DESIGN DURING NORMAL OPERATION AND TO ENSURE THE DIRECTION OF AIR FLOW IS AS SHOWN.

REFERENCES:

1.	M1-0304-01 M1-0304-01B	FLOW DIAGRAM - AIR CONDITIONING OFFICE AND SERVICE AREA
2.	M1-0200	MECHANICAL DRAWING NOTES
3.	M1-0306	FLOW DIAGRAM VENTILATION AAP BLDG AND CONTROL BLDG UPS AREA A/C SYSTEMS
4.	M1-0303-B	FLOW DIAGRAM VENTILATION AUX BLDG

DRAWING 2323-M1-0304-01 REV CP-6
HAS BEEN SPLIT INTO THE FOLLOWING SHEETS:

- M1-0304-01
- M1-0304-01A
- M1-0304-01B

FSAR FIGURE 9.4-14

THIS DRAWING CREATED ELECTRONICALLY

NON–SAFETY

LUMINANT
CPNPP
GLEN ROSE, TEXAS

FLOW DIAGRAM - AIR CONDITIONING
OFFICE AND SERVICE AREA

DWG. NO.	SH. NO.	REV.
M1-0304	01A	CP-8

$$$$$$$DATE$$$$$$$

me514500.dgn A M1-0304-01A B C D E F G < FINAL PRINT > H

REV	DWN	CHKD	APVD	REMARKS
CP-13	DLK 10-24-2011	MM 10-29-2011		THIS DRAWING REVISED TO INCORPORATE DESIGN CHANGE FDA 2009-001966-02-01 PER SK-00056-09-001966-02-01. EDITORIAL CHANGES AS NOTED.

NOTES:

1. FOR HVAC ABBREVIATIONS AND SYMBOLS SEE M1-0313.
2. FOR I&C AND MECHANICAL SYMBOLS SEE M1-0200.
3. THIS DIAGRAM IS A SCHEMATIC REPRESENTATION AND IS INTENDED TO SHOW GENERAL AIR DISTRIBUTION AND FLOW PATHS.
4. BALANCING DAMPERS, REGISTERS, DIFFUSERS, FLEXIBLE CONNECTIONS AND ALL OTHER ACCESSORIES NOT SHOWN ON THIS DIAGRAM SHALL BE PROVIDED AS INDICATED ON THE HVAC ARRANGEMENT DRAWINGS AND SPECIFICATIONS.
5. ALL ROOM NAMES AND NUMBERS CORRESPOND TO ARCHITECTURAL DRAWINGS.
6. FOR CONTINUATION OF PLUMBING VENTS SEE M1-0237.
7. FOR CONTINUATION OF PLUMBING VENTS SEE M2-0237.
8. ALL AIRFLOW VALUES SHOWN ARE FOR NORMAL OPERATION AND DO NOT REFLECT DISTRIBUTION DURING OPERATION OF INTERMITTENT EQUIPMENT. GRILLS, REGISTERS, DIFFUSERS AND VOLUME DAMPERS SHALL BE SET FOR THE NORMAL OPERATION FLOWS. HVAC CONTRACTOR SHALL SUPPLY AIRFLOW TEST DATA INDICATING ACTUAL AIRFLOWS WITH INTERMITTENT EQUIPMENT IN OPERATION.
9. FUME HOOD FAN (KEWAUNEE SCIENTIFIC) SUPPLIED BY TU OPERATIONS.
10. DELETED
11. FIRE DAMPERS REMOVED FROM FLOW DIAGRAM ONLY. FOR LOCATIONS SEE DUCT LAYOUT DRAWINGS.
12. FUME HOOD FAN CPX-VAFNCB-30 MFG BY FISHER SCIENTIFIC.
13. RETAGGED FROM HOT CELL EXHAUST FAN, PO CPF-05244.
14. FOR CONTINUATION OF PLUMBING VENTS SEE M1-0227-02.
15. THE AIR FLOW RATES SHOWN ARE ORIGINAL DESIGN VALUES FOR INITIAL FLOW BALANCING AND DO NOT REPRESENT AS-BUILT. AIR FLOW IS BALANCED TO MAINTAIN ROOM TEMPERATURES WITHIN DESIGN DURING NORMAL OPERATION AND TO ENSURE THE DIRECTION OF AIR FLOW IS AS SHOWN.

REFERENCES:

1.	M1-0304-01 M1-0304-01A	FLOW DIAGRAM - AIR CONDITIONING OFFICE AND SERVICE AREA
2.	M1-0200	MECHANICAL DRAWING NOTES
3.	M1-0306	FLOW DIAGRAM VENTILATION TURBINE BLDG
4.	M1-0303-B	FLOW DIAGRAM VENTILATION AUX BLDG
5.	M1-0313	FLOW DIAGRAM VENTILATION AAP BLDG AND CONTROL BLDG UPS AREA A/C SYSTEMS
6.	M1-0237	FLOW DIAGRAM VENTS AND DRAINS TURBINE AND FUEL HANDLING BLDG
7.	M2-0237	FLOW DIAGRAM VENTS AND DRAINS
8.	M1-0307	FLOW DIAGRAM VENTILATION CHILLED WATER SYSTEM

FSAR FIGURE 9.4-14

THIS DRAWING CREATED ELECTRONICALLY

DRAWING 2323-M1-0304-01 REV CP-6
HAS BEEN SPLIT INTO THE FOLLOWING SHEETS:

M1-0304-01
M1-0304-01A
M1-0304-01B

NON-SAFETY

LUMINANT
CPNPP
GLEN ROSE, TEXAS

FLOW DIAGRAM - AIR CONDITIONING
OFFICE AND SERVICE AREA

DWG. NO.	SH. NO.	REV.
M1-0304	01B	CP-13

$$$$$$$DATE$$$$$$

me696900.dgn A M1-0304-01B

< FINAL PRINT >

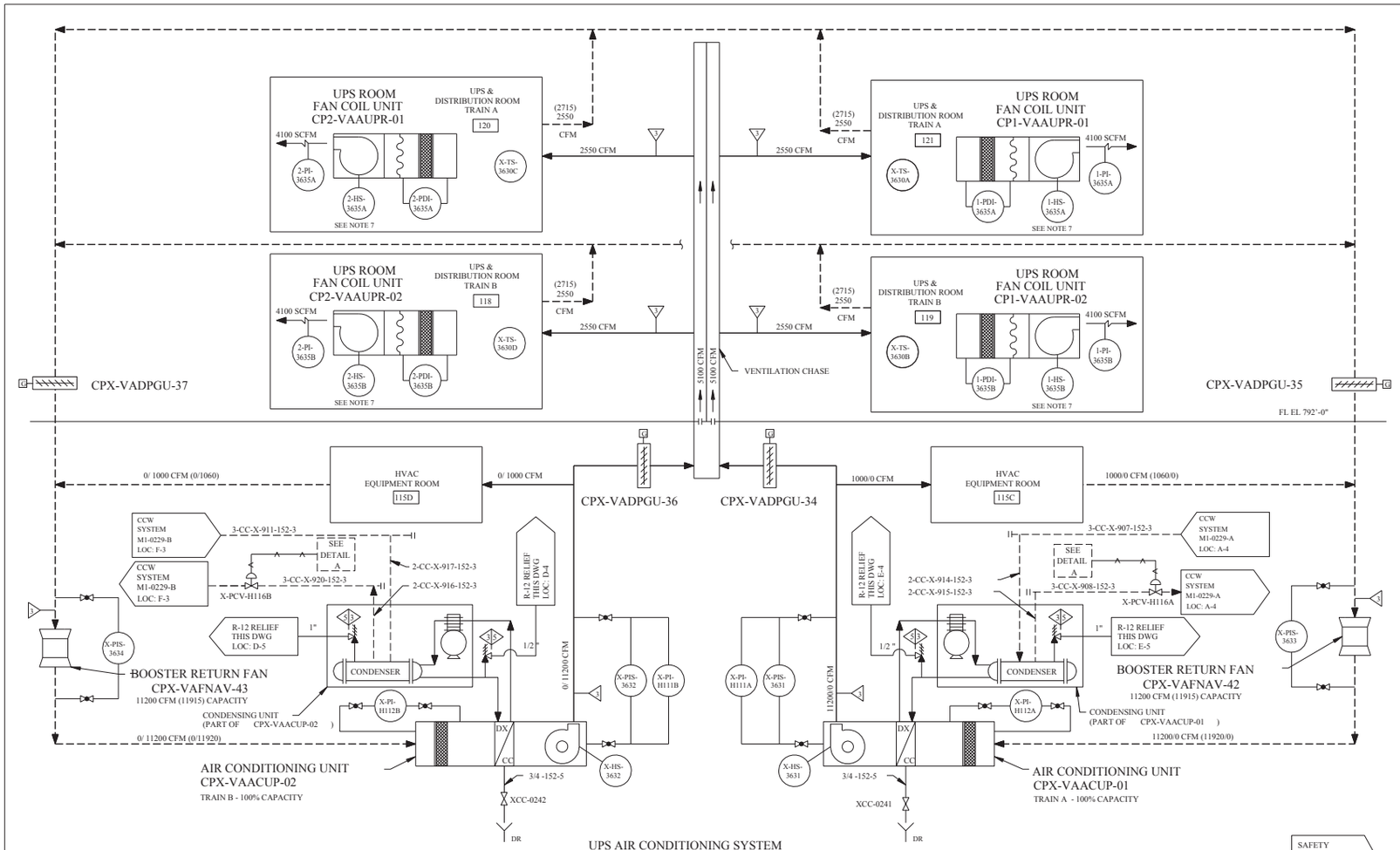

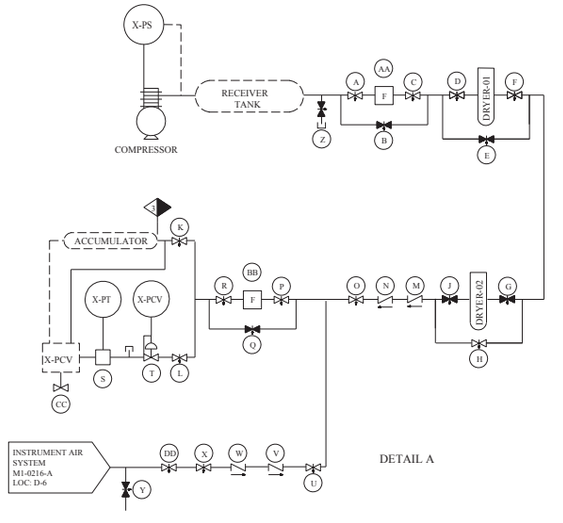

*** ACCUMULATOR IS EQUIPPED WITH AN INTERNAL CHECK VALVE.

CONTROL AIR SUPPLY
FOR UPS AIR CONDITIONING SYSTEM
COMPONENT LOCATION TAG NUMBERS

	TRAIN A	TRAIN B
PRESSURE SWITCH	X-PS-H105A	X-PS-H105B
COMPRESSOR	CPX-VACAUP-01	CPX-VACAUP-02
RECEIVER TANK	CPX-VAATUP-01	CPX-VAATUP-03
PREFILTER AA	CPX-VAFTUP-01	CPX-VAFTUP-02
DRYER-01	CPX-VADYUP-01	CPX-VADYUP-03
DRYER-02	CPX-VADYUP-02	CPX-VADYUP-04
PREFILTER BB	CPX-VAFTUP-04	CPX-VAFTUP-03
ACCUMULATOR ***	CPX-VAATUP-02	CPX-VAATUP-04
CONTROL VALVE CC	X-PCV-H116A	X-PCV-H116B
SERVICE VALVE A	XVA-0194	XVA-0205
BYPASS VALVE B	XVA-0195	XVA-0206
SERVICE VALVE C	XVA-0196	XVA-0207
SERVICE VALVE D	XVA-0197	XVA-0208
BYPASS VALVE E	XVA-0198	XVA-0209
SERVICE VALVE F	XVA-0199	XVA-0210
SERVICE VALVE G	XVA-0200	XVA-0211
BYPASS VALVE H	XVA-0201	XVA-0212
SERVICE VALVE J	XVA-0202	XVA-0213
CUTOFF VALVE K	XVA-0203	XVA-0214
CUTOFF VALVE L	XVA-0204	XVA-0215
SERVICE VALVE M	XVA-0236	XVA-0234
SERVICE VALVE N	XVA-0231	XVA-0229
SERVICE VALVE O	XVA-0227	XVA-0221
SERVICE VALVE P	XVA-0224	XVA-0218
BYPASS VALVE Q	XVA-0226	XVA-0220
SERVICE VALVE R	XVA-0225	XVA-0219
TRANSMITTER S	X-PT-H107A	X-PT-H107B
REGULATOR T	X-PCV-H116A-PR1	X-PCV-H116B-PR1
SERVICE VALVE U	XVA-0223	XVA-0217
SERVICE VALVE V	XVA-0230	XVA-0228
SERVICE VALVE W	XVA-0235	XVA-0233
SERVICE VALVE X	XVA-0222	XVA-0216
DRAIN VALVE Y	XVA-0232	-
TEST VALVE Z	XVA-0276	XVA-0275
SERVICE VALVE DD	-	XVA-0277

HVAC ABBREVIATIONS

AC	AIR CONDITIONING
AD	ACCESS DOOR
BOT	BOTTOM
CD	CEILING DIFFUSER
CFM	CUBIC FEET/MINUTE
CONT	CONTINUATION
DN	DOWN
DWG	DRAWING
EL	ELEVATION
EXH	EXHAUST
FAI	FAIL AS IS
FC	FAIL CLOSED
FO	FAIL OPEN
FCON	FLEXIBLE CONNECTION
FD	FIRE DAMPER
FL	FLOOR
NC	NORMALLY CLOSED
NNS	NON-NUCLEAR SAFETY
NO	NORMALLY OPEN
OAI	OUTSIDE AIR INTAKE
OPNG	OPENING
OPP	OPPOSITE
REG	REGISTER
RET	RETURN
SD	SUPPLY DAMPER
SPD	SPLITTER DAMPER
SUP	SUPPLY
SYS	SYSTEM
TYP	TYPICAL
VEL	VELOCITY
VOL	VOLUME
VD	VOLUME DAMPER
VPE	VELOCITY PRESSURE ELEMENT (PITOT TUBE)
WMS	WIRE MESH SCREEN
LC	LOCKED CLOSED
LO	LOCKED OPEN

SYMBOL LIST

- AUTOMATIC PARTICULATE FILTER
- PARTICULATE FILTER
- CARBON FILTER
- HEPA FILTER
- MIST ELIMINATOR
- COOLING COIL
- DAMPER OPPOSED BLADES
- DAMPER OPPOSED BLADES (MANUAL)
- DAMPER PARALLEL BLADES
- DAMPER PARALLEL BLADES (MANUAL)
- FIXED LOUVER (STORM PROOF)
- BUBBLE TIGHT DAMPER
- SINGLE BLADE DAMPER
- ISOLATION DAMPER
- ELECTRIC HEATING COIL
- UNIT HEATER (ELECTRIC)
- OUTSIDE AIR INTAKE
- AXIAL FAN
- ELECTRIC STRIP HEATER
- DAMPER COUNTERWEIGHT GRAVITY OPERATED
- MOTOR OPERATOR
- PISTON OPERATOR (MODULATING) (PNEUMATIC)
- DIRECT EXPANSION COOLING COIL
- HUMIDIFIER
- PROPELLER FAN
- VARIABLE INLET VANE
- COMPRESSOR
- FAN COIL UNIT
- SUPPLY AIR
- EXHAUST OR RETURN AIR
- AIR FLOW FROM OR TO OPEN AREAS (UNDUCTED)
- LOUVER IN DOOR
- FIRE PROTECTION COATING ON DUCT
- CENTRIFUGAL FAN
- VELOCITY PRESSURE ELEMENT (PITOT TUBE)
- ROOF MOUNTED FAN

REV	DWN	CHKD	APVD	REMARKS
CP-21	JRMC 12-17 2009	SM 12-17 2009		THIS DRAWING REVISED TO INCORPORATE DESIGN CHANGE FDA 2007-002527-01-00 PER SK-0005-07-002527-01-00.

NOTES:

1. FOR ABBREVIATIONS AND SYMBOLS SEE THIS DWG (E-5) AND (F-1) AND DWG M1-0200.
2. DELETED
3. THIS DIAGRAM IS A SCHEMATIC REPRESENTATION AND IS INTENDED TO SHOW GENERAL AIR DISTRIBUTION AND FLOW PATHS.
4. BALANCING DAMPERS, FIRE DAMPERS, REGISTERS DIFFUSERS, FLEXIBLE CONNECTIONS AND ALL OTHER ACCESSORIES NOT SHOWN ON THIS DIAGRAM SHALL BE PROVIDED AS INDICATED ON THE HVAC ARRANGEMENT DRAWINGS AND SPECIFICATIONS.
5. AIR FLOW QUANTITIES SHOWN ARE BASED ON A DENSITY OF 0.075 LB/FT OCCURRING AT THE STANDARD CONDITION OF DRY AIR AT 70°F AND 29.92" HG BAROMETER PRESSURE. QUANTITIES IN PARENTHESES ARE ACTUAL AIR FLOW RATES BASED ON DENSITY AT DESIGN CONDITIONS.
6. FOR INTERCONNECTING PIPING TO THE CONDENSER OF THE CONDENSING UNIT FOR UPS AND DISTRIBUTION ROOM AIR CONDITIONING UNIT SEE DWG M1-0229.
7. THIS HAND SWITCH IS LOCAL, MOUNTED ON THE ASSOCIATED EQUIPMENT.

REFERENCES:

M1-0200	MECHANICAL DRAWING NOTES AND SYMBOLS
M1-2313-01	INSTRUMENT & CONTROL DIAGRAM

FSAR FIGURE 9.4-15

THIS DRAWING CREATED ELECTRONICALLY

CLASS I
(NUCLEAR SAFETY-RELATED)
SAFETY CLASS 1 — SEISMIC CATEGORY I
SAFETY CLASS 2 — CLASS 1E
SAFETY CLASS 3 — ASSOCIATED CIRCUITS

LUMINANT
CPNPP
GLEN ROSE, TEXAS

FLOW DIAGRAM-VENTILATION
CONTROL BLDG
UPS AREA A/C SYSTEMS

DWG. NO. M1-0313 | SH. NO. - | REV. CP-21

REF CKD 3/6/97 CP-15

me967500.dgn A M1-0313

FINAL PRINT

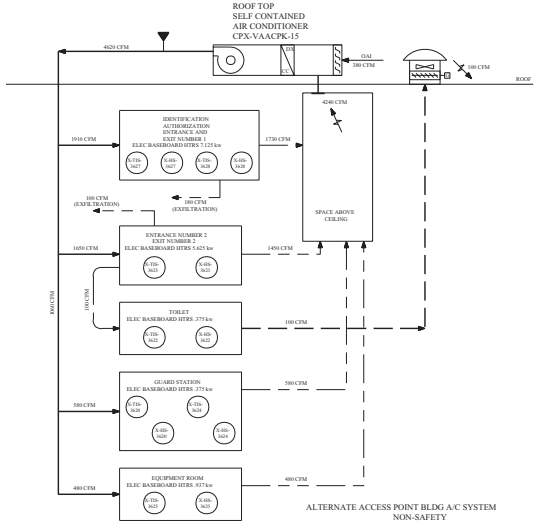

ALTERNATE ACCESS POINT BLDG A/C SYSTEM
NON-SAFETY

REV.	DATE	DRAFTER	REMARKS
CP-3	9/4/15	TSH	THIS DRAWING REVISED TO INCORPORATE DESIGN CHANGE TDA-3901-000366-02-00 PER SIL-00231-01-000366-02-00.

NOTES:

1. FOR ABBREVIATIONS AND SYMBOLS SEE DWG M1-0313 (E-5) AND (F-1) AND DWG M1-0200.
2. DELETED
3. THIS DIAGRAM IS A SCHEMATIC REPRESENTATION AND IS INTENDED TO SHOW GENERAL AIR DISTRIBUTION AND FLOW PATHS.
4. BALANCING DAMPERS, FIRE DAMPERS, REGISTERS DIFFUSERS, FLEXIBLE CONNECTIONS, AND ALL OTHER ACCESSORIES NOT SHOWN ON THIS DIAGRAM SHALL BE PROVIDED AS INDICATED ON THE HVAC ARRANGEMENT DRAWINGS AND SPECIFICATIONS.
5. AIR FLOW QUANTITIES SHOWN ARE BASED ON A DENSITY OF 0.075 LB/FT OCCURING AT THE STANDARD CONDITION OF DRY AIR AT 70°F AND 29.92" HG BAROMETER PRESSURE. QUANTITIES IN PARENTHESES ARE ACTUAL AIR FLOW RATES BASED ON DENSITY AT DESIGN CONDITIONS.
6. FOR INTERCONNECTING PIPING TO THE CONDENSER OF THE CONDENSING UNIT FOR UPS AND DISTRIBUTION ROOM AIR CONDITIONING UNIT SEE DWG M1-0229.
7. DELETED
8. DELETED
9. AIR FLOW RATES SHOWN ARE ORIGINAL DESIGN VALUES FOR INITIAL FLOW BALANCING AND DO NOT REPRESENT AS-BUILT. AIR FLOW IS BALANCED TO MAINTAIN ROOM TEMPERATURES WITHIN DESIGN DURING NORMAL OPERATION AND TO ENSURE THE DIRECTION OF AIR FLOW IS AS SHOWN.

9

REFERENCES:

M1-0200	MECHANICAL DRAWING NOTES AND SYMBOLS

FSAR FIGURE 9.4-15

THIS DRAWING IS DATA FILE CONTROLLED

DRAWING M1-0313 REV CP-9
HAS BEEN SPLIT INTO THE FOLLOWING SHEETS:
M1-0313
M1-0313-A

NON-SAFETY

TXU POWER
CPSES
GLEN ROSE, TEXAS

FLOW DIAGRAM-VENTILATION
ALTERNATE ACCESS POINT GUARDHOUSE

DWG. NO.	SH. NO.	REV.
M1-0313	A	CP-3

mc515800.dgn

M1-0313-A

SIEMENS/GAI ES5885

FIGURES 9.5-1 thru 9.5-42
HAVE BEEN DELETED

FIGURES 9.5-1 thru 9.5-42
HAVE BEEN DELETED

FIGURES 9.5-1 thru 9.5-42
HAVE BEEN DELETED

FIGURES 9.5-1 thru 9.5-42
HAVE BEEN DELETED

FIGURES 9.5-1 thru 9.5-42
HAVE BEEN DELETED

FIGURES 9.5-1 thru 9.5-42
HAVE BEEN DELETED

FIGURES 9.5-1 thru 9.5-42
HAVE BEEN DELETED

FIGURES 9.5-1 thru 9.5-42
HAVE BEEN DELETED

FIGURES 9.5-1 thru 9.5-42
HAVE BEEN DELETED

FIGURES 9.5-1 thru 9.5-42
HAVE BEEN DELETED

FIGURES 9.5-1 thru 9.5-42
HAVE BEEN DELETED

FIGURES 9.5-1 thru 9.5-42
HAVE BEEN DELETED

FIGURES 9.5-1 thru 9.5-42
HAVE BEEN DELETED

FIGURES 9.5-1 thru 9.5-42
HAVE BEEN DELETED

FIGURES 9.5-1 thru 9.5-42
HAVE BEEN DELETED

FIGURES 9.5-1 thru 9.5-42
HAVE BEEN DELETED

FIGURES 9.5-1 thru 9.5-42
HAVE BEEN DELETED

FIGURES 9.5-1 thru 9.5-42
HAVE BEEN DELETED

FIGURES 9.5-1 thru 9.5-42
HAVE BEEN DELETED

FIGURES 9.5-1 thru 9.5-42
HAVE BEEN DELETED

FIGURES 9.5-1 thru 9.5-42
HAVE BEEN DELETED

FIGURES 9.5-1 thru 9.5-42
HAVE BEEN DELETED

FIGURES 9.5-1 thru 9.5-42
HAVE BEEN DELETED

FIGURES 9.5-1 thru 9.5-42
HAVE BEEN DELETED

FIGURES 9.5-1 thru 9.5-42
HAVE BEEN DELETED

FIGURES 9.5-1 thru 9.5-42
HAVE BEEN DELETED

FIGURES 9.5-1 thru 9.5-42
HAVE BEEN DELETED

FIGURES 9.5-1 thru 9.5-42
HAVE BEEN DELETED

FIGURES 9.5-1 thru 9.5-42
HAVE BEEN DELETED

FIGURES 9.5-1 thru 9.5-42
HAVE BEEN DELETED

FIGURES 9.5-1 thru 9.5-42
HAVE BEEN DELETED

FIGURES 9.5-1 thru 9.5-42
HAVE BEEN DELETED

FIGURES 9.5-1 thru 9.5-42
HAVE BEEN DELETED

FIGURES 9.5-1 thru 9.5-42
HAVE BEEN DELETED

FIGURES 9.5-1 thru 9.5-42
HAVE BEEN DELETED

FIGURES 9.5-1 thru 9.5-42
HAVE BEEN DELETED

FIGURES 9.5-1 thru 9.5-42
HAVE BEEN DELETED

FIGURES 9.5-1 thru 9.5-42
HAVE BEEN DELETED

FIGURES 9.5-1 thru 9.5-42
HAVE BEEN DELETED

FIGURES 9.5-1 thru 9.5-42
HAVE BEEN DELETED

FIGURES 9.5-1 thru 9.5-42
HAVE BEEN DELETED

FIGURES 9.5-1 thru 9.5-42
HAVE BEEN DELETED

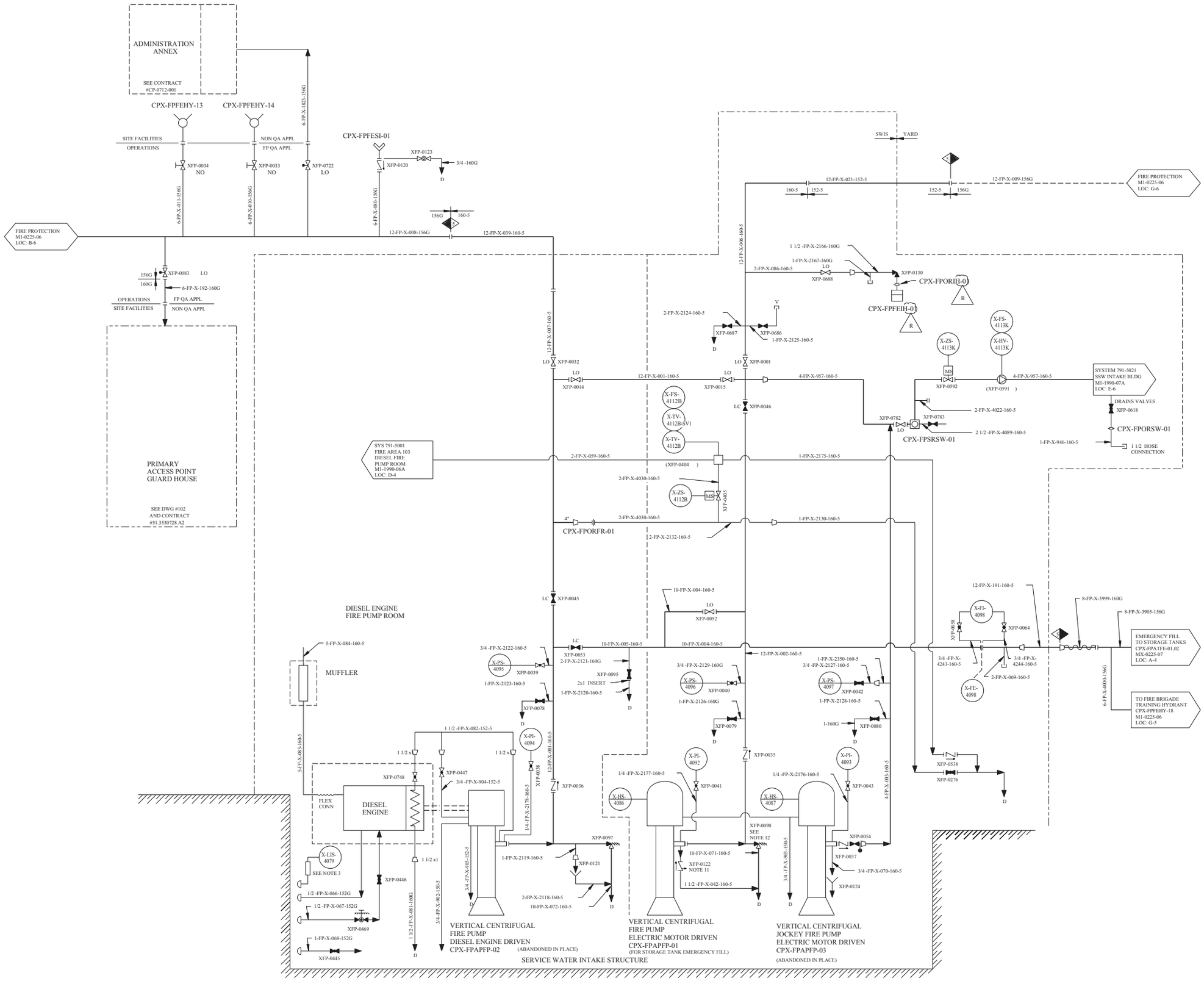

REV	DWN	CHKD	APVD	REMARKS
CP-23	DLK 04-08-2009	MH 04-09-2009		THIS DRAWING REVISED TO INCORPORATE DESIGN CHANGE FDA 2009-000339-01-00 PER SK-0001-09-000339-01-00.

NOTES:

1. DELETED
2. DELETED
3. ABANDONED IN PLACE.
4. DELETED
5. DELETED
6. FOR OTHER SYMBOLS AND NOTES SEE MECHANICAL SYMBOLS AND NOTES DRAWING M1-0200.
7. DELETED
8. UNLESS OTHERWISE NOTED, DRAINS COLLECTED BY LOCAL DRAIN SYSTEM UNDER ADMINISTRATIVE CONTROL.
9. DELETED
10. VALVE NUMBERS IN PARENTHESIS ARE VALVE BODY NUMBERS PER ECE 5.04-02 AND ARE ENTERED FOR HISTORICAL INFORMATION ONLY.
11. XFP-0122 IS AN AIR RELEASE CHECK VALVE INSTALLED WITH THE FLOW TOWARDS THE PUMP. SEE VL03-005055 FOR DETAILS.
12. VALVE TO BE NORMALLY SET AT 128 PSIG. RESET TO 165 PSIG WHEN PUMP IS USED AS AN ALTERNATE FIRE SUPPRESSION PUMP. 3 ±

LEGEND:

INSTRUMENT AND CONTROLS

U (FIRST LETTER IN BALLOON) - MONITOR
Z (FIRST LETTER IN BALLOON) - MONITOR
FOR EXPLANATION AND OTHER INSTR AND CONTROL SYMBOLS SEE NOTE 6

ABBREVIATIONS:

		STA	STATION
FIN FL EL	FINISHED FLOOR ELEVATION	CORR	CORRIDOR
BO	BY OTHERS	CONT	CONTINUATION
RED	REDUCER	GEN	GENERATOR
ECC	ECCENTRIC	RM	ROOM
DWG	DRAWING	BSMT	BASEMENT

EQUIPMENT:

- FIN FL — HOSE VALVE IN EXTERIOR MOUNTED HOSE CABINET-PIPE HEAT TRACED
- STRAINER WITH CLOSED DRAIN VALVE
- SIAMESE FIRE DEPT CONN FOR EMERGENCY FILL BY PUMP TRUCK
- INTERIOR FIRE HOSE STATION
- TWO WAY FIRE HYDRANT WITH HOSE HOUSE
- M — WATER MOTOR ALARM
- FIRE PROT WATER SUPPLY LINE
- SPECTACLE FLANGE (CLOSED)

VALVES:

- VALVE WITH CURB BOX-MECHANICAL END ON YARD PIPING FLANGED END ON HYDRANT PIPING
- DIVISION POST INDICATOR VALVE MECHANICAL JOINT ENDS (LOCKED OPEN UNLESS NOTED OTHERWISE)
- MS — VALVE WITH MONITORING SWITCH, FLANGED ENDS
- DELUGE VALVE
- ALARM CHECK VALVE
- AIR RELEASE CHECK VALVE

REFERENCE BLOCKS:

SYSTEM REFERENCE
SYSTEM 786-9121 CABLE SPREADING RM-SOUTH HALF — DIRECTION OF FLOW
SYSTEM LOCATION
FOR CONT SEE DWG MI-0225 LOC: G-4
DRAWING COORDINATES

FSAR FIGURE 9.5-43

THIS DRAWING CREATED ELECTRONICALLY

NON–SAFETY

LUMINANT
CPNPP
GLEN ROSE, TEXAS

FLOW DIAGRAM
FIRE PROTECTION SYSTEM

DWG. NO.	SH. NO.	REV.
M1-0225	-	CP-23

SSSSSSDATESSSSS

me927900.dgn

REV	DWN	CHKD	APVD	REMARKS
CP-14	DLK 07-06-2015	MHF 07-06-2015		THIS DRAWING REVISED TO INCORPORATE DESIGN CHANGE FDA-2014-000166-01-00 PER SK-0001-14-000166-01-00.

NOTES:

1. FOR GENERAL NOTES AND LEGEND SEE DRAWING M1-0225.
2. THE TURBINE BUILDING ON THIS DRAWING WAS REDRAWN FROM THE ORIGINAL FLOW DIAGRAM TURBINE BUILDING FIRE PROTECTION DRAWING M1-0225-01, REV 3.
3. DELETED
4. ALARM CHECK VALVES 1FP-0025, 1FP-0042, 1FP-0043, 1FP-0044 AND XFP-0311 ARE NOT ELECTRICALLY CONNECTED.
5. DELETED
6. VALVE NUMBERS IN PARENTHESIS ARE VALVE BODY NUMBERS PER ECE 5.04-02 AND ARE ENTERED FOR HISTORICAL INFORMATION ONLY.
7. ORIFICE DISC NUMBERS IN PARENTHESIS ARE PROVIDED FOR THE 2□" DISCS STORED IN THE TURBINE DECK HOSE HOUSES FOR THE 2□" FIRE HOSES.

REFERENCES:

M1-0225	FLOW DIAGRAM FIRE PROTECTION SYSTEM
M2-0225-01	FLOW DIAGRAM TURBINE BLDG UNIT 2 FIRE PROTECTION
M1-0225-04	FLOW DIAGRAM FUEL AND ELECTRIC CONTROL BUILDINGS-UNITS 1 AND 2 FIRE PROTECTION
M1-0225-03	FLOW DIAGRAM SAFEGUARDS AND DIESEL GENERATOR BUILDINGS UNIT 1 FIRE PROTECTION

DRAIN VALVE TABLE											
A	B	C	D	E	F	G	H	J	K	L	M
1FP-0407	1FP-0421	1FP-0410	1FP-0411	1FP-0412	1FP-0634	1FP-0401	1FP-0405	1FP-0408	1FP-0404	1FP-0644	1FP-0569
1FP-0420			1FP-0434	1FP-0406		1FP-0402	1FP-0448	1FP-0409			1FP-0570
				1FP-0675		1FP-0552		1FP-0419			1FP-0571
						1FP-0553		1FP-0422			1FP-0620
								1FP-0423			1FP-0662
								1FP-0623			

CLASS II

LUMINANT
CPNPP
GLEN ROSE, TEXAS

FLOW DIAGRAM
TURBINE BUILDING UNIT 1
FIRE PROTECTION

DWG. NO.	SH. NO.	REV.
M1-0225	01	CP-14

FSAR FIGURE 9.5-44

THIS DRAWING CREATED ELECTRONICALLY

REV	DWN	CHKD	APVD	REMARKS
CP-17	DLK 07-06-2015	MHF 07-06-2015		THIS DRAWING REVISED TO INCORPORATE DESIGN CHANGE FDA-2014-000166-01-00 PER SK-0002-14-000166-01-00.

NOTES:

1. PROVIDE VENT VALVES AT HIGH POINTS AND DRAIN VALVES AT THE LOW POINTS.
2. UNLESS OTHERWISE NOTED, ALL DRAINS ARE COLLECTED LOCALLY UNDER ADMINISTRATIVE CONTROLS.
3. FOR FIRE PROTECTION COMMON SUPPLY HEADER/UNIT 2 SYSTEM BOUNDARIES, ALSO SEE DRAWINGS M2-0225-03, M1-0225-02 AND M1-0225-06.
4. ALARM CHECK VALVES 2FP-0043 , 2FP-0044 , 2FP-0042 , 2FP-0025 AND XFP-0317 ARE NOT ELECTRICALLY CONNECTED.
5. PIPING AND COMPONENTS DEPICTED ARE WITHIN UNIT 2 BOUNDARIES AND SHALL BE WORKED IN ACCORDANCE WITH SPECIFICATION NUMBER CPES-M-2017 EXCEPT LINE NUMBERS 6-FP-X-189-160G AND 6-FP-X-134-160-5. IN ALL CASES COORDINATE WITH OPERATIONS PRIOR TO COMMENCEMENT OF WORK.

REFERENCE DRAWINGS

M1-0225	FLOW DIAGRAM FIRE PROTECTION SYSTEM
M1-0200	MECHANICAL DRAWING
M2-1990	LAYOUT DRAWINGS

DRAIN VALVE TABLE

A	B	C	D	E	F
2FP-0481	2FP-0405	2FP-0733	2FP-0403	2FP-0432	2FP-0572
	2FP-0320	2FP-0428	2FP-0569	2FP-0404	2FP-0460
	2FP-0448	2FP-0596	2FP-0459	2FP-0595	2FP-0461
		2FP-0570		2FP-0431	2FP-0479
					2FP-0554
					2FP-0484
					2FP-0571
					2FP-0555

FSAR FIGURE 9.5-44

THIS DRAWING CREATED ELECTRONICALLY

CLASS II

LUMINANT
CPNPP
GLEN ROSE, TEXAS

FLOW DIAGRAM
TURBINE BUILDING
FIRE PROTECTION

DWG. NO.	SH. NO.	REV.
M2-0225	01	CP-17

FINAL PRINT

REF CKD CP-16 06/25/15

mc955600.dgn A M2-0225-01

Figure 9.5-44 and 9.5-44A have been transferred to the Flow Diagram Volume. (See Figure 9.5-44 in Table 3.2-4 for the flow diagram for both Figures.) 94

ROOF EL 900'-3"

FIN FL EL 886'-6"

FIN FL EL 873'-6"

FIN FL EL 852'-6"

FIN FL EL 842'-0"

FIN FL EL 831'-6"

FIN FL EL 810'-6"

FIN FL EL 790'-6"

HOSE STATION CPX-FPFEXH-16

HOSE STATION CPX-FPFEXH-15

HOSE STATION CPX-FPFEXH-12

HOSE STATION CPX-FPFEXH-24

HOSE STATION CPX-FPFEXH-23

HOSE STATION CPX-FPFEXH-21

HOSE STATION CPX-FPFEXH-01

FILTRATION UNIT CPX-VAFUPK-15

FILTRATION UNIT CPX-VAFUPK-13

FILTRATION UNIT CPX-VAFUPK-11

FILTRATION UNIT CPX-VAFUPK-19

FILTRATION UNIT CPX-VAFUPK-09

FILTRATION UNIT CPX-VAFUPK-16

FILTRATION UNIT CPX-VAFUPK-14

FILTRATION UNIT CPX-VAFUPK-12

FILTRATION UNIT CPX-VAFUPK-20

FILTRATION UNIT CPX-VAFUPK-10

CP1-FPSREC-01

CP2-FPSREC-01

CPX-FPORAB-03

CPX-FPORAB-04

CPX-FPORAB-05

CPX-FPORAB-07

CPX-FPORAB-08

CPX-FPORAB-09

CPX-FPORAB-01

REV	DWN	CHK	APVD	REMARKS
CP-23	DLK 09-10 2007	MM 09-11 2007		THIS DRAWING REVISED TO INCORPORATE DESIGN CHANGE FDA 2004-000481-01-00 PER SK-0001-04-000481-01-00.

NOTES:

1. FOR GENERAL NOTES AND LEGEND SEE DRAWING M1-0225.
2. PROVIDE VENT VALVES AT THE HIGH POINTS AND DRAIN VALVES AT THE LOW POINTS.
3. THIS DRAWING WAS REDRAWN FROM THE ORIGINAL AUXILIARY BUILDING, SAFEGUARDS BUILDING, AND CONTROL BUILDING FIRE PROTECTION DRAWING M1-0225-02, REV. 2.
4. UNLESS OTHERWISE NOTED DRAINS COLLECTED BY LOCAL DRAIN SYSTEM.
5. PIPING INSTALLED WITHIN THE DASHED LINES (DESIGNATED CLASS 3) IS ASSOCIATED WITH THE FILTRATION UNITS. SEE DRAWINGS M1-0301 AND M1-0309 AND NCR-88-15777 FOR MORE INFORMATION.
6. VALVE NUMBERS IN PARENTHESIS ARE VALVE BODY NUMBER PER ECE 5.04-02 AND ARE ENTERED FOR HISTORICAL INFORMATION ONLY.

REFERENCE DRAWINGS:

1. FLOW DIAGRAM FIRE PROTECTION SYSTEM DWG M1-0225
2. FLOW DIAGRAM SAFEGUARD AND DIESEL GENERATOR BUILDING UNIT 1 FIRE PROTECTION DWG M1-0225-03
3. FLOW DIAGRAM ELEC CONTROL, SWITCHGEAR AND FUEL BUILDING UNITS 1 AND 2 FIRE PROTECTION DWG M1-0225-04
4. FLOW DIAGRAM SAFEGUARD AND DIESEL GENERATOR BUILDING UNIT 2 FIRE PROTECTION DWG M2-0225-03
5. FOR SYSTEM NUMBERS AND PIPING PLANS AND SECTIONS SEE FIRE PROTECTION ISOMETRIC DRAWINGS

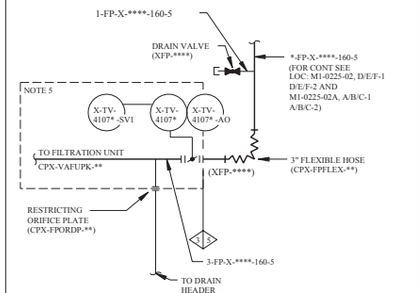

DETAIL A
SEE TABLE X FOR ITEM NUMBERS

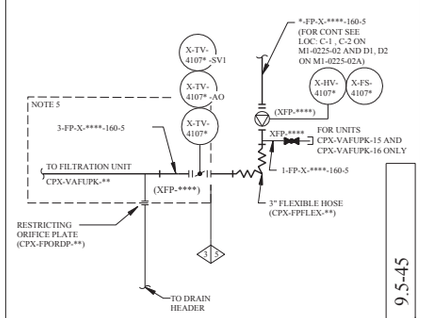

DETAIL B
SEE TABLE X AND X-1 FOR ITEM NUMBERS

TABLE X
(SEE DETAILS A, B AND C)

DELUGE VALVE				LINE NUMBER CLASS 5 REQD	LINE NUMBER CLASS 3 REQD	3" FLEXIBLE HOSE NUMBER	DRAIN LINE NUMBER	DRAIN VALVE NUMBER	FILTRATION UNIT NUMBER	RESTRICTING ORIFICE PLATE NUMBER	DETAIL
VALVE		AIR OPERATOR	SOLENOID VALVE								
X-TV-4107E	(XFP-0653)	X-TV-4107E-AO	X-TV-4107E-SV1	3-FP-X-132-160-5	3-FP-X-4224-160-5	CPX-FPFLEX-01	-	-	CPX-VAFUPK-01	CPX-FPORDP-01	B
X-TV-41071	(XFP-0652)	X-TV-41071-AO	X-TV-41071-SV1	3-FP-X-131-160-5	3-FP-X-4226-160-5	CPX-FPFLEX-03	1-FP-X-2232-160-5	XFP-0552	CPX-VAFUPK-03	CPX-FPORDP-03	A
X-TV-4107J	(XFP-0651)	X-TV-4107J-AO	X-TV-4107J-SV1	3-FP-X-130-160-5	3-FP-X-4228-160-5	CPX-FPFLEX-05	1-FP-X-2233-160-5	XFP-0555	CPX-VAFUPK-05	CPX-FPORDP-05	A
X-TV-4107K	(XFP-0650)	X-TV-4107K-AO	X-TV-4107K-SV1	3-FP-X-129-160-5	3-FP-X-4230-160-5	CPX-FPFLEX-07	1-FP-X-2234-160-5	XFP-0566	CPX-VAFUPK-07	CPX-FPORDP-07	A
X-TV-4107L	(XFP-0649)	X-TV-4107L-AO	X-TV-4107L-SV1	3-FP-X-128-160-5	3-FP-X-4232-160-5	CPX-FPFLEX-09	1-FP-X-2241-160-5	XFP-0547	CPX-VAFUPK-09	CPX-FPORDP-09	A
X-TV-4107M	(XFP-0647)	X-TV-4107M-AO	X-TV-4107M-SV1	3-FP-X-126-160-5	3-FP-X-4234-160-5	CPX-FPFLEX-11	1-FP-X-2239-160-5	XFP-0681	CPX-VAFUPK-11	CPX-FPORDP-11	A
X-TV-4107N	(XFP-0646)	X-TV-4107N-AO	X-TV-4107N-SV1	3-FP-X-125-160-5	3-FP-X-4236-160-5	CPX-FPFLEX-13	1-FP-X-2238-160-5	XFP-0683	CPX-VAFUPK-13	CPX-FPORDP-13	A
X-TV-4107O	(XFP-0645)	X-TV-4107O-AO	X-TV-4107O-SV1	3-FP-X-124-160-5	3-FP-X-4238-160-5	CPX-FPFLEX-15	1-FP-X-2237-160-5	XFP-0680	CPX-VAFUPK-15	CPX-FPORDP-15	B
X-TV-4107F	(XFP-0644)	X-TV-4107F-AO	X-TV-4107F-SV1	3-FP-X-123-160-5	3-FP-X-4225-160-5	CPX-FPFLEX-02	-	-	CPX-VAFUPK-02	CPX-FPORDP-02	B
X-TV-4107Q	(XFP-0643)	X-TV-4107Q-AO	X-TV-4107Q-SV1	3-FP-X-122-160-5	3-FP-X-4227-160-5	CPX-FPFLEX-04	1-FP-X-2219-160-5	XFP-0554	CPX-VAFUPK-04	CPX-FPORDP-04	A
X-TV-4107R	(XFP-0642)	X-TV-4107R-AO	X-TV-4107R-SV1	3-FP-X-121-160-5	3-FP-X-4229-160-5	CPX-FPFLEX-06	1-FP-X-2220-160-5	XFP-0561	CPX-VAFUPK-06	CPX-FPORDP-06	A
X-TV-4107S	(XFP-0641)	X-TV-4107S-AO	X-TV-4107S-SV1	3-FP-X-120-160-5	3-FP-X-4231-160-5	CPX-FPFLEX-08	1-FP-X-2221-160-5	XFP-0582	CPX-VAFUPK-08	CPX-FPORDP-08	A
X-TV-4107T	(XFP-0640)	X-TV-4107T-AO	X-TV-4107T-SV1	3-FP-X-119-160-5	3-FP-X-4233-160-5	CPX-FPFLEX-10	1-FP-X-2228-160-5	XFP-0548	CPX-VAFUPK-10	CPX-FPORDP-10	A
X-TV-4107U	(XFP-0638)	X-TV-4107U-AO	X-TV-4107U-SV1	3-FP-X-117-160-5	3-FP-X-4235-160-5	CPX-FPFLEX-12	1-FP-X-2227-160-5	XFP-0682	CPX-VAFUPK-12	CPX-FPORDP-12	A
X-TV-4107V	(XFP-0637)	X-TV-4107V-AO	X-TV-4107V-SV1	3-FP-X-116-160-5	3-FP-X-4237-160-5	CPX-FPFLEX-14	1-FP-X-2226-160-5	XFP-0684	CPX-VAFUPK-14	CPX-FPORDP-14	A
X-TV-4107W	(XFP-0636)	X-TV-4107W-AO	X-TV-4107W-SV1	3-FP-X-115-160-5	3-FP-X-4239-160-5	CPX-FPFLEX-16	1-FP-X-2225-160-5	XFP-0685	CPX-VAFUPK-16	CPX-FPORDP-16	B
X-TV-4107G	(XFP-0648)	X-TV-4107G-AO	X-TV-4107G-SV1	2-FP-X-127-160-5	2-FP-X-2073-160-5	CPX-FPFLEX-19	1-FP-X-4220-160-5	XFP-0999	CPX-VAFUPK-19	CPX-FPORDP-19	C
X-TV-4107H	(XFP-0639)	X-TV-4107H-AO	X-TV-4107H-SV1	2-FP-X-118-160-5	2-FP-X-2074-160-5	CPX-FPFLEX-20	1-FP-X-4221-160-5	XFP-1000	CPX-VAFUPK-20	CPX-FPORDP-20	C

DRAWING 2323-M1-0225-02 REV CP-5
HAS BEEN SPLIT INTO THE FOLLOWING SHEETS:
M1-0225-02
M1-0225-02A

CLASS I
(NUCLEAR SAFETY-RELATED)
SAFETY CLASS 1 SEISMIC CATEGORY I
SAFETY CLASS 2 CLASS 1E
SAFETY CLASS 3 ASSOCIATED CIRCUITS

LUMINANT
CPSES
GLEN ROSE, TEXAS

FLOW DIAGRAM
AUXILIARY BUILDING
FIRE PROTECTION

DWG NO.	SH. NO.	REV.
M1-0225	02	CP-23

FSAR FIGURE 9.5-45

THIS DRAWING CREATED ELECTRONICALLY

ROOF EL 900'-3"

CONTINUED ON M1-0225-02 LOC: G-1

4-FP-X-114-160-5

LO XFP-0521

LO * XFP-0522 — 3-FP-X-129-160-5 — FILTRATION UNIT CPX-VAFUPK-07 — SEE DETAIL A

LO * XFP-0523 — 3-FP-X-130-160-5 — FILTRATION UNIT CPX-VAFUPK-05 — SEE DETAIL A

LO * XFP-0524 — 3-FP-X-131-160-5 — FILTRATION UNIT CPX-VAFUPK-03 — SEE DETAIL A

X-ZS-4107E — MS — * XFP-0525 — 3-FP-X-132-160-5 — FILTRATION UNIT CPX-VAFUPK-01 — SEE DETAIL B

4-FP-X-114-160-5 — XFP-0589 — CPX-FPSRAB-02 — 2 1/2 -FP-X-2231-160-5 — D XFP-0526 — LO XFP-0527 — 1-FP-X-2230-160-5 — XFP-0697 — 1-FP-X-2229-160-5

4-FP-X-114-160-5 — 6-FP-X-094-160-5 — 2-FP-X-109-160-5 — 1 1/2 -FP-X-2021-160-5 — XFP-0144 — CPX-FPORXH-17 — 2-FP-X-3876-160-5 — HOSE STATION CPX-FPFEXH-17

FIN FL EL 886'-6"

CONTINUED ON M1-0225-02 LOC: G-1

4-FP-X-113-160-5

LO XFP-0507

LO * XFP-0508 — 3-FP-X-120-160-5 — FILTRATION UNIT CPX-VAFUPK-08 — SEE DETAIL A

LO * XFP-0509 — 3-FP-X-121-160-5 — FILTRATION UNIT CPX-VAFUPK-06 — SEE DETAIL A

LO * XFP-0510 — 3-FP-X-122-160-5 — FILTRATION UNIT CPX-VAFUPK-04 — SEE DETAIL A

R — X-ZS-4107E — MS — * XFP-0511 — 3-FP-X-123-160-5 — FILTRATION UNIT CPX-VAFUPK-02 — SEE DETAIL B

4-FP-X-113-160-5 — XFP-0587 — CPX-FPSRAB-04 — 2 1/2 -FP-X-2218-160-5 — D XFP-0512 — LO XFP-0513

4-FP-X-113-160-5 — 6-FP-X-186-160-5 — 2-FP-X-107-160-5 — XFP-0143 — CPX-FPORXH-14 — 1 1/2 -FP-X-2018-160-5 — HOSE STATION CPX-FPFEXH-14

6-FP-X-094-160-5 — 2-FP-X-108-160-5 — 1 1/2 -FP-X-2017-160-5 — XFP-0142 — CPX-FPORXH-13 — HOSE STATION CPX-FPFEXH-13

FIN FL EL 873'-6"

CONTINUED ON M1-0225-02 LOC: G-2

6-FP-X-735-160-5

3-FP-X-4617-160-5 — 1-ZS-4113S — 1-FS-4113S — 1-HV-4113S — MS — XFP-0528 — (XFP-0553) — SYS 785-X241 STAIR AREA A-17 M1-1990-104 LOC: B-2 — DRAIN VALVES XFP-0727

4-FP-X-698-160-5 — XFP-0550 — D — 4-FP-X-698-160-5 — 1-FP-X-2168-160-5

CONTINUED ON M1-0225-03 LOC: A-2

4-FP-X-2523-160-5 — X-ZS-4104N — X-FS-4104N — X-HV-4104N — MS — XFP-0466 — (XFP-0467) — 4-FP-X-2523-160-5 — SYS 785-X301 SOUTH HALF CORRIDOR M1-1990-184 LOC: F-3

1-FP-X-2524-160-5 — XFP-0468 — D — 2-FP-X-106-160-5 — 2-FP-X-2323-160-5 — XFP-0137 — CPX-FPORXH-10 — 2" — 1 1/2 -FP-X-2211-160-5 — HOSE STATION CPX-FPFEXH-10

XFP-0461 — 1-FP-X-2488-160-5 — CPX-FPORAB-10 — 1 1/2 " HOSE CONNECTION

4-FP-1-3610-160-5 — 1-ZS-4113P — 1-FS-4113P — 1-HV-4113F — MS — 1FP-0481 — (1FP-0480) — 4-FP-1-3547-160-5 — CONTINUED ON M1-0225-03 LOC: A-2

1-FP-1-3570-160-5 — 1FP-0482 — D — 2-FP-X-102-160-5 — 1 1/2 -FP-X-2016-160-5 — XFP-0139 — CPX-FPFEXH-11 — HOSE STATION CPX-FPFEXH-11

2-FP-X-1277-160-5 — CONTINUED ON M1-0225-04A LOC: G-1

XFP-0724 — 3-FP-X-1276-160-5 — 6-FP-X-094-160-5 — 1 1/2 -FP-X-2014-160-5 — D XFP-0729 — LO XFP-0690

2 1/2 -FP-X-702-160-5 — CONTINUED ON M1-0225-04A LOC: G-1

FIN FL EL 852'-6"

SYSTEM 785-X241 STAIR AREA A-11 DWG#-105 — DRAIN VALVES XFP-0549

2-FP-X-1278-160-5 — 2-FP-X-106-160-5

2-FP-X-1272-160-5 — 1 1/2 -FP-X-1810-160-5 — XFP-0480 — CPX-FPORXH-22 — HOSE STATION CPX-FPFEXH-22

FIN FL EL 842'-0"

2-FP-X-1270-160-5 — 1 1/2 -FP-X-100-160-5 — XFP-0141 — CPX-FPORXH-08 — HOSE STATION CPX-FPFEXH-08

XFP-0478 — 1 1/2 -FP-X-1807-160-5 — 2-FP-X-1270-160-5 — CPX-FPORXH-20 — HOSE STATION CPX-FPFEXH-20

2 1/2 -FP-X-4059-160-5 — 1 1/2 -FP-X-4086-160-5

6-FP-X-735-160-5 — CONTINUED ON M1-0225-03 LOC: A-2

2-FP-X-105-160-5 — 1 1/2 -FP-X-2169-160-5 — XFP-0135 — CPX-FPORXH-09 — 2-FP-X-105-160-5 — HOSE STATION CPX-FPFEXH-09

X-FS-4104H — X-HV-4104H — X-ZS-4104H — MS — (XFP-0612) — XFP-0613 — SYS 785-X161 SOUTH HALF CORR M1-1990-103A LOC: F-4 — 1-FP-X-3396-160-5 — DRAIN VALVES XFP-0776 — CPX-FP0RAB-06 — XFP-0768 — 1 1/2 " HOSE CONNECTION

6-FP-X-1175-160-5 — 1-FP-X-1178-160-5 — XFP-0614 — D

FIN FL EL 831'-6"

4-FP-X-092-160-5 — 4-FP-X-093-160-5

CONTINUED ON M1-0225-02 LOC: G-4

8-FP-X-734-160-5

LO XFP-0691

8-FP-X-734-160-5 — CONTINUED ON M1-0225-03 LOC: A-4

2-FP-X-104-160-5 — 2-FP-X-4087-160-5 — 2-FP-X-104-160-5 — XFP-0136 — CPX-FPORXH-07 — HOSE STATION CPX-FPFEXH-07

2-FP-X-187-160-5 — 2-FP-X-2263-160-5 — 1 1/2 -FP-X-2005-160-5 — 1-FP-X-2003-160-5 — XFP-0134 — CPX-FPORXH-06 — HOSE STATION CPX-FPFEXH-06

1-FP-X-2099-160-5 — XFP-0692 — D — XFP-0151 LO

CONTINUED ON M1-0225-01 LOC: G-2 — 2-FP-1-105-160-5

2-FP-X-101-160-5 — 2-FP-X-101-160-5 — XFP-0138 — CPX-FPORXH-05

2-FP-X-099-160-5 — 1 1/2 -FP-X-2212-160-5 — 1 1/2 -FP-X-2013-160-5 — XFP-0140 — HOSE STATION CPX-FPFEXH-05

1-FP-X-2261-160-5 — D XFP-0700 — CPX-FPORXH-04 — LO XFP-0149 — HOSE STATION CPX-FPFEXH-04

6-FP-X-094-160-5 — 6-FP-1-4562-160-5 — CONTINUED ON M1-0225-04A LOC: E-4

6-FP-1-848-160-5 — SYSTEM 785-X121 SOUTH HALF CORR M1-1990-101A LOC:B-1

DRAIN VALVES XFP-0750 XFP-0596

6-FP-X-365-160-5 — X-ZS-4104F — X-FS-4104F — X-HV-4104F — MS — XFP-0578 — (XFP-0579)

X-FS-4107D — X-HV-4107D — (XFP-0531) — X-ZS-4107D — MS — XFP-0145

XFP-0575 — 1-FP-X-3500-160-5 — 1 1/2 " HOSE CONNECTION — CPX-FPORAB-02

4-FP-X-092-160-5 — 6-FP-X-094-160-5

FIN FL EL 810'-6"

CONTINUED ON M1-0225-02 LOC: G-5

6-FP-X-091-160-5

LO XFP-0190 — LO XFP-0187 — V XFP-0720 — 1-FP-X-2155-160-5

3/4 -FP-X-2156-160-5 — 1-FP-X-4222-160-5 — XFP-0113 — 1-FP-X-2159-160-5 — XFP-0280 — V XFP-0239 — 1-FP-X-1023-160-5

6-FP-X-090-160-5 — 2-FP-X-098-160-5 — 1 1/2 -FP-X-2158-160-5 — XFP-0133 — 2-FP-X-098-160-5 — CPX-FPORXH-03 — HOSE STATION CPX-FPFEXH-03

1-FP-X-2157-160-5 — 6-FP-X-3254-160-5 — SYSTEM 785-X061 SOUTH HALF CORRIDOR M1-1990-146A LOC: F-2 — DRAIN VALVES XFP-0766 — XFP-0717 — D — 6-FP-X-0592-160-5

CONTINUED ON M1-0225-04A LOC: G-6 — 6-FP-X-1553-160-5

X-FS-4104D — X-HV-4104D — X-ZS-4104D — MS — (XFP-0590) — XFP-0577 — 6-FP-X-592-160-5

LO XFP-0248 — 3/4 -FP-X-2002-160-5 — 1-FP-X-1998-160-5 — 1FP-0599 — 6-FP-X-091-160-5 — CONTINUED ON M1-0225-03 LOC: A-5

2-FP-X-1268-160-5 — XFP-0477 — CPX-FPORXH-19 — HOSE STATION CPX-FPFEXH-19 — 1 1/2 -FP-X-2012-160-5

CONTINUED ON M1-0225-02 LOC: G-6 — 6-FP-X-089-160-5 — LO XFP-0183 — 1-FP-X-2144-160-5 — XFP-0476 — 1 1/2 -FP-X-2011-160-5 — 2-FP-X-4090-160-5 — CPX-FPORXH-18 — HOSE STATION CPX-FPFEXH-18

1-FP-X-4070-160-5 — XFP-0254 — D — 2-FP-X-1257-160-5 — XFP-0261 — D

6-FP-X-090-160-5 — CONTINUED ON M1-0225-04 LOC: A-4

CONTINUED ON M1-0225-04A LOC: G-6 — 6-FP-X-133-160-5 — 6-FP-1-201-160-5 — 3/4 -FP-X-1996-160-5 — 3-FP-X-096-160-5 — 1 1/2 -FP-X-1999-160-5 — XFP-0131 — CPX-FPORXH-02 — HOSE STATION CPX-FPFEXH-02 — 1-FP-X-2000-160-5 — XFP-0713

LO XFP-0182 — 2-FP-X-1993-160-5 — 3/4 -FP-X-1994-160-5 — 1-FP-X-2001-160-5 — 6-FP-1-201-160-5 — 1FP-0116 — D

CONTINUED ON M1-0225-03 LOC: A-5

FIN FL EL 790'-6"

TABLE X-1

FILTRATION UNIT NUMBER	LINE NUMBER	ALARM CHECK VALVE		
		VALVE		FLOW SWITCH
CPX-VAFUPK-01	3-FP-X-132-160-5	XFP-0630	X-HV-4107E	X-FS-4107E
CPX-VAFUPK-02	3-FP-X-123-160-5	XFP-0551	X-HV-4107F	X-FS-4107F
CPX-VAFUPK-15	3-FP-X-124-160-5	XFP-0997	X-HV-4107O	
CPX-VAFUPK-16	3-FP-X-115-160-5	XFP-0998	X-HV-4107W	X-FS-4107W

1-FP-X-****-160-5 — DRAIN VALVE (XFP-****) — *-FP-X-****-160-5 (FOR CONT SEE DRAWING M1-0225-02 LOC: E-1, E-2)

(NOTE 2) — X-TV-4107* -SV1 — X-TV-4107* — X-TV-4107* -AO

TO FILTRATION UNIT CPX-VAFUPK-** — (XFP-****) — 3" FLEXIBLE HOSE (CPX-FPFLEX-**)

RESTRICTING ORIFICE PLATE (CPX-FPORDP-**) — 2-FP-X-****-160-5 — TO DRAIN HEADER

DETAIL C
SEE TABLE X FOR ITEM NUMBERS
(DRAWING M1-0225-02 LOC: E-6)

REV	DWN	CHK	APVD	REMARKS
CP-15	JRAC 01-04-2011	SM 01-04-2011		THIS DRAWING REVISED TO INCORPORATE DESIGN CHANGE FDA-2010-000196-01-00 PER SK-0029-10-000196-01-00.

NOTES:

1. FOR GENERAL NOTES AND REFERENCE DRAWINGS SEE DRAWING M1-0225-02.
2. FOR SYSTEM NUMBERS AND PIPING PLANS AND SECTIONS SEE FIRE PROTECTION ISOMETRIC DRAWINGS.

DRAWING 2323-M1-0225-02 REV CP-5
HAS BEEN SPLIT INTO THE FOLLOWING SHEETS:

2323-M1-0225-02
ECE-M1-0225-02A

CLASS I
(NUCLEAR SAFETY-RELATED)
SAFETY CLASS 1 — SEISMIC CATEGORY I
SAFETY CLASS 2 — CLASS 1E
SAFETY CLASS 3 — ASSOCIATED CIRCUITS

LUMINANT
CPNPP
GLEN ROSE, TEXAS

FLOW DIAGRAM
AUXILIARY BUILDING
FIRE PROTECTION

DWG. NO. M1-0225 | SH. NO. 02A | REV. CP-15

FSAR FIGURE 9.5-45

THIS DRAWING CREATED ELECTRONICALLY

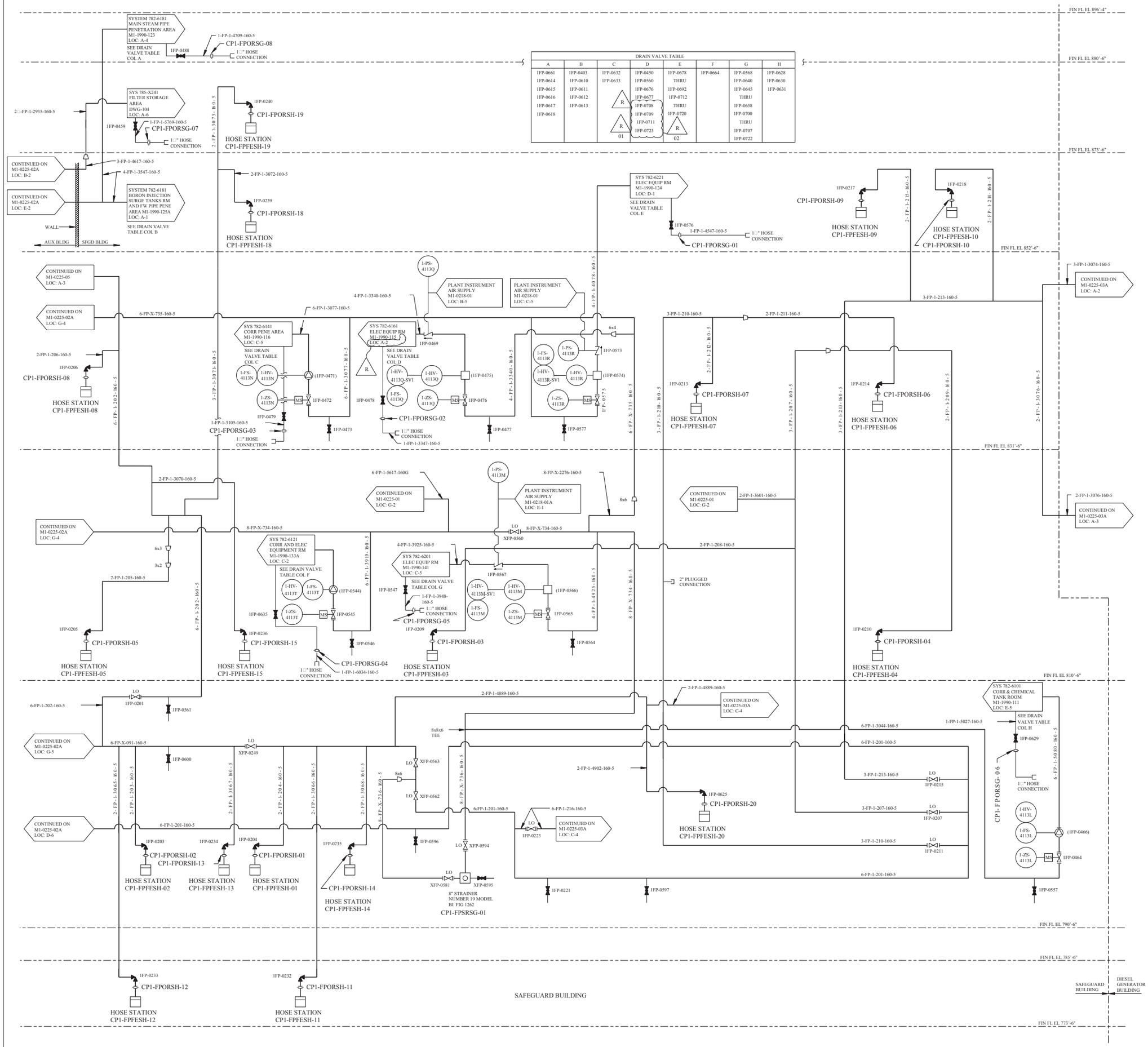

REV	DWN	CHK	APVD	REMARKS
CP-18	MM 01-26-2011	GAW 01-26-2011		THIS DRAWING REVISED TO INCORPORATE DESIGN CHANGE FDA 2008-000324-02-02 PER SK-0004-08-000324-02-02.

NOTES:

1. THE SAFEGUARD BUILDING ON THIS DRAWING WAS REDRAWN FROM THE ORIGINAL AUXILIARY BUILDING, SAFEGUARD BUILDING, ELECTRICAL AND CONTROL BUILDING DRAWING M1-0225-02 REV 2 AND THE DIESEL GENERATOR BUILDING ON THIS DRAWING WAS REDRAWN FROM THE ORIGINAL FUEL HANDLING, DIESEL GENERATOR BUILDING AND SERVICE WATER INTAKE STRUCTURE DRAWING M1-0225-03 REV 4.
2. PROVIDE VENT VALVES AT THE HIGH POINTS AND DRAIN VALVES AT LOW POINTS.
3. DELETED
4. VALVE NUMBERS IN PARENTHESIS ARE VALVE BODY NUMBERS PER ECE 5.04-02 AND ARE ENTERED FOR HISTORICAL INFORMATION ONLY.

REFERENCE DRAWINGS:

1. FLOW DIAGRAM FIRE PROTECTION SYSTEM DRAWING M1-0225.
2. FLOW DIAGRAM AUXILIARY BUILDING FIRE PROTECTION DRAWING M1-0225-02.
3. FLOW DIAGRAM FUEL AND ELECTRIC CONTROL BUILDINGS UNIT 1 AND 2 FIRE PROTECTION DRAWING M1-0225-04.
4. FLOW DIAGRAM CONTAINMENT BUILDING UNIT 1 FIRE PROTECTION DRAWING M1-0225-05.
5. FOR SYSTEM NUMBERS AND PIPING PLANS AND SECTIONS SEE GRINNELL FIRE PROTECTION SYSTEM DRAWINGS.
6. FLOW DIAGRAM PLANT GAS SUPPLY SYSTEM NITROGEN SUPPLY, DRAWING M1-0243.

DRAWING M1-0225-03 REV CP-2
HAS BEEN SPLIT INTO THE FOLLOWING SHEETS:
M1-0225-03
M1-0225-03A

FSAR FIGURE 9.5-46

THIS DRAWING CREATED ELECTRONICALLY

CLASS II

LUMINANT
CPNPP
GLEN ROSE, TEXAS

FLOW DIAGRAM
SAFEGUARD BUILDING
UNIT 1
FIRE PROTECTION

DWG. NO. M1-0225 | SH. NO. 03 | REV. CP-18

me101470.dgn M1-0225-03 < FINAL PRINT >

SSSSSSSSDATESSSSSS

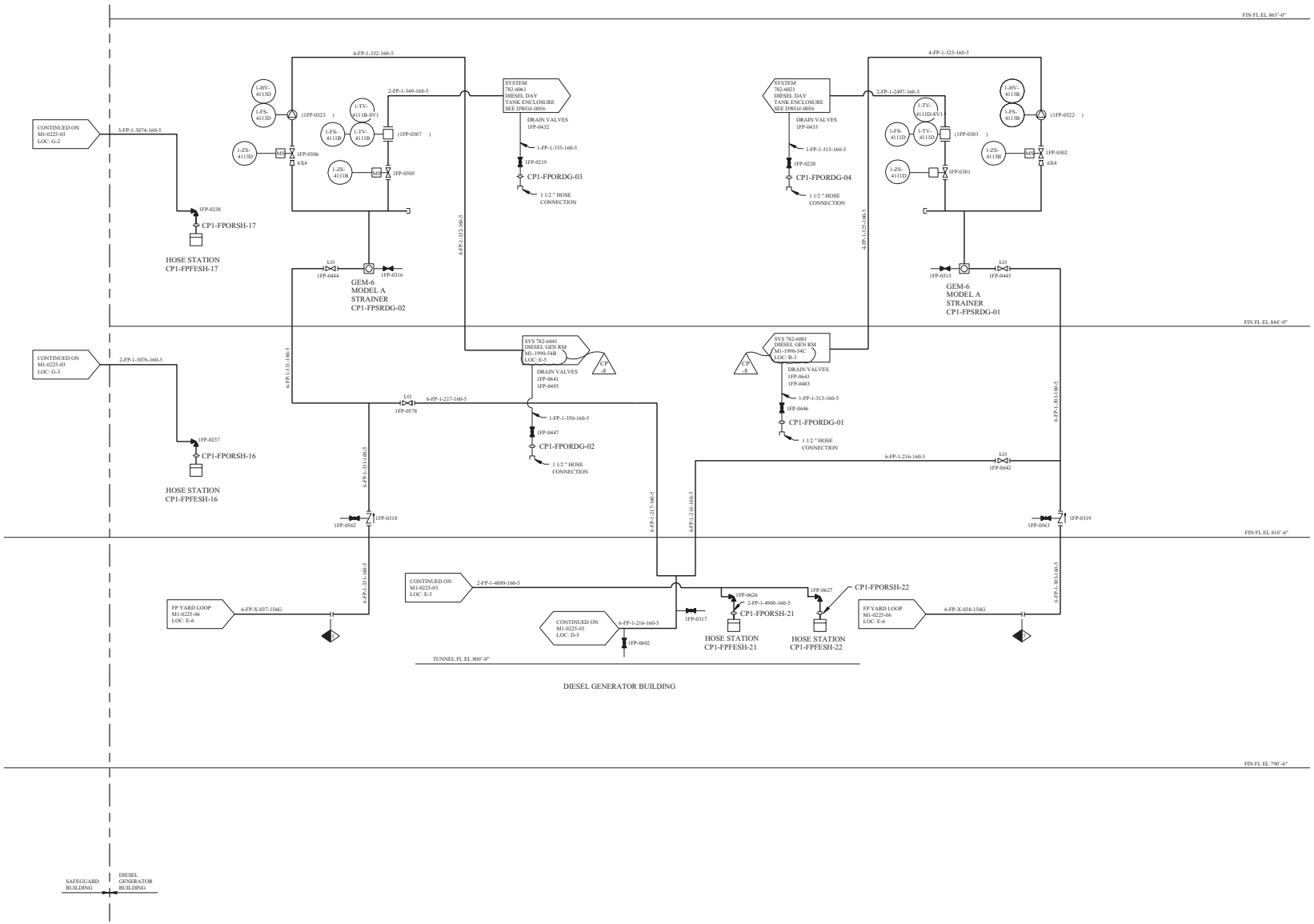

REV	DWN	CHKD	APVD	REMARKS
CP-6	RCH 11/05/1999			THIS DRAWING REVISED TO INCORPORATE EDITORIAL CHANGES AS NOTED.

NOTES:

1. THE SAFEGUARD BUILDING ON THIS DRAWING WAS REDRAWN FROM THE ORIGINAL AUXILIARY BUILDING, SAFEGUARD BUILDING, ELECTRICAL AND CONTROL BUILDING DRAWING MI-0225-02 REV. 2 AND THE DIESEL GENERATOR BUILDING ON THIS DRAWING WAS REDRAWN FROM THE ORIGINAL FUEL HANDLING, DIESEL GENERATOR BUILDING AND SERVICE WATER INTAKE STRUCTURE DRAWING MI-0225-03 REV. 4.
2. PROVIDE VENT VALVES AT THE HIGH POINTS AND DRAIN VALVES AT LOW POINTS.
3. DELETED
4. VALVE NUMBERS IN PARENTHESIS ARE VALVE BODY NUMBERS PER ECE 5.04-02 AND ARE ENTERED FOR HISTORICAL INFORMATION ONLY.

REFERENCE DRAWINGS:

1. FLOW DIAGRAM FIRE PROTECTION SYSTEM DRAWING M1-0225.
2. FLOW DIAGRAM AUXILIARY BUILDING FIRE PROTECTION DRAWING M1-0225-02.
3. FLOW DIAGRAM FUEL AND ELECTRIC CONTROL BUILDINGS UNIT 1 AND 2 FIRE PROTECTION DRAWING M1-0225-04.
4. FLOW DIAGRAM CONTAINMENT BUILDING UNIT 1 FIRE PROTECTION DRAWING M1-0225-05.
5. FOR SYSTEM NUMBERS AND PIPING PLANS AND SECTIONS SEE GRINNELL FIRE PROTECTION SYSTEM DRAWINGS.
6. FLOW DIAGRAM PLANT GAS SUPPLY SYSTEM NITROGEN SUPPLY, DRAWING M1-0243.

FSAR FIGURE 9.5-46

THIS DRAWING CREATED ELECTRONICALLY

DRAWING M1-0225-03 REV CP-3
HAS BEEN SPLIT INTO THE FOLLOWING SHEETS:
M1-0225-03
M1-0225-03A

CLASS II

TXU ELECTRIC
CPSES
GLEN ROSE, TEXAS

FLOW DIAGRAM
SAFEGUARD AND DIESEL GENERATOR BUILDINGS
UNIT 1
FIRE PROTECTION

DWG. NO.	SH. NO.	REV.
M1-0225	03A	CP-8

me0001wc.dgn

$$$$$$$D\TESSSSS

REV	DWN	CHK	APVD	REMARKS
CP-12	JSMC 03-18-2009	DJL 03-18-2009		THIS DRAWING REVISED TO INCORPORATE DESIGN CHANGE FDA-2009-000669-01-00 PER SK-0001-09-000669-01-00.

NOTES:

1. PROVIDE VENT VALVES AT THE HIGH POINTS AND DRAIN VALVES AT LOW POINTS.
2. UNLESS OTHERWISE NOTED ALL DRAINS ARE COLLECTED LOCALLY UNDER ADMINISTRATIVE CONTROL.
3. FOR FIRE PROTECTION COMMON SUPPLY HEADER/UNIT 2 SYSTEM BOUNDARIES, ALSO SEE DRAWINGS M2-0225-01, M1-0225-02, M1-0225-04A AND M1-0225-06.
4. PIPING AND COMPONENTS WITHIN UNIT 2 BOUNDARIES TO BE WORKED IN ACCORDANCE WITH SPECIFICATION NUMBER CPES-M-2017 EXCEPT SUPPLY PIPING AND IN LINE ISOLATION VALVES. IN ALL CASES COORDINATE WITH OPERATIONS PRIOR TO COMMENCEMENT OF WORK.

REFERENCE DRAWINGS:

M1-0225	FLOW DIAGRAM FIRE PROTECTION SYSTEM DRAWING
M1-0200	MECHANICAL DRAWING
M2-1990	LAYOUT DRAWINGS

DRAIN VALVE TABLE

A	B	C	C (CONT)	D
2FP-0490	2FP-0439	2FP-0517	2FP-0531	2FP-0615
2FP-0651	2FP-0541	2FP-0518	2FP-0532	2FP-0614
2FP-0437	2FP-0580	2FP-0519	2FP-0533	2FP-0617
2FP-0650	2FP-0581	2FP-0520	2FP-0534	2FP-0616
2FP-0510	2FP-0727	2FP-0521	2FP-0535	2FP-0618
2FP-0508	2FP-0728	2FP-0522	2FP-0536	2FP-0619
2FP-0509	2FP-0729	2FP-0523	2FP-0537	
2FP-0507		2FP-0524	2FP-0538	
2FP-0512		2FP-0525	2FP-0539	
2FP-0492		2FP-0526	2FP-0469	
2FP-0653		2FP-0527	2FP-0623	
2FP-0511		2FP-0528	2FP-0647	
2FP-0739		2FP-0529	2FP-0654	
2FP-0740		2FP-0530	2FP-0730	
2FP-0741		2FP-0742	2FP-0731	
2FP-0656		2FP-0743	2FP-0732	
2FP-0657				
2FP-0658				
2FP-0659				

R

DRAIN VALVE TABLE (CONT)

E	F	G	H	I
2FP-0643	2FP-0652	2FP-0477	2FP-0559	XFP-0775
2FP-0605	2FP-0649	2FP-0560	2FP-0549	XFP-0632
2FP-0646	2FP-0642	2FP-0597	2FP-0558	XFP-0633
2FP-0599	2FP-0636	2FP-0548		XFP-0698
2FP-0606				

DRAWING ECE-M2-0225-03 REV CP-1
HAS BEEN SPLIT INTO THE FOLLOWING SHEETS:
M2-0225-03
M2-0225-03A

THIS DRAWING CREATED ELECTRONICALLY

FSAR FIGURE 9.5-46

CLASS II

LUMINANT
CPNPP
GLEN ROSE, TEXAS

FLOW DIAGRAM
SAFEGUARD BUILDING
UNIT 2
FIRE PROTECTION

DWG. NO.	SH. NO.	REV.
M2-0225	03	CP-12

SSSSSSSDATESSSSS

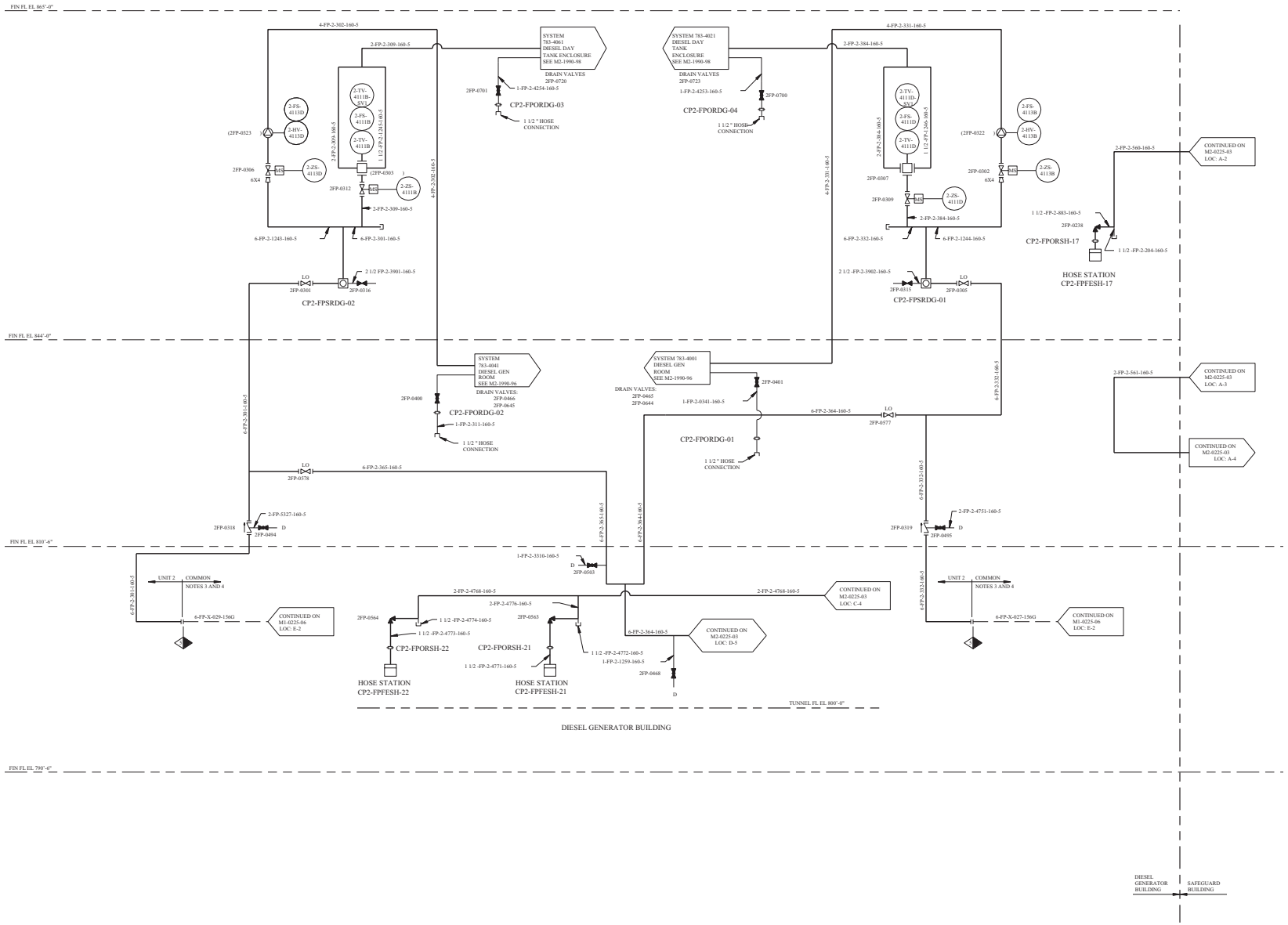

REV.	DWN.	CHKD.	APVD.	REMARKS
CP-5	AUTO 05/23/1996			THIS DRAWING REVISED TO ADD THE FSAR FIGURE NUMBER AS AN EDITORIAL CHANGE.

NOTES:

1. PROVIDE VENT VALVES AT THE HIGH POINTS AND DRAIN VALVES AT LOW POINTS.
2. UNLESS OTHERWISE NOTED ALL DRAINS ARE COLLECTED LOCALLY UNDER ADMINISTRATIVE CONTROL.
3. FOR FIRE PROTECTION COMMOM SUPPLY HEADER/UNIT 2 SYSTEM BOUNDARIES, SEE DRAWINGS M2-0225-01, M2-0225-03, M1-0225-02, M1-0225-04A AND M1-0225-06.
4. PIPING AND COMPONENTS WITHIN UNIT 2 BOUNDRIES TO BE WORKED IN ACCORDANCE WITH SPECIFICATION NUMBER CPES-M-2017 EXCEPT SUPPLY PIPING AND IN LINE ISOLATION VALVES. IN ALL CASES COORDINATE WITH OPERATIONS PRIOR TO COMMENCEMENT OF WORK.

REFERENCE DRAWINGS:

M1-0225	FLOW DIAGRAM FIRE PROTECTION SYSTEM DRAWING
M1-0200	MECHANICAL DRAWING
M2-1990	LAYOUT DRAWINGS

FSAR FIGURE 9.5-46

CP-5

THIS DRAWING CREATED ELECTRONICALLY

DRAWING ECE-M2-0225-03 REV CP-1
HAS BEEN SPLIT INTO THE FOLLOWING SHEETS:
M2-0225-03
M2-0225-03A

CLASS II

TXU ELECTRIC
CPSES
GLEN ROSE, TEXAS

FLOW DIAGRAM
DIESEL GENERATOR BUILDING
UNIT 2
FIRE PROTECTION

DWG. NO.	SH. NO.	REV.
M2-0225	03A	CP-5

$$$$$$$$D\A\TE$$$$$$$$

vs000094.dgn

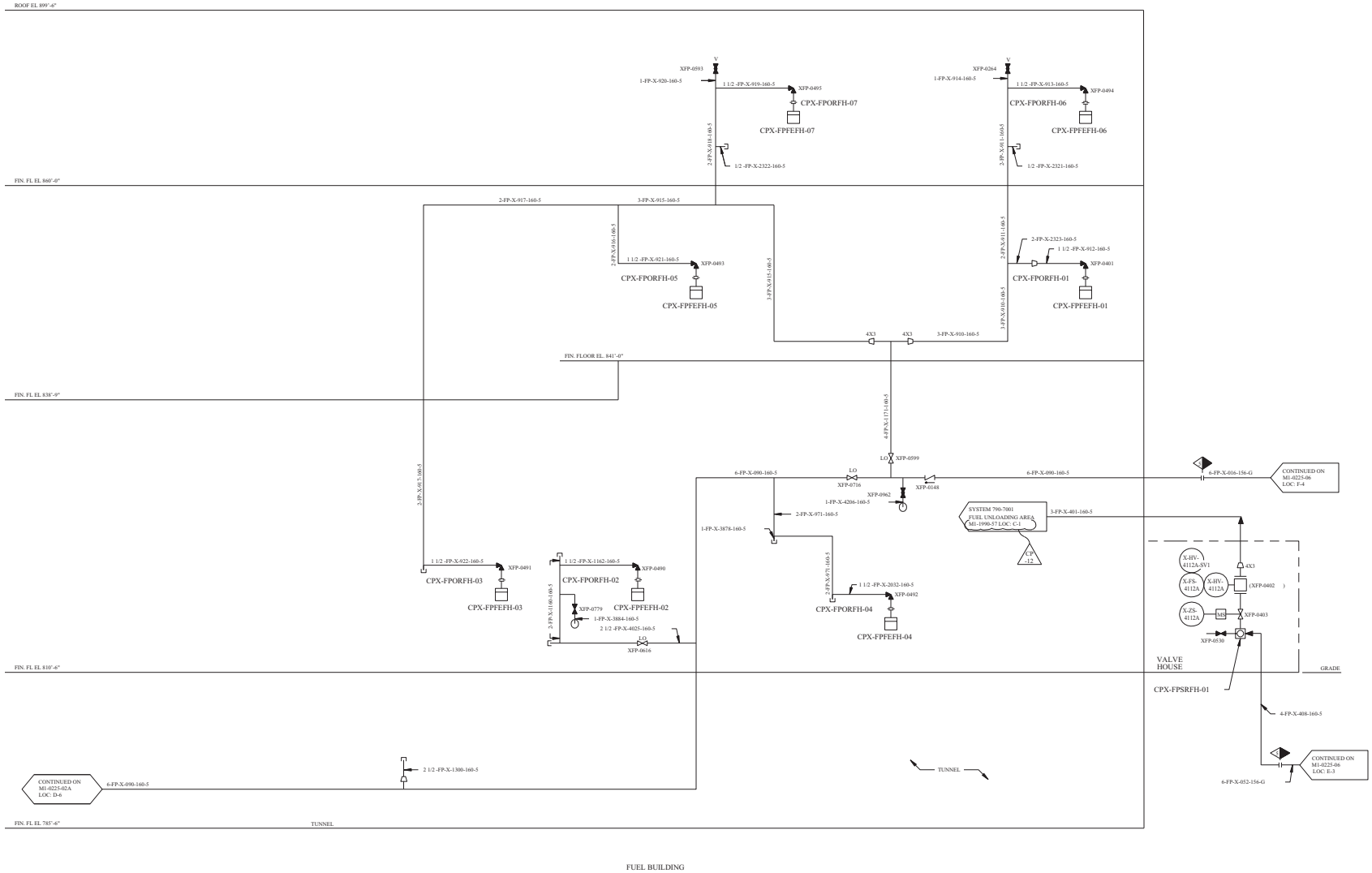

REV	DWN	CHKD	APVD	REMARKS
CP-12	RLW 11-03 1999			THIS DRAWING REVISED TO INCORPORATE EDITORIAL CHANGES AS NOTED.

NOTES

1. FOR GENERAL NOTES AND LEGEND SEE DRAWING M1-0225.
2. THE FUEL BUILDING ON THIS DRAWING WAS REDRAWN FROM THE ORIGINAL ELECTRICAL CONTROL, SWITCHGEAR AND FUEL BUILDINGS - UNITS 1 AND 2 FIRE PROTECTION, DRAWING M1-0225-04 REV CP-5. THE SWITCHGEAR BUILDING WHICH WAS DEPICTED ON EARLIER REVISIONS OF THIS DRAWING HAS BEEN RELOCATED TO THE TURBINE BUILDING UNIT 1 FIRE PROTECTION, DRAWING M1-0225-01 REV CP-4.

REFERENCES

1. M1-0225 FLOW DIAGRAM FIRE PROTECTION SYSTEM
2. M1-0225-01 FLOW DIAGRAM TURBINE BUILDING UNIT 1 FIRE PROTECTION
3. M1-0225-02 FLOW DIAGRAM AUXILIARY BUILDING FIRE PROTECTION
4. M1-0225-03 FLOW DIAGRAM SAFEGUARD AND DIESEL GENERATOR BUILDING UNIT 1 FIRE PROTECTION
5. FOR SYSTEMS PIPING PLANS AND SECTIONS SEE GRINNELL FIRE PROTECTION SYSTEM DRAWINGS

FSAR FIGURE 9.5-47

THIS DRAWING CREATED ELECTRONICALLY

CP
-12

DRAWING M1-0225-04 REV CP-4
HAS BEEN SPLIT INTO THE FOLLOWING SHEETS:
M1-0225-04
M1-0225-04A

CLASS II

TXU ELECTRIC
CPSES
GLEN ROSE, TEXAS

FLOW DIAGRAM
FUEL BUILDING
FIRE PROTECTION

DWG. NO. M1-0225 | SH. NO. 04 | REV. CP-12

SSSSSSSDATESSSSSS

me0001wd.dgn

FIN. FL EL 873'-0"

1-FP-X-2036-160-5 XFP-0715 3-FP-X-179-160-5 4x3 4-FP-X-171-160-5 4-FP-X-171-160-5 CONTINUED ON M1-0225-02 LOC: D-2

2 1/2 -FP-X-2278-160-5 2 1/2

2-FP-X-180-160-5 4-FP-X-138-160-5 CONTINUED ON M1-0225-02 LOC: D-2

X-ZS-4106H-2 MS XFP-0407 X-ZS-4106H-1 MS XFP-0714 2-FP-X-184-160-5 4x2 4x3 3-FP-X-183-160-5 1-FP-X-2259-160-5 XFP-0431 X-ZS-4106F-1 MS XFP-0529 X-ZS-4106F-2 MS XFP-0430 2-FP-X-1278-160-5 CONTINUED ON M1-0225-02A LOC: B-3

2X7 1/2 FLANGE 2x7 1/2 FLANGE 2-FP-X-1277-160-5 CONTINUED ON M1-0225-02A LOC: E-3

X-TV-4106H-2 X-TV-4106H-2-A0 (XFP-0656) FC EMERGENCY FILTRATION UNIT CPX-VAFUPK-23 REF DWG 1 3" FLEX HOSE CPX-FPFLEX-23 RESTRICTING ORIFICE PLATE CPX-FPORDP-23 TO DRAIN HEADER

X-TV-4106H-1 X-TV-4106H-1-A0 (XFP-0654) FC EMERGENCY PRESSURIZATION UNIT CPX-VAFUPK-21 REF DWG 1 3" FLEX HOSE CPX-FPFLEX-21 RESTRICTING ORIFICE PLATE CPX-FPORDP-21 TO DRAIN HEADER

X-TV-4106F-1 X-TV-4106F-1-A0 (XFP-0655) FC EMERGENCY PRESSURIZATION UNIT CPX-VAFUPK-22 REF DWG 2 3" FLEX HOSE CPX-FPFLEX-22 RESTRICTING ORIFICE PLATE CPX-FPORDP-22 TO DRAIN HEADER

X-TV-4106F-2 X-TV-4106F-2-A0 (XFP-0657) FC EMERGENCY FILTRATION UNIT CPX-VAFUPK-24 REF DWG 2 3" FLEX HOSE CPX-FPFLEX-24 RESTRICTING ORIFICE PLATE CPX-FPORDP-24 TO DRAIN HEADER

2FP-0143 CP2-FPOREH-04 HOSE STATION CP2-FPFEEH-04

1FP-0144 CP1-FPOREH-07 HOSE STATION CP1-FPFEEH-07

FIN. FL EL 854'-4"

2-FP-X-160-160-5 4x2 4x2 2-FP-X-161-160-5 XFP-0164 CPX-FPOREH-01 HOSE STATION CPX-FPFEEH-01

XFP-0163 CPX-FPOREH-03 HOSE STATION CPX-FPFEEH-03

4-FP-X-159-160-5 2-FP-X-1456-160-5 XFP-0474 CPX-FPOREH-04 HOSE STATION CPX-FPFEEH-04

FIN. FLOOR EL. 840'-6"

4x2 2-FP-X-162-160-5 XFP-0161 CPX-FPOREH-02 HOSE STATION CPX-FPFEEH-02

WALL ELECTRIC CONTROL BUILDING AUXILIARY BUILDING X-PS-4104 PLANT INSTRUMENT AIR SUPPLY M1-0219-03 LOC: D-5 XFP-0743 X-FS-4104 X-HV-4104 X-HV-4104-SV1 (XFP-0742) X-ZS-4104 MS XFP-0158 4-FP-X-159-160-5 CONTINUED ON M1-0225-02 LOC: A-4

FIN. FL EL 830'-0"

ELECTRIC CONTROL BUILDING AUXILIARY BUILDING SYSTEM 786-9181 UNIT 2 CABLE SPREADING ROOM NORTH HALF M2-1990-95 R WALL 8-FP-2-740-160-5 1-FP-2-3258-160-5 2-PS-4104A D 2FP-0434 8x6 2FP-0418 PLANT NITROGEN SUPPLY M1-0243-A LOC: E-4 6-FP-2-332-160-5 2-ZS-4104A MS 2FP-0411 2-HV-4104A 2-FS-4104A 2-HV-4104A-SV1 (2FP-0410) 2FP-0414 1-FP-2-3255-160-5 D

ELECTRIC CONTROL BUILDING AUXILIARY BUILDING SYSTEM 786-9141 UNIT 2 CABLE SPREADING ROOM SOUTH HALF M2-1990-95 R CONTINUED ON M1-0225-02 LOC: A-4 WALL 8-FP-2-845-160-5 1-FP-2-3259-160-5 2-PS-4104B D 2FP-0435 8x6 2FP-0433 PLANT NITROGEN SUPPLY M1-0243-A LOC: E-4 2-ZS-4104B MS 2FP-0413 2-HV-4104B 2-FS-4104B 2-HV-4104B-SV1 (2FP-0412) 2FP-0415 1-FP-2-3254-160-5 D

ELECTRIC CONTROL BUILDING AUXILIARY BUILDING CONTINUED ON M1-0225-02 LOC: A-5 SYSTEM 786-9161 UNIT 1 CABLE SPREADING ROOM NORTH HALF DWG-0094 DRAIN VALVES 1FP-0671 1FP-0672 6-FP-2-324-160-5 1FP-0455 1-FP-1-2782-160-5 CP1-FPOREC-02 1 1/2 " HOSE CONNECTION WALL 8-FP-1-293-160-5 1-PS-4104A D 1FP-0441 8x6 1FP-0439 PLANT NITROGEN SUPPLY M1-0243-A LOC: D-4 6-FP-1-456-160-5 1-ZS-4104A MS 1FP-0453 1-HV-4104A 1-FS-4104A 1-HV-4104A-SV1 (1FP-0451) 1FP-0457 D

1FP-0102 CP1-FPOREH-03 HOSE STATION CP1-FPFEEH-03 2-FP-1-103-160-5 1-FP-1-6032-160-5 1FP-0659 ELECTRIC CONTROL BUILDING AUXILIARY BUILDING CONTINUED ON M1-0225-02 LOC: C-4 WALL SYSTEM 786-9121 UNIT 1 CABLE SPREADING ROOM SOUTH HALF DWG-0094 DRAIN VALVES 1FP-0470 , 1FP-0665 , 1FP-0666 , 1FP-0667 , 1FP-0668 , 1FP-0669 AND 1FP-0670 1FP-0456 1-FP-1-2912-160-5 CP1-FPOREC-01 1 1/2 " HOSE CONNECTION 8-FP-1-292-160-5 1-PS-4104B D 1FP-0443 8x6 1FP-0440 PLANT NITROGEN SUPPLY M1-0243-A LOC: D-4 6-FP-1-452-160-5 1-ZS-4104B MS 1FP-0454 1-HV-4104B 1-FS-4104B 1-HV-4104B-SV1 (1FP-0452) 1FP-0458 D

4x2 2-FP-1-102-160-5 4-FP-1-101-160-5 CONTINUED ON M1-0225-02 LOC: G-5 CONTINUED ON M1-0225-02A LOC: G-5 R 2-FP-2-104-160-5 4x2 4x2 4-FP-2-103-160-5 CONTINUED ON M1-0225-02 LOC: C-4 2-FP-2-101-160-5 1FP-0101 CP1-FPOREH-04 HOSE STATION CP1-FPFEEH-04 2FP-0102 CP2-FPOREH-03 HOSE STATION CP2-FPFEEH-03 2FP-0101 CP2-FPOREH-02 HOSE STATION CP2-FPFEEH-02

FIN. FL EL 807'-0"

2FP-0108 V 2FP-0105 LO 3x2 2FP-0109 3-FP-2-105-160-5 CONTINUED ON M2-0225-01 LOC: G-4 6-FP-X-134-160-5 CONTINUED ON M1-0225-02 LOC: A-6

1FP-0103 V 1FP-0112 LO 3x2 1FP-0104 3-FP-1-107-160-5 2-FP-1-104-160-5 2-FP-2-102-160-5 CONTINUED ON M1-0225-01 LOC: F-4 6-FP-X-133-160-5 CONTINUED ON M1-0225-02A LOC: A-6

DRAIN VALVE XFP-0117 SYS 785-X081 WATER CURTAIN M1-1990-134 LOC: D-1 2 1/2 -FP-X-6300-160-5 XFP-0115 LO 3-FP-X-2921-160-5 DRAIN VALVE XFP-0116 SYS 785-X081 M1-1990-134 LOC: F-3 2-FP-X-1279-160-5 1FP-0106 CP1-FPOREH-02 HOSE STATION CP1-FPFEEH-02 2FP-0103 CP2-FPOREH-01 HOSE STATION CP2-FPFEEH-01

WALL CONTINUED ON M1-0225-02 LOC: A-6 4-FP-X-2694-160-5 4-FP-X-2694-160-5 XFP-0114 LO DRAIN VALVES XFP-0754 XFP-0755 XFP-0756 XFP-0758 SYS 785-X081 SEE NOTE 3 M1-1990-134 LOC: F-3 XFP-0753 1-FP-X-2725-160-5 CPX-FPOREC-02 1 1/2 " HOSE CONNECTION AUXILIARY BUILDING ELECTRIC CONTROL BUILDING

FIN. FL EL 778'-0"

1FP-0143 CP1-FPOREH-06 HOSE STATION CP1-FPFEEH-06

FIN. FLOOR EL 792'-0"

2-FP-2-106-160-5 1FP-0111 1FP-0117 CP1-FPOREH-01 HOSE STATION CP1-FPFEEH-01

SYS 785-X061 SEE NOTE 2 M1-1990-146A LOC: C-6 6-FP-X-1553-160-5 WALL CONTINUED ON M1-0225-02A LOC: D-6 DRAIN VALVES XFP-0546 XFP-0763 XFP-0764 XFP-0765 XFP-0767 1-FP-X-3068-160-5 CPX-FPOREC-01 1 1/2 " HOSE CONNECTION ELECTRIC CONTROL BUILDING AUXILIARY BUILDING

ELECTRIC CONTROL BUILDING

REV	DWN	CHK	APVD	REMARKS
CP-15	DLK 09-10-2007	MM 09-11-2007		THIS DRAWING REVISED TO INCORPORATE DESIGN CHANGE FDA 2004-000481-01-00 PER SK-0002-04-000481-01-00.

NOTES:

1. FOR GENERAL NOTES AND LEGEND SEE DRAWING M1-0225.
2. SYSTEM No 785-X061 TO ALL AREAS ON SOUTH SIDE ELEVATION 778'-0" AND BATTERY ROOM CORRIDOR ELEVATION 792'-0".
3. SYSTEM No 785-X081 TO ALL AREAS ON NORTH SIDE ELEVATION 778'-0" AND BATTERY ROOM CORRIDOR ELEVATION 792'-0".

REFERENCE DWGS:

1. FLOW DIAGRAM VENT AND CONT RM AIR CONDITIONING M1-0304
2. FLOW DIAGRAM VENT AND CONT RM AIR CONDITIONING M1-0304-B

FSAR FIGURE 9.5-47

THIS DRAWING CREATED ELECTRONICALLY

DRAWING M1-0225-04 REV CP-4
HAS BEEN SPLIT INTO THE FOLLOWING SHEETS:
M1-0225-04
M1-0225-04A

CLASS I
(NUCLEAR SAFETY-RELATED)
SAFETY CLASS 1 SAFETY CLASS 2 SAFETY CLASS 3
SEISMIC CATEGORY I
CLASS 1E
ASSOCIATED CIRCUITS

LUMINANT
CPSES
GLEN ROSE, TEXAS

FLOW DIAGRAM
ELECTRIC CONTROL BUILDING
FIRE PROTECTION

DWG. NO. M1-0225 | SH. NO. 04A | REV. CP-15

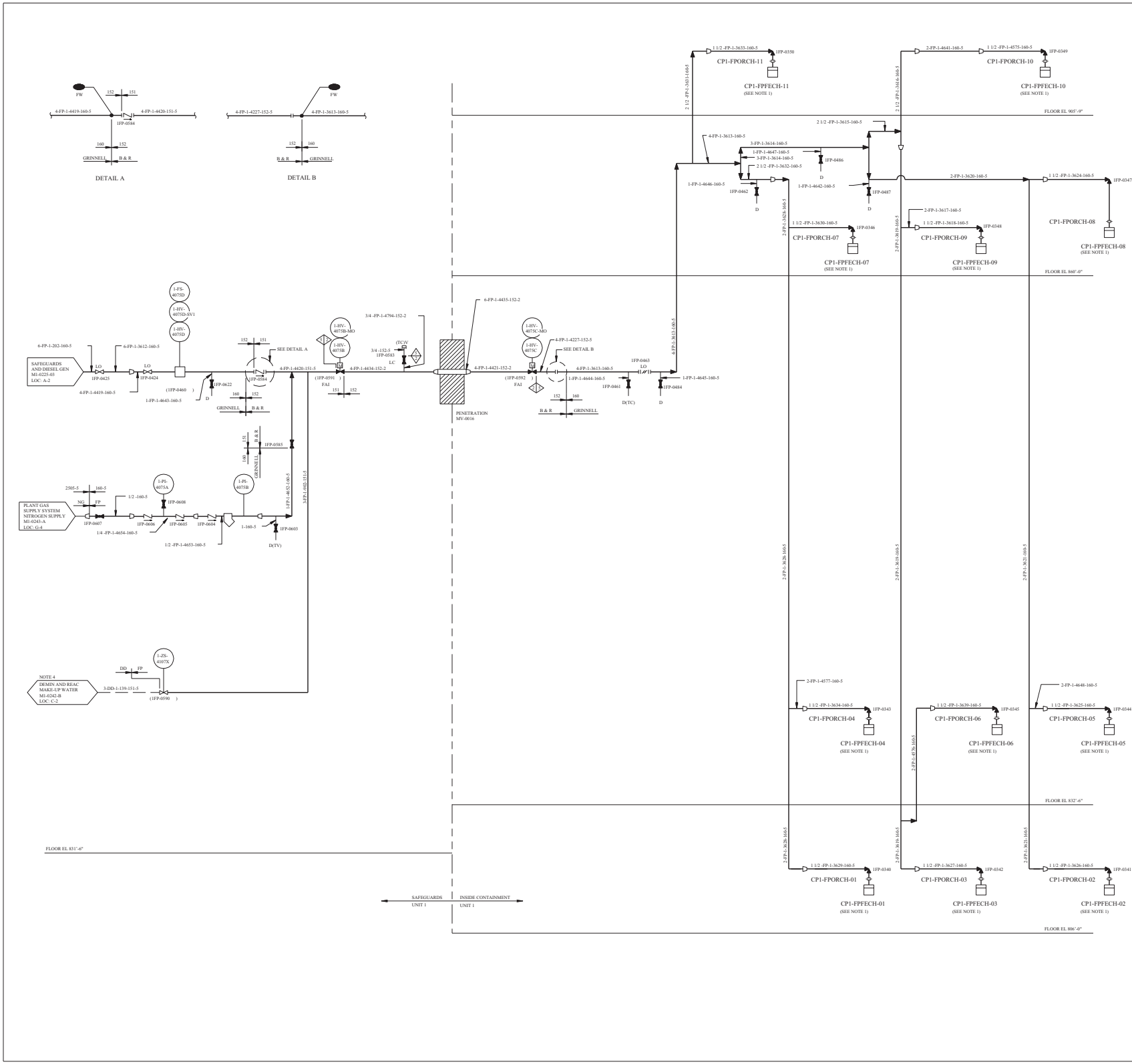

REV	DWN	CHKD	APVD	REMARKS
CP-12	RMS 06-04 1996			THIS DRAWING REVISED TO ADD THE FSAR FIGURE NUMBER AS AN EDITORIAL CHANGE.

NOTES:

1. HOSE, NOZZLES AND SPANNER WRENCHES FOR HOSE STATIONS IN CONTAINMENT BUILDING ARE STORED IN HOSE RACKS LOCATED NEAR PERSONNEL AIR-LOCK IN SAFEGUARDS BUILDING.
2. PROVIDE VENT VALVES AT THE HIGH POINTS AND DRAIN VALVES AT THE LOW POINTS.
3. DELETED
4. FIRE PROTECTION DEMINERALIZED WATER SUPPLY TO DELUGE SYSTEMS FOR FILTRATION UNITS CP1-VAFUPK-17 AND CP1-VAFUPK-18 INSIDE CONTAINMENT UNIT 1.
5. DELETED
6. UNLESS OTHERWISE NOTED, ALL DRAINS ARE COLLECTED LOCALLY UNDER ADMINISTRATIVE CONTROLS.
7. VALVE NUMBERS IN PARENTHESIS ARE VALVE BODY NUMBERS PER ECE 5.04-02, AND ARE ENTERED FOR HISTORICAL INFORMATION ONLY.

REFERENCE DRAWINGS:

1. FLOW DIAGRAM FIRE PROTECTION SYSTEM DRAWING M1-0225 AND M1-0200 FOR SYMBOLS AND GENERAL NOTES
2. GRINNELL FIRE PROTECTION DRAWINGS 131 AND 132 (PO CP-702)

FSAR FIGURE 9.5-48

CP 12

THIS DRAWING CREATED ELECTRONICALLY

CLASS I
(NUCLEAR SAFETY-RELATED)
SAFETY CLASS 1 SEISMIC CATEGORY I
SAFETY CLASS 2 CLASS IE
SAFETY CLASS 3 ASSOCIATED CIRCUITS

TXU ELECTRIC
CPSES
GLEN ROSE, TEXAS

FLOW DIAGRAM
CONTAINMENT BUILDING UNIT 1
FIRE PROTECTION

DWG. NO.	SH. NO.	REV.
M1-0225	05	CP-12

vs000097.dgn

SSSSSSSDATESSSSSS

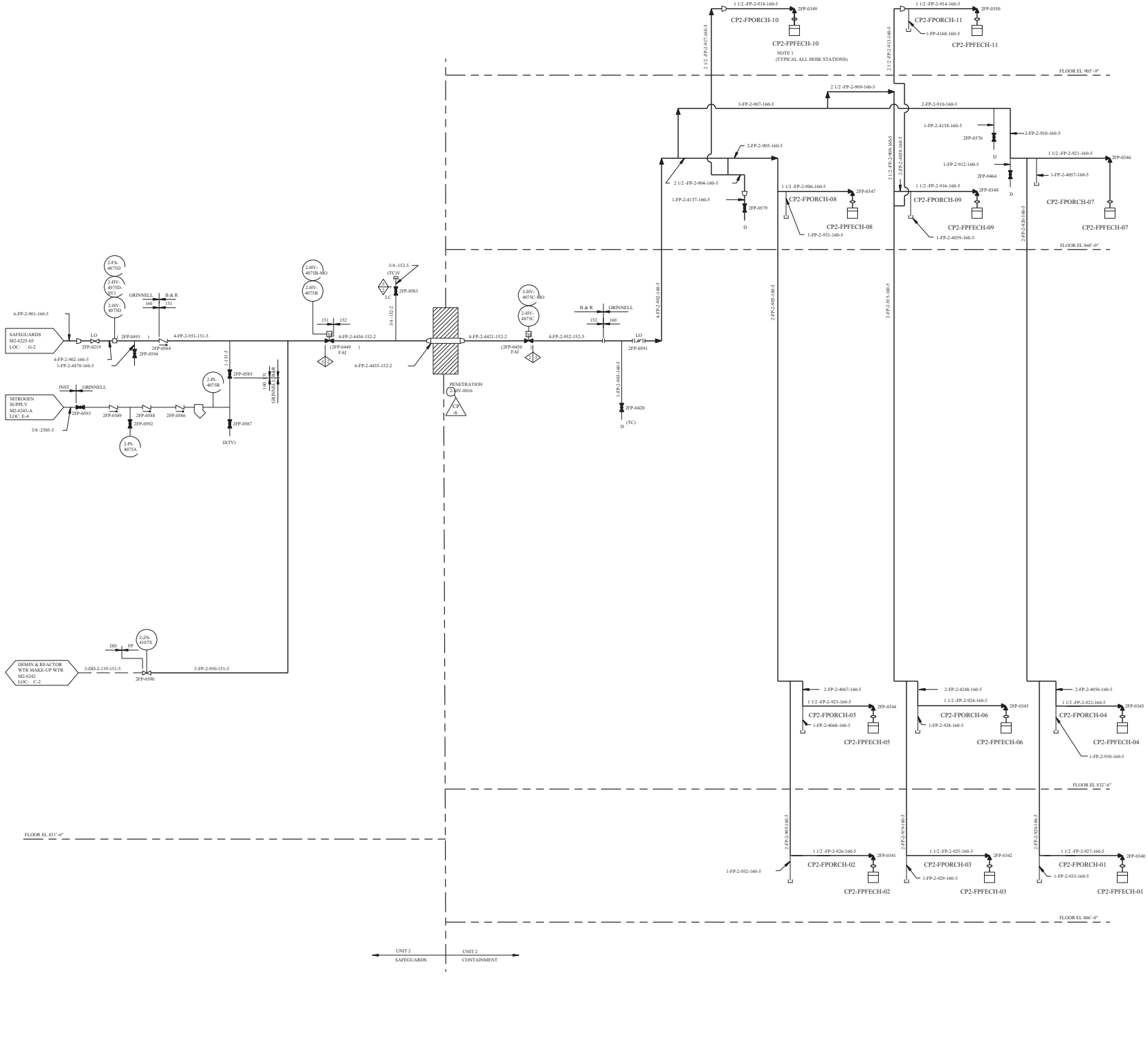

REV	DWN	CHKD	APVD	REMARKS
CP-6	RAM 10-06-1998			THIS DRAWING REVISED TO INCORPORATE AN EDITORIAL CHANGE AS NOTED.

NOTES

1. FOR CONTAINMENT PREACCESS FILTRATION UNIT CP2-VAFUPK-17 AND CP2-VAFUPK-18 DELUGE SYSTEM ARRANGEMENT, SEE FLOW DIAGRAM M2-0242.
2. PROVIDE VENT VALVES AT THE HIGH POINTS AND DRAIN VALVE AT THE LOW POINTS.
3. UNLESS OTHERWISE NOTED, ALL DRAINS ARE COLLECTED LOCALLY UNDER ADMINISTRATIVE CONTROLS.
4. FOR FIRE PROTECTION COMMON SUPPPLY HEADER/UNIT 2 SYSTEM BOUNDARIES, SEE DRAWINGS M2-0225-01, M2-0225-03, M1-0225-02 AND M1-0225-06.

REFERENCE DRAWINGS

1. FLOW DIAGRAM FIRE PROTECTION SYSTEM DWG M1-0225 AND MECHANICAL DWG M1-0200.
2. M2-1990 SHEETS 119 AND 120.

FSAR FIGURE 9.5-48

THIS DRAWING CREATED ELECTRONICALLY

CLASS I
(NUCLEAR SAFETY-RELATED)
SAFETY CLASS 1 SEISMIC CATEGORY I
SAFETY CLASS 2 CLASS 1E
SAFETY CLASS 3 ASSOCIATED CIRCUITS

TXU ELECTRIC
CPSES
GLEN ROSE, TEXAS

FLOW DIAGRAM
CONTAINMENT BUILDING UNIT 2
FIRE PROTECTION

DWG. NO.	SH. NO.	REV.
M2-0225	05	CP-6

SSSSSSDATESSSSSS

me0001b3.dgn

FIGURES 9.5-49 AND 9.5-50
HAVE BEEN DELETED

FIGURES 9.5-49 AND 9.5-50
HAVE BEEN DELETED

NOTE:
FOR LOCATION OF TANKS
SEE DWG FIG 9.5-8 & 1.2-8

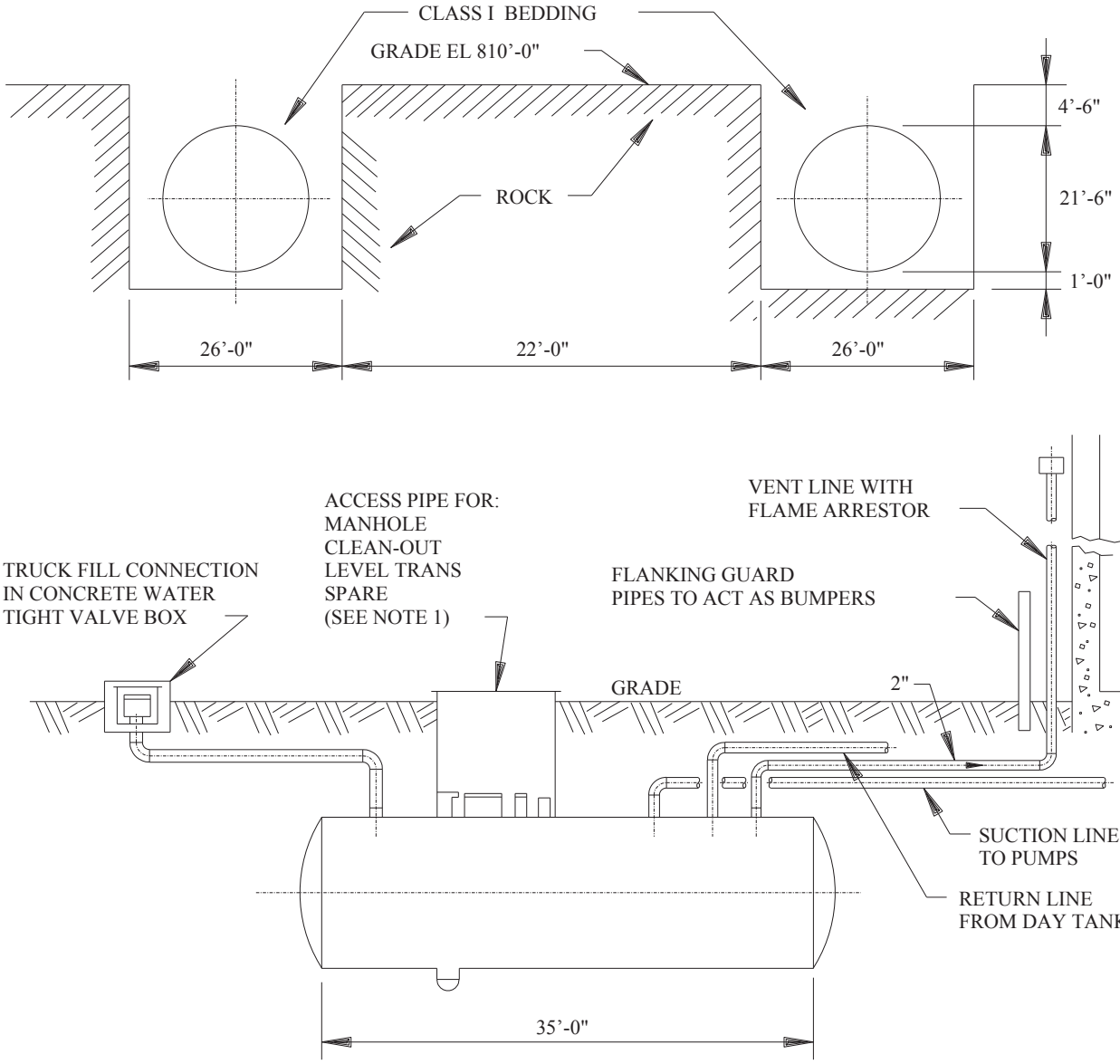

DIESEL FUEL OIL TANK

NOTES:

1. SAMPLE GRAB POINT CONNECTION PROVIDES ADDITIONAL TRUCK FILL METHOD VIA USE OF SPECIAL DIFFUSER TOOL. THIS BOX IS MAINTAINED WATERTIGHT.

Amendment 104

COMANCHE PEAK N P P
FINAL SAFETY ANALYSIS REPORT
UNITS 1 AND 2

DIESEL GENERATOR
FUEL OIL STORAGE TANKS

FIGURE 9.5-51

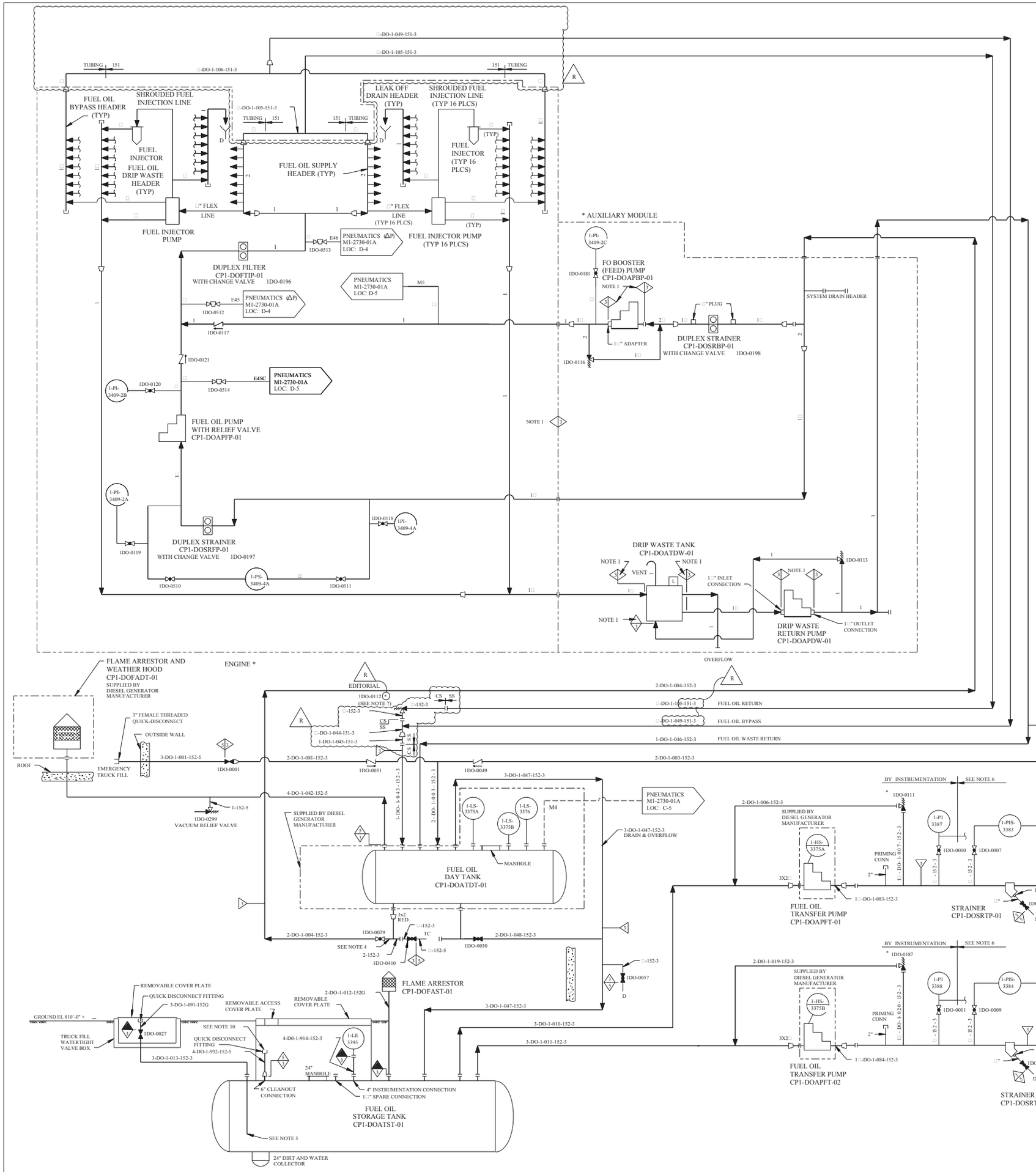

REV	DWN	CHKD	APVD	REMARKS
CP-8	DLK 11-26-2012	MM 01-08-2013		THIS DRAWING REVISED TO INCORPORATE DESIGN CHANGE FDA 2012-000130-02-00 PER SK-0001-12-000130-02-00. EDITORIAL CHANGE AS NOTED.

NOTES:

1. NUCLEAR SAFETY RELATED PER 1EEE-387. NOT IN SCOPE OF ANSI N18.2. EXEMPT FROM CODE STAMP.
2. SEE DRAWING M2-0215 SH F FOR UNIT 2 DIESELS (CP2-MEDGEE-01 AND -02).
3. ALL ITEMS MARKED * ARE SUPPLIED BY TRANSAMERICA DELAVAL.
4. THE FIRST HORIZONTAL PIPING RUN IS SLOPED BACK TOWARDS VALVE 1D0-0410.
5. FILL LINE RUN TO WITHIN 2 FEET OF BOTTOM OF TANK. THE END OF THE FILL LINE IS CAPPED AND THE LAST 2 FEET OF THE PIPE IS PERFORATED WITH APPROXIMATELY 16 1" DIAMETER HOLES.
6. TO FUEL OIL "GRAB SAMPLE" CONNECTION SEE M1-2533 SH 02 (NON-SAFETY RELATED).
7. EQUIPMENT IS SAFETY CLASS 3, NON-ASME.
8. ALL DRAINS ARE □" UNLESS OTHERWISE NOTED.
9. SEE FORM CAT 123 FROM CP-0034-001A FOR VENDOR SUPPLIED MECHANICAL SYMBOLS.
10. ALTERNATE FILL METHOD CONNECTION POINT. BOX WITH ACCESS COVER PLATE IS MAINTAINED WATERTIGHT.

EQUIPMENT SCHEDULE

MANUFACTURERS I.D.	TAG NO.

FSAR FIGURE 9.5-52

THIS DRAWING CREATED ELECTRONICALLY

DRAWING M1-0215 REV CP-11
HAS BEEN SPLIT INTO THE FOLLOWING SHEETS:

M1-0215
M1-0215-B
M1-0215-D
M1-0215-F
M1-0215-H

CLASS I
(NUCLEAR SAFETY-RELATED)

SAFETY CLASS 1	SEISMIC CATEGORY I
SAFETY CLASS 2	CLASS 1E
SAFETY CLASS 3	ASSOCIATED CIRCUITS

LUMINANT
CPNPP
GLEN ROSE, TEXAS

FLOW DIAGRAM
DIESEL FUEL OIL PIPING
CP1-MEDGEE-01

DWG. NO.	SH. NO.	REV.
M1-0215	F	CP-8

$$$$$$$$DATE$$$$$$$$ REF CKD CP-5 4/23/98

me102410.dgn M1-0215-F < FINAL PRINT >

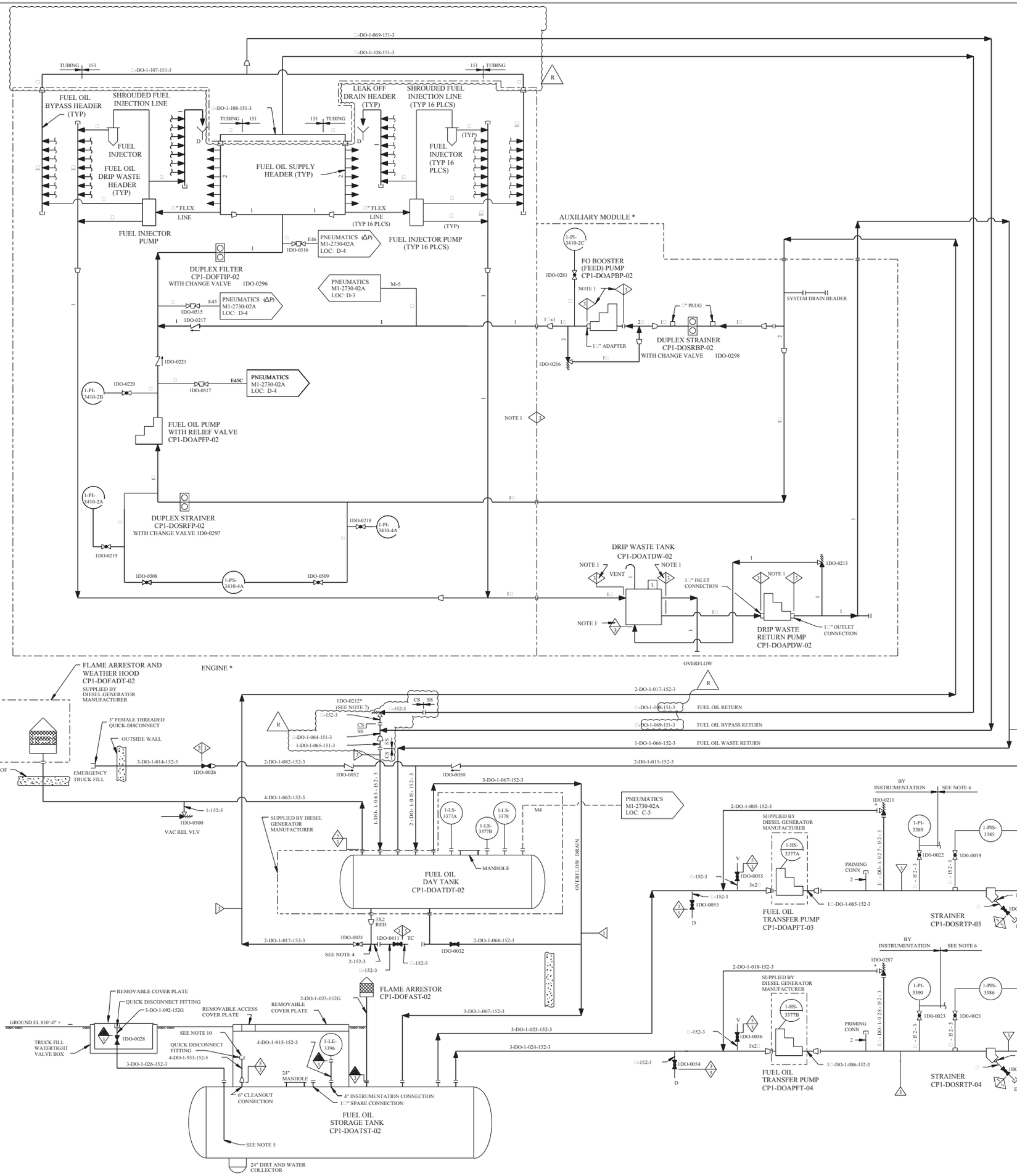

REV	DWN	CHKD	APVD	REMARKS
CP-9	DLK 11-29 2012	MM 01-11 2013		THIS DRAWING REVISED TO INCORPORATE DESIGN CHANGE FDA 2012-000130-03-00 PER SK-0001-12-000130-03-00.

NOTES:

1. NUCLEAR SAFTEY RELATED PER 1EEE-387. NOT IN SCOPE OF ANSI N18.2. EXEMPT FROM CODE STAMP.
2. SEE DWG M2-0215 SH G FOR UNIT 2 DIESELS (CP2-MEDGEE-01 AND CP2-MEDGEE-02).
3. ALL ITEMS MARKED * ARE SUPPLIED BY TRANSAMERICA DELAVAL.
4. THE FIRST HORIZONTAL PIPING RUN IS SLOPED BACK TOWARD VALVE 1DO-0411.
5. FILL LINE RUN TO WITHIN 2 FEET OF BOTTOM OF TANK. THE END OF THE FILL LINE IS CAPPED AND THE LAST 2 FEET OF THE PIPE IS PERFORATED WITH APPROXIMATELY 16-1" DIAMETER HOLES.
6. TO FUEL OIL "GRAB SAMPLE" CONNECTION SEE M1-2533-02 (NON-SAFETY RELATED).
7. EQUIPMENT IS SAFETY CLASS 3, NON-ASME.
8. ALL DRAINS ARE □" UNLESS OTHERWISE NOTED.
9. SEE FORM CAT-123 FROM CP-0034-001A FOR VENDOR SUPPLIED MECHANICAL SYMBOLS.
10. ALTERNATE FILL METHOD CONNECTION POINT. BOX WITH ACCESS COVER PLATE IS MAINTAINED WATERTIGHT.

EQUIPMENT SCHEDULE

MANUFACTURERS I.D.	TAG NO.

FSAR FIGURE 9.5-52

THIS DRAWING CREATED ELECTRONICALLY

DRAWING M1-0215-A REV CP-6
HAS BEEN SPLIT INTO THE FOLLOWING SHEETS:

M1-0215-A
M1-0215-C
M1-0215-E
M1-0215-G
M1-0215-J

CLASS I
(NUCLEAR SAFETY-RELATED)

SAFETY CLASS 1	SEISMIC CATEGORY I
SAFETY CLASS 2	CLASS 1E
SAFETY CLASS 3	ASSOCIATED CIRCUITS

LUMINANT
CPNPP
GLEN ROSE, TEXAS

FLOW DIAGRAM
DIESEL FUEL OIL PIPING
CP1-MEDGEE-02

DWG. NO.	SH. NO.	REV.
M1-0215	G	CP-9

$$$$$$$DATE$$$$$$ REF CKD CP-5 4/23/98

me102400.dgn A M1-0215-G B C D E F G < FINAL PRINT > H

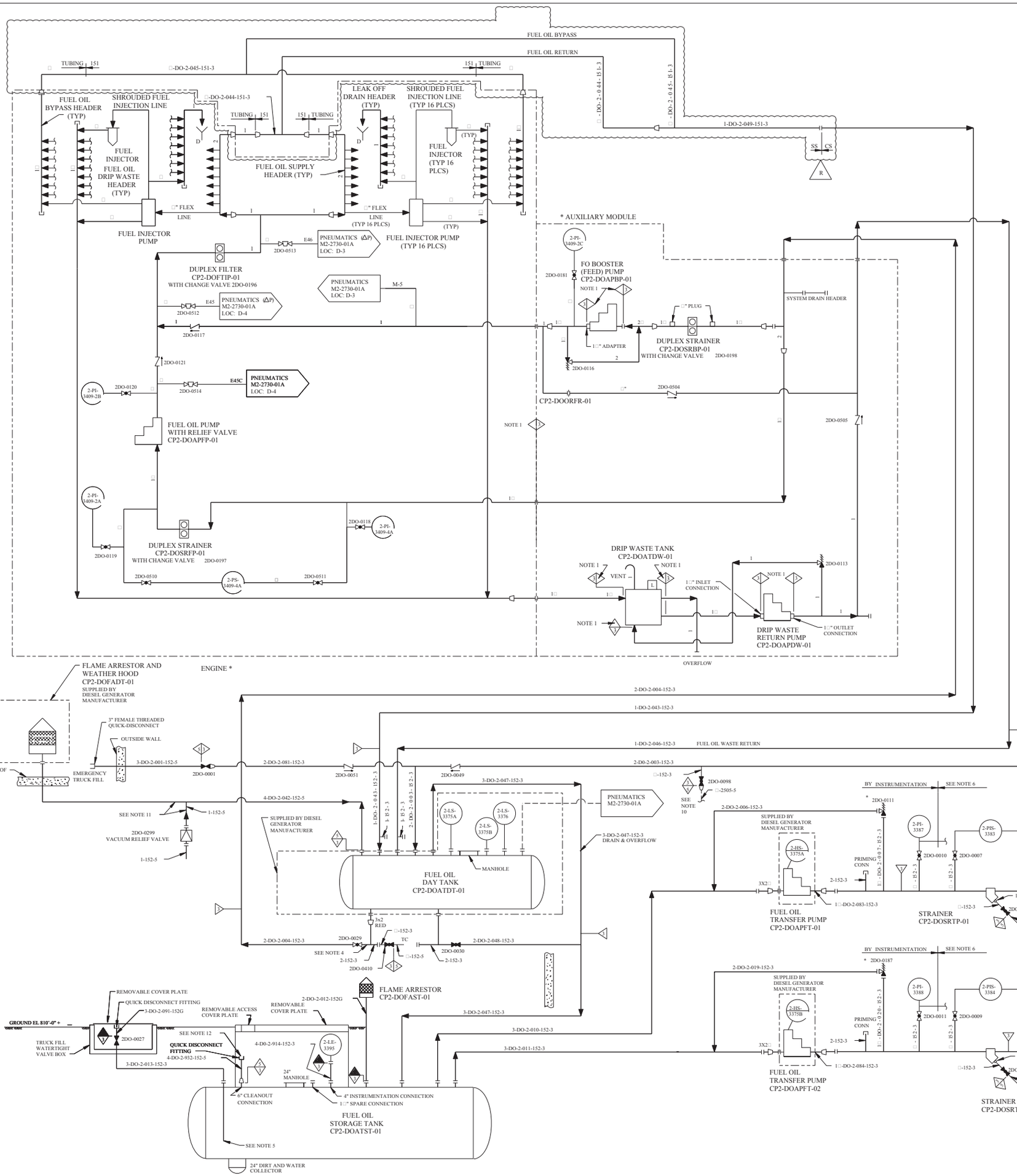

REV.	DWN	CHKD	APVD	REMARKS
CP-9	DLK 04-08-2013	MM 07-17-2013		THIS DRAWING REVISED TO INCORPORATE DESIGN CHANGE FDA 2012-0001/30-04-00 PER SK-0001-12-0001/30-04-00. EDITORIAL CHANGE AS NOTED.

NOTES:

1. NUCLEAR SAFETY RELATED PER IEEE-387. NOT IN SCOPE OF ANSI N18.2. EXEMPT FROM CODE STAMP.
2. SEE DRAWING M1-0215 SH-F AND SH-G FOR UNIT 1 DIESELS (CP1-MEDGEE-01 AND CP1-MEDGEE-02).
3. ALL ITEMS MARKED * ARE SUPPLIED BY TRANSAMERICA DELAVAL.
4. THE FIRST HORIZONTAL PIPING RUN IS SLOPED BACK TOWARDS VALVE 2DO-0410 .
5. FILL LINE RUN TO WITHIN 2 FEET OF BOTTOM OF TANK. THE END OF THE FILL LINE IS CAPPED AND THE LAST 2 FEET OF THE PIPE IS PERFORATED WITH APPROXIMATELY 16 1" DIAMETER HOLES.
6. TO FUEL OIL "GRAB SAMPLE" CONNECTION SEE M2-2533 SH 02 (NON-SAFETY RELATED).
7. DELETED
8. ALL DRAINS ARE □" UNLESS OTHERWISE NOTED.
9. SEE FORM CAT 123 FROM CP-0034-001A FOR VENDOR SUPPLIED MECHANICAL SYMBOLS.
10. TO FUEL OIL SAMPLE STATION. (BY INSTRUMENTATION)
11. FUEL OIL DAY TANK VENT PIPING IS SEISMICALLY ANALYZED.
12. ALTERNATE FILL METHOD CONNECTION POINT. BOX WITH ACCESS COVER PLATE IS MAINTAINED WATERTIGHT.

R EDITORIAL

EQUIPMENT SCHEDULE

MANUFACTURERS I.D.	TAG NO.

FSAR FIGURE 9.5-52

THIS DRAWING CREATED ELECTRONICALLY

DRAWING 2323-M2-0215 REV CP-3	
HAS BEEN SPLIT INTO THE FOLLOWING SHEETS:	
M2-0215	M2-0215-E
M2-0215-A	M2-0215-F
M2-0215-B	M2-0215-G
M2-0215-C	M2-0215-H
M2-0215-D	M2-0215-J

CLASS I
(NUCLEAR SAFETY-RELATED)
SAFETY CLASS 1 SEISMIC CATEGORY I
SAFETY CLASS 2 CLASS 1E
SAFETY CLASS 3 ASSOCIATED CIRCUITS

LUMINANT
CPNPP
GLEN ROSE, TEXAS

FLOW DIAGRAM
DIESEL FUEL OIL PIPING
CP2-MEDGEE-01

DWG. NO.	SH. NO.	REV.
M2-0215	F	CP-9

$$$$$$$$DATE$$$$$$$$

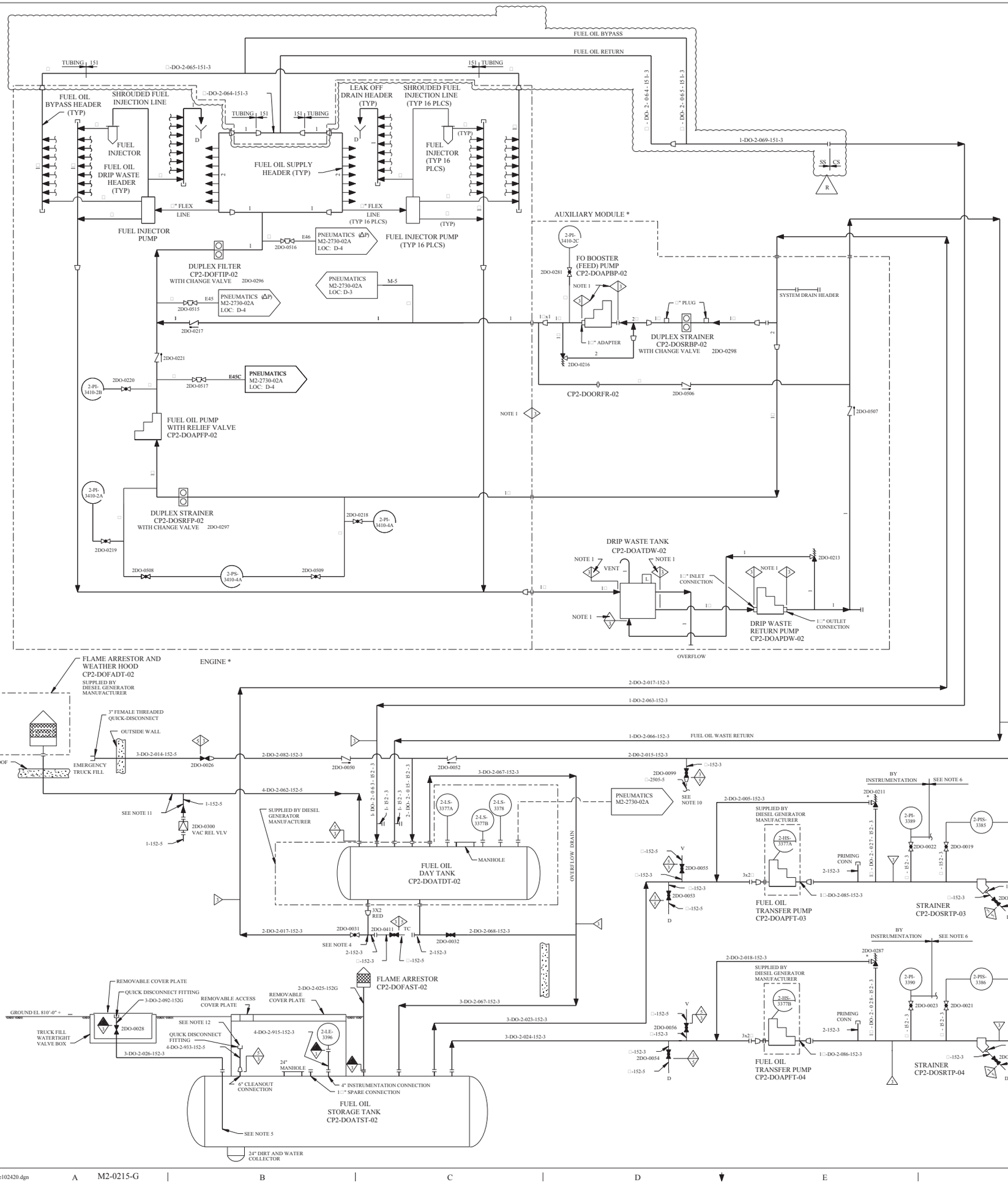

REV	DWN	CHK	APVD	REMARKS
CP-12	DLK 04-08 2013	MM 08-20 2013		THIS DRAWING REVISED TO INCORPORATE DESIGN CHANGE FDA 2012-0001 30-05-00 PER SK-0001-12-000130-05-00. EDITORIAL CHANGE AS NOTED.

NOTES:

1. NUCLEAR SAFETY RELATED PER IEEE-387. NOT IN SCOPE OF ANSI N18.2. EXEMPT FROM CODE STAMP.
2. SEE DRAWING M1-0215 SH -F AND SH -G FOR UNIT 1 DIESELS (CP1-MEDGEE-01 AND CP1-MEDGEE-02).
3. ALL ITEMS MARKED * ARE SUPPLIED BY TRANSAMERICA DELAVAL.
4. THE FIRST HORIZONTAL PIPING RUN IS SLOPED BACK TOWARDS VALVE 2DO-0411 .
5. FILL LINE RUN TO WITHIN 2 FEET OF BOTTOM OF TANK. THE END OF THE FILL LINE IS CAPPED AND THE LAST 2 FEET OF THE PIPE IS PERFORATED WITH APPROXIMATELY 16 1" DIAMETER HOLES.
6. TO FUEL OIL "GRAB SAMPLE" CONNECTION SEE M2-2533 SH 02 (NON-SAFETY RELATED).
7. DELETED
8. ALL DRAINS ARE □" UNLESS OTHERWISE NOTED.
9. SEE FORM CAT 123 FROM CP-0034-001A FOR VENDOR SUPPLIED MECHANICAL SYMBOLS.
10. TO FUEL OIL SAMPLE STATION (BY INSTRUMENTATION).
11. **FUEL OIL DAY TANK VENT PIPING IS SEISMICALLY ANALYZED.**
12. ALTERNATE FILL METHOD CONNECTION POINT. BOX WITH ACCESS COVER PLATE IS MAINTAINED WATERTIGHT.

R EDITORIAL

EQUIPMENT SCHEDULE

MANUFACTURERS I.D.	TAG NO.

FSAR FIGURE 9.5-52

THIS DRAWING CREATED ELECTRONICALLY

DRAWING 2323-M2-0215 REV CP-3

HAS BEEN SPLIT INTO THE FOLLOWING SHEETS:

M2-0215	M2-0215-E
M2-0215-A	M2-0215-F
M2-0215-B	M2-0215-G
M2-0215-C	M2-0215-H
M2-0215-D	M2-0215-J

CLASS I
(NUCLEAR SAFETY-RELATED)
SAFETY CLASS 1 SAFETY CLASS 2 SAFETY CLASS 3
SEISMIC CATEGORY I
CLASS 1E
ASSOCIATED CIRCUITS

LUMINANT
CPNPP
GLEN ROSE, TEXAS

FLOW DIAGRAM
DIESEL FUEL OIL PIPING
CP2-MEDGEE-02

DWG. NO. M2-0215 | SH. NO. G | REV. CP-12

$$$$$$$ DATE $$$$$$$

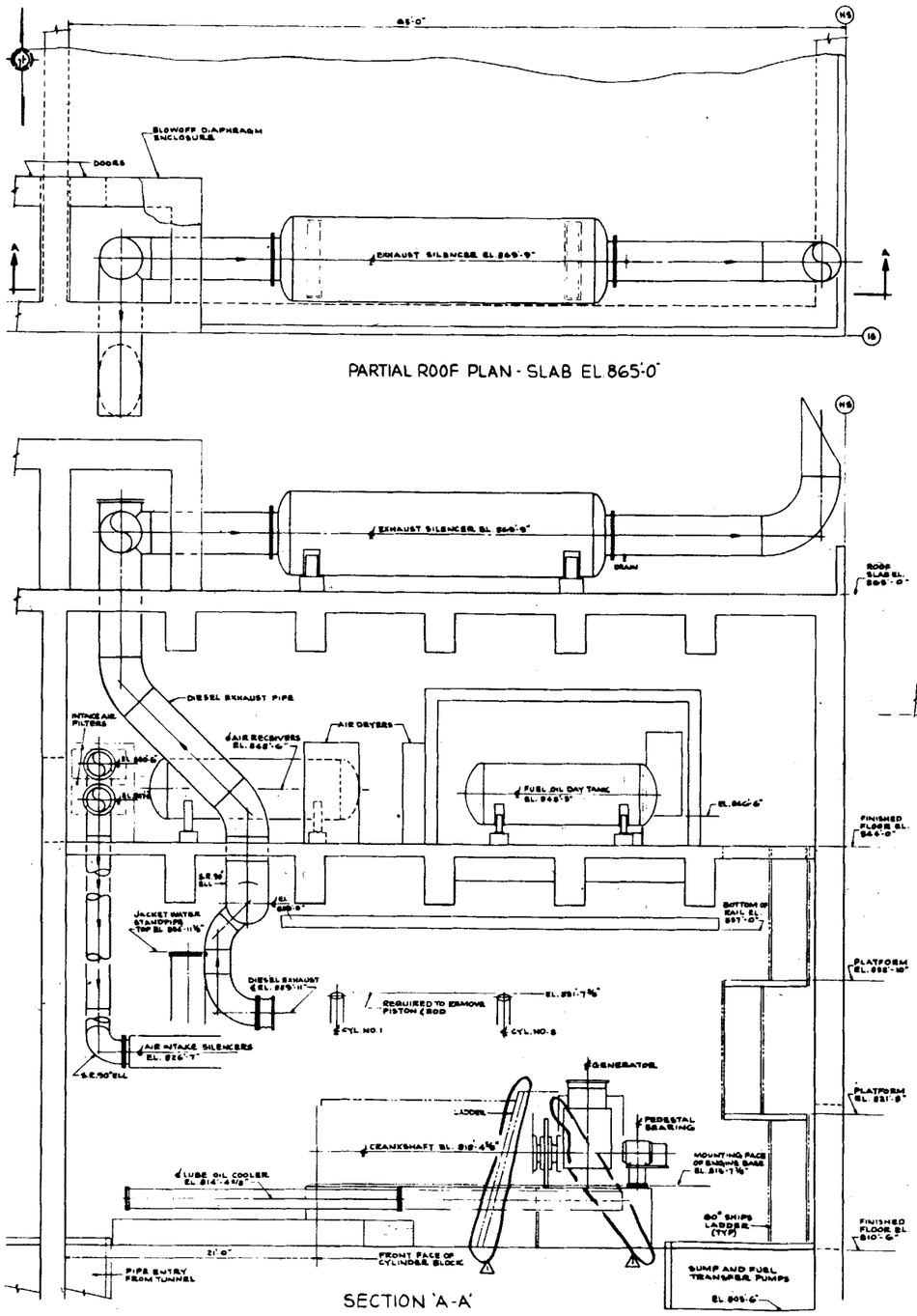

PARTIAL ROOF PLAN - SLAB EL 865'-0"

SECTION 'A-A'

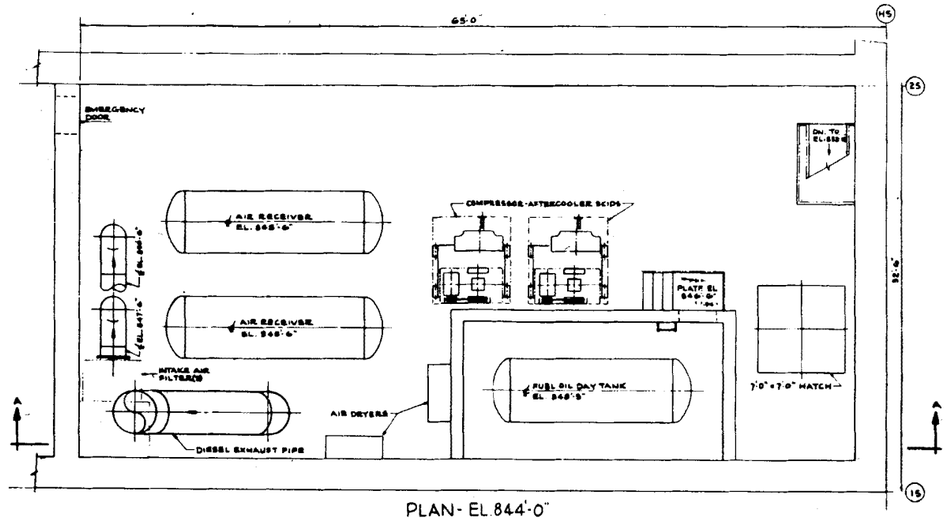

PLAN - EL 844'-0"

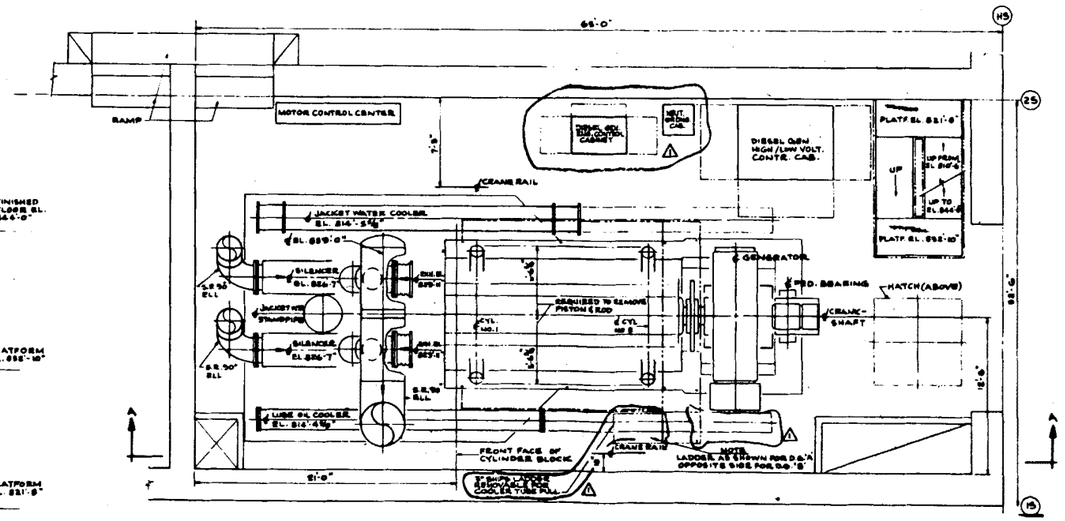

PLAN - EL. 810'-6"

WORK THIS DRAWING WITH 2323-MI-0017

COMANCHE PEAK S.E.S. FINAL SAFETY ANALYSIS REPORT UNITS 1 and 2
GENERAL ARRANGEMENT DIESEL GENERATOR AREA
FIGURE 9.5-53

June 15, 1978

2323-MI-0018, REV. 1

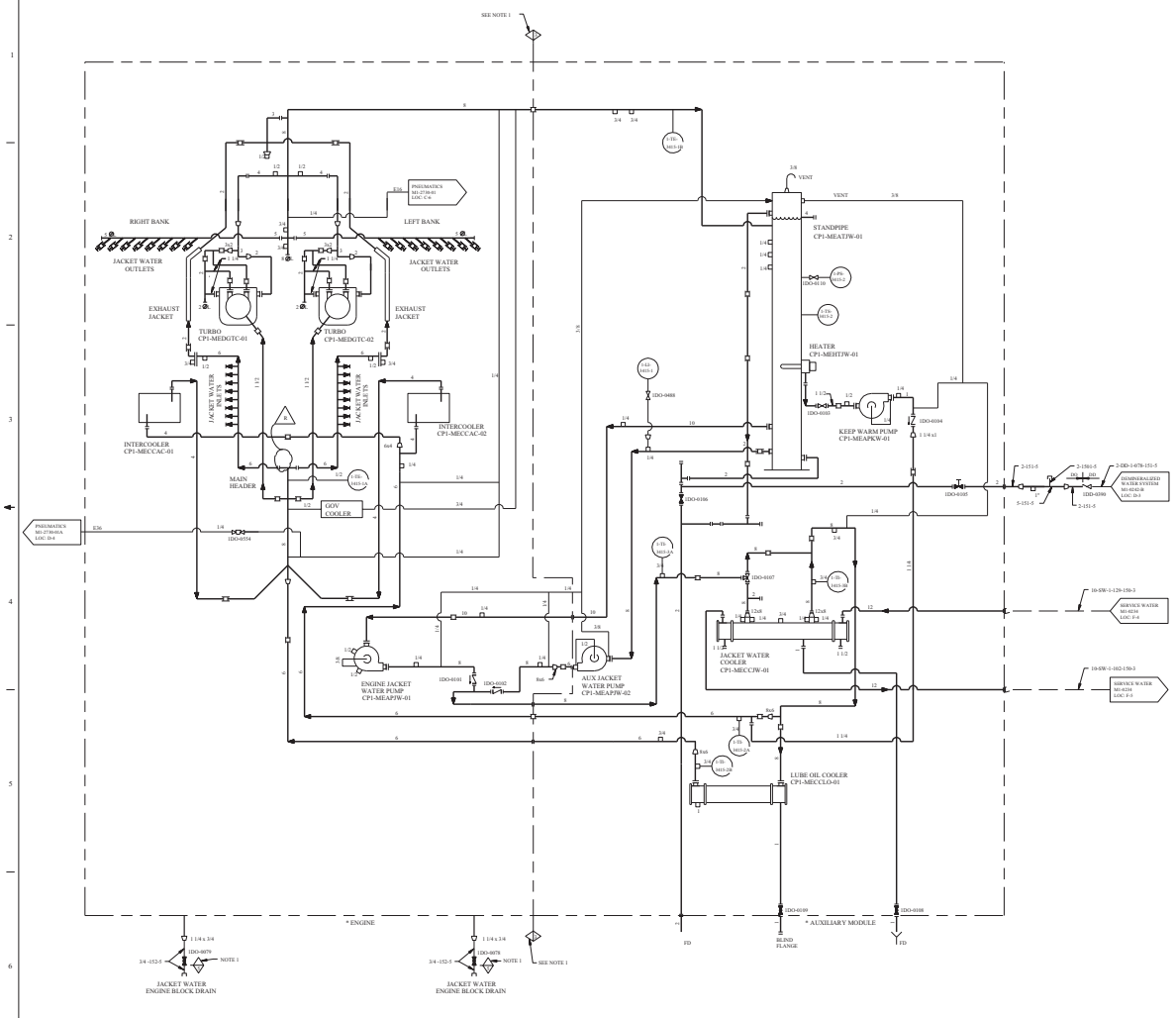

REV	ORIGINATOR	APVD	REMARKS
H-10	[illegible]	[illegible]	THIS DRAWING REVISED TO INCORPORATE DESIGN CHANGE FSA-2001-000101-01 AS PER NL-0001-01-0001-01-01

LEGEND

- DRESSER COUPLING
- 1/2 COUPLING WITH PIPE PLUG

NOTES

1. NUCLEAR SAFETY RELATED PER IEEE-197. NOT IN SCOPE O ANSI N18.2 EXEMPT FROM ASME CODE STAMPING.
2. SEE M2-0215-1I FOR UNIT 2 DIESELS (CP2-MEDGE-01, -02).
3. ALL ITEMS MARKED * ARE SUPPLIED BY TRANSAMERICA DELAVAL.
4. SEE FORM CAT 123 FROM CP-9634-001A FOR VENDOR SUPPLIED MECHANICAL SYMBOLS.

EQUIPMENT SCHEDULE

MANUFACTURERS I D	TAG NO

FSAR FIGURE 9.5.5.4

DRAWING M1-0215 REV CP-11 HAS BEEN SPLIT INTO THE FOLLOWING SHEETS:

M1-0215
M1-0215-1H
M1-0215-2D
M1-0215-3
M1-0215-4I

CLASS I

(NUCLEAR SAFETY-RELATED)

SAFETY CLASS 1 SEISMIC CATEGORY I
SAFETY CLASS 2 QUALITY GROUP
SAFETY CLASS 3 ASSOCIATED CIRCUITS

TU ELECTRIC
CPSES
GLEN ROSE, TEXAS

FLOW DIAGRAM
JACKET WATER PIPING
CP1-MEDGE-01

DWG. NO.	SH. NO.	REV.
M1-0215	H	CP-10

DO NOT SCALE DRAWING FOR DIMENSIONS

REF: CECO CP-4 4 1 0 6

SHEET 1 OF 1

ma122300.dgn

M1-0215-H

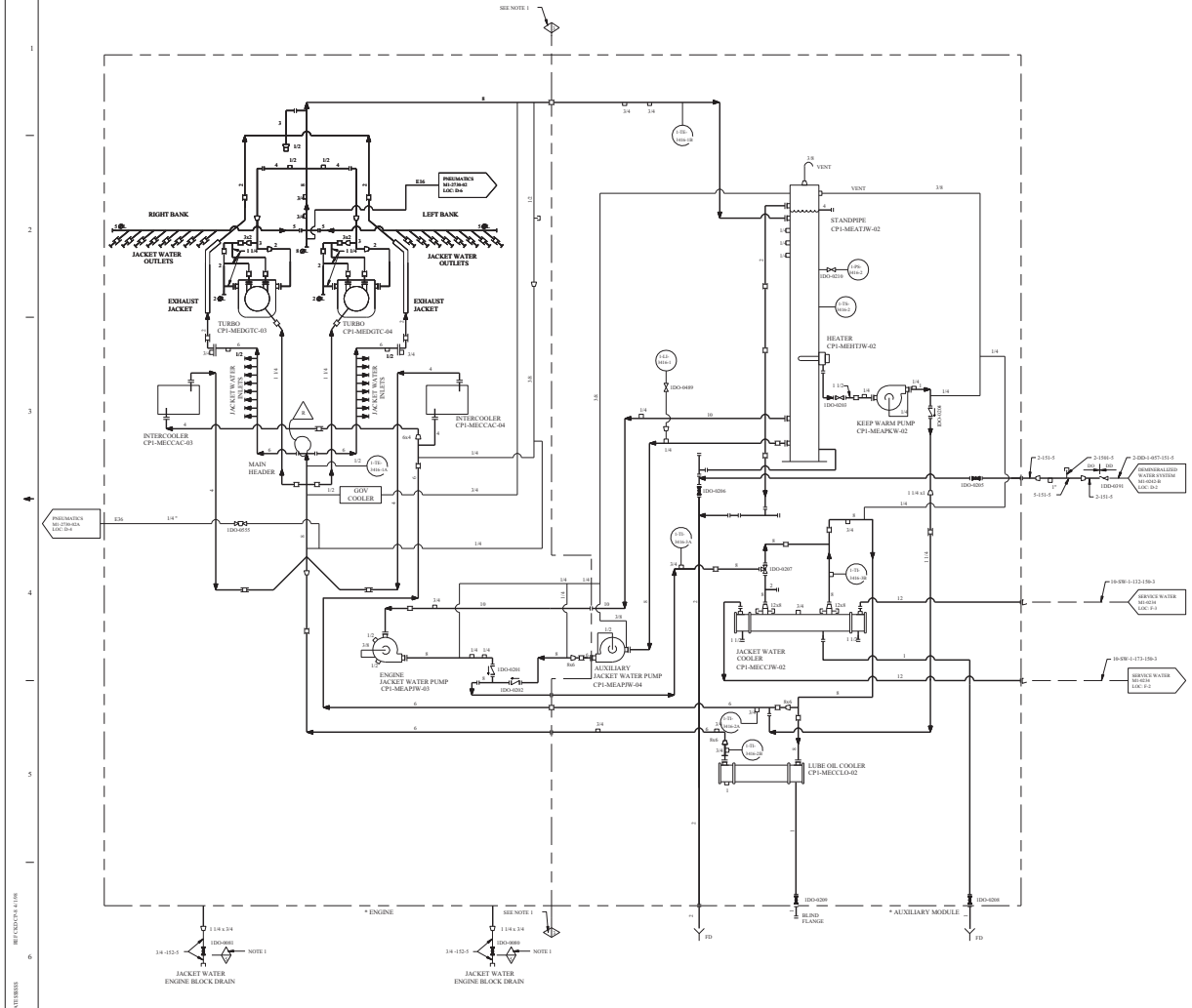

REV	DRWN	CHKD	APVD	REMARKS
CP-10	MAY 2001	MAY 2001		THIS DRAWING REVISED TO INCORPORATE DESIGN CHANGE FSK-2001-000103-01-00 PER SL-004135-01-000103-01-00.

LEGEND

- DRESSER COUPLING
- 1/2 COUPLING WITH PIPE PLUG

NOTES

1. NUCLEAR SAFETY RELATED PER IEEE-387. NOT IN SCOPE O ANSI N18.2 EXEMPT FROM ASME CODE STAMPING.
2. SEE M2-0215-J FOR UNIT 2 DIESELS (CP3-MEDGEE-01, -02).
3. ALL ITEMS MARKED * SUPPLIED BY TRANSAMERICA DELAVAL.
4. SEE FORM CAT 123 FROM CP-0634-001A FOR VENDOR SUPPLIED MECHANICAL SYMBOLS.

EQUIPMENT SCHEDULE

MANUFACTURERS I D	TAG NO

FSAR FIGURE 9.5.54

DRAWING M1-0215-A REV CP-6 HAS BEEN SPLIT INTO THE FOLLOWING SHEETS:

M1-0215-A
M1-0215-C
M1-0215-E
M1-0215-G
M1-0215-I

CLASS I

(NUCLEAR SAFETY-RELATED)
SAFETY CLASS 1 SEISMIC CATEGORY I
SAFETY CLASS 2 CLASS 1E
SAFETY CLASS 3 ASSOCIATED CIRCUITS

TU ELECTRIC
CPSES
GLEN ROSE, TEXAS

FLOW DIAGRAM
JACKET WATER PIPING
CP1-MEDGEE-02

DWG. NO.	SH. NO.	REV.
M1-0215	J	CP-10

M1-0215-J

DESIGNED AND DRAFTED BY STONE & WEBSTER ENGINEERING CORP.
BETH BOOKOUT 881010
REV. CKD. CP-6 4-1-96
ma1322400.dgn

REV	DWN	CHKD	APVD	REMARKS
CP-10	MHF 04-21 2017	MM 04-21 2017		THIS DRAWING REVISED TO INCORPORATE DESIGN CHANGE FDA-2017-000067-01-00 PER SK-0001-17-000067-01-00.

NOTES

1. NUCLEAR SAFETY RELATED PER IEEE-387. NOT IN SCOPE OF ANSI N18.2 EXEMPT FROM ASME CODE STAMPING.
2. SEE M1-0215 SH H AND SH J FOR UNIT 1 DIESELS (CP1-MEDGEE-01 AND CP1-MEDGEE-02).
3. ALL ITEMS MARKED * ARE SUPPLIED BY TRANSAMERICA DELAVAL.
4. SEE FORM CAT 123 FROM CP-0034-001A FOR VENDOR SUPPLIED MECHANICAL SYMBOLS.

LEGEND

- DRESSER COUPLING
- HALF COUPLING WITH PIPE PLUG

SEE NOTE 1

RIGHT BANK

LEFT BANK

JACKET WATER OUTLETS

EXHAUST JACKET

TURBO CP2-MEDGTC-01

TURBO CP2-MEDGTC-02

JACKET WATER INLETS

INTERCOOLER CP2-MECCAC-01

INTERCOOLER CP2-MECCAC-02

MAIN HEADER

GOV COOLER

2-TE-3415-1A

2-TI-3415

PNEUMATICS M2-2730-01A LOC: D-4

E36

2DO-0554

E16

PNEUMATICS M2-2730-01 LOC: C-6

2-TE-3415-1B

1□-152-3 VENT

STANDPIPE CP2-MEATJW-01

2DO-0110

2-PS-3415-2

2-TS-3415-2

HEATER CP2-MEHTJW-01

2-LI-3415-1

2DO-0518

2DO-0103

KEEP WARM PUMP CP2-MEAPKW-01

2DO-0104

2DO-0105

2DO-0106

2DO-0107

2-TI-3415-3A

2-TI-3415-3B

5-1501-5

2-1501-5

1-1501-5

2DD-0389

2-DD-2-121-151-5

DEMINERALIZED WATER SYSTEM M2-0242 LOC: E-6

10-SW-2-129-150-3

SERVICE WATER M2-0234 LOC: A-4

10-SW-2-102-150-3

SERVICE WATER M2-0234 LOC: A-6

ENGINE JACKET WATER PUMP CP2-MEAPJW-01

AUX JACKET WATER PUMP CP2-MEAPJW-02

2DO-0101

2DO-0102

JACKET WATER COOLER CP2-MECCJW-01

2SW-0425

2SW-0424

2-TI-3415-2A

2-TI-3415-2B

LUBE OIL COOLER CP2-MECLO-01

JACKET WATER OVERFLOW AND DRAIN

2DO-0109

2DO-0108

BLIND FLANGE

* AUXILIARY MODULE

2-152-G

1-152-G

FD

* ENGINE

JACKET WATER ENGINE BLOCK DRAIN

JACKET WATER ENGINE BLOCK DRAIN

2DO-0079

NOTE 1

SEE NOTE 1

1□" PLUG

EQUIPMENT SCHEDULE

MANUFACTURERS I D	TAG NO

FSAR FIGURE 9.5-54

THIS DRAWING CREATED ELECTRONICALLY

DRAWING 2323-M2-0215	REV CP-3
HAS BEEN SPLIT INTO THE FOLLOWING SHEETS:	
M2-0215	M2-0215-E
M2-0215-A	M2-0215-F
	M2-0215-G
	M2-0215-H
M2-0215-D	M2-0215-J

CLASS I

(NUCLEAR SAFETY-RELATED)

SAFETY CLASS 1	SEISMIC CATEGORY I
SAFETY CLASS 2	CLASS 1E
SAFETY CLASS 3	ASSOCIATED CIRCUITS

LUMINANT
CPNPP
GLEN ROSE, TEXAS

FLOW DIAGRAM
JACKET WATER PIPING
CP2-MEDGEE-01

DWG. NO. M2-0215 | SH. NO. H | REV. CP-10

FINAL PRINT

REF CKD 12/4/97 CP-4

me0000np.dgn M2-0215-H

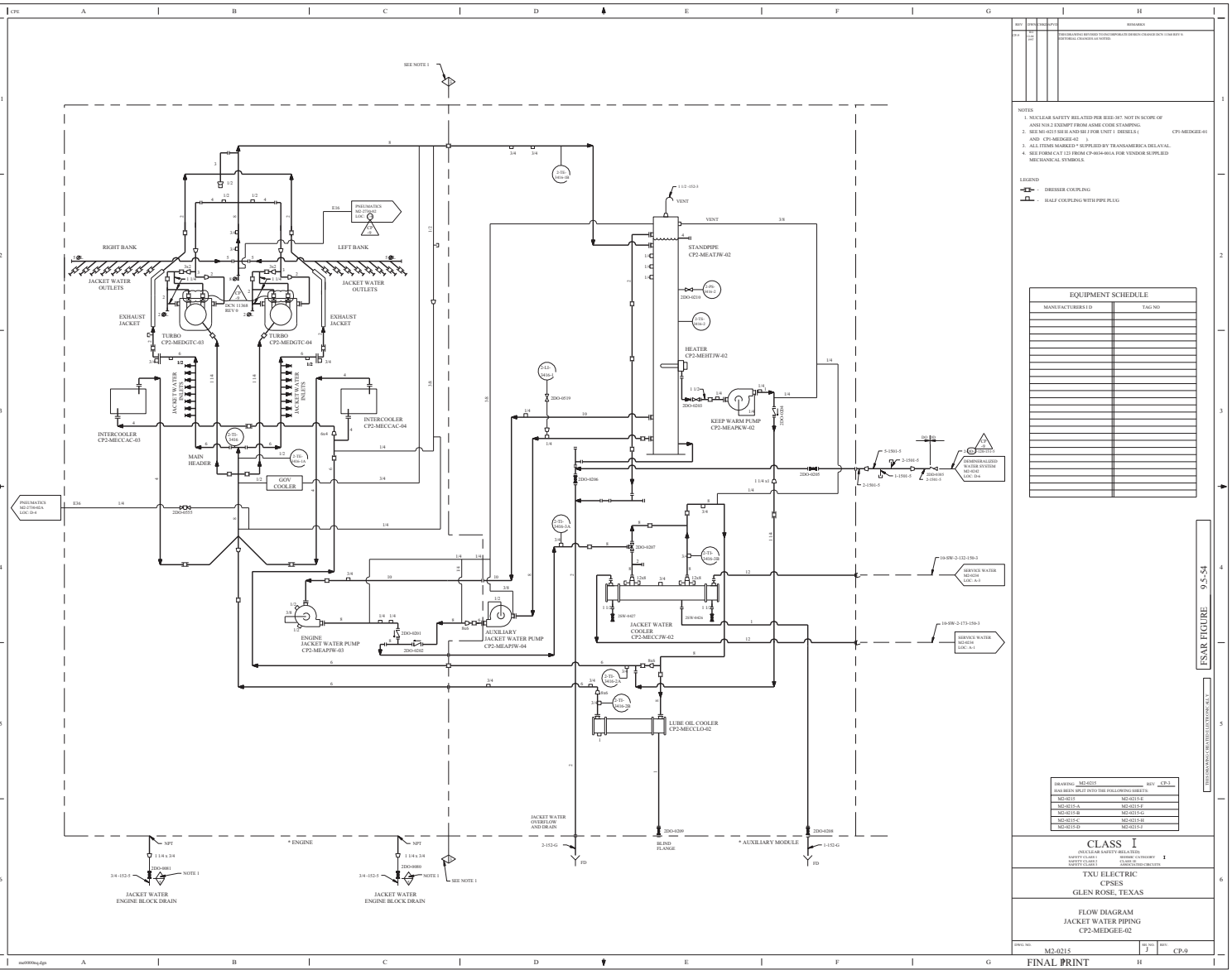

REV	DWG NO	SUPER	REMARKS
CP-9	M2-0215		THIS DRAWING REVISED TO INCORPORATE DESIGN CHANGE DCN 11364 REV 0. EDITORIAL CHANGES AS NOTED.

NOTES

1. NUCLEAR SAFETY RELATED PER IEEE-387. NOT IN SCOPE OF ANSI N18.2 EXEMPT FROM ASME CODE STAMPING.
2. SEE M2-0215 SH II AND SH J FOR UNIT 1 DIESELS (CP1-MEDGEE-01 AND CP1-MEDGEE-02).
3. ALL ITEMS MARKED * SUPPLIED BY TRANSAMERICA DELAVAL.
4. SEE FORM CAT 123 FROM CP-9034-001A FOR VENDOR SUPPLIED MECHANICAL SYMBOLS.

LEGEND

- DRESSER COUPLING
- HALF COUPLING WITH PIPE PLUG

EQUIPMENT SCHEDULE

MANUFACTURER'S I D	TAG NO

FSAR FIGURE 9.5-54

REFERENCE(S) ON SHEET(S) ELECTRONIC ACC'T

DRAWING M2-0215	REV CP-3
HAS BEEN SPLIT INTO THE FOLLOWING SHEETS:	
M2-0215	M2-0215-E
M2-0215-A	M2-0215-F
M2-0215-B	M2-0215-G
M2-0215-C	M2-0215-H
M2-0215-D	M2-0215-7

CLASS I
(NUCLEAR SAFETY-RELATED)
SAFETY CLASS 1 — SEISMIC CATEGORY I
SAFETY CLASS 2 — CLASS 1E
SAFETY CLASS 3 — VIBRATION CIRCUITS

TXU ELECTRIC
CPSES
GLEN ROSE, TEXAS

FLOW DIAGRAM
JACKET WATER PIPING
CP2-MEDGEE-02

DWG. NO.	SH. NO.	REV.
M2-0215	J	CP-9

FINAL PRINT

ma0006aq.dgn

REV	DWN	CHKD	APVD	REMARKS
CP-25	JRMC 06-26-2014	DJL 06-26-2014		THIS DRAWING REVISED TO INCORPORATE DESIGN CHANGE FDA-2014-000145-01-00 PER SK-0001-14-000145-01-00.

NOTES:

1. NUCLEAR SAFETY RELATED PER IEEE-337, NOT IN SCOPE OF ANSI N18.2 EXEMPT FROM ASME CODE STAMPING.
2. SEE M2-0215 SH D FOR UNIT 2 DIESELS (CP2-MEDGEE-01 AND CP2-MEDGEE-02).
3. ALL ITEMS MARKED * ARE SUPPLIED BY DELAVAL.
4. SEE M1-2730-01, -01A,-02 AND -02A FOR PNEUMATIC CONTROL SCHEMATIC.
5. NON-NUCLEAR SAFETY CLASS TUBING INSTALLED PER SPEC CPES-I-1018.
6. FLANGE RATING SUPPLIED BY DIESEL GENERATOR MANUFACTURER.
7. ALL DRAINS ARE □* UNLESS OTHERWISE NOTED.
8. SEE FORM CAT-123 FROM CP-0034-0014 FOR VENDOR SUPPLIED MECHANICAL SYMBOLS.
9. REVERSE VALVE POSITION TO MANUALLY UNLOAD COMPRESSOR LP CYLINDERS.
10. VALVE POSITIONS AND FLOW DIRECTION SHOWN FOR LEFT CHAMBER DRYING AND RIGHT CHAMBER REGENERATION.
11. FLOW SCHEMATIC FOR SOLENOID VALVE:

DE-ENERGIZED / ENERGIZED — A: PRESSURE, B: VENT, C: CYLINDER

12. MOISTURE INDICATOR ABANDONED IN PLACE.

EQUIPMENT SCHEDULE

MANUFACTURERS I D	TAG NUMBER

DRAWING M1-0215 REV CP-11 HAS BEEN SPLIT INTO THE FOLLOWING SHEETS:

M1-0215
M1-0215-B
M1-0215-D
M1-0215-F
M1-0215-H

CLASS I (NUCLEAR SAFETY-RELATED)

SAFETY CLASS 1, SAFETY CLASS 2, SAFETY CLASS 3 — SEISMIC CATEGORY I, CLASS 1E, ASSOCIATED CIRCUITS

LUMINANT
CPNPP
GLEN ROSE, TEXAS

FLOW DIAGRAM
STARTING AIR PIPING
CP1-MEDGEE-01

DWG NO. M1-0215 | SH. NO. D | REV. CP-25

FSAR FIGURE 9.5-55

THIS DRAWING CREATED ELECTRONICALLY

REF CKD 9/23/97 CP-18

$$$$$$$$DATE$$$$$$

me858200.dgn A M1-0215-D

< FINAL PRINT >

REV	DWN	CHKD	APVD	REMARKS
CP-27	JESC 06-26-2014	DJL 06-26-2014		THIS DRAWING REVISED TO INCORPORATE DESIGN CHANGE FDA-2014-000145-01-00 PER SK-0002-14-000145-01-00.

NOTES:

1. NUCLEAR SAFETY RELATED PER IEEE-337, NOT IN SCOPE OF ANSI N18.2 EXEMPT FROM ASME CODE STAMPING.
2. SEE M2-0215 SH E FOR UNIT 2 DIESELS (CP2-MEDGEE-01 AND CP2-MEDGEE-02).
3. ALL ITEMS MARKED * ARE SUPPLIED BY DELAVAL.
4. SEE M1-2730-01, -01A, -02 AND -02A FOR PNEUMATIC CONTROL SCHEMATIC.
5. NON-NUCLEAR SAFETY CLASS TUBING INSTALLED PER SPEC CPES-1-1018.
6. ** - 300 LB RF FLANGE RATING TO MATERIAL WITH COMPONENT FLANGE RATING SUPPLIED BY DIESEL GENERATOR MANUFACTURER.
7. ALL DRAINS ARE □" UNLESS OTHERWISE NOTED.
8. SEE FORM CAT-123 FROM CP-0034-0014 FOR VENDOR SUPPLIED MECHANICAL SYMBOLS.
9. REVERSE VALVE POSITION TO MANUALLY UNLOAD COMPRESSOR LP CYLINDERS.
10. VALVE POSITIONS AND FLOW DIRECTION SHOWN FOR LEFT CHAMBER DRYING AND RIGHT CHAMBER REGENERATION.
11. FLOW SCHEMATIC FOR SOLENOID VALVE:

DE-ENERGIZED: C, A, B — ENERGIZED: C, A, B — A: PRESSURE, B: VENT, C: CYLINDER

12. MOISTURE INDICATOR ABANDONED IN PLACE.

EQUIPMENT SCHEDULE

MANUFACTURERS I D	TAG NO

DRAWING M1-0215-A REV CP-6 HAS BEEN SPLIT INTO THE FOLLOWING SHEETS:

M1-0215-A
M1-0215-C
M1-0215-E
M1-0215-G
M1-0215-J

CLASS I (NUCLEAR SAFETY-RELATED)

SAFETY CLASS 1, SAFETY CLASS 2, SAFETY CLASS 3 — SEISMIC CATEGORY I, CLASS 1E ASSOCIATED CIRCUITS

LUMINANT
CPNPP
GLEN ROSE, TEXAS

FLOW DIAGRAM
STARTING AIR PIPING
CP1-MEDGEE-02

DWG. NO. M1-0215 | SH. NO. E | REV. CP-27

FSAR FIGURE 9.5-55

THIS DRAWING CREATED ELECTRONICALLY

$$$$$$$DATE$$$$$$ REF CKD 9/23/97 CP-20

me858300.dgn A M1-0215-E

< FINAL PRINT >

REV	DWN	CHKD	APVD	REMARKS
CP-17	JRMC 06-26-2014	DJL 06-26-2014		THIS DRAWING REVISED TO INCORPORATE DESIGN CHANGE FDA-2014-000145-01-00 PER SK-0003-14-000145-01-00.

NOTES:

NUCLEAR SAFETY RELATED PER IEEE-337, NOT IN SCOPE OF ANSI N18.2 EXEMPT FROM ASME CODE STAMPING.

2. SEE M1-0215 SH D AND SH E FOR UNIT 1 DIESELS (CP1-MEDGEE-01 AND CP1-MEDGEE-02).
3. ALL ITEMS MARKED * ARE SUPPLIED BY DELAVAL.
4. SEE M2-2730-01,-01A,-02 AND -02A FOR PNEUMATIC CONTROL SCHEMATIC.
5. NON-NUCLEAR SAFETY CLASS TUBING INSTALLED PER SPEC CPES-1-1018.
6. ** -300 LB RF FLANGE RATING TO MATCH WITH COMPONENT FLANGE RATING SUPPLIED BY DIESEL GENERATOR MANUFACTURER.
7. ALL DRAINS ARE □" UNLESS OTHERWISE NOTED.
8. SEE FORM CAT-123 FROM CP-0034-0014 FOR VENDOR SUPPLIED MECHANICAL SYMBOLS.
9. VALVE POSITIONS AND FLOW DIRECTION SHOWN FOR LEFT CHAMBER DRYING AND RIGHT CHAMBER REGENERATION.
10. REVERSE VALVE POSITION TO MANUALLY UNLOAD COMPRESSOR LP CYLINDERS.
11. FLOW SCHEMATIC FOR SOLENOID VALVE:

DE-ENERGIZED C B A — ENERGIZED C B A — A: PRESSURE B: VENT C: CYLINDER

12. MOISTURE INDICATOR ABANDONED IN PLACE.

EQUIPMENT SCHEDULE

MANUFACTURERS I D	TAG NUMBER
76001-146	2DO-0135 (137)
76001-126	CP2-MECAAC-01 (02)
76001-153	2DO-0145 (142)

DRAWING 2323-M2-0215 REV CP-3
HAS BEEN SPLIT INTO THE FOLLOWING SHEETS:

M2-0215	M2-0215-E
M2-0215-A	M2-0215-F
M2-0215-B	M2-0215-G
M2-0215-C	M2-0215-H
M2-0215-D	M2-0215-J

CLASS I
(NUCLEAR SAFETY-RELATED)
SAFETY CLASS 1 — SEISMIC CATEGORY I
SAFETY CLASS 2 — CLASS 1E
SAFETY CLASS 3 — ASSOCIATED CIRCUITS

LUMINANT
CPNPP
GLEN ROSE, TEXAS

FLOW DIAGRAM
STARTING AIR PIPING
CP2-MEDGEE-01

DWG. NO. M2-0215 | SH. NO. D | REV. CP-17

FSAR FIGURE 9.5-55

THIS DRAWING CREATED ELECTRONICALLY

SSSSSSSDATESSSSSS REF CKD CP-12 9/26/97

me858400.dgn A M2-0215-D B C D E F G < FINAL PRINT > H

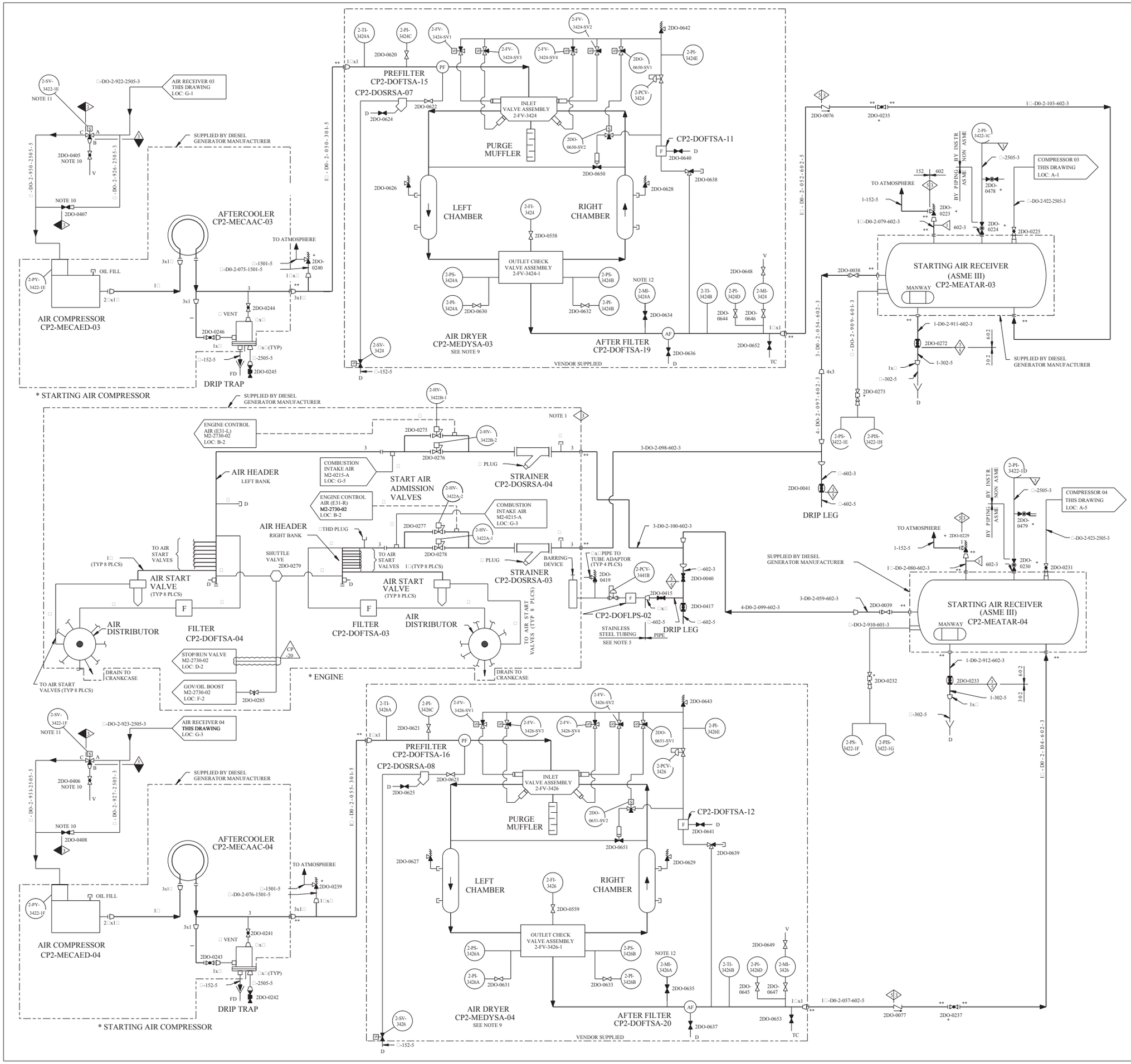

REV	DWN	CHKD	APVD	REMARKS
CP-20	DLK 03-23 2015			THIS DRAWING REVISED TO INCORPORATE AI-CR-2015-002427-1 TO EDITORIALLY RECONNECT REFERENCE BLOCK TO INSTRUMENT LINE THAT WAS DELETED BY MISTAKE.

NOTES:

1. NUCLEAR SAFETY RELATED PER IEEE-337, NOT IN SCOPE OF ANSI N18.2 EXEMPT FROM ASME CODE STAMPING.
2. SEE M1-0215 SH E AND SH F FOR UNIT 1 DIESELS (CP1-MEDGEE-01 AND CP1-MEDGEE-02).
3. ALL ITEMS MARKED * ARE SUPPLIED BY DELAVAL.
4. SEE M2-2730-01, -01A, -02 AND -02A FOR PNEUMATIC CONTROL SCHEMATIC.
5. NON-NUCLEAR SAFETY CLASS TUBING INSTALLED PER SPEC CPES-I-1018.
6. ** - 300 LB RF FLANGE RATING TO MATCH WITH COMPONENT FLANGE RATING SUPPLIED BY DIESEL GENERATOR MANUFACTURER.
7. ALL DRAINS ARE □* UNLESS OTHERWISE NOTED.
8. SEE FORM CAT-123 FROM CP-0034-0014 FOR VENDOR SUPPLIED MECHANICAL SYMBOLS.
9. VALVE POSITIONS AND FLOW DIRECTION SHOWN FOR LEFT CHAMBER DRYING AND RIGHT CHAMBER REGENERATION.
10. REVERSE VALVE POSITION TO MANUALLY UNLOAD COMPRESSOR LP CYLINDERS.
11. FLOW SCHEMATIC FOR SOLENOID VALVE:

DE-ENERGIZED C B A — ENERGIZED C B A

A: PRESSURE
B: VENT
C: CYLINDER

12. MOISTURE INDICATOR ABANDONED IN PLACE.

EQUIPMENT SCHEDULE

MANUFACTURERS I D	TAG NO

FSAR FIGURE 9.5-55

THIS DRAWING CREATED ELECTRONICALLY

DRAWING 2323-M2-0215 REV CP-3
HAS BEEN SPLIT INTO THE FOLLOWING SHEETS:

M2-0215	M2-0215-E
M2-0215-A	M2-0215-F
M2-0215-B	M2-0215-G
M2-0215-C	M2-0215-H
M2-0215-D	M2-0215-J

CLASS I
(NUCLEAR SAFETY-RELATED)
SAFETY CLASS 1 / SAFETY CLASS 2 / SAFETY CLASS 3 — SEISMIC CATEGORY I / CLASS 1E / ASSOCIATED CIRCUITS

LUMINANT
CPNPP
GLEN ROSE, TEXAS

FLOW DIAGRAM
STARTING AIR PIPING
CP2-MEDGEE-02

DWG. NO. M2-0215 | SH. NO. E | REV. CP-20

REF CKD CP-14 9/26/97

me858500.dgn M2-0215-E

< FINAL PRINT >

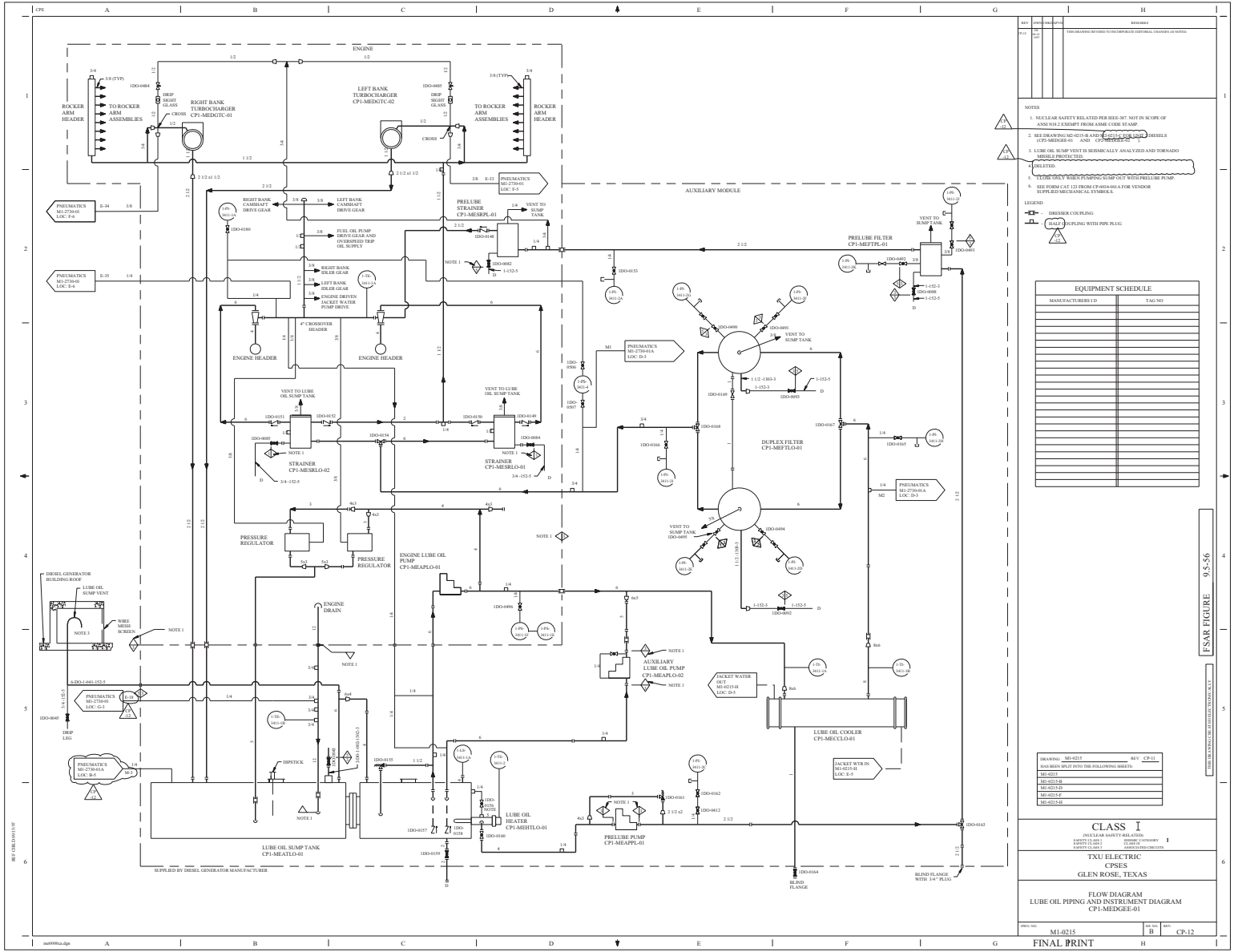

REV	DWN	CHK	APP'D	REMARKS
10-11	Not Used			THIS DRAWING REVISED TO INCORPORATE EDITORIAL CHANGES AS NOTED.

NOTES

1. NUCLEAR SAFETY RELATED PER REE-307. NOT IN SCOPE OF ANSI N18.2 EXEMPT FROM ASME CODE STAMP.
2. SEE DRAWING M2-0215-B AND M2-0215-D FOR UNIT DIESELS (CP2-MEDGEE-01 AND CP2-MEDGEE-02).
3. LUBE OIL SUMP VENT IS SEISMICALLY ANALYZED AND TORNADO MISSILE PROTECTED.
4. DELETED.
5. CLOSE ONLY WHEN PUMPING SUMP OUT WITH PRELUBE PUMP.
6. SEE FORM CAT 123 FROM CP-0034-001A FOR VENDOR SUPPLIED MECHANICAL SYMBOLS.

LEGEND

DRESSER COUPLING

HALF COUPLING WITH PIPE PLUG

EQUIPMENT SCHEDULE

MANUFACTURERS I D	TAG NO

FSAR FIGURE 9.5-56

DRAWING	M1-0215	REV	CP-11
HAS BEEN SPLIT INTO THE FOLLOWING SHEETS.			
M1-0215			
M1-0215-B			
M1-0215-D			
M1-0215-F			
M1-0215-H			

CLASS I
(NUCLEAR SAFETY-RELATED)
SAFETY CLASS 1 SEISMIC CATEGORY I
SAFETY CLASS 2 CLASS 1E
SAFETY CLASS 3 ARMATURE CIRCUITS

TXU ELECTRIC
CPSES
GLEN ROSE, TEXAS

FLOW DIAGRAM
LUBE OIL PIPING AND INSTRUMENT DIAGRAM
CP1-MEDGEE-01

DRG. NO.	REV. NO.	REV.
M1-0215	B	CP-12

FINAL PRINT

REF DGN D:\915.0*

ma0006ca.dgn

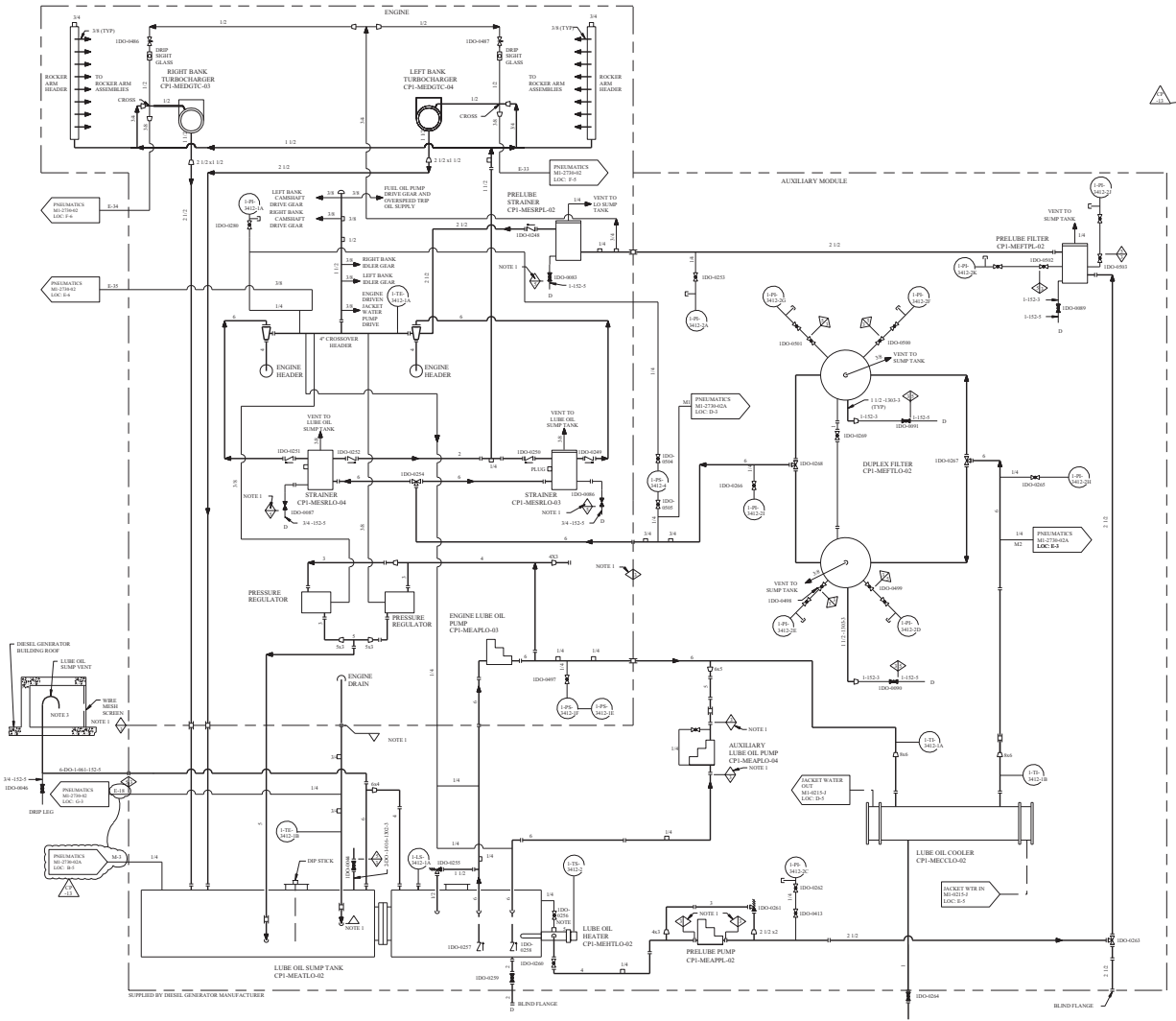

REV	DWN	CHKD	APVD	REMARKS
9.15	09.15			THIS DRAWING REVISED TO INCORPORATE EDITORIAL CHANGES AS NOTED

NOTES

1. NUCLEAR SAFETY RELATED PER IEEE-387 NOT IN SCOPE OF ANSI N18.2 EXEMPT FROM ASME CODE STAMP.
2. SEE DRAWING M1-0215-B AND M2-0215-C FOR UNIT 2 DIESELS (CP2-MEDGEE-01 AND CP2-MEDGEE-02).
3. LUBE OIL SUMP VENT IS SEISMICALLY ANALYZED AND TORNADO MISSILE PROTECTED.
4. DELETED.
5. CLOSE ONLY WHEN PUMPING SUMP OUT WITH PRELUBE PUMP.
6. SEE FORM CAT 123 FROM CP-0034-001A FOR VENDOR SUPPLIED MECHANICAL SYMBOLS.

LEGEND

- DRESSER COUPLING
- HALF COUPLING WITH PIPE PLUG

EQUIPMENT SCHEDULE

MANUFACTURERS I D	TAG NO

FSAR FIGURE 9.5-56

THIS DRAWING CHECKED ELECTRONICALLY

DRAWING M1-0215-A	REV CP-6
HAS BEEN SPLIT INTO THE FOLLOWING SHEETS:	
M1-0215-A	
M1-0215-C	
M1-0215-E	
M1-0215-G	
M1-0215-J	

CLASS I
(NUCLEAR SAFETY RELATED)
SAFETY CLASS 1 SEISMIC CATEGORY I
SAFETY CLASS 2 CLASS 1E
SAFETY CLASS 3 ASSOCIATED CIRCUITS

TU ELECTRIC
CPSES
GLEN ROSE, TEXAS

FLOW DIAGRAM
LUBE OIL PIPING AND INSTRUMENT DIAGRAM
CP1-MEDGEE-02

DWG. NO. M1-0215 | SH. NO. C | REV. CP-13

FINAL PRINT

m0000cd.dgn

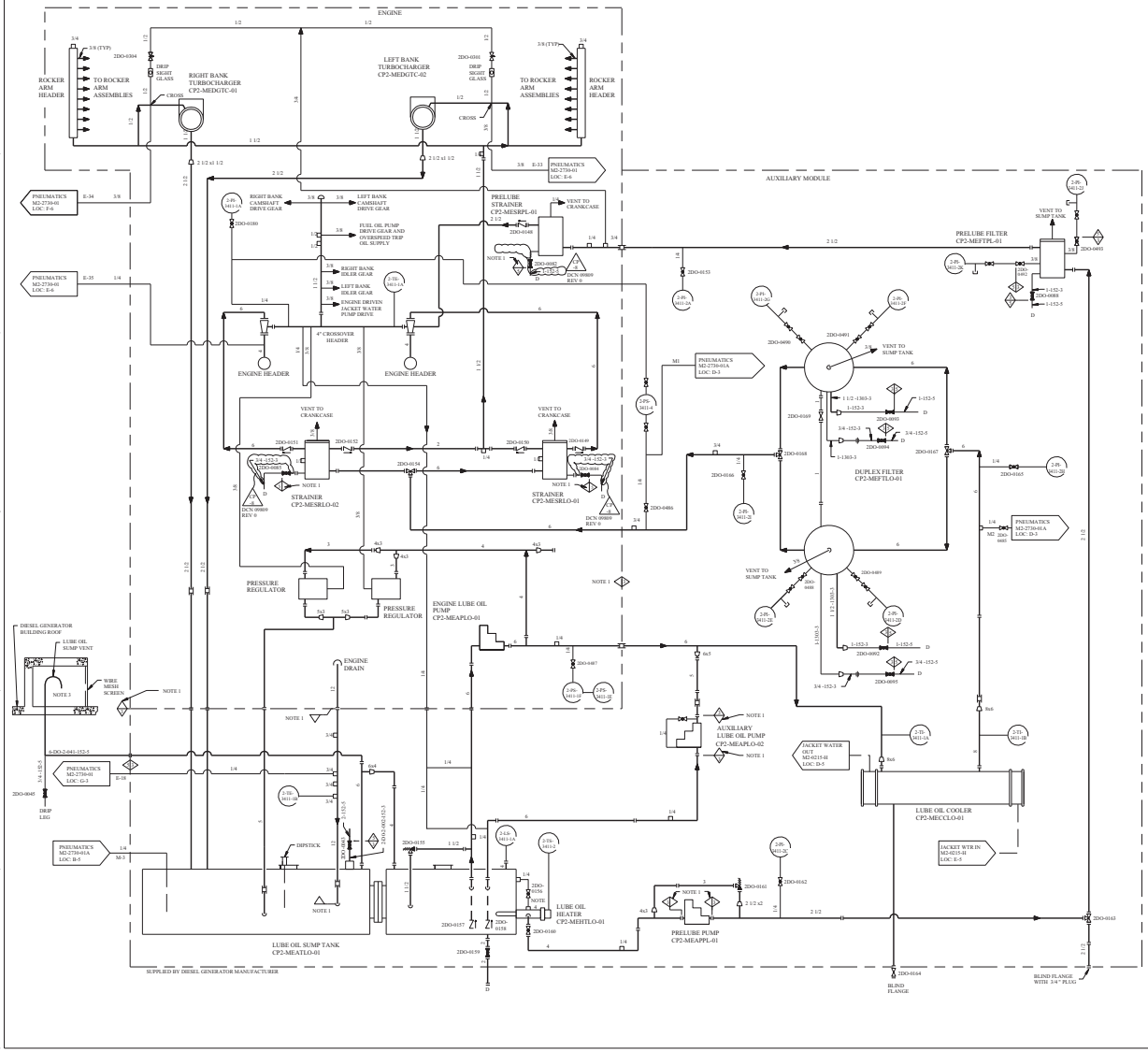

REV	DWN	CHK	APVD	REMARKS
CP-8	RC			THIS DRAWING REVISED TO INCORPORATE DESIGN CHANGE DCN 09809 REV 0.

NOTES

1. NUCLEAR SAFETY RELATED PER IEEE-387. NOT IN SCOPE OF ANSI N18.2 EXEMPT FROM ASME CODE STAMP.
2. SEE DRAWING M1-0215-B AND -C FOR UNIT 1 DIESELS (CP1-MEDGEE-01 AND CP1-MEDGEE-02)
3. LUBE OIL SUMP VENT IS SEISMICALLY ANALYZED AND TORNADO MISSILE PROTECTED.
4. CLOSE ONLY WHEN PUMPING SUMP OUT WITH PRELUBE PUMP.
5. SEE FORM CAT 123 FROM CP-0034-001A FOR VENDOR SUPPLIED MECHANICAL SYMBOLS.

LEGEND

- DRESSER COUPLING
- HALF COUPLING WITH PIPE PLUG

EQUIPMENT SCHEDULE

MANUFACTURERS I D	TAG NO

FSAR FIGURE 9.5-56

THIS DRAWING CREATED ELECTRONICALLY

DRAWING 2323-M2-0215	REV CP-3
HAS BEEN SPLIT INTO THE FOLLOWING SHEETS:	
M2-0215	M2-0215-E
M2-0215-A	M2-0215-F
M2-0215-B	M2-0215-G
M2-0215-C	M2-0215-H
M2-0215-D	M2-0215-J

CLASS I

(NUCLEAR SAFETY RELATED)

SAFETY CLASS 1 SEISMIC CATEGORY I
SAFETY CLASS 2 CLASS 1E
SAFETY CLASS 3 ASSOCIATED CIRCUITS

TXU ELECTRIC
CPSES
GLEN ROSE, TEXAS

FLOW DIAGRAM
LUBE OIL PIPING AND INSTRUMENT DIAGRAM
CP2-MEDGEE-01

DWG. NO. M2-0215 | SIZE NO. B | REV. CP-8

FINAL PRINT

ma00001b.dgn

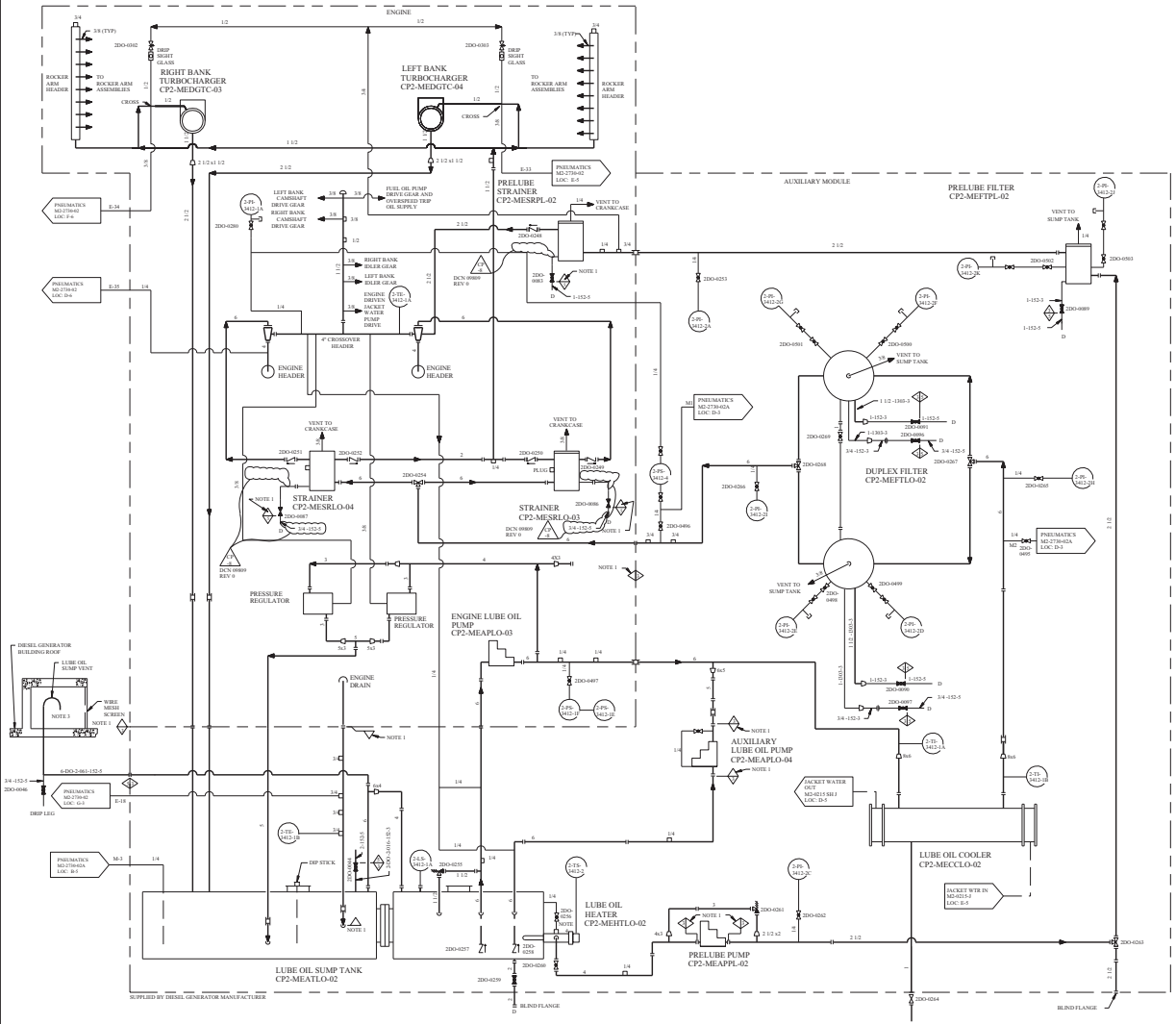

REV.	DWN	CHKD	APVD	REMARKS
CP-8				THIS DRAWING REVISED TO INCORPORATE DESIGN CHANGE DCN 98809 REV 0.

NOTES
1. NUCLEAR SAFETY RELATED PER IEEE-387 NOT IN SCOPE OF ANSI/N18.2 EXEMPT FROM ASME CODE STAMP.
2. SEE DRAWING M1-0215-B AND -C FOR UNIT 1 DIESELS (CP1-MEDGEE-01 AND CP1-MEDGEE-02)
3. LUBE OIL SUMP VENT IS SEISMICALLY ANALYZED AND TORNADO MISSILE PROTECTED.
4. CLOSE ONLY WHEN PUMPING SUMP OUT WITH PRELUBE PUMP.
5. SEE FORM CAT 123 FROM CP-0034-001A FOR VENDOR SUPPLIED MECHANICAL SYMBOLS.

LEGEND
- DRESSER COUPLING
- HALF COUPLING WITH PIPE PLUG

EQUIPMENT SCHEDULE

MANUFACTURERS I D	TAG NO

FSAR FIGURE 9.5-56

THIS DRAWING IS AFFECTED BY CONCAT XY

DRAWING 2323-M2-0215 REV CP-3 HAS BEEN SPLIT INTO THE FOLLOWING SHEETS:

M2-0215	M2-0215-E
M2-0215-A	M2-0215-F
M2-0215-B	M2-0215-G
M2-0215-C	M2-0215-H
M2-0215-D	M2-0215-J

CLASS I
(NUCLEAR SAFETY-RELATED)
SAFETY CLASS 1 SECONDARY
SAFETY CLASS 2 TR
SAFETY CLASS 3 SEPARATED CIRCUITS

TXU ELECTRIC
CPSES
GLEN ROSE, TEXAS

FLOW DIAGRAM
LUBE OIL PIPING AND INSTRUMENT DIAGRAM
CP2-MEDGEE-02

DWG. NO.	SH. NO.	REV.
M2-0215	C	CP-8

FINAL PRINT

ma000001.dgn

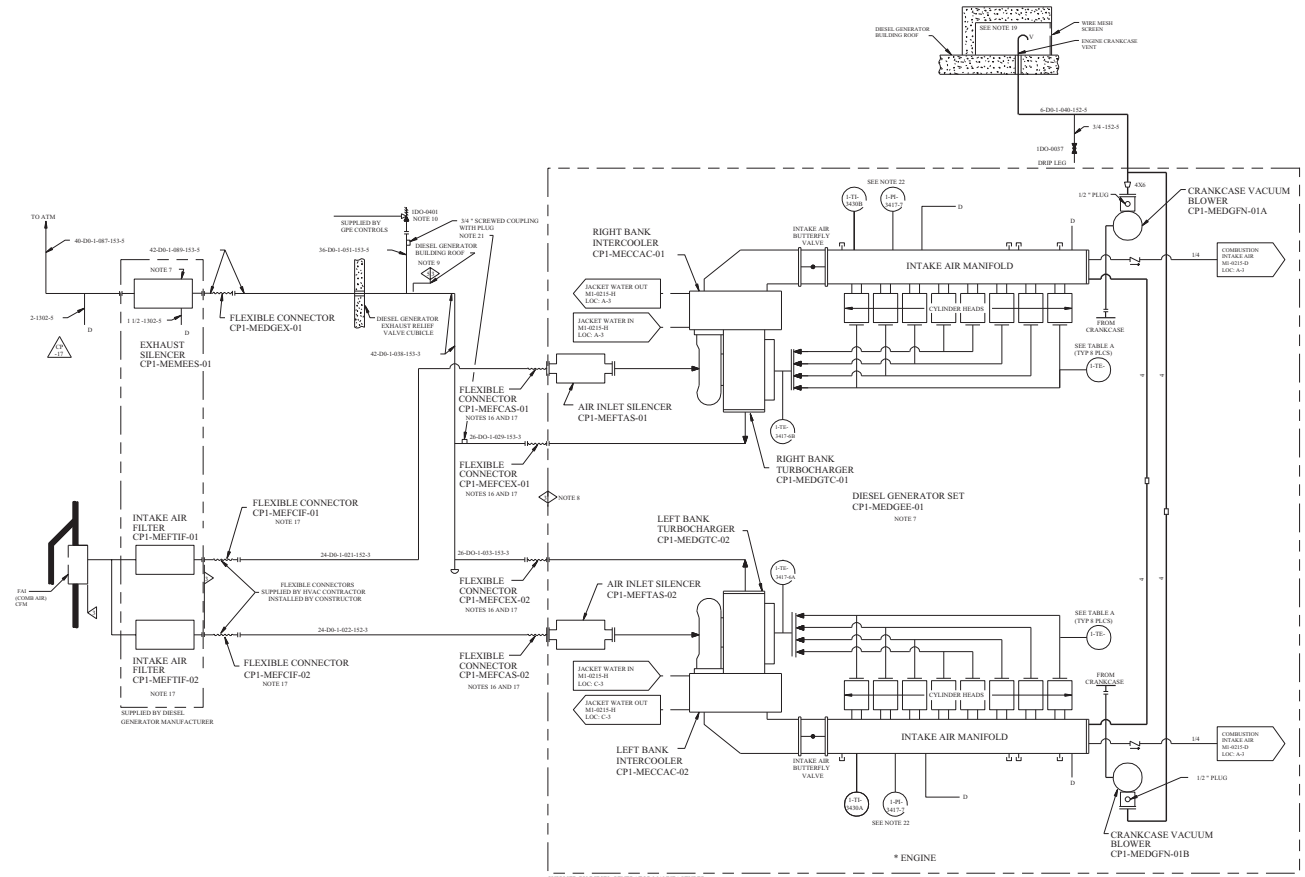

REV	DWN/CHK/APV'D	REMARKS
CP-18	RLW 8/31/2000	THIS DRAWING REVISED TO INCORPORATE FSA-2000-000001-01-00 AND ML-0001-00-000001-01-00.

NOTES:

1. ALL DRAINS ARE 3/4 " UNLESS OTHERWISE NOTED.
2. DELETED
3. ITEMS MARKED BY * ARE SUPPLIED BY TRANSAMERICA DELAVAL.
4. INSTRUMENTATION CONTROLS PROVIDED BY DIESEL GENERATOR MANUFACTURER ARE NOT SHOWN ON THIS DRAWING.
5. DELETED
6. DELETED
7. SEISMIC CATEGORY 1.
8. NUCLEAR SAFETY RELATED PER IEEE-387, NOT IN SCOPE OF ANSI N18.2.
9. EXHAUST PIPING AND SILENCER MOUNTED ON ROOF ARE SEISMICALLY ANALYZED.
10. RELIEF VALVE IS NON-SEISMIC, NON-NUCLEAR SAFETY RELATED, BUT VALVE AND UPSTREAM PIPING SHALL BE TORNADO MISSILE PROTECTED.
11. DELETED
12. DELETED
13. DELETED
14. DELETED
15. DELETED
16. SUPPLIED BY DIESEL GENERATOR MANUFACTURER.
17. EQUIPMENT IS SAFETY CLASS 3, NON-ASME.
18. DELETED
19. ENGINE CRANKCASE AND LUBE OIL SUMP VENTS ARE SEISMICALLY ANALYZED AND TORNADO MISSILE PROTECTED.
20. DELETED
21. THREADED TAPS ADDED FOR TESTING OF 1DO-0401 .
22. 1-PI-3417-7 HAS SEPARATE TAPS FOR BOTH THE RIGHT BANK AND THE LEFT BANK (REF DWG M1-2730 SH 01A).

LEGEND:

- DRESSER COUPLING
- 1/2 COUPLING WITH PIPE PLUG

TABLE A	
CYLINDER NO	INSTR TAG NO
1L	1-TE-3417-5A
2L	1-TE-3417-5B
3L	1-TE-3417-5C
4L	1-TE-3417-5D
5L	1-TE-3417-5E
6L	1-TE-3417-5F
7L	1-TE-3417-5G
8L	1-TE-3417-5H
1R	1-TE-3417-5I
2R	1-TE-3417-5J
3R	1-TE-3417-5K
4R	1-TE-3417-5L
5R	1-TE-3417-5M
6R	1-TE-3417-5N
7R	1-TE-3417-5P
8R	1-TE-3417-5Q

EQUIPMENT SCHEDULE	
MANUFACTURERS I D	TAG NO

FSAR FIGURE 9.5.5-7

THIS DRAWING CREATED ELECTRONICALLY

DRAWING M1-0215 REV CP-11 HAS BEEN SPLIT INTO THE FOLLOWING SHEETS:
M1-0215
M1-0215-B
M1-0215-D
M1-0215-F
M1-0215-H

DRAWING 2323-M1-0215 REV CP-5 HAS BEEN SPLIT INTO THE FOLLOWING SHEETS:
M1-0215
M1-0215-A

CLASS 1
(NUCLEAR SAFETY-RELATED)
SAFETY CLASS 1 SEISMIC CATEGORY 1
SAFETY CLASS 1 CLASS 1E
SAFETY CLASS 3 ASSOCIATED CIRCUITS

TXU ELECTRIC
CPSES
GLEN ROSE, TEXAS

FLOW DIAGRAM
AIR INTAKE AND EXHAUST SYSTEM
CP1-MEDGEE-01

DWG NO	SH NO	REV
M1-0215	-	CP-18

FINAL PRINT

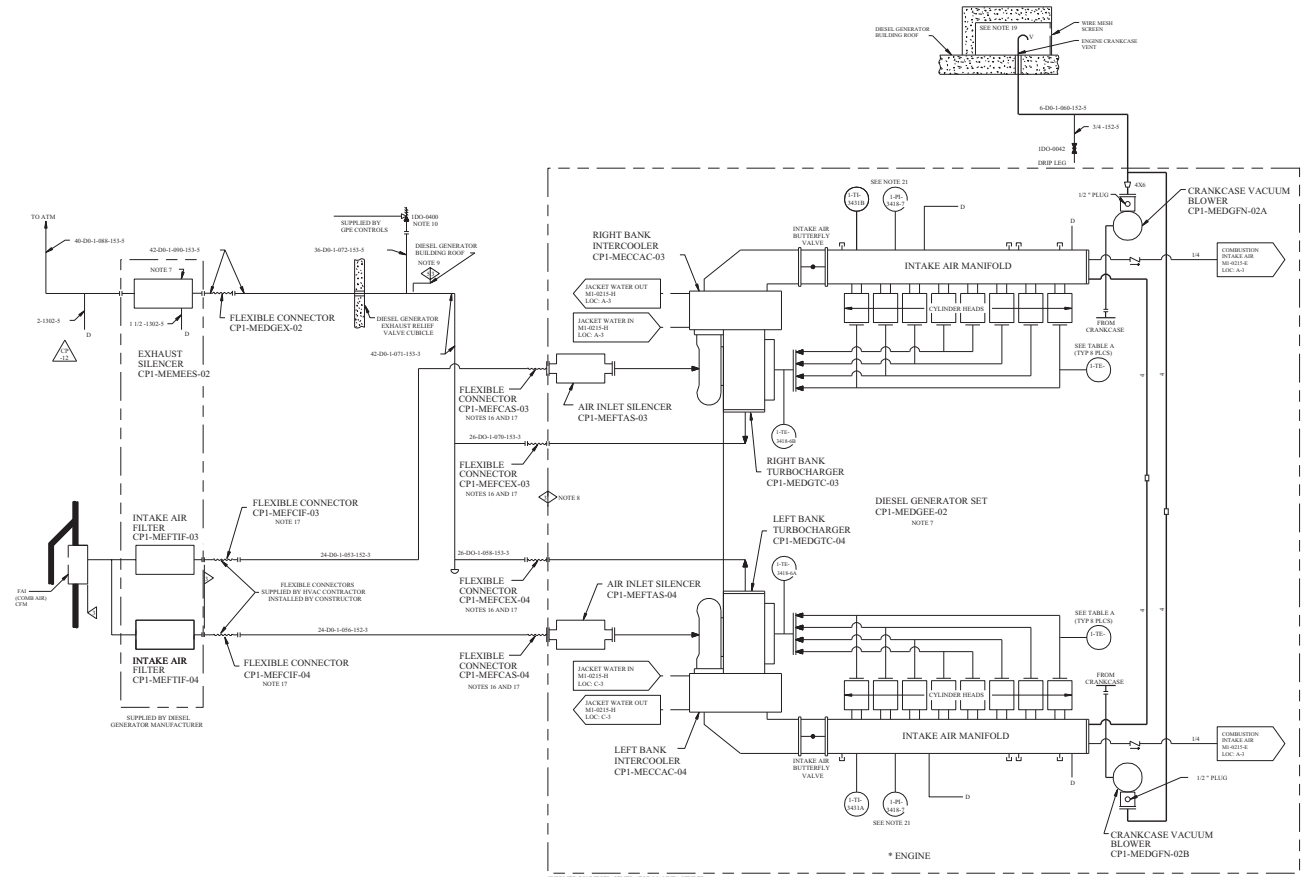

TABLE A	
CYLINDER NO	INSTR TAG NO
1L	1-TE-3418-5A
2L	1-TE-3418-5B
3L	1-TE-3418-5C
4L	1-TE-3418-5D
5L	1-TE-3418-5E
6L	1-TE-3418-5F
7L	1-TE-3418-5G
8L	1-TE-3418-5H
1R	1-TE-3418-5I
2R	1-TE-3418-5J
3R	1-TE-3418-5K
4R	1-TE-3418-5L
5R	1-TE-3418-5M
6R	1-TE-3418-5N
7R	1-TE-3418-5P
8R	1-TE-3418-5Q

REV	DWN	CHK	APVD	REMARKS
CP-13	RAS 2000			THIS DRAWING REVISED TO INCORPORATE FDA-2000-00-000001-01-00 AND SIL-0002-00-000301-01-00.

NOTES:

1. ALL DRAINS ARE 3/4 " UNLESS OTHERWISE NOTED.
2. DELETED
3. ITEMS MARKED BY * ARE SUPPLIED BY TRANSAMERICA DELAVAL.
4. INSTRUMENTATION CONTROLS PROVIDED BY DIESEL GENERATOR MANUFACTURER ARE NOT SHOWN ON THIS DRAWING.
5. DELETED
6. DELETED
7. SEISMIC CATEGORY 1.
8. NUCLEAR SAFETY RELATED PER IEEE-387, NOT IN SCOPE OF ANSI N18.2.
9. EXHAUST PIPING AND SILENCER MOUNTED ON ROOF ARE SEISMICALLY ANALYZED.
10. RELIEF VALVE IS NON-SEISMIC, NON-NUCLEAR SAFETY RELATED, BUT VALVE AND UPSTREAM PIPING SHALL BE TORNADO MISSILE PROTECTED.
11. DELETED
12. DELETED
13. DELETED
14. DELETED
15. DELETED
16. SUPPLIED BY DIESEL GENERATOR MANUFACTURER.
17. EQUIPMENT IS SAFETY CLASS 3, NON-ASME.
18. DELETED
19. ENGINE CRANKCASE AND LUBE OIL SUMP VENTS ARE SEISMICALLY ANALYZED AND TORNADO MISSILE PROTECTED.
20. DELETED
21. 1-PI-3418-7 HAS SEPARATE TAPS FOR BOTH THE RIGHT BANK AND THE LEFT BANK. (REF M1-2730 SH 02A).

LEGEND

- DRESSER COUPLING
- 1/2 COUPLING WITH PIPE PLUG

EQUIPMENT SCHEDULE	
MANUFACTURERS I.D.	TAG NO.

FSAR FIGURE 9.5-57

THIS DRAWING CREATED ELECTRONICALLY

DRAWING M1-0215-A REV CP-6 HAS BEEN SPLIT INTO THE FOLLOWING SHEETS:
M1-0215-A
M1-0215-C
M1-0215-E
M1-0215-G
M1-0215-I

DRAWING 2123-M1-0215 REV CP-5 HAS BEEN SPLIT INTO THE FOLLOWING SHEETS:
M1-0215
M1-0215-A

CLASS I
(NUCLEAR SAFETY-RELATED)
SAFETY CLASS 1 SEISMIC CATEGORY 1
SAFETY CLASS 2 CLASS 1E
SAFETY CLASS 3 ASSOCIATED CIRCUITS

TXU ELECTRIC
CPSES
GLEN ROSE, TEXAS

FLOW DIAGRAM
AIR INTAKE AND EXHAUST SYSTEM
CP1-MEDGEE-02

DWG NO.	SH. NO.	REV.
M1-0215	A	CP-13

FINAL PRINT

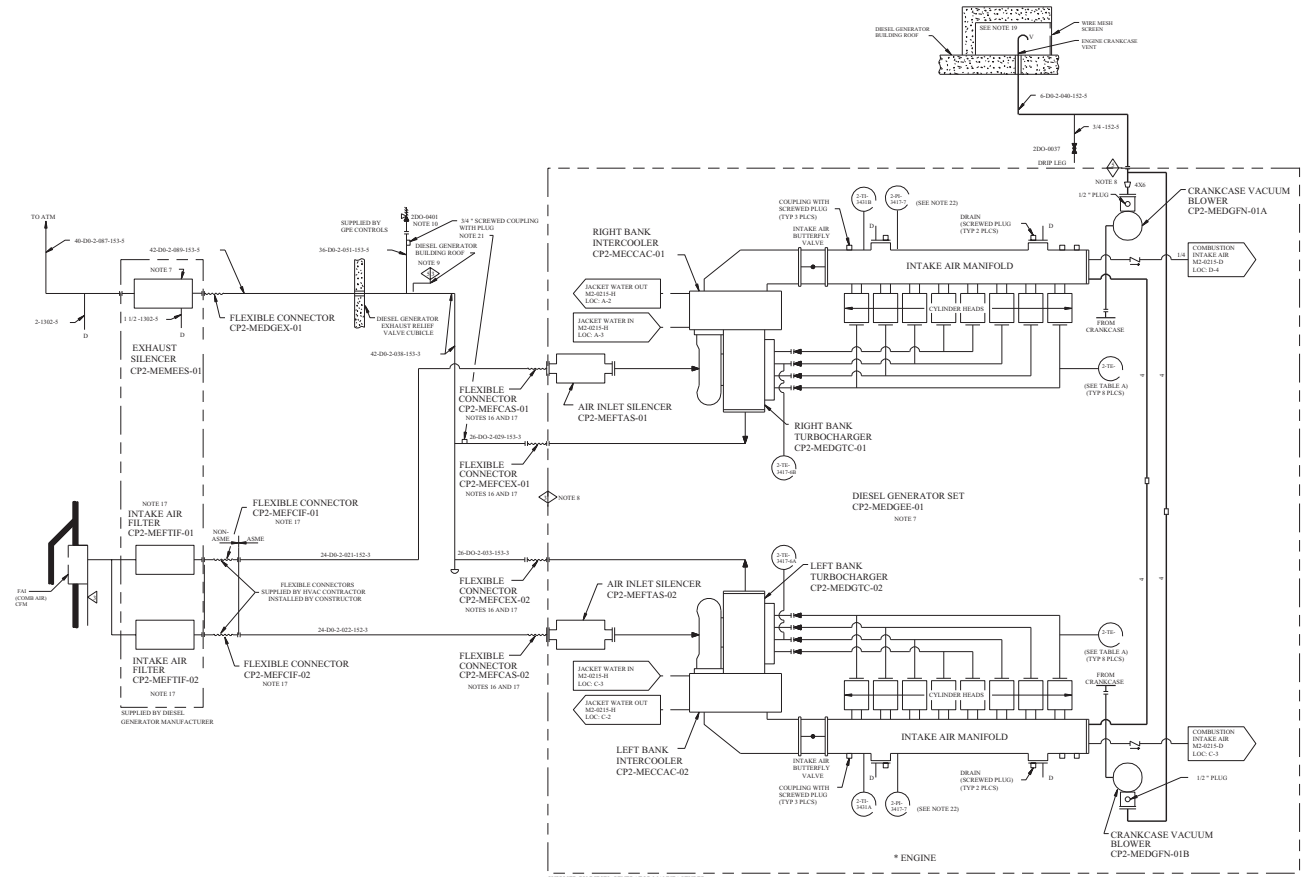

TABLE A	
CYLINDER NO.	INST TAG NO.
1L	2-TE-3417-5A
2L	2-TE-3417-5B
3L	2-TE-3417-5C
4L	2-TE-3417-5D
5L	2-TE-3417-5E
6L	2-TE-3417-5F
7L	2-TE-3417-5G
8L	2-TE-3417-5H
1R	2-TE-3417-5I
2R	2-TE-3417-5J
3R	2-TE-3417-5K
4R	2-TE-3417-5L
5R	2-TE-3417-5M
6R	2-TE-3417-5N
7R	2-TE-3417-5P
8R	2-TE-3417-5Q

REV.	DESCRIPTION	ECN NO.	BY	APVD	REMARKS
CP-9	FSAR Update	23023-AJR			THIS DRAWING REVISED TO INCORPORATE FDA-2000-000001-01-00 AND DE-0003-00-000001-01-00.

NOTES

1. ALL DRAINS ARE 3/4 " UNLESS OTHERWISE NOTED.
2. DELETED
3. ITEMS MARKED BY * ARE SUPPLIED BY TRANSAMERICA DELAVAL.
4. INSTRUMENTATION CONTROLS PROVIDED BY DIESEL GENERATOR MANUFACTURER ARE NOT SHOWN ON THIS DRAWING.
5. DELETED
6. DELETED
7. SEISMIC CATEGORY . I
8. NUCLEAR SAFETY RELATED PER IEEE-387, NOT IN SCOPE OF ANSI N18.2.
9. EXHAUST PIPING AND SILENCER MOUNTED ON ROOF ARE SEISMICALLY ANALYZED.
10. RELIEF VALVE IS NOT SEISMIC, NON-NUCLEAR SAFETY RELATED, BUT VALVE AND UPSTREAM PIPING SHALL BE TORNADO MISSILE PROTECTED.
11. DELETED
12. DELETED
13. DELETED
14. DELETED
15. DELETED
16. SUPPLIED BY DIESEL GENERATOR MANUFACTURER.
17. EQUIPMENT IS SAFETY CLASS 3, NON-ASME.
18. DELETED
19. ENGINE CRANKCASE VENT IS SEISMICALLY ANALYZED AND TORNADO MISSILE PROTECTED.
20. DELETED
21. THREADED TAPS ADDED FOR TESTING OF 2DO-0401 .
22. 2-PI-3417 HAS SEPARATE TAPS FOR BOTH THE RIGHT BANK AND THE LEFT BANK(REF DWG M2-2730 SH 01A).

LEGEND

- DRESSER COUPLING
- HALF COUPLING WITH PIPE PLUG

EQUIPMENT SCHEDULE	
MANUFACTURERS I D	TAG NO

FSAR FIGURE 9.5.5

THIS DRAWING CREATED ELECTRONICALLY

DRAWING 2323-M2-0215 REV CP-3 HAS BEEN SPLIT INTO THE FOLLOWING SHEETS:	
M2-0215	M2-0215-E
M2-0215-A	M2-0215-F
M2-0215-B	M2-0215-G
M2-0215-C	M2-0215-H
M2-0215-D	M2-0215-J

CLASS I
(NUCLEAR SAFETY-RELATED)
SAFETY CLASS 1 — SEISMIC CATEGORY I
SAFETY CLASS 2 — CLASS 1E
SAFETY CLASS 3 — ASSOCIATED CIRCUITS

TU ELECTRIC
CPSES
GLEN ROSE, TEXAS

FLOW DIAGRAM
AIR INTAKE AND EXHAUST SYSTEM
CP2-MEDGEE-01

DWG. NO.	SH. NO.	REV.
M2-0215	-	CP-9

FINAL PRINT

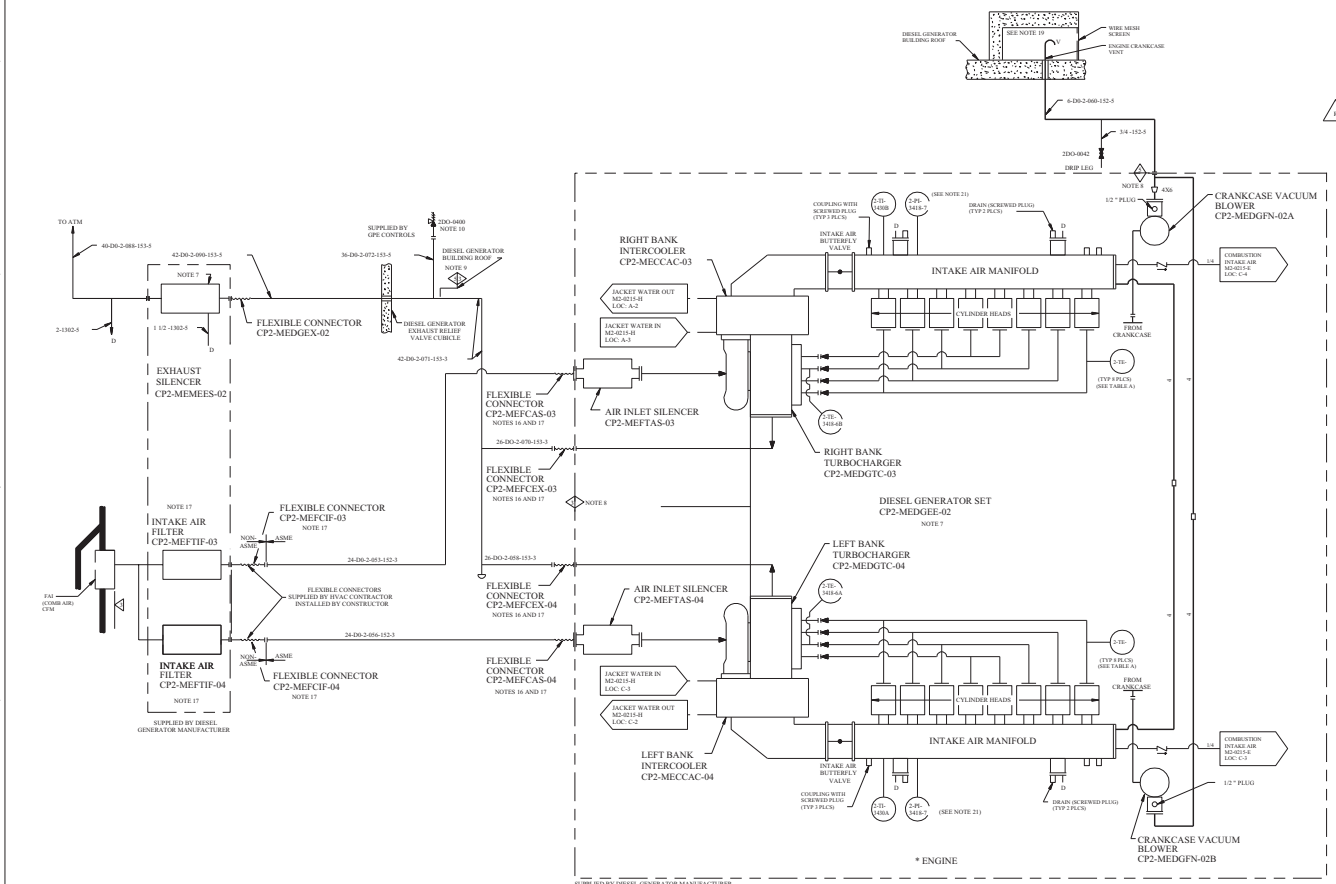

TABLE A	
CYLINDER NO.	INST TAG NO.
1L	2-TE-3418-5A
2L	2-TE-3418-5B
3L	2-TE-3418-5C
4L	2-TE-3418-5D
5L	2-TE-3418-5E
6L	2-TE-3418-5F
7L	2-TE-3418-5G
8L	2-TE-3418-5H
1R	2-TE-3418-5I
2R	2-TE-3418-5J
3R	2-TE-3418-5K
4R	2-TE-3418-5L
5R	2-TE-3418-5M
6R	2-TE-3418-5N
7R	2-TE-3418-5P
8R	2-TE-3418-5Q

REV.	DESCRIPTION	ORIG. DWG. NO.	APVD.	REMARKS
CP-6	AS-BUILT	2123-M2-0215		THIS DRAWING REVISED TO INCORPORATE FDA-2000-000001-01-00 AND DL-0000-00-000001-01-00.

NOTES

1. ALL DRAINS ARE 3/4 " UNLESS OTHERWISE NOTED.
2. DELETED
3. ITEMS MARKED BY * ARE SUPPLIED BY TRANSAMERICA DELAVAL.
4. INSTRUMENTATION CONTROLS PROVIDED BY DIESEL GENERATOR MANUFACTURER ARE NOT SHOWN ON THIS DRAWING.
5. DELETED
6. DELETED
7. SEISMIC CATEGORY . I
8. NUCLEAR SAFETY RELATED PER IEEE-387, NOT IN SCOPE OF ANSI N18.2.
9. EXHAUST PIPING AND SILENCER MOUNTED ON ROOF ARE SEISMICALLY ANALYZED.
10. RELIEF VALVE IS NON-SEISMIC, NON-NUCLEAR SAFETY RELATED, BUT VALVE AND UPSTREAM PIPING SHALL BE TORNADO MISSILE PROTECTED.
11. DELETED
12. DELETED
13. DELETED
14. DELETED
15. DELETED
16. SUPPLIED BY DIESEL GENERATOR MANUFACTURER.
17. EQUIPMENT IS SAFETY CLASS 3, NON-ASME.
18. DELETED
19. ENGINE CRANKCASE VENT IS SEISMICALLY ANALYZED AND TORNADO MISSILE PROTECTED.
20. DELETED
21. 2-PS-3418 HAS SEPARATE TAPS FOR BOTH THE RIGHT BANK AND THE LEFT BANK (REF M2-2730 SH 02A).

LEGEND

- DRESSER COUPLING
- HALF COUPLING WITH PIPE PLUG

EQUIPMENT SCHEDULE	
MANUFACTURERS I.D.	TAG NO.

FSAR FIGURE 9.5.5-7

THIS DRAWING CREATED ELECTRONICALLY

DRAWING 2123-M2-0215 REV CP-3
HAS BEEN SPLIT INTO THE FOLLOWING SHEETS:

M2-0215	M2-0215-E
M2-0215-A	M2-0215-F
M2-0215-B	M2-0215-G
M2-0215-C	M2-0215-H
M2-0215-D	M2-0215-J

CLASS I
(NUCLEAR SAFETY-RELATED)
SAFETY CLASS 1 — SEISMIC CATEGORY I
SAFETY CLASS 2 — CLASS 1E
SAFETY CLASS 3 — ASSOCIATED CIRCUITS

TU ELECTRIC
CPSES
GLEN ROSE, TEXAS

FLOW DIAGRAM
AIR INTAKE AND EXHAUST SYSTEM
CP2-MEDGEE-02

DWG. NO. M2-0215 | SH. NO. A | REV. CP-6

FINAL PRINT

mc273900.dgn A M2-0215-A

DIESEL GENERATOR BUILDING
PLAN AT EL 810'-6"

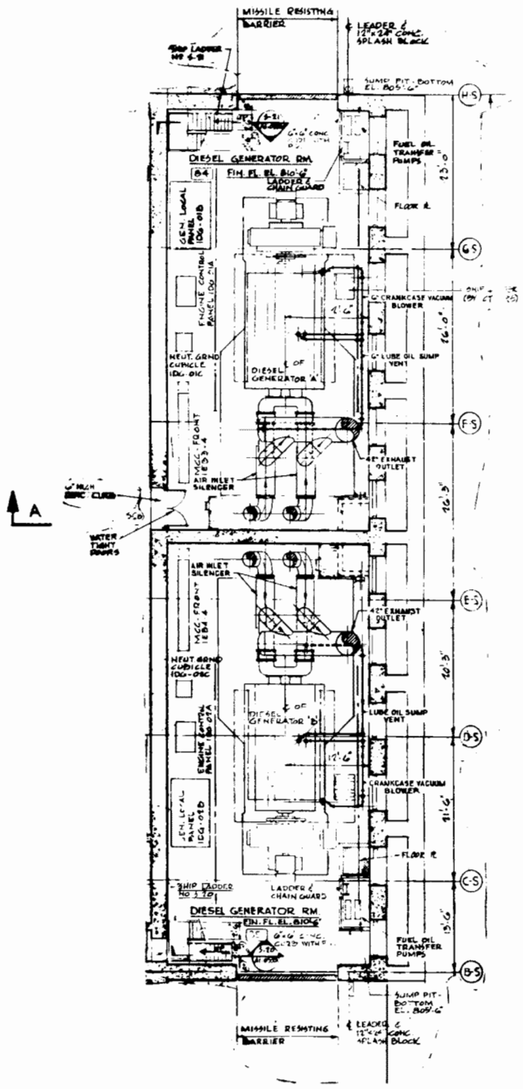

DIESEL GENERATOR BUILDING
PLAN AT EL 844'-0"

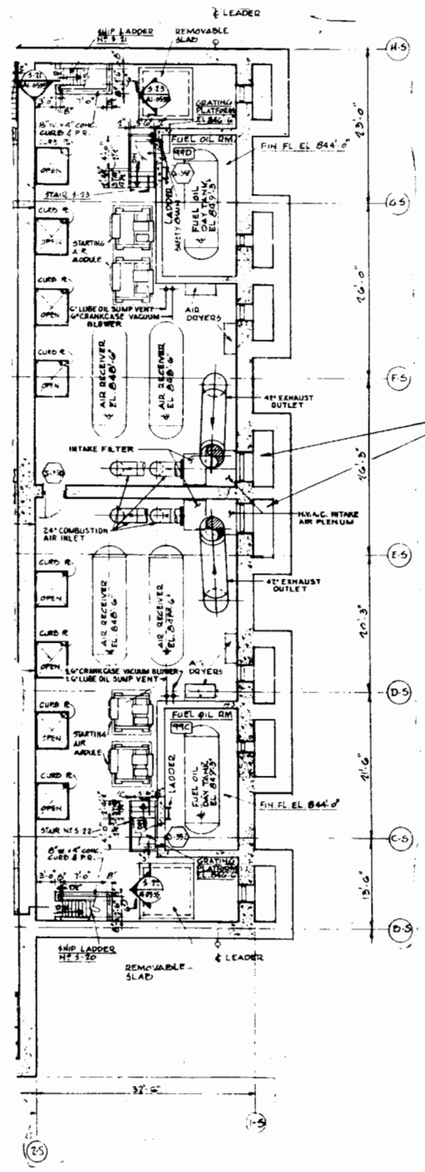

DIESEL GENERATOR BUILDING
PLAN AT EL 865'-0"

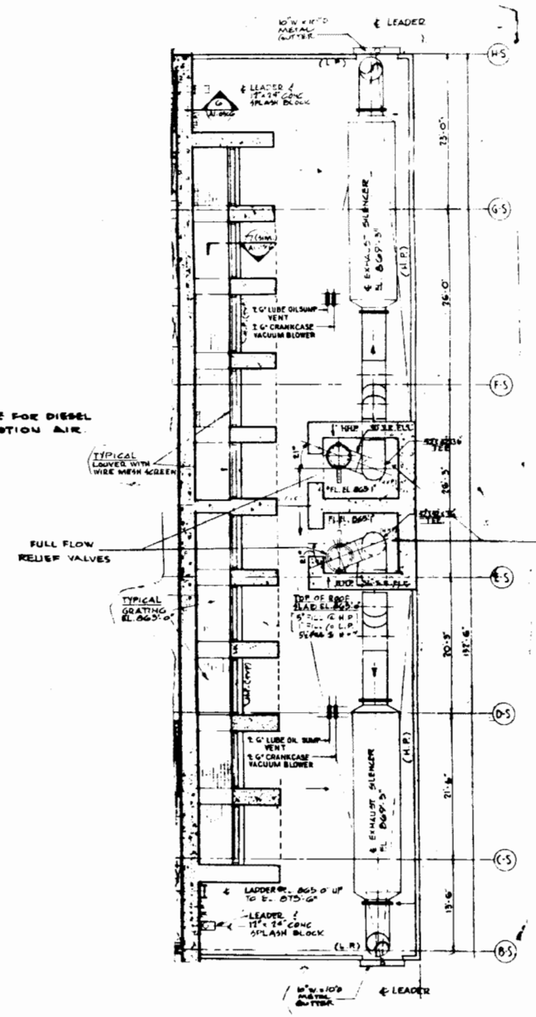

AMENDMENT 11
JULY 31, 1980

COMANCHE PEAK S.E.S.
FINAL SAFETY ANALYSIS REPORT
UNITS 1 and 2

DIESEL GENERATOR
BUILDING PLAN

FIGURE 9.5-58

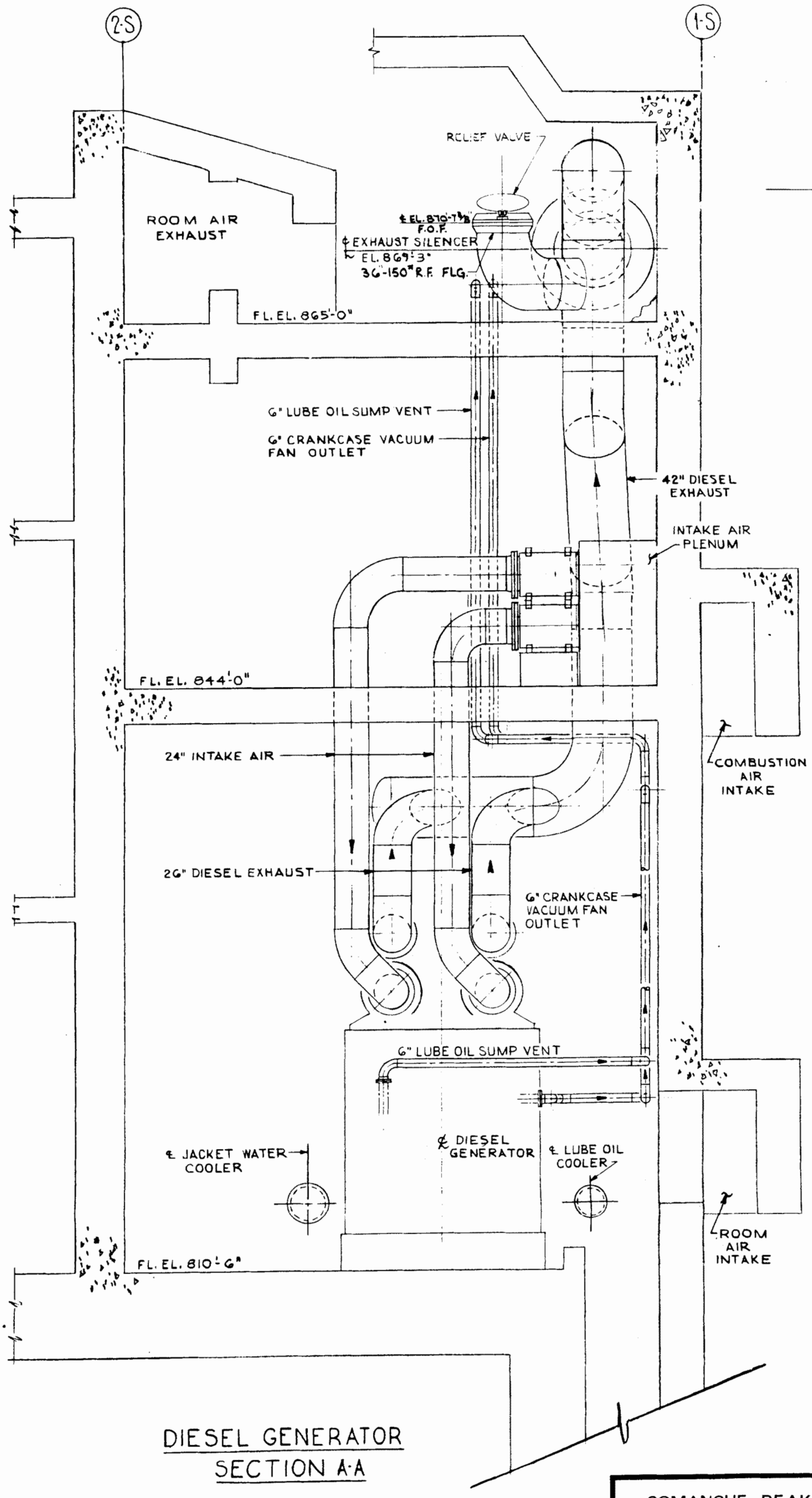

DIESEL GENERATOR
SECTION A-A

COMANCHE PEAK S.E.S.
FINAL SAFETY ANALYSIS REPORT
UNITS 1 and 2

DIESEL GENERATOR
BUILDING ELEVATION

FIGURE 9.5-59

FIGURE 9.5-60

96

This Figure Not Used

REV	DWN	CHK	APVD	REMARKS
CP-34	MM 07-22-2014	GAW 07-22-2014		THIS DRAWING REVISED TO INCORPORATE DESIGN CHANGE FDA 2013-000008-29-00 PER SK-0001-13-000008-29-00

NOTES:

1. FOR FIRE PROTECTION SYMBOLS AND NOTES SEE DRAWING M1-0225. FOR MECHANICAL SYMBOLS AND NOTES SEE DRAWING M1-0200.
2. UNLESS OTHERWISE NOTED, DRAINS COLLECTED BY LOCAL DRAIN SYSTEM UNDER ADMINISTRATIVE CONTROL.
3. THE FIRE SUPPRESSION SYSTEM FOR STARTUP TRANSFORMER XST2 WILL NOT BE IN SERVICE WHEN SPARE TRANSFORMER XST1/2 IS USED TO REPLACE XST2.
4. THE FIRE SUPPRESSION SYSTEM FOR TRANSFORMERS XST1 AND XST1A WILL ONLY BE IN SERVICE WHEN ITS ASSOCIATED TRANSFORMER IS ENERGIZED.
5. SITE FACILITIES, NON QA APPLICABLE.
6. OPERATIONS, FP QA APPLICABLE.

REFERENCE DRAWINGS:

1. CP-0712-003
2. CP-0708
3. DWG#-1-51.326-920-5A2
4. TSS-FP-86004
5. DWG#-1-51.3530728.A2
6. 1869-B-3
7. DWG#-2-51.326-920-5A2
8. SP-1-CP-0749
9. DWG#-1-51.334681-1A8
10. DWG#-2-51.304201-4A2
11. DWG#-1-80.353034-5A3
12. DWG#-2-80.353034-5A3
13. DWG#-2-1-80.353034-5A3
14. DWG#-3-80.353034-5A3
15. DWG#-3.1-80.353034-5A3
16. DWG#-1-51.304201-4A2
17. DWG#-3-51.304201-4A2
18. DWG#-M1-1012
19. DWG#-E-2J14-F-0289
    DWG#-E-2J14-F-0292
20. DWG#-E-2J17-F-0308

DETAIL 1

DETAIL 2

CLASS II

LUMINANT
CPNPP
GLEN ROSE, TEXAS

FLOW DIAGRAM
FIRE PROTECTION SYSTEM
MAIN LOOP

DWG. NO. M1-0225 | SH. NO. 06 | REV. CP-34

FSAR FIGURE 9.5-61

THIS DRAWING CREATED ELECTRONICALLY

$$$$$$$ DATE $$$$$$$

me00084h.dgn

< FINAL PRINT >

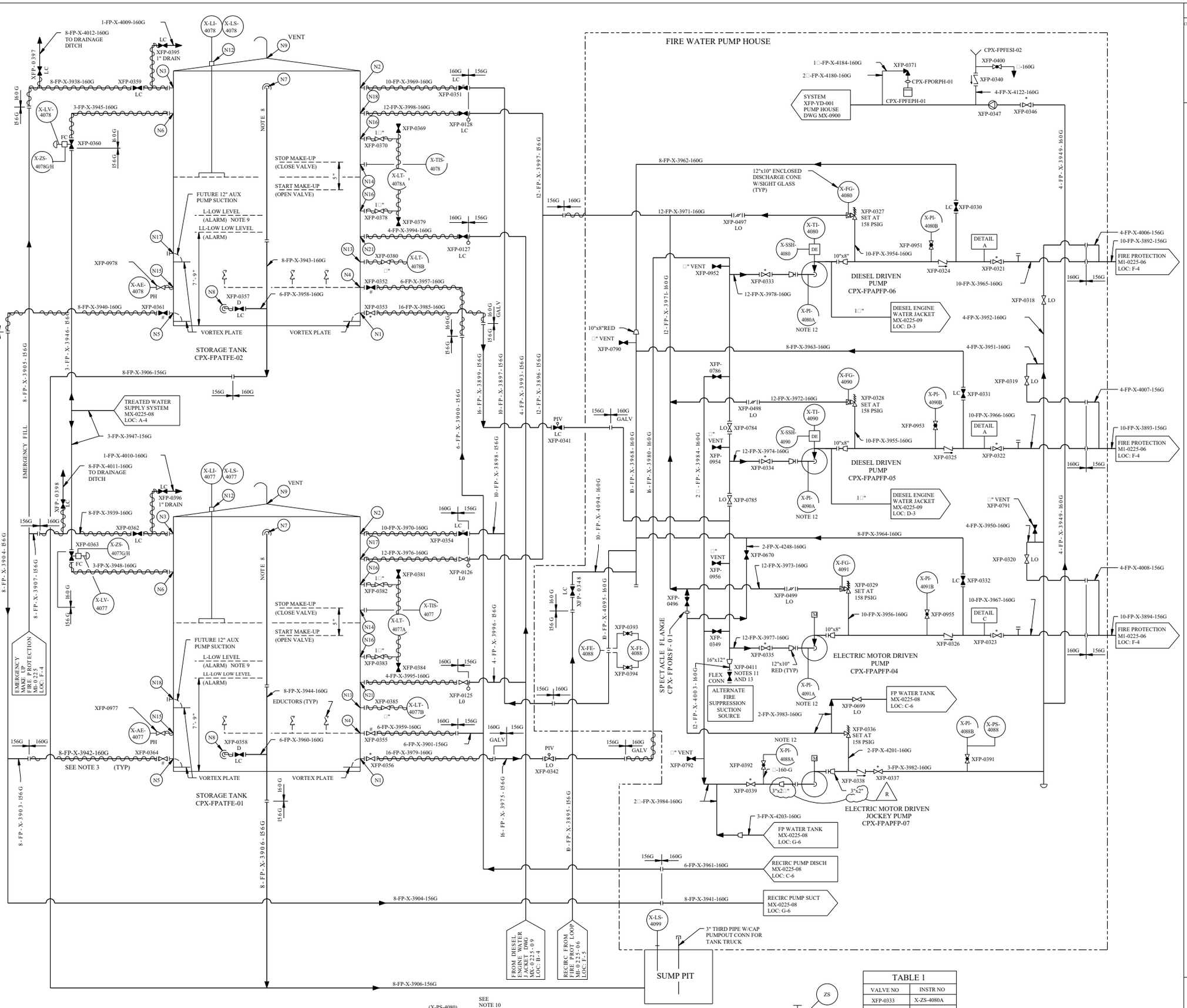

TABLE 1	
VALVE NO	INSTR NO
XFP-0333	X-ZS-4080A
XFP-0321	X-ZS-4080B
XFP-0334	X-ZS-4090A
XFP-0322	X-ZS-4090B
XFP-0335	X-ZS-4091A
XFP-0323	X-ZS-4091B
XFP-0339	X-ZS-4088A
XFP-0337	X-ZS-4088B
XFP-0356	X-ZS-4077
XFP-0353	X-ZS-4078
XFP-0346	X-ZS-4088

TABLE 2	
VALVE	INSTR
XFP-0364	X-ZS-4077C/D
XFP-0361	X-ZS-4078C/D
XFP-0355	X-ZS-4077E/F
XFP-0352	X-ZS-4078E/F

REV	DWN	CHKD	APVD	REMARKS
CP-18	DLK 11-01-2014	GAW 11-01-2014		THIS DRAWING REVISED TO INCORPORATE DESIGN CHANGE FDA 2014-000249-01-00 PER SK-0002-14-000249-01-00.

NOTES:

1. FOR INSTRUMENT LEGEND, SYMBOLS AND NOTES REFER TO DWG M1-2200-01. FOR MECHANICAL SYMBOLS AND NOTES REFER TO DWG M1-0200.
2. ALL VALVES MARKED WITH A * AND # WILL HAVE INDICATION SHOWN ON DETAIL B AND D RESPECTIVELY.
3. ALL ABOVE GROUND EXPOSED PIPING IS TO BE HEAT TRACED.
4. DELETED
5. LCP-1 COMMON LOCAL PANEL (CPX-FPCPLV-01) IN CHEMICAL FEED EQUIPMENT ROOM.
   LCP-4 LOCAL CONTROL PANEL FOR MOTOR DRIVEN PUMP 04 (CPX-FPAPFP-04)
   LCP-5 LOCAL CONTROL PANEL FOR DIESEL PUMP 05 (CPX-FPAPFP-05)
   LCP-6 LOCAL CONTROL PANEL FOR DIESEL PUMP 06 (CPX-FPAPFP-06)
   CR-UNIT 1 AND 2 MAIN CONTROL ROOM (COMMON AREA)
6. ALL BUILDING FLOOR AND EQUIPMENT DRAINS WILL BE ROUTED TO SUMP PIT.
7. SEE 15454.15-ESK-4FPS03 SH 1 TO 4 AND 15454.15-ESK-10FPS01 FOR ALARMS ON LOCAL DIESEL DRIVEN PUMP CONTROLLER PANELS WHICH ACTUATE COMMON TROUBLE ALARMS ON THE MAIN CONTROL PANEL, FIRE DETECTION PANEL CPX-EIPRLV-02 AND LOCAL PANEL CPX-FPCPLV-01.
8. TANK OVERFLOW PIPING BY TANK VENDOR (CBI).
9. LOW LEVEL ALARM SET AT 519,586 GALLONS IN THE TANK ABOVE CENTERLINE OF PUMP SUCTION.
10. DIESEL DRIVEN PUMPS CPX-FPAPFP-05 AND CPX-FPAPFP-06 START WHEN THE DISCHARGE HEADER PRESSURE DROPS BELOW 140 PSIG AT 10 AND 20 SECOND INTERVALS RESPECTIVELY.
11. XFP-0411 IS AN APPROVED AND PROCEDURALIZED ALTERNATIVE FIRE SUPPRESSION SUCTION SOURCE.
12. ACCEPTABLE SAMPLE POINT.
13. FLEX CONNECTION - ADAPTER (CPX-FXSTFP-01) MAINTAINED IN WAREHOUSE.

REFERENCES:

FLOW DIAGRAM - FIRE PROTECTION SYSTEM MAIN LOOP DWG M1-0225-6
FLOW DIAGRAM - POTABLE AND SANITARY WATER SYSTEM DWG M1-0227
FLOW DIAGRAM - FIRE PROTECTION TREATED WATER SYSTEM DWG MX-0225-08
FLOW DIAGRAM - FIRE PROTECTION TREATED WATER SYSTEM DWG MX-0225-09
PUMP HOUSE SUPPRESSION SYSTEM DWG MX-0900

FSAR FIGURE 9.5-62

THIS DRAWING CREATED ELECTRONICALLY

CLASS II

LUMINANT
CPNPP
GLEN ROSE, TEXAS

FLOW DIAGRAM
FIRE PROTECTION TREATED WATER SUPPLY SYSTEM

DWG. NO.	SH. NO.	REV.
MX-0225	07	CP-18

me871600.dgn A MX-0225-07 B C D E F G FINAL PRINT H

REV	DWN	CHK	APVD	REMARKS
CP-11	DLK 05-30-2006	MM 05-30-2006		THIS DRAWING REVISED TO INCORPORATE DESIGN CHANGE FDA 2003-002435-04-01 PER SK-0002-03-002435-04-01.

NOTES:

1. FOR INSTRUMENT LEGEND, SYMBOLS AND NOTES REFER TO DWG M1-2200-01. FOR MECHANICAL SYMBOLS AND NOTES REFER TO DWG M1-0200.
2. 3" CONNECTION FOR WATER TRUCK FILL, NOT FOR FILL BY POTABLE WATER SOURCE.
3. DELETED
4. PIPING SHOWN ON THIS DRAWING IS EXEMPT FROM QA APPLICABILITY REQUIREMENT PER SPECIFICATION 2323-MS-98.
5. ACCEPTABLE SAMPLE POINT.

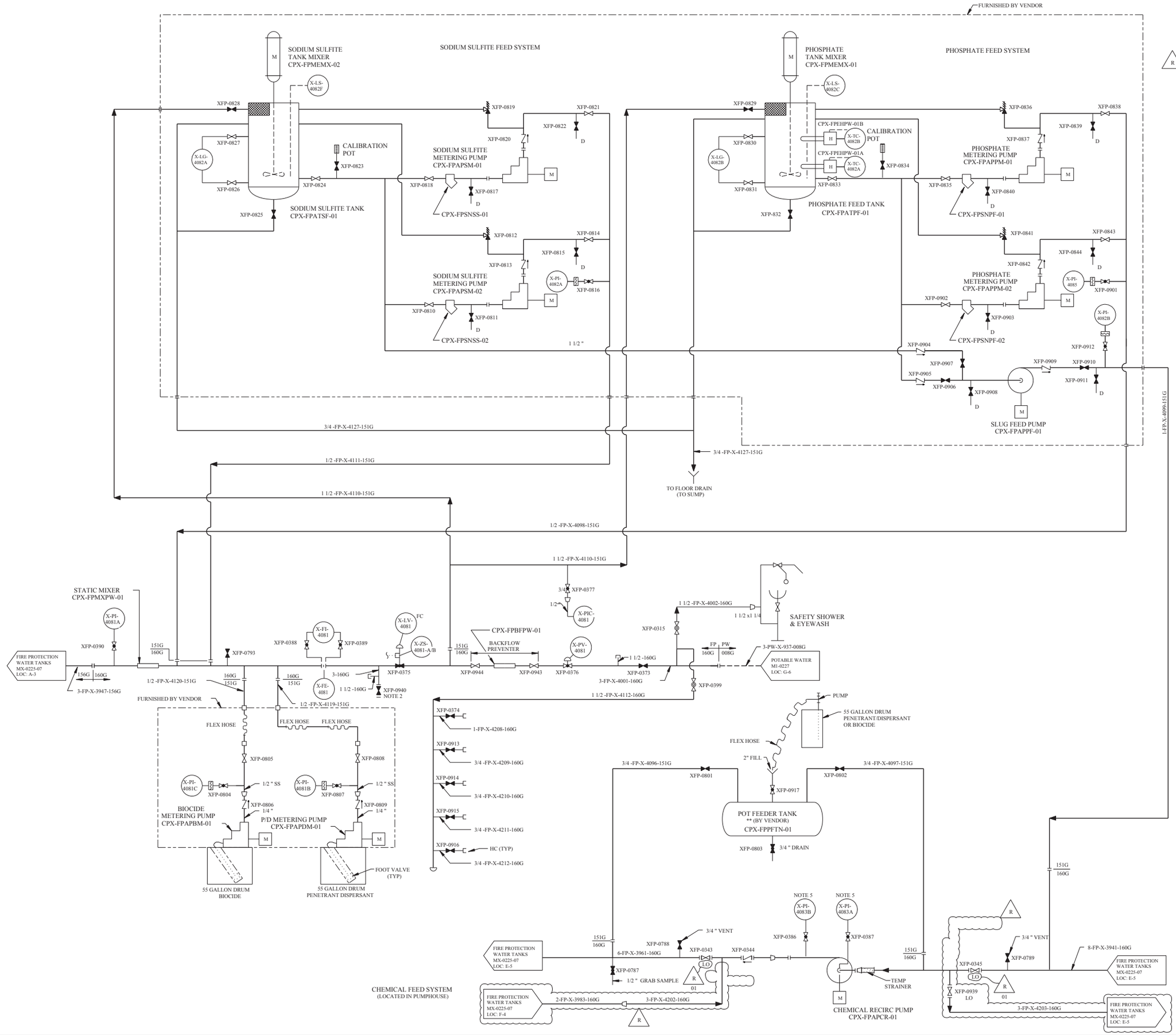

CLASS II

LUMINANT
CPSES
GLEN ROSE, TEXAS

FLOW DIAGRAM
FIRE PROTECTION TREATED WATER
SUPPLY SYSTEM

DWG. NO.	SH. NO.	REV.
MX-0225	08	CP-11

REF CKD 6-1-98 CP-10

me686700.dgn MX-0225-08

FINAL PRINT

REV	DWN	CHKD	APVD	REMARKS
CP-11	02 12 09 1999			THIS DRAWING REVISED TO INCORPORATE DESIGN CHANGE DCN 13208 REV 0.

NOTES:

1. FOR INSTRUMENT LEGEND, SYMBOLS AND NOTES REFER TO DWG M1-2280-01. FOR MECHANICAL SYMBOLS AND NOTES REFER TO TO DWG M1-0200.
2. PIPING SHOWN ON THIS DRAWING IS EXEMPT FROM QA APPLICABILITY REQUIREMENT PER SPECIFICATION MS-98, EXCEPT LINE NUMBERS 3/4 -FP-X-4100-152G AND 3/4 -FP-X-4105-152G.
3. * * VENDOR SUPPLIED

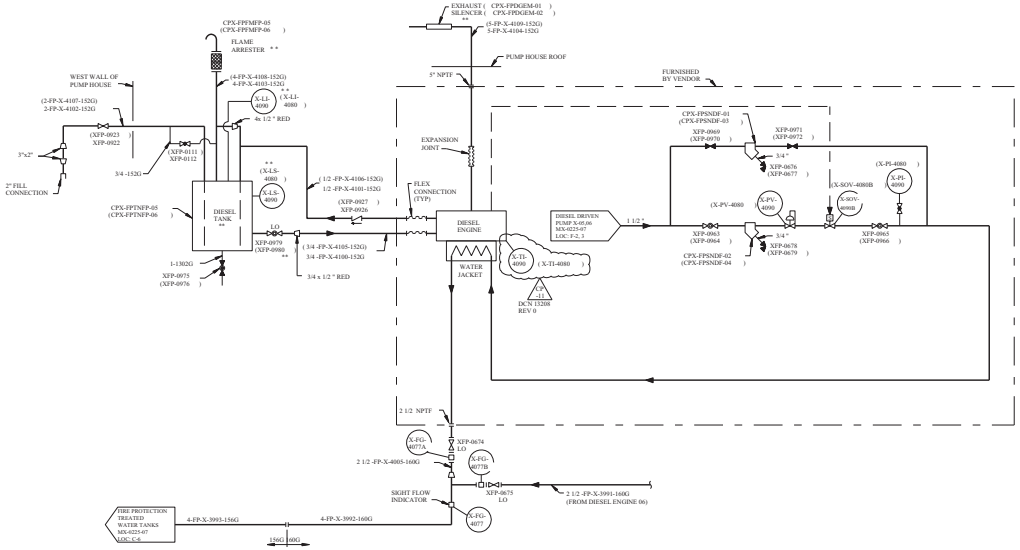

DIESEL ENGINE
CPX-FPAPFP-05,06
LINE NUMBERS AND INSTRUMENT NUMBERS IN PARENTHESES ARE FOR DIESEL PUMP CPX-FPAPFP-06

FSAR FIGURE 9.5-62

THIS DRAWING CREATED ELECTRONICALLY

CLASS II

TXU ELECTRIC
CPSES
GLEN ROSE, TEXAS

FLOW DIAGRAM
FIRE PROTECTION TREATED WATER SUPPLY SYSTEM

DWG. NO.	SH. NO.	REV.
MX-0225	09	CP-11

FINAL PRINT

mx0001z9.dgn

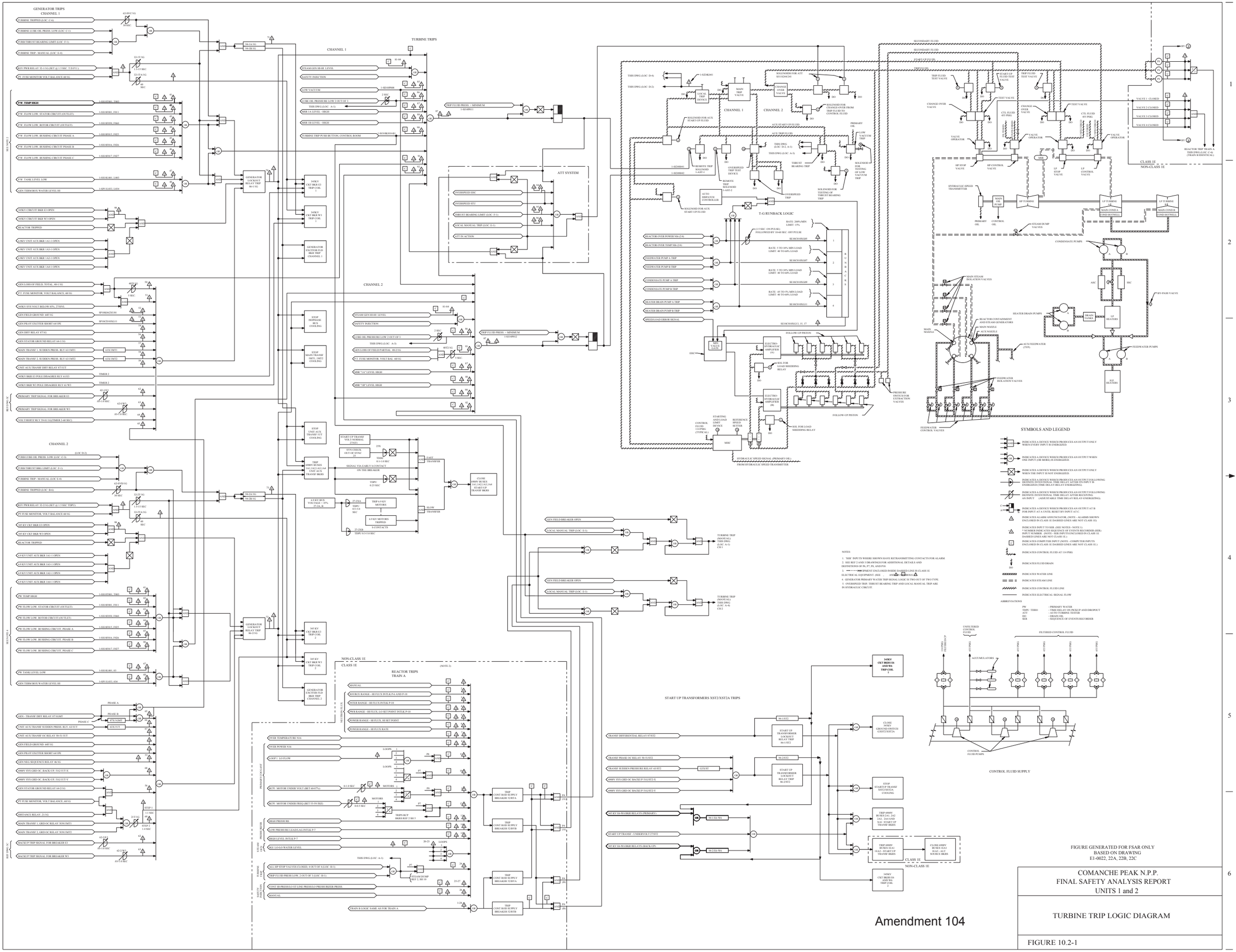
GENERATOR TRIPS
CHANNEL 1
TURBINE TRIPPED (LOC C-6)
TURBINE LUBE OIL PRESS. LOW (LOC C-1)
TURB THRUST BEARING LIMIT (LOC F-1)
TURBINE TRIP - MANUAL (LOC E-4)
62-3VU/1G
10 SEC
86V PWR RELAY 32-1/1G/(SET @ 1.5 SEC T.D.P.U.)
32-1T/1G
1.5+1.5 SEC
PT. FUSE MONITOR VOLT BALANCE 60/1G
32-1T/A/1G
45 SEC
P.W. TEMP HIGH
P.W. FLOW LOW, STATOR CIRCUIT (OUTLET)
P.W. FLOW LOW, ROTOR CIRCUIT (OUTLET)
P.W. FLOW LOW, BUSHING CIRCUIT PHASE A
P.W. FLOW LOW, BUSHING CIRCUIT PHASE B
P.W. FLOW LOW, BUSHING CIRCUIT PHASE C
P.W. TANK LEVEL LOW
GEN TERM BOX WATER LEVEL HI
SEE PAGE 2
345KV CIRCUIT BKR E3 OPEN
345KV CIRCUIT BKR W3 OPEN
REACTOR TRIPPED
13KV UNIT AUX BKR 1A1-1 OPEN
13KV UNIT AUX BKR 1A3-1 OPEN
13KV UNIT AUX BKR 1A2-1 OPEN
13KV UNIT AUX BKR 1A4-1 OPEN
GEN LOSS OF FIELD, TOTAL, 40-1/1G
PT. FUSE MONITOR, VOLT BALANCE, 60/1G
345KV SYS VOLT BELOW 85%, 27/HVL
GEN FIELD GROUND 64F/1G
GEN PILOT EXCITER SHORT 64/1PE
GEN DIFF RELAY 87/1G
GEN STATOR GROUND RELAY 64-1/1G
MAIN TRANSF 1, SUDDEN PRESS. RLY 63/1MT1
MAIN TRANSF 2, SUDDEN PRESS. RLY 63/1MT2
UNIT AUX TRANSF DIFF RELAY 87/1UT
345KV BKR E3 POLE DISAGREE RLY 61/E3
345KV BKR W3 POLE DISAGREE RLY 61/W3
40T1/1G
5 SEC
PRIMARY TRIP SIGNAL FOR BREAKER E3
62-1/1G
0.0+1.0 SEC
PRIMARY TRIP SIGNAL FOR BREAKER W3
62-3/1G
0.0+1.0 SEC
VOLTHERTZ RLY 59-81/1G(TIMER 2-60 SEC)
SEE PAGE 3
CHANNEL 2
(LOC D-2)
TURB LUBE OIL PRESS. LOW (LOC C-3)
TURB THRUST BRG LIMIT (LOC F-1)
TURBINE TRIP - MANUAL (LOC E-4)
TURBINE TRIPPED (LOC B-6)
62-4VD/1G
10 SEC
86V PWR RELAY 32-2/1G/(SET @ 1.5 SEC TDPU)
32-2T/1G
1.5+1.5 SEC
PT FUSE MONITOR, VOLT BALANCE 60/1G
32-2T/A/1G
45 SEC
345 KV CKT BKR E2 OPEN
345 KV CKT BKR W3 OPEN
REACTOR TRIPPED
13.8 KV UNIT AUX BKR 1A1-1 OPEN
13.8 KV UNIT AUX BKR 1A3-1 OPEN
13.8 KV UNIT AUX BKR 1A2-1 OPEN
13.8 KV UNIT AUX BKR 1A4-1 OPEN
P.W. TEMP HIGH
P.W. FLOW LOW, STATOR CIRCUIT (OUTLET)
P.W. FLOW LOW, ROTOR CIRCUIT (OUTLET)
P.W. FLOW LOW, BUSHING CIRCUIT, PHASE A
P.W. FLOW LOW, BUSHING CIRCUIT, PHASE B
P.W. FLOW LOW, BUSHING CIRCUIT, PHASE C
P.W. TANK LEVEL LOW
GEN TERM BOX WATER LEVEL HI
GEN - TRANSF DIFF RELAY 87/GMT
UNIT AUX TRANSF SUDDEN PRESS. RLY, 63-1UT
UNIT AUX TRANSF OC RELAY 50-51/1UT
GEN FIELD GROUND 64F/1G
GEN PILOT EXCITER SHORT 64/1PE
GEN NEU SEQUENCE RELAY 46/1G
6900V SYS GRD OC BACK-UP, 51G/1UT-X
6900V SYS GRD OC BACK-UP, 51G/1UT-Y
GEN STATOR GROUND RELAY 64-2/1G
PT FUSE MONITOR, VOLT BALANCE, 60/1G
DISTANCE RELAY- 21/1G
MAIN TRANSF 1, GRD OC RELAY 50N/1MT1
MAIN TRANSF 2, GRD OC RELAY 50N/1MT2
BACKUP TRIP SIGNAL FOR BREAKER E3
BACKUP TRIP SIGNAL FOR BREAKER W3
SEE PAGE 4
STEP 1
1.1 SEC
STEP 2
1.4 SEC
21T/1G
62-2/E3
0.0+1.0 SEC
62-2/W3
0.0+1.0 SEC
TURBINE TRIPS
CHANNEL 1
STEAM GEN HI-HI LEVEL
SAFETY INJECTION
LOW VACUUM
LUBE OIL PRESSURE LOW 2 OUT OF 3
THIS DWG (LOC A-1)
MSR 1A LEVEL - HIGH
MSR 1B LEVEL - HIGH
TURBINE TRIP PUSH BUTTON, CONTROL ROOM
1-SD1HS010-D1
2 SEC
TRIP FLUID PRESS. - MINIMUM
1-SD1HP011
ATT SYSTEM
OVERSPEED 1H/C
OVERSPEED ST/U
THRUST BEARING LIMIT (LOC F-1)
LOCAL MANUAL TRIP (LOC E-1)
ATT IN ACTION
CHANNEL 2
STEAM GEN HI-HI LEVEL
SAFETY INJECTION
LUBE OIL PRESSURE LOW 2 OUT OF 3
THIS DWG (LOC A-3)
GEN LOSS OF FIELD PARTIAL 40-2/1G
PT. FUSE MONITOR, VOLT BAL 60/1G
MSR "1A" LEVEL HIGH
MSR "1B" LEVEL HIGH
TRIP FLUID PRESS - MINIMUM
1-SD1HP012
START-UP TRANSF YOU 3-NORMAL 27/ST1
SYN CHECK OUT OF SYNC 25
TDDO 0.1-1.0 SEC
SIGNAL VIA EARLY b CONTACT ON THE BREAKER
TDPU 0.25 SEC
FAST TRANSFER
SLOW TRANSFER
CLOSE 6900V BUSES 1A1,1A2,1A3,1A4 START-UP TRANSF BKRS
TRIP 6900V BUSES 1A1,1A2,1A3,1A4 UNIT AUX TRANSF BKRS
6.9 KV BUS VOLTAGE - 10% 27-2A, B
27-2XA
TDPU 0.5-5.0 SEC
TRIP 6.9 KV MOTORS
6.9 KV MOTORS TRIPPED
N CONTACTS
27-2XB
TDPU 0.5-5.0 SEC
GENERATOR LOCKOUT RELAY TRIP 86-1/1G
GENERATOR LOCKOUT RELAY TRIP 86-2/1G
345KV CKT BKR E3 TRIP COIL 1
345KV CKT BKR W3 TRIP COIL 1
GENERATOR EXCITER FLD BKR TRIP CHANNEL 1
STOP ISOPHASE BUS COOLING
STOP MAIN TRANSF (MT1, 1MT2 COOLING
STOP UNIT AUX TRANSF 1UT COOLING
345 KV CKT BKR E3 TRIP COIL 2
345 KV CKT BKR W3 TRIP COIL 2
GENERATOR EXCITER FLD BKR TRIP CHANNEL 2
NON-CLASS 1E
CLASS 1E
REACTOR TRIPS TRAIN A
(NOTE 2)
MANUAL
SOURCE RANGE - HI FLUX INTLK P-6 AND P-10
INTER RANGE - HI FLUX INTLK P-10
PWR RANGE - HI FLUX, LO SET POINT INTLK P-10
POWER RANGE - HI FLUX, HI SET POINT
POWER RANGE - HI FLUX RATE
NEUTRON FLUX
OVER TEMPERATURE N16
OVER POWER N16
LOOP 1 LO FLOW
RCP1 MOTOR UNDER VOLT (SET 60-87%)
RCP1 MOTOR UNDER FREQ (SET 55-59 HZ)
PRIMARY COOLANT
HIGH PRESSURE
LOW PRESSURE LEAD/LAG INTLK P-7
HIGH LEVEL INTLK P-7
SG2 LO-LO WATER LEVEL
PRESS/LEVEL
STEAM GENERATOR
ALL HP STOP VALVES CLOSED, 4 OUT OF 4 (LOC 10-1)
TRIP FLUID PRESS LOW, 2 OUT OF 3 (LOC 10-1)
TURBINE TRIPS
CONT RM SUPPLY BREAKER 52/RTA
CONT RM SUPPLY BREAKER 52/RTB
CONT RM SUPPLY BREAKER 52/RVA
CONT RM SUPPLY BREAKER 52/RTB
TRAIN B LOGIC SAME AS FOR TRAIN A
THIS DWG (LOC A-4)
THIS DWG (LOC D-4)
THIS DWG (LOC D-2)
1-SD1HK041
1-SD4584041
1-SD4584042
1-SD4584043
1-SD4584044
LOCAL TRIP DEVICE
MAIN TRIP VALVE
CHANGE OVER VALVE
SOLENOIDS FOR ATT SD1US244/241
SOLENOID FOR CHANGE-OVER FROM TRIP FLUID TO CONTROL FLUID
SOLENOID FOR AUX START-UP FLUID
AUX START-UP FLUID
AUX TRIP FLUID
PRIMARY OIL
LOW VACUUM TRIP
REMOTE TRIP SOLENOID 1-AST-1
OVERSPEED TRIP TEST DEVICE
REMOTE TRIP SOLENOID 1-AST-2
THRUST BEARING TRIP
SOLENOID FOR TESTING OF LOW VACUUM TRIP
SOLENOID FOR TESTING OF THRUST BEARING TRIP
OVERSPEED TRIP
AUTO DISPATCH CONTROLLER
SOLENOID FOR AUX START-UP FLUID
T-G RUNBACK LOGIC
RATE: 200%/MIN LIMIT: 15%
(1.5 SEC. ON PULSE) FOLLOWED BY 10-60 SEC. OFF PULSE
SE1HC501HSG05
RATE: 5 TO 10% MIN LOAD LIMIT: 40 TO 60% LOAD
SE1HC501HSG07
RATE: 5 TO 10% MIN LOAD LIMIT: 40 TO 60% LOAD
SE1HC501HSG09
RATE: .05 TO 5% MIN LOAD LIMIT: 40 TO 60% LOAD
SE1HC501HSG11
SE1HC501HSG13, 15, 17
REACTOR OVER POWER N16 (2/4)
REACTOR OVER TEMP N16 (2/4)
FEEDWATER PUMP A TRIP
FEEDWATER PUMP B TRIP
CONDENSATE PUMP A TRIP
CONDENSATE PUMP B TRIP
HEATER DRAIN PUMP A TRIP
HEATER DRAIN PUMP B TRIP
SPEED/LOAD ERROR SIGNAL
RUNBACK LOGIC
MAIN VALVE GATE
EHC
ELECTRO-HYDRAULIC AMPLIFIER (A)
ELECTRO-HYDRAULIC AMPLIFIER (B)
FOLLOW-UP PISTON
SOL FOR LOAD SHEDDING RELAY
PRESSURE SWITCH FOR EXTRACTION VALVES
CONTROL FLUID 114 PSIG (TYPICAL)
STARTING AND LOAD LIMIT DEVICE
REFERENCE SPEED SETTER
MSC
HYDRAULIC SPEED SIGNAL (PRIMARY OIL) FROM HYDRAULIC SPEED TRANSMITTER
SECONDARY FLUID
TRIP FLUID
TRIP FLUID TEST VALVE
START-UP FLUID TEST VALVE
CHANGE OVER VALVE
TEST VALVE
CTL FLUID 455 PSIG
VALVE OPERATOR
HP STOP VALVE
HP CONTROL VALVE
MSR
LP STOP VALVE
LP CONTROL VALVE
VALVE 1 CLOSED
VALVE 2 CLOSED
VALVE 3 CLOSED
VALVE 4 CLOSED
REACTOR TRIP TRAIN A THIS DWG (LOC C-6) (TRAIN B IDENTICAL)
CLASS 1E
NON-CLASS 1E
HYDRAULIC SPEED TRANSMITTER
MAIN OIL PUMP
HP TURBINE
LP TURBINE A1
LP TURBINE B1
MAIN COND A
MAIN COND B
COND HOTWELL
PRIMARY OIL
CONTROL OIL
STEAM DUMP VALVES
CONDENSATE PUMPS
MAIN STEAM ISOLATION VALVES
ASC
SSC
BY-PASS VALVE
HEATER DRAIN PUMPS
DRAIN TANKS
LP HEATERS
MAIN NOZZLE
REACTOR CONTAINMENT AND STEAM GENERATORS
AUX NOZZLE
AUX FEEDWATER (TYP)
FEEDWATER PUMPS
HP HEATERS
FEEDWATER ISOLATION VALVES
FEEDWATER CONTROL VALVES
SYMBOLS AND LEGEND
INDICATES A DEVICE WHICH PRODUCES AN OUTPUT ONLY WHEN EVERY INPUT IS ENERGIZED
INDICATES A DEVICE WHICH PRODUCES AN OUTPUT WHEN ONE INPUT OR MORE) IS ENERGIZED
INDICATES A DEVICE WHICH PRODUCES AN OUTPUT ONLY WHEN THE INPUT IS NOT ENERGIZED
INDICATES A DEVICE WHICH PRODUCES AN OUTPUT FOLLOWING DEFINITE INTENTIONAL TIME DELAY AFTER ITS INPUT IS ENERGIZED (TIME DELAY-RELAY ENERGIZING).
INDICATES A DEVICE WHICH PRODUCES AN OUTPUT FOLLOWING DEFINITE INTENTIONAL TIME DELAY AFTER RECEIVING AN INPUT (ADJUSTABLE TIME DELAY RELAY-ENERGIZING).
INDICATES A DEVICE WHICH PRODUCES AN OUTPUT AT B FOR INPUT AT A UNTIL RESET BY INPUT AT C.
INDICATES ALARM ANNUNCIATOR, (NOTE – ALARMS SHOWN ENCLOSED IN CLASS 1E DASHED LINES ARE NOT CLASS 1E)
INDICATES INPUT TO SER. (SEE NOTES - NOTE 1) * NUMBER INDICATES SEQUENCE OF EVENTS RECORDER (SER) INPUT NUMBER. (NOTE - SER INPUTS ENCLOSED IN CLASS 1E DASHED LINES ARE NOT CLASS 1E.)
INDICATES COMPUTER INPUT (NOTE - COMPUTER INPUTS ENCLOSED IN CLASS 1E DASHED LINES ARE NOT CLASS 1E.)
INDICATES CONTROL FLUID AT 114 PSIG
INDICATES FLUID DRAIN
INDICATES WATER LINE
INDICATES STEAM LINE
INDICATES CONTROL FLUID LINE
INDICATES ELECTRICAL SIGNAL FLOW
NOTES:
1. 'SER' INPUTS WHERE SHOWN HAVE RETRANSMITTING CONTACTS FOR ALARM.
2. SEE REF 2 AND 3 DRAWINGS FOR ADDITIONAL DETAILS AND DEFINITIONS OF P6, P7, P8, AND P10.
3. DASHED LINE IS CLASS 1E EQUIPMENT ENCLOSED INSIDE DASHED LINE IS CLASS 1E ELECTRICAL EQUIPMENT. (SEE : AND) SYMBOLS
4. GENERATOR PRIMARY WATER TRIP SIGNAL LOGIC IS TWO OUT OF TWO TYPE.
5. OVERSPEED TRIP, THRUST BEARING TRIP AND LOCAL MANUAL TRIP ARE IN HYDRAULIC CIRCUIT.
ABBREVIATIONS
PW - PRIMARY WATER
TDPU, TDDO - TIME DELAY ON PICKUP AND DROPOUT
ATT - AUTO TURBINE TESTER
DO - DRAIN OIL
SER - SEQUENCE OF EVENTS RECORDER
START UP TRANSFORMERS XST2/XST2A TRIPS
TRANSF DIFFERENTIAL RELAY 87/ST2
TRANSF PHASE OC RELAY 50-51/ST2
TRANSF SUDDEN PRESSURE RELAY 63/ST2
6900V SYS GRD OC BACKUP 51G/ST2-X
6900V SYS GRD OC BACKUP 51G/ST2-Y
345 KV E6-W6 BKR RELAYS (PRIMARY)
START UP TRANSF - UNDERVOLT 27/ST2
345 KV E6-W6 BKR RELAYS (BACK-UP)
94-1/ST2
START UP TRANSFORMER LOCKOUT RELAY TRIP 86-1/ST2
94-2/ST2
START UP TRANSFORMER LOCKOUT RELAY TRIP 86-2/ST2
94-1/E6-W6
94-2/E6-W6
CLOSE 6900V BUSES 1A1,1A2,1A3,1A4 GROUND SWITCH GSST2/XST2A
STOP STARTUP TRANSF XST2/XST2A COOLING
TRIP 6900V BUSES 2A1, 2A2 2A3, 2A4 AND 3A1 START UP TRANSF BKRS
TRIP 6900V BUSES 1EA1 1EA2 - START UP TRANSF BKRS
CLOSE 6900V BUSES 1EA1 1EA2 - ALT SOURCE BKRS
CLASS 1E
NON-CLASS 1E
345KV CKT BKRS E6 AND W6 TRIP COIL 1
345KV CKT BKRS E6 AND W6 TRIP COIL 2
UNFILTERED CONTROL FLUID
FILTERED CONTROL FLUID
TO/FRM FILTER/ACCUM
455 PSIG
ACCUMULATORS
CONTROL FLUID PUMPS
CONTROL FLUID SUPPLY
FIGURE GENERATED FOR FSAR ONLY BASED ON DRAWING E1-0022, 22A, 22B, 22C
COMANCHE PEAK N.P.P.
FINAL SAFETY ANALYSIS REPORT
UNITS 1 and 2
TURBINE TRIP LOGIC DIAGRAM
FIGURE 10.2-1
Amendment 104
pe000063.dgn
07-14-2011

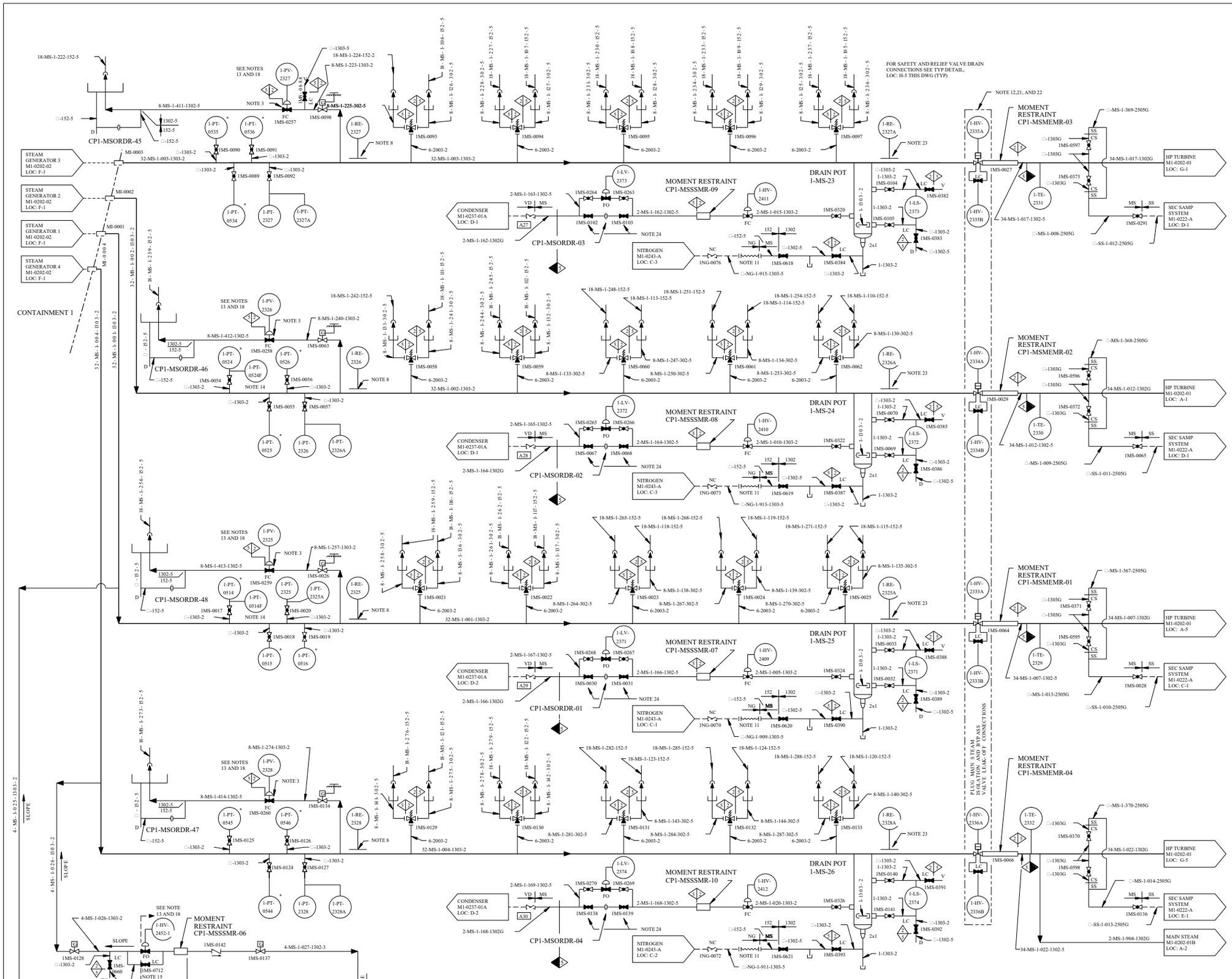

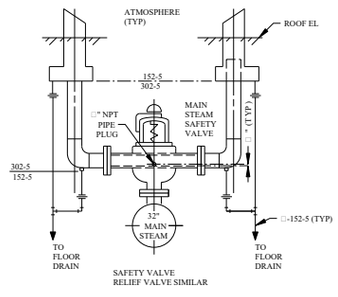

REV	DWN	CHKD	APVD	REMARKS
CP-34	DLK 02-15 2017	MM 02-16 2017	MHF 02-16 2017	THIS DRAWING REVISED TO INCORPORATE AI-TR-2017-001721-1 TO EDITORIALLY CORRECT AIR ACCUMULATOR LOCATION (TAG) NUMBERS.

NOTES:

1. * INSTRUMENT BY WESTINGHOUSE.
2. FOR GENERAL NOTES AND SYMBOLS SEE DRAWING M1-0200.
3. POWER OPR. VALVE SHALL BE LOCATED ON THE HORIZONTAL RUN.
4. ALL NUCLEAR CLASS LINES 2" AND SMALLER WILL HAVE THE SAME PIPE CATEGORY AS THE MAIN RUN LINE UNLESS NOTED OTHERWISE.
5. DELETED
6. A29 REPRESENTS DRAIN CONNECTIONS SHOWN IN DRAWING M1-0237-01.
7. DELETED
8. MAIN STEAM LINE MONITOR DETECTOR ASSEMBLY IS LOCATED BETWEEN THE PORV AND THE FIRST SAFETY VALVE. IT IS A PROXIMITY DEVICE MOUNTED ADJACENT TO THE PIPE.
9. INSTRUMENT AIR SUPPLY FROM SAFEGUARD BUILDING HEADER NUMBER 3-CI-1-090-115-5.
10. UNLESS OTHERWISE NOTED ALL DRAINS COLLECTED BY LOCAL DRAIN SYSTEM.
11. NITROGEN SUPPLY THRU HOSE CONNECTION.
12. MAIN STEAM ISOLATION VALVES AND BYPASS VALVES SUPPLIED BY ROCKWELL.
13. CONTROL VALVE HAS AN ASSOCIATED SAFETY CLASS 3 ACCUMULATOR AS NOTED;

1-HV-2452-2	CP1-CIATMS-02
1-HV-2452-1	CP1-CIATMS-01
1-PV-2327	CP1-MSATRT-03
1-PV-2326	CP1-MSATRT-02
1-PV-2325	CP1-MSATRT-01
1-PV-2328	CP1-MSATRT-04

CP -34

14. REFER TO WESTINGHOUSE DWG 8758D39 SH 13.
15. REFER TO ICD M1-2206-02A, B.
16. DELETED
17. DELETED
18. FOR TYPICAL ARRANGEMENT REFER TO M1-2120-01,-03.
19. DELETED
20. DELETED
21. CAUTION: MAIN STEAM ISOLATION VALVES WILL OPEN UPON LOSS OF POWER TO BOTH TRAIN A AND B HYDRAULIC SOLENOIDS UNLESS AIR OPERATED HYDRAULIC PUMP IS DEACTIVATED. SEE M1-2202-02 FOR LOGIC.
22.

ASSOCIATED MSIV NUM.	TRAIN A HYDR. ISOL. VALVE	TRAIN B HYDR. ISOL. VALVE
1-HV-2333A	1MS-0064A	1MS-0064B
1-HV-2334A	1MS-0029A	1MS-0029B
1-HV-2335A	1MS-0027A	1MS-0027B
1-HV-2336A	1MS-0066A	1MS-0066B

23. STEAM GENERATOR LEAK DETECTOR ASSEMBLY IS LOCATED BETWEEN THE DRIP POT AND MAIN STEAM ISOLATION VALVE. IT IS A PROXIMITY DEVICE MOUNTED ON TOP OF THE PIPE INSULATION.
24. EACH ORIFICE MAY BE ISOLATED USING EITHER MANUAL ISOLATION VALVE DURING NORMAL POWER OPERATION.

FSAR FIGURE 10.3-1

THIS DRAWING CREATED ELECTRONICALLY

DRAWING M1-0202 REV CP-28 HAS BEEN SPLIT INTO THE FOLLOWING SHEETS:
M1-0202
M1-0202-03

CLASS I
(NUCLEAR SAFETY-RELATED)
SAFETY CLASS 1 — SEISMIC CATEGORY I
SAFETY CLASS 2 — CLASS 1E
SAFETY CLASS 3 — ASSOCIATED CIRCUITS

LUMINANT
CPNPP
GLEN ROSE, TEXAS

FLOW DIAGRAM
MAIN STEAM REHEAT
AND STEAM DUMP

DWG. NO.	SH. NO.	REV.
M1-0202	-	CP-34

FINAL PRINT

REF CKD CP-3105/15/98

me378600.dgn A M1-0202 B C D E F G H

REV	DWN	CHK	APVD	REMARKS
CP-22	DLK 06-06-2016	MM 06-06-2016	GAW 06-06-2016	THIS DRAWING REVISED TO INCORPORATE AI-CR-2016-004909-1 TO EDITORIALLY CORRECT LINE SEGMENT NUMBER FROM VD-1-131 TO VD-1-110.

NOTES:

1. * INSTRUMENT BY WESTINGHOUSE.
2. ** BY ACPSI.
3. FOR GENERAL SYMBOLS AND NOTES SEE DRAWING M1-0200.
4. ☐ INDICATES CUSTOMER'S PIPE CONNECTION TO ACPSI SUPPLIED EQUIPMENT.
5. FOR DETAILS OF MSR SEE DRAWING M1-0209 AND M1-0209-A.
6. SLOPED DOWNWARD WITH A 2 FT MINIMUM VERTICAL LEG.
7. ▭ REPRESENTS DRAIN CONNECTIONS SHOWN ON FD M1-0237-01A.
8. DELETED
9. SEAL FLUID TO DRAIN VALVE LANTERN RING IS SUPPLIED FROM THE CONDENSATE SYSTEM. SEE M1-0204, LOC: A/B/C-3.
10. UNLESS OTHERWISE NOTED ALL DRAINS COLLECTED BY LOCAL DRAIN SYSTEM.
11. *** REFER TO ACPSI SPOOL SHEET PIECE PART NUMBERS FOR MATERIAL REQUIREMENTS.

LEGEND:

- MAIN STEAM
- HOT REHEAT (BY ACPSI)
- COLD REHEAT (BY ACPSI)
- AUXILIARY PIPING

FSAR FIGURE 10.3-1

THIS DRAWING CREATED ELECTRONICALLY

DRAWING 2323-M1-0202-01 REV CP-2 HAS BEEN SPLIT INTO THE FOLLOWING SHEETS:
M1-0202-01
M1-0202-01A
M1-0202-01B

NON-SAFETY

LUMINANT
CPNPP
GLEN ROSE, TEXAS

FLOW DIAGRAM
MAIN STEAM REHEAT
AND STEAM DUMP

DWG. NO.	SH. NO.	REV.
M1-0202	01	CP-22

me815300.dgn A M1-0202-01 FINAL PRINT

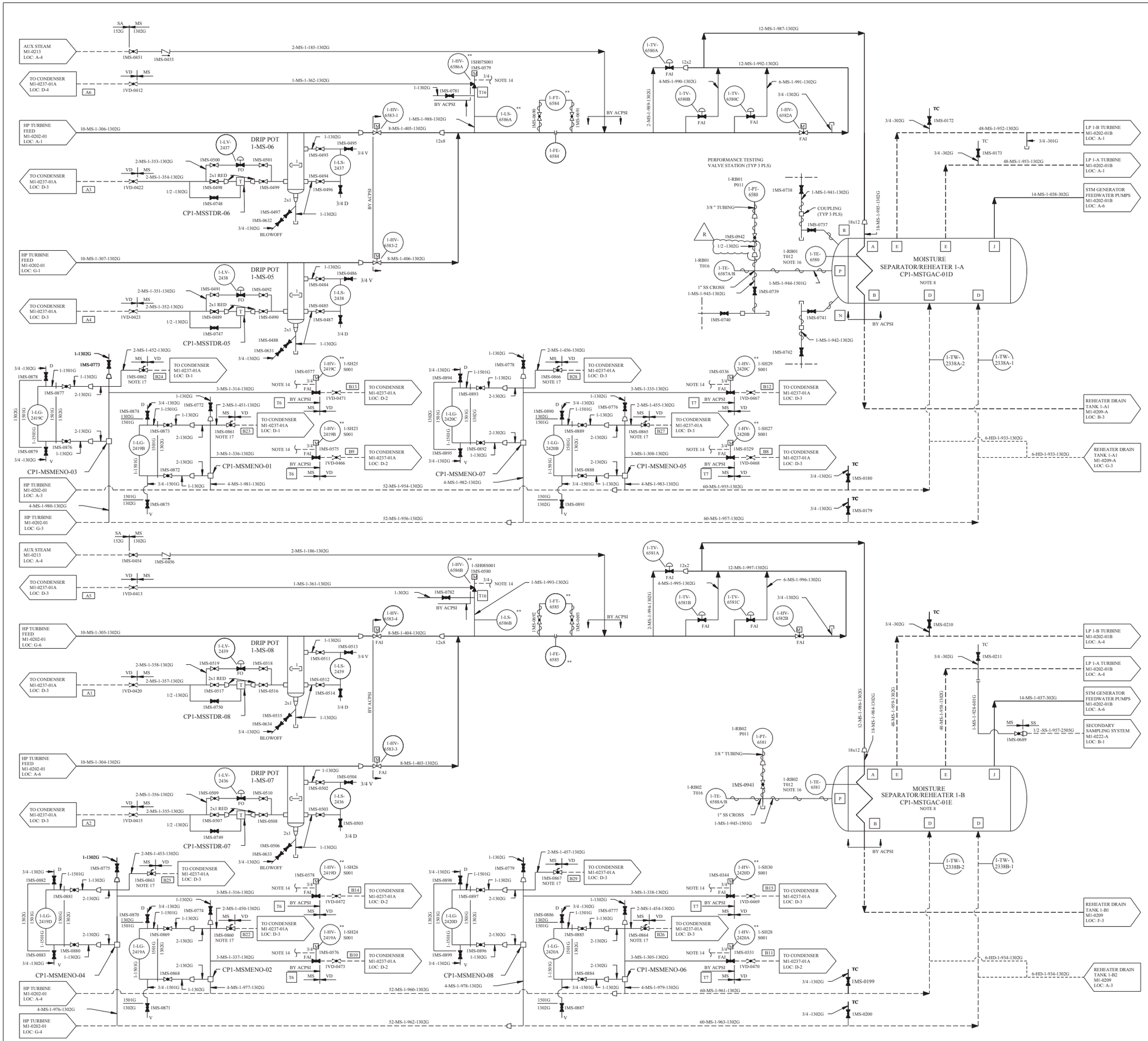

REV	DWN	CHK	APVD	REMARKS
CP-23	DLK 10-05-2011	MM 10-05-2011		THIS DRAWING REVISED TO INCORPORATE DESIGN CHANGE FDA 2011-000159-01-00 PER SK-0002-11-000159-01-00.

NOTES:

1. * INSTRUMENT BY WESTINGHOUSE.
2. ** BY ACPSI
3. FOR GENERAL SYMBOLS AND NOTES SEE DRAWING M1-0200.
4. *** BY GENERAL ELECTRIC.
5. 10X8 REDUCERS ARE WELDED TO THE VALVE BODY BY FISHER CONTROLS.
6. ◯ INDICATES CUSTOMER'S PIPE CONNECTION TO WESTINGHOUSE SUPPLIED CONDENSER.
7. □ INDICATES CUSTOMER'S PIPE CONNECTION TO ACPSI SUPPLIED EQUIPMENT.
8. FOR DETAILS OF MSR SEE DRAWING M1-0209.
9. SLOPED DOWNWARD WITH A 2 FT MINIMUM VERTICAL LEG.
10. ▭ REPRESENTS DRAIN CONNECTIONS SHOWN ON FD M1-0237-01A.
11. ALL I&C CHANNEL NUMBERS WILL HAVE PREFIX ONE (1), IE 1-TE-3229 CONTROLS FOR CHANNEL NUMBERS ABOVE 6000, AS 1-HV-6582 ARE FOUND IN TURBINE INSTRUMENT AND CONTROL DIAGRAMS.
12. ⬡ INDICATES CUSTOMER'S PIPE CONNECTION TO GENERAL ELECTRIC SUPPLIED EQUIPMENT.
13. DELETED
14. SEAL FLUID TO DRAIN VALVE LANTERN RING IS SUPPLIED FROM THE CONDENSATE SYSTEM. SEE M1-0204, LOC: A/B/C-3.
15. UNLESS OTHERWISE NOTED ALL DRAINS COLLECTED BY LOCAL DRAIN SYSTEM.
16. THERMOCOUPLES 1-TE-6580 (1-RB01T012) ARE EMBEDDED NEAR THE INLET STEAM SURFACE OF THE TUBESHEET.
17. VALVE MAY BE THROTTLED AS REQUIRED TO MAINTAIN DESIRED DRAIN LEVEL AT LEVEL GAUGE.

LEGEND:

- MAIN STEAM
- HOT REHEAT (BY ACPSI)
- COLD REHEAT (BY ACPSI)
- AUXILIARY PIPING

FSAR FIGURE 10.3-1

THIS DRAWING CREATED ELECTRONICALLY

DRAWING 2323-M1-0202-01 REV CP-2
HAS BEEN SPLIT INTO THE FOLLOWING SHEETS:

- M1-0202-01
- M1-0202-01A
- M1-0202-01B

NON–SAFETY

LUMINANT
CPNPP
GLEN ROSE, TEXAS

FLOW DIAGRAM
MAIN STEAM REHEAT
AND STEAM DUMP

DWG. NO. M1-0202 | SH. NO. 01A | REV. CP-23

REF CKD CP-14 10/08/00

me103900.dgn A M1-0202-01A B C D E F G FINAL PRINT H

REV	DWN	CHK	APVD	REMARKS
CP-12	BSMC 11-15 2006	DJL 11-17 2006		THIS DRAWING REVISED TO INCORPORATE DESIGN CHANGE FDA-2006-003622-01-00 PER SK-0003-06-003622-01-00.

NOTES

1. DELETED
2. ** BY ACPSI.
3. FOR GENERAL SYMBOLS AND NOTES SEE DRAWING M1-0200.
4. *** BY GENERAL ELECTRIC.
5. 10x8 REDUCERS ARE WELDED TO THE VALVE BODY BY FISHER CONTROLS.
6. ◯ INDICATES CUSTOMER'S PIPE CONNECTION TO WESTINGHOUSE SUPPLIED CONDENSER.
7. □ INDICATES CUSTOMER'S PIPE CONNECTION TO ACPSI SUPPLIED EQUIPMENT.
8. FOR DETAILS OF MSR SEE DRAWING M1-0209.
9. SLOPED DOWNWARD WITH A 2 FT MINIMUM VERTICAL LEG.
10. ▭ REPRESENTS DRAIN CONNECTIONS SHOWN ON F.D. M1-0237-01.
11. ALL I&C CHANNEL NUMBERS WILL HAVE PREFIX ONE (1), i.e. 1-TE-3229. CONTROLS FOR CHANNEL NUMBER ABOVE 6000, AS 1-HV-6582 ARE FOUND IN TURBINE INSTRUMENTATION & CONTROL DIAGRAMS.
12. ⬡ INDICATES CUSTOMER'S PIPE CONNECTION TO GENERAL ELECTRIC SUPPLIED EQUIPMENT.
13. DELETED
14. SEAL FLUID TO DRAIN VALVE LANTERN IS SUPPLIED FROM THE CONDENSATE SYSTEM. SEE M1-0204, LOC: A/B/C-3.
15. UNLESS OTHERWISE NOTED ALL DRAINS COLLECTED BY LOCAL DRAIN SYSTEM.

LEGEND

- MAIN STEAM
- HOT REHEAT (BY ACPSI)
- COLD REHEAT (BY ACPSI)
- AUXILIARY PIPING

DRAWING 2323-M1-0202-01 REV CP-2
HAS BEEN SPLIT INTO THE FOLLOWING SHEETS:
M1-0202 -01
M1-0202-01A
M1-0202-01B

NON–SAFETY

LUMINANT
CPSES
GLEN ROSE, TEXAS

FLOW DIAGRAM
MAIN STEAM REHEAT
AND STEAM DUMP

DWG. NO.	SH. NO.	REV.
M1-0202	01B	CP-12

FSAR FIGURE 10.3-1

THIS DRAWING CREATED ELECTRONICALLY

me741700.dgn A M1-0202-01B

FINAL PRINT

REV	DWN	CHK	APVD	REMARKS
CP-21	MHJ 04-18 2007	DLK 04-18 2007		THIS DRAWING REVISED TO INCORPORATE DESIGN CHANGE FDA-2005-000224-03-00 PER SK-0017-05-000224-03-00.

NOTES:

1. * INSTRUMENT BY WESTINGHOUSE.
2. UNLESS OTHERWISE NOTED ALL DRAINS COLLECTED BY LOCAL DRAIN SYSTEM.
3. FOR GENERAL NOTES AND SYMBOLS SEE DRAWING M1-0200.
4. CUSTOMER'S PIPE CONNECTIONS, AS SUPPLIED BY INDICATED BY ⬡ .
5. ALL NUCLEAR CLASS LINES 2" AND SMALLER WILL HAVE THE SAME PIPE CATEGORY AS THE MAIN RUN LINE UNLESS NOTED OTHERWISE.
6. ALL INSTRUMENT AND CONTROL CHANNEL NUMBERS WILL HAVE PREFIX ONE (1), I.E. 1-TE-2341.
7. DENOTES RADIOACTIVE WASTE MANAGEMENT SYSTEM CONTINUES ON IDENTIFIED DRAWING.
8. ** EQUIPMENT USED IN MITIGATION OF HELB.
9. PIPING CATEGORY SHOWN AS BUILT.
10. DELETED

R (3) DRAWING 6655E34

STEAM GEN 2 TBX-RCPCSG-02

STEAM GEN 1 TBX-RCPCSG-01

STEAM GEN 3 TBX-RCPCSG-03

STEAM GEN 4 TBX-RCPCSG-04

CP1-MSFHMS-02

CP1-MSFHMS-01

CP1-MSFHMS-03

CP1-MSFHMS-04

MOMENT RESTRAINT CP1-MSSSMR-03

MOMENT RESTRAINT CP1-MSSSMR-02

MOMENT RESTRAINT CP1-MSSSMR-01

MOMENT RESTRAINT CP1-MSSSMR-04

PROCESS SAMPLING M1-0228 LOC: A-6

PROCESS SAMPLING M1-0228 LOC: A-5

PROCESS SAMPLING M1-0228 LOC: A-3

PROCESS SAMPLING M1-0228 LOC: A-4

CHEMICAL FEED SYSTEM M1-0221 LOC: F-6

CHEMICAL FEED SYSTEM M1-0221 LOC: E-6

STM GEN BLWDN CLEAN UP SYS M1-0239 LOC: A-3

STM GEN BLWDN CLEAN UP SYS M1-0239 LOC: A-4

STM GEN BLWDN CLEAN UP SYS M1-0239 LOC: A-5

STM GEN BLWDN CLEAN UP SYS M1-0239 LOC: A-3

CONTINUED ON M1-0202 LOC: A-1

CONTINUED ON M1-0202 LOC: A-1

CONTINUED ON M1-0202 LOC: A-2

CONTINUED ON M1-0202 LOC: A-2

2" BLIND FLG

NOTE 7

NOTE 9

FSAR FIGURE 10.3-1

THIS DRAWING CREATED ELECTRONICALLY

CLASS I

(NUCLEAR SAFETY-RELATED)

SAFETY CLASS 1	SEISMIC CATEGORY I
SAFETY CLASS 2	CLASS 1E
SAFETY CLASS 3	ASSOCIATED CIRCUITS

LUMINANT
CPSES
GLEN ROSE, TEXAS

FLOW DIAGRAM
MAIN STEAM REHEAT
AND STEAM DUMP

DWG. NO.	SH. NO.	REV.
M1-0202	02	CP-21

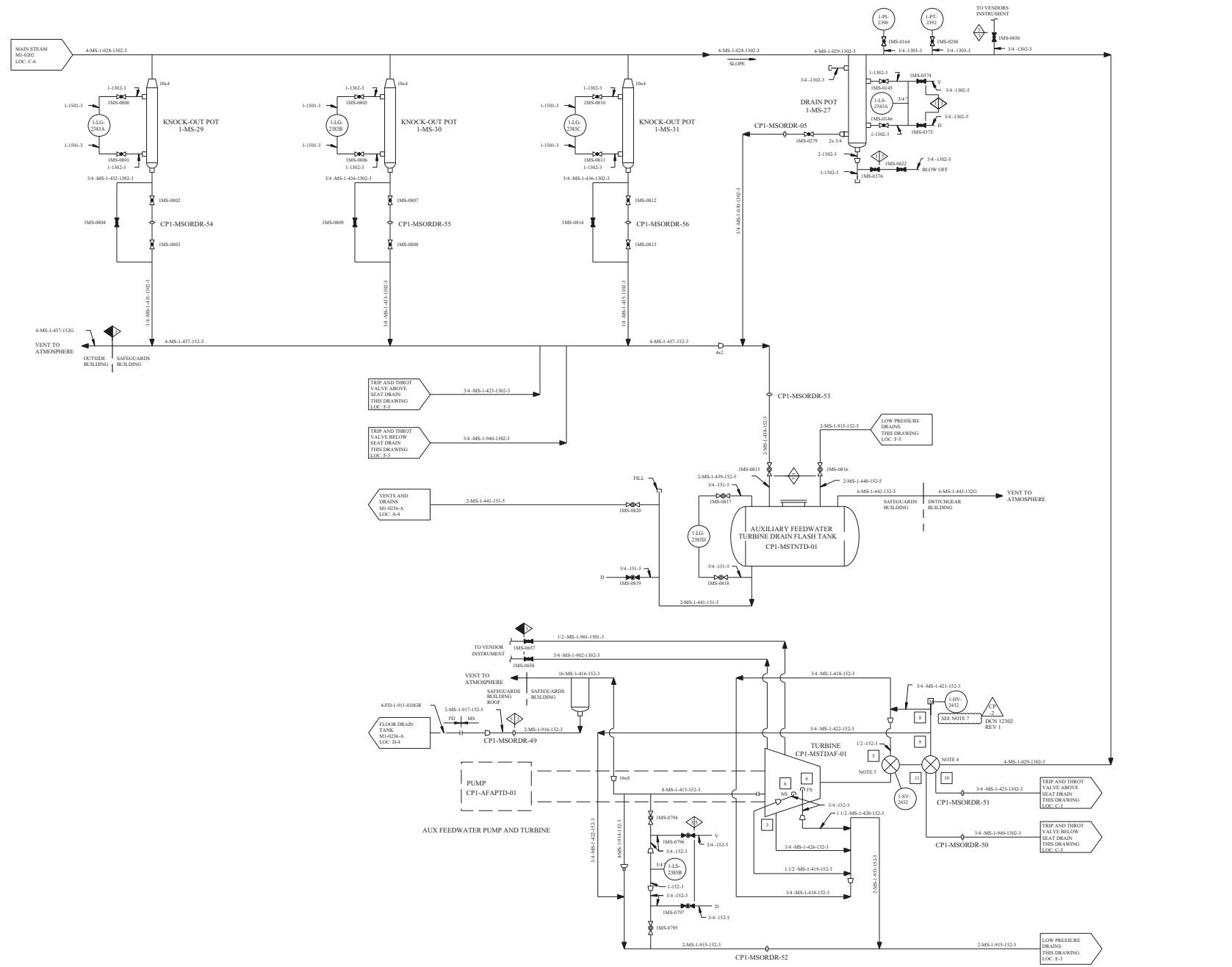

REV	DWN	CHKD	APVD	REMARKS
CP-2	CA 11-17 1999			THIS DRAWING REVISED TO INCORPORATE DESIGN CHANGE DCN 12302 REV 1.

NOTES:

1. FOR GENERAL NOTES AND SYMBOLS SEE DRAWING M1-0200.
2. UNLESS OTHERWISE NOTED ALL DRAINS COLLECTED BY LOCAL DRAIN SYSTEM.
3. 11 REPRESENTS PURCHASER PIPE CONNECTIONS TO TERRY TURBINE.
4. TURBINE TRIP AND THROTTLE VALVE, SUPPLIED BY CP-0007.
5. TURBINE GOVERNER VALVE, SUPPLIED BY CP-0007.
6. THREADED PORTION OF LINES 3/4 -MS-1-421-152-3 AND 3/4 -MS-1-422-152-3 ARE SCH 160 PIPE IN LIEU OF SPECIFIED SCH 80.
7. THE TRIP AND THROTTLE VALVE IS A SOLENOID ACTUATED TRIP VALVE. THE VALVE CAN BE MANUALLY OPENED BY USE OF THE HAND WHEEL. ELECTRICAL POWER TO THE MOTOR OPERATOR HAS BEEN DISCONNECTED.

CP -2
DCN 12302
REV 1

FSAR FIGURE 10.3-1

THIS DRAWING CREATED ELECTRONICALLY

DRAWING M1-0202 REV CP-28
HAS BEEN SPLIT INTO THE FOLLOWING SHEETS:
M1-0202
M1-0202-03

CLASS I
(NUCLEAR SAFETY-RELATED)
SAFETY CLASS 1 SEISMIC CATEGORY I
SAFETY CLASS 2 CLASS 1E
SAFETY CLASS 3 ASSOCIATED CIRCUITS

TXU ELECTRIC
CPSES
GLEN ROSE, TEXAS

FLOW DIAGRAM
MAIN STEAM REHEAT
AND STEAM DUMP

DWG. NO. M1-0202 | SH. NO. 03 | REV. CP-2

SSSSSSDATESSSSSS

me0001xb.dgn

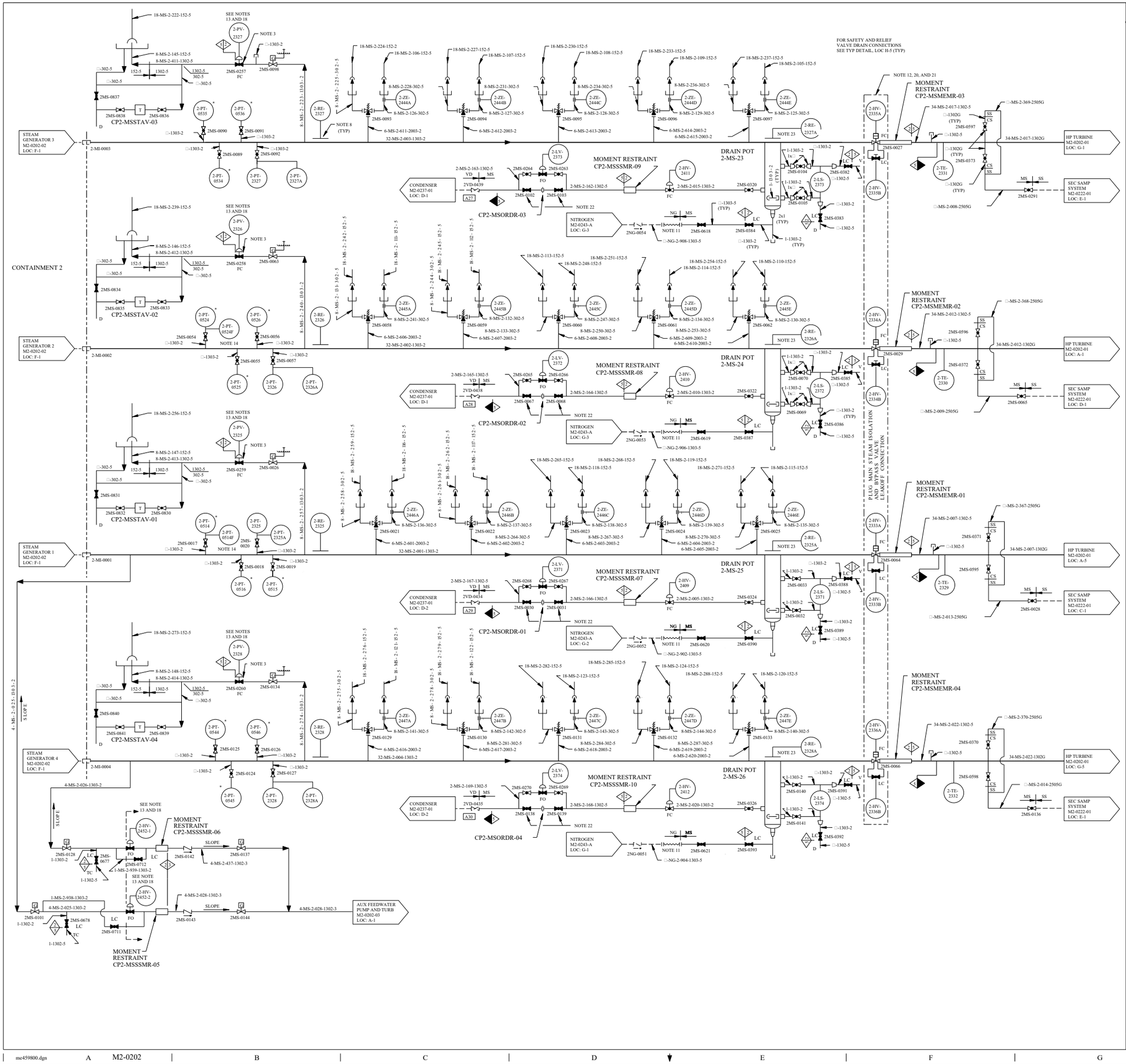

REV	DWN	CHKD	APVD	REMARKS
CP-23	DLK 02-15-2017	MM 02-16-2017	MHF 02-16-2017	THIS DRAWING REVISED TO INCORPORATE AI-TR-2017-001721-1 TO EDITORIALLY CORRECT AIR ACCUMULATOR LOCATION (TAG) NUMBERS.

NOTES:

1. * INSTRUMENT BY WESTINGHOUSE.
2. FOR GENERAL NOTES AND SYMBOLS SEE DRAWING M1-0200.
3. POWER OPR. VALVE SHALL BE LOCATED ON THE HORIZONTAL RUN.
4. ALL NUCLEAR CLASS LINES 2" AND SMALLER WILL HAVE THE SAME PIPE CATEGORY AS THE MAIN RUN LINE UNLESS NOTED OTHERWISE.
5. DELETED
6. A29 REPRESENTS DRAIN CONNECTIONS SHOWN IN DRAWING M2-0237-01.
7. DELETED
8. MAIN STEAM LINE MONITOR DETECTOR ASSEMBLY IS LOCATED BETWEEN THE PORV AND THE FIRST SAFETY VALVE. IT IS A PROXIMITY DEVICE MOUNTED ADJACENT TO THE PIPE.
9. INSTRUMENT AIR SUPPLY FROM SAFEGUARD BUILDING HEADER NUMBER 3-CI-2-090-115-5.
10. UNLESS OTHERWISE NOTED ALL DRAINS COLLECTED BY LOCAL DRAIN SYSTEM.
11. NITROGEN SUPPLY THRU HOSE CONNECTIONS.
12. MAIN STEAM ISOLATION VALVES AND BYPASS VALVES SUPPLIED BY ROCKWELL.
13. CONTROL VALVE HAS AN ASSOCIATED SAFETY CLASS 3 ACCUMULATOR AS NOTED;

2-HV-2452-2	CP2-CIATMS-02
2-HV-2452-1	CP2-CIATMS-01
2-PV-2327	CP2-MSATRT-03
2-PV-2326	CP2-MSATRT-02
2-PV-2325	CP2-MSATRT-01
2-PV-2328	CP2-MSATRT-04

CP-23

14. REFER TO WESTINGHOUSE DWG. 875SD39 SH. 13.
15. DELETED
16. DELETED
17. DELETED
18. FOR TYPICAL ARRANGEMENT REFER TO M1-2120-01, 03.
19. DELETED
20. CAUTION: MAIN STEAM ISOLATION VALVES WILL OPEN UPON LOSS OF POWER TO BOTH TRAIN A AND TRAIN B HYDRAULIC SOLENOIDS UNLESS AIR OPERATED HYDRAULIC PUMP IS DEACTIVATED. SEE M2-2202-02 FOR LOGIC.
21.

ASSOCIATED MSIV NUM.	TRAIN A HYDR. ISOL. VALVE	TRAIN B HYDR. ISOL. VALVE
2-HV-2333A	2MS-0064A	2MS-0064B
2-HV-2334A	2MS-0029A	2MS-0029B
2-HV-2335A	2MS-0027A	2MS-0027B
2-HV-2336A	2MS-0066A	2MS-0066B

22. EACH ORIFICE MAY BE ISOLATED USING EITHER MANUAL ISOLATION VALVE DURING NORMAL POWER OPERATION.
23. STEAM GENERATOR LEAK DETECTOR ASSEMBLY IS LOCATED ABOVE THE DRIP POT. IT IS A PROXIMITY DEVICE MOUNTED ON TOP OF THE PIPE INSULATION.

DRAWING	M2-0202	REV	CP-17
HAS BEEN SPLIT INTO THE FOLLOWING SHEETS:			
M2-0202			
M2-0202-03			

FSAR FIGURE 10.3-1

THIS DRAWING CREATED ELECTRONICALLY

CLASS I
(NUCLEAR SAFETY-RELATED)

SAFETY CLASS 1	SEISMIC CATEGORY I
SAFETY CLASS 2	CLASS 1E
SAFETY CLASS 3	ASSOCIATED CIRCUITS

LUMINANT
CPNPP
GLEN ROSE, TEXAS

FLOW DIAGRAM
MAIN STEAM REHEAT
AND STEAM DUMP

DWG. NO.	SH. NO.	REV.
M2-0202	-	CP-23

REF CKD CP17 1L 1-96

REV	DWN	CHK	APVD	REMARKS
CP-16	DLK 02-18-2009	MM 02-18-2009		THIS DRAWING REVISED TO INCORPORATE DESIGN CHANGE FDA 2009-000538-01-00 PER SK-0001-09-000538-01-00.

NOTES:

1. * INSTRUMENT BY WESTINGHOUSE.
2. ** BY ACPSI.
3. FOR GENERAL SYMBOLS AND NOTES SEE DRAWING M1-0200.
4. DELETE
5. DELETE
6. DELETE
7. ☐ INDICATES CUSTOMER'S PIPE CONNECTION TO ACPSI SUPPLIED EQUIPMENT.
8. FOR DETAILS OF MSR SEE DRAWING M2-0209 AND M2-0209-A.
9. SLOPED DOWNWARD WITH A 2 FT MINIMUM VERTICAL LEG.
10. ▭ REPRESENTS DRAIN CONNECTIONS SHOWN ON FD M2-0237-01.
11. DELETED
12. DELETED
13. DELETED
14. SEAL FLUID TO DRAIN VALVE LANTERN RING IS SUPPLIED FROM THE CONDENSATE SYSTEM. SEE M2-0204, LOC: C/D-4.
15. UNLESS OTHERWISE NOTED ALL DRAINS COLLECTED BY LOCAL DRAIN SYSTEM.
16. *** REFER TO ACPSI SPOOL PIECE PART NUMBERS FOR MATERIAL REQUIREMENTS.

LEGEND:

- MAIN STEAM
- HOT REHEAT (BY ACPSI)
- COLD REHEAT (BY ACPSI)
- AUXILIARY PIPING

FSAR FIGURE 10.3-1

THIS DRAWING CREATED ELECTRONICALLY

DRAWING 2323-M2-0202-01 REV CP-1 HAS BEEN SPLIT INTO THE FOLLOWING SHEETS:

- M2-0202-01
- M2-0202-01A
- M2-0202-01B

NON–SAFETY

LUMINANT
CPNPP
GLEN ROSE, TEXAS

FLOW DIAGRAM
MAIN STEAM REHEAT
AND STEAM DUMP

DWG. NO.	SH. NO.	REV.
M2-0202	01	CP-16

SSSSSSDATFSSSSS

me926600.dgn A M2-0202-01

REV	DWN	CHKD	APVD	REMARKS
CP-13	DLK 06-25 2007	MM 06-25 2007		THIS DRAWING REVISED TO INCORPORATE DESIGN CHANGE FDA 2000-000247-05-00 PER SK-0022-00-000247-05-00.

NOTES:

1. * INSTRUMENT BY WESTINGHOUSE.
2. ** BY ACPSI.
3. FOR GENERAL SYMBOLS AND NOTES SEE DRAWING M1-0200.
4. DELETE
5. 10x8 REDUCERS ARE WELDED TO THE VALVE BODY BY FISHER CONTROLS.
6. DELETE
7. ☐ INDICATES CUSTOMER'S PIPE CONNECTION TO ACPSI SUPPLIED EQUIPMENT.
8. FOR DETAILS OF MSR SEE DRAWING M2-0209.
9. DELETED
10. ☐ REPRESENTS DRAIN CONNECTIONS SHOWN ON FD M2-0237-01.
11. DELETED
12. DELETED
13. DELETED
14. SEAL FLUID TO DRAIN VALVE LANTERN RING IS SUPPLIED FROM THE CONDENSATE SYSTEM. SEE M2-0204, LOC: C/D-4.
15. DELETE
16. THERMOCOUPLES 2-TE-6580 (2-RB01T012) AND 2-TE-6581 (2-RB02T012) ARE EMBEDDED NEAR THE INLET STEAM SURFACE OF THE TUBESHEET.
17. *** REFER TO ACPSI SPOOL PIECE PART NUMBERS FOR MATERIAL REQUIREMENTS.
18. VALVE MAY BE THROTTLED AS REQUIRED TO MAINTAIN DESIRED DRAIN LEVEL AT LEVEL GAUGE.

LEGEND

- MAIN STEAM
- HOT REHEAT (BY ACPSI)
- COLD REHEAT (BY ACPSI)
- AUXILIARY PIPING

DRAWING 2323-M2-0202-01 REV CP-1
HAS BEEN SPLIT INTO THE FOLLOWING SHEETS:

- M2-0202-01
- M2-0202-01A
- M2-0202-01B

NON–SAFETY

LUMINANT
CPSES
GLEN ROSE, TEXAS

FLOW DIAGRAM
MAIN STEAM REHEAT
AND STEAM DUMP

DWG. NO. M2-0202 | SH. NO. 01A | REV. CP-13

FSAR FIGURE 10.3-1

THIS DRAWING CREATED ELECTRONICALLY

REF CHKD CP-11 10/04/00

me873800.dgn M2-0202-01A FINAL PRINT

REV	DWN	CHKD	APVD	REMARKS
CP-8	JRMC 09-12 2007	DJL 09-13 2007		THIS DRAWING REVISED TO INCORPORATE DESIGN CHANGE FDA-2007-000138-01-00 PER SK-0003-07-000138-01-00.

NOTES

1. DELETED
2. ** BY ACPSI.
3. FOR GENERAL SYMBOLS AND NOTES SEE DRAWING M1-0200.
4. *** BY GENERAL ELECTRIC.
5. 10x8 REDUCERS ARE WELDED TO THE VALVE BODY BY FISHER CONTROLS.
6. ◯ INDICATES CUSTOMER'S PIPE CONNECTIONS TO WESTINGHOUSE SUPPLIED CONDENSER.
7. □ INDICATES CUSTOMER'S PIPE CONNECTION TO ACPSI SUPPLIED EQUIPMENT.
8. FOR DETAILS OF MSR SEE DRAWING M2-0209-0.
9. SLOPED DOWNWARD WITH A 2 FT MINIMUM VERTICAL LEG.
10. ▭ REPRESENTS DRAIN CONNECTIONS SHOWN ON FD M2-0237-01.
11. ALL I&C CHANNEL NUMBERS WILL HAVE PREFIX TWO (2), i.e. 2-TE-3229. CONTROLS FOR CHANNEL NUMBERS ABOVE 6000, AS 2-HV-6582, ARE FOUND IN TURBINE INSTRUMENTATION & CONTROL DIAGRAMS.
12. ⬡ INDICATES CUSTOMER'S PIPE CONNECTION TO GENERAL ELECTRIC SUPPLIED EQUIPMENT.
13. DELETED
14. SEAL FLUID TO DRAIN VALVE LANTERN RING IS SUPPLIED FROM THE CONDENSATE SYSTEM. SEE M2-0204, LOC: C/D-6.
15. UNLESS OTHERWISE NOTED ALL DRAINS COLLECTED BY LOCAL DRAIN SYSTEM.
16. REFER TO ACPSI SPOOL PIECE PART NUMBERS FOR MATERIAL REQUIREMENTS.

LEGEND

- MAIN STEAM
- HOT REHEAT (BY ACPSI)
- COLD REHEAT (BY ACPSI)
- AUXILIARY PIPING

FSAR FIGURE 10.3-1

THIS DRAWING CREATED ELECTRONICALLY

DRAWING 2323-M2-0202-01 REV CP-1
HAS BEEN SPLIT INTO THE FOLLOWING SHEETS:
M2-0202-01
M2-0202-01A
M2-0202-01B

NON–SAFETY

LUMINANT
CPSES
GLEN ROSE, TEXAS

FLOW DIAGRAM
MAIN STEAM REHEAT
AND STEAM DUMP

DWG. NO. M2-0202 | SH. NO. 01B | REV. CP-8

FINAL PRINT

REV	DWN	CHK	APVD	REMARKS
CP-16	DLK 10-10 2005	SDM 10-10 2005		THIS DRAWING REVISED TO INCORPORATE DESIGN CHANGE FDA 2005-003740-01-00 PER SK-0001-05-003740-01-00.

NOTES:
1. DELETED
2. UNLESS OTHERWISE NOTED ALL DRAINS COLLECTED BY LOCAL DRAIN SYSTEM.
3. FOR GENERAL NOTES AND SYMBOLS SEE DRAWING M1-0200.
4. CUSTOMERS PIPE CONNECTIONS, AS SUPPLIED BY WESTINGHOUSE DRAWING 1106362 INDICATED BY ○.
5. ALL NUCLEAR CLASS LINES 2" AND SMALLER WILL HAVE THE SAME PIPE CATEGORY AS THE MAIN RUN LINE UNLESS NOTED OTHERWISE.
6. ALL I&C CHANNEL NUMBERS WILL HAVE PREFIX TWO (2), I.E. 2-TE-2341.
7. DENOTES RADIOACTIVE WASTE MANAGEMENT SYSTEM CONTINUES ON IDENTIFIED DRAWING.
8. ** EQUIPMENT USED IN MITIGATION OF HELB.
9. PIPING CATEGORY SHOWN AS BUILT.

FSAR FIGURE 10.3-1

THIS DRAWING CREATED ELECTRONICALLY

CLASS I
(NUCLEAR SAFETY-RELATED)
SAFETY CLASS 1 — SEISMIC CATEGORY I
SAFETY CLASS 2 — CLASS 1E
SAFETY CLASS 3 — ASSOCIATED CIRCUITS

LUMINANT
CPSES
GLEN ROSE, TEXAS

FLOW DIAGRAM
MAIN STEAM REHEAT
AND STEAM DUMP

DWG. NO. M2-0202 | SH. NO. 02 | REV. CP-16

me623600.dgn | A M2-0202-02 | FINAL PRINT

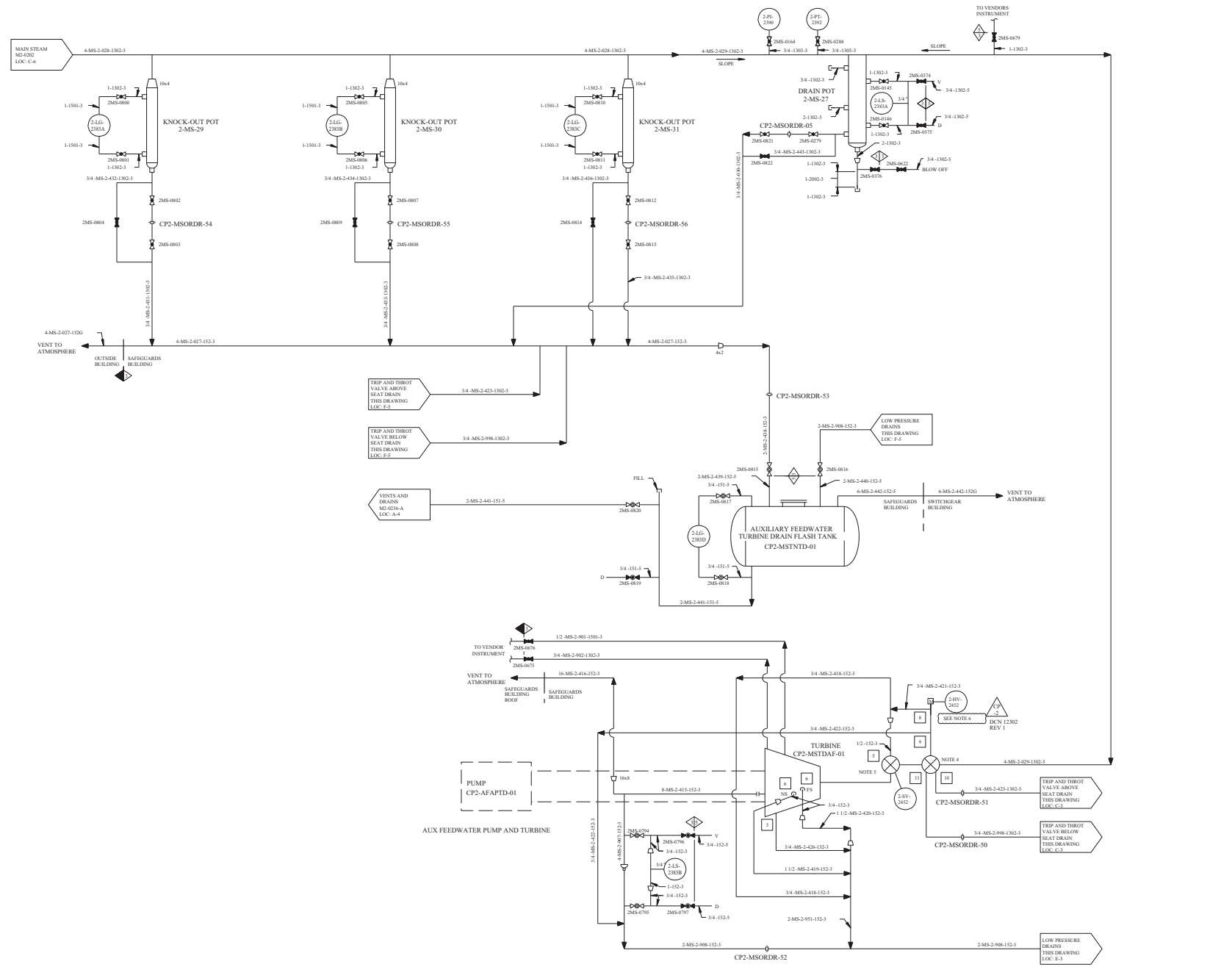

REV	DWN	CHKD	APVD	REMARKS
CP-2	CA 11-17 1999			THIS DRAWING REVISED TO INCORPORATE DESIGN CHANGE DCN 12302 REV 1.

NOTES:

1. FOR GENERAL NOTES AND SYMBOLS SEE DRAWING M1-0200.
2. UNLESS OTHERWISE NOTED ALL DRAINS COLLECTED BY LOCAL DRAIN SYSTEM.
3. 11 REPRESENTS PURCHASER PIPE CONNECTIONS TO TERRY TURBINE.
4. TURBINE TRIP AND THROTTLE VALVE, SUPPLIED BY CP-0007.
5. TURBINE GOVERNER VALVE, SUPPLIED BY CP-0007.
6. THE TRIP AND THROTTLE VALVE IS A SOLENOID ACTUATED TRIP VALVE. THE VALVE CAN BE MANUALLY OPENED BY USE OF THE HAND WHEEL. ELECTRICAL POWER TO THE MOTOR OPERATOR HAS BEEN DISCONNECTED.

CP-2
DCN 12302
REV 1

FSAR FIGURE 10.3-1

THIS DRAWING CREATED ELECTRONICALLY

DRAWING M2-0202 REV CP-17
HAS BEEN SPLIT INTO THE FOLLOWING SHEETS:
M2-0202
M2-0202-03

CLASS I
(NUCLEAR SAFETY-RELATED)
SAFETY CLASS 1 SEISMIC CATEGORY I
SAFETY CLASS 2 CLASS 1E
SAFETY CLASS 3 ASSOCIATED CIRCUITS

TXU ELECTRIC
CPSES
GLEN ROSE, TEXAS

FLOW DIAGRAM
MAIN STEAM REHEAT
AND STEAM DUMP

DWG. NO.	SH. NO.	REV.
M2-0202	03	CP-2

SSSSSSDATESSSSSS

me0001xc.dgn

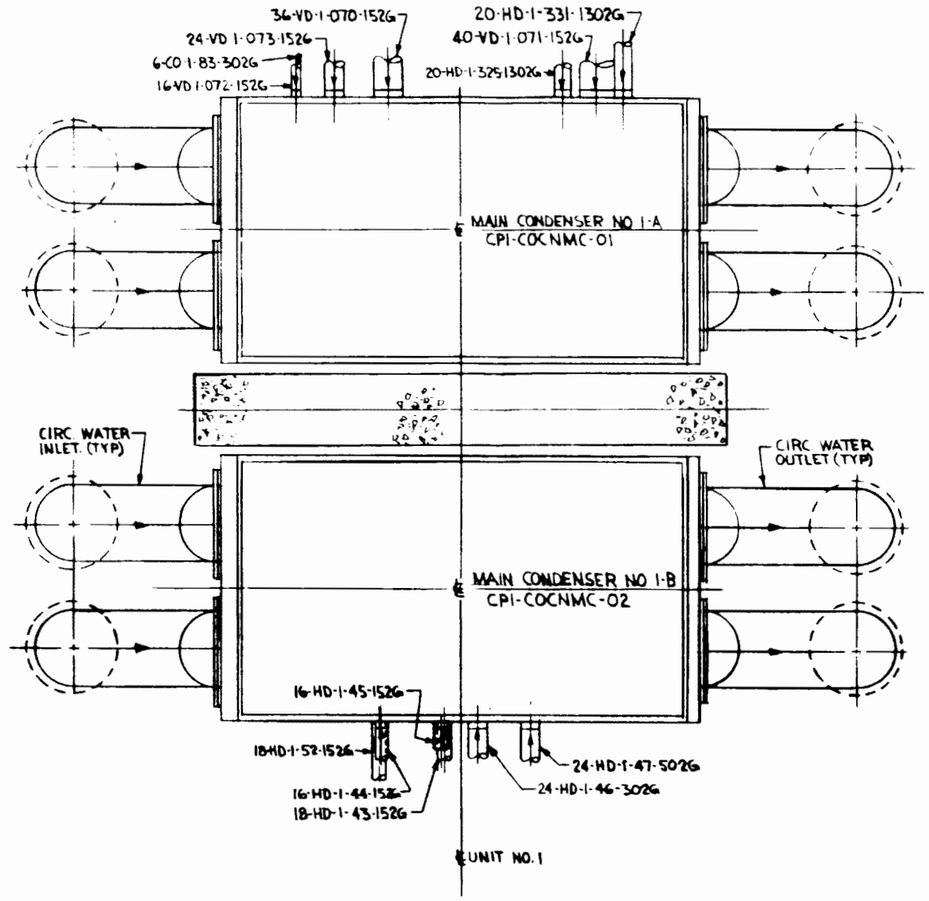

COMANCHE PEAK S.E.S
FINAL SAFETY ANALYSIS REPORT
UNITS 1 and 2

MAIN CONDENSER
PIPING DIAGRAM

FIGURE 10.4-1

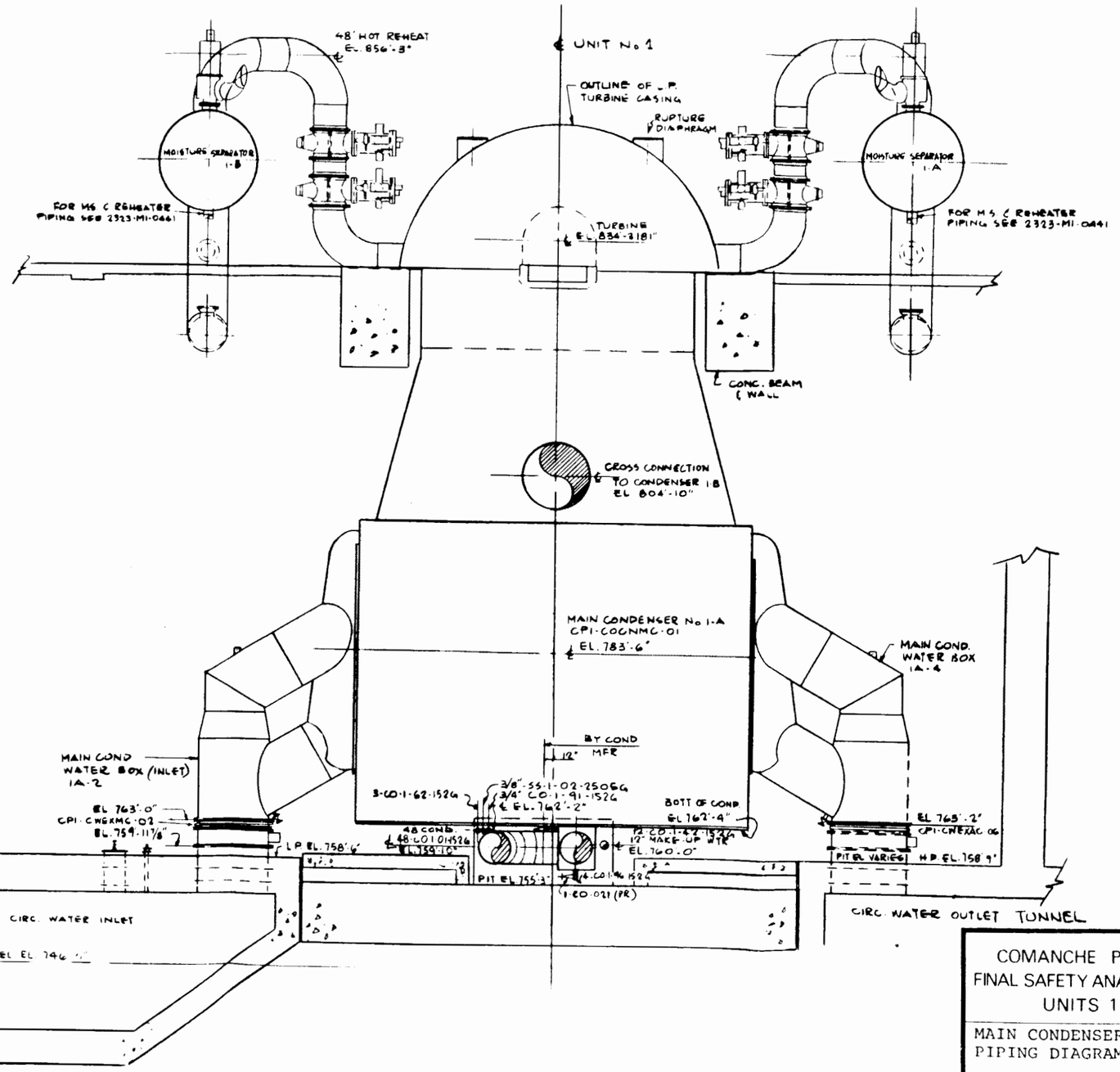

COMANCHE PEAK S.E.S
FINAL SAFETY ANALYSIS REPORT
UNITS 1 and 2

MAIN CONDENSER
PIPING DIAGRAM ELEVATIONS

FIGURE 10.4-2

5/76

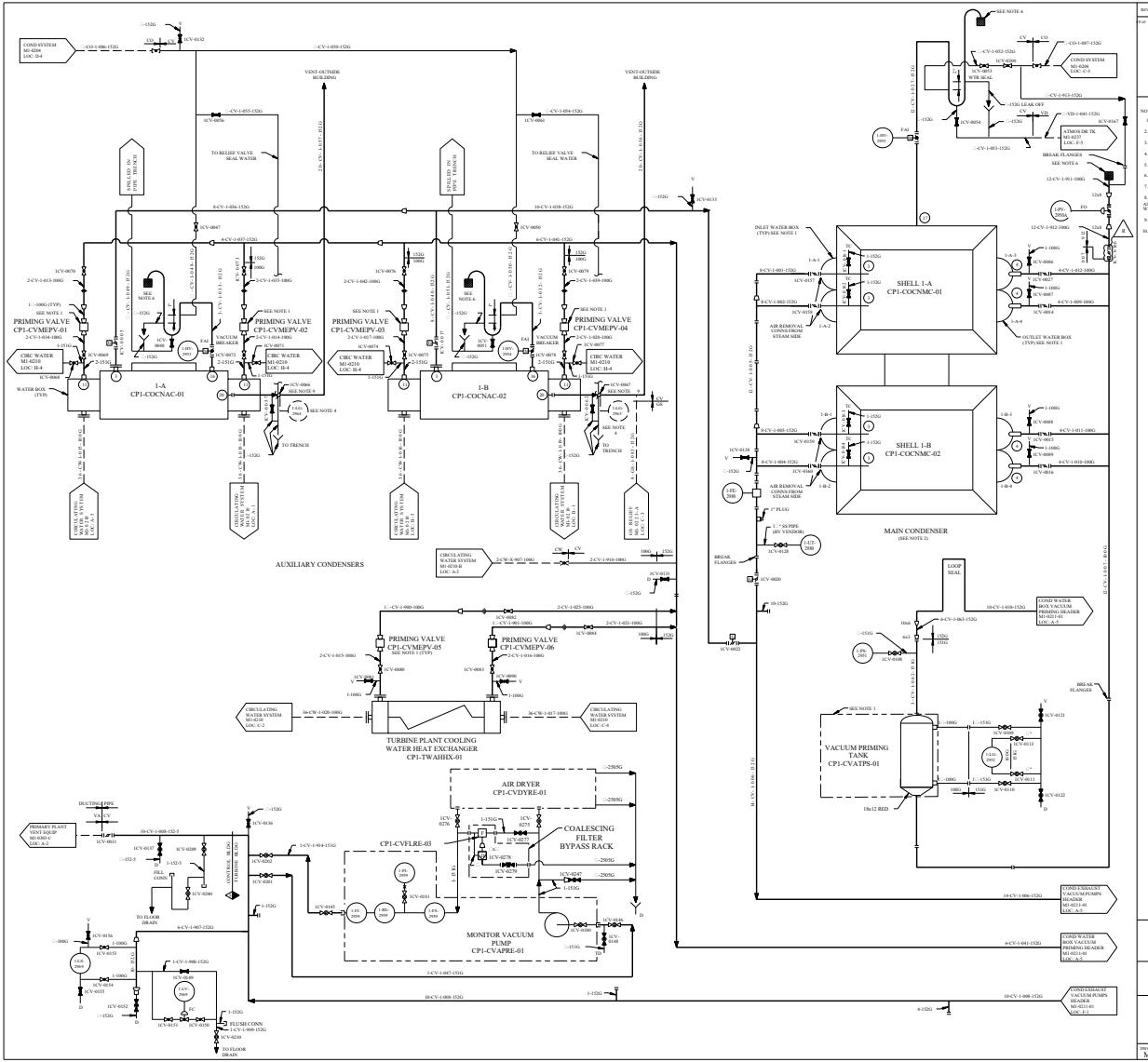
PRIMING VALVE CP1-CVMEPV-01
PRIMING VALVE CP1-CVMEPV-02
PRIMING VALVE CP1-CVMEPV-03
PRIMING VALVE CP1-CVMEPV-04
PRIMING VALVE CP1-CVMEPV-05
PRIMING VALVE CP1-CVMEPV-06
1-A CP1-COCNAC-01
1-B CP1-COCNAC-02
AUXILIARY CONDENSERS
SHELL 1-A CP1-COCNMC-01
SHELL 1-B CP1-COCNMC-02
MAIN CONDENSER
VACUUM PRIMING TANK CP1-CVATPS-01
TURBINE PLANT COOLING WATER HEAT EXCHANGER CP1-TWAHXC-01
AIR DRYER CP1-CVDYRE-01
COALESCING FILTER BYPASS RACK
CP1-CVFLRE-03
MONITOR VACUUM PUMP CP1-CVAPRE-01
LOOP SEAL
BREAK FLANGES
INLET WATER BOX (TYP) SEE NOTE 1
OUTLET WATER BOX (TYP) SEE NOTE 1
AIR REMOVAL CONNS FROM STEAM SIDE
CIRC WATER MI-0210 LOC H-4
CIRCULATING WATER SYSTEM MI-0230 LOC C-3
CIRCULATING WATER SYSTEM MI-0230 LOC C-4
COND SYSTEM MI-0204 LOC D-4
ATMOS DR TK MI-0237 LOC E-5
COND EXHAUST VACUUM PUMPS HEADER MI-0211-01 LOC A-5
COND WATER BOX VACUUM PRIMING HEADER MI-0211-01 LOC A-5
COND EXHAUST VACUUM PUMPS HEADER MI-0211-01 LOC E-5
COND WATER BOX VACUUM PRIMING HEADER MI-0211-01 LOC A-5
PRIMARY PLANT MAKEUP SYSTEM MI-0231 LOC A-2
TO RELIEF VALVE SEAL WATER
TO TRENCH
TO FLOOR DRAIN
VENT-OUTSIDE BUILDING
SEE NOTE 1
SEE NOTE 4
SEE NOTE 6
SEE NOTE 9
SEE NOTE 10
SEE NOTE 11
SEE NOTE 12
SEE NOTE 13
SEE NOTE 14
SEE NOTE 15
SEE NOTE 16
SEE NOTE 17
SEE NOTE 18
SEE NOTE 19
SEE NOTE 20
SEE NOTE 21
SEE NOTE

REV	DWN	CHKD	APVD	REMARKS
CP-22	JESC 10-10 2007	SM 10-11 2007		THIS DRAWING REVISED TO INCORPORATE DESIGN CHANGE FDA 2007-002153-01-00 PER SK-0001-07-002153-01-00.

NOTES:

1. BY CONDENSER VACUUM PUMP SUPPLIER.
2. FOR MECHANICAL SYMBOLS AND NOTES SEE DRAWING M1-0200.
3. ALL VALVE MATERIAL FOR VALVES 2 INCHES AND SMALLER ASSOCIATED WITH PIPING CATEGORY 100G WILL BE BRONZE WITH SCREWED ENDS.
4. TAG NOS. FOR CONDENSER VACUUM PUMP SPEED REDUCERS ARE CP1-CVVPGR-01, CP1-CVVPGR-02 & CP1-CVVPGR-03.
5. ALL DRAINS TO BE COLLECTED BY LOCAL FLOOR DRAIN SYSTEM, UNLESS OTHERWISE NOTED.

CONDENSER EXHAUSTING VACUUM PUMPS

FSAR FIGURE 10.4-3

THIS DRAWING CREATED ELECTRONICALLY

NON–SAFETY

LUMINANT
CPNPP
GLEN ROSE, TEXAS

FLOW DIAGRAM
CONDENSER VACUUM &
WATER BOX PRIMING SYSTEM

DWG. NO.	SH. NO.	REV.
M1-0211	01	CP-22

< FINAL PRINT >

REF CKD CP-15 5/1/98

$$$$$$$DATE$$$$$$

me910200.dgn A M1-0211-01 B C D E F G H

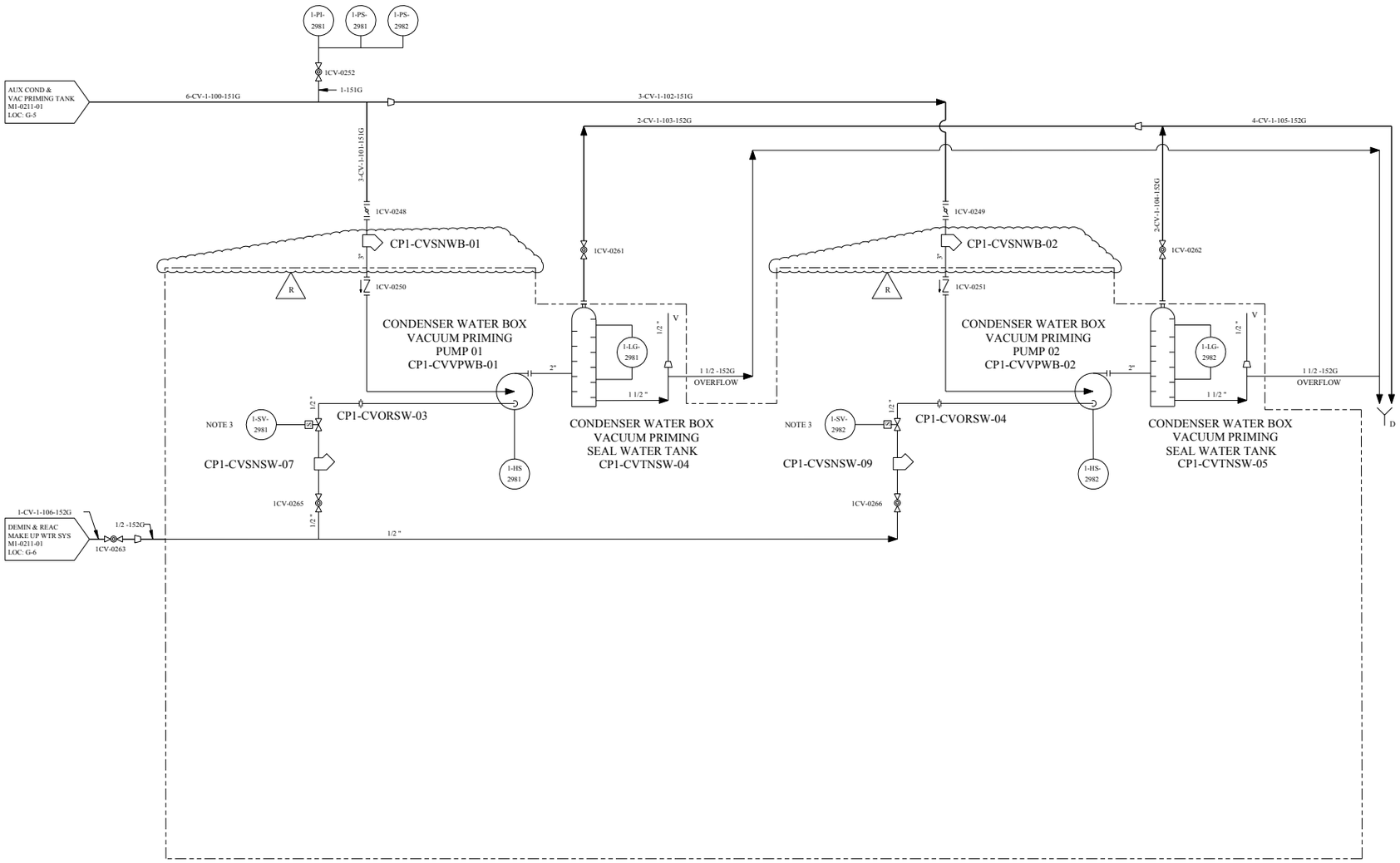

REV	DWN	CHKD	APVD	REMARKS
CP-7	JRMC 10-29 2008	SM 10-29 2008		THIS DRAWING REVISED TO INCORPORATE DESIGN CHANGE FDA-2005-004951-02-01 PER SK-0036-05-004951-02-00.

NOTES:

1. FOR MECH. SYMBOLS AND NOTES SEE DWG. M1-0200.
2. ALL DRAINS TO BE COLLECTED BY LOCAL FLOOR DRAIN SYSTEM, UNLESS OTHERWISE NOTED.
3. SOLENOID VALVE HAS A MANUAL OPERATION FEATURE TO ALLOW OR STOP FLOW WHEN DE-ENERGIZED.

REFERENCE DRAWINGS

1. M1-2211-03 ICD
2. E1-0071-95 SCHEMATIC DIAGRAM
3. 14-9827 VENDOR WIRING DIAGRAM

FSAR FIGURE 10.4-3

THIS DRAWING CREATED ELECTRONICALLY

NON–SAFETY

LUMINANT
CPNPP
GLEN ROSE, TEXAS

FLOW DIAGRAM CONDENSER VACUUM & WATER BOX PRIMING SYSTEM

DWG. NO.	SH. NO.	REV.
M1-0211	02	CP-7

REF CHKD 07-15-2002

$$$$$$$$DATE$$$$$$$$

me906000.dgn M1-0211-02 < FINAL PRINT >

REV	DWN	CHKD	APVD	REMARKS
CP-29	SM 11-10 2009	JRMC 11-10 2009		THIS DRAWING REVISED TO INCORPORATE DESIGN CHANGE FDA 2003-002540-08-00 PER SK-0002-03-002540-08-00.

NOTES:

1. BY CONDENSER VACUUM PUMP SUPPLIER.
2. FOR CONDENSER INSTRUMENTATION SEE DRAWING M2-0210.
3. DELETED
4. DELETED
5. (4) VENDOR CONNECTION NUMBER (TYPICAL).
6. DELETED
7. FOR MECH SYMBOLS AND NOTES SEE DRAWING M1-0200.
8. ALL VALVE MATERIAL FOR VALVES 2" INCHES AND SMALLER ASSOCIATED WITH PIPING CATEGORY '100G WILL BE BRONZE WITH SCREWED ENDS.
9. ALL DRAINS TO BE COLLECTED BY LOCAL FLOOR DRAIN SYSTEM. UNLESS OTHERWISE NOTED.

FSAR FIGURE 10.4-3

THIS DRAWING CREATED ELECTRONICALLY

DRAWING 2323-M2-0211 REV CP-2
HAS BEEN SPLIT INTO THE FOLLOWING SHEETS:
M2-0211
M2-0211-01

CLASS II

LUMINANT
CPNPP
GLEN ROSE, TEXAS

FLOW DIAGRAM
CONDENSER VACUUM AND
WATER BOX PRIMING SYSTEM

DWG. NO. M2-0211 | SH. NO. - | REV. CP-29

REF CHKD 07-24-2002

$$$$$$$$DATE$$$$$$

me962100.dgn M2-0211 < FINAL PRINT >

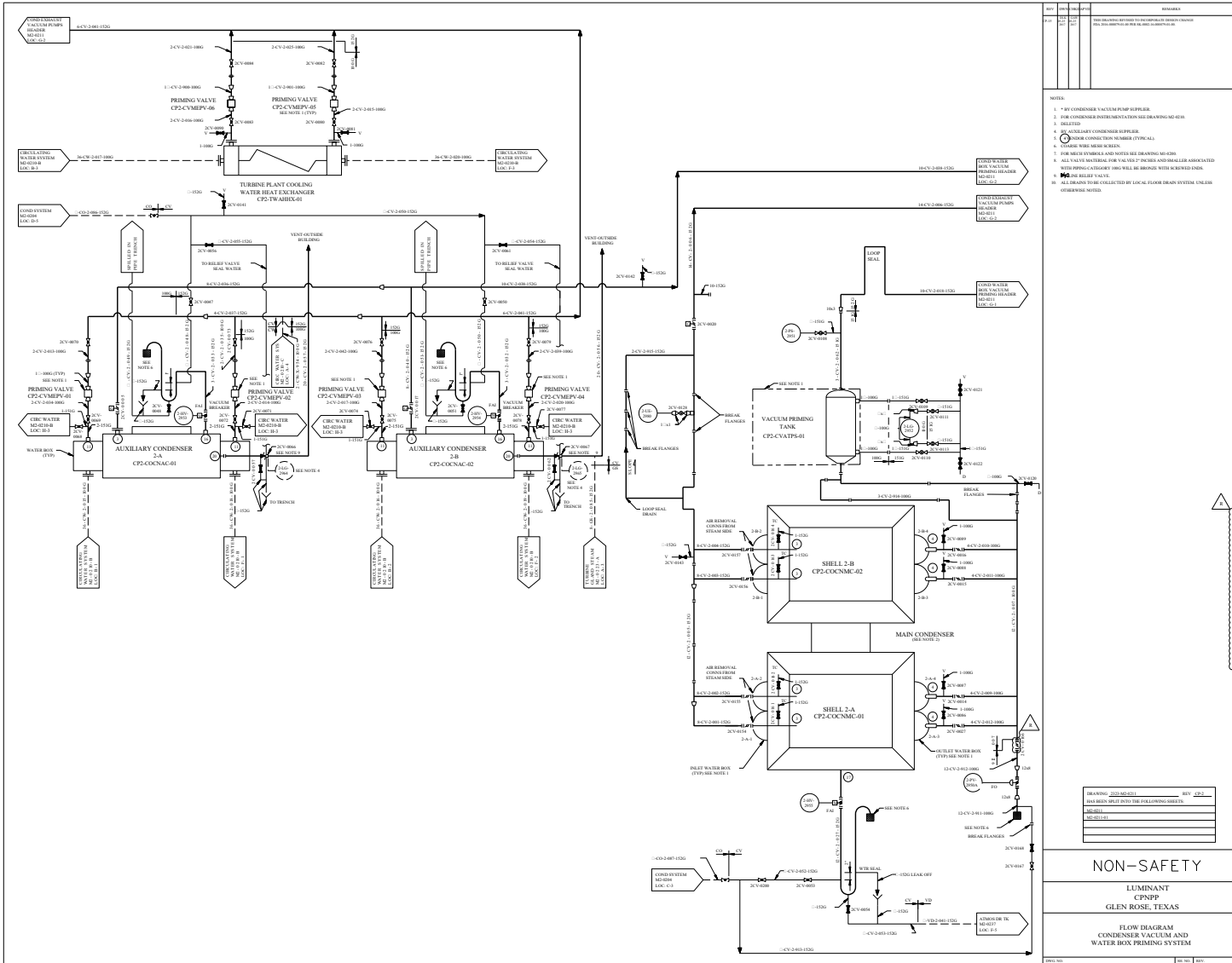

REV	DRWN	DES/ENGR	APP'D	REMARKS
CP-15	MAY 2017	MAY 2017		THIS DRAWING REVISED TO INCORPORATE DESIGN CHANGE FDA-2016-0005793-01 PER DCARD 16-00005793-00.

NOTES:

1. * BY CONDENSER VACUUM PUMP SUPPLIER.
2. FOR CONDENSER INSTRUMENTATION SEE DRAWING M2-0210.
3. DELETED
4. SV AUXILIARY CONDENSER SUPPLIER.
5. (1) INDOR CONNECTION NUMBER (TYPICAL).
6. ⊠ STAINL WIRE MESH SCREEN.
7. FOR MECH SYMBOLS AND NOTES SEE DRAWING M5-0200.
8. ALL VALVE MATERIAL FOR VALVES 2" INCHES AND SMALLER ASSOCIATED WITH PIPING CATEGORY 108G WILL BE BRONZE WITH SCREWED ENDS.
9. ⊠ INE RELIEF VALVE.
10. ALL DRAINS TO BE COLLECTED BY LOCAL FLOOR DRAIN SYSTEM. UNLESS OTHERWISE NOTED.

DRAWING 2323-M2-0211 REV CP-2 HAS BEEN SPLIT INTO THE FOLLOWING SHEETS:
M2-0211
M2-0211-01

FSAR FIGURE 10.4-3

THIS DRAWING CONTAINS LASER SENSITIVE INK

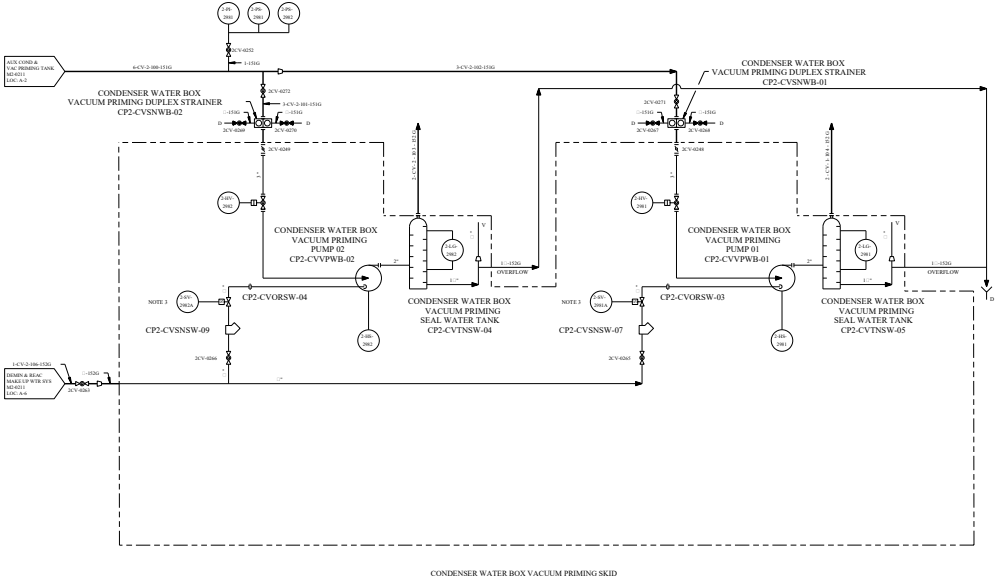

REV	DSN'D	DRN'D	CHK'D	REMARKS
CP-6	TCE 9/28/12	TCE 9/28/12	TMW 9/28/12	THIS DRAWING REVISED HISTORICALLY TO ADD FSAR FIGURE NUMBER

NOTES:

1. FOR MECH SYMBOLS AND NOTES SEE DWG M1-0200.
2. ALL DRAINS TO BE COLLECTED BY LOCAL FLOOR DRAIN SYSTEM, UNLESS OTHERWISE NOTED.
3. SOLENOID VALVE HAS A MANUAL OPERATION FEATURE TO ALLOW OR STOP FLOW WHEN DE-ENERGIZED.

REFERENCE DRAWINGS:

1. M2-2211-03 ICD
2. E2-0071-95 SCHEMATIC DIAGRAM
3. 14-0027 VENDOR WIRING DIAGRAM

FSAR FIGURE 10.4-3

THIS DRAWING CREATED ELECTRONICALLY

NON–SAFETY

LUMINANT
CPNPP
GLEN ROSE, TEXAS

FLOW DIAGRAM
CONDENSER VACUUM AND
WATER BOX PRIMING SYSTEM

DWG. NO.	REV. NO.	REV
M2-0211	02	CP-6

FINAL PRINT

REF: CSKD 07-15-2012 CP-3

REV	DWN	CHKD	APVD	REMARKS
CP-18	GLK 06-02-2005	MM 06-02-2005		THIS DRAWING REVISED TO INCORPORATE DESIGN CHANGE FDA 2004-001830-01-00 PER SK-0001-04-001830-01-00.

NOTES:

1. ALL ITEMS SHOWN IN PHANTOM INSIDE THIS BOUNDARY ARE SUPPLIED BY UPC. SHOWN WITH FULL LINES ARE PROVIDED BY TU ELECTRIC.
2. LOOP SEALS SHALL BE ARRANGED WITH 3 FEET 3.37 INCHES OF VERTICAL LOOP.
3. REPRI SENTS DRAIN CONNECTIONS SHOWN ON DRAWING M1-0237-01A.
4. LOOP SEAL FILL CONNECTIONS (AS NOTED) WILL BE PROVIDED WITH A THREADED CAP FOR LOOP FILL.
5. FOR MECHANICAL SYMBOLS AND NOTES SEE DRAWING M1-0200.

FSAR FIGURE 10.4-4

THIS DRAWING CREATED ELECTRONICALLY

DRAWING 2323-M1-0223 REV CP-5 HAS BEEN SPLIT INTO THE FOLLOWING SHEETS:
M1-0223
M1-0223-A

CLASS II

TXU POWER
CPSES
GLEN ROSE, TEXAS

FLOW DIAGRAM
TURBINE GLAND STEAM SYSTEM

DWG. NO.	SH. NO.	REV.
M1-0223	-	CP-18

FINAL PRINT

REF CKD CP-16 6-23-98

me677000.dgn A M1-0223 B C D E F G H

REV	DWN	CHKD	APVD	REMARKS
CP-9	MHF 06-12-2014	GAW 06-12-2014		THIS DRAWING REVISED TO INCORPORATE DESIGN CHANGE FDA 2005-004990-01-02 PER SK-0003-05-004990-01-02. EDITORIAL CHANGES AS NOTED.

NOTES:

1. ALL ITEMS SHOWN IN PHANTOM INSIDE THIS BOUNDARY ARE SUPPLIED BY G.E. PIPING, INSTRUMENTS, AND VALVES INSIDE THIS BOUNDARY WHICH ARE SHOWN WITH FULL LINES ARE PROVIDED BY TU ELECTRIC.
2. LOOP SEALS SHALL BE ARRANGED WITH 3 FEET 3.37 INCHES OF VERTICAL LOOP.
3. REPRESENTS DRAIN CONNECTIONS SHOWN ON DRAWING M1-0237-01A.
4. LOOP SEAL FILL CONNECTIONS (AS NOTED) WILL BE PROVIDED WITH A THREADED CAP FOR LOOP FILL.
5. FOR MECHANICAL SYMBOLS AND NOTES SEE DRAWING M1-0200.

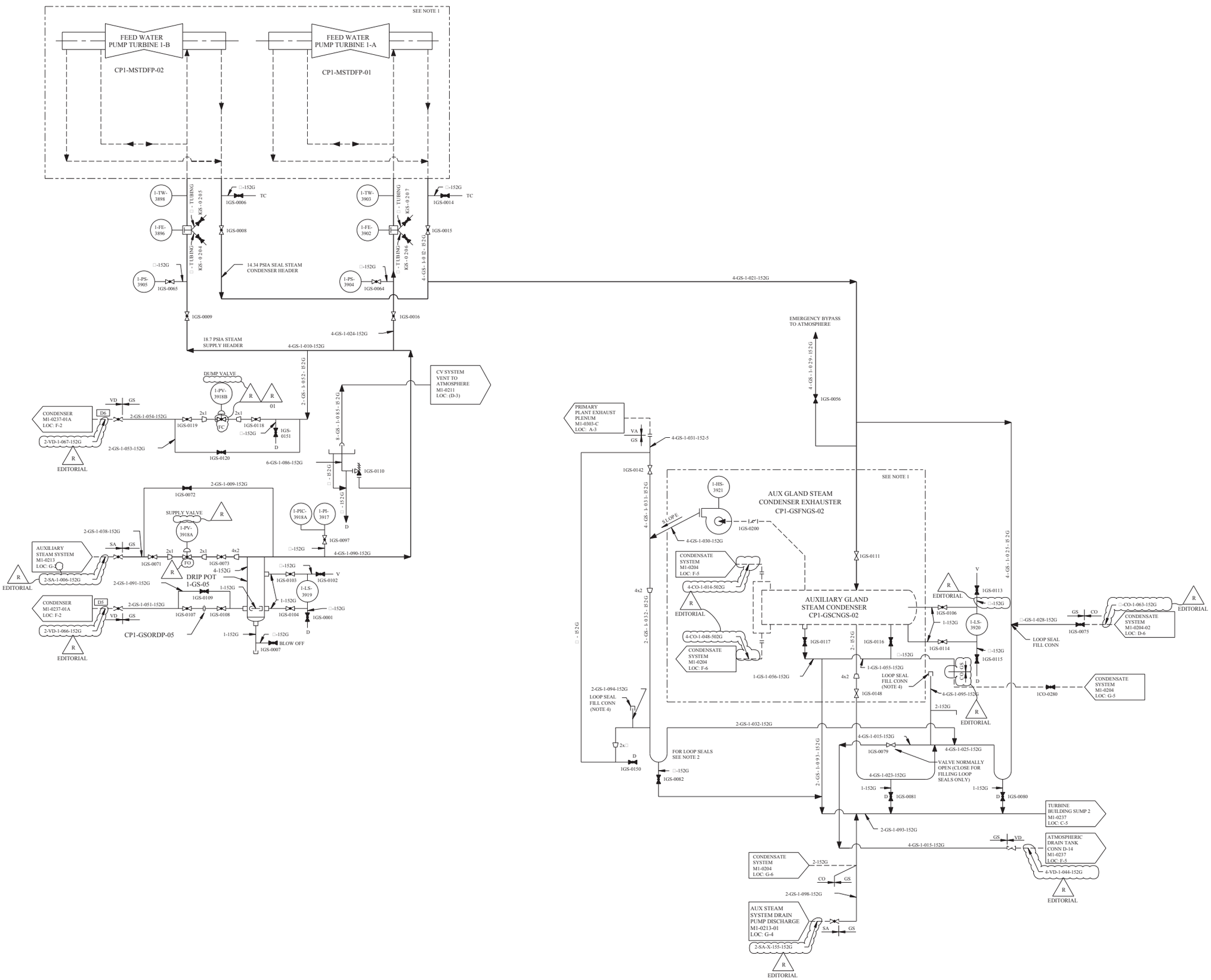

DRAWING 2323-M1-0223 REV CP-5
HAS BEEN SPLIT INTO THE FOLLOWING SHEETS:

M1-0223
M1-0223-A

CLASS II

LUMINANT
CPNPP
GLEN ROSE, TEXAS

FLOW DIAGRAM
TURBINE GLAND STEAM SYSTEM

DWG. NO.	SH. NO.	REV.
M1-0223	A	CP-9

FSAR FIGURE 10.4-4

THIS DRAWING CREATED ELECTRONICALLY

SSSSSSSDATESSSSSS REF CKD CP-6 6-23-98

REV	DWN	CHK	APVD	REMARKS
CP-13	GLK 06-02-2005	MM 06-02-2005		THIS DRAWING REVISED TO INCORPORATE DESIGN CHANGE FDA 2004-001830-01-00 PER SK-0002-04-001830-01-00.

NOTES:

1. ALL ITEMS SHOWN IN PHANTOM INSIDE THIS BOUNDARY WILL BE SUPPLIED BY UPC. INSTRUMENTS AND VALVES INSIDE THIS BOUNDARY WHICH ARE SHOWN IN FULL LINES WILL BE PROVIDED BY TU ELECTRIC.
2. P1 UPC CONNECTION NUMBER (TYPICAL.)
3. LOOP SEALS SHALL BE ARRANGED WITH 3 FEET 3.37 INCHES OF VERTICAL LEG.
4. RP REPRESENTS DRAIN CONNECTIONS SHOWN ON DRAWING M2-0237-01.
5. LOOP SEAL FILL CONNECTIONS WILL BE PROVIDED WITH A THREADED CAP FOR LOOP FILL.
6. UNLESS OTHERWISE NOTED ALL DRAINS TO BE COLLECTED BY LOCAL DRAIN SYSTEM.
7. DELETED
8. FOR MECHANICAL SYMBOLS AND NOTES SEE DRAWING M1-0200.

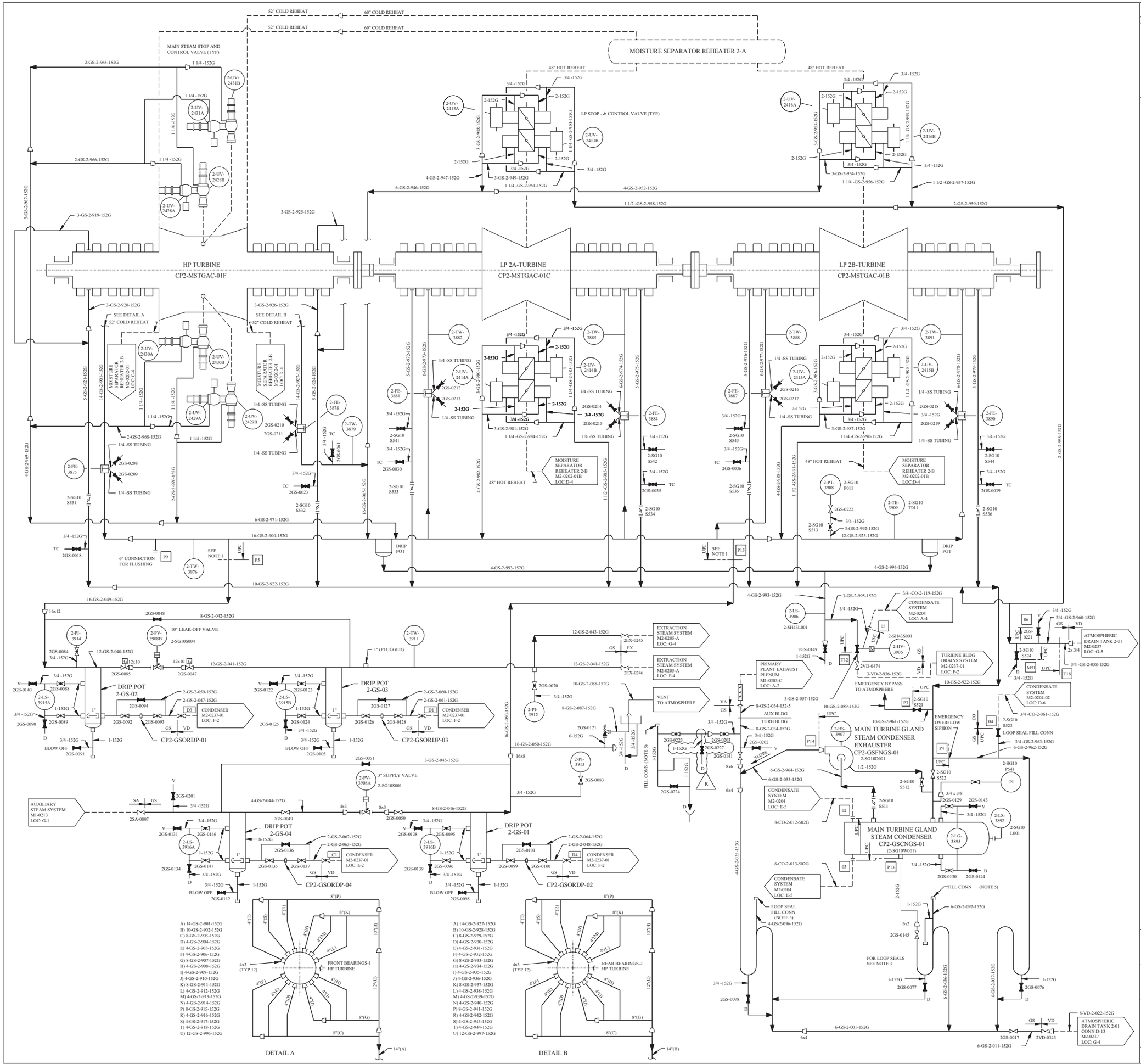

A) 14-GS-2-901-152G
B) 10-GS-2-902-152G
C) 8-GS-2-903-152G
D) 4-GS-2-904-152G
E) 4-GS-2-905-152G
F) 4-GS-2-906-152G
G) 8-GS-2-907-152G
H) 4-GS-2-908-152G
I) 4-GS-2-909-152G
J) 4-GS-2-910-152G
K) 8-GS-2-911-152G
L) 4-GS-2-912-152G
M) 4-GS-2-913-152G
N) 4-GS-2-914-152G
P) 8-GS-2-915-152G
R) 4-GS-2-916-152G
S) 4-GS-2-917-152G
T) 4-GS-2-918-152G
U) 12-GS-2-996-152G

A) 14-GS-2-927-152G
B) 10-GS-2-928-152G
C) 8-GS-2-929-152G
D) 4-GS-2-930-152G
E) 4-GS-2-931-152G
F) 4-GS-2-932-152G
G) 8-GS-2-933-152G
H) 4-GS-2-934-152G
I) 4-GS-2-935-152G
J) 4-GS-2-936-152G
K) 8-GS-2-937-152G
L) 4-GS-2-938-152G
M) 4-GS-2-939-152G
N) 4-GS-2-940-152G
P) 8-GS-2-941-152G
R) 4-GS-2-942-152G
S) 4-GS-2-943-152G
T) 4-GS-2-944-152G
U) 12-GS-2-997-152G

DRAWING 2323-M2-0223 REV CP-2
HAS BEEN SPLIT INTO THE FOLLOWING SHEETS:

M2-0223
M2-0223-A

FSAR FIGURE 10.4-4

THIS DRAWING CREATED ELECTRONICALLY

NON–SAFETY

LUMINANT
CPSES
GLEN ROSE, TEXAS

FLOW DIAGRAM
TURBINE GLAND STEAM SYSTEM

DWG. NO.	SH. NO.	REV.
M2-0223	-	CP-13

REF CKD 1-29-98

REV	DWN	CHK	APVD	REMARKS
CP-8	DLK 01-05-2012	MM 01-13-2012		THIS DRAWING REVISED TO INCORPORATE DESIGN CHANGE FDA 2005-004990-02-00 PER SK-0004-05-004990-02-00. EDITORIAL CHANGES AS NOTED.

NOTES:

1. ALL ITEMS SHOWN IN PHANTOM INSIDE THIS BOUNDARY WILL BE SUPPLIED BY GE. PIPING INSTRUMENTS AND VALVES INSIDE THIS BOUNDARY WHICH ARE SHOWN WITH FULL LINES WILL BE PROVIDED BY TU ELECTRIC.
2. LOOP SEALS SHALL BE ARRANGED WITH 3 FEET 3.37 INCHES OF VERTICAL LEG.
3. RF REPRESENTS DRAIN CONNECTIONS SHOWN ON DRAWING M2-0237-01.
4. LOOP SEAL FILL CONNECTIONS WILL BE PROVIDED WITH A THREADED CAP FOR LOOP FILL. AN ANTI-SIPHON TELL TALE CONNECTION SHALL BE LOCATED 6 INCHES ABOVE THE CENTER LINE OF THE UPPER LOOP.
5. UNLESS OTHERWISE NOTED ALL DRAINS TO BE COLLECTED BY LOCAL DRAIN SYSTEM.
6. DELETED
7. FOR MECHANICAL SYMBOLS AND NOTES SEE DRAWING M1-0200.
8. VALVE 2-PV-3918B ABANDON IN PLACE, REF FDA 2005-004990-02.

R

SEE NOTE 1

FEED WATER PUMP TURBINE 2-B

FEED WATER PUMP TURBINE 2-A

CP2-MSTDFP-02

CP2-MSTDFP-01

2-TW-3898

2-TW-3903

2-FE-3896

2-FE-3902

2-PS-3905

2-PS-3904

□-SS TUBING 2GS-0205

□-SS TUBING 2GS-0207

□-SS TUBING 2GS-0204

□-SS TUBING 2GS-0206

□-152G

TC

2GS-0006

2GS-0014

2GS-0008

2GS-0015

2GS-0065

2GS-0064

14.34 PSIA SEAL STEAM CONDENSER HEADER

4-GS-2-012-152G

4-GS-2-021-152G

2GS-0009

2GS-0016

18.7 PSIA SEAL STEAM SUPPLY HEADER

4-GS-2-024-152G

4-GS-2-010-152G

CV SYSTEM VENT TO ATMOSPHERE M2-0211 LOC: H-4

DUMP VALVE (SEE NOTE 8)

2-PV-3918B

2-GS-2-052-152G

VD

GS

CONDENSER M2-0237-01 LOC: F-1

D6

2-GS-2-054-152G

2x1

2GS-0119

2GS-0118

2-VD-2-158-152G

2-GS-2-053-152G

2GS-0120

2GS-0151

8-GS-2-085-152G

6-GS-2-086-152G

EDITORIAL

2GS-0110

2-GS-2-009-152G

2GS-0072

SUPPLY VALVE

2-PV-3918A

2-GS-2-38-152G

SA

AUXILIARY STEAM SYSTEM M1-0213 LOC: F-1

2GS-0071

2x1

2x1

4x2

2GS-0073

2-SA-2-036-152G

2-GS-2-091-152G

DRIP POT 2-GS-05

2GS-0103

2GS-0102

2-LS-3919

2GS-0109

1-152G

D5

CONDENSER M2-0237-01 LOC: F-2

2-GS-2-051-152G

2GS-0107

2GS-0108

2GS-0104

2GS-0001

2-VD-2-066-152G

CP2-GSORDP-05

BLOW OFF

2GS-0007

2-PIC-3918A

2-PI-3917

2GS-0097

4-GS-2-090-152G

PRIMARY PLANT EXHAUST PLENUM M1-0303-C LOC: A-2

VA

2GS-0226

2GS-0225

2GS-0142

4-GS-2-031-152G

4-GS-2-030-152G

SLOPE

2-HS-3921

2GS-0200

CP2-GSFNGS-02

CONDENSATE SYSTEM M2-0204 LOC: E-5

4-CO-2-014-502G

4x2

4-GS-2-032-152G

GE SCOPE OF SUPPLY (SEE NOTE 1)

AUXILIARY GLAND STEAM CONDENSER CP2-GSCNGS-02

4-CO-2-048-502G

CONDENSATE SYSTEM M2-0204 LOC: E-5

1-GS-2-056-152G

2GS-0117

2GS-0116

2-152G

1-GS-2-055-152G

4x2

4-GS-2-095-152G

2GS-0148

LOOP SEAL FILL CONN (NOTE 4)

2-GS-2-094-152G

LOOP SEAL FILL CONN (NOTE 4)

2x□

2GS-0150

FOR LOOP SEALS SEE NOTE 2

2GS-0082

2-GS-2-032-152G

4-GS-2-015-152G

2GS-0079

4-GS-2-025-152G

VALVE NORMALLY OPEN (CLOSE FOR FILLING LOOP SEALS ONLY)

4-GS-2-023-152G

2-GS-2-093-152G

2GS-0081

2GS-0080

TURBINE BUILDING SUMP NO. 4

CONDENSATE SYSTEM M2-0204 LOC: F-6

2-152G

4-GS-2-015-152G

GS

VD

ATMOSPHERIC DRAIN TANK CONN D-14 M2-0237 LOC: G-5

4-VD-2-044-152G

EMERGENCY BYPASS TO ATMOSPHERE

4-GS-2-029-152G

2GS-0056

4-GS-2-025-152G

2GS-0111

2GS-0106

2GS-0113

V

2-LS-3920

2GS-0114

2GS-0115

LOOP SEAL FILL CONN (NOTE 4)

2-GS-2-028-152G

GS

CO

2GS-0075

LOOP SEAL FILL CONN

CONDENSATE SYSTEM M2-0204-02 LOC: D-6

□-CO-2-063-152G

CONDENSATE SYSTEM M2-0204 LOC: G-5

1-502G

2CO-0280

2-152G

EDITORIAL

DRAWING 2323-M2-0223 REV CP-2

HAS BEEN SPLIT INTO THE FOLLOWING SHEETS:

M2-0223

M2-0223-A

NON—SAFETY

LUMINANT
CPNPP
GLEN ROSE, TEXAS

FLOW DIAGRAM
TURBINE GLAND STEAM SYSTEM

DWG. NO. M2-0223 | SH. NO. A | REV. CP-8

FSAR FIGURE 10.4-4

THIS DRAWING CREATED ELECTRONICALLY

$$$$$$$DATE$$$$$$$

REV	DWN	CHKD	APVD	REMARKS
CP-32	DLK 01-26-2017	MM 01-26-2017	MHF 02-01-2017	THIS DRAWING REVISED TO INCORPORATE AI-TR-2016-008010-20 TO EDITORIALLY CORRECTED OUTFALL NUMBER FROM 101 TO 004. EDITORIAL CHANGE (WMS TO WM) AS NOTED.

NOTES:

1. MANUFACTURERS CONNECTION POINTS ON THE MAIN CONDENSERS ARE REPRESENTED BY ENCIRCLED NUMBERS CORRESPONDING TO THE VENDOR'S DRAWINGS.
4. HEAT EXCHANGER CHANNEL RELIEF VALVE SUPPLIED BY MANUFACTURER.
5. UNLESS OTHERWISE NOTED ALL DRAINS COLLECTED BY LOCAL DRAIN SYSTEM.
6. FOR MECHANICAL NOTES AND SYMBOLS SEE DRAWING M1-0200.

TABLE III

AUX CONDENSERS (DETAIL A)		LG	A	B	C	D
CP1-COCNAC-01	INLET	1-LG-2873	1CV-0068	1CW-0099	1CW-0132	1CW-0133
	OUTLET	1-LG-2874	1CV-0071	1CW-0109	1CW-0134	1CW-0135
CP1-COCNAC-02	INLET	1-LG-2875	1CV-0074	1CW-0110	1CW-0136	1CW-0137
	OUTLET	1-LG-2876	1CV-0077	1CW-0111	1CW-0022	1CW-0026

CONDENSER WATER BOX

DETAIL A

FSAR FIGURE 10.4-5

THIS DRAWING CREATED ELECTRONICALLY

DRAWING 2323-M1-0210 REV CP-10
HAS BEEN SPLIT INTO THE FOLLOWING SHEETS:
M1-0210
M1-0210-A

DRAWING M1-0210 REV CP-13
HAS BEEN SPLIT INTO THE FOLLOWING SHEETS:
M1-0210
M1-0210-B

NON-SAFETY

LUMINANT
CPNPP
GLEN ROSE, TEXAS

FLOW DIAGRAM
CIRCULATING WATER SYSTEM

DWG. NO.	SH. NO.	REV.
M1-0210	-	CP-32

REF CHKD 9-16-2014 CP-31

mc890700.dgn A M1-0210 FINAL PRINT

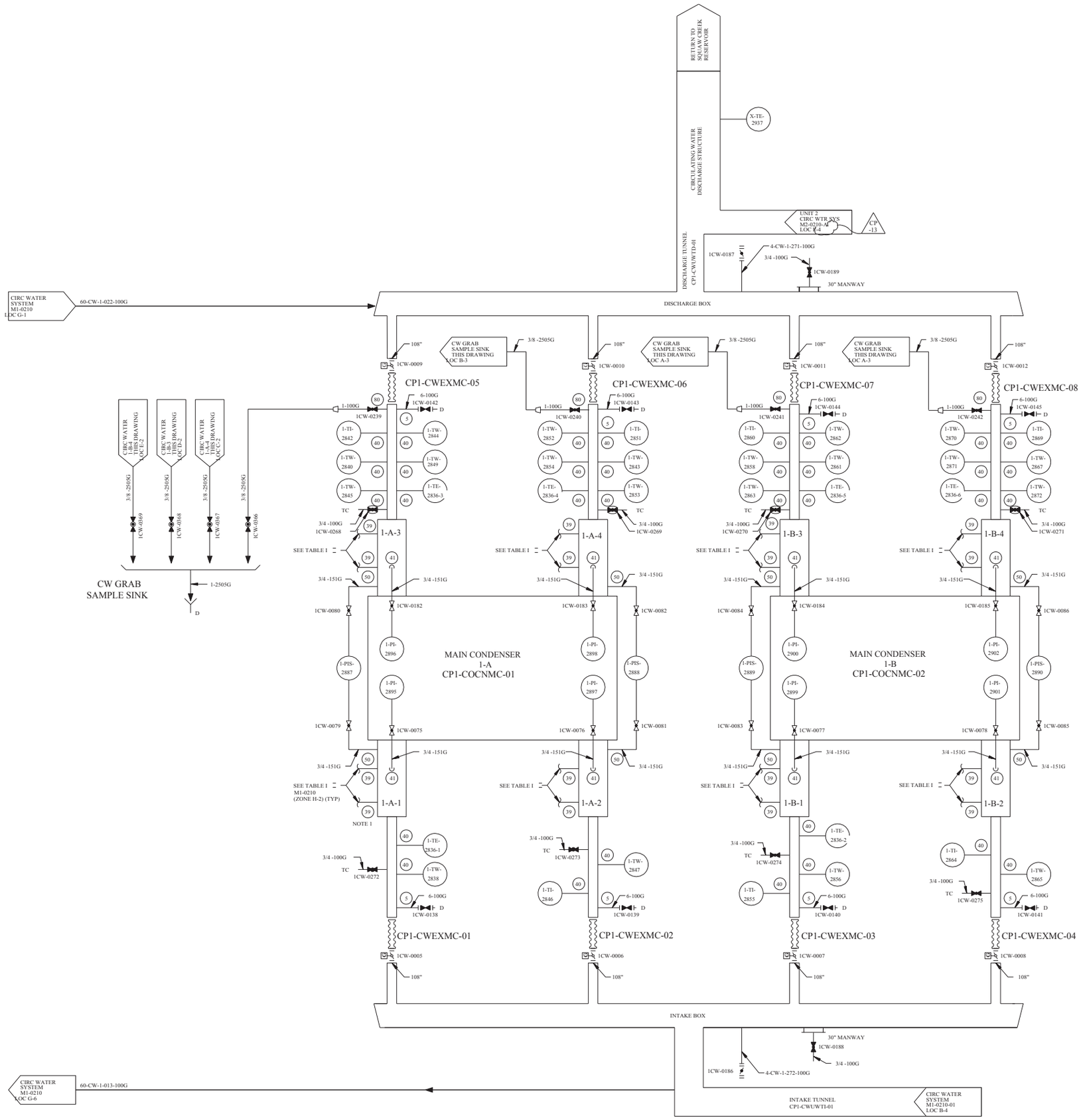

REV	DWN	CHK	APVD	REMARKS
CP-13	DLK 08-17 2010			THIS DRAWING REVISED TO EDITORIALLY CORRECT DRAWING REFERENCE PER CR-2010-007600.

NOTES:

1. MANUFACTURERS CONNECTION POINTS ON THE MAIN CONDENSERS ARE REPRESENTED BY ENCIRCLED NUMBERS CORRESPONDING TO THE VENDOR'S DRAWINGS.
2. UNLESS OTHERWISE NOTED ALL DRAINS COLLECTED BY LOCAL DRAIN SYSTEM.
3. FOR MECHANICAL NOTES AND SYMBOLS SEE DRAWING M1-0200.
4. DELETED

TABLE I

		MAIN CONDENSER (DETAIL "A")							
		CP1-COCNMC-01				CP1-COCNMC-02			
		INLET		OUTLET		INLET		OUTLET	
		1-A-1	1-A-2	1-A-3	1-A-4	1-B-1	1-B-2	1-B-3	1-B-4
LG		1-LG-2877	1-LG-2879	1-LG-2878	1-LG-2880	1-LG-2881	1-LG-2883	1-LG-2882	1-LG-2884
VALVES	A	1CW-0067	1CW-0069	1CW-0087	1CW-0089	1CW-0071	1CW-0073	1CW-0091	1CW-0093
	B	1CW-0068	1CW-0070	1CW-0088	1CW-0090	1CW-0072	1CW-0074	1CW-0092	1CW-0094
	C	1CW-0036	1CW-0038	1CW-0044	1CW-0055	1CW-0120	1CW-0122	1CW-0124	1CW-0126
	D	1CW-0037	1CW-0043	1CW-0054	1CW-0095	1CW-0121	1CW-0123	1CW-0125	1CW-0127

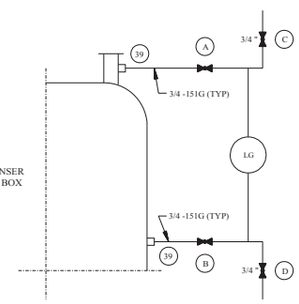

DETAIL "A"

FSAR FIGURE 10.4-5

THIS DRAWING CREATED ELECTRONICALLY

DRAWING 2323-M1-0210 REV CP-10
HAS BEEN SPLIT INTO THE FOLLOWING SHEETS:
M1-0210
M1-0210-A

NON–SAFETY

LUMINANT
CPNPP
GLEN ROSE, TEXAS

FLOW DIAGRAM
CIRCULATING WATER SYSTEM

DWG. NO.	SH. NO.	REV.
M1-0210	A	CP-13

REV	DWN	CHKD	APVD	REMARKS
CP-17	JRMC 04-10-2012	DJL 04-11-2012		THIS DRAWING REVISED TO INCORPORATE DESIGN CHANGE FDA-2012-000048-01-00 PER SK-0001-12-00048-01-00.

NOTES:

1. FOR MECHANICAL NOTES AND SYMBOLS SEE DWG M1-0200.
2. UNLESS OTHERWISE NOTED ALL DRAINS COLLECTED BY LOCAL DRAIN SYSTEM.
3. GRADUATED CALIBRATION CYLINDER.
4. ANTI-SIPHON DEVICE/SURGE SUPPRESSOR BY VENDOR.
5. BASKET STRAINER DESIGNED FOR BACKFLUSH SERVICE. REFERENCE FDA-2008-003750-02.

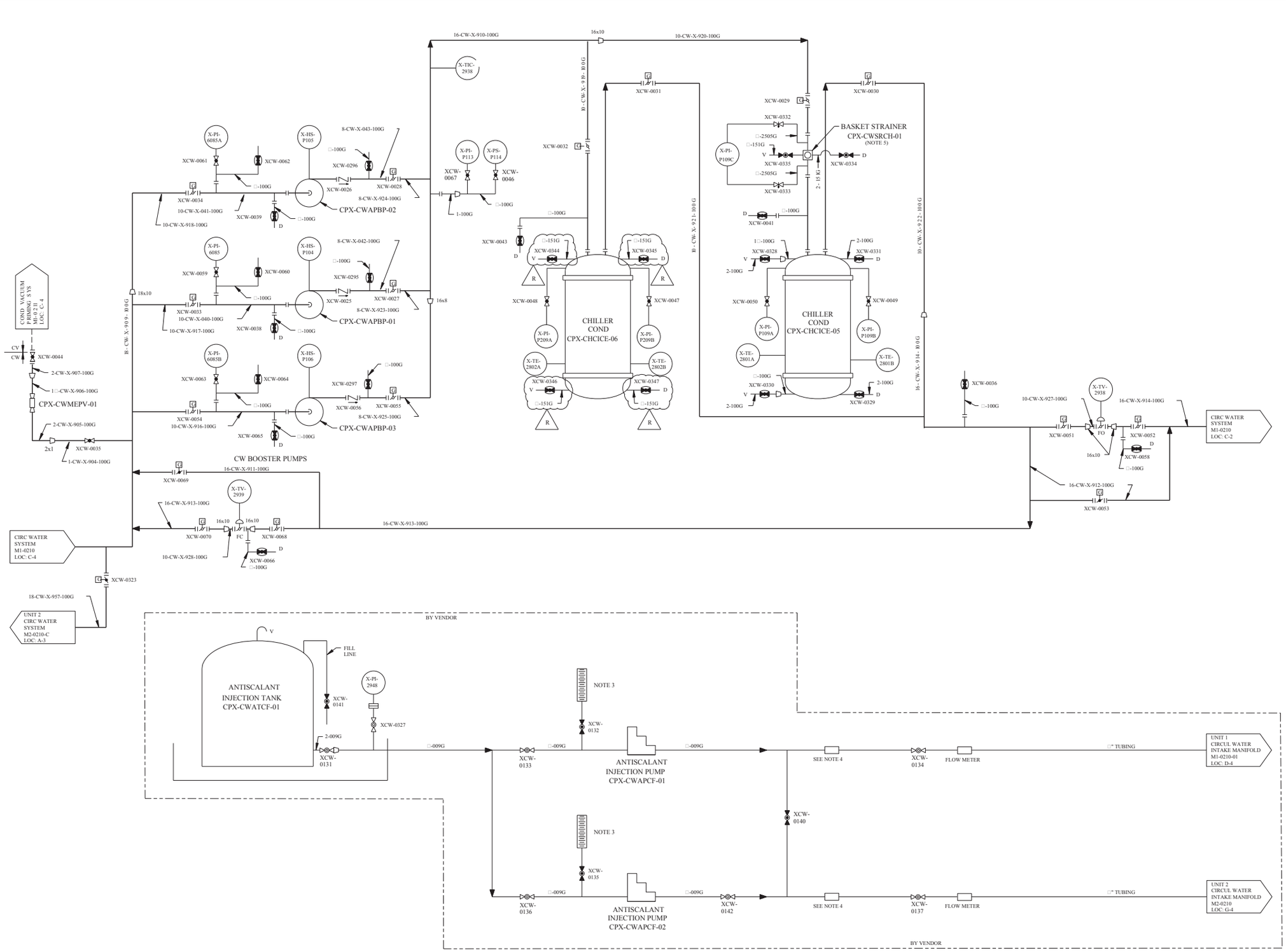

FSAR FIGURE 10.4-5

THIS DRAWING CREATED ELECTRONICALLY

DRAWING M1-0210 REV CP-13
HAS BEEN SPLIT INTO THE FOLLOWING SHEETS:
M1-0210
M1-0210-B

NON-SAFETY

LUMINANT
CPNPP
GLEN ROSE, TEXAS

FLOW DIAGRAM
CIRCULATING WATER SYSTEM

DWG. NO.	SH. NO.	REV.
M1-0210	B	CP-17

$$$$$$$$DATE$$$$$$ REF CKD 04-09-98 CP-9

me991200.dgn A M1-0210-B

< FINAL PRINT >

REV	DWN	CHKD	APVD	REMARKS
CP-40	DLK 11-16 2016	MM 11-22 2016	MBF 12-14 2016	THIS DRAWING REVISED TO INCORPORATE EDITORIAL CHANGES AS NOTED PER AI-TR-2016-009510-1.

NOTES:

1. CIRCULATING WATER PUMP MOTOR BEARING COOLER BY GENERAL ELECTRIC.
2. PRIMING VALVE 1 □*.
3. DELETED
4. SUBMERGED LINES 4-CW-1-261-110G THROUGH 4-CW-1-266-110G TO HAVE EXTERIOR COATING OF PLASITE PRIOR TO INSTALLATION.
5. DELETED
6. UNLESS OTHERWISE NOTED ALL DRAINS COLLECTED BY LOCAL DRAIN SYSTEM.
7. FOR MECHANICAL SYMBOLS AND NOTES SEE DRAWING M1-0200.
8. TUBING TO BE INSTALLED THROUGH BALL VALVE AND SEALED WITH A COMPRESSION FITTING.
9. FOR INSTALLATION DETAIL AS IT RELATES TO HEAT TRACE SEE E1-1500 SHEETS 006 AND 008.
10. BYPASS CONNECTIONS PROVIDED FOR MAINTENANCE OF THE DUPLEX STRAINER USING ENGINEERING REVIEWED PIPING WITH SUITABLE FILTRATION TO ENSURE PROPER FLOW TO THE HEADER.
11. BALL VALVES ARE APPROVED FOR VALVES A, B, C, AND D. (REF FDA-2007-001117-01-00/DCN 09013) UPDATE MEL ONCE THE BALL VALVES ARE INSTALLED.

TABLE II

PIPING AND INSTRUMENTS ON THE CIRCULATING WATER PUMP DISCHARGE SIDE (DETAIL B)				
VALVE	CP1-CWAPCW -01	CP1-CWAPCW -02	CP1-CWAPCW -03	CP1-CWAPCW -04
A	1CW-0219	1CW-0220	1CW-0221	1CW-0222
B	1CW-0223	1CW-0224	1CW-0225	1CW-0226
C	1CW-0227	1CW-0228	1CW-0229	1CW-0230
D	1CW-0231	1CW-0232	1CW-0233	1CW-0234
INSTS LS	1-LS-2812	1-LS-2813	1-LS-2814	1-LS-2815

TABLE IV

TRAVELING SCREEN TAG		ISO VALVE	LINE	FLEX HOSE TAG
CP1-CWTSTS-01	1-HS-2925	1CW-0061	4-CW-1-101-151G	CP1-CWFHSC-01
CP1-CWTSTS-02	1-HS-2926	1CW-0062	4-CW-1-102-151G	CP1-CWFHSC-02
CP1-CWTSTS-03	1-HS-2927	1CW-0063	4-CW-1-103-151G	CP1-CWFHSC-03
CP1-CWTSTS-04	1-HS-2928	1CW-0064	4-CW-1-104-151G	CP1-CWFHSC-04
CP1-CWTSTS-05	1-HS-2929	1CW-0065	4-CW-1-105-151G	CP1-CWFHSC-05
CP1-CWTSTS-06	1-HS-2930	1CW-0066	4-CW-1-106-151G	CP1-CWFHSC-06

DETAIL B

SEE TABLE II FOR TAG NUMBERS

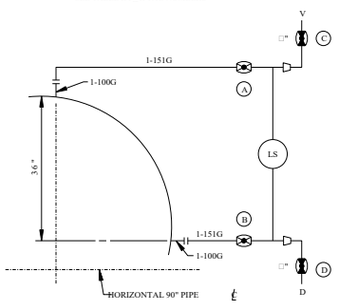

FSAR FIGURE 10.4-5

THIS DRAWING CREATED ELECTRONICALLY

NON-SAFETY

LUMINANT
CPNPP
GLEN ROSE, TEXAS

FLOW DIAGRAM
CIRCULATING WATER SYSTEM

DWG. NO.	SH. NO.	REV.
M1-0210	01	CP-40

FINAL PRINT

REF CHKD 05/10/2001

mc930300.dgn A M1-0210-01

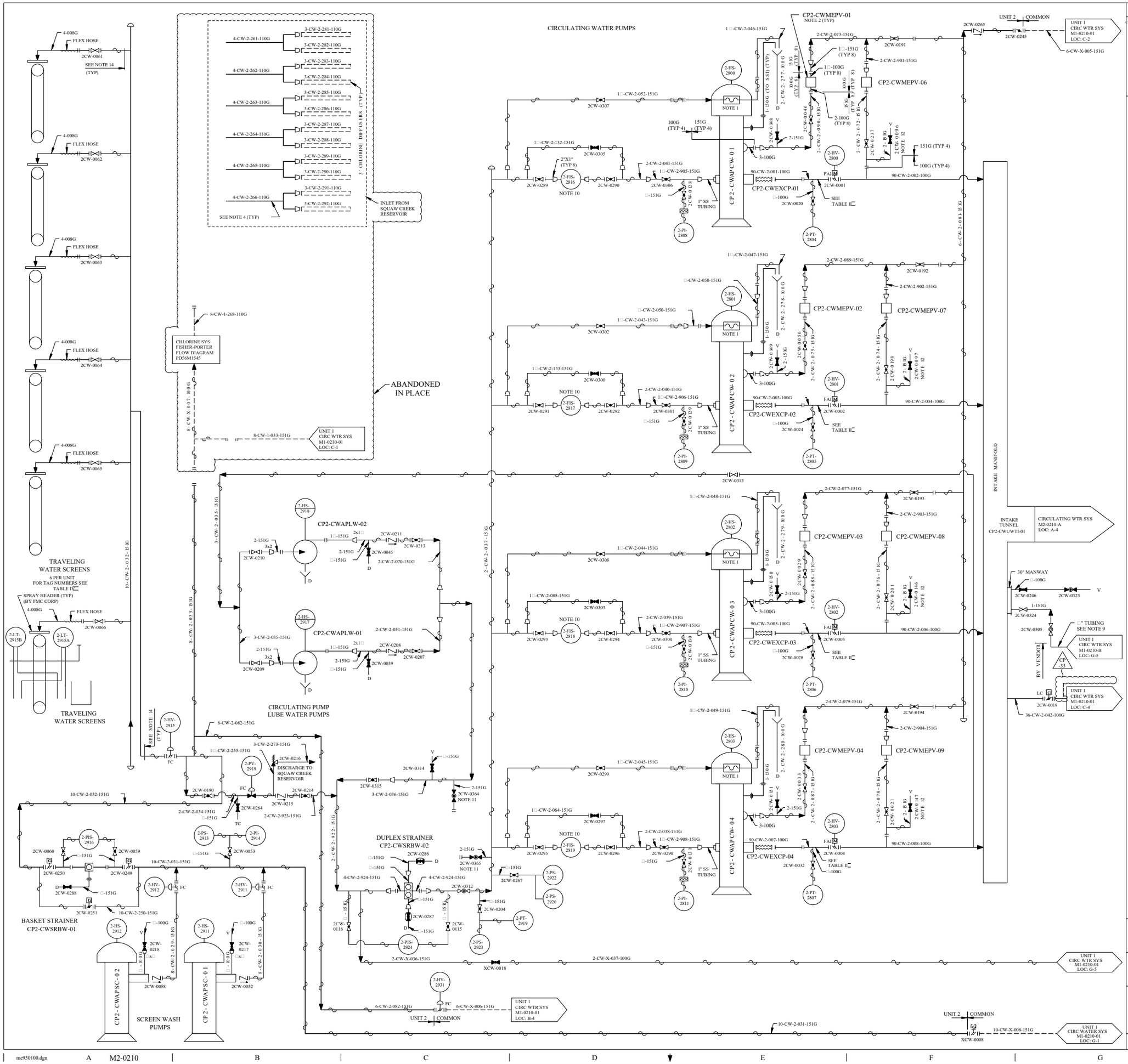

REV	DWN	CHKD	APVD	REMARKS
CP-33	DLK 02-17-2016	MM 02-17-2016	GAW 02-17-2016	THIS DRAWING REVISED TO INCORPORATE AI-CR-2016-001409.1 TO EDITORIALLY REMOVE UNIT 1 LINE NUMBER 36-CW-1-042-100G DOWNSTREAM OF 2CW-0019.

NOTES:

1. CIRCULATING WATER PUMP MOTOR BEARING COOLER BY GENERAL ELECTRIC.
2. PRIMING VALVE 1□.
3. DELETED
4. SUBMERGED LINES 4-CW-2-261-110G THRU 4-CW-2-266-110G TO HAVE EXTERIOR COATING OF PLASITE PRIOR TO INSTALLATION.
5. DELETED
6. FOR MECHANICAL SYMBOLS AND NOTES SEE DRAWING M1-0200.
7. UNLESS OTHERWISE NOTED DRAINS COLLECTED BY LOCAL DRAIN SYSTEM.
8. DELETED
9. TUBING TO BE INSTALLED THROUGH THE VALVE AND SEALED WITH A COMPRESSION FITTING.
10. FOR INSTALLATION DETAIL AS IT RELATES TO HEAT TRACE SEE E2-1506 SHEETS 002, 014, 015 AND 017.
11. BYPASS CONNECTIONS PROVIDED FOR MAINTENANCE OF THE DUPLEX STRAINER USING ENGINEERING REVIEWED PIPING WITH SUITABLE FILTRATION TO ENSURE PROPER FLOW TO THE HEADER.
12. A BLANK FLANGE MAY BE INSTALLED AS REQUIRED PER FDA-2006-003493-01.
13. BALL VALVES ARE APPROVED FOR VALVES A, B, C, AND D. (REF FDA-2007-001117-01-00/DCN 09013) UPDATE MEL ONCE THE BALL VALVES ARE INSTALLED.
14. TRAVELING SCREENS WASH PIPING HEAT TRACE IS REQUIRED ONLY ABOVE THE CWIS DECK.

TABLE II

PIPING AND INSTRUMENTS ON THE CIRCULATING WATER PUMP DISCHARGE SIDE (DETAIL B)					
VALVE		CP2-CWAPCW-01	CP2-CWAPCW-02	CP2-CWAPCW-03	CP2-CWAPCW-04
A		2CW-0219	2CW-0220	2CW-0221	2CW-0222
B		2CW-0223	2CW-0224	2CW-0225	2CW-0226
C		2CW-0227	2CW-0228	2CW-0229	2CW-0230
D		2CW-0231	2CW-0232	2CW-0233	2CW-0234
INSTS	LS	2-LS-2812	2-LS-2813	2-LS-2814	2-LS-2815

TABLE IV

TRAVELING SCREEN TAG		ISO VALVE	LINE	FLEX HOSE TAG
CP2-CWTSTS-01	2-HS-2925	2CW-0061	4-CW-2-101-151G	CP2-CWFHSC-01
CP2-CWTSTS-02	2-HS-2926	2CW-0062	4-CW-2-102-151G	CP2-CWFHSC-02
CP2-CWTSTS-03	2-HS-2927	2CW-0063	4-CW-2-103-151G	CP2-CWFHSC-03
CP2-CWTSTS-04	2-HS-2928	2CW-0064	4-CW-2-104-151G	CP2-CWFHSC-04
CP2-CWTSTS-05	2-HS-2929	2CW-0065	4-CW-2-105-151G	CP2-CWFHSC-05
CP2-CWTSTS-06	2-HS-2930	2CW-0066	4-CW-2-106-151G	CP2-CWFHSC-06

DETAIL B

SEE TABLE II FOR TAG NUMBERS

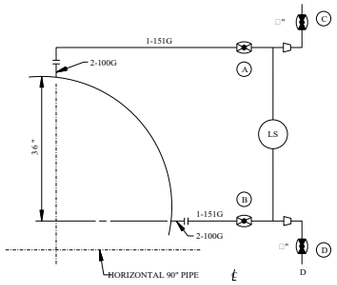

DRAWING 2323-M2-0210 REV CP-3 HAS BEEN SPLIT INTO THE FOLLOWING SHEETS:
M2-0210
M2-0210-A
M2-0210-B
M2-0210-C

FSAR FIGURE 10.4-5

THIS DRAWING CREATED ELECTRONICALLY

NON-SAFETY

LUMINANT
CPNPP
GLEN ROSE, TEXAS

FLOW DIAGRAM
CIRCULATING WATER SYSTEM

DWG. NO.	SH. NO.	REV.
M2-0210	-	CP-33

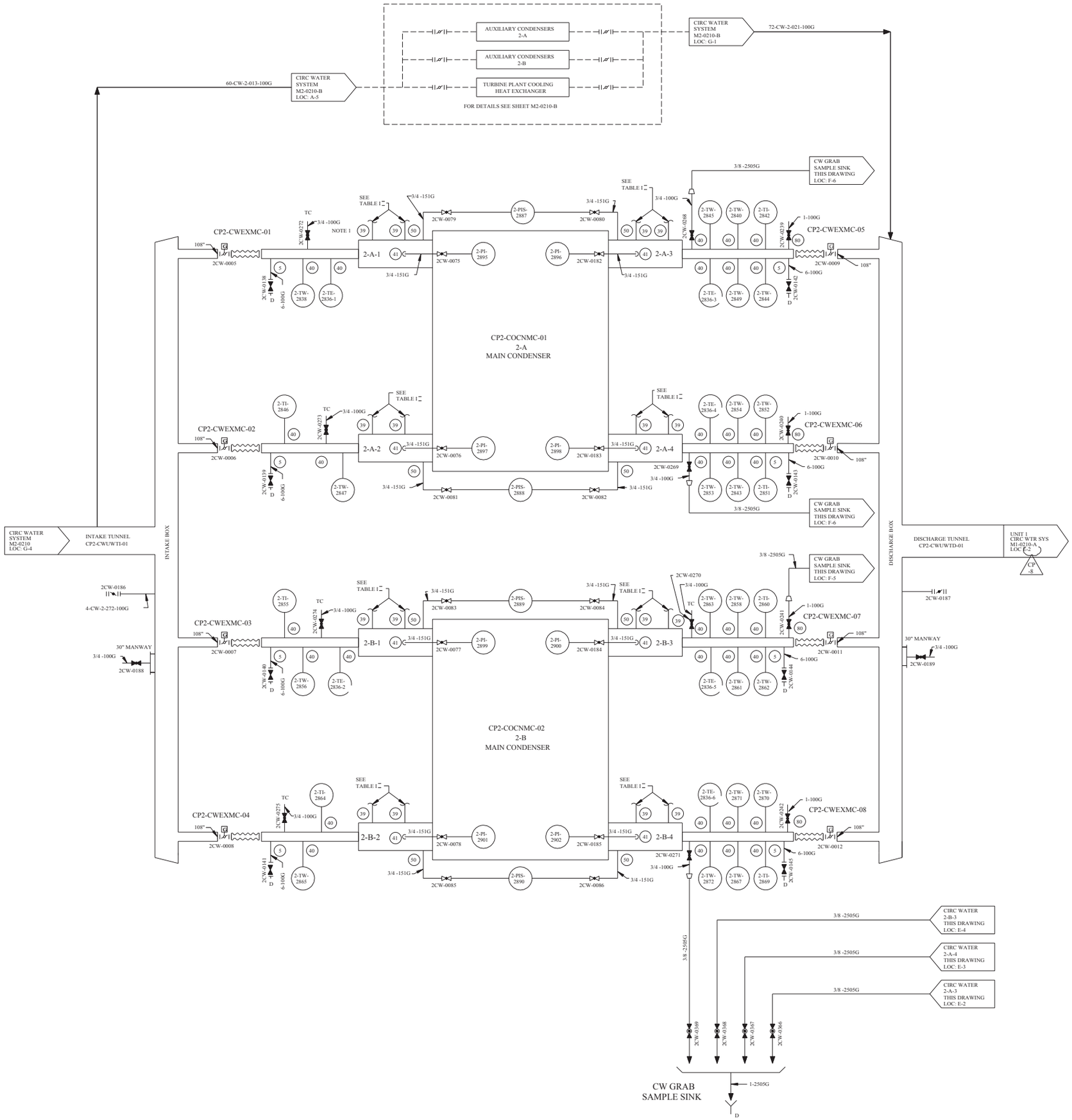

REV	DWN	CHKD	APVD	REMARKS
CP-8	DLK 08-17 2010			THIS DRAWING REVISED TO EDITORIALLY CORRECT DRAWING REFERENCE PER CR-2010-007600.

NOTES:

1. MANUFACTURERS CONNECTION POINTS ON THE MAIN CONDENSERS ARE REPRESENTED BY ENCIRCLED NUMBERS CORRESPONDING TO THE VENDORS DRAWINGS.
2. FOR MECHANICAL SYMBOLS AND NOTES SEE DRAWING M1-0200.
3. UNLESS OTHERWISE NOTED DRAINS COLLECTED BY LOCAL DRAIN SYSTEM.

TABLE 1

		MAIN CONDENSER (SEE DETAIL A)							
		CP2-COCNMC-01				CP2-COCNMC-02			
		INLET		OUTLET		INLET		OUTLET	
		2-A-1	2-A-2	2-A-3	2-A-4	2-B-1	2-B-2	2-B-3	2-B-4
LG		2-LG-2877	2-LG-2879	2-LG-2878	2-LG-2880	2-LG-2881	2-LG-2883	2-LG-2882	2-LG-2884
VALVES	A	2CW-0067	2CW-0069	2CW-0087	2CW-0089	2CW-0071	2CW-0073	2CW-0091	2CW-0093
	B	2CW-0068	2CW-0070	2CW-0088	2CW-0090	2CW-0072	2CW-0074	2CW-0092	2CW-0094
	C	2CW-0036	2CW-0038	2CW-0044	2CW-0055	2CW-0120	2CW-0122	2CW-0124	2CW-0126
	D	2CW-0037	2CW-0043	2CW-0054	2CW-0095	2CW-0121	2CW-0123	2CW-0125	2CW-0127

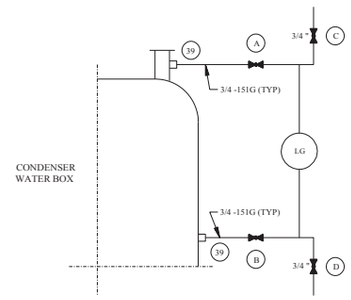

DETAIL "A"

FSAR FIGURE 10.4-5

THIS DRAWING CREATED ELECTRONICALLY

DRAWING 2323-M2-0210 REV CP-3
HAS BEEN SPLIT INTO THE FOLLOWING SHEETS:

- M2-0210
- M2-0210-A
- M2-0210-B
- M2-0210-C

NON-SAFETY

LUMINANT
CPNPP
GLEN ROSE, TEXAS

FLOW DIAGRAM
CIRCULATING WATER SYSTEM

DWG. NO. M2-0210 | SH. NO. A | REV. CP-8

FINAL PRINT

me0007ol.dgn M2-0210-A

REV	DWN	CHK	APVD	REMARKS
CP-16	DJL 09-07-2007	JRMC 09-07-2007		THIS DRAWING REVISED TO INCORPORATE DESIGN CHANGE FDA-2003-002540-05-00 PER SK-0002-03-002540-05-00.

NOTES:

1. HEAT EXCHANGER CHANNEL RELIEF VALVE SUPPLIED BY MANUFACTURER.
2. FOR MECHANICAL SYMBOLS AND NOTES SEE DRAWING M1-0200.
3. UNLESS OTHERWISE NOTED DRAINS COLLECTED BY LOCAL DRAIN SYSTEM.

TABLE III

AUX. CONDENSERS (DETAIL "A")			LG	A	B	C	D
CP2-COCNAC-01	INLET		2-LG-2873	2CV-0068	2CW-0099	2CW-0132	2CW-0133
	OUTLET		2-LG-2874	2CV-0071	2CW-0109	2CW-0134	2CW-0135
CP2-COCNAC-02	INLET		2-LG-2875	2CV-0074	2CW-0110	2CW-0136	2CW-0137
	OUTLET		2-LG-2876	2CV-0077	2CW-0111	2CW-0022	2CW-0026

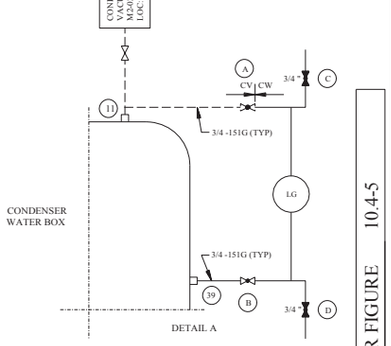

FSAR FIGURE 10.4-5

THIS DRAWING CREATED ELECTRONICALLY

DRAWING 2323-M2-0210 REV CP-3
HAS BEEN SPLIT INTO THE FOLLOWING SHEETS:

- M2-0210
- M2-0210-A
- M2-0210-B
- M2-0210-C

NON–SAFETY

LUMINANT
CPSES
GLEN ROSE, TEXAS

FLOW DIAGRAM
CIRCULATING WATER SYSTEM

DWG. NO. M2-0210 | SH. NO. B | REV. CP-16

FINAL PRINT

REFERENCES CHECKED 5/8/97 CP-8

me861600.dgn A M2-0210-B

REV	DWN	CHKD	APVD	REMARKS
CP-10	DCK 12-08 2016	MM 12-09 2016	MHF 12-12 2016	THIS DRAWING REVISED TO INCORPORATE AL-TR-2016-010212-1 TO EDITORIALLY CORRECT VALVE SYMBOL FOR XCW-0078.

NOTES:

1. FOR MECHANICAL NOTES AND SYMBOLS SEE DRAWING M1-0200.
2. UNLESS OTHERWISE NOTED ALL DRAINS COLLECTED BY LOCAL DRAIN SYSTEM.

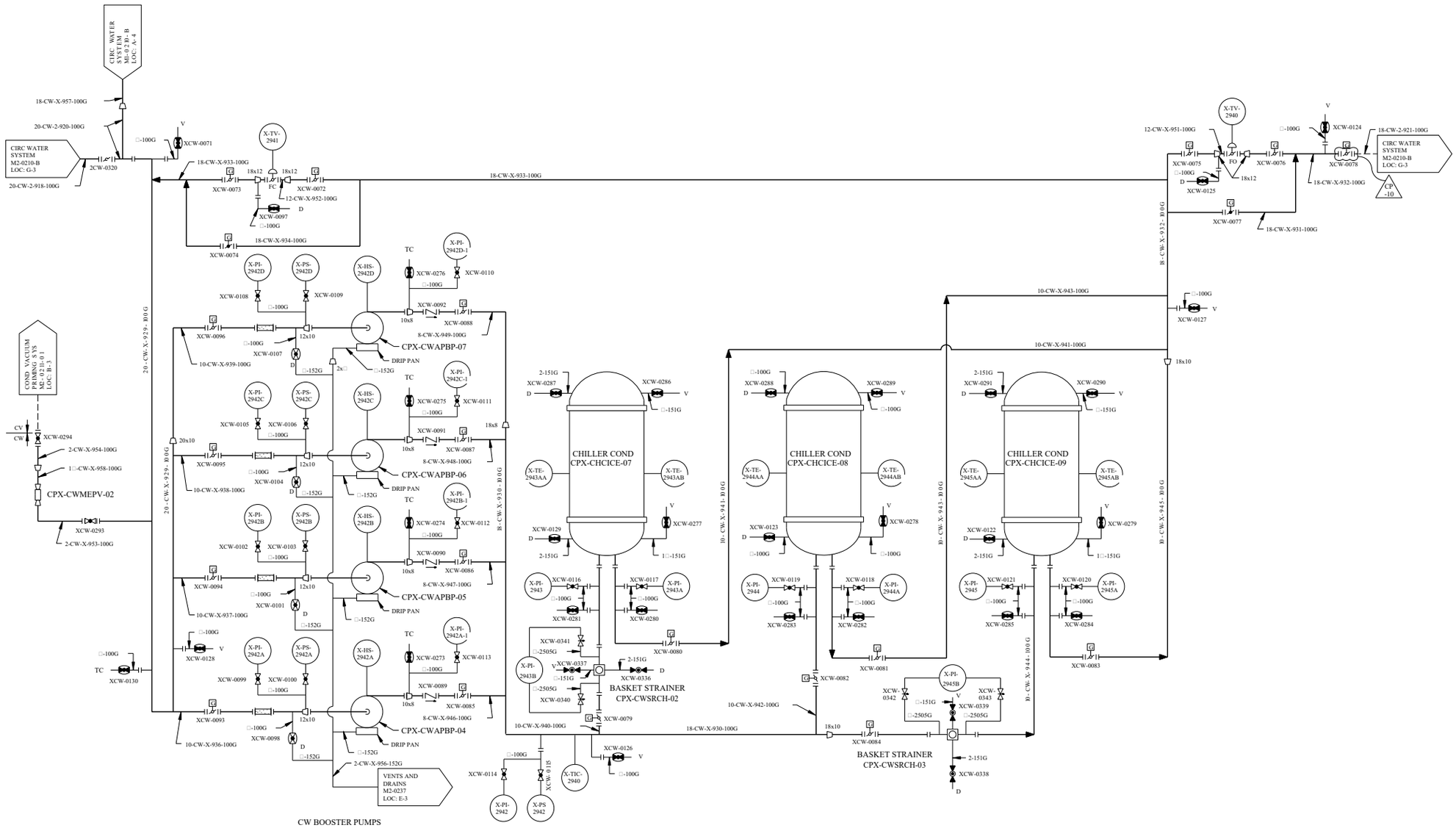

DRAWING 2323-M2-0210 REV CP-3
HAS BEEN SPLIT INTO THE FOLLOWING SHEETS:

M2-0210
M2-0210-A
M2-0210-B
M2-0210-C

NON–SAFETY

LUMINANT
CPNPP
GLEN ROSE, TEXAS

FLOW DIAGRAM
CIRCULATING WATER SYSTEM

DWG. NO.	SH. NO.	REV.
M2-0210	C	CP-10

FSAR FIGURE 10.4-5

THIS DRAWING CREATED ELECTRONICALLY

REV	DWN	CHK	DAPVD	REMARKS
CP-13	DLK 03-24-2010	MM 06-24-2010		THIS DRAWING REVISED TO INCORPORATE DESIGN CHANGE FDA 2007-003115-01-00 PER SK-0054-07-003115-01-00.

NOTES:

1. FOR MECHANICAL SYMBOLS AND NOTES SEE DRAWING M1-0200.
2. UNLESS OTHERWISE NOTED ALL DRAINS COLLECTED BY LOCAL DRAIN SYSTEM.
3. SIX INCHES OF 1/2 " DIA KYNAR AT PUMP SUCTION AND DISCHARGE.

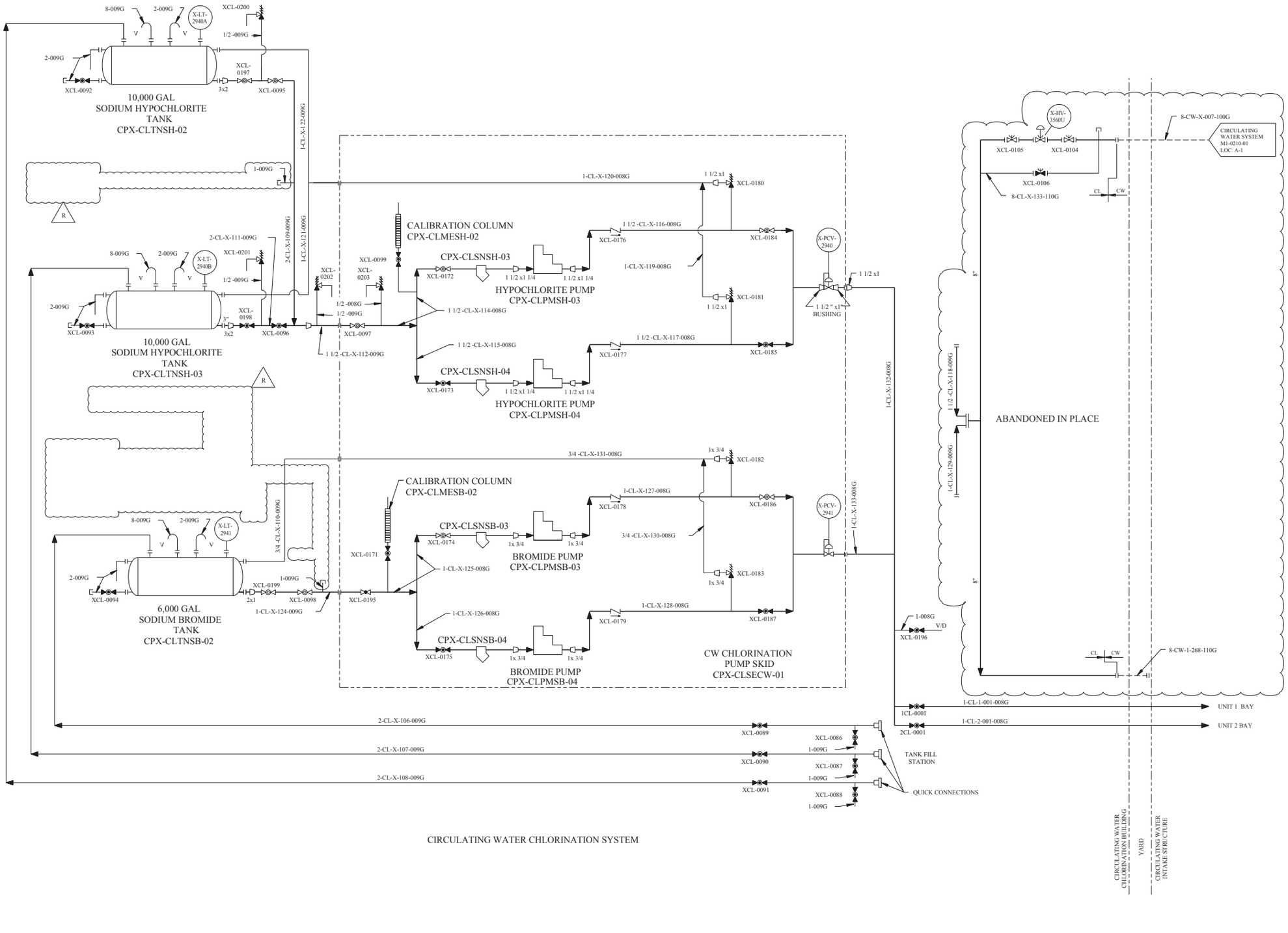

CIRCULATING WATER CHLORINATION SYSTEM

FSAR FIGURE 10.4-6

THIS DRAWING CREATED ELECTRONICALLY

NON–SAFETY

LUMINANT
CPNPP
GLEN ROSE, TEXAS

FLOW DIAGRAM
CHLORINATION SYSTEM

DWG. NO.	SH. NO.	REV.
M1-0240	01	CP-13

FINAL PRINT

REF CKD CP-6/9/18/97

mel03000.dgn A M1-0240-01

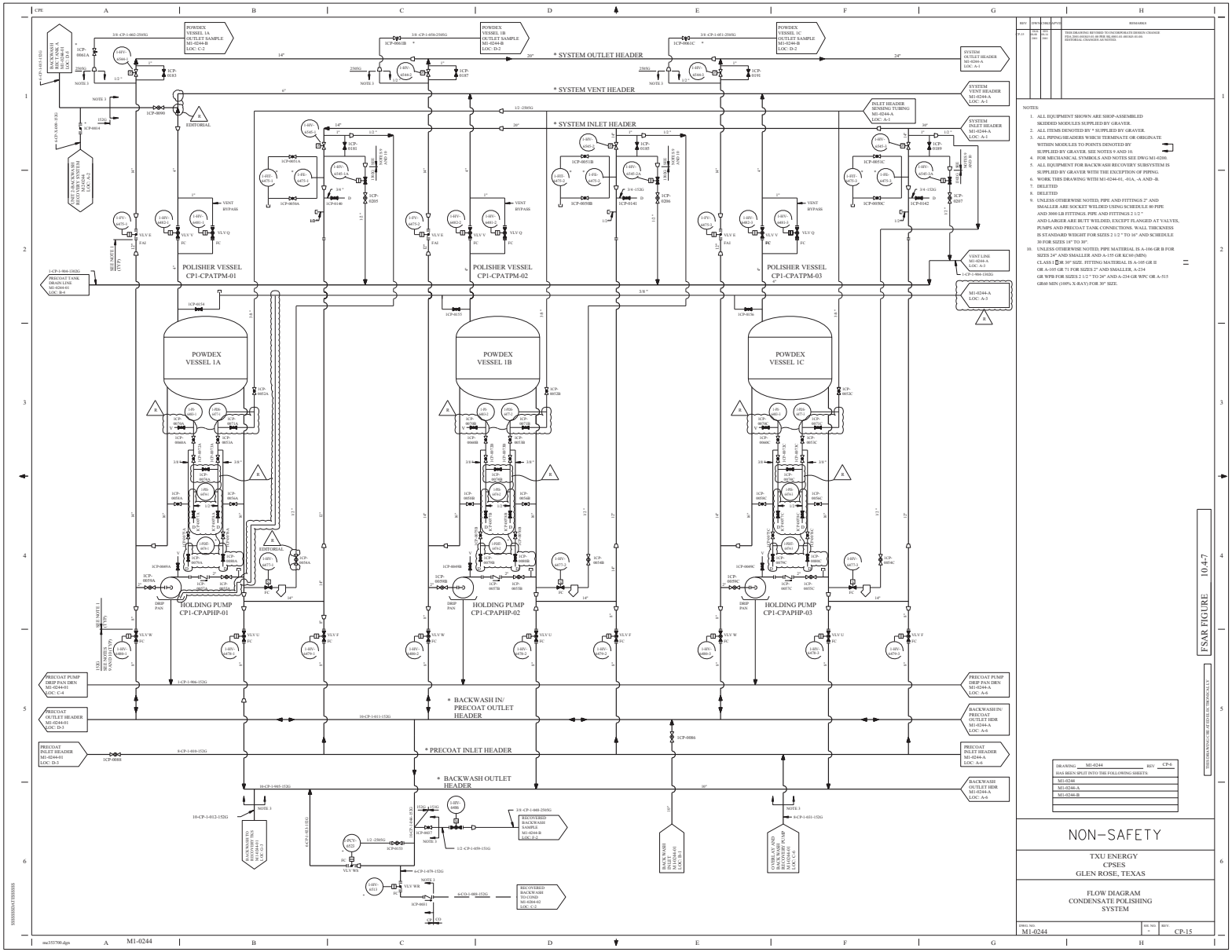
POWDEX VESSEL 1A OUTLET SAMPLE M1-0244-IB LOC: C-2
POWDEX VESSEL 1B OUTLET SAMPLE M1-0244-IB LOC: D-2
POWDEX VESSEL 1C OUTLET SAMPLE M1-0244-IB LOC: D-2
* SYSTEM OUTLET HEADER
* SYSTEM VENT HEADER
* SYSTEM INLET HEADER
SYSTEM OUTLET HEADER M1-0244-A LOC: A-1
SYSTEM VENT HEADER M1-0244-A LOC: A-1
SYSTEM INLET HEADER M1-0244-A LOC: A-1
INLET HEADER SENSING TUBING M1-0244-A LOC: A-1
POLISHER VESSEL CP1-CPATPM-01
POLISHER VESSEL CP1-CPATPM-02
POLISHER VESSEL CP1-CPATPM-03
POWDEX VESSEL 1A
POWDEX VESSEL 1B
POWDEX VESSEL 1C
HOLDING PUMP CP1-CPAPHP-01
HOLDING PUMP CP1-CPAPHP-02
HOLDING PUMP CP1-CPAPHP-03
* BACKWASH IN/ PRECOAT OUTLET HEADER
* PRECOAT INLET HEADER
* BACKWASH OUTLET HEADER
PRECOAT TANK DRAIN LINE M1-0244-01 LOC: B-4
PRECOAT PUMP DRIP PAN DRN M1-0244-01 LOC: C-4
PRECOAT OUTLET HEADER M1-0244-01 LOC: D-3
PRECOAT INLET HEADER M1-0244-01 LOC: D-3
BACKWASH IN/ PRECOAT OUTLET HDR M1-0244-A LOC: A-6
PRECOAT PUMP DRIP PAN DRN M1-0244-A LOC: A-6
PRECOAT INLET HEADER M1-0244-A LOC: A-6
BACKWASH OUTLET HDR M1-0244-A LOC: A-6
BACKWASH IN/ PRECOAT OUTLET HDR M1-0244-A LOC: A-3
VENT LINE M1-0244-A LOC: A-3
BACKWASH IN/ RECOVERY TK M1-0244-01 LOC: C-3
BACKWASH INLET M1-0244-01 LOC: B-1
OVERFLOW AND BACKWASH PUMP M1-0244-01 LOC: C-1
RECOVERED BACKWASH SAMPLE M1-0244-B LOC: C-3
RECOVERED BACKWASH TO COND M1-0204-02 LOC: C-2
SEE BACKWASH RECOVERY SYSTEM M1-0244-01 LOC: A-2
EDITORIAL
VENT BYPASS
DRIP PAN
NOTE 1
NOTE 2
NOTE 3
SEE NOTE 1 (TYP)
SEE NOTE 2 (TYP)
1-CP-1-904-150SG
1-CP-1-906-152SG
8-CP-1-910-152G
10-CP-1-911-152G
10-CP-1-912-152G
8-CP-1-913-152G
10-CP-1-965-152G
3/8-CP-1-660-2505G
1/2-CP-1-659-151G
6-CP-1-979-152G
6-CO-1-988-152G
1/2-2505G
3/4-152G
1-CP-1-986-152G
1-CP-1-904-150SG
3/8-CP-1-656-2505G
3/8-CP-1-651-2505G
2505G
14"
20"
24"
6"
30"
10"
8"
4"
3"
2"
1"
1/2"
3/4"
3/8"
FC
FAI
VLV E
VLV V
VLV Q
VLV W
VLV U
VLV F
VLV WR
VLV CO
ICP-0886
ICP-0888
ICP-0884
ICP-0885
ICP-0887
ICP-0889
ICP-0890
ICP-0891
ICP-0892
ICP-0893
ICP-0894
ICP-0895
ICP-0896
ICP-0897
ICP-0898
ICP-0899
ICP-0900
ICP-0901
ICP-0902
ICP-0903
ICP-0904
ICP-0905
ICP-0906
ICP-0907
ICP-0908
ICP-0909
ICP-0910
ICP-0911
ICP-0912
ICP-0913
ICP-0914
ICP-0915
ICP-0916
ICP-0917
ICP-0918
ICP-0919
ICP-0920
ICP-0921
ICP-0922
ICP-0923
ICP-0924
ICP-0925
ICP-0926
ICP-0927
ICP-0928

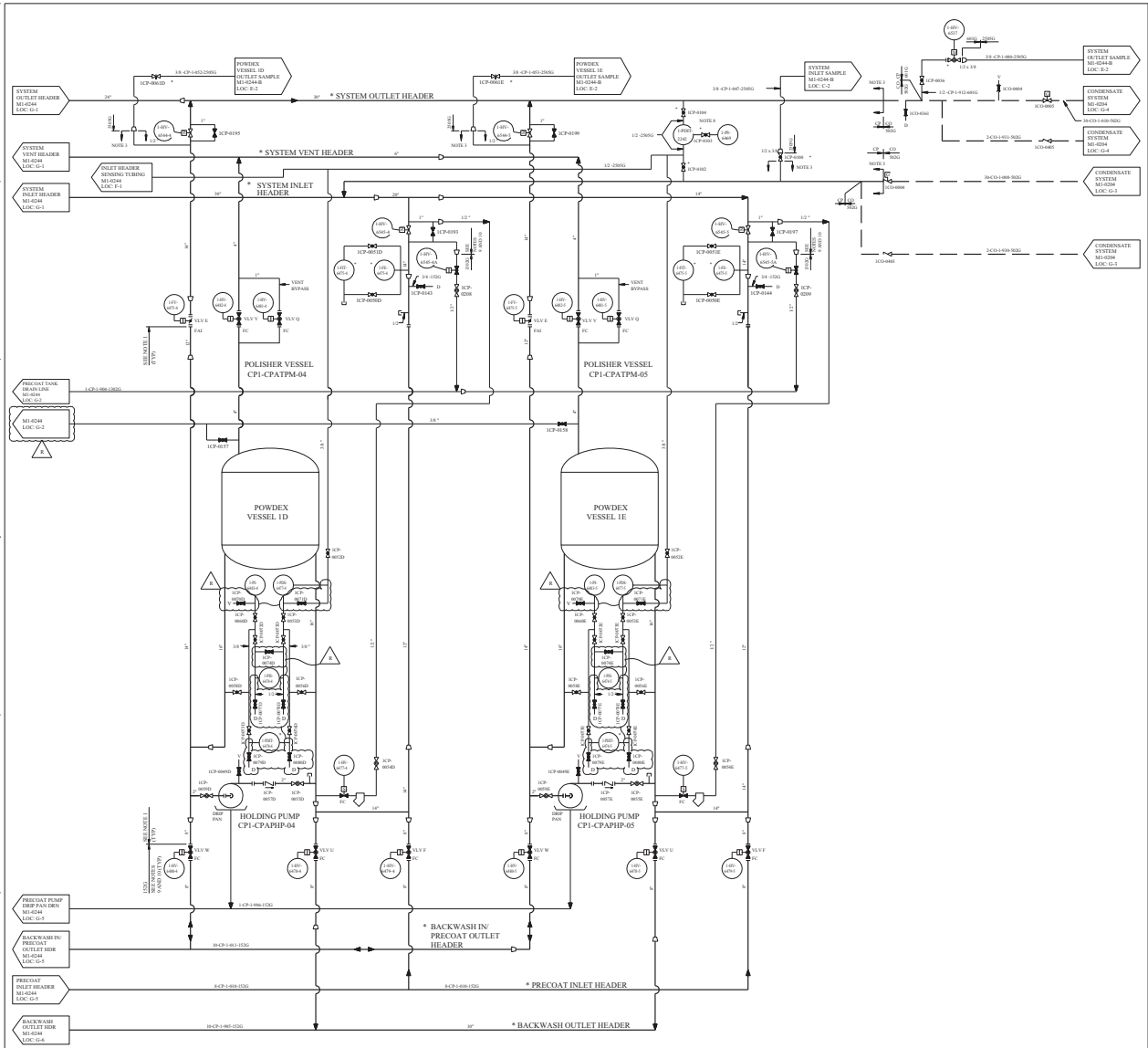

NOTES:

1. ALL EQUIPMENT SHOWN ARE SHOP-ASSEMBLED SKIDDED MODULES SUPPLIED BY GRAVER.
2. ALL ITEMS DENOTED BY * SUPPLIED BY GRAVER.
3. ALL PIPING/HEADERS WHICH TERMINATE OR ORIGINATE WITHIN MODULES TO POINTS DENOTED BY SUPPLIED BY GRAVER. SEE NOTES 9 AND 10.
4. FOR MECHANICAL SYMBOLS AND NOTES SEE DWG M1-0286
5. ALL EQUIPMENT FOR BACKWASH RECOVERY SUBSYSTEM IS SUPPLIED BY GRAVER WITH THE EXCEPTION OF PIPING.
6. WORK THIS DRAWING WITH M1-0244, M1-0244-B, M1-0244-01, AND M1-0244-01A.
7. DELETED
8. HIGH DIFFERENTIAL PRESSURE SIGNAL FROM 1-PDIT-2242 OPENS CONDENSATE POLISHING SYSTEM BYPASS VALVE 1-PV-2242 SHOWN ON M1-0204 LOC: F-3, SEE ALSO M1-2204-04 FOR CONTROL SCHEMATIC.
9. UNLESS OTHERWISE NOTED, PIPE AND FITTINGS 2" AND SMALLER ARE SOCKET WELDED USING SCHEDULE 80 PIPE AND 3000 LB FITTINGS. PIPE AND FITTINGS 2 1/2 " AND LARGER ARE BUTT WELDED, EXCEPT FLANGED AT VALVES, PUMPS AND PRECOAT TANK CONNECTIONS. WALL THICKNESS IS STANDARD WEIGHT FOR SIZES 2 1/2 " TO 16" AND SCHEDULE 30 FOR SIZES 18" TO 30".
10. UNLESS OTHERWISE NOTED, PIPE MATERIAL IS A-106 GR B FOR SIZES 24" AND SMALLER AND A-155 GR KC60 (MIN) CLASS 1 FOR 30" SIZE. FITTING MATERIAL IS A-105 GR II OR A-105 GR 71 FOR SIZES 2" AND SMALLER, A-234 GR WPB FOR SIZES 2 1/2 " TO 24" AND A-234 GR WPC OR A-515 GR60 MIN (100% X-RAY) FOR 30" SIZE.

REV	DRWN	DSGN	APVD	REMARKS
CP-8	MM/DD/YY	MM/DD/YY	MM/DD/YY	THIS DRAWING REVISED TO INCORPORATE DESIGN CHANGE PDA 2010-2035163-01-00 PER SR-2035131-001R01-01-00.

USAR FIGURE 10.4-7

DRAWING 2323-M1-0244 REV CP-8
HAS BEEN SPLIT INTO THE FOLLOWING SHEETS:

M1-0244
M1-0244-A
M1-0244-B

THIS DRAWING CAD SYSTEM IS TECHNICALLY

NON-SAFETY

TXU ENERGY
CPSES
GLEN ROSE, TEXAS

FLOW DIAGRAM
CONDENSATE POLISHING SYSTEM

DRWG. NO.	SH. NO.	REV
M1-0244	A	CP-8

M1-0244-A

REF 1: CKT1-CP-6 - 10/20/97

ISSUED/DATE/ISSUED

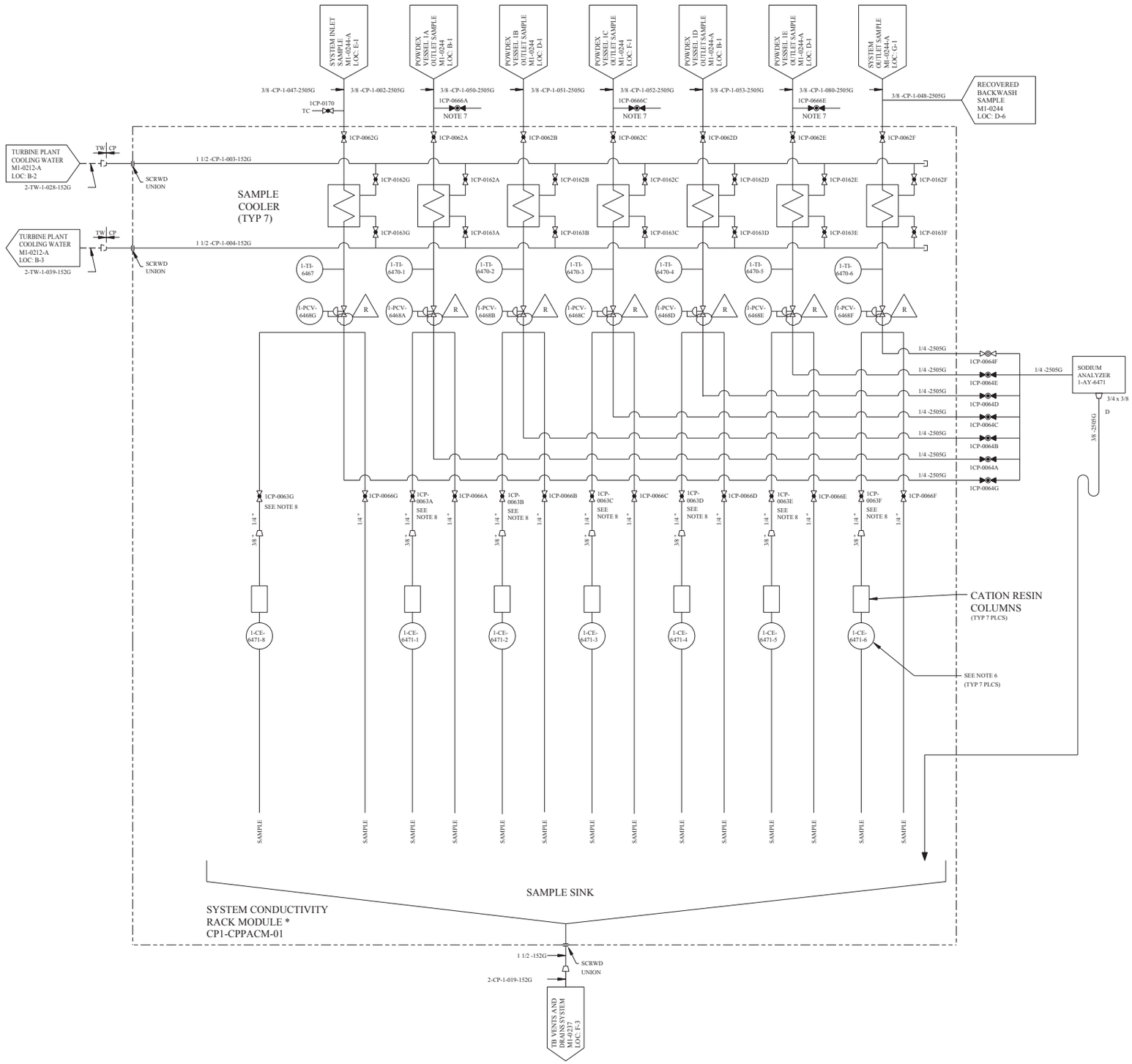

REV	DWN	CHKD	APVD	REMARKS
CP-11	DLK 06-22 2010	MM 06-22 2010		THIS DRAWING REVISED TO INCORPORATE DESIGN CHANGE FDA 2010-000103-01-00 PER SK-0001-10-000103-01-00.

NOTES:

1. ALL EQUIPMENT SHOWN WITHIN DASHED LINES WAS SUPPLIED AS SHOP-ASSEMBLED SKIDDED MODULES.
2. ALL EQUIPMENT DENOTED BY * WAS SUPPLIED BY GRAVER.
3. FOR MECHANICAL SYMBOLS AND NOTES SEE DWG M1-0200.
4. DELETED
5. WORK THIS DWG WITH M1-0244, M1-0244-A, -01 AND -01A.
6. CONDUCTIVITY RECORDER INPUTS:

1-CE-6471-1	VESSEL 1A EFFLUENT
1-CE-6471-2	VESSEL 1B EFFLUENT
1-CE-6471-3	VESSEL 1C EFFLUENT
1-CE-6471-4	VESSEL 1D EFFLUENT
1-CE-6471-5	VESSEL 1E EFFLUENT
1-CE-6471-6	SYSTEM INFLUENT
1-CE-6471-8	SYSTEM EFFLUENT/BACKWASH REC
1-AY-6471	LEAD BED SODIUM ANALYZER

7. VESSEL AUXILIARY SAMPLING POINTS.
8. CHEMISTRY THROTTLES VALVES ON IN SERVICE VESSELS.

FSAR FIGURE 10.4-7

THIS DRAWING CREATED ELECTRONICALLY

DRAWING 2323-M1-0244 REV CP-6
HAS BEEN SPLIT INTO THE FOLLOWING SHEETS:

M1-0244
M1-0244-A
M1-0244-B

NON-SAFETY

LUMINANT
CPNPP
GLEN ROSE, TEXAS

FLOW DIAGRAM
CONDENSATE POLISHING
SYSTEM

DWG. NO.	SH. NO.	REV.
M1-0244	B	CP-11

REV	DWN	CHKD	APVD	REMARKS
CP-25	DLK 04-05 2016	MIF 04-05 2016		THIS DRAWING REVISED TO INCORPORATE DESIGN CHANGE FDA-2016-000034-01-00 PER SK-0001-16-000034-01-00. EDITORIAL CHANGE AS NOTED.

NOTES:

1. ALL EQUIPMENT SHOWN WITHIN DASHED LINES AS SHOP-ASSEMBLED SKIDDED MODULES.
2. ALL ITEMS DENOTED BY * WERE SUPPLIED BY GRAVER.
3. ALL PIPING/HEADERS WHICH TERMINATE OR ORIGINATE WITHIN MODULES TO POINTS DENOTED BY SUPPLIED BY GRAVER. THE HEADERS AND EQUIPMENT MOUNTED THEREON ARE FIELD INSTALLED.
4. FOR MECHANICAL SYMBOLS AND NOTES SEE DWG M1-0200.
5. ALL EQUIPMENT FOR BACKWASH RECOVERY SUBSYSTEM IS SUPPLIED BY GRAVER WITH THE EXCEPTION OF PIPING.
6. THIS LINE IS FLANGED FOR POSSIBLE FUTURE USE IN DISPOSAL OF CHEMICAL CLEANING WASTES FROM THIS SYSTEM.
7. WORK THIS DWG WITH M1-0244, -A, -B AND -01A.
8. DELETED
9. UNLESS OTHERWISE NOTED, PIPE AND FITTINGS 2" AND SMALLER ARE SOCKET WELDED USING SCHEDULE 80 PIPE AND 3000 LB FITTINGS. PIPE AND FITTINGS 2□" AND LARGER ARE BUTT WELDED, EXCEPT FLANGED AT VALVES, PUMPS AND PRECOAT TANK CONNECTIONS. WALL THICKNESS IS STANDARD WEIGHT FOR SIZES 2□" TO 16" AND SCHEDULE 30 FOR SIZES 18" TO 30".
10. UNLESS OTHERWISE NOTED, PIPE MATERIAL IS A-106 GR B FOR SIZES 24" AND SMALLER AND A-155 GR KC60 (MIN) CLASS I ÉOR 30" SIZE. FITTING MATERIAL IS A-105 GR II OR A-105 GR71 FOR SIZES 2" AND SMALLER, A-234 GR WPB FOR SIZES 2□" TO 24" AND A-234 GR WPC OR A-515 GR 60 MIN (100% X-RAY) FOR 30" SIZE.
11. FC ON LOSS OF POWER AND FAI ON LOSS OF AIR.
12. HOOKUP CONNECTIONS FOR METERED PRECOAT SKID.
13. DELETED

DRAWING ECE-M1-0244-01 REV CP-5
HAS BEEN SPLIT INTO THE FOLLOWING SHEETS:
M1-0244-01
M1-0244-01A

NON-SAFETY

LUMINANT
CPNPP
GLEN ROSE, TEXAS

FLOW DIAGRAM
CONDENSATE POLISHING SYSTEM

DWG. NO. M1-0244 | SH. NO. 01 | REV. CP-25

FSAR FIGURE 10.4-7

THIS DRAWING CREATED ELECTRONICALLY

REF CKD 04-03-98 CP-21

me373700.dgn M1-0244-01 FINAL PRINT

REV	DWN	CHKD	APVD	REMARKS
CP-14	JHMC 05-07 2009	SM 05-26 2009		THIS DRAWING REVISED TO INCORPORATE DESIGN CHANGE FDA-2009-001033-01-00 PER SK-0001-09-001033-01-00.

NOTES:

1. ALL EQUIPMENT DENOTED BY * WAS SUPPLIED BY GRAVER.
2. FOR MECHANICAL SYMBOLS AND NOTES SEE DWG M1-0200.
3. ALL EQUIPMENT FOR BACKWASH RECOVERY SUBSYSTEM IS SUPPLIED BY GRAVER WITH THE EXCEPTION OF PIPING.
4. WORK THIS DWG WITH M1-0244, M1-0244-A, M1-0244-B AND M1-0244-01A.
5. DELETED

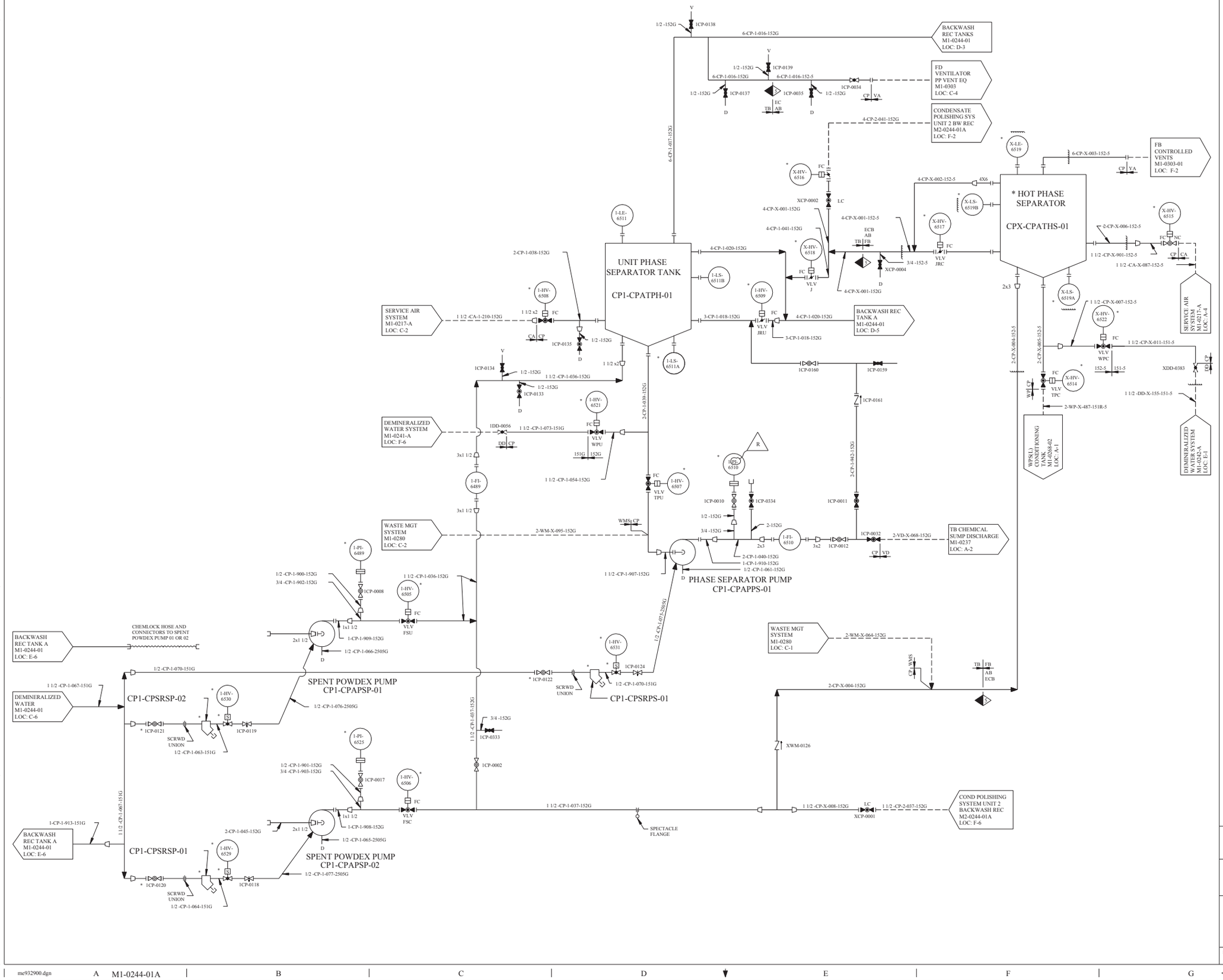

FSAR FIGURE 10.4-7

THIS DRAWING CREATED ELECTRONICALLY

DRAWING ECE-M1-0244-01 REV CP-5
HAS BEEN SPLIT INTO THE FOLLOWING SHEETS:
M1-0244-01
M1-0244-01A

CLASS II

LUMINANT
CPNPP
GLEN ROSE, TEXAS

FLOW DIAGRAM
CONDENSATE POLISHING SYSTEM

DWG. NO. M1-0244 | SH. NO. 01A | REV. CP-14

REF CHKD 10/23/2000

$$$$$$DATE$$$$$$

me932900.dgn M1-0244-01A

< FINAL PRINT >

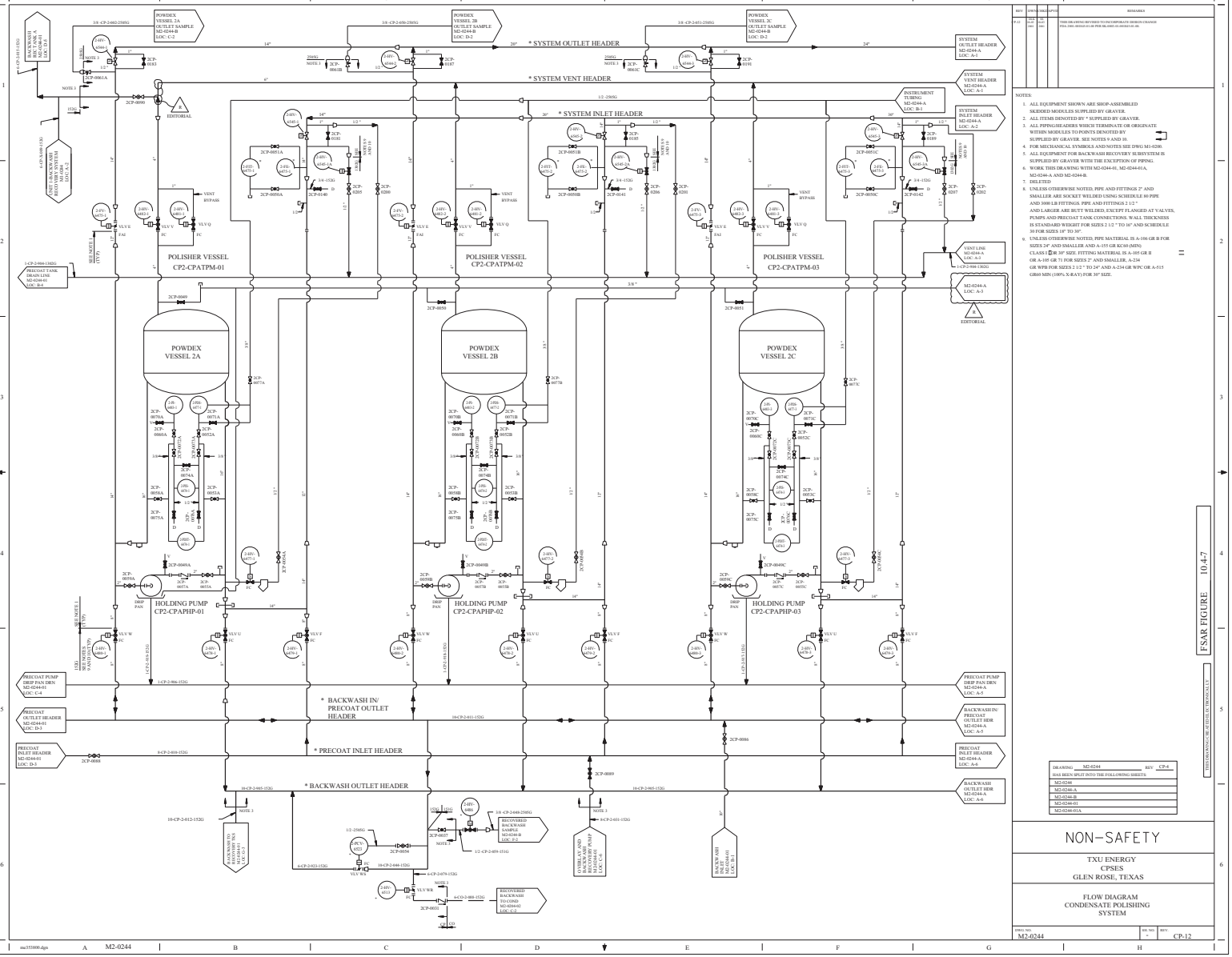
POWDEX VESSEL 2A OUTLET SAMPLE M2-0244-B LOC: C-2
POWDEX VESSEL 2B OUTLET SAMPLE M2-0244-B LOC: D-2
POWDEX VESSEL 2C OUTLET SAMPLE M2-0244-B LOC: D-2
* SYSTEM OUTLET HEADER
* SYSTEM VENT HEADER
* SYSTEM INLET HEADER
SYSTEM OUTLET HEADER M2-0244-A LOC: A-1
SYSTEM VENT HEADER M2-0244-A LOC: A-1
SYSTEM INLET HEADER M2-0244-A LOC: A-1
INSTRUMENT TUBING M2-0244-A LOC: B-1
POLISHER VESSEL CP2-CPATPM-01
POLISHER VESSEL CP2-CPATPM-02
POLISHER VESSEL CP2-CPATPM-03
POWDEX VESSEL 2A
POWDEX VESSEL 2B
POWDEX VESSEL 2C
HOLDING PUMP CP2-CPAPHP-01
HOLDING PUMP CP2-CPAPHP-02
HOLDING PUMP CP2-CPAPHP-03
* BACKWASH IN/ PRECOAT OUTLET HEADER
* PRECOAT INLET HEADER
* BACKWASH OUTLET HEADER
PRECOAT TANK DRAIN LINE M2-0244-01 LOC: B-4
PRECOAT PUMP DRIP PAN DRN M2-0244-01 LOC: C-4
PRECOAT OUTLET HEADER M2-0244-01 LOC: D-3
PRECOAT INLET HEADER M2-0244-01 LOC: D-3
VENT LINE M2-0244-A LOC: A-3
M2-0244-A, LOC: A-3
EDITORIAL
PRECOAT PUMP DRIP PAN DRN M2-0244-A LOC: A-5
BACKWASH IN/ PRECOAT OUTLET HDR M2-0244-A LOC: A-5
PRECOAT INLET HDR M2-0244-A LOC: A-6
BACKWASH OUTLET HDR M2-0244-A LOC: A-6
RECOVERED BACKWASH SAMPLE M2-0244-B LOC: E-2
RECOVERED BACKWASH TO COND M2-0244-02 LOC: C-3
BACKWASH TO RECOVERY TKS M2-0244-01 LOC: C-3
DURABLAST AND BACKWASH PUMP M2-0244-01 LOC: C-6
BACKWASH AND PRECOAT M2-0244-01 LOC: B-6
NOTES:
1. ALL EQUIPMENT SHOWN ARE SHOP-ASSEMBLED SKIDDED MODULES SUPPLIED BY GRAVER.
2. ALL ITEMS DENOTED BY * SUPPLIED BY GRAVER.
3. ALL PIPING/HEADERS WHICH TERMINATE OR ORIGINATE WITHIN MODULES TO POINTS DENOTED BY SUPPLIED BY GRAVER. SEE NOTES 9 AND 10.
4. FOR MECHANICAL SYMBOLS AND NOTES SEE DWG M1-0200.
5. ALL EQUIPMENT FOR BACKWASH RECOVERY SUBSYSTEM IS SUPPLIED BY GRAVER WITH THE EXCEPTION OF PIPING.
6. WORK THIS DRAWING WITH M2-0244-01, M2-0244-01A, M2-0244-A AND M2-0244-B.
7. DELETED
8. UNLESS OTHERWISE NOTED, PIPE AND FITTINGS 2" AND SMALLER ARE SOCKET WELDED USING SCHEDULE 80 PIPE AND 3000 LB FITTINGS. PIPE AND FITTINGS 2 1/2 " AND LARGER ARE BUTT WELDED, EXCEPT FLANGED AT VALVES, PUMPS AND PRECOAT TANK CONNECTIONS. WALL THICKNESS IS STANDARD WEIGHT FOR SIZES 2 1/2 " TO 16" AND SCHEDULE 30 FOR SIZES 18" TO 30".
9. UNLESS OTHERWISE NOTED, PIPE MATERIAL IS A-106 GR B FOR SIZES 24" AND SMALLER AND A-155 GR KC60 (MIN) CLASS I FOR 30" SIZE. FITTING MATERIAL IS A-105 GR II OR A-105 GR 71 FOR SIZES 2" AND SMALLER, A-234 GR WPB FOR SIZES 2 1/2 " TO 24" AND A-234 GR WPC OR A-515 GR60 MIN (100% X-RAY) FOR 30" SIZE.
FSAR FIGURE 10.4-7
THIS DRAWING WAS CREATED BY DESIGNALL 5.0
DRAWING M2-0244 REV CP-4 HAS BEEN SPLIT INTO THE FOLLOWING SHEETS:
M2-0244
M2-0244-A
M2-0244-B
M2-0244-01
M2-0244-01A
NON-SAFETY
TXU ENERGY
CPSES
GLEN ROSE, TEXAS
FLOW DIAGRAM
CONDENSATE POLISHING SYSTEM
DWG NO. M2-0244
REV. CP-12
REVISIONS
REV 9-12 THIS DRAWING REVISED TO INCORPORATE DESIGN CHANGE FDA-2002-0004-01-01 PER NL-0005-01-00-0001-01-00.

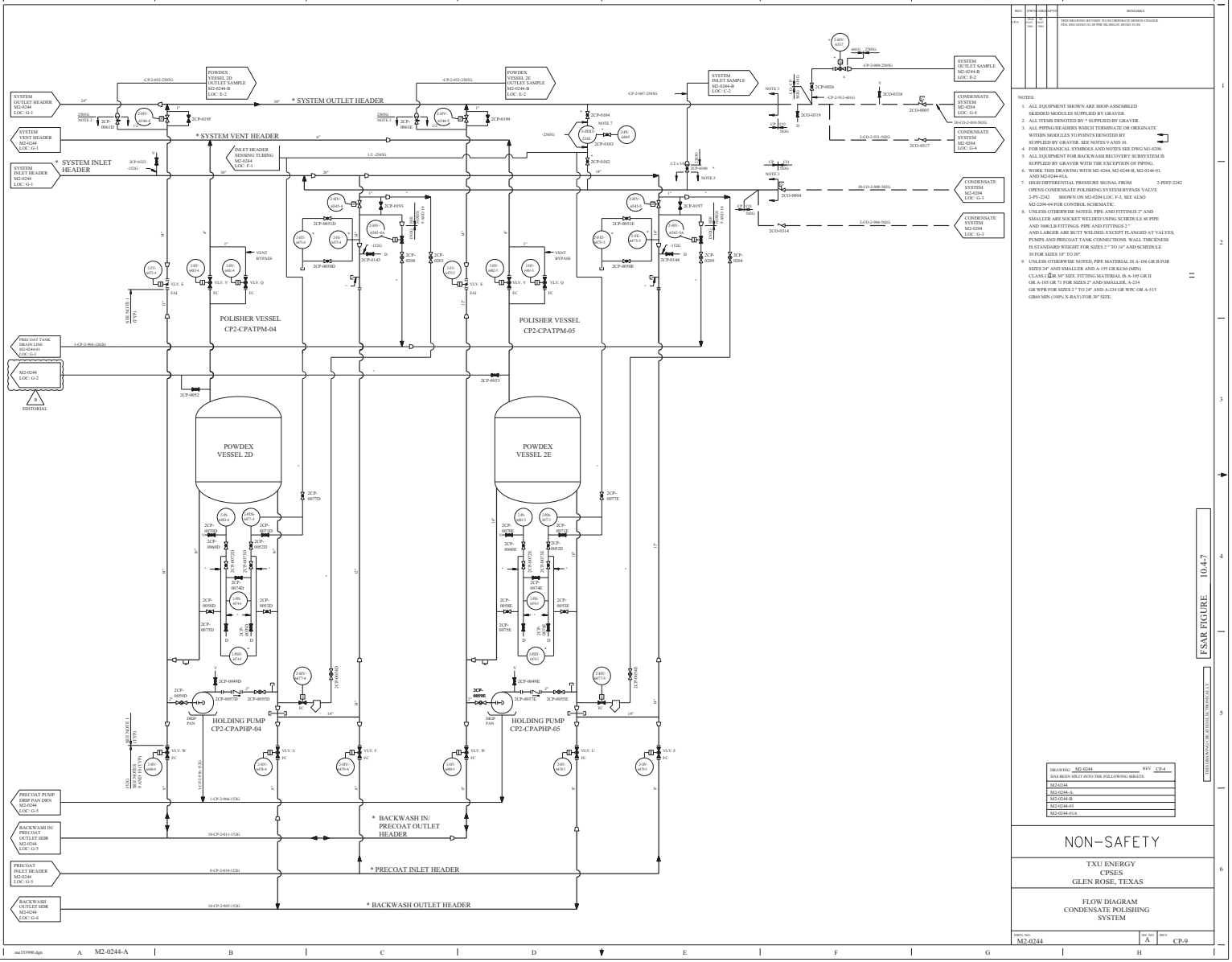

NOTES:

1. ALL EQUIPMENT SHOWN ARE SKID-ASSEMBLED SKIDDED MODULES SUPPLIED BY GRAVER.
2. ALL ITEMS DENOTED BY * SUPPLIED BY GRAVER.
3. ALL PIPING/HEADERS WHICH TERMINATE OR ORIGINATE WITHIN MODULES TO POINTS DENOTED BY SUPPLIED BY GRAVER. SEE NOTES 9 AND 10.
4. FOR MECHANICAL SYMBOLS AND NOTES SEE DWG M1-0200.
5. ALL EQUIPMENT FOR BACKWASH RECOVERY SUBSYSTEM IS SUPPLIED BY GRAVER WITH THE EXCEPTION OF PIPING.
6. WORK THIS DRAWING WITH M2-0244, M2-0244-B, M2-0244-01, AND M2-0244-01A.
7. HIGH DIFFERENTIAL PRESSURE SIGNAL FROM 2-PDIT-2242 OPENS CONDENSATE POLISHING SYSTEM BYPASS VALVE. 2-PV-2242 SHOWN ON M2-0204 LOC: F-3, SEE ALSO M2-2204-04 FOR CONTROL SCHEMATIC
8. UNLESS OTHERWISE NOTED, PIPE AND FITTINGS 2" AND SMALLER ARE SOCKET WELDED USING SCHEDULE 80 PIPE AND 3000 LB FITTINGS. PIPE AND FITTINGS 2 " AND LARGER ARE BUTT WELDED, EXCEPT FLANGED AT VALVES, PUMPS AND PRECOAT TANK CONNECTIONS. WALL THICKNESS IS STANDARD WEIGHT FOR SIZES 2 " TO 16" AND SCHEDULE 30 FOR SIZES 18" TO 30".
9. UNLESS OTHERWISE NOTED, PIPE MATERIAL IS A-106 GR B FOR SIZES 24" AND SMALLER AND A-155 GR KC60 (MIN) CLASS 1 FOR 30" SIZE. FITTING MATERIAL IS A-105 GR II OR A-105 GR 71 FOR SIZES 2" AND SMALLER, A-234 GR WPB FOR SIZES 2 " TO 24" AND A-234 GR WPC OR A-515 GR60 MIN (100% X-RAY) FOR 30" SIZE.

REV	DWN	CHKD	APVD	REMARKS
CP-9				THIS DRAWING REVISED TO INCORPORATE DESIGN CHANGE FDA_DSG-0003/01.01 PER NL-0814-01 AND 02-01.

FSAR FIGURE 10.4-7

THIS DRAWING WAS CREATED IN CROSSVALUE

DRAWING M2-0244 HAS BEEN SPLIT INTO THE FOLLOWING SHEETS:	REV CP-4
M2-0244	
M2-0244-A	
M2-0244-B	
M2-0244-01	
M2-0244-01A	

NON-SAFETY

TXU ENERGY
CPSES
GLEN ROSE, TEXAS

FLOW DIAGRAM
CONDENSATE POLISHING
SYSTEM

DWG NO.	REV.
M2-0244	CP-9

ma155900.dgn A M2-0244-A

REV	DWN	CHKD	APVD	REMARKS
CP-9	DLK 06-29-2004	MM 07-07-2004		THIS DRAWING REVISED TO INCORPORATE DESIGN CHANGE FDA 2000-003261-02-00 PER SK-0002-00-003261-02-00.

NOTES:

1. ALL EQUIPMENT SHOWN WITHIN DASHED LINES WAS SUPPLIED AS SHOP-ASSEMBLED SKIDDED MODULES.
2. ALL EQUIPMENT DENOTED BY * WAS SUPPLIED BY GRAVER.
3. FOR MECHANICAL SYMBOLS AND NOTES SEE DWG M1-0200.
4. WORK THIS DWG WITH M2-0244, M2-0244-A, -01 AND -01A.
5. CONDUCTIVITY RECORDER INPUTS:

2-CE-6471-1	VESSEL 2A EFFLUENT
2-CE-6471-2	VESSEL 2B EFFLUENT
2-CE-6471-3	VESSEL 2C EFFLUENT
2-CE-6471-4	VESSEL 2D EFFLUENT
2-CE-6471-5	VESSEL 2E EFFLUENT
2-CE-6471-6	SYSTEM INFLUENT
2-CE-6471-8	SYSTEM EFFLUENT/BACKWASH REC

6. CHEMISTRY THROTTLES VALVES ON IN SERVICE VESSELS. R

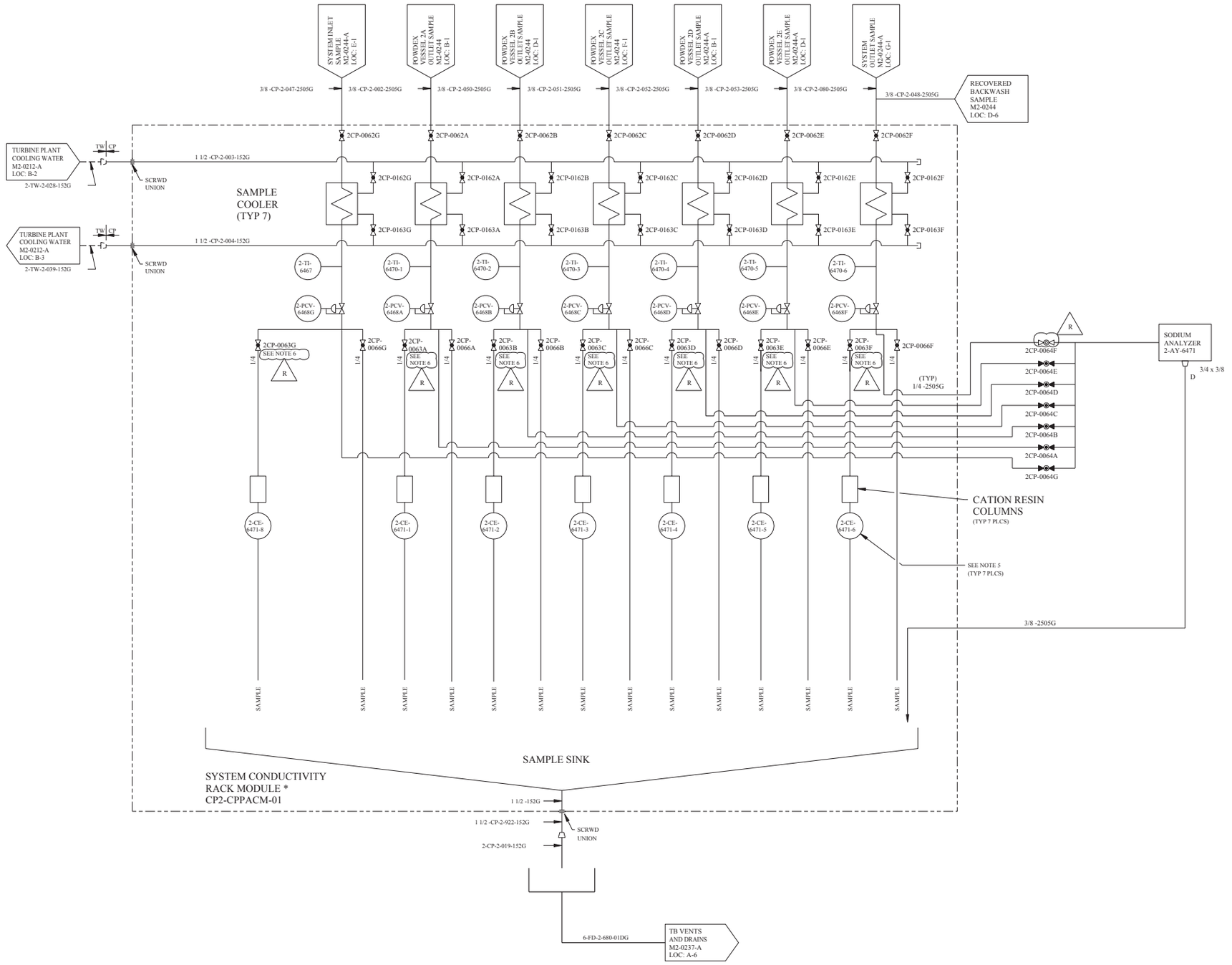

FSAR FIGURE 10.4-7

THIS DRAWING CREATED ELECTRONICALLY

DRAWING M2-0244 REV CP-4
HAS BEEN SPLIT INTO THE FOLLOWING SHEETS:

M2-0244
M2-0244-A
M2-0244-B
M2-0244-01
M2-0244-01A

NON-SAFETY

LUMINANT
CPSES
GLEN ROSE, TEXAS

FLOW DIAGRAM
CONDENSATE POLISHING
SYSTEM

DWG. NO.	SH. NO.	REV.
M2-0244	B	CP-9

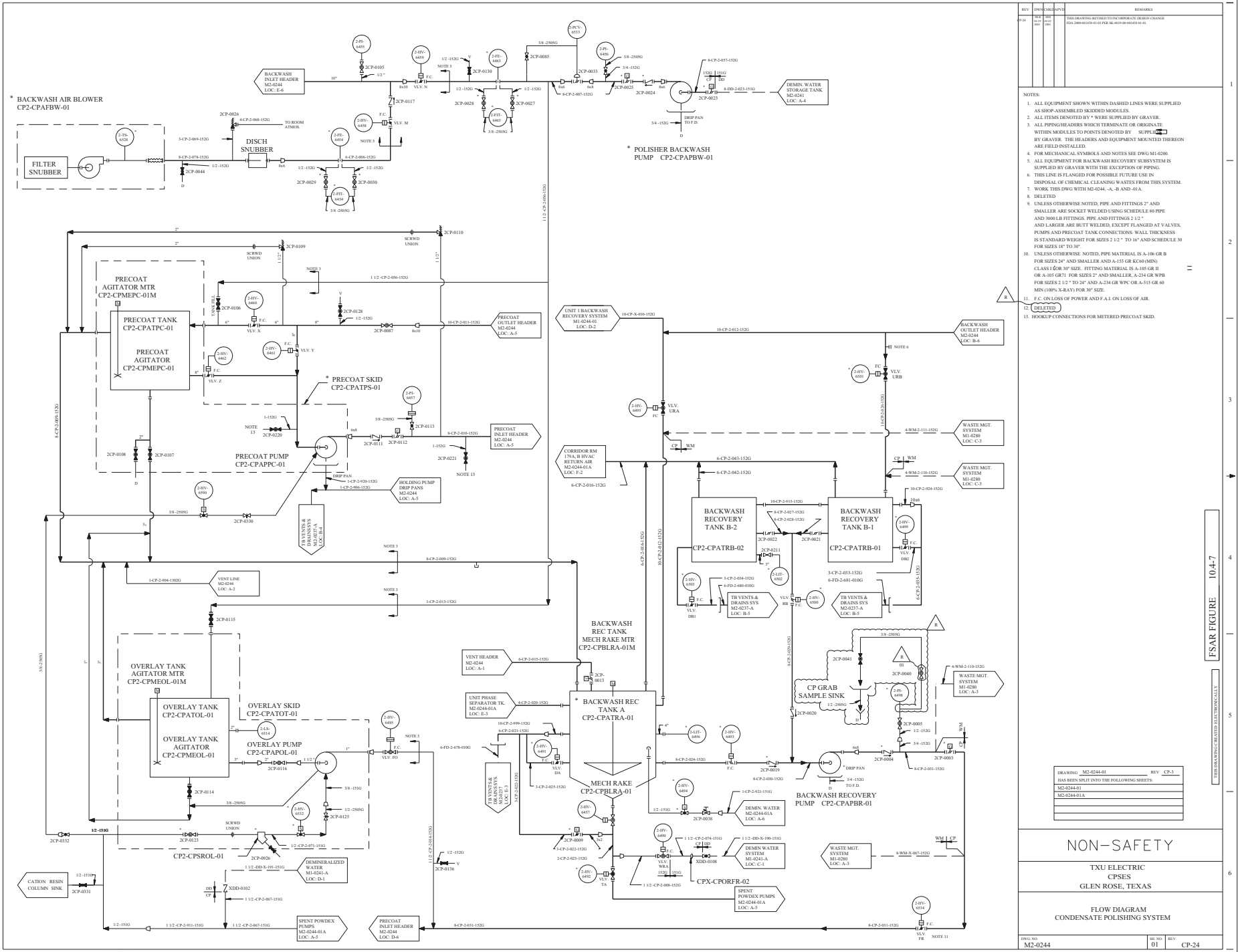
BACKWASH AIR BLOWER CP2-CPAFBW-01
FILTER SNUBBER
DISCH SNUBBER
TO ROOM ATMOS.
BACKWASH INLET HEADER M2-0244 LOC: E-6
DEMIN. WATER STORAGE TANK M2-0241 LOC: A-4
POLISHER BACKWASH PUMP CP2-CPAPBW-01
DRIP PAN TO F.D.
PRECOAT AGITATOR MTR CP2-CPMEPC-01M
PRECOAT TANK CP2-CPATPC-01
PRECOAT AGITATOR CP2-CPMEPC-01
PRECOAT SKID CP2-CPATPS-01
PRECOAT OUTLET HEADER M2-0244 LOC: A-5
PRECOAT INLET HEADER M2-0244 LOC: A-5
PRECOAT PUMP CP2-CPAPPC-01
HOLDING PUMP DRIP PANS M2-0244 LOC: A-5
TB VENTS & DRAINS SYS M2-0237-A LOC: B-4
VENT LINE M2-0244 LOC: A-2
OVERLAY TANK AGITATOR MTR CP2-CPMEOL-01M
OVERLAY TANK CP2-CPATOL-01
OVERLAY TANK AGITATOR CP2-CPMEOL-01
OVERLAY SKID CP2-CPATOT-01
OVERLAY PUMP CP2-CPAPOL-01
CP2-CPSROL-01
DEMINERALIZED WATER M1-0241-A LOC: D-1
CATION RESIN COLUMN SINK
SPENT POWDEX PUMPS M2-0244-01A LOC: A-5
PRECOAT INLET HEADER M2-0244 LOC: D-6
UNIT 1 BACKWASH RECOVERY SYSTEM M1-0244-01 LOC: D-2
CORRIDOR RM 179A, B HVAC RETURN AIR M2-0244-01A LOC: F-2
BACKWASH OUTLET HEADER M2-0244 LOC: B-6
WASTE MGT. SYSTEM M1-0280 LOC: C-3
BACKWASH RECOVERY TANK B-2 CP2-CPATRB-02
BACKWASH RECOVERY TANK B-1 CP2-CPATRB-01
TB VENTS & DRAINS SYS M2-0237-A LOC: B-5
BACKWASH REC TANK MECH RAKE MTR CP2-CPBLRA-01M
VENT HEADER M2-0244 LOC: A-1
UNIT PHASE SEPARATOR TK. M2-0244-01A LOC: E-3
BACKWASH REC TANK A CP2-CPATRA-01
MECH RAKE CP2-CPBLRA-01
CP GRAB SAMPLE SINK
BACKWASH RECOVERY PUMP CP2-CPAPBR-01
DEMIN. WATER M2-0244-01A LOC: A-6
DEMIN WATER SYSTEM M1-0241-A LOC: C-1
CPX-CPORFR-02
SPENT POWDEX PUMPS M2-0244-01A LOC: A-5
WASTE MGT. SYSTEM M1-0280 LOC: A-3
NOTES:
1. ALL EQUIPMENT SHOWN WITHIN DASHED LINES WERE SUPPLIED AS SHOP-ASSEMBLED SKIDDED MODULES.
2. ALL ITEMS DENOTED BY * WERE SUPPLIED BY GRAVER.
3. ALL PIPING/HEADERS WHICH TERMINATE OR ORIGINATE WITHIN MODULES TO POINTS DENOTED BY * SUPPLIED BY GRAVER. THE HEADERS AND EQUIPMENT MOUNTED THEREON ARE FIELD INSTALLED.
4. FOR MECHANICAL SYMBOLS AND NOTES SEE DWG M1-0200.
5. ALL EQUIPMENT FOR BACKWASH RECOVERY SUBSYSTEM IS SUPPLIED BY GRAVER WITH THE EXCEPTION OF PIPING.
6. THIS LINE IS FLANGED FOR POSSIBLE FUTURE USE IN DISPOSAL OF CHEMICAL CLEANING WASTES FROM THIS SYSTEM.
7. WORK THIS DWG WITH M2-0244, -A, -B AND -01-A.
8. DELETED
9. UNLESS OTHERWISE NOTED, PIPE AND FITTINGS 2" AND SMALLER ARE SOCKET WELDED USING SCHEDULE 80 PIPE AND 3000 LB FITTINGS. PIPE AND FITTINGS 2 1/2 " AND LARGER ARE BUTT WELDED, EXCEPT FLANGED AT VALVES, PUMPS AND PRECOAT TANK CONNECTIONS. WALL THICKNESS IS STANDARD WEIGHT FOR SIZES 2 1/2 " TO 16" AND SCHEDULE 30 FOR SIZES 18" TO 30".
10. UNLESS OTHERWISE NOTED, PIPE MATERIAL IS A-106 GR B FOR SIZES 24" AND SMALLER AND A-155 GR KC60 (MIN) CLASS I &OR 30" SIZE. FITTING MATERIAL IS A-105 GR II OR A-105 GR71 FOR SIZES 2" AND SMALLER, A-234 GR WPB FOR SIZES 2 1/2 " TO 24" AND A-234 GR WPC OR A-515 GR 60 MIN (100% X-RAY) FOR 30" SIZE.
11. F.C. ON LOSS OF POWER AND F.A.I. ON LOSS OF AIR.
12. DELETED
13. HOOKUP CONNECTIONS FOR METERED PRECOAT SKID.
REV DWN CHKD APVD REMARKS
CP-24 BCK 04-19-2001 SEH 04-22-2001 THIS DRAWING REVISED TO INCORPORATE DESIGN CHANGE FDA 2000-001858-01-01 PER SK-0659-00-001-E0-01-01.
DRAWING M2-0244-01 REV CP-3 HAS BEEN SPLIT INTO THE FOLLOWING SHEETS:
M2-0244-01
M2-0244-01A
NON-SAFETY
TXU ELECTRIC
CPSES
GLEN ROSE, TEXAS
FLOW DIAGRAM
CONDENSATE POLISHING SYSTEM
DWG. NO. M2-0244
SH. NO. 01
REV. CP-24
FSAR FIGURE 10.4-7
THIS DRAWING CREATED ELECTRONICALLY
REF CKD CP-19 10/17/97
$$$$$$$DATE$$$$$$$
mc373800.dgn
M2-0244-01

REV	DWN	CHK'D	APVD	REMARKS
CP-15	JHMC 11-23 2009	DJL 11-23 2009		THIS DRAWING REVISED TO INCORPORATE DESIGN CHANGE FDA-2009-006303-01-00 PER SK-0001-09-006303-01-00.

NOTES

1. DELETED
2. ALL EQUIPMENT DENOTED BY * WAS SUPPLIED BY GRAVER.
3. FOR MECHANICAL SYMBOLS AND NOTES SEE DWG M1-0200.
4. ALL EQUIPMENT FOR BACKWASH RECOVERY SUBSYSTEM IS SUPPLIED BY GRAVER WITH THE EXCEPTION OF PIPING.
5. WORK THIS DWG WITH M2-0244, M2-0244-A, M2-0244-B AND M2-0244-01.

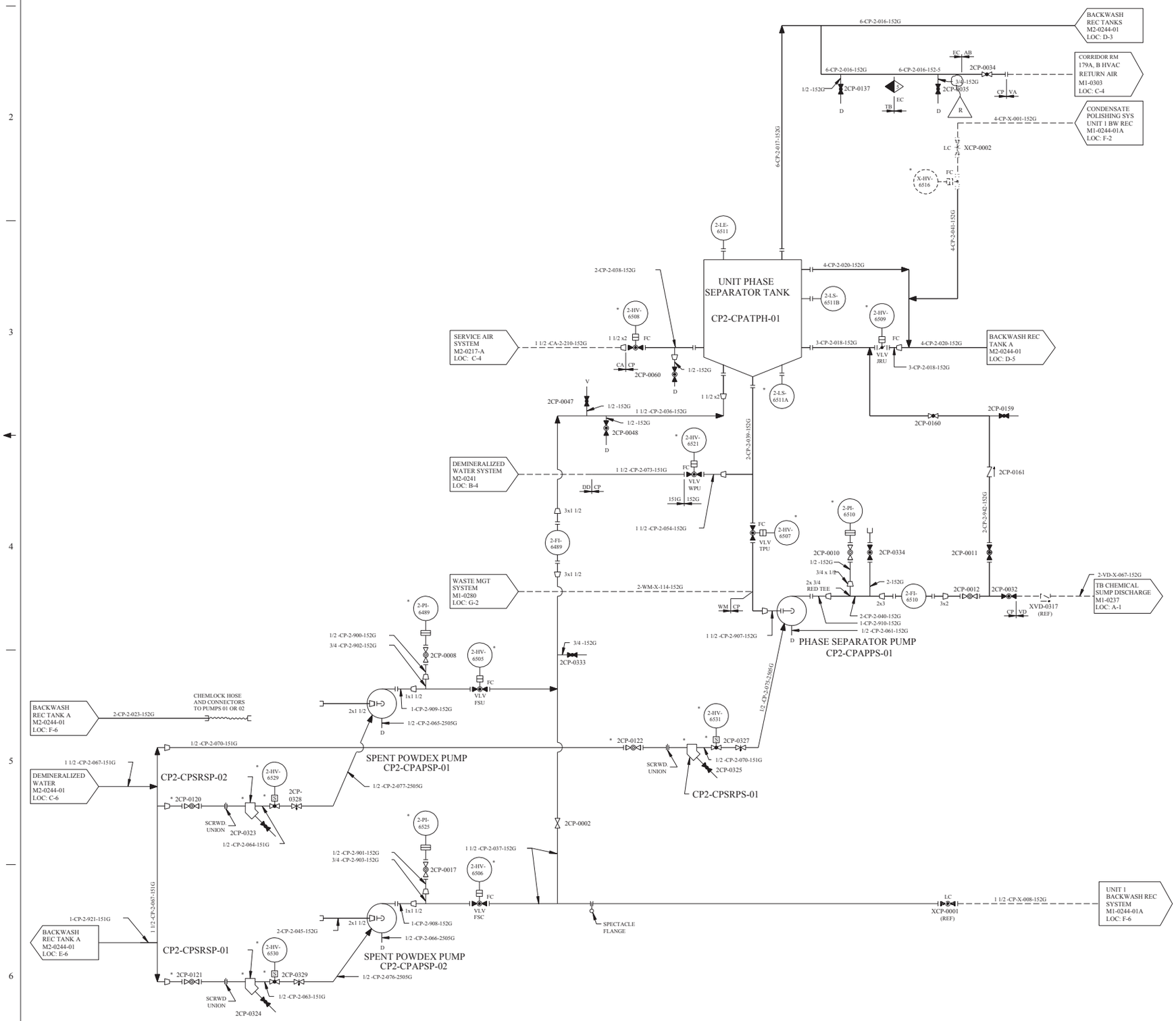

DRAWING M2-0244-01 REV CP-3
HAS BEEN SPLIT INTO THE FOLLOWING SHEETS:
M2-0244-01
M2-0244-01A

FSAR FIGURE 10.4-7

THIS DRAWING CREATED ELECTRONICALLY

CLASS II

LUMINANT
CPNPP
GLEN ROSE, TEXAS

FLOW DIAGRAM
CONDENSATE POLISHING SYSTEM

DWG. NO.	SH. NO.	REV.
M2-0244	01A	CP-15

REF DWG CP10 11-1-96

SSSSSSDATESSSSS

me965200.dgn A M2-0244-01A

< FINAL PRINT >

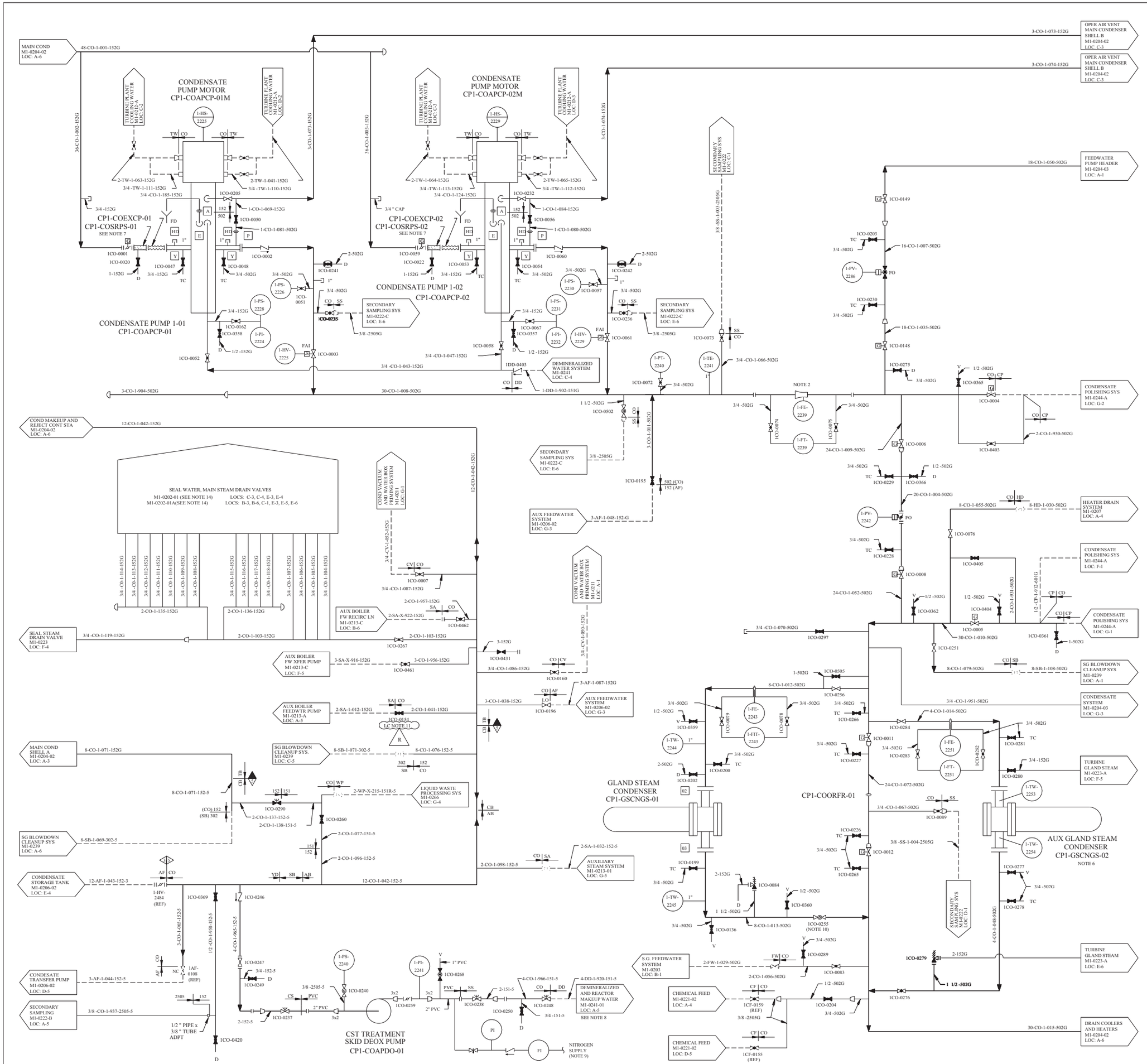

REV	DWN	CHK	APVD	REMARKS
CP-39	JSAC 09-14-2011	DLS 09-15-2011		THIS DRAWING REVISED TO INCORPORATE DESIGN CHANGE FDA 2009-003957-01-00 PER SK-0003-09-003957-01-00.

NOTES:

1. FOR MECHANICAL SYMBOLS AND NOTES SEE DRAWING M1-0200.
2. VENTURI FLOW ELEMENTS FITTED IN SPOOL PIECES WHICH ARE FACTORY CALIBRATED. SPOOL PIECES FLANGED INTO PIPING.
3. GLAND STEAM CONDENSER SUPPLIED BY ALLIS-CHALMERS POWER SYSTEMS INC.
4. TYPICAL CUSTOMERS PIPING CONNECTIONS ARE INDICATED AS FOLLOWS:
   CONDENSATE PUMPS 1-E
   GLAND STEAM COND. ACISI
5. DELETED
6. AUXILIARY GLAND STEAM CONDENSER SUPPLIED BY GENERAL ELECTRIC.
7. TEMPORARY STRAINER INSTALLED IN SPOOL PIECE DURING FLUSHING OPERATIONS AND INITIAL START-UP. THE TEMPORARY STRAINERS ARE TO BE REMOVED AFTER THE EXTRACTION STEAM AND HEATER DRAIN SYSTEMS ARE PUT INTO OPERATION. TEMPORARY STRAINERS CAN BE RE-INSTALLED FOR POST MAINTENANCE ACTIVITY.
8. CST TREATMENT SKID DEOX PUMP PIPING CONFIGURATION ALSO SHOWN ON AUXILIARY FEEDWATER FLOW DIAGRAM M1-0206-02 LOC: E-4 FOR CLARITY.
9. NITROGEN SUPPLY TO CONSIST OF LOW PRESSURE DEWARS CANISTERS.
10. 1CO-0255 IS A V-BALL VALVE WHICH DOES NOT SEAL AGAINST REVERSE FLOW.
11. VALVE 1CO-0154 IS LOCKED CLOSED TO ISOLATE THE ABANDONED IN PLACE ELECTRIC AUXILIARY BOILER.

R

THIS DRAWING CREATED ELECTRONICALLY

CLASS II

LUMINANT
CPNPP
GLEN ROSE, TEXAS

FLOW DIAGRAM
CONDENSATE SYSTEM

DWG. NO.	SH. NO.	REV.
M1-0204	-	CP-39

me103150.dgn A M1-0204

FINAL PRINT

REV	DWN	CHKD	APVD	REMARKS
CP-36	JRMC 12-10 2008	EES 12-10 2008		THIS DRAWING REVISED TO INCORPORATE DESIGN CHANGE FDA 2008-000795-02-00 PER SK-0001-08-000795-02-00.

NOTES:

1. FOR MECHANICAL NOTES AND SYMBOLS SEE DRAWING M1-0200.
2. VENTURI FLOW ELEMENTS FITTED IN SPOOL PIECES ARE FACTORY CALIBRATED. SPOOL PIECES FLANGED INTO PIPE.
3. HEATERS 5 AND 6, DRAIN COOLER BYPASS AND ISOLATION VALVES ARE CONTROLLED BY SHELL SIDE LEVEL SWITCHES, SHOWN ON M1-0207-A.
4. TYPICAL CUSTOMER'S PIPING CONNECTIONS ARE INDICATED AS FOLLOWS:

FEEDWATER HEATERS	SWC
AUX. COND.	I-R
MAIN COND.	W-HTD
DRAIN COOLERS	

5. 10'-0" LENGTH SPOOL PIECE FOR INSERTION OF FLOW MEASUREMENT SECTION DURING INITIAL PERFORMANCE TESTING.
6. * INDICATED RELIEF VALVES BY STRUTHERS WELLS CORP.
7. DELETED
8. LINE SHALL SLOPE CONTINUOUSLY DOWNWARD TOWARD CONDENSER.
9. VALVE FAILS CLOSED ON LOSS OF SIGNAL AND OPENS ON LOSS OF AIR.

FSAR FIGURE 10.4-8

THIS DRAWING CREATED ELECTRONICALLY

NON–SAFETY

LUMINANT
CPNPP
GLEN ROSE, TEXAS

FLOW DIAGRAM
CONDENSATE SYSTEM

DWG. NO.	SH. NO.	REV.
M1-0204	02	CP-36

REF CKD CP-22 11/15/96

$$$$$$$DATE$$$$$$

REV	DWN	CHKD	APVD	REMARKS
CP-20	DLK 09-21 2008	MM 09-21 2008		THIS DRAWING REVISED TO INCORPORATE DESIGN CHANGE FDA-2006-003080-20-01 PER SK-0001-06-003080-20-01. EDITORIAL CHANGES AS NOTED.

NOTES:

1. FOR MECHANICAL NOTES AND SYMBOLS SEE DRAWING M1-0200.
2. VENTURI FLOW ELEMENTS FITTED IN SPOOL PIECES ARE FACTORY CALIBRATED, SPOOL PIECES FLANGED INTO PIPING.
3. * INDICATES RELIEF VALVES BY STRUTHERS WELLS CORPORATION.
4. TYPICAL CUSTOMER'S PIPING CONNECTIONS ARE INDICATED AS FOLLOWS:

FEEDWATER HEATERS ⬡ SWC.

FSAR FIGURE 10.4-8

THIS DRAWING CREATED ELECTRONICALLY

NON–SAFETY

LUMINANT
CPNPP
GLEN ROSE, TEXAS

FLOW DIAGRAM
CONDENSATE SYSTEM

DWG. NO.	SH. NO.	REV.
M1-0204	03	CP-20

REF CHKD 6/18/2001

SSSSSSSDATESSSSSS

me904500.dgn M1-0204-03 < FINAL PRINT >

REV	DWN	CHK	APVD	REMARKS
CP-29	JSAC 09-14-2011	DLK 09-15-2011		THIS DRAWING REVISED TO INCORPORATE DESIGN CHANGE FDA-2009-003957-01-00 PER SK-0010-09-003957-01-00. EDITORIAL CHANGES AS NOTED.

NOTES:

1. VENTURI FLOW ELEMENTS WILL BE FITTED IN SPOOL PIECES WHICH WILL BE FACTORY CALIBRATED. SPOOL PIECES WILL THEN BE FLANGED INTO PIPING.
2. TYPICAL CUSTOMERS PIPING CONNECTIONS ARE INDICATED AS FOLLOWS:

⬡	SWC	FEEDWATER HEATERS
□	I-R	AUXILIARY CONDENSERS
○	W-HTD	MAIN CONDENSER
□	A-CPSI	GLAND STEAM CONDENSER
□	B-W	CONDENSATE PUMP

3. DELETED
4. AUXILIARY GLAND STEAM CONDENSER TO BE SUPPLIED BY GENERAL ELECTRIC.
5. TEMPORARY STRAINER INSTALLED IN SPOOL PIECE DURING FLUSHING OPERATIONS ONLY, MUST BE REMOVED PRIOR TO PLANT START-UP. TEMPORARY STRAINERS CAN BE RE-INSTALLED FOR POST MAINTENANCE ACTIVITY.
6. UNLESS OTHERWISE NOTED ALL DRAINS COLLECTED BY LOCAL DRAIN SYSTEM.
7. FOR MECHANICAL SYMBOLS AND NOTES SEE DRAWING M1-0200.
8. GLAND STEAM CONDENSER SUPPLIED BY ALLES-CHAMBERS POWER SYSTEMS INC.
9. VALVE MECHANICALLY SECURED IN THROTTLED POSITION. AIR OPERATOR RENDERED INOPERABLE, REFERENCE DCN 10158.
10. CST TREATMENT SKID DEOX PUMP PIPING CONFIGURATION ALSO SHOWN ON AUXILIARY FEEDWATER SYSTEM FLOW DIAGRAM M2-0206-02 LOC: E-4 FOR CLARITY.
11. NITROGEN SUPPLY TO CONSIST OF LOW PRESSURE DEWARS CANISTERS.
12. VALVE 2CO-0154 IS LOCKED CLOSED TO ISOLATE THE ABANDONED IN PLACE ELECTRIC AUXILIARY BOILER.

R

DRAWING M2-0204 REV CP-5 HAS BEEN SPLIT INTO THE FOLLOWING SHEETS:

- M2-0204
- M2-0204-02
- M2-0202-03

CLASS II

LUMINANT
CPNPP
GLEN ROSE, TEXAS

FLOW DIAGRAM
CONDENSATE SYSTEM

DWG. NO.	SH. NO.	REV.
M2-0204	-	CP-29

FSAR FIGURE 10.4-8

THIS DRAWING CREATED ELECTRONICALLY

REF CKD CP-16 6-30-98

me103160.dgn M2-0204 FINAL PRINT

REV	DWN	CHKD	APVD	REMARKS
CP-31	JRMC 05-02-2011	DLK 05-16-2011		THIS DRAWING REVISED TO INCORPORATE DESIGN CHANGE FDA-2011-000079-01-00 PER SK-0001-11-000079-01-00.

NOTES:

1. HEATERS 5 AND 6 BYPASS AND ISOLATION VALVES ARE CONTROLLED BY SHELL SIDE LEVEL SWITCHES SHOWN ON M2-0205.
2. TYPICAL CUSTOMERS PIPING CONNECTIONS ARE INDICATED AS FOLLOWS:
   - SWC — FEEDWATER HEATERS
   - I-R — AUXILIARY CONDENSERS
   - W-HTD — MAIN CONDENSER
   - A-CPSI — GLAND STEAM CONDENSER
   - B-W — CONDENSATE PUMP
3. DELETED
4. TUBE SIDE FEEDWATER HEATER RELIEF VALVES (INDICATED BY *) TO BE SUPPLIED BY STRUTHERS WELLS CO.
5. DELETED
6. LINE SHALL SLOPE CONTINUOUSLY DOWNWARD TOWARDS CONDENSER.
7. UNLESS OTHERWISE NOTED ALL DRAINS COLLECTED BY LOCAL DRAIN SYSTEM.
8. FOR MECHANICAL NOTES AND SYMBOLS SEE DRAWING M1-0200.
9. VALVE FAILS CLOSED ON LOSS OF SIGNAL AND OPEN ON LOSS OF AIR.
10. DELETED

FSAR FIGURE 10.4-8

THIS DRAWING CREATED ELECTRONICALLY

DRAWING M2-0204 REV CP-5 HAS BEEN SPLIT INTO THE FOLLOWING SHEETS:

M2-0204
M2-0204-02
M2-0204-03

NON–SAFETY

LUMINANT
CPNPP
GLEN ROSE, TEXAS

FLOW DIAGRAM
CONDENSATE SYSTEM

DWG. NO.	SH. NO.	REV.
M2-0204	02	CP-31

FINAL PRINT

REF CKD CP-18 12/12/97

me102200.dgn A M2-0204-02 B C D E F G H

REV	DWN	CHKD	APVD	REMARKS
CP-14	SM 04-17-2011	PLH 04-17-2011		THIS DRAWING REVISED TO INCORPORATE DESIGN CHANGE FDA-2008-001394-01-00 PER SK-0003-08-001394-01-00.

NOTES:

1. TYPICAL CUSTOMERS PIPING CONNECTIONS ARE INDICATED AS FOLLOWS:

⬡	SWC	FEEDWATER HEATERS
□	I-R	AUXILIARY CONDENSERS
○	W-HTD	MAIN CONDENSER
□	A-CPSI	GLAND STEAM CONDENSER
□	B-W	CONDENSATE PUMP

2. VENTURI FLOW ELEMENTS WILL BE FITTED IN SPOOL PIECES WHICH WILL BE FACTORY CALIBRATED. SPOOL PIECES WILL THEN BE FLANGED INTO PIPING.
3. TUBE SIDE FEEDWATER HEATER RELIEF VALVES (INDICATED BY *) TO BE SUPPLIED BY STRUTHERS WELLS COPY.
4. AUXILIARY GLAND STEAM CONDENSER TO BE SUPPLIED BY GENERAL ELECTRIC.
5. UNLESS OTHERWISE NOTED ALL DRAINS COLLECTED BY LOCAL DRAIN SYSTEM.
6. FOR MECHANICAL SYMBOLS AND NOTES SEE DWG M1-0200.

FSAR FIGURE 10.4-8

THIS DRAWING CREATED ELECTRONICALLY

DRAWING M2-0204 REV CP-5
HAS BEEN SPLIT INTO THE FOLLOWING SHEETS:

M2-0204
M2-0204-02
M2-0204-03

NON–SAFETY

LUMINANT
CPNPP
GLEN ROSE, TEXAS

FLOW DIAGRAM
CONDENSATE SYSTEM

DWG. NO.	SH. NO.	REV.
M2-0204	03	CP-14

FINAL PRINT

REF: CKD 12/3/97 CP-30

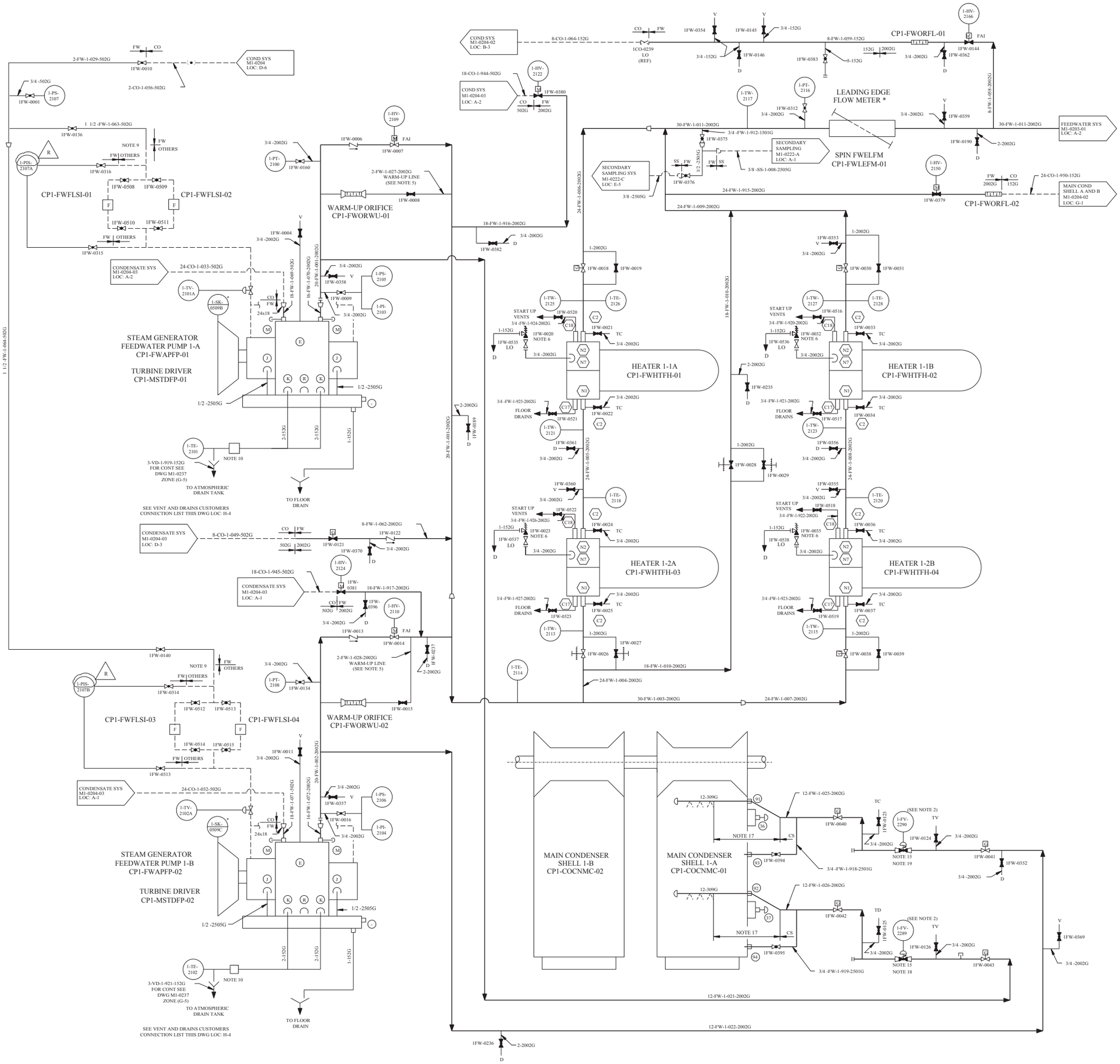

REV	DWN	CHKD	APVD	REMARKS
CP-29	DLK 09-14 2005	MM 09-14 2005		THIS DRAWING REVISED TO INCORPORATE DESIGN CHANGE FDA 2005-003545-01-00 PER SK-0001-05-003545-01-00.

NOTES:

1. INSTRUMENTS AND DEVICES IDENTIFIED WITH * ARE TO BE PROVIDED BY WESTINGHOUSE-SEE DWG 105D452 FOR BLOCK DIAGRAM.
2. SEE DWG M1-0204-03 FOR FLOW ELEMENT AND TRANSMITTER (LOC B-1, C-1 AND B-2, C-2).
3. DELETED
4. DESIGN CONDITIONS (FROM FEEDWATER PUMPS UP TO AND INCLUDING FEEDWATER ISOLATION VALVES): PRESSURE-1800 PSIG TEMPERATURE-400°-500° F.
5. WARM-UP BREAKDOWN ORIFICE TO BE SUPPLIED BY PUMP MANUFACTURER.
6. TUBE SIDE FEEDWATER HEATER RELIEF VALVES TO BE SUPPLIED BY STRUTHERS WELLS CORP.
7. DELETED
8. FOR MECHANICAL SYMBOLS AND NOTES SEE DWG M1-0200.
9. CUSTOMER'S 1 1/2 " SCH 40 PIPING CONNECTS TO PUMP MANUFACTURER'S SEAL INJECTION SYSTEM (1 1/2 " SW x 1 1/2 " NPT ADAPTER BY FIELD).
10. PROVISION FOR INSERTION OF PUMP MANUFACTURER'S SEAL INJECTION SYSTEM THERMOWELL IN CUSTOMER'S DRAIN PIPING.
11. DRAIN LINE TO SLOPE CONTINUOUSLY TO AUXILIARY DRAINS TANK.
12. TYPICAL CUSTOMER'S PIPING CONNECTIONS ARE INDICATED AS FOLLOWS:
    - FEEDWATER HEATERS
    - MAIN CONDENSER
    - STEAM GENERATOR FEEDWATER PUMPS
13. DELETED
14. DELETED
15. RECIRCULATION VALVES SUPPLIED WITH 12"x8" REDUCERS.
16. DELETED
17. PIPE AND FITTINGS TO BE 12" A335 GRADE P22 AND A234 GRADE WP22 SCH 140 RESPECTIVELY. PIPE END CONNECTION TO CONDENSER SPARGER SHALL BE BORED TO 12" STANDARD WALL.
18. VALVE FAILS CLOSED ON LOSS OF SIGNAL AND OPEN ON LOSS OF AIR. VALVE OPENS ON LOSS OF SIGNAL IN CONJUNCTION WITH LOW FLOW VIA 1-FS-2289.
19. VALVE FAILS CLOSED ON LOSS OF SIGNAL AND OPEN ON LOSS OF AIR. VALVE OPENS ON LOSS OF SIGNAL IN CONJUNCTION WITH LOW FLOW VIA 1-FS-2290.

CUSTOMER CONNECTION LIST

CONN	NOTES	DESCRIPTION OF SERVICE
(E)	3/4 " SOCKET WELD	VENT CONNECTION - 3/4 " SCH 80 PIPE WITH PROTECTIVE CAP
(J)	1/2 " NPT x 3/4 " SW ADAPTER - BY FIELD	AUXILIARY (SECONDARY) STUFFING BOX LEAKAGE CONNECTIONS
(K)	2" NPT x 2" SW ADAPTER - BY FIELD	PRIMARY STUFFING BOX LEAKAGE CONNECTION
(M)	3/4 " NPT - CAPPED	GAUGE CONNECTION
(N)	1/2 " NPT - PLUGGED	INSPECTION LOCATION
(R)	3/4 " NPT - PLUGGED	CASE DRAIN CONNECTION LEFT PLUGGED AT OWNERS REQUEST
(-)	1" NPT - PLUGGED TYPICAL BY FIELD	TROUGH DRAIN

FSAR FIGURE 10.4-9

THIS DRAWING CREATED ELECTRONICALLY

NON-SAFETY

TXU POWER
CPSES
GLEN ROSE, TEXAS

FLOW DIAGRAM
STEAM GENERATOR
FEEDWATER SYSTEM

DWG. NO.	SH. NO.	REV.
M1-0203	-	CP-29

REF CKD 5-19-98 CP-26

REV	DWN	CHKD	APVD	REMARKS
CP-25	SJL 07-11-2005	GJW 05-12-2006		THIS DRAWING REVISED TO INCORPORATE DESIGN CHANGE FDA-2005-000224-02-00 PER SK-0015-05-000224-02-00. EDITORIAL CHANGES AS NOTED.

NOTES:

1. INSTRUMENTS AND DEVICES IDENTIFIED WITH * ARE TO BE PROVIDED BY WESTINGHOUSE. SEE DWG 1OSD452 FOR BLOCK DIAGRAM.

2. FEEDWATER SYSTEM PIPING FROM MOMENT RESTRAINTS UPSTREAM OF CHECK VALVES AND FEEDWATER ISOLATION VALVES TO STEAM GENERATOR FEEDWATER INLET NOZZLES IS DESIGNATED NUCLEAR SAFETY CLASS 2.

3. DESIGN CONDITIONS (FROM FEEDWATER PUMPS UP TO AND INCLUDING FEEDWATER ISOLATION VALVES.) PRESSURE 1800 PSIG TEMP 400° F-500° F.

4. DELETED

5. FOR MECHANICAL SYMBOLS AND NOTES SEE DWG M1-0200.

6. FEEDWATER ISOLATION VALVE FAILS CLOSED ON LOSS OF HYDRAULIC FLUID, ON LOSS OF ELECTRIC POWER IT DOES NOT FAIL CLOSED.

7. DELETED

8. UNLESS OTHERWISE NOTED, ALL DRAINS COLLECTED BY LOCAL DRAIN SYSTEM.

9. THESE THERMOWELLS ARE PROVIDED WITH THREADED PLUGS.

10. THE FOLLOWING HEATERS ARE EXTERNAL ELECTRIC RESISTANCE HEATERS USED TO MAINTAIN THE CORRESPONDING VALVE BODY ABOVE THE LOW TEMPERATURE BRITTLE FRACTURE THRESHOLD DURING FEEDWATER SYSTEM START-UP CONDITIONS.

HEATER	VALVE	TEMPERATURE INDICATOR
CP1-HTEHNB-01	1-HV-2134	1-TI-2152-1
CP1-HTEHNB-02	1-HV-2135	1-TI-2152-2
CP1-HTEHNB-03	1-HV-2136	1-TI-2152-3
CP1-HTEHNB-04	1-HV-2137	1-TI-2152-4

11. REFER TO DCN-8010 AND ONE FORM 94-0718 FOR INSTALLED PIPING CATEGORY DOWNSTREAM OF MOMENT RESTRAINTS CP1-FWSSMR-13 , CP1-FWSSMR-14 , CP1-FWSSMR-15 AND CP1-FWSSMR-16 .

12. LOCKED CLOSED IN MODES 1-3 TO ENSURE AFW SYSTEM OPERABILITY. LOCKED CLOSED IN MODES 1-4 FOR CONTAINMENT ISOLATION.

FSAR FIGURE 10.4-9

THIS DRAWING CREATED ELECTRONICALLY

DRAWING 2323-M1-0203-01 REV CP-5
HAS BEEN SPLIT INTO THE FOLLOWING SHEETS:
M1-0203-01
M1-0203-01A

CLASS I
(NUCLEAR SAFETY-RELATED)
SAFETY CLASS 1 — SEISMIC CATEGORY I
SAFETY CLASS 2 — CLASS 1E
SAFETY CLASS 3 — ASSOCIATED CIRCUITS

LUMINANT
CPSES
GLEN ROSE, TEXAS

FLOW DIAGRAM
STEAM GENERATOR
FEEDWATER SYSTEM

DWG. NO. M1-0203 | SH. NO. 01 | REV. CP-25

FINAL PRINT

REF CHKD 11/27/2000 CP-22

me765300.dgn M1-0203-01

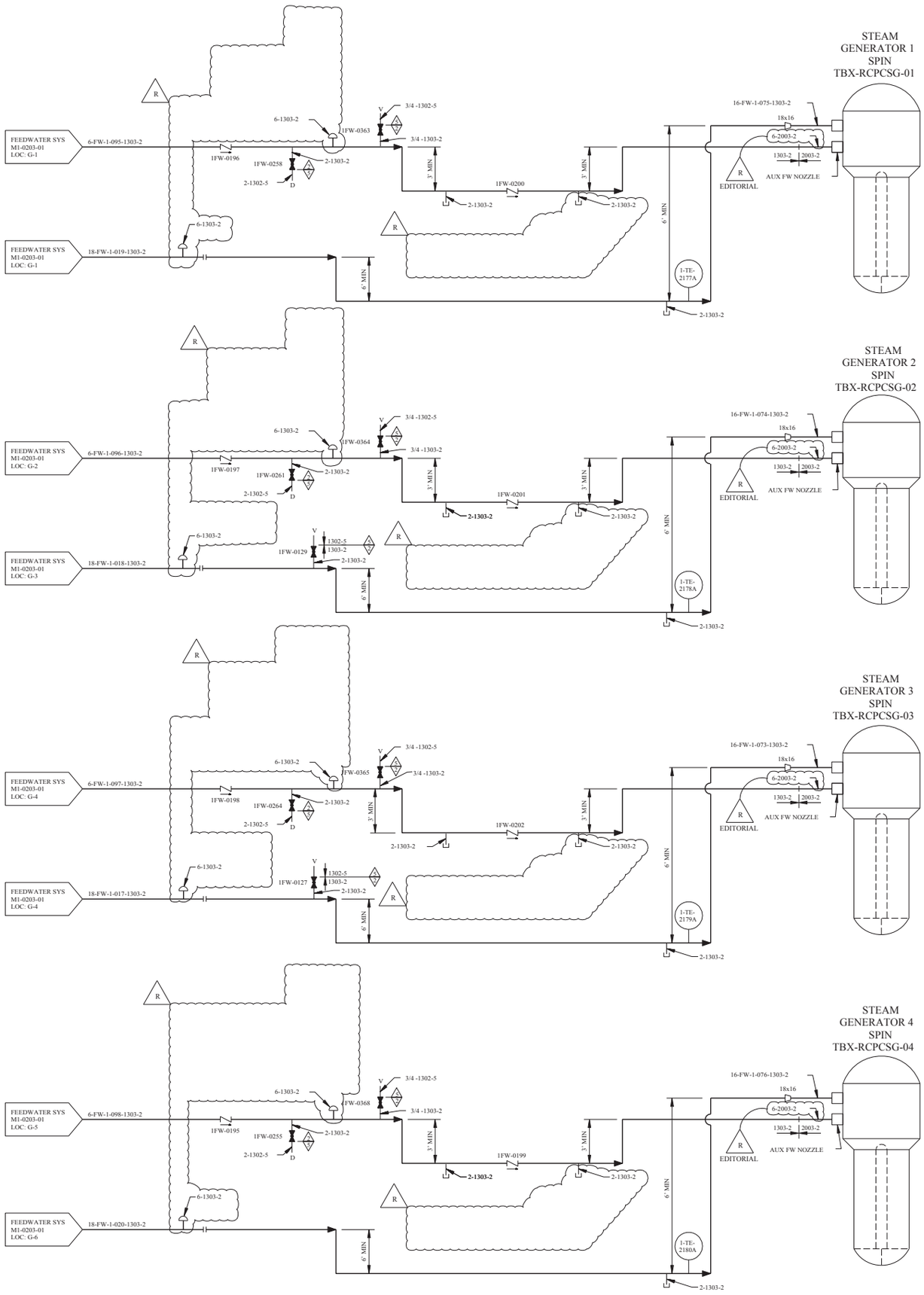

REV	DWN	CHKD	APVD	REMARKS
CP-15	DJS 04-17-2007	DLS 04-17-2007		THIS DRAWING REVISED TO INCORPORATE DESIGN CHANGE FDA-2005-000224-02-00 PER SK-0016-05-000224-02-00. EDITORIAL CHANGES AS NOTED.

NOTES:

1. FEEDWATER SYSTEM PIPING FROM MOMENT RESTRAINTS UPSTREAM OF CHECK VALVES AND FEEDWATER ISOLATION VALVES TO STEAM GENERATOR FEEDWATER INLET NOZZLES IS DESIGNATED NUCLEAR SAFETY CLASS 2.
2. FOR MECHANICAL SYMBOLS AND NOTES SEE DRAWING M1-0200.
3. UNLESS OTHERWISE NOTED, ALL DRAINS COLLECTED BY LOCAL DRAIN SYSTEM.
4. DELETED

FSAR FIGURE 10.4-9

THIS DRAWING CREATED ELECTRONICALLY

DRAWING 2323-M1-0203-01 REV CP-5
HAS BEEN SPLIT INTO THE FOLLOWING SHEETS:
M1-0203-01
M1-0203-01A

CLASS I
(NUCLEAR SAFETY-RELATED)
SAFETY CLASS 1 — SEISMIC CATEGORY I
SAFETY CLASS 2 — CLASS 1E
SAFETY CLASS 3 — ASSOCIATED CIRCUITS

LUMINANT
CPSES
GLEN ROSE, TEXAS

FLOW DIAGRAM
STEAM GENERATOR
FEEDWATER SYSTEM

DWG. NO.	SH. NO.	REV.
M1-0203	01A	CP-15

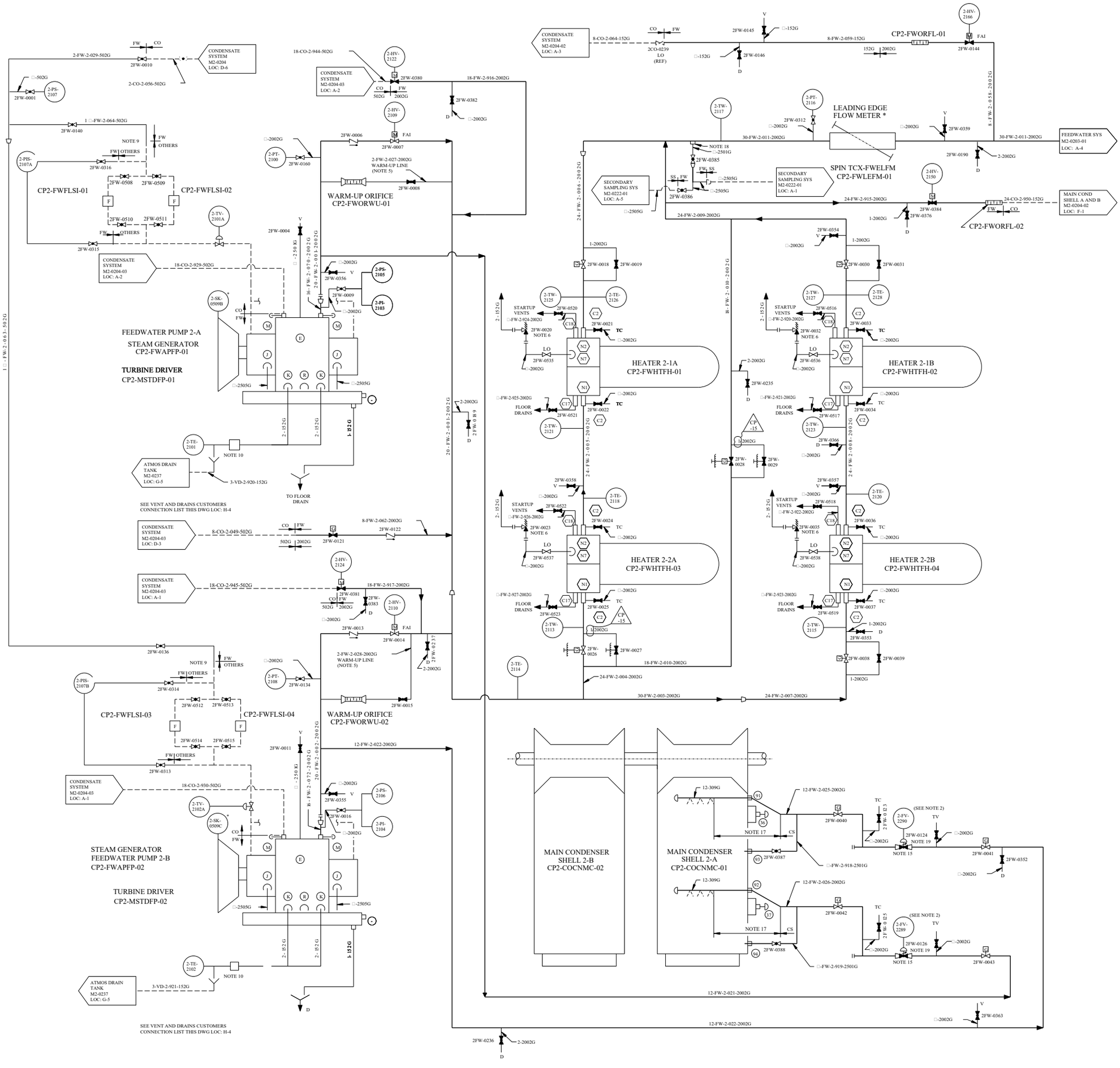

REV	DWN	CHKD	APVD	REMARKS
CP-15	DLK 03-21-2016	MM 03-21-2016	MHF 03-21-2016	THIS DRAWING REVISED TO INCORPORATE AI-CR-2016-002451-1 TO EDITORIALLY CORRECT BY-PASS LINE SIZE ON FROM 2-2002G TO 1-2002G.

NOTES:

1. INSTRUMENTS AND DEVICES IDENTIFIED WITH * ARE TO BE PROVIDED BY WESTINGHOUSE SEE DWG 10SD452 FOR BLOCK DIAGRAM.
2. SEE DWG M2-0204-03 (LOC: C-1, C-2) FOR FLOW ELEMENT AND TRANSMITTER.
3. DELETED
4. DESIGN CONDITIONS (FROM FEEDWATER PUMPS UP TO AND INCLUDING FEEDWATER ISOLATION VALVES): PRESSURE-1800 PSIG, TEMPERATURE-400□-500□ F.
5. WARM-UP BREAKDOWN ORIFICE TO BE SUPPLIED BY PUMP MANUFACTURER.
6. TUBE SIDE FEEDWATER HEATER RELIEF VALVES TO BE SUPPLIED BY STRUTHERS WELLS CORP.
7. DELETED
8. FOR MECHANICAL SYMBOLS AND NOTES SEE DWG M1-0200.
9. CUSTOMER'S 1□" SCH 40 PIPING CONNECTS TO PUMP MANUFACTURER'S SEAL INJECTION SYSTEM (1□" SW X 1□" NPT ADAPTER BY FIELD).
10. PROVISION FOR INSERTION OF PUMP MANUFACTURER'S SEAL INJECTION SYSTEM THERMOWELL IN CUSTOMER'S DRAIN PIPING.
11. DRAIN LINE TO SLOPE CONTINUOUSLY TO AUXILIARY DRAINS TANK.
12. TYPICAL CUSTOMER'S PIPING CONNECTIONS ARE INDICATED AS FOLLOWS:
    - FEEDWATER HEATERS
    - MAIN CONDENSER
    - K — STEAM GENERATOR FEEDWATER PUMPS
13. DELETED
14. DELETED
15. RECIRCULATION VALVES SUPPLIED WITH 12"x8" REDUCERS.
16. DELETED
17. PIPE AND FITTINGS TO BE 12"A335 GRADE P22 AND A234 GRADE WP22 SCH 140 RESPECTIVELY. PIPE END CONNECTION TO CONDENSER SPARGER SHALL BE BORED TO 12" STANDARD WALL.
18. □" 2501G SAMPLING TAP TO BE FINISHED WITH 45□ OPEN END AND PROTRUDED FROM BELOW □" VERTICALLY INSIDE THE 30" 2002G PIPE THROUGH A □" 6000 LB A105 HALF COUPLING SERVED AS REINFORCEMENT. THE CHAMFERRED SURFACE OF THE OPEN END SHOULD BE ORIENTED FAVORABLY UPSTREAM TO FACILITATE SAMPLE FLOW.
19. VALVE FAILS CLOSED ON LOSS OF SIGNAL AND OPEN ON LOSS OF AIR. VALVE OPENS ON LOSS OF SIGNAL IN CONJUNCTION WITH LOW FLOW VIA 2-FS-2289 AND 90.

CUSTOMER CONNECTION LIST

CONN	NOTES	DESCRIPTION OF SERVICE
E	□" SOCKET WELD	VENT CONNECTION - □" SCH 80 PIPE WITH PROTECTIVE CAP
J	□" NPT x □" SW ADAPTER - BY FIELD	AUXILIARY (SECONDARY) STUFFING BOX LEAKAGE CONNECTIONS
K	2" NPT x 2" SW ADAPTER - BY FIELD	PRIMARY STUFFING BOX LEAKAGE CONNECTION
M	□" NPT - CAPPED	GAUGE CONNECTION
N	□" NPT - PLUGGED	INSPECTION LOCATION
R	□" NPT - PLUGGED	CASE DRAIN CONNECTION LEFT PLUGGED AT OWNERS REQUEST
·	1" NPT - PLUGGED TYPICAL BY FIELD	TROUGH DRAIN

FSAR FIGURE 10.4-9

THIS DRAWING CREATED ELECTRONICALLY

NON-SAFETY

LUMINANT
CPNPP
GLEN ROSE, TEXAS

FLOW DIAGRAM
STEAM GENERATOR
FEEDWATER SYSTEM

DWG. NO.	SH. NO.	REV.
M2-0203	-	CP-15

REF CKD 05/13/97 CP-12

mc0000nr.dgn A M2-0203 FINAL PRINT

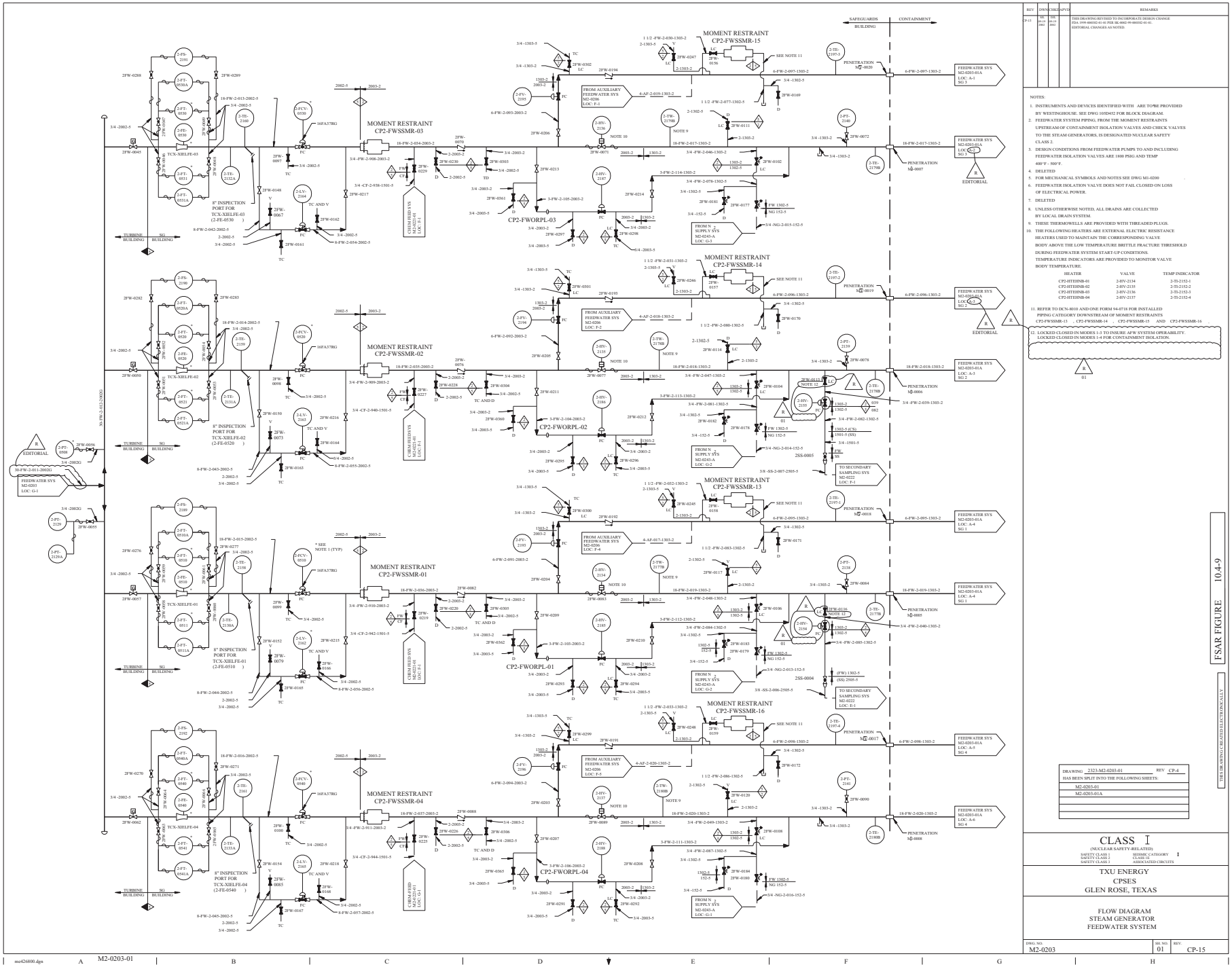

REV	DWN	CKD	APVD	REMARKS
P-11	SK 06-18-2002	DMC 06-19-2002		THIS DRAWING REVISED TO INCORPORATE DESIGN CHANGE FDA 1999-000102-01-01 PER SK-0002-99-000102-01-01. EDITORIAL CHANGES AS NOTED.

NOTES:

1. INSTRUMENTS AND DEVICES IDENTIFIED WITH ARE TO BE PROVIDED BY WESTINGHOUSE. SEE DWG 1605D452 FOR BLOCK DIAGRAM.
2. FEEDWATER SYSTEM PIPING, FROM THE MOMENT RESTRAINTS UPSTREAM OF CONTAINMENT ISOLATION VALVES AND CHECK VALVES TO THE STEAM GENERATORS, IS DESIGNATED NUCLEAR SAFETY CLASS 2.
3. DESIGN CONDITIONS FROM FEEDWATER PUMPS TO AND INCLUDING FEEDWATER ISOLATION VALVES ARE 1800 PSIG AND TEMP 400°F - 500°F.
4. DELETED
5. FOR MECHANICAL SYMBOLS AND NOTES SEE DWG M1-0200
6. FEEDWATER ISOLATION VALVE DOES NOT FAIL CLOSED ON LOSS OF ELECTRICAL POWER.
7. DELETED
8. UNLESS OTHERWISE NOTED, ALL DRAINS ARE COLLECTED BY LOCAL DRAIN SYSTEM.
9. THESE THERMOWELLS ARE PROVIDED WITH THREADED PLUGS.
10. THE FOLLOWING HEATERS ARE EXTERNAL ELECTRIC RESISTANCE HEATERS USED TO MAINTAIN THE CORRESPONDING VALVE BODY ABOVE THE LOW TEMPERATURE BRITTLE FRACTURE THRESHOLD DURING FEEDWATER SYSTEM START-UP CONDITIONS. TEMPERATURE INDICATORS ARE PROVIDED TO MONITOR VALVE BODY TEMPERATURE.

HEATER	VALVE	TEMP INDICATOR
CP2-HTEHNB-01	2-HV-2134	2-TI-2152-1
CP2-HTEHNB-02	2-HV-2135	2-TI-2152-2
CP2-HTEHNB-03	2-HV-2136	2-TI-2152-3
CP2-HTEHNB-04	2-HV-2137	2-TI-2152-4

11. REFER TO DCN-8010 AND ONE FORM 94-0718 FOR INSTALLED PIPING CATEGORY DOWNSTREAM OF MOMENT RESTRAINTS CP2-FWSSMR-13 , CP2-FWSSMR-14 , CP2-FWSSMR-15 AND CP2-FWSSMR-16
12. LOCKED CLOSED IN MODES 1-3 TO INSURE AFW SYSTEM OPERABILITY. LOCKED CLOSED IN MODES 1-4 FOR CONTAINMENT ISOLATION.

FSAR FIGURE 10.4-9

THIS DRAWING CREATED ELECTRONICALLY

DRAWING: 2323-M2-0203-01 REV CP-4
HAS BEEN SPLIT INTO THE FOLLOWING SHEETS:
M2-0203-01
M2-0203-01A

CLASS I
(NUCLEAR SAFETY-RELATED)
SAFETY CLASS 1 SAFETY CLASS 2 SAFETY CLASS 3
SEISMIC CATEGORY I
CLASS 1E ASSOCIATED CIRCUITS

TXU ENERGY
CPSES
GLEN ROSE, TEXAS

FLOW DIAGRAM
STEAM GENERATOR
FEEDWATER SYSTEM

DWG NO.	SH. NO.	REV.
M2-0203	01	CP-15

REF CKD 1 (2/2300 CP-14

$$$$$$$DATA$$$$$$$

mo426800.dgn

M2-0203-01

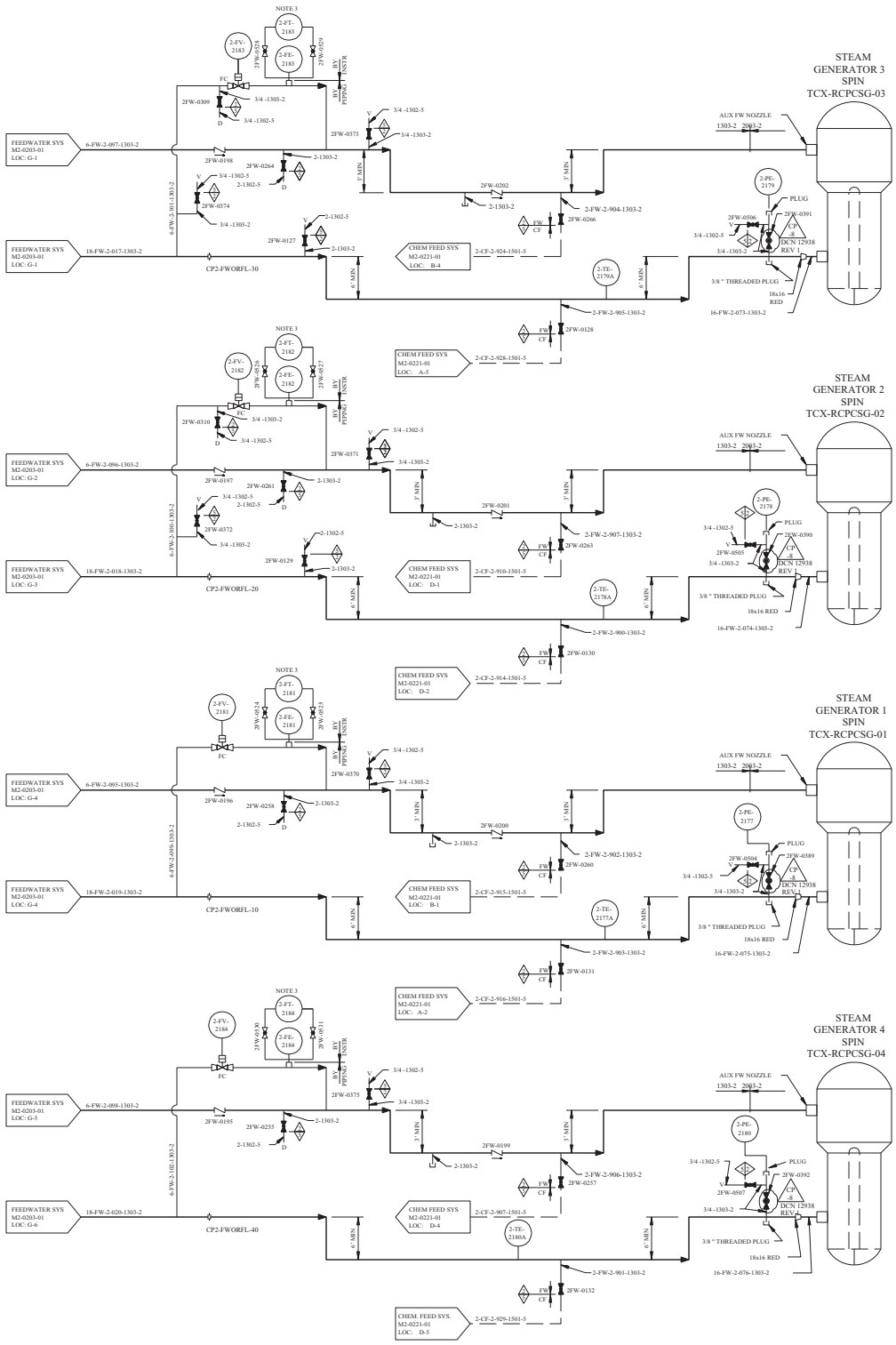

REV	DWN	CHKD	APVD	REMARKS
CP-8	RG 06-15 1999			THIS DRAWING REVISED TO INCORPORATE DESIGN CHANGE DCN 12938 REV 1.

NOTES

1. FEEDWATER SYSTEM PIPING, FROM THE MOMENT RESTRAINTS UPSTREAM OF CONTAINMENT ISOLATION VALVES AND CHECK VALVES TO THE STEAM GENERATORS, IS DESIGNATED NUCLEAR SAFETY CLASS 2.
2. FOR MECHANICAL SYMBOLS AND NOTES SEE DWG M1-0200.
3. INSTRUMENT VALVES FOR 2-FT-2181 , 2182 , 2183 AND 2184 ARE TO BE PROVIDED BY INSTRUMENTATION.
4. UNLESS OTHERWISE NOTED ALL DRAINS ARE COLLECTED BY LOCAL DRAIN SYSTEM.

FSAR FIGURE 10.4-9

THIS DRAWING CREATED ELECTRONICALLY

DRAWING 2323-M2-0203-01 REV CP-4
HAS BEEN SPLIT INTO THE FOLLOWING SHEETS:

M2-0203-01
M2-0203-01A

CLASS I
(NUCLEAR SAFETY-RELATED)
SAFETY CLASS 1 SEISMIC CATEGORY I
SAFETY CLASS 2 CLASS IE
SAFETY CLASS 3 ASSOCIATED CIRCUITS

TXU ELECTRIC
CPSES
GLEN ROSE, TEXAS

FLOW DIAGRAM
STEAM GENERATOR
FEEDWATER SYSTEM

DWG. NO. M2-0203 | SH. NO. 01A | REV. CP-8

$$$$$$$DATE$$$$$$

me0001k1.dgn

REV	DWN	CHK	APVD	REMARKS
CP-27	JRMC 07-28-2004	DJL 07-28-2004		THIS DRAWING REVISED TO INCORPORATE DESIGN CHANGE FDA 2003-001603-01-01 PER SK-0002-03-001603-01-01.

NOTES:

1. FOR MECHANICAL SYMBOLS AND NOTES, SEE DRAWING M1-0200.
2. ITEMS INDICATED ARE SUPPLIED BY HEAT EXCHANGER MANUFACTURER.
3. DENOTES RADIOACTIVE WASTE MANAGEMENT SYSTEM - CONTINUES ON IDENTIFIED DRAWING.
4. FLUID SYSTEM CONNECTED TO THE SHELL SIDE OF THE STEAM GENERATOR BLOWDOWN HEAT EXCHANGER AND ALL PIPING CONNECTIONS ATTACHED OR LEADING THERETO ARE NOT PART OF THE RWMS.
5. ** DENOTES EQUIPMENT USED IN MITIGATION OF HELB.
6. * DENOTES INSTRUMENT VALVES FURNISHED WITH FLOW ELEMENT.
7. INDICATES EQUIPMENT SUPPLIED BY DEMINERALIZER MANUFACTURER.

STEAM GENERATOR BLOWDOWN HEAT EXCHANGER CP1-SBAHSB-01

STEAM GENERATOR BLOWDOWN FILTER CP1-SBFLSB-02

STEAM GENERATOR BLOWDOWN FILTER CP1-SBFLSB-01

S G BLOWDOWN MIX BED RESIN TRAP CP1-SBSRRT-02

FSAR FIGURE 10.4-10

THIS DRAWING CREATED ELECTRONICALLY

CLASS II

LUMINANT
CPSES
GLEN ROSE, TEXAS

FLOW DIAGRAM
STEAM GENERATOR BLOWDOWN
CLEANUP SYSTEM

DWG. NO.	SH. NO.	REV.
M1-0239	-	CP-27

FINAL PRINT

REF CHECKED CP-23 05/25/99

me620000.dgn M1-0239

REV	DWN	CHK	APVD	REMARKS
CP-17	DLK 05-03 2017	MM 05-04 2017	MHF 05-08 2017	THIS DRAWING REVISED TO EDITORIALLY CORRECT DRAWING PER AI-TR-2017-005929-1.

NOTES:

1. SYSTEM VALVES ARE ARRANGED FOR NORMAL OPERATION. DEMINERALIZERS ARE BYPASSED WHEN EFFLUENT FLOWS TO CONDENSER.
2. INDICATES ITEM SUPPLIED BY DEMINERALIZER MANUFACTURER.
3. FOR MECHANICAL SYMBOLS AND NOTES SEE DRAWING M1-0200.
4. DENOTES RADIOACTIVE WASTE MANAGEMENT SYSTEM CONTINUES ON DRAWING IDENTIFIED.
5. DELETED

FSAR FIGURE 10.4-10

THIS DRAWING CREATED ELECTRONICALLY

CLASS II

LUMINANT
CPNPP
GLEN ROSE, TEXAS

FLOW DIAGRAM
STEAM GENERATOR BLOWDOWN
CLEANUP SYSTEM

DWG. NO.	SH. NO.	REV.
M1-0239	01	CP-17

mc371100.dgn A M1-0239-01 FINAL PRINT

REV	DWN	CHK	APVD	REMARKS
CP-18	DLK 09-30 2015	MM 09-30 2015	MHF 10-01 2015	THIS DRAWING REVISED TO INCORPORATE AI-CR-2015-008786-1 TO EDITORIALLY ADD ROOT VALVE LOCATION (TAG) 2SB-0174 FOR 2-PT-5183.

LEGEND:

F - FILTER

S - STRAINER

R - VENDOR NOZZLE NUMBER

NOTES:

1. ITEMS INDICATED ARE SUPPLIED BY DEMINERALIZER MANUFACTURER.
2. FOR MECHANICAL SYMBOLS AND NOTES, SEE DRAWING M1-0200.
3. ITEMS INDICATED ARE SUPPLIED BY HEAT EXCHANGER MANUFACTURER.
4. DENOTES RADIOACTIVE WASTE MANAGEMENT SYSTEM CONTINUES ON IDENTIFIED DRAWING.
5. THE FLUID SYSTEM CONNECTED TO THE SHELL SIDE OF THE STEAM GENERATOR BLOWDOWN HEAT EXCHANGER AND ALL PIPING CONNECTED ATTACHED TO OR LEADING THERE TO ARE NOT PART OF THE RWMS.
6. FLOW AT ALL TEST CONNECTIONS, VENTS, AND DRAINS SHOULD BE DIRECTED AWAY FROM THE PROCESS PIPING.
7. ** DENOTES EQUIPMENT USED IN MITIGATION OF HELB.
8. * INDICATES INSTRUMENT VALVES FURNISHED WITH FLOW ELEMENT.
9. INCORPORATION OF UNIT 1 DM 89-09.
10. INCORPORATION OF UNIT 1 DM 89-101.
11. JOINT HAS BEEN TEAM LEAKED BUT IS NO LONGER TRACKED UNDER THE TEMP MOD PROCESS. ANY FURTHER REWORK SHOULD BE ADDRESSED BY THE NORMAL WORK ORDER PROCESS.

STEAM GENERATOR BLOWDOWN HEAT EXCHANGER CP2-SBAHSB-01

STEAM GENERATOR BLOWDOWN FILTER CP2-SBFLSB-01

STEAM GENERATOR BLOWDOWN FILTER CP2-SBFLSB-02

STEAM GENERATOR BLOWDOWN MIX BED RESIN TRAP CP2-SBSRRT-02

DRAWING 2323-M2-0239 REV CP-3
HAS BEEN SPLIT INTO THE FOLLOWING SHEETS:
M2-0239
M2-0239-01

THIS DRAWING CREATED ELECTRONICALLY

FSAR FIGURE 10.4-10

CLASS II

LUMINANT
CPNPP
GLEN ROSE, TEXAS

FLOW DIAGRAM
STEAM GENERATOR BLOWDOWN
CLEANUP SYSTEM

DWG. NO. M2-0239 | SH. NO. - | REV. CP-18

< FINAL PRINT >

me102170.dgn M2-0239

REF CKD CP9 11-1-96

$$$$$$$$DATE$$$$$$

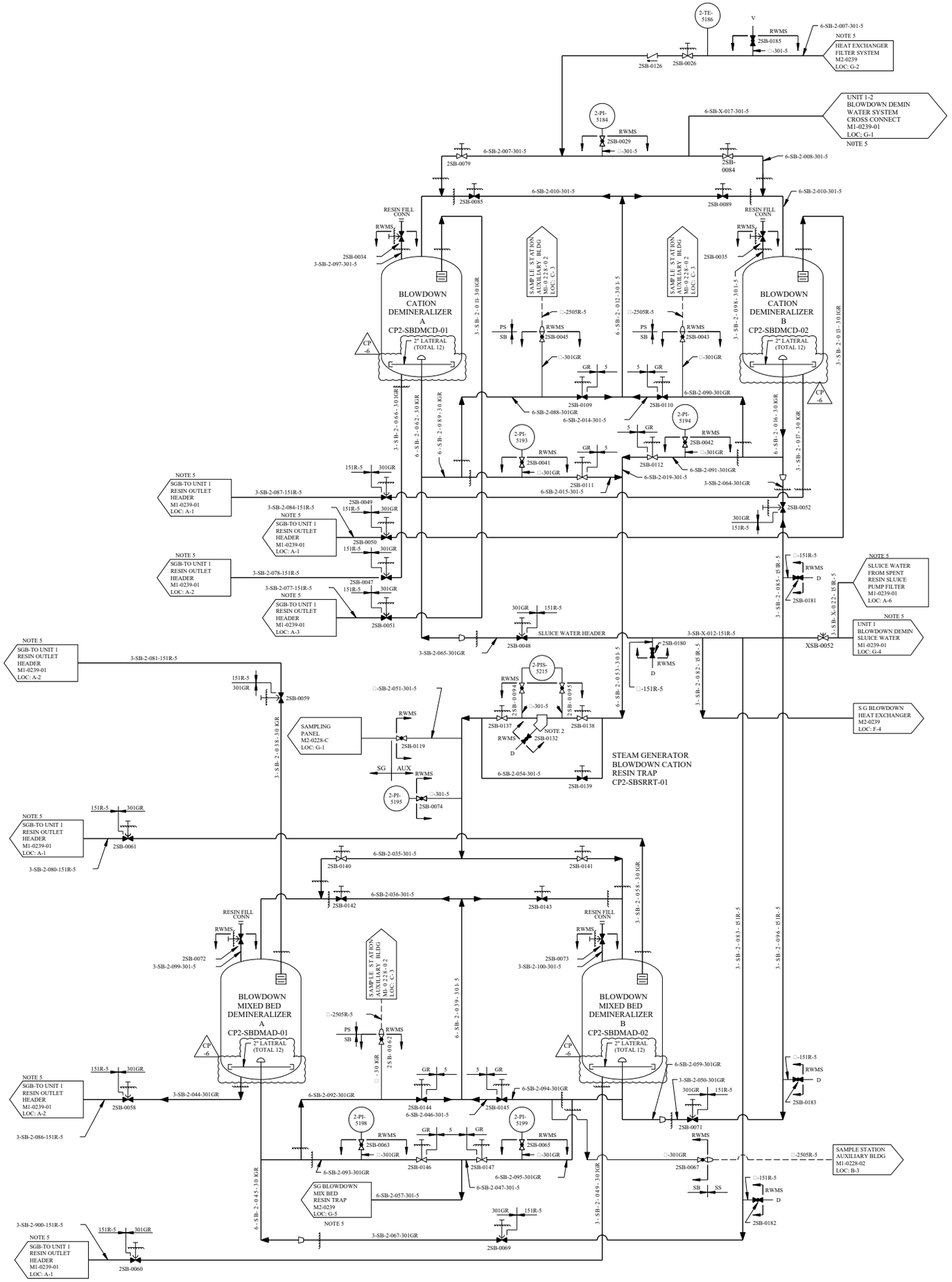

REV	DWN	CHK	APVD	REMARKS
CP-6	DLK 05-03-2017	MM 05-04-2017	MHF 05-08-2017	THIS DRAWING REVISED TO EDITORIALLY CORRECT DRAWING PER AI-TR-2017-005929-1.

CP -6

NOTES:

1. SYSTEM VALVES ARE ARRANGED FOR NORMAL OPERATION, DEMINERALIZERS ARE BYPASSED WHEN EFFLUENT FLOWS TO CONDENSER.
2. ITEMS INDICATED ARE SUPPLIED BY DEMINERALIZER MANUFACTURER.
3. FOR MECHANICAL SYMBOLS AND NOTES, SEE DRAWING M1-0200.
4. **ITEMS INDICATED ARE SUPPLIED BY HEAT EXCHANGER MANUFACTURER.**
5. DENOTES RADIOACTIVE WASTE MANAGEMENT SYSTEM CONTINUES ON IDENTIFIED DRAWING.

FSAR FIGURE 10.4-10

THIS DRAWING CREATED ELECTRONICALLY

DRAWING 2323-M2-0239 REV CP-3
HAS BEEN SPLIT INTO THE FOLLOWING SHEETS:

M2-0239
M2-0239-01

CLASS II

LUMINANT
CPNPP
GLEN ROSE, TEXAS

FLOW DIAGRAM
STEAM GENERATOR BLOWDOWN
CLEANUP SYSTEM

DWG. NO.	SH. NO.	REV.
M2-0239	01	CP-6

FINAL PRINT

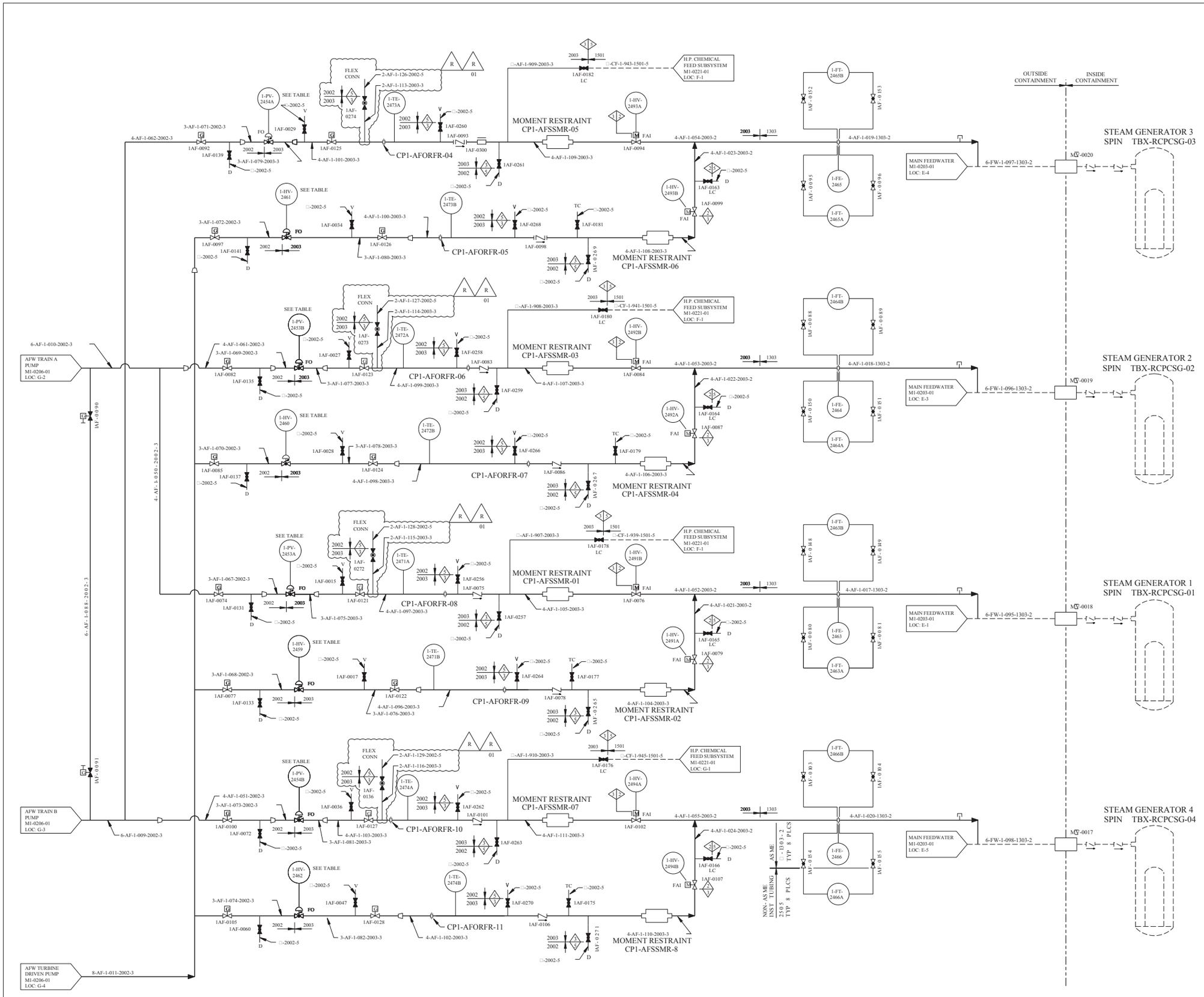

REV.	DWN	CHK	APVD	REMARKS
CP-21	DLK 08-27-2014	MM 09-02-2014		THIS DRAWING REVISED TO INCORPORATE DESIGN CHANGE FDA 2013-000008-01-01 PER SK-0001-13-000008-01-01.

NOTES:

1. FOR MECHANICAL SYMBOLS AND NOTES SEE DRAWING M1-0200.
2. CAPS WILL NOT BE PROVIDED ON VENT AND DRAIN LINES UNLESS OTHERWISE NOTED.
3. UNLESS OTHERWISE NOTED, DRAINS COLLECTED BY LOCAL DRAIN SYSTEM UNDER ADMINISTRATIVE CONTROL.
4. DELETED
5. REMOVE CHECK VALVE INTERNALS, ABANDON VALVE BODY 1AF-0300 IN PLACE.

R R 01

TABLE

CONTROL VALVE	SAFETY CLASS 3 AIR ACCUMULATOR
1-HV-2461	CP1-CIATAF-01 CP1-CIATAF-11
1-PV-2454A	CP1-CIATAF-02 CP1-CIATAF-16
1-PV-2454B AND 1-FV-2457	CP1-CIATAF-03 CP1-CIATAF-15
1-HV-2462	CP1-CIATAF-04 CP1-CIATAF-12
1-HV-2460	CP1-CIATAF-05 CP1-CIATAF-09
1-HV-2459	CP1-CIATAF-06 CP1-CIATAF-10
1-PV-2453A	CP1-CIATAF-07 CP1-CIATAF-14
1-PV-2453B AND 1-FV-2456	CP1-CIATAF-08 CP1-CIATAF-13

FSAR FIGURE 10.4-11

THIS DRAWING CREATED ELECTRONICALLY

DRAWING 2323-M1-0206 REV CP-5
HAS BEEN SPLIT INTO THE FOLLOWING SHEETS:

M1-0206
M1-0206-01
M1-0206-02

CLASS I
(NUCLEAR SAFETY-RELATED)
SAFETY CLASS 1 SEISMIC CATEGORY I
SAFETY CLASS 2 CLASS 1E
SAFETY CLASS 3 ASSOCIATED CIRCUITS

LUMINANT
CPNPP
GLEN ROSE, TEXAS

FLOW DIAGRAM
AUXILIARY FEEDWATER
SYSTEM

DWG. NO.	SH. NO.	REV.
M1-0206	-	CP-21

$$$$$$$DATE$$$$$$$ REF CKD CP- R 6-22-98

me765400.dgn A M1-0206 < FINAL PRINT >

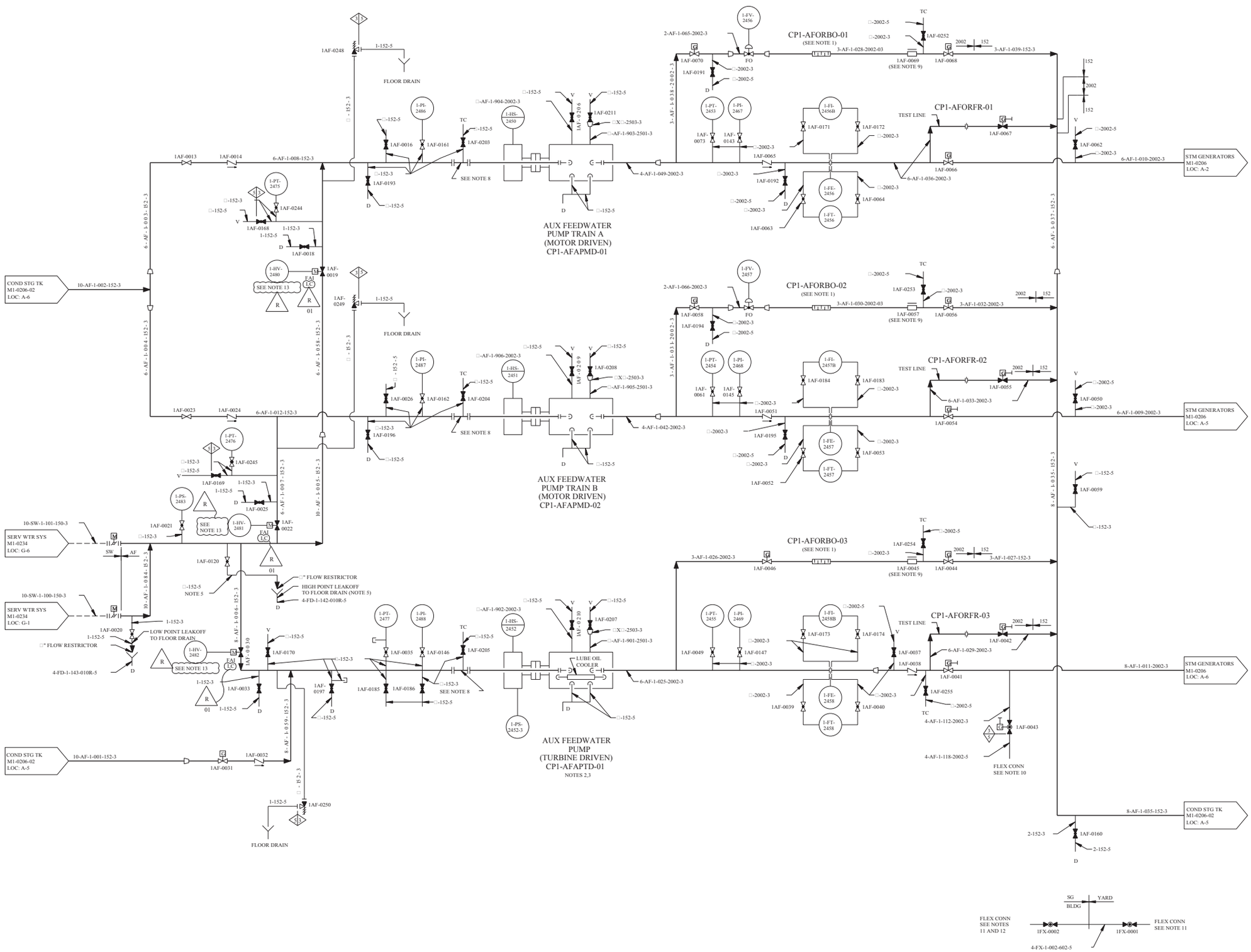

REV	DWN	CHKD	APVD	REMARKS
CP-19	GAW 05-06 2015	MHF 05-06 2015		THIS DRAWING REVISED TO INCORPORATE DESIGN CHANGE FDA 2010-000172-82-01 PER SK-0007-10-000172-82-01.

NOTES:

1. BREAKDOWN ORIFICE TO BE SUPPLIED BY PUMP MANUFACTURER.
2. TURBINE-DRIVEN AUXILIARY FEEDWATER PUMP LUBRICATING OIL COOLER TO BE SUPPLIED BY PUMP MANUFACTURER.
3. AUXILIARY FEEDWATER PUMP TURBINE DRIVER STEAM SUPPLY SYSTEM SHOWN ON DRAWING M1-0202, LOC: D-6.
4. FOR MECHANICAL SYMBOLS AND NOTES SEE DRAWING M1-0200.
5. HIGH POINT LEAKOFF CONNECTION FOR DETERMINATION OF SERVICE WATER IN-LEAKAGE.
6. CAPS WILL NOT BE PROVIDED ON VENT AND DRAIN LINES UNLESS OTHERWISE NOTED.
7. CLASS BREAK (CLASS 3 TO CLASS 5) IS DOWNSTREAM OF ALL VENT, DRAIN AND LEAK OFF VALVES.
8. TEMPORARY STRAINERS CP1-AFSRTS-01,02,03 ARE REQUIRED FOR SYSTEM FLUSHING. THE TEMPORARY STRAINERS CAN BE RE-INSTALLED FOR POST MAINTENANCE ACTIVITY.
9. REMOVE CHECK VALVE INTERNALS FROM VALVES 1AF-0045 , 1AF-0057 , AND 1AF-0069 AND ABANDON BODIES IN PLACE PER DCN 6538 REV 0.
10. AFW SECONDARY CONNECTION INSTALLED WITH HOSE FOLLOWING A BEYOND DESIGN BASIS EXTERNAL EVENT.
11. FLEX CONNECTION - MAY BE A PIPE CAP OR STORZ FITTING.
12. AFW SECONDARY CONNECTION INSTALLED WITH HOSE FOLLOWING A BEYOND DESIGN BASIS EXTERNAL EVENT. FOR NORMAL OPERATION SEE NOTE 10.
13. VALVE CLOSED AND DE-ENERGIZED (ONLY REQUIRED IN MODES 1 THROUGH 4), REF FDA-2010-000172-82.

R 01 R

FSAR FIGURE 10.4-11

THIS DRAWING CREATED ELECTRONICALLY

CLASS I
(NUCLEAR SAFETY-RELATED)
SAFETY CLASS 1 SEISMIC CATEGORY I
SAFETY CLASS 2 CLASS 1E
SAFETY CLASS 3 ASSOCIATED CIRCUITS

LUMINANT
CPNPP
GLEN ROSE, TEXAS

FLOW DIAGRAM
AUXILIARY FEEDWATER SYSTEM
PUMP TRAINS

DWG. NO. M1-0206 | SH. NO. 01 | REV. CP-19

< FINAL PRINT >

me970000.dgn A M1-0206-01

REV	DWN	CHKD	APVD	REMARKS
CP-22	CWG 11-26-2014	MHF 11-26-2014		THIS DRAWING REVISED TO INCORPORATE DESIGN CHANGE FDA 2013-000008-13-00 PER SK-0005-13-000008-13-00.

NOTES:

1. CONDENSATE STORAGE TANK IS SEISMIC CATEGORY 1 STRUCTURE AND NUCLEAR SAFETY CLASS 3.
2. FOR MECHANICAL SYMBOLS AND NOTES SEE DRAWING M1-0200.
3. CARBON STEEL WELD NECK FLANGE TO HAVE 150 LB RF RATING TO MATCH STAINLESS STEEL FLANGE ON VALVE.
4. TANK PENETRATIONS SUPPLIED BY OTHERS.
5. CAPS WILL NOT BE PROVIDED ON VENT AND DRAIN LINES UNLESS OTHERWISE NOTED.
6. UNLESS OTHERWISE NOTED, DRAINS COLLECTED BY LOCAL DRAIN SYSTEM UNDER ADMINISTRATIVE CONTROL.
7. CP1-AFORFR-12 HAS BEEN REPLACED WITH A PADDLE BLIND
8. VALVE 1AF-0198 IS USED BY CHEMISTRY FOR EVACUATION FROM UNDER THE BLADDER AND INJECTION OF NITROGEN AS REQUIRED.
9. NITROGEN SUPPLY TO CONSIST OF LOW PRESSURE DEWARS CANISTERS.
10. FLEX CONNECTION - MAY BE A PIPE CAP OR STORZ FITTING.

R

FSAR FIGURE 10.4-11

THIS DRAWING CREATED ELECTRONICALLY

CLASS I
(NUCLEAR SAFETY-RELATED)
SAFETY CLASS 1 — SEISMIC CATEGORY I
SAFETY CLASS 2 — CLASS 1E
SAFETY CLASS 3 — ASSOCIATED CIRCUITS

LUMINANT
CPNPP
GLEN ROSE, TEXAS

FLOW DIAGRAM
AUXILIARY FEEDWATER SYSTEM
YARD LAYOUT

DWG. NO.	SH. NO.	REV.
M1-0206	02	CP-22

< FINAL PRINT >

$$$$$$$$DATE$$$$$$$$ CIKD REF 9/17/2001

me997900.dgn A M1-0206-02

REV	DWN	CHK	APVD	REMARKS
CP-15	DK K 09-29-2014	MM 10-01-2014		THIS DRAWING REVISED TO INCORPORATE DESIGN CHANGE FDA 2013-000008-02-00 PER SK-0001-13-000008-02-00.

NOTES:

1. FOR MECHANICAL SYMBOLS AND NOTES SEE DWG M1-0200.
2. DELETED
3. ADDED TO FACILITATE TESTING OF BORG/WARNER CHECK VALVES.
4. REMOVE CHECK VALVES INTERNALS, ABANDON VALVE BODIES 2AF-0327 AND 2AF-0328 IN PLACE.

TABLE

CONTROL VALVE	SAFETY CLASS 3 AIR ACCUMULATOR
2-HV-2461	CP2-CIATAF-01 CP2-CIATAF-11
2-PV-2454A	CP2-CIATAF-02 CP2-CIATAF-16
2-PV-2454B AND 2-FV-2457	CP2-CIATAF-03 CP2-CIATAF-15
2-HV-2462	CP2-CIATAF-04 CP2-CIATAF-12
2-HV-2460	CP2-CIATAF-05 CP2-CIATAF-09
2-HV-2459	CP2-CIATAF-06 CP2-CIATAF-10
2-PV-2453A	CP2-CIATAF-07 CP2-CIATAF-14
2-PV-2453B AND 2-FV-2456	CP2-CIATAF-08 CP2-CIATAF-13

FSAR FIGURE 10.4-11

THIS DRAWING CREATED ELECTRONICALLY

DRAWING 2323-M2-0206 REV CP-6
HAS BEEN SPLIT INTO THE FOLLOWING SHEETS:
M2-0206
M2-0206-01
M2-0206-02

CLASS I

(NUCLEAR SAFETY-RELATED)

SAFETY CLASS 1	SEISMIC CATEGORY I
SAFETY CLASS 2	CLASS 1E
SAFETY CLASS 3	ASSOCIATED CIRCUITS

LUMINANT
CPNPP
GLEN ROSE, TEXAS

FLOW DIAGRAM
AUXILIARY FEEDWATER
SYSTEM

DWG. NO.	SH. NO.	REV.
M2-0206	-	CP-15

$$$$$$$DATE$$$$$$

REF CKD 1 27/98 CP-E

me459000.dgn A M2-0206 B C D E F G < FINAL PRINT > H

REV	DWN	CHK	APVD	REMARKS
CP-14	DLK 03-25-2015	JKG 03-25-2015		THIS DRAWING REVISED TO INCORPORATE DESIGN CHANGE FDA 2013-000008-02-00 PER SK-0002-13-000008-02-00

NOTES:

1. BREAKDOWN ORIFICE TO BE SUPPLIED BY PUMP MANUFACTURER.
2. TURBINE-DRIVEN AUXILIARY FEEDWATER PUMP LUBRICATING OIL COOLER TO BE SUPPLIED BY PUMP MANUFACTURER.
3. AUXILIARY FEEDWATER PUMP TURBINE DRIVEN STEAM SUPPLY SYSTEM SHOWN ON DRAWING M2-0202.
4. FOR MECHANICAL SYMBOLS AND NOTES SEE DWG M1-0200.
5. HIGH-POINT LEAKOFF CONNECTION FOR DETERMINATION OF SERVICE WATER IN-LEAKAGE.
6. TEMPORARY STRAINERS CP2-AFSRTS-01 . CP2-AFSRTS-02 CP2-AFSRTS-03 ARE REQUIRED FOR SYSTEM FLUSHING. THE TEMPORARY STRAINERS CAN BE RE-INSTALLED FOR POST MAINTENANCE ACTIVITY.
7. VALVE INTERNALS REMOVED.
8. AUXILIARY FEEDWATER PUMP TURBINE LUBE OIL EQUALIZING LINE DRAIN VALVE (2AF-0326) IS LOCATED BELOW THE GOVERNOR VALVE ON THE NORTHWEST CORNER OF THE PUMP SKID. REFER TO TERRY DRAWING 1024620 FOR THE OIL PIPING SCHEMATIC.
9. VALVE CLOSED AND DE-ENERGIZED (ONLY REQUIRED IN MODES 1 THROUGH 4), REF FDA-2010-000172-82.
10. FLEX CONNECTION - WITH PIPE CAP.
11. AFW SECONDARY CONNECTION INSTALLED WITH HOSE FOLLOWING A BEYOND DESIGN BASIS EXTERNAL EVENT. FOR NORMAL OPERATION SEE NOTE 9.
12. AFW SECONDARY CONNECTION INSTALLED WITH HOSE FOLLOWING A BEYOND DESIGN BASIS EXTERNAL EVENT.

R

FSAR FIGURE 10.4-11

THIS DRAWING CREATED ELECTRONICALLY

DRAWING 2323-M2-0206 REV CP-6
HAS BEEN SPLIT INTO THE FOLLOWING SHEETS:

M2-0206
M2-0206-01
M2-0206-02

CLASS I

LUMINANT
CPNPP
GLEN ROSE, TEXAS

FLOW DIAGRAM
AUXILIARY FEEDWATER SYSTEM
PUMP TRAINS

DWG. NO.	SH. NO.	REV.
M2-0206	01	CP-14

$$$$$$$DATES$$$$$$

me682900.dgn M2-0206-01 < FINAL PRINT >

REV	DWN	CHK'D	APVD	REMARKS
CP-12	DUK 10-08-2014	MM 10-10-2014		THIS DRAWING REVISED TO INCORPORATE DESIGN CHANGE FDA 2013-000008-16-00 PER SK-0001-13-000008-16-00.

NOTES:

1. CONDENSATE STORAGE TANK IS SEISMIC CATEGORY 1 STRUCTURE NUCLEAR SAFETY CLASS 3.
2. FOR MECHANICAL SYMBOLS AND NOTES SEE DRAWING M1-0200.
3. CARBON STEEL WELD NECK FLANGE TO HAVE 150 LB RF RATING TO MATCH STAINLESS STEEL FLANGE ON VALVE.
4. TANK PENETRATIONS SUPPLIED BY OTHERS.
5. DELETED
6. 2CO-0196 LOCKED OPEN TO PREVENT OVER PRESSURIZATION OF 12-151G AUXILIARY FEEDWATER LINES.
7. CP2-AFORFR-12 HAS BEEN REPLACED WITH A PADDLE BLIND
8. VALVE 2AF-0198 IS USED BY CHEMISTRY FOR EVACUATION FROM UNDER THE BLADDER AND INJECTION OF NITROGEN AS REQUIRED.
9. NITROGEN SUPPLY TO CONSIST OF LOW PRESSURE DEWARS CANISTERS.
10. FLEX CONNECTION - MAY BE A PIPE CAP OR STORZ FITTING.

FSAR FIGURE 10.4-11

THIS DRAWING CREATED ELECTRONICALLY

DRAWING 2323-M2-0206 REV CP-6
HAS BEEN SPLIT INTO THE FOLLOWING SHEETS:

M2-0206
M2-0206-01
M2-0206-02

CLASS I
(NUCLEAR SAFETY-RELATED)
SAFETY CLASS 1 SEISMIC CATEGORY I
SAFETY CLASS 2 CLASS 1E
SAFETY CLASS 3 ASSOCIATED CIRCUITS

LUMINANT
CPNPP
GLEN ROSE, TEXAS

FLOW DIAGRAM
AUXILIARY FEEDWATER SYSTEM
YARD LAYOUT

DWG. NO. M2-0206 | SH. NO. 02 | REV. CP-12

CPE | A | B | C | D | E | F | G | H

me998000.dgn A M2-0206-02 | < FINAL PRINT >

SSSSSSSDATESSSSSS CHKD REF 9/17/2001

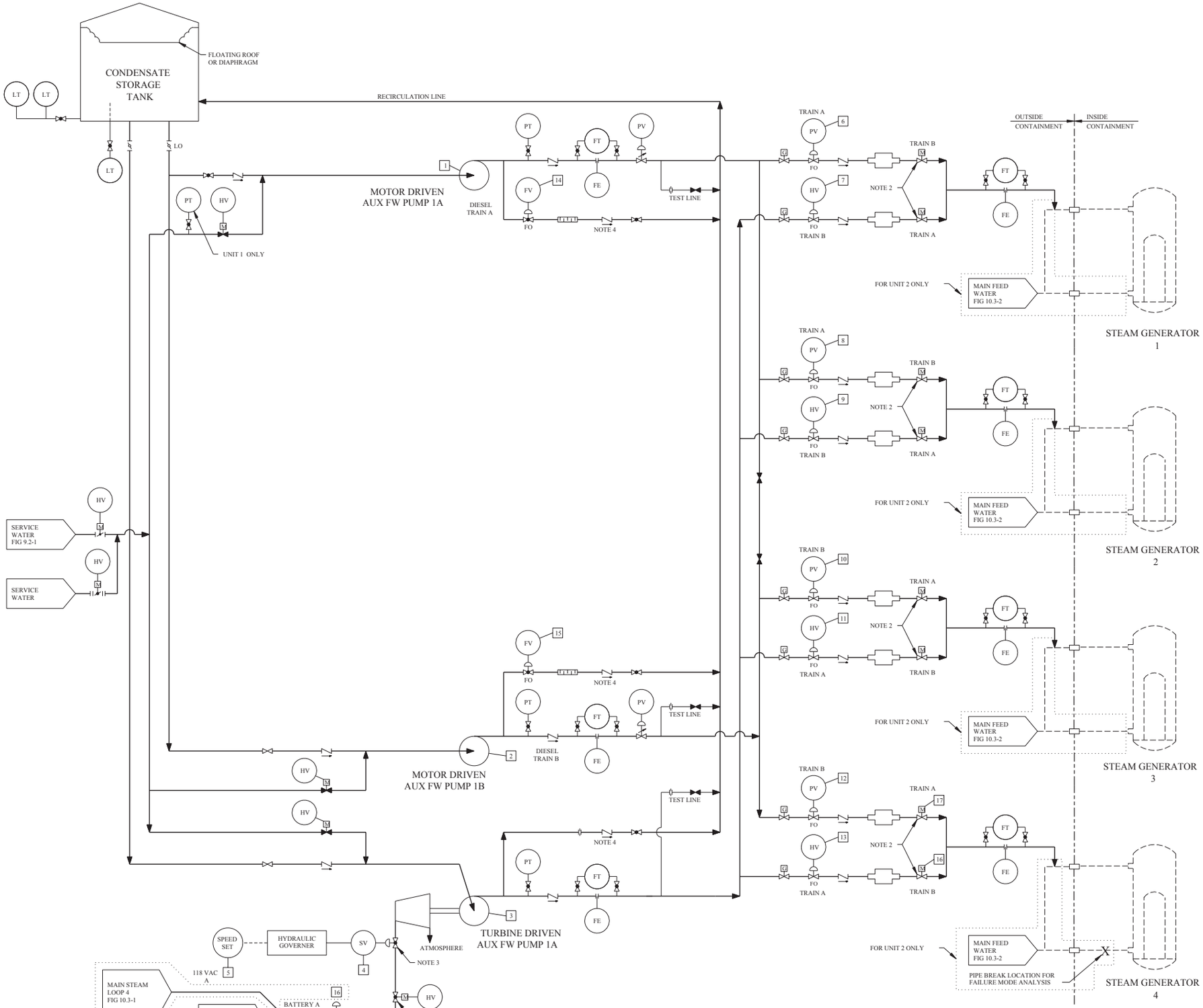

NOTES

1. NUMBERS IN ARH ITEM NUMBERS REFERENCED IN FAILURE MODE ANALYSIS.
2. NO - BLOCK VALVE UNDER ADMINISTRATIVE CONTROL (KEY SWITCH).
3. VALVE SHOWN IS THE GOVERNOR VALVE.
4. VALVE INTERNALS REMOVED.
5. TRIP THROTTLE VALVE IS LATCHED OPEN. THE MOTOR IS ABANDONED.

Amendment 102

FIGURE GENERATED FOR FSAR ONLY
BASED ON DRAWING
M1-0206

COMANCHE PEAK S.E.S.
FINAL SAFETY ANALYSIS REPORT
UNITS 1 AND 2

AUXILIARY FEEDWATER
FAILURE MODE ANALYSIS
FLOW DIAGRAM

FIGURE 10.4-12

FSAR10412.DGN

REV	DWN	CHK'D	APV'D	REMARKS
CP-20	JMC 11-16-2006	DJL 11-17-2006		THIS DRAWING REVISED TO INCORPORATE DESIGN CHANGE FDA 2004-003813-01-00 PER SK-0003-04-003813-01-00.

NOTES:

1. 1/2 " PIPING USED FOR RADIOACTIVE TRACER SAMPLE AND INJECTION LINES IN THE CONDENSER NECK SHALL BE SCH XXS.
2. THE EXTRACTION STEAM SYSTEM IS NON-NUCLEAR SAFETY CLASS.
3. ALL INSTRUMENTATION, DRAINS AND TEST CONNECTION VALVES ARE 3/4 " UNLESS OTHERWISE NOTED.
4. FEEDWATER HEATER SHELL SIDE RELIEF VALVES (IDENTIFIED BY *) TO BE SUPPLIED BY STRUTHERS WELLS CORP.
5. RADIOACTIVE TRACER INJECTION POINTS (INDICATED AS I.P.) AND SAMPLING POINTS (INDICATED AS S.P.) WILL BE 3/4 " C.S. EXCEPT FOR PIPING AND VALVES AT CONDENSER NECK WILL BE 1/2 " S.S.
6. SYSTEM ORIFICES ARE PLUG RESISTANT.
7. FEEDWATER HEATER EXTRACTION STEAM INLET NOZZLES ARE FITTED WITH PRESSURE TEST AND TEST WELL CONNECTIONS. ALL CONNECTIONS NOT USED WILL BE CAPPED AS INDICATED.
8. FEEDWATER HEATER CUSTOMER PIPE CONNECTIONS, AS SUPPLIED BY STRUTHERS WELLS CORP. ARE INDICATED BY ⬡.
9. CUSTOMER'S TB-PIPE CONNECTIONS, AS SUPPLIED BY ACPSI, ARE INDICATED BY □.
10. FOR MECHANICAL SYMBOLS AND NOTES SEE DRAWING M1-0200.
11. CUSTOMER'S CONDENSER PIPE CONNECTIONS AS SUPPLIED BY WESTINGHOUSE, ARE INDICATED BY ○.
12. □ REPRESENTS DRAIN CONNECTIONS SHOWN ON F.D. M1-0237-01.
13. DELETED
14. UNLESS OTHERWISE NOTED, ALL DRAINS COLLECTED BY LOCAL DRAIN SYSTEM.
15. VALVE MAY BE PARTIALLY OPEN.

FSAR FIGURE 10.4-13

THIS DRAWING CREATED ELECTRONICALLY

DRAWING 2323-M1-0205 REV CP-5
HAS BEEN SPLIT INTO THE FOLLOWING SHEETS:
M1-0205
M1-0205 SH A

NON–SAFETY

LUMINANT
CPSES
GLEN ROSE, TEXAS

FLOW DIAGRAM
EXTRACTION STEAM SYSTEM

DWG. NO.	SH. NO.	REV.
M1-0205	-	CP-20

me839700.dgn A M1-0205 FINAL PRINT

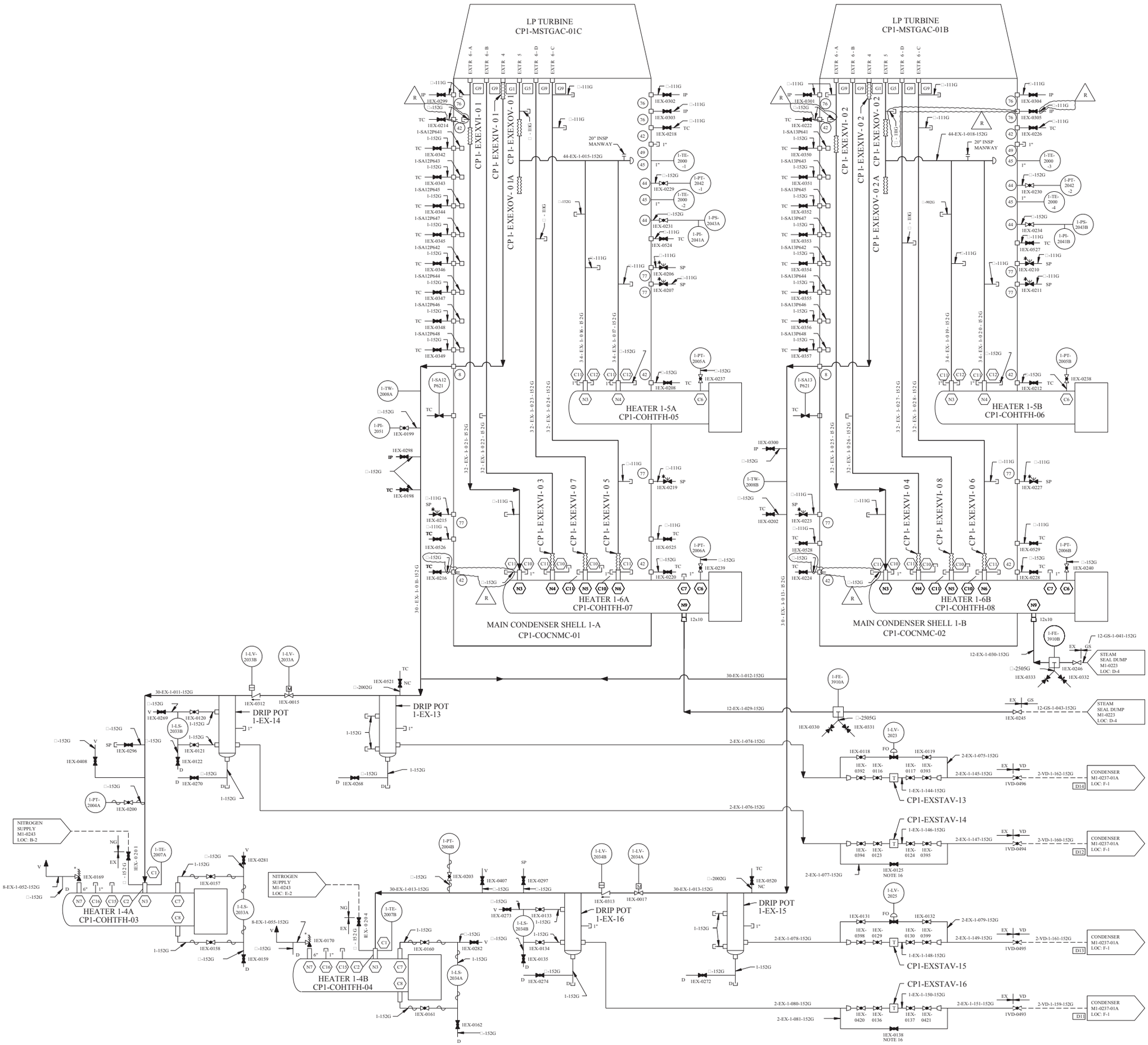
LP TURBINE
CP1-MSTGAC-01C
LP TURBINE
CP1-MSTGAC-01B
CP1-EXEXVI-01
CP1-EXEXIV-01
CP1-EXEXOV-01A
CP1-EXEXOV-01
CP1-EXEXVI-02
CP1-EXEXIV-02
CP1-EXEXOV-02A
CP1-EXEXOV-02
HEATER 1-5A
CP1-COHTFH-05
HEATER 1-5B
CP1-COHTFH-06
HEATER 1-6A
CP1-COHTFH-07
HEATER 1-6B
CP1-COHTFH-08
MAIN CONDENSER SHELL 1-A
CP1-COCNMC-01
MAIN CONDENSER SHELL 1-B
CP1-COCNMC-02
HEATER 1-4A
CP1-COHTFH-03
HEATER 1-4B
CP1-COHTFH-04
DRIP POT
1-EX-14
DRIP POT
1-EX-13
DRIP POT
1-EX-16
DRIP POT
1-EX-15
CP1-EXSTAV-13
CP1-EXSTAV-14
CP1-EXSTAV-15
CP1-EXSTAV-16
CONDENSER
M1-0237-01A
LOC: F-1
STEAM
SEAL DUMP
M1-0223
LOC: D-4
NITROGEN
SUPPLY
M1-0243
LOC: B-2
NITROGEN
SUPPLY
M1-0243
LOC: E-2
20" INSP
MANWAY
44-EX-1-015-152G
44-EX-1-018-152G
30-EX-1-011-152G
30-EX-1-012-152G
30-EX-1-013-152G
12-EX-1-030-152G
12-EX-1-029-152G
2-EX-1-074-152G
2-EX-1-076-152G
2-EX-1-077-152G
2-EX-1-078-152G
2-EX-1-079-152G
2-EX-1-080-152G
2-EX-1-081-152G
8-EX-1-052-152G
8-EX-1-055-152G
30-EX-1-010-152G
30-EX-1-013-152G
12-GS-1-041-152G
12-GS-1-043-152G
2-EX-1-075-152G
2-EX-1-145-152G
2-EX-1-146-152G
2-EX-1-147-152G
2-EX-1-148-152G
2-EX-1-149-152G
2-EX-1-150-152G
2-EX-1-151-152G
2-VD-1-162-152G
2-VD-1-161-152G
2-VD-1-160-152G
2-VD-1-159-152G
1-EX-1-144-152G
1-EX-1-146-152G
1-EX-1-148-152G
1-EX-1-150-152G
1-EX-0125
NOTE 16
1-EX-0138
NOTE 16
1-LV-2033B
1-LV-2033A
1-LV-2034B
1-LV-2034A
1-LV-2023
1-LV-2025
1-FE-3910B
1-FE-3910A
1-PT-2005A
1-PT-2005B
1-PT-2006A
1-PT-2006B
1-PT-2004B
1-PT-2004A
1-PT-2042 -1
1-PT-2042 -2
1-TE-2000 -1
1-TE-2000 -2
1-TE-2000 -3
1-TE-2000 -4
1-PS-2043A
1-PS-2043B
1-PI-2041A
1-PI-2041B
1-TW-2008A
1-TW-2008B
1-PI-2051
1-SA12 P621
1-SA13 P621
1-LS-2033A
1-LS-2034B
1-LS-2034A
1-TE-2007A
1-TE-2007B
1-SA12P641
1-SA12P643
1-SA12P645
1-SA12P647
1-SA12P642
1-SA12P644
1-SA12P646
1-SA12P648
1-SA13P641
1-SA13P643
1-SA13P645
1-SA13P647
1-SA13P642
1-SA13P644
1-SA13P646
1-SA13P648
1IEX-0299
1IEX-0214
1IEX-0342
1IEX-0343
1IEX-0344
1IEX-0345
1IEX-0346
1IEX-0347
1IEX-0348
1IEX-0349
1IEX-0302
1IEX-0303
1IEX-0218
1IEX-0229
1IEX-0231
1IEX-0524
1IEX-0206
1IEX-0207
1IEX-0208
1IEX-0237
1IEX-0219
1IEX-0526
1IEX-0216
1IEX-0525
1IEX-0239
1IEX-0220
1IEX-0301
1IEX-0222
1IEX-0350
1IEX-0351
1IEX-0352
1IEX-0353
1IEX-0354
1IEX-0355
1IEX-0356
1IEX-0357
1IEX-0304
1IEX-0305
1IEX-0226
1IEX-0230
1IEX-0234
1IEX-0527
1IEX-0210
1IEX-0211
1IEX-0238
1IEX-0212
1IEX-0227
1IEX-0529
1IEX-0240
1IEX-0228
1IEX-0224
1IEX-0528
1IEX-0223
1IEX-0202
1IEX-0300
1IEX-0246
1IEX-0333
1IEX-0332
1IEX-0330
1IEX-0331
1IEX-0245
1IEX-0312
1IEX-0015
1IEX-0521
1IEX-0269
1IEX-0120
1IEX-0121
1IEX-0122
1IEX-0270
1IEX-0268
1IEX-0296
1IEX-0408
1IEX-0200
1IEX-0169
1IEX-0157
1IEX-0158
1IEX-0159
1IEX-0281
1IEX-0170
1IEX-0160
1IEX-0161
1IEX-0282
1IEX-0162
1IEX-0203
1IEX-0407
1IEX-0297
1IEX-0273
1IEX-0133
1IEX-0134
1IEX-0135
1IEX-0274
1IEX-0313
1IEX-0017
1IEX-0520
1IEX-0272
1IEX-0118
1IEX-0119
1IEX-0392
1IEX-0116
1IEX-0117
1IEX-0393
1IEX-0394
1IEX-0123
1IEX-0124
1IEX-0395
1IEX-0131
1IEX-0132
1IEX-0398
1IEX-0129
1IEX-0130
1IEX-0399
1IEX-0420
1IEX-0136
1IEX-0137
1IEX-0421
1VD-0496
1VD-0494
1VD-0495
1VD-0493
1IEX-0199
1IEX-0198
1IEX-0215
1IEX-0526
1IEX-0216
1IEX-0220
1IEX-0239
1IEX-0525
1IEX-0219
1IEX-0237
1IEX-0208
1IEX-0207
1IEX-0206
1IEX-0524
1IEX-0231
1IEX-0229
1IEX-0342
1IEX-0343
1IEX-0344
1IEX-0345
1IEX-0346
1IEX-0347
1IEX-0348
1IEX-0349
1IEX-0302
1IEX-0303
1IEX-0218

REV	DWN	CHKD	APVD	REMARKS
CP-13	SM 11-19 2009	JRMC 11-19 2009		THIS DRAWING REVISED TO INCORPORATE DESIGN CHANGE FDA 2004-003813-01-00 PER SK-0001-04-003813-01-00.

NOTES:

1. FEEDWATER HEATER SHELL SIDE RELIEF VALVES (IDENTIFIED BY *) TO BE SUPPLIED BY STRUTHERS WELLS CORP.
2. SYSTEM ORIFICES ARE PLUG RESISTANT.
3. FEEDWATER HEATER EXTRACTION STEAM INLET NOZZLES ARE FITTED WITH PRESSURE TEST AND TEST WELL CONNECTIONS. ALL CONNECTIONS NOT USED WILL BE CAPPED AS INDICATED.
4. FEEDWATER HEATER CUSTOMER PIPE CONNECTIONS, AS SUPPLIED BY STRUTHERS WELLS ARE INDICATED BY .
5. CUSTOMER'S TB-PIPE CONNECTIONS, AS SUPPLIED BY ACPSI, ARE INDICATED BY
6. FOR MECHANICAL SYMBOLS AND NOTES SEE DRAWING M1-0200.
7. REPRESENTS DRAIN CONNECTIONS SHOWN ON M2-0237-01.
8. UNLESS OTHERWISE NOTED, ALL DRAINS COLLECTED BY LOCAL DRAIN SYSTEM.
9. VALVE MAY BE PARTIALLY OPEN.

DRAWING 2323-M2-0205 REV CP-4
HAS BEEN SPLIT INTO THE FOLLOWING SHEETS:
M2-0205
M2-0205 SH A

FSAR FIGURE 10.4-13

THIS DRAWING CREATED ELECTRONICALLY

NON–SAFETY

LUMINANT
CPNPP
GLEN ROSE, TEXAS

FLOW DIAGRAM
EXTRACTION STEAM SYSTEM

DWG. NO.	SH. NO.	REV.
M2-0205	-	CP-13

$$$$$$$$DATE$$$$$$$$

me962700.dgn A M2-0205 < FINAL PRINT >

REV	DWN	CHKD	APVD	REMARKS
CP-14	SM 10-13-2012	KM 10-13-2012		THIS DRAWING REVISED TO INCORPORATE DESIGN CHANGE FDA 2012-000114-01-01 PER SK-0002-12-000114-01-01.

NOTES:

1. FEEDWATER HEATER SHELL SIDE RELIEF VALVES (IDENTIFIED BY *) TO BE SUPPLIED BY STRUTHERS WELLS CORP.
2. SYSTEM ORIFICES ARE PLUG RESISTANT.
3. FEEDWATER HEATER EXTRACTION STEAM INLET NOZZLES ARE FITTED WITH PRESSURE TEST AND TEST WELL CONNECTIONS. ALL CONNECTIONS NOT USED WILL BE CAPPED AS INDICATED.
4. FEEDWATER HEATER CUSTOMER PIPE CONNECTIONS, AS SUPPLIED BY STRUTHERS WELLS CORP. ARE INDICATED BY ⬡.
5. CUSTOMER'S TB-PIPE CONNECTIONS, AS SUPPLIED BY ACPSI, ARE INDICATED BY □.
6. FOR MECHANICAL SYMBOLS AND NOTES SEE DRAWING M1-0200.
7. CUSTOMER'S CONDENSER PIPE CONNECTIONS AS SUPPLIED BY WESTINGHOUSE, ARE INDICATED BY ○.
8. □ REPRESENTS DRAIN CONNECTIONS SHOWN ON M2-0237-01.
9. UNLESS OTHERWISE NOTED, ALL DRAINS COLLECTED BY LOCAL DRAIN SYSTEM.
10. VALVE MAY BE PARTIALLY OPEN.

FSAR FIGURE 10.4-13

THIS DRAWING CREATED ELECTRONICALLY

DRAWING 2323-M2-0205 REV CP-4
HAS BEEN SPLIT INTO THE FOLLOWING SHEETS:
M2-0205
M2-0205-A

NON-SAFETY

LUMINANT
CPNPP
GLEN ROSE, TEXAS

FLOW DIAGRAM
EXTRACTION STEAM SYSTEM

DWG. NO. M2-0205 | SH. NO. A | REV. CP-14

< FINAL PRINT >

SSSSSSSDATESSSSSS

me101840.dgn

M2-0205-A

REV	DWN	CHKD	APVD	REMARKS
CP-28	JESC 05-21-2014	DJL 05-21-2014		THIS DRAWING REVISED TO INCORPORATE DESIGN CHANGE FDA-2014-000131-01-00 PER SK-0001-14-000131-01-00.

NOTES:

1. * BY OTHERS.
2. HEATER CUSTOMER PIPE CONNECTIONS AS SUPPLIED BY STRUTHERS WELLS ARE INDICATED BY .
3. SAMPLING CONNECTIONS ARE FOR THE TURBINE HEAT RATE TEST.
4. FOR MECHANICAL SYMBOLS AND NOTES SEE DRAWING M1-0200.
5. ◯ REPRESENTS CONDENSER PENETRATION.
6. ALL I&C CHANNEL NUMBERS WILL HAVE PREFIX 1.E. 1-TE-2323 .
7. UNLESS OTHERWISE NOTED, ALL DRAINS TO BE COLLECTED BY LOCAL DRAIN SYSTEM TO TURBINE BUILDING SUMP.
8. SEAL WATER INJECTION EAST AND WEST FILTERS WILL BE ALIGNED PER PROCEDURE SOP-308B.
9. 1-PV-2609 AND 1-PV-2610 DO NOT FULLY CLOSE DUE TO MECHANICAL STOP TO MAINTAIN MINIMUM FLOW (REF FDA-2014-000131-01).

R

FSAR FIGURE 10.4-14

THIS DRAWING CREATED ELECTRONICALLY

DRAWING M1-0207 REV CP-21
HAS BEEN SPLIT INTO THE FOLLOWING SHEETS:
M1-0207
M1-0207-B

DRAWING 2323-M1-0207 REV CP-5
HAS BEEN SPLIT INTO THE FOLLOWING SHEETS:
M1-0207
M1-0207-A

NON-SAFETY

LUMINANT
CPNPP
GLEN ROSE, TEXAS

FLOW DIAGRAM
HEATER DRAINS SYSTEM

DWG. NO. M1-0207 | SH. NO. - | REV. CP-28

< FINAL PRINT >

me104350.dgn A M1-0207 B C D E F G H

$$$$$$$$DATE$$$$$$$$

REV	DWN	CHK	APVD	REMARKS
CP-14	DLK 09-17 2012	MM 09-18 2012		THIS DRAWING REVISED TO INCORPORATE DESIGN CHANGE FDA 2012-000087-02-00 PER SK-0001-12-000087-02-00.

NOTES:

1. * BY OTHERS.
2. HEATER CUSTOMER PIPE CONNECTIONS AS SUPPLIED BY STRUTHERS WELLS ARE INDICATED BY ⬡
3. SAMPLING CONNECTIONS ARE FOR THE TURBINE HEAT RATE TEST.
4. FOR MECHANICAL SYMBOLS AND NOTES SEE DRAWING M1-0200.
5. ◯ REPRESENTS CONDENSER PENETRATION.
6. UNLESS OTHERWISE NOTED, ALL DRAINS TO BE COLLECTED BY LOCAL DRAIN SYSTEM TO TURBINE BUILDING SUMP.

FSAR FIGURE 10.4-14

THIS DRAWING CREATED ELECTRONICALLY

DRAWING 2323-M1-0207 REV CP-5
HAS BEEN SPLIT INTO THE FOLLOWING SHEETS:
M1-0207
M1-0207-A

NON–SAFETY

LUMINANT
CPNPP
GLEN ROSE, TEXAS

FLOW DIAGRAM
HEATER DRAINS SYSTEM

DWG. NO.	SH. NO.	REV.
M1-0207	A	CP-14

SSSSSSSDATESSSSSS

REV	DWN	CHKD	APVD	REMARKS
CP-6	DLK 03-18-2010	MM 03-18-2010		THIS DRAWING REVISED TO INCORPORATE DESIGN CHANGE FDA 2010-000027-01-00 PER SK-0003-10-000027-01-00.

NOTES:

1. HEATER CUSTOMER PIPE CONNECTIONS AS SUPPLIED BY STRUTHERS WELLS ARE INDICATED BY .
2. SAMPLING CONNECTIONS ARE FOR THE TURBINE HEAT RATE TEST.
3. FOR MECHANICAL SYMBOLS AND NOTES SEE DRAWING M1-0200.
4. ALL I&C CHANNEL NUMBERS WILL HAVE PREFIX. I.E. 1-TE-2323 .
5. UNLESS OTHERWISE NOTED, ALL DRAINS TO BE COLLECTED BY LOCAL DRAIN SYSTEM TO TURBINE BUILDING SUMP.

FSAR FIGURE 10.4-14

THIS DRAWING CREATED ELECTRONICALLY

DRAWING M1-0207 REV CP-21
HAS BEEN SPLIT INTO THE FOLLOWING SHEETS:

M1-0207
M1-0207-B

CLASS II

LUMINANT
CPNPP
GLEN ROSE, TEXAS

FLOW DIAGRAM
HEATER DRAINS SYSTEM

DWG. NO.	SH. NO.	REV.
M1-0207	B	CP-6

me970900.dgn A M1-0207-B B C D E F G FINAL PRINT H

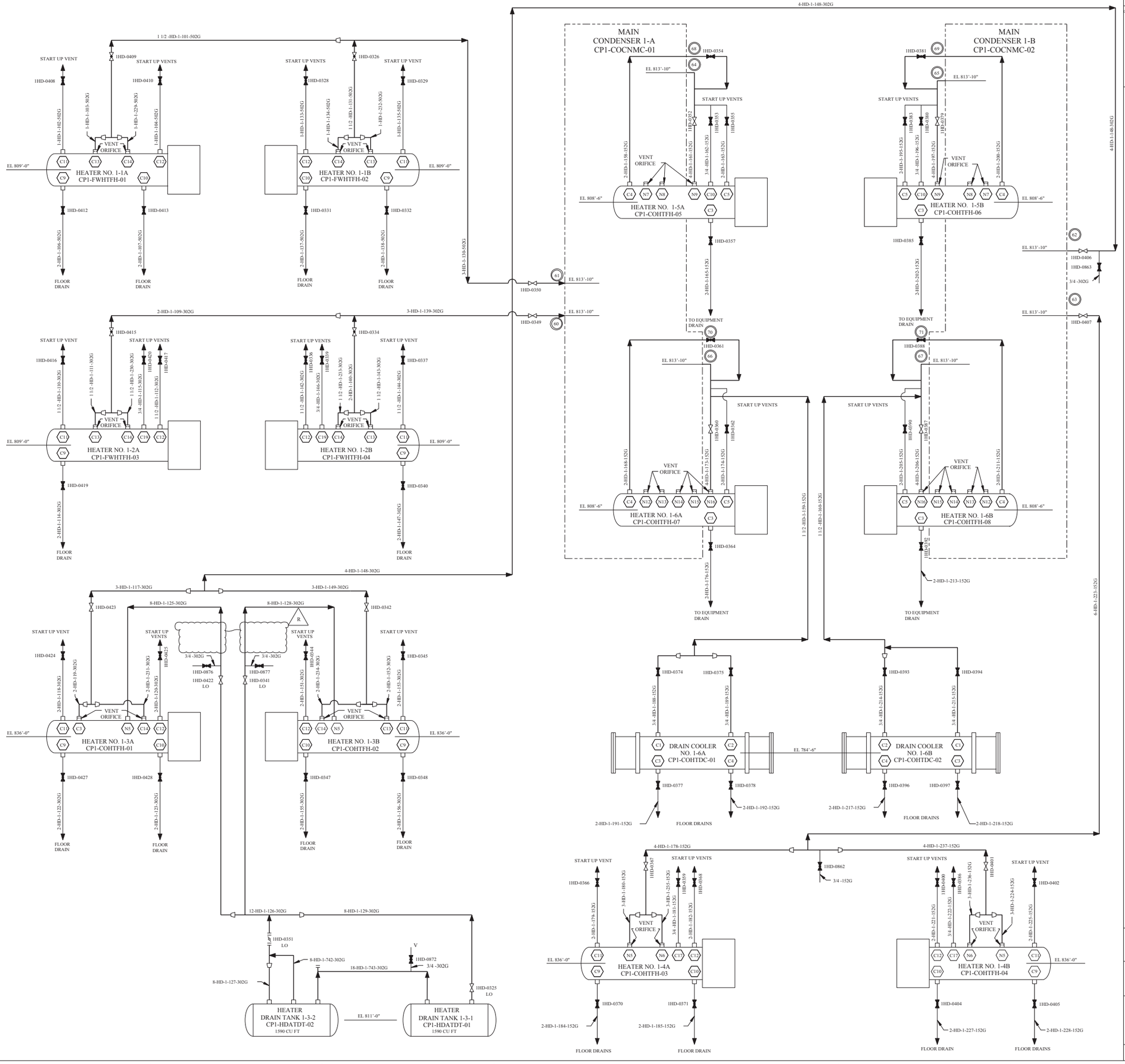

REV	DWN	CHKD	APVD	REMARKS
CP-13	DLK 03-19-2008	MM 03-20-2008		THIS DRAWING REVISED TO INCORPORATE DESIGN CHANGE FDA 2006-003080-12-00 PER SK-0018-06-003080-12-00

NOTES:

1. FOR NOZZLE CONNECTION SYMBOLS REFER TO THE STRUTHERS WELLS DRAWINGS.

HEATER NO.	1-1A & 1-1B:	1-74-06-32419D1
HEATER NO.	1-2A & 1-2B:	1-74-06-32420D1
HEATER NO.	1-3A & 1-3B:	1-74-06-32421D1
HEATER NO.	1-4A & 1-4B:	1-74-06-32422D1
HEATER NO.	1-5A & 1-5B:	1-74-06-32423D1
HEATER NO.	1-6A & 1-6B:	1-74-06-324124D1
HEATER NO.	1-6A & 1-6B:	DRAIN COOLERS: 3-74-06-324125D1

2. DELETED R

REFERENCES:

FOR GENERAL NOTES & SYMBOLS SEE DRAWING M1-0200.

REPRESENTS PENETRATION TO CONDENSER.

FSAR FIGURE 10.4-14

THIS DRAWING CREATED ELECTRONICALLY

NON–SAFETY

LUMINANT
CPNPP
GLEN ROSE, TEXAS

FLOW DIAGRAM
HEATER DRAINS SYSTEM

DWG. NO.	SH. NO.	REV.
M1-0208	-	CP-13

$$$$$$$DATE$$$$$$

me901900.dgn A M1-0208 < FINAL PRINT >

REV	DWN	CHKD	APVD	REMARKS
CP-33	GLK 04-02-2009	MHF 04-02-2009		THIS DRAWING REVISED TO INCORPORATE DESIGN CHANGE FDA-2009-000992-01-00 PER SK-0001-09-000992-01-00. EDITORIAL CHANGE AS NOTED.

NOTES:

1. ALL DRAINS ENTERING DRAIN TANKS ENTER AT THE TOP OF THE TANK.
2. DRAIN TANKS DESIGNED TO ASME BOILER AND PRESSURE VESSEL CODE SECTION VIII, DIVISION 1.
3. FOR MECHANICAL SYMBOLS AND NOTES SEE DRAWING M1-0200.
4. * BY ACPSI.
5. NOZZLE TO NOZZLE CONNECTION.
6. DELETED
7. ◯ REPRESENTS MSR AND DRAIN TANKS PENETRATION PER SOUTHWESTERN ENGINEERING DRAWING DM-94191.
8. EACH REHEATER DRAIN TANK DRAIN INLET NOZZLE IS PROVIDED WITH ONE 1" SIZE PIPE COUPLING FOR A-CPSI SUPPLIED MSR HEMI-HEAD LEVEL TRANSMITTER.
9. UNLESS OTHERWISE NOTED ALL DRAINS COLLECTED BY LOCAL DRAIN SYSTEM.

MOISTURE SEPARATOR REHEATER 1-B
CP1-MSTGAC-01E

SEPARATOR DRAIN TANK 1-B
CP1-HDATMS-01
156 CU FT

SHELL DRAIN TANK 1-B
CP1-HDATSD-01
100 CU FT

REHEATER DRAIN TANK 1-B1
CP1-HDATRD-01
180 CU FT

REHEATER DRAIN TANK 1-B2
CP1-HDATRD-04

CP1-HDORRD-02

WARM-UP ORIFICE
CP1-HDORFR-06

HP TURBINE EXHAUST M1-0202-01A LOC: G-6

CONDENSER 1-B M1-0207-A LOC: G-3

HEATER DRAIN TANK 1-3-1 M1-0207-B LOC: A-4

CONDENSER 1-A M1-0207-A LOC: A-3

HEATER 1-1B M1-0207 LOC: G-1

12-HD-1-923-1302G 4TH PASS DRAIN LINE

4-HD-1-924-1302G 4TH PASS VENT LINE

FSAR FIGURE 10.4-14

THIS DRAWING CREATED ELECTRONICALLY

DRAWING 2323-M1-0209 REV CP-2
HAS BEEN SPLIT INTO THE FOLLOWING SHEETS:
M1-0209
M1-0209-A

NON–SAFETY

LUMINANT
CPNPP
GLEN ROSE, TEXAS

FLOW DIAGRAM
HEATER DRAINS SYSTEM

DWG. NO. M1-0209 | SH. NO. - | REV. CP-33

REF CK'D 03/07/02 CP-31

$$$$$$$DATE$$$$$$

me927600.dgn A M1-0209

REV	DWN	CHKD	APVD	REMARKS
CP-26	DLK 04-02-2009	MEH 04-02-2009		THIS DRAWING REVISED TO INCORPORATE DESIGN CHANGE FDA 2009-000992-01-00 PER SK-0002-09-000992-01-00.

NOTES:

1. ALL DRAINS ENTERING DRAIN TANKS ENTER AT THE TOP OF THE TANK.
2. DRAIN TANKS DESIGNED TO ASME BOILER AND PRESSURE VESSEL CODE SECTION VIII, DIVISION 1.
3. FOR MECHANICAL SYMBOLS AND NOTES SEE DRAWING M1-0200.
4. * BY UPC.
5. NOZZLE TO NOZZLE CONNECTION.
6. DELETED
7. REPRESENTS MSR AND DRAIN TANKS PENETRATION PER SOUTHWESTERN ENGINEERING DRAWING NUMBER DM-94191.
8. EACH REHEATER DRAIN TANK DRAIN INLET NOZZLE IS PROVIDED WITH ONE 1" SIZE PIPE COUPLING FOR A-CPSI SUPPLIED MSR HEMI-HEAD LEVEL TRANSMITTER.
9. UNLESS OTHERWISE NOTED ALL DRAINS COLLECTED BY LOCAL DRAIN SYSTEM.

FSAR FIGURE 10.4-14

THIS DRAWING CREATED ELECTRONICALLY

DRAWING 2323-M1-0209 REV CP-2
HAS BEEN SPLIT INTO THE FOLLOWING SHEETS:
M1-0209
M1-0209-A

NON–SAFETY

LUMINANT
CPNPP
GLEN ROSE, TEXAS

FLOW DIAGRAM
HEATER DRAINS SYSTEM

DWG. NO.	SH. NO.	REV.
M1-0209	A	CP-26

me927500.dgn A M1-0209-A

REF CKD 03/07/02 CP-25

SSSSSSSDATESSSSSS

REV	DWN	CHK	APVD	REMARKS
CP-19	JRMC 05-21 2014	DJL 05-21 2014		THIS DRAWING REVISED TO INCORPORATE DESIGN CHANGE FDA-2014-000131-01-00 PER SK-0003-14-000131-01-00.

NOTES:

1. * BY OTHERS.
2. HEATER CUSTOMER PIPE CONNECTIONS AS SUPPLIED BY STRUTHERS WELLS ARE INDICATED BY .
3. SAMPLING CONNECTIONS ARE FOR THE TURBINE HEAT RATE TEST.
4. FOR MECHANICAL SYMBOLS AND NOTES SEE DRAWING M1-0200.
5. SEAL WATER INJECTION EAST AND WEST FILTERS WILL BE ALIGNED PER PROCEDURE SOP-305B.
6. 2-PV-2609 AND 2-PV-2610 DO NOT FULLY CLOSE DUE TO MECHANICAL STOP TO MAINTAIN MINIMUM FLOW (REF FDA-2014-000131-01).

R

FSAR FIGURE 10.4-14

THIS DRAWING CREATED ELECTRONICALLY

DRAWING M2-0207 REV CP-13
HAS BEEN SPLIT INTO THE FOLLOWING SHEETS:
M2-0207
M2-0207-B

DRAWING 2323-M2-0207 REV CP-2
HAS BEEN SPLIT INTO THE FOLLOWING SHEETS:
M2-0207
M2-0207-A

NON-SAFETY

LUMINANT
CPNPP
GLEN ROSE, TEXAS

FLOW DIAGRAM
HEATER DRAINS SYSTEM

DWG. NO. M2-0207 | SH. NO. - | REV. CP-19

$$$$$$$DATE$$$$$$$ REF CHK 12/05/97 CP-B

me101960.dgn A M2-0207 B C D E F G < FINAL PRINT > H

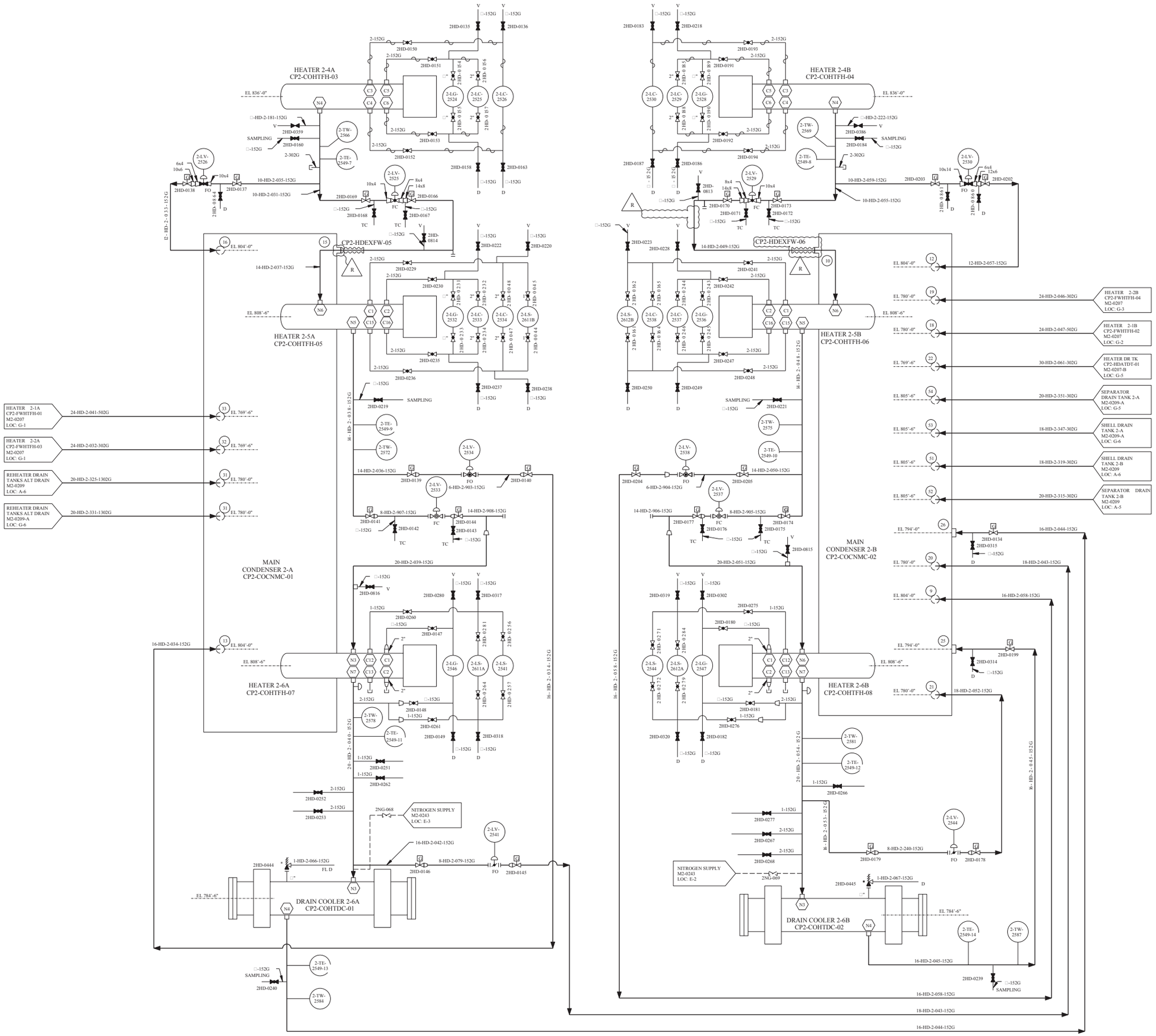

REV	DWN	CHKD	APVD	REMARKS
CP-13	DLK 07-16 2012	MM 07-16 2012		THIS DRAWING REVISED TO INCORPORATE DESIGN CHANGE FDA 2012-000087-01-00 PER SK-0003-12-000087-01-00.

NOTES:

1. * BY OTHERS.
2. HEATER CUSTOMER PIPE CONNECTIONS AS SUPPLIED BY STRUTHERS WELLS ARE INDICATED BY
3. SAMPLING CONNECTIONS ARE FOR THE TURBINE HEAT RATE TEST.
4. FOR MECHANICAL SYMBOLS AND NOTES SEE DRAWING M1-0200.
5. REPRESENTS CONDENSER PENETRATION.

FSAR FIGURE 10.4-14

THIS DRAWING CREATED ELECTRONICALLY

DRAWING 2323-M2-0207 REV CP-2
HAS BEEN SPLIT INTO THE FOLLOWING SHEETS:
M2-0207
M2-0207-A

NON-SAFETY

LUMINANT
CPNPP
GLEN ROSE, TEXAS

FLOW DIAGRAM
HEATER DRAINS SYSTEM

DWG. NO. M2-0207 | SH. NO. A | REV. CP-13

me958800.dgn M2-0207-A

< FINAL PRINT >

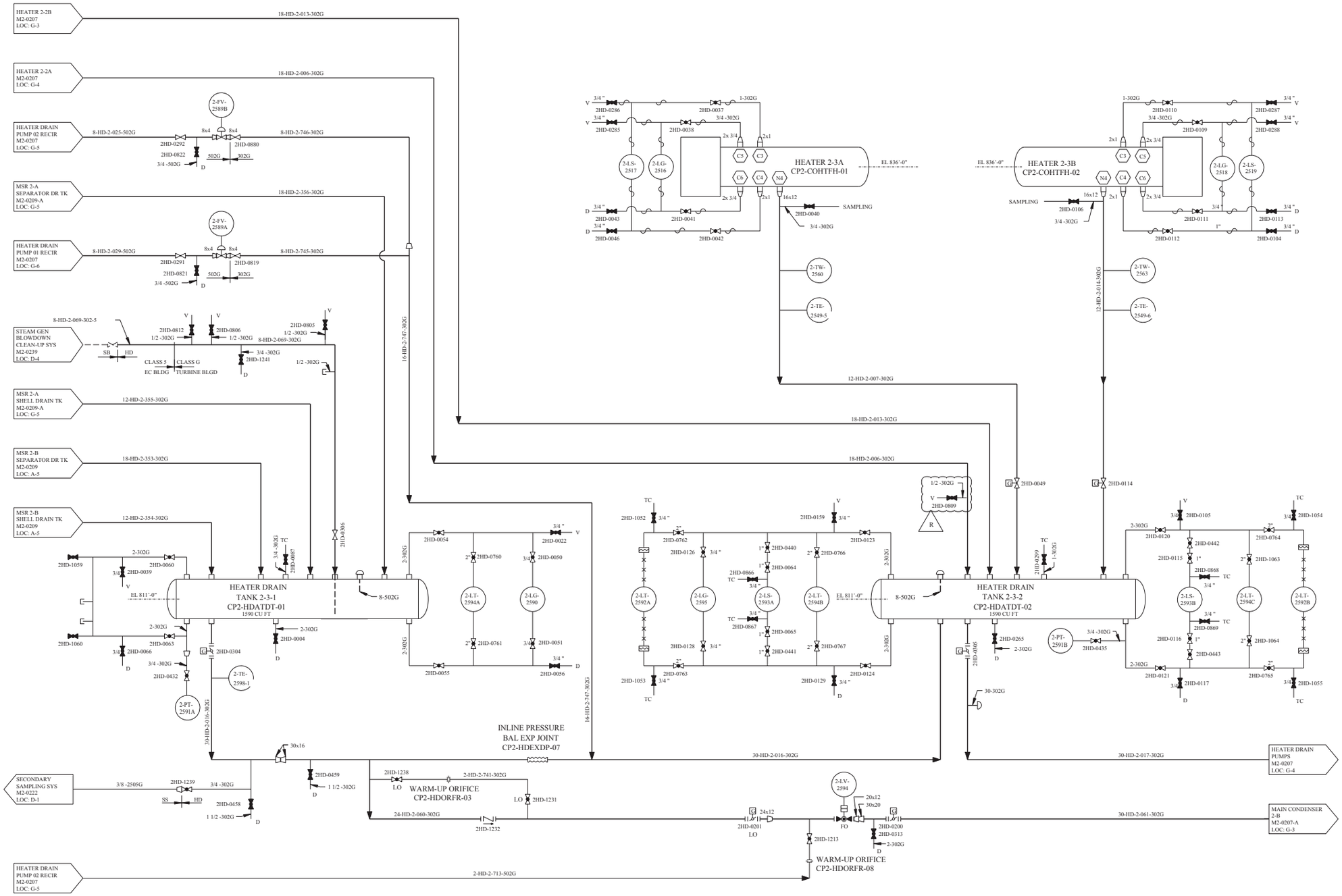

REV	DWN	CHK	APVD	REMARKS
CP-3	DLK 11-01-2011	MM 11-01-2011		THIS DRAWING REVISED TO INCORPORATE DESIGN CHANGE FDA 2011-000205-01-00 PER SK-0001-11-000205-01-00.

NOTES:

1. HEATER CUSTOMER PIPE CONNECTIONS AS SUPPLIED BY STRUTHERS WELLS ARE INDICATED BY ⬡
2. SAMPLING CONNECTIONS ARE FOR THE TURBINE HEAT RATE TEST.
3. FOR MECHANICAL SYMBOLS AND NOTES SEE DRAWING M1-0200.
4. ALL I&C CHANNEL NUMBERS WILL HAVE PREFIX. I.E. 2-TE-2323
5. UNLESS OTHERWISE NOTED, ALL DRAINS TO BE COLLECTED BY LOCAL DRAIN SYSTEM TO TURBINE BUILDING SUMP.

FSAR FIGURE 10.4-14

THIS DRAWING CREATED ELECTRONICALLY

DRAWING M2-0207 REV CP-13
HAS BEEN SPLIT INTO THE FOLLOWING SHEETS:
M2-0207
M2-0207-B

CLASS II

LUMINANT
CPNPP
GLEN ROSE, TEXAS

FLOW DIAGRAM
HEATER DRAINS SYSTEM

DWG. NO. M2-0207 | SH. NO. B | REV. CP-3

FINAL PRINT

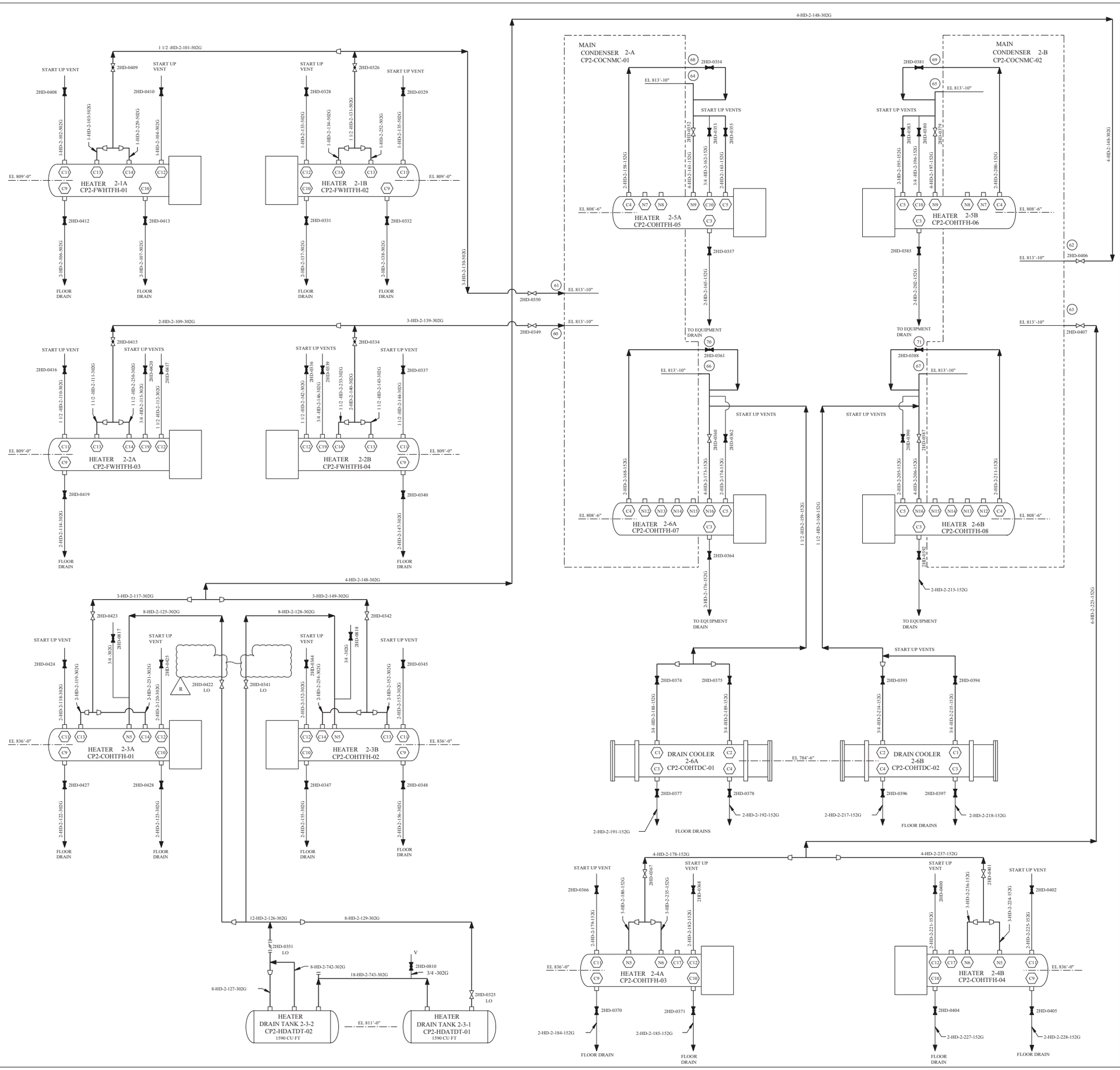
4-HID-2-148-302G
1 1/2 -HID-2-101-502G
MAIN CONDENSER 2-A CP2-COCNMC-01
MAIN CONDENSER 2-B CP2-COCNMC-02
START UP VENT
START UP VENTS
EL 813'-10"
EL 809'-0"
EL 808'-6"
EL 784'-6"
EL 836'-0"
EL 811'-0"
HEATER 2-1A CP2-FWHTFH-01
HEATER 2-1B CP2-FWHTFH-02
HEATER 2-2A CP2-FWHTFH-03
HEATER 2-2B CP2-FWHTFH-04
HEATER 2-3A CP2-COHTFH-01
HEATER 2-3B CP2-COHTFH-02
HEATER 2-4A CP2-COHTFH-03
HEATER 2-4B CP2-COHTFH-04
HEATER 2-5A CP2-COHTFH-05
HEATER 2-5B CP2-COHTFH-06
HEATER 2-6A CP2-COHTFH-07
HEATER 2-6B CP2-COHTFH-08
DRAIN COOLER 2-6A CP2-COHTDC-01
DRAIN COOLER 2-6B CP2-COHTDC-02
HEATER DRAIN TANK 2-3-2 CP2-HDATDT-02 1590 CU FT
HEATER DRAIN TANK 2-3-1 CP2-HDATDT-01 1590 CU FT
TO EQUIPMENT DRAIN
FLOOR DRAIN
FLOOR DRAINS
2-HID-2-109-302G
3-HID-2-139-302G
3-HID-2-117-302G
3-HID-2-149-302G
8-HID-2-125-302G
8-HID-2-128-302G
12-HID-2-126-302G
8-HID-2-129-302G
4-HID-2-178-152G
4-HID-2-237-152G
6-HID-2-232-152G
1 1/2 -HID-2-159-152G
1 1/2 -HID-2-160-152G
2HD-0409
2HD-0408
2HD-0410
2HD-0326
2HD-0328
2HD-0329
2HD-0354
2HD-0381
2HD-0415
2HD-0416
2HD-0334
2HD-0337
2HD-0423
2HD-0342
2HD-0424
2HD-0345
2HD-0341 LO
2HD-0422 LO
2HD-0351 LO
2HD-0810
2HD-0325 LO
2HD-0350
2HD-0349
2HD-0357
2HD-0361
2HD-0364
2HD-0406
2HD-0407
2HD-0385
2HD-0388
2HD-0374
2HD-0375
2HD-0393
2HD-0394
2HD-0366
2HD-0367
2HD-0368
2HD-0400
2HD-0401
2HD-0402
2HD-0370
2HD-0371
2HD-0404
2HD-0405
2HD-0412
2HD-0413
2HD-0331
2HD-0332
2HD-0419
2HD-0340
2HD-0427
2HD-0428
2HD-0347
2HD-0348
2HD-0377
2HD-0378
2HD-0396
2HD-0397
2HD-0360
2HD-0362
2HD-0390
2HD-0392
2HD-0213-152G
2HD-0417
2HD-0418
2HD-0344
2HD-0383
2HD-0384
2HD-0379
2HD-0353
2HD-0355
2HD-0352
2HD-0363
2HD-0365
2HD-0387
2HD-0389
2HD-0391
2HD-0376
2HD-0395
2HD-0396
2HD-0398
2HD-0399
2HD-0403
2HD-0405
2HD-0407
2HD-0409
2HD-0411
2HD-0412
2HD-0414
2HD-0416
2HD-0418
2HD-0420
2HD-0422
2HD-0424
2HD-0426
2HD-0428
2HD-0430
2HD-0432
2HD-0434
2HD-0436
2HD-0438
2HD-0440
2HD-0442
2HD-0444
2HD-0446
2HD-0448
2HD-0450
2HD-0452
2HD-0454
2HD-0456
2HD-0458
2HD-0460
2HD-0462
2HD-0464
2HD-0466
2HD-0468
2HD-0470
2HD-0472
2HD-0474
2HD-0476
2HD-0478
2HD-0480
2HD-0482
2HD-0484
2HD-0486
2HD-0488
2HD-0490

REV	DWN	CHKD	APVD	REMARKS
CP-19	GLK 04-02-2009	MH 04-02-2009		THIS DRAWING REVISED TO INCORPORATE DESIGN CHANGE FDA-2009-000992-01-00 PER SK-0003-09-000992-01-00. EDITORIAL CHANGE AS NOTED.

NOTES:

1. ALL DRAINS ENTERING DRAIN TANKS ENTER AT THE TOP OF THE TANK.
2. DRAIN TANKS DESIGNED TO ASME BOILER AND PRESSURE VESSEL CODE SECTION VIII, DIVISION 1.
3. FOR MECHANICAL SYMBOLS AND NOTES SEE DRAWING M1-0200.
4. * BY ACPSI
5. NOZZLE TO NOZZLE CONNECTION.
6. ⬡ REPRESENTS MSR AND DRAIN TANKS PENETRATION PER SOUTHWESTERN ENGINEERING DRAWING DM-94191.
7. EACH REHEATER DRAIN TANK DRAIN INLET NOZZLE IS PROVIDED WITH ONE 1" SIZE PIPE COUPLING FOR A-CPSI SUPPLIED MSR HEMI-HEAD LEVEL TRANSMITTER.
8. DELETED

FSAR FIGURE 10.4-14

THIS DRAWING CREATED ELECTRONICALLY

DRAWING 2323-M2-0209 REV CP-1
HAS BEEN SPLIT INTO THE FOLLOWING SHEETS:

- M2-0209
- M2-0209-A

NON–SAFETY

LUMINANT
CPNPP
GLEN ROSE, TEXAS

FLOW DIAGRAM
HEATER DRAINS SYSTEM

DWG. NO. M2-0209 | SH. NO. - | REV. CP-19

REF CHK 12/597 CP-11

SSSSSSDATESSSSSS

me927400.dgn

REV	DWN	CHK	APVD	REMARKS
CP-18	GLK 04-02-2009	MHF 04-02-2009		THIS DRAWING REVISED TO INCORPORATE DESIGN CHANGE FDA-2009-000992-01-00 PER SK-00004-09-000992-01-00. EDITORIAL CHANGES AS NOTED.

NOTES:

1. ALL DRAINS ENTERING DRAIN TANKS ENTER AT THE TOP OF THE TANK.
2. DRAIN TANKS DESIGNED TO ASME BOILER AND PRESSURE VESSEL CODE SECTION VIII, DIVISION 1.
3. FOR MECHANICAL SYMBOLS AND NOTES SEE DRAWING M1-0200.
4. * BY ACPSI
5. NOZZLE TO NOZZLE CONNECTION.
6. R REPRESENTS MSR AND DRAIN TANKS PENETRATION PER SOUTHWESTERN ENGINEERING DRAWING NUMBER DM-94191.
7. EACH REHEATER DRAIN TANK DRAIN INLET NOZZLE IS PROVIDED WITH ONE 1" SIZE PIPE COUPLING FOR ACPSI SUPPLIED MSR HEMI-HEAD LEVEL TRANSMITTER.
8. DELETED

MOISTURE SEPARATOR REHEATER 2-A
CP2-MSTGAC-01D

REHEATER DRAIN TANK 2-A1
CP2-HDATRD-01
180 CU FT

REHEATER DRAIN TANK 2-A2
CP2-HDATRD-03

SHELL DRAIN TANK 2-A
CP2-HDATSD-01
100 CU FT

SEPARATOR DRAIN TANK 2-A
CP2-HDATMS-01
156 CU FT

CP2-HDORRD-01

WARM-UP ORIFICE
CP2-HDORFR-07

STEAM GENERATOR FEED PUMP TURBINE M2-0202-01B LOC: A-6

FROM HP TURBINE EXHAUST M2-0202-01A

CONDENSER 2-B M2-0207-A LOC: G-3

CONDENSER 2-A M2-0207-A LOC: A-3

HEATER DRAIN TANK 2-3-1 M2-0207-B LOC: A-2

HEATER DRAIN TANK 2-3-1 M2-0207-B LOC: A-3

HEATER 2-1A M2-0207 LOC: G-1

DRAWING 2323-M2-0209 REV CP-1
HAS BEEN SPLIT INTO THE FOLLOWING SHEETS:
M2-0209
M2-0209-A

NON–SAFETY

LUMINANT
CPNPP
GLEN ROSE, TEXAS

FLOW DIAGRAM
HEATER DRAINS SYSTEM

DWG. NO. M2-0209 | SH. NO. A | REV. CP-18

FSAR FIGURE 10.4-14

THIS DRAWING CREATED ELECTRONICALLY

REF CHK 12/5/97 CP-8

$$$$$$$DATE$$$$$$

me927700.dgn M2-0209-A

REV	DWN	CHK	APVD	REMARKS
CP-32	JRMC 04-14 2009	SM 04-14 2009		THIS DRAWING REVISED TO INCORPORATE DESIGN CHANGE FDA 2008-003429-01-00 PER SK-0001-08-003429-01-00.

NOTES:

1. DELETED
2. FOR MECHANICAL SYMBOLS AND NOTES SEE DWG M1-0200.
3. HEAT EXCHANGER SHELL RELIEF VALVE SUPPLIED BY MANUFACTURER.
4. DELETED
5. HEAT EXCHANGER TUBE SIDE RELIEF VALVE SUPPLIED BY CAM INDUSTRIES.
6. * DENOTES SUPPLIED BY EQUIPMENT MANUFACTURER.
7. UNLESS OTHERWISE NOTED ALL DRAINS COLLECTED BY LOCAL DRAIN SYSTEM.
8. DELETED
9. VALVE TAG NUMBERS: 1TW-0239 , 1TW-0240 , 1TW-0241 , 1TW-0242 , 1TW-0324 , 1TW-0325 , 1TW-0326 AND 1TW-0327 ARE PVC OR CPVC TRUE UNION BALL VALVES.
10. PERMANENTLY INSTALLED BLANK.

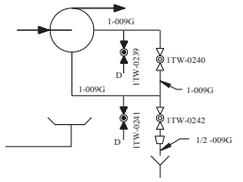

TURBINE PLANT COOLING WATER PUMP CP1-TWAPTP-02

SEAL LEAKOFF DETAIL

SEE NOTE 9

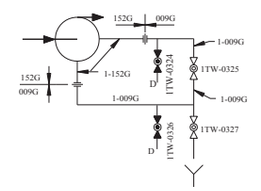

TURBINE PLANT COOLING WATER PUMP CP1-TWAPTP-01

SEAL LEAKOFF DETAIL

SEE NOTE 9

FSAR FIGURE 10.4-15

THIS DRAWING CREATED ELECTRONICALLY

DRAWING 2323-M1-0212 REV CP-7
HAS BEEN SPLIT INTO THE FOLLOWING SHEETS:
M1-0212
M1-0212-A
M1-0212-B

NON–SAFETY

LUMINANT
CPNPP
GLEN ROSE, TEXAS

FLOW DIAGRAM
TURBINE PLANT
COOLING WATER SYSTEM

DWG. NO.	SH. NO.	REV.
M1-0212	-	CP-32

FINAL PRINT

RIF CKD CP25 10/25/96

me105060.dgn

REV	DWN	CHKD	APVD	REMARKS
CP-28	DLK 09-21-2009	MM 09-21-2009		THIS DRAWING REVISED TO INCORPORATE DESIGN CHANGE FDA 2008-003429-01-00 PER SK-0002-08-003429-01-00.

NOTES:

1. FOR MECHANICAL SYMBOLS AND NOTES SEE DWG M1-0200.
2. UNLESS OTHERWISE NOTED ALL DRAINS COLLECTED BY LOCAL DRAIN SYSTEM.
3. PERMANENTLY INSTALLED BLANK.

FSAR FIGURE 10.4-15

THIS DRAWING CREATED ELECTRONICALLY

DRAWING 2323-M1-0212 REV CP-7
HAS BEEN SPLIT INTO THE FOLLOWING SHEETS:

- M1-0212
- M1-0212-A
- M1-0212-B

NON–SAFETY

LUMINANT
CPNPP
GLEN ROSE, TEXAS

FLOW DIAGRAM
TURBINE PLANT
COOLING WATER SYSTEM

DWG. NO. M1-0212 | SH. NO. A | REV. CP-28

FINAL PRINT

REF CKD CP-14 10/25/96

me105070.dgn A M1-0212-A B C D E F G H

CPE

REV	DWN	CHK	APVD	REMARKS
CP-37	DLK 10-13 2009	MM 10-06 2010		THIS DRAWING REVISED TO INCORPORATE DESIGN CHANGE FDA 2009-003957-01-00 PER SK-00002-09-003957-01-00.

NOTES:

1. COMMON DEVICES ARE PREFIXED WITH X.
2. FOR MECHANICAL SYMBOLS AND NOTES SEE DRAWING M1-0200.
3. VALVE 1TW-0048 HAS A REMOTE CHAIN OPERATOR ATTACHMENT
4. * DENOTES SUPPLIED BY EQUIPMENT MANUFACTURER.
5. UNLESS OTHERWISE NOTED ALL DRAINS COLLECTED BY LOCAL DRAIN SYSTEM.
6. VALVE OPEN WHEN COMPRESSOR IS ON. VALVE CLOSED WHEN COMPRESSOR IS OFF.
7. VALVE CLOSED WHEN UNIT 2 TPCW IS ALIGNED TO THE COMMON LOAD HEADER.
8. FILTER ISOLATION VALVES ARE ALIGNED PER OPERATIONS PROCEDURES MAINTAINING UNIT ISOLATION.
9. VALVES XTW-0042 AND XTW-0043 ARE LOCKED CLOSED TO ISOLATE THE ABANDONED IN PLACE ELECTRIC AUXILIARY BOILER.

R

FSAR FIGURE 10.4-15

THIS DRAWING CREATED ELECTRONICALLY

DRAWING 2323-M1-0212 REV CP-7
HAS BEEN SPLIT INTO THE FOLLOWING SHEETS:

- M1-0212
- M1-0212-A
- M1-0212-B

CLASS II

LUMINANT
CPNPP
GLEN ROSE, TEXAS

FLOW DIAGRAM
TURBINE PLANT
COOLING WATER SYSTEM

DWG. NO. M1-0212 | SH. NO. B | REV. CP-37

FINAL PRINT

REF CKD CP-21 2/25/98

me103100.dgn

M1-0212-B

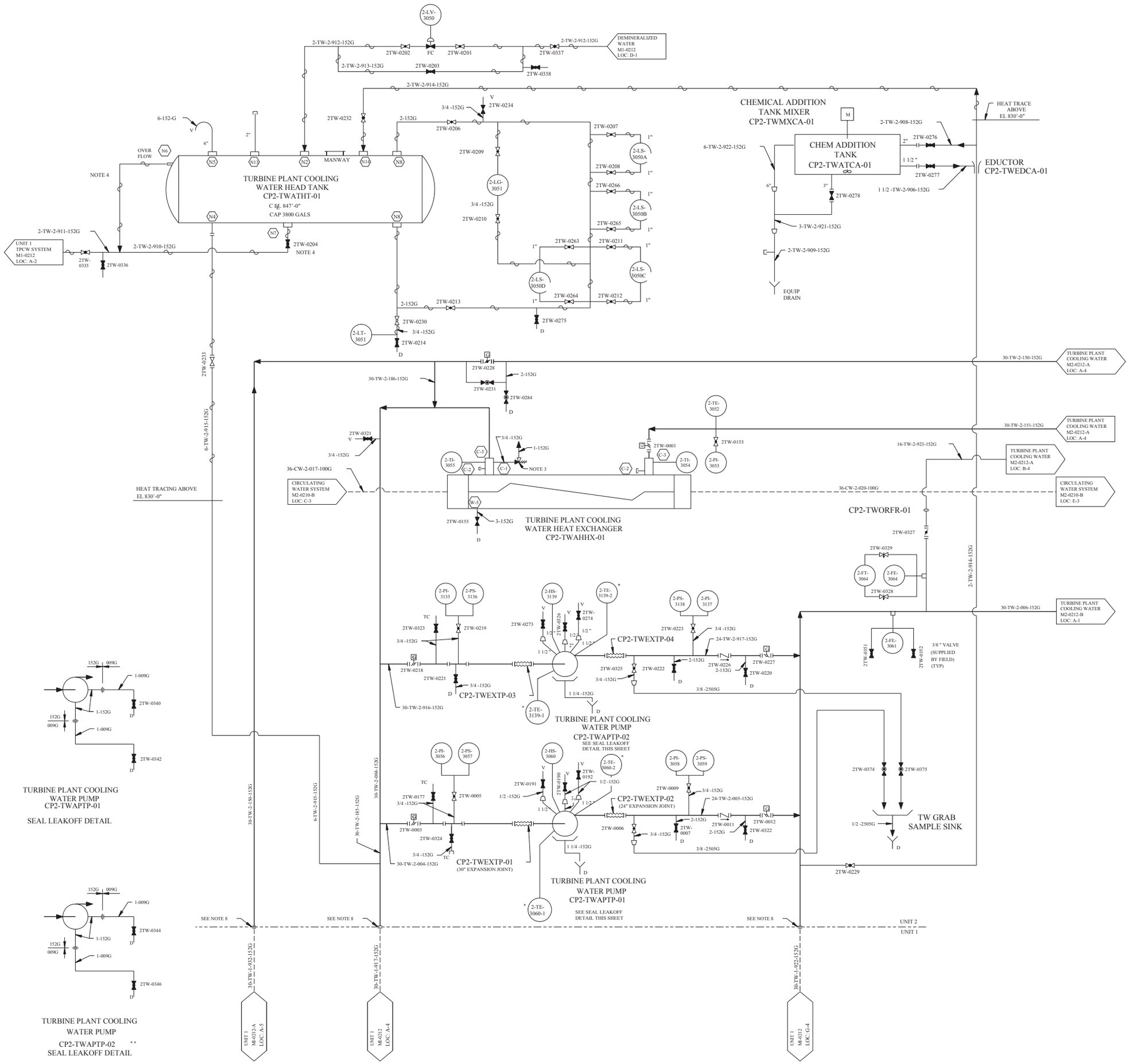

REV	DWN	CHK	APVD	REMARKS
CP-18	JHAC 09-11 2006	DJL 09-11 2006		THIS DRAWING REVISED TO INCORPORATE DESIGN CHANGE FDA-2004-000897-01-01 PER SK-0009-04-000897-01-01. EDITORIAL CHANGES AS NOTED.

NOTES:

1. DELETED
2. FOR MECHANICAL SYMBOLS AND NOTES SEE DWG M1-0200.
3. HEAT EXCHANGER SHELL RELIEF VALVE SUPPLIED BY MANUFACTURER.
4. HEAT TRACING IS NOT REQUIRED ON THE OVER FLOW LINE OR THE DRAIN LINE DOWN STREAM OF DRAIN VALVE 2TW-0204. MAINTENANCE MAY ABANDON IN PLACE.
5. DELETED
6. * DENOTES SUPPLIED BY EQUIPMENT MANUFACTURER.
7. DELETED
8. PERMANENTLY INSTALLED BLANK.

⬡ INDICATES NOZZLE CONNECTIONS PER VENDOR TANK DRAWING.

FSAR FIGURE 10.4-15

THIS DRAWING CREATED ELECTRONICALLY

DRAWING 2323-M2-0212 REV CP-4
HAS BEEN SPLIT INTO THE FOLLOWING SHEETS:

- M2-0212
- M2-0212-A
- M2-0212-B

NON–SAFETY

TXU POWER
CPSES
GLEN ROSE, TEXAS

FLOW DIAGRAM
TURBINE PLANT
COOLING WATER SYSTEM

DWG. NO. M2-0212 | SH. NO. - | REV. CP-18

REF CKD CP-13 11/24/97

me703600.dgn A M2-0212 B C D E F G FINAL PRINT H

REV	DWN	CHKD	APVD	REMARKS
CP-23	MM 05-16-2017	DLK 05-16-2017	MBF 05-17-2017	THIS DRAWING REVISED TO INCORPORATE EDITORIAL CHANGES PER AI-IR-2017-006461-1.

NOTES:

1. FOR MECHANICAL SYMBOLS AND NOTES SEE DRAWING M1-0200.
2. NO DISCHARGE PIPING REQUIRED (SUPPLIED BY ACPSI).
3. DELETED
4. * DENOTES SUPPLIED BY EQUIPMENT MANUFACTURER.

FSAR FIGURE 10.4-15

THIS DRAWING CREATED ELECTRONICALLY

DRAWING 2323-M2-0212 REV CP-4
HAS BEEN SPLIT INTO THE FOLLOWING SHEETS:
M2-0212
M2-0212-A
M2-0212-B

NON–SAFETY

LUMINANT
CPNPP
GLEN ROSE, TEXAS

FLOW DIAGRAM
TURBINE PLANT
COOLING WATER SYSTEM

DWG. NO.	SH. NO.	REV.
M2-0212	A	CP-23

FINAL PRINT

me961700.dgn A M2-0212-A

TURBINE PLANT COOLING WATER M2-0212-B LOC: A-5
TURBINE PLANT COOLING WATER M2-0212-B LOC: A-1
H_2 GAS DRYER THERMEK COOLER M2-0249-05 LOC: A-2
TURBINE PLANT COOLING WATER M2-0212 LOC: G-2
TURBINE PLANT COOLING WATER M2-0212 LOC: F-3
TURBINE PLANT COOLING WATER M2-0212 LOC: G-3
CONDENSATE POLISHING SYS M2-0244-B LOC: B-2
SECONDARY CORROSION MONITOR PANEL 2-AE-3850-4
ISO PHASE BUS COOLING UNIT CP2-EPIBHX-01
HEATER DRAIN PUMP 2-02 LUBE OIL COOLER PUMP: CP2-HDAPDP-02 REF: M2-0207 (BY BINGHAM WILLIAMETTE)
HEATER DRAIN PUMP 2-01 LUBE OIL COOLER PUMP: CP2-HDAPDP-01 REF: M2-0207 (BY BINGHAM WILLIAMETTE)
CONDENSATE PUMP MOTOR BEARING COOLER CP2-COCCCP-01 REF: M2-0204 (BY ELECTRIC MACHINERY)
CONDENSATE PUMP MOTOR BEARING COOLER CP2-COCCCP-02 REF: M2-0204 (BY ELECTRIC MACHINERY)
EXCITER AIR COOLER 2-01 2-SR16W501 (BY ACPSI)
EXCITER AIR COOLER 2-02 2-SR16W502 (BY ACPSI)
HYDROGEN COOLER 1 2-SP11W508
HYDROGEN COOLER 2 2-SP11W504
HYDROGEN COOLER 3 2-SP11W505
HYDROGEN COOLER 4 2-SP11W501
HYDROGEN COOLER 5 2-SP11W502
HYDROGEN COOLER 6 2-SP11W506
HYDROGEN COOLER 7 2-SP11W503
HYDROGEN COOLER 8 2-SP11W507
PRIMARY WATER COOLER REF: M2-0249-02A (BY ACPSI)
PRIMARY WATER LEAKAGE UNIT REF: M2-0249-02A LOC: D-4 (BY ACPSI)
GENERATOR SEAL OIL UNIT REF: M2-0249-04A (BY SIEMENS)

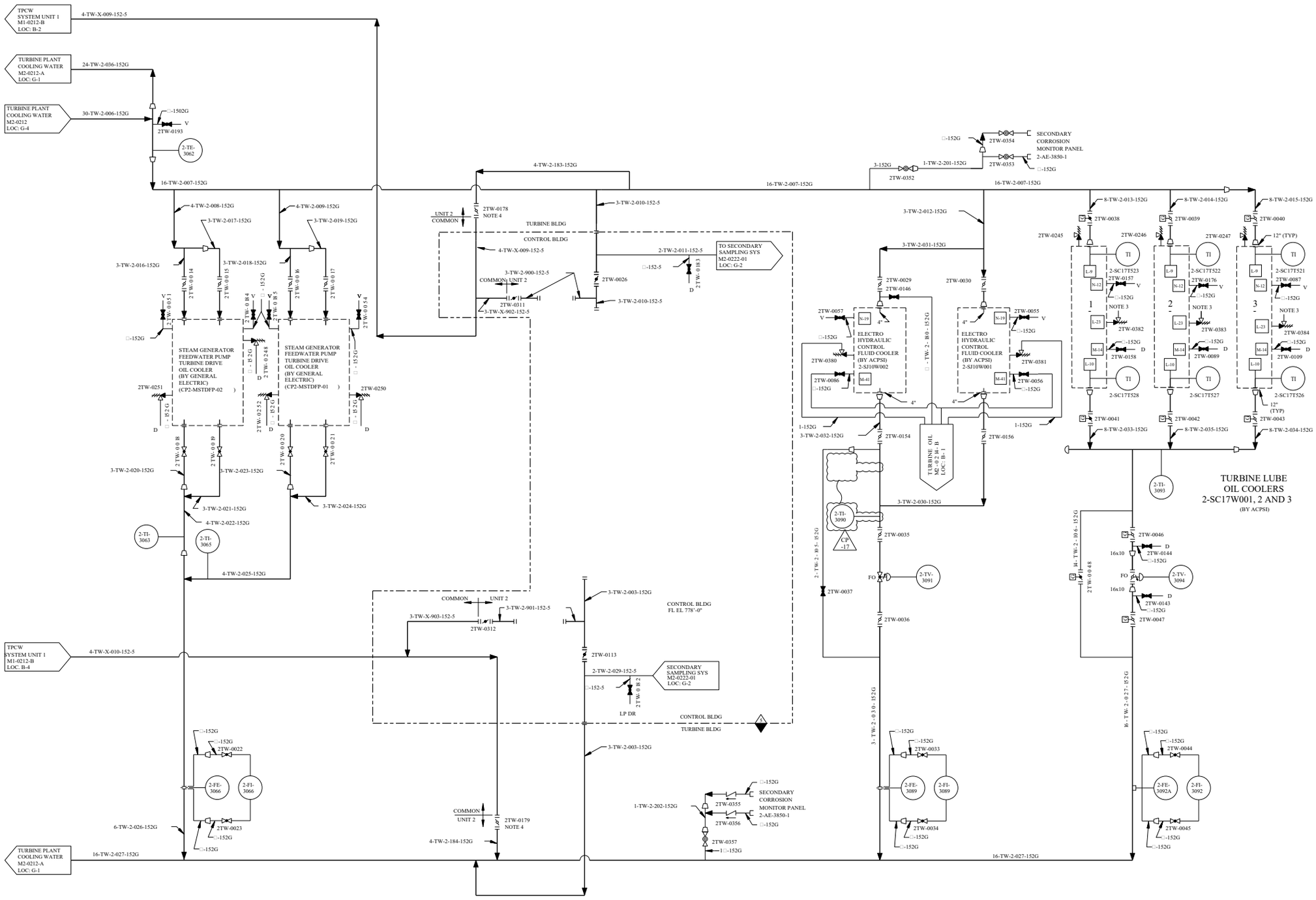

REV	DWN	CHKD	APVD	REMARKS
CP-17	DLK 08-09-2016	MM 08-09-2016	MHF 08-09-2016	THIS DRAWING REVISED TO INCORPORATE AI-CR-2016-007287-1 TO EDITORIALLY CORRECT THE LOCATION OF 2-TI-3090.

NOTES:

1. COMMON DEVICES ARE PREFIXED WITH X.
2. FOR MECHANICAL SYMBOLS AND NOTES SEE DRAWING M1-0200.
3. NO DISCHARGE PIPING REQUIRED (SUPPLIED BY ACPSI).
4. VALVE CLOSED WHEN UNIT 1 TPCW IS ALIGNED TO THE COMMON LOAD HEADER.
5. * DENOTES SUPPLIED BY EQUIPMENT MANUFACTURER.
6. DELETED

FSAR FIGURE 10.4-15

THIS DRAWING CREATED ELECTRONICALLY

DRAWING 2323-M2-0212 REV CP-4
HAS BEEN SPLIT INTO THE FOLLOWING SHEETS:

M2-0212
M2-0212-A
M2-0212-B

CLASS II

LUMINANT
CPNPP
GLEN ROSE, TEXAS

FLOW DIAGRAM
TURBINE PLANT
COOLING WATER SYSTEM

DWG. NO.	SH. NO.	REV.
M2-0212	B	CP-17

REF CKD CP-11 3/13/98

me101890.dgn A M2-0212-B B C D E F G FINAL PRINT H

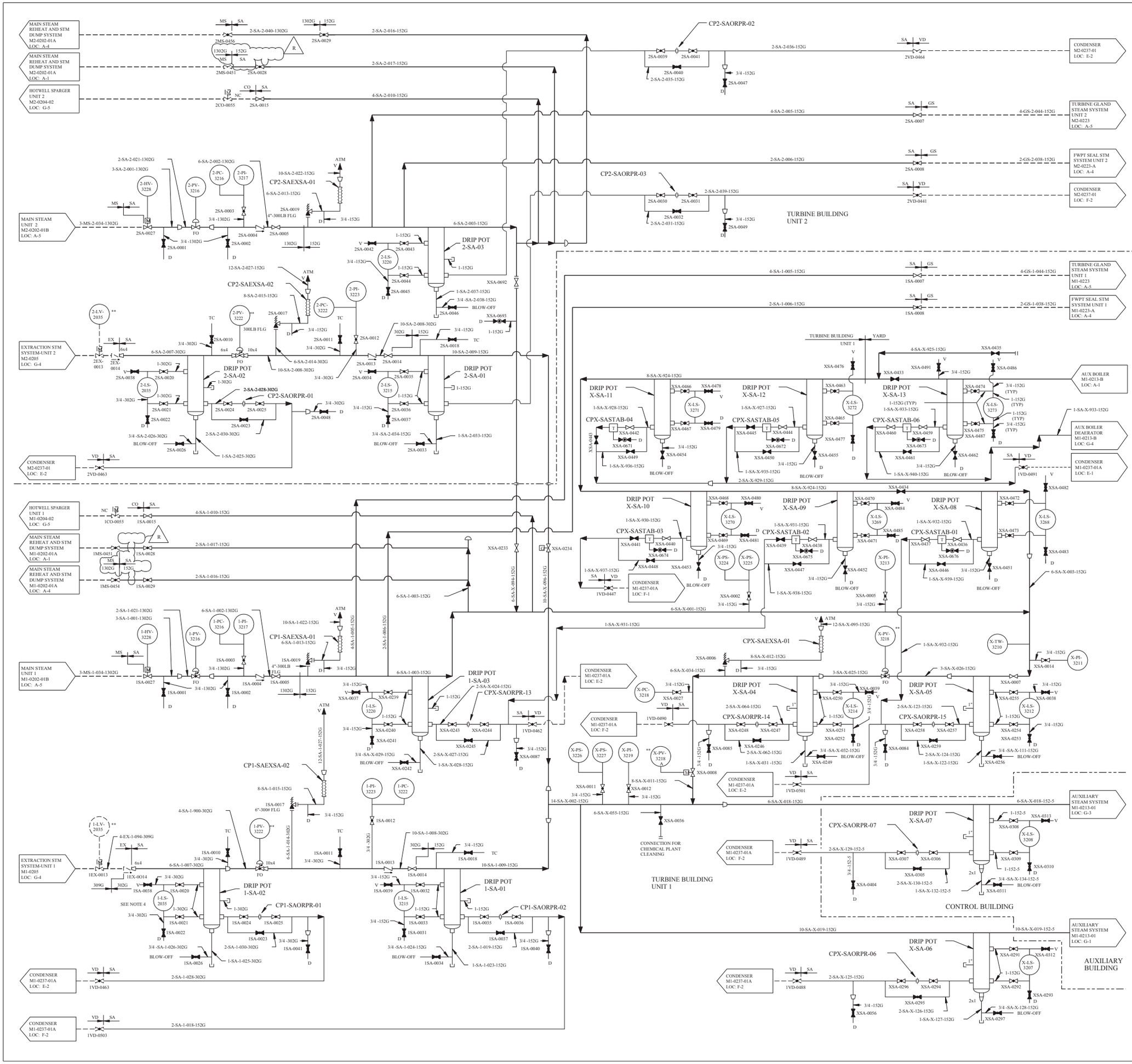

REV	DWN	CHKD	APVD	REMARKS
CP-23	MM 08-05 2005	DLK 08-08 2005		THIS DRAWING REVISED TO INCORPORATE DESIGN CHANGE FDA-2003-003096-01-00 PER SK-0001-03-003096-01-00.

NOTES:

1. ALL * MARKED PIPES AND VALVES IN CAM'S SCOPE TO BE SUPPLIED BY TU ELECTRIC.
2. FOR MECHANICAL SYMBOLS AND NOTES, SEE DRAWING M1-0200.
3. FOR AUTOMATIC CONTROL OF AUXILIARY BOILER SEE CAM DRAWING NUMBER C12033-4.
4. OPERATION LOGIC FOR 1-LS-2O35 SEE ICD M1-2205-05.
5. ALL INSTRUMENT ROOT VALVES SUPPLIED BY TU ELECTRIC ARE 3/4 " UNLESS OTHERWISE NOTED.
6. ALL PIPING AND TUBING (EXCEPT STEAM OUTLET ELBOW, LEVEL GAUGE PIPING AND PORTION OF BLOWDOWN LINE) IN CAMS SCOPE TO BE SUPPLIED BY TU ELECTRIC ALL VALVES TO BE SUPPLIED BY CAM.
7. DELETED
8. VENDOR SUPPLIED CHEMICAL FEED SYSTEM INCLUDES SUCTION PIPING.
9. FIELD TO INSTALL 1/4 -2505G TUBING BETWEEN BOTH THE BOILER CONNECTION AND STEAM OUTLET ROOT VALVE XSA-0098 AND THE CAM PANEL PER CAM DRAWING C12023-1.
10. FIELD TO INSTALL 3/8 -2505G TUBING BETWEEN THE HYDRAULIC CYLINDER AND THE HYDRAULIC POWER UNIT PER CAM DRAWING C12023-1.
11. THE CAM SUPPLIED CONDUCTIVITY CELL (BECKMAN TYPE CEL-VK-T 1" NPT FITTING) WILL BE INSTALLED IN A 2x2x2 THREADED TEE.
12. ** EQUIPMENT USED FOR MITIGATION OF HELB.

FSAR FIGURE 10.4-16

THIS DRAWING CREATED ELECTRONICALLY

DRAWING M1-0213 REV CP-6
HAS BEEN SPLIT INTO THE FOLLOWING SHEETS:
M1-0213
M1-0213-01
M1-0213-A
M1-0213-B
M1-0213-C

CLASS II

TXU POWER
CPSES
GLEN ROSE, TEXAS

FLOW DIAGRAM
AUXILIARY STEAM SYSTEM

DWG. NO.	SH. NO.	REV.
M1-0213	-	CP-23

REF CKD CP-20 10/26/96

me650200.dgn M1-0213

FINAL PRINT

REV	DWN	CHK	APVD	REMARKS
CP-11	JRMC 01-05-2012	DJL 01-05-2012		THIS DRAWING REVISED TO INCORPORATE DESIGN CHANGE FDA-2011-000018-01-00 PER SK-0001-11-000018-01-00.

NOTES:

1. ALL * MARKED PIPES AND VALVES IN CAM'S SCOPE SUPPLIED BY TU ELECTRIC.
2. FOR MECHANICAL SYMBOLS AND NOTES SEE DRAWING M1-0200.
3. FOR AUTOMATIC CONTROL OF AUXILIARY BOILER SEE CAM DRAWING NUMBER C12033-4.
4. OPERATION LOGIC FOR 1-LS-2035 SEE ICD M1-2205-05
5. ALL INSTRUMENT ROOT VALVES SUPPLIED BY TU ELECTRIC ARE 3/4 " UNLESS OTHERWISE NOTED.
6. ALL PIPING AND TUBING (EXCEPT STEAM OUTLET ELBOW, LEVEL GAUGE PIPING AND PORTION OF BLOWDOWN LINE) IN CAMS SCOPE SUPPLIED BY TU ELECTRIC. ALL VALVES SUPPLIED BY CAM.
7. DELETED
8. VENDOR SUPPLIED CHEMICAL FEED SYSTEM INCLUDES SUCTION PIPING.
9. 1/4 -2505G TUBING BETWEEN BOTH THE BOILER CONNECTION AND STEAM OUTLET ROOT VALVE XSA-0098 AND THE CAM PANEL PER CAM DRAWING C12023-1.
10. 3/8 -2505G TUBING BETWEEN THE HYDRAULIC CYLINDER AND THE HYDRAULIC POWER UNIT PER CAM DRAWING C12023-1.
11. THE CAM SUPPLIED CONDUCTIVITY CELL (BECKMAN TYPE CEL-VK-T 1" NPT FITTING) INSTALLED IN A 2X2X2 THREADED TEE.
12. DELETED
13. CHANGE TO NO (NORMALLY OPEN) FROM LO (LOCK OPEN) WHILE EQUIPMENT IS ABANDONED SO THAT XSA-0040 CAN BE REMOVED FROM THE REQUIREMENTS TO VERIFY LOCKED VALVE POSITION. IF CPX-SABOAB-01 IS EVER RETURNED TO SERVICE, XSA-0040 MUST BE RETURNED TO LO.

DRAWING M1-0213 REV CP-6
HAS BEEN SPLIT INTO THE FOLLOWING SHEETS:

M1-0213
M1-0213-01
M1-0213-A
M1-0213-B
M1-0213-C

FSAR FIGURE 10.4-16

THIS DRAWING CREATED ELECTRONICALLY

NON–SAFETY

LUMINANT
CPNPP
GLEN ROSE, TEXAS

FLOW DIAGRAM
AUXILIARY STEAM SYSTEM

DWG. NO.	SH. NO.	REV.
M1-0213	A	CP-11

FINAL PRINT

me105330.dgn M1-0213-A

REV	DWN	CHKD	APVD	REMARKS
CP-13	CWG 08-12-2013	MM 08-12-2013		THIS DRAWING REVISED TO INCORPORATE DESIGN CHANGE FDA 2015-000091-01-00 PER SK-0001-15-000091-01-00.

NOTES:

1. EQUIPMENT AND FLOOR DRAINS BY PURCHASER.
2. BURNER CONTROL AND FLAME SAFEGUARD SYSTEM FOR PIPING, INSTRUMENTATION AND ELECTRICAL CONTROL DETAILS SEE DWG. 0500-606 PO 665-02951.
3. FOR MECHANICAL SYMBOLS AND NOTES SEE DRAWING M1-0200.
4. NATIONWIDE BOILER INC. PO 665-02951.
5. DURING DRY LAYUP FUEL OIL LINE MUST BE DISCONNECTED AND PIPE CAPS/PLUGS INSTALLED.

REFERENCES:

1. DWG M1-0216
2. NATIONWIDE BOILER INCORPORATED BOILER B 289 - MANUAL PO 665-02951

DETAIL A

DRAWING M1-0213 REV CP-6
HAS BEEN SPLIT INTO THE FOLLOWING SHEETS:

M1-0213
M1-0213-01
M1-0213-A
M1-0213-B
M1-0213-C

NON-SAFETY

LUMINANT
CPNPP
GLEN ROSE, TEXAS

FLOW DIAGRAM
AUXILIARY STEAM SYSTEM

DWG. NO. M1-0213 | SH. NO. B | REV. CP-13

FSAR FIGURE 10.4-16

THIS DRAWING CREATED ELECTRONICALLY

REF CKD 05/31/05 CP-11

mc623300.dgn A M1-0213-B

FINAL PRINT

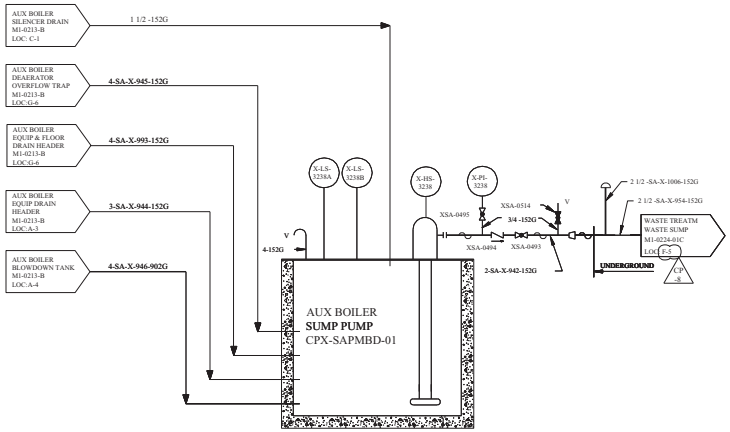

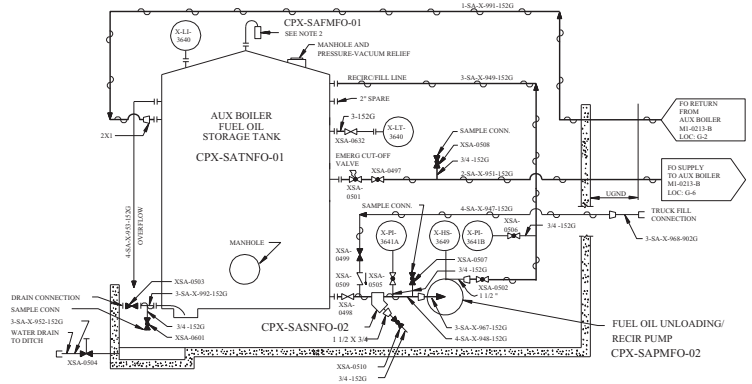

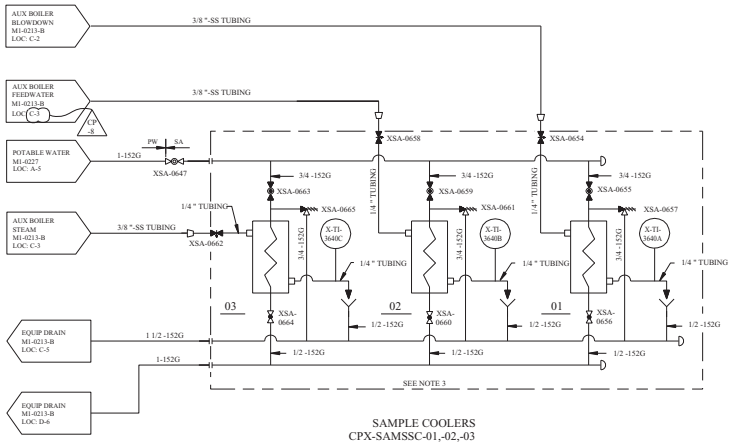

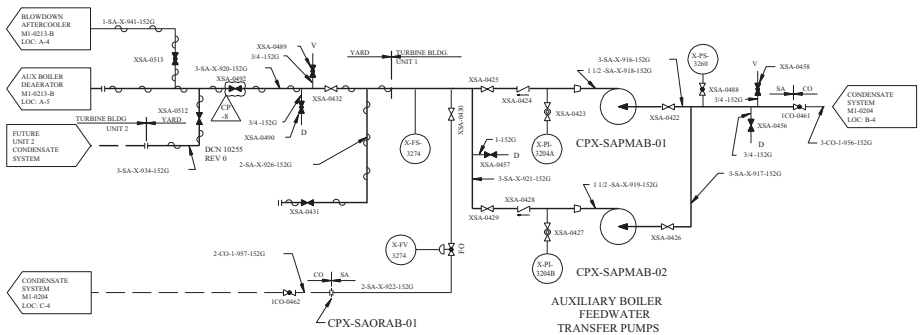

REV	DWN	CHKD	APVD	REMARKS
CP-8	JEM 10-24-1996			THIS DRAWING REVISED TO INCORPORATE DESIGN CHANGE DCN 10255 REV 0. EDITORIAL CHANGES AS NOTED.

NOTES:

1. FOR MECHANICAL SYMBOLS AND NOTES SEE DRAWING M1-0200.
2. FLAME ARRESTER SUPPLIED BY TANK MANUFACTURER.
3. WATERS EQUIPMENT CO DWG B-WC070000, PO 665-071490.
4. UNLESS OTHERWISE NOTED, DRAIN TO BE LOCALLY COLLECTED UNDER ADMINISTRATIVE CONTROL.

FSAR FIGURE 10.4-16

THIS DRAWING CREATED ELECTRONICALLY

DRAWING M1-0213 REV CP-6 HAS BEEN SPLIT INTO THE FOLLOWING SHEETS:
M1-0213
M1-0213-01
M1-0213-A
M1-0213-B
M1-0213-C

NON-SAFETY

TXU ELECTRIC
CPSES
GLEN ROSE, TEXAS

FLOW DIAGRAM
AUXILIARY STEAM SYSTEM

DWG. NO.	SH. NO.	REV.
M1-0213	C	CP-8

vs0000s8.dgn

$$$$$$$$DA ITESSSSS

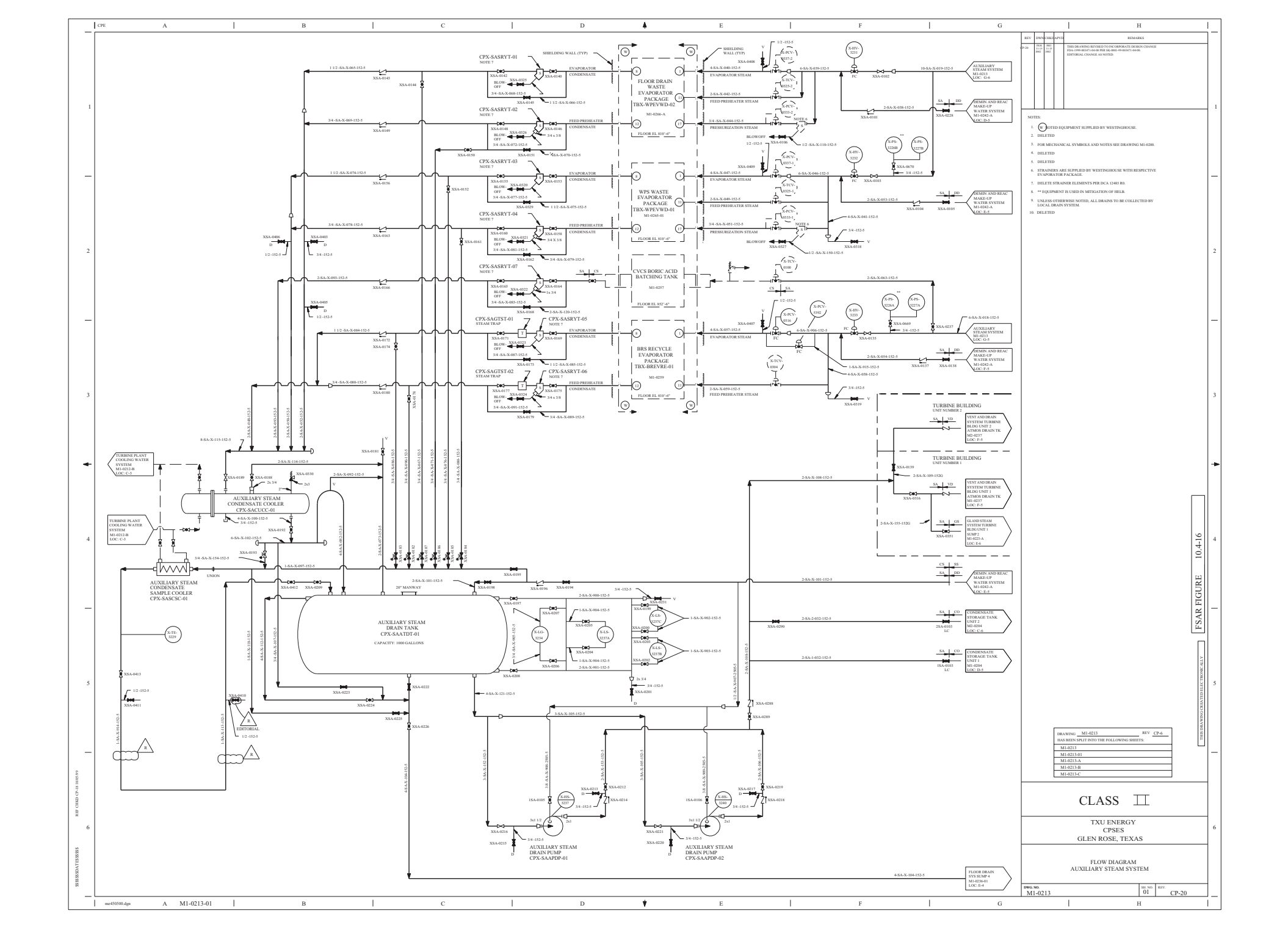

REV	DWN	CHK	APVD	REMARKS
CP-16	HAK 11/15/2002	SWO 11/15/2002		THIS DRAWING REVISED TO INCORPORATE DESIGN CHANGE EDA-1999-00247-144-00 PER SK-0001-99-00267I-04-00. EDITORIAL CHANGE AS NOTED.

NOTES:

1. (W) NOTED EQUIPMENT SUPPLIED BY WESTINGHOUSE.
2. DELETED
3. FOR MECHANICAL SYMBOLS AND NOTES SEE DRAWING M1-0200.
4. DELETED
5. DELETED
6. STRAINERS ARE SUPPLIED BY WESTINGHOUSE WITH RESPECTIVE EVAPORATOR PACKAGE.
7. DELETE STRAINER ELEMENTS PER DCA 12483 R0.
8. ** EQUIPMENT IS USED IN MITIGATION OF HELB.
9. UNLESS OTHERWISE NOTED, ALL DRAINS TO BE COLLECTED BY LOCAL DRAIN SYSTEM.
10. DELETED

DRAWING M1-0213 REV CP-6
HAS BEEN SPLIT INTO THE FOLLOWING SHEETS:

M1-0213
M1-0213-01
M1-0213-A
M1-0213-B
M1-0213-C

CLASS II

TXU ENERGY
CPSES
GLEN ROSE, TEXAS

FLOW DIAGRAM
AUXILIARY STEAM SYSTEM

DRG. NO. M1-0213 | SH. NO. 01 | REV. CP-20

FSAR FIGURE 10.4-16

THIS DRAWING CREATED ELECTRONICALLY

me450500.dgn A M1-0213-01

REF CHSD CP-16 10/18/99

SSSSSSDATSSSSS

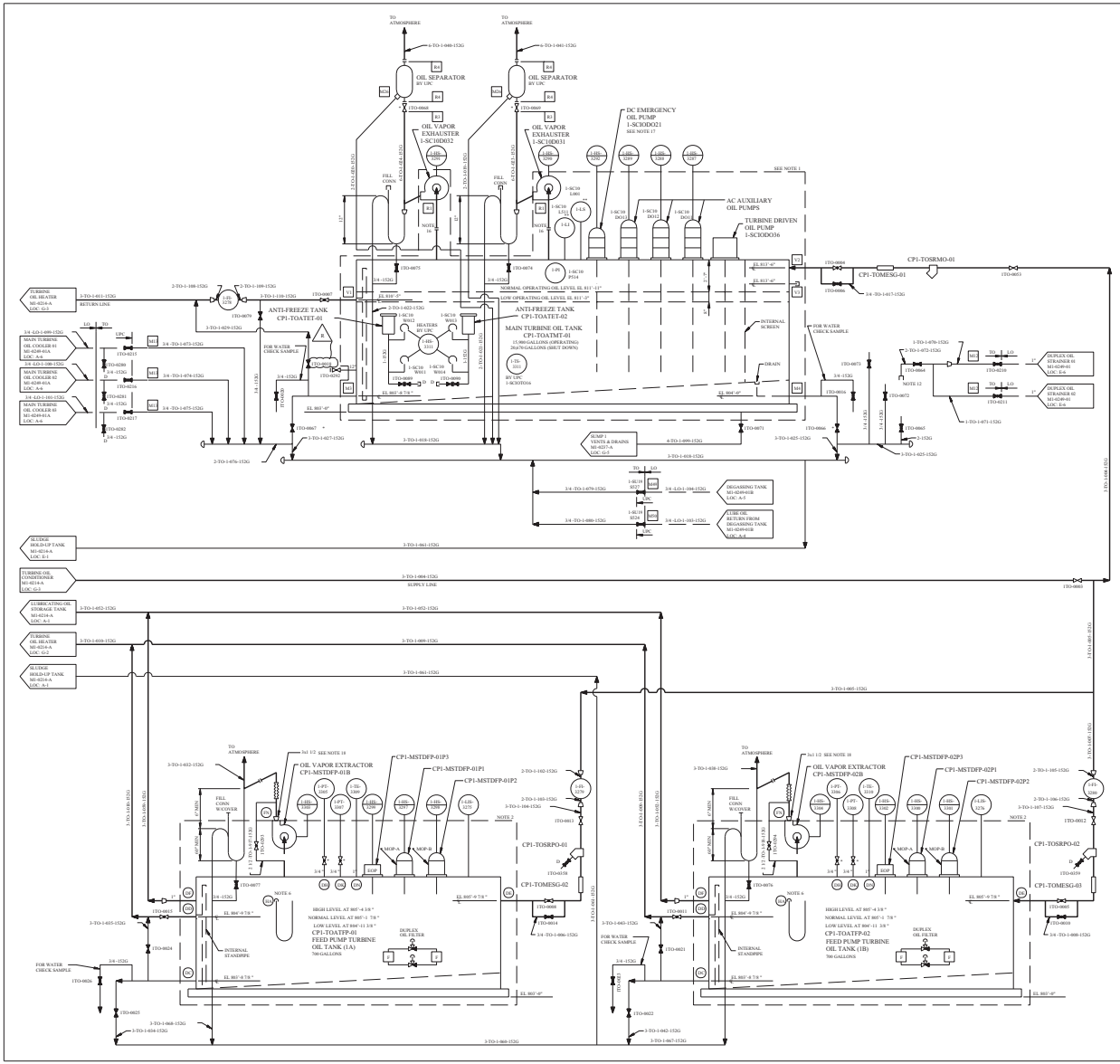

REV	DWN	CHKD	APVD	REMARKS
19-24	Scott Dunn	Dan Smith		THIS DRAWING REVISED TO INCORPORATE DESIGN CHANGE FDA-2004-0015010; SUPER SIL-0015-16-003/16-0136.

NOTES:

1. SUPPLIED BY UTILITY POWER COMPANY EXCEPT FOR INDICATED PIPING AND CONTROLS BEARING I&C CHANNEL NUMBERS. SEE UPC MEASURING POINT LIST FOR INSTRUMENTATION AND CONTROLS PROVIDED BY UPC. FOR ADDITIONAL UPC PIPING SEE M1-0249-01.
2. SUPPLIED BY GENERAL ELECTRIC.
3. DELETED
4. VALVES MARKED * ARE SUPPLIED BY EQUIPMENT MANUFACTURER.
5. DELETED
6. INTERNAL PRESSURE INDICATION MANOMETER FURNISHED BY GENERAL ELECTRIC AND MOUNTED BY CUSTOMER.
7. DELETED
8. DELETED
9. DELETED
10. UPC CUSTOMERS PIPING CONNECTION TAG NUMBERS ARE SHOWN (TYPICAL) 1/2
11. DELETED
12. UPC DUPLEX OIL STRAINER DRAINS USE TEMPORARY PIPING BETWEEN VALVES ITO-0664 AND ITO-0665
13. DELETED
14. INSTRUMENTS MARKED ** SUPPLIED BY VENDORS.
15. FOR MECHANICAL SYMBOLS AND NOTES SEE DRAWING MI-0200.
16. INSTALLATION OF CLOSURE DISC AND/OR BLIND FLANGE IS REQUIRED ONLY WHEN EXHAUSTER IS REMOVED.
17. FOR DETAILS OF TURBINE LUBE OIL SUPPLY REFER TO DIAGRAM OF LUBRICATION OIL PIPING (DWG TAG-98678 CP-0002).
18. A REDUCING BUSHING CAN BE ADDED, AS REQUIRED, TO THE INLET AND/OR OUTLET OF THE BLOWER TO MATCH THAT WHICH THE VENDOR PROVIDED. THIS BUSHING IS TO BE A HEX HEAD BUSHING, A-305 MATERIAL 3000 LB.

FSAR FIGURE 10.4-17

THIS DRAWING OR SPECIFICATION IS PROPRIETARY

DRAWING 3353-MI-0214 REV CP-6
HAS BEEN SPLIT INTO THE FOLLOWING SHEETS:
MI-0214
MI-0214-A

NON-SAFETY

TXU POWER
CPSES
GLEN ROSE, TEXAS

FLOW DIAGRAM
TURBINE OIL PURIFICATION

DWG. NO.	SH. NO.	REV.
M1-0214	1	CP-24

REF CKD 324/97 CN 19

$$$$$$$$DATE$$$$$$$$

tne517100.dgn

M1-0214

REV	DWN	CHKD	APVD	REMARKS
CP-23	DLK 04-11 2010	MM 04-12 2010		THIS DRAWING REVISED TO INCORPORATE DESIGN CHANGE FDA 2010-000056-01-00 PER SK-0001-10-000056-01-00.

NOTES:

1. SUPPLIED BY UTILITY POWER COMPANY EXCEPT FOR INDICATED PIPING AND CONTROLS BEARING I&C CHANNEL NUMBERS. SEE UPC MEASURING POINT LIST FOR INSTRUMENTATION AND CONTROLS PROVIDED BY UPC. FOR ADDITIONAL UPC PIPING SEE M1-0249-01.
2. DELETED
3. PURIFICATION EQUIPMENT TO BE SUPPLIED BY OTHERS, WITH ALL SUPERVISORY AND CONTROL INSTRUMENTATION EXCEPT AS OTHERWISE NOTED MOUNTED ON LOCAL CONTROL PANEL.
4. VALVES MARKED * ARE SUPPLIED BY EQUIPMENT MANUFACTURER.
5. CONDITIONER FEED PUMP AND LUBE OIL STORAGE TANK DRAIN PUMP EQUIPPED WITH INTERNAL RELIEF VALVES.
6. DELETED
7. LOCAL CONTROL PANEL TO BE SUPPLIED BY OTHERS AND MOUNTED ON HEATER SKID.
8. SUPPLIED BY OTHERS - INTERLOCK WITH 1-LV-3286A AND B. SEE NOTE 3 ON DWG M1-2214-01.
9. DRAINAGE PROVIDED BY DRUM OR PORTABLE PUMP USING TEMPORARY PIPING.
10. DELETED
11. TWO 5"-150 FF FLANGES ARE PROVIDED FOR THE FUTURE INSTALLATION OF TWO (2) CHROMALOX TMI-630 ELECTRIC HEATERS.
12. DELETED
13. DIP STICK SUPPLIED BY CLEAN LUBRICATING OIL STORAGE TANK MANUFACTURER. DO NOT STORE DIPSTICK IN FILL CONNECTION. THIS WILL MAKE VALVE 1TO-0343 INOPERABLE
14. INSTRUMENTS MARKED ** SUPPLIED BY VENDORS.
15. FOR MECHANICAL SYMBOLS AND NOTES SEE DRAWING M1-0200.
16. DRAIN PUMP EQUIPPED WITH INTERNAL RELIEF VALVES.
17. TANK HAS BEEN REMOVED FROM SERVICE, ABANDONED IN PLACE AND FILLED WITH INERT SOLIDS.

DRAWING M1-0214-A REV CP-4
HAS BEEN SPLIT INTO THE FOLLOWING SHEETS:
M1-0214-A
M1-0214-B

DRAWING 2323-M1-0214 REV CP-6
HAS BEEN SPLIT INTO THE FOLLOWING SHEETS:
M1-0214
M1-0214-A

FSAR FIGURE 10.4-17

THIS DRAWING CREATED ELECTRONICALLY

NON–SAFETY

LUMINANT
CPNPP
GLEN ROSE, TEXAS

FLOW DIAGRAM
TURBINE OIL PURIFICATION

DWG. NO. M1-0214 | SH. NO. A | REV. CP-23

FINAL PRINT

REF CKD 4/19/97 CP-13

me971700.dgn A M1-0214-A

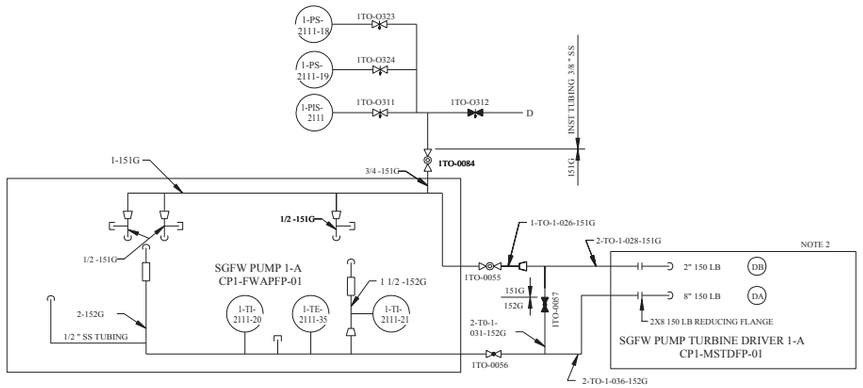

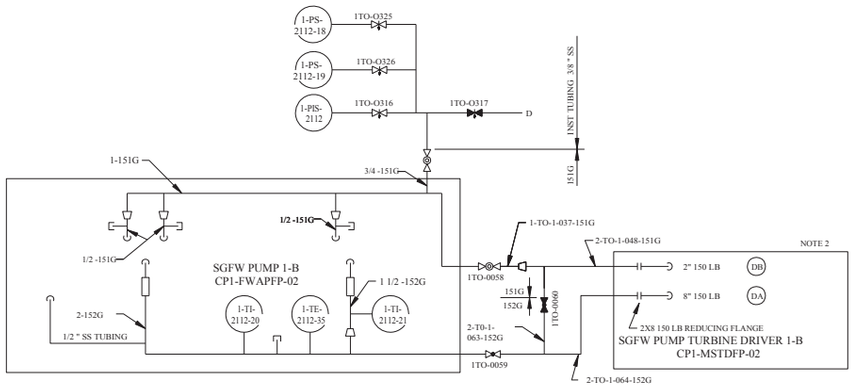

FEEDWATER-TURBINE LUBE OIL INTERFACES

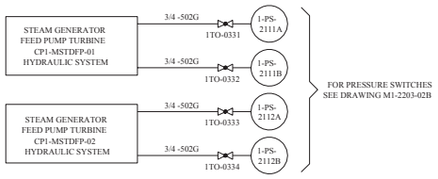

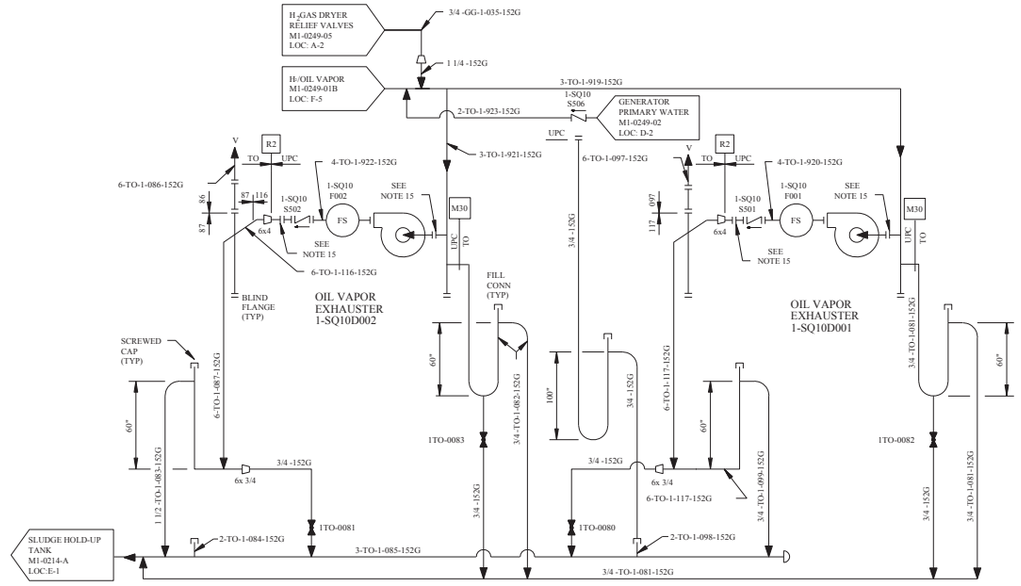

GENERATOR BEARING EXHAUSTERS

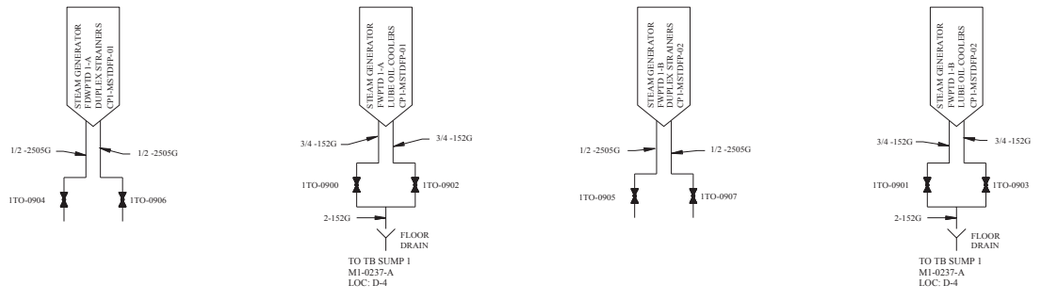

SGFW PUMPS MISC DRAINS

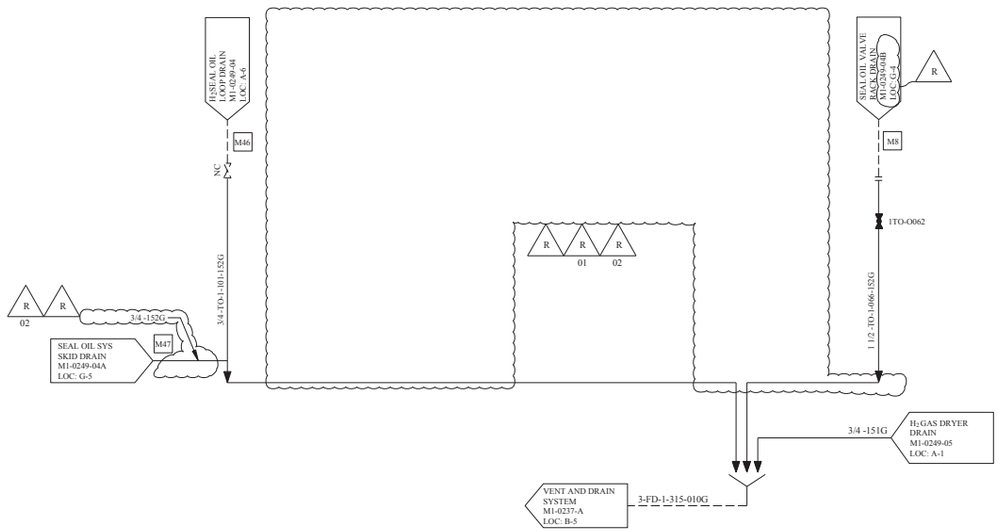

SEAL OIL DRAINS

REV	DWN	CHK	APVD	REMARKS
CP-15	MM 06-11 2007	MHF 06-11 2007		THIS DRAWING REVISED TO INCORPORATE DESIGN CHANGE FDA-2004-002055-01-05 PER SK-0002-04-002055-01-02.

NOTES:

1. SUPPLIED BY UTILITY POWER COMPANY EXCEPT FOR INDICATED PIPING AND CONTROLS BEARING I&C CHANNEL NUMBERS. SEE UPC MEASURING POINT LIST FOR INSTRUMENTATION AND CONTROLS PROVIDED BY UPC. FOR ADDITIONAL UPC PIPING SEE M1-0249-01.
2. SUPPLIED BY GENERAL ELECTRIC.
3. DELETED
4. DELETED
5. DELETED
6. DELETED
7. DELETED
8. DELETED
9. DELETED
10. UPC CUSTOMERS PIPING CONNECTION TAG NUMBERS ARE SHOWN (TYP). V2
11. DELETED
12. DELETED
13. DELETED
14. FOR MECHANICAL SYMBOLS AND NOTES SEE DRAWING M1-0200.
15. INSTALLATION OF CLOSURE DISC AND OR BLIND FLANGE IS REQUIRED ONLY WHEN EXHAUSTER IS REMOVED.

FSAR FIGURE 10.4-17

THIS DRAWING CREATED ELECTRONICALLY

DRAWING M1-0214-A REV CP-4
HAS BEEN SPLIT INTO THE FOLLOWING SHEETS:
M1-0214-A
M1-0214-B

NON–SAFETY

LUMINANT
CPSES
GLEN ROSE, TEXAS

FLOW DIAGRAM
TURBINE OIL PURIFICATION

DWG. NO.	SH. NO.	REV.
M1-0214	B	CP-15

REF CHK CP-1 I 12/03/96

REV	DWN	CHKD	APVD	REMARKS
CP-12	DLK 04-03 2006	MM 04-03 2006		THIS DRAWING REVISED TO INCORPORATE DESIGN CHANGE FDA-2004-000773-08-00 PER SK-0078-04-000773-08-00.

NOTES:

1. USE 6 DIAMETER BENDS WHERE SHOWN.
2. DRILL HOLES OR ARC GOUGE IN CURB PLATES FOR DRIP PAN DRAIN LINES FROM CONTROL FLUID SUPPLY RACKS.
3. WELD BACK TO BACK 90 BW ELLS TO FLANGE CONNECTION AT HYDRAULIC CONTROL EQUIPMENT RACK DRIP PAN DRAIN; NOTCH CURB PLATE AS NEEDED.
4. ALL DRAINS WILL BE COLLECTED LOCALLY UNDER ADMINISTRATIVE CONTROL, UNLESS OTHERWISE NOTED.

REFERENCE DRAWINGS:

1. MECHANICAL SYMBOLS AND NOTES	M1-0200
2. CONTROL FLUID PIPING COMPOSITE	BRP-CL-1-92021
3. CONTROL FLUID PIPING COMPOSITE	BRP-CL-2-92021
4. ICD M1-2214-06A	
5. E1-0012-A	
6. E2-0012-A	
7. E1-0069 SHEET 0	

FSAR FIGURE 10.4-17

THIS DRAWING CREATED ELECTRONICALLY

NON–SAFETY

TXU POWER
CPSES
GLEN ROSE, TEXAS

FLOW DIAGRAM
CONTROL FLUID
HOLD UP SYSTEM

DWG. NO.	SH. NO.	REV.
M1-0214	01	CP-12

REF CHKD 05-13-2003

me724000.dgn A M1-0214-01

FINAL PRINT

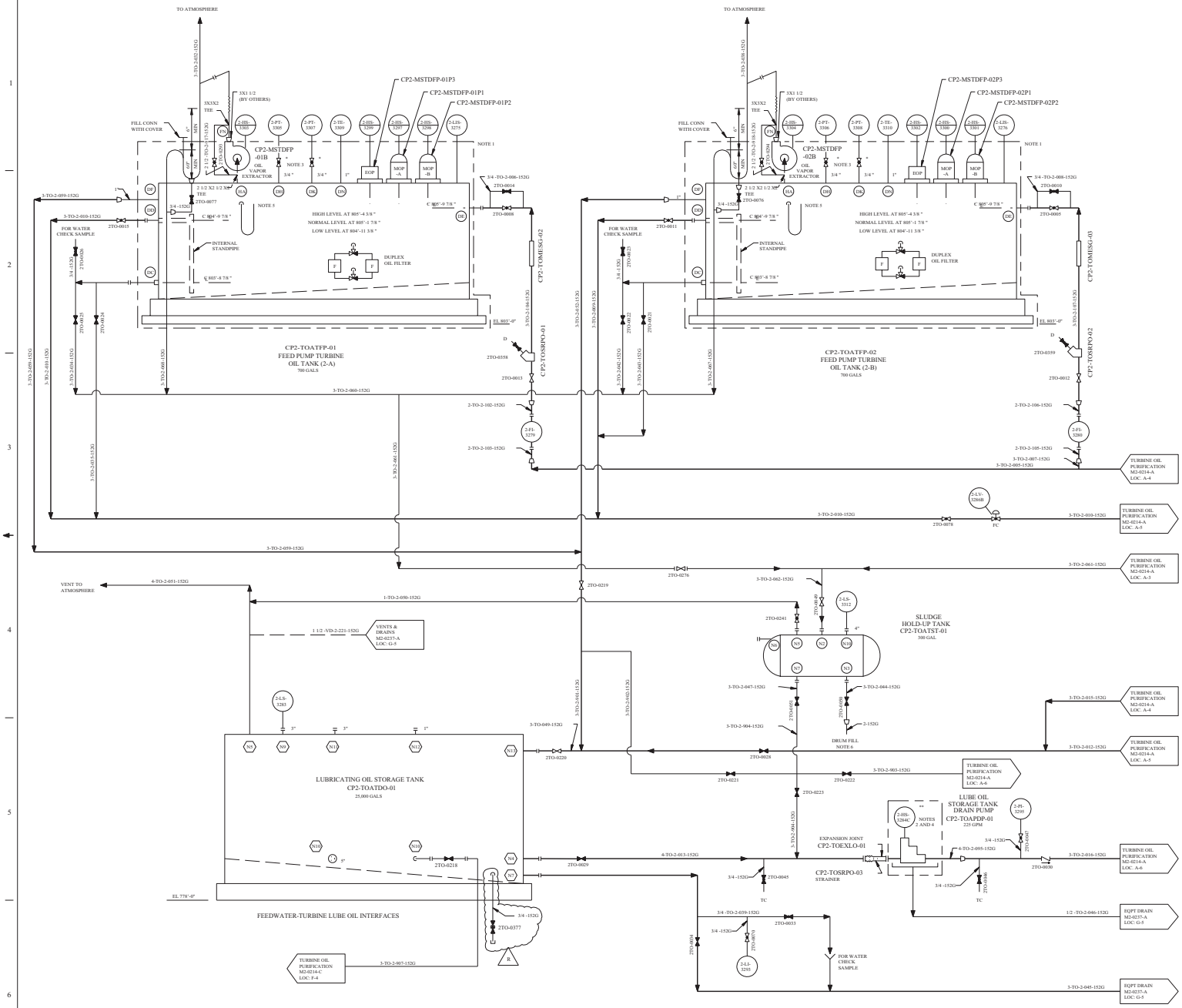

REV	DWN	CHKD	APVD	REMARKS
CP-13	SS 01-17 2002	CA 01-24 2002		THIS DRAWING REVISED TO INCORPORATE DESIGN CHANGE FDA-2001-002687-01-00 PER SK-0006-01-002687-01-00.

NOTES:

1. SUPPLIED BY GENERAL ELECTRIC.
2. PURIFICATION EQUIPMENT TO BE SUPPLIED BY OTHERS, WITH ALL SUPERVISORY AND CONTROL INSTRUMENTATION EXCEPT AS OTHERWISE NOTED MOUNTED ON LOCAL CONTROL PANEL.
3. VALVES MARKED * ARE SUPPLIED BY EQUIPMENT MANUFACTURER.
4. PURIFIER FEED PUMP AND DRAIN PUMP EQUIPPED WITH INTERNAL RELIEF VALVES.
5. INTERNAL PRESSURE INDICATION MANOMETER FURNISHED BY G E AND MOUNTED BY CUSTOMER.
6. DRAINAGE PROVIDED BY DRUM OR PORTABLE PUMP USING TEMPORARY PIPING.
7. INSTRUMENTS MARKED WITH ** SUPPLIED BY VENDORS.
8. FOR MECHANICAL SYMBOLS AND NOTES SEE DRAWING M1-0200.

FSAR FIGURE 10.4-17

THIS DRAWING CREATED ELECTRONICALLY

DRAWING 2323-M2-0214 REV CP-3
HAS BEEN SPLIT INTO THE FOLLOWING SHEETS:

M2-0214
M2-0214-A
M2-0214-B
M2-0214-C

NON-SAFETY

TXU ELECTRIC
CPSES
GLEN ROSE, TEXAS

FLOW DIAGRAM
TURBINE OIL PURIFICATION

DWG. NO. M2-0214 | SH. NO. - | REV. CP-13

REF CKD 3/20/97 CP-11

$$$$$$DATE$$$$$

mc387900.dgn M2-0214

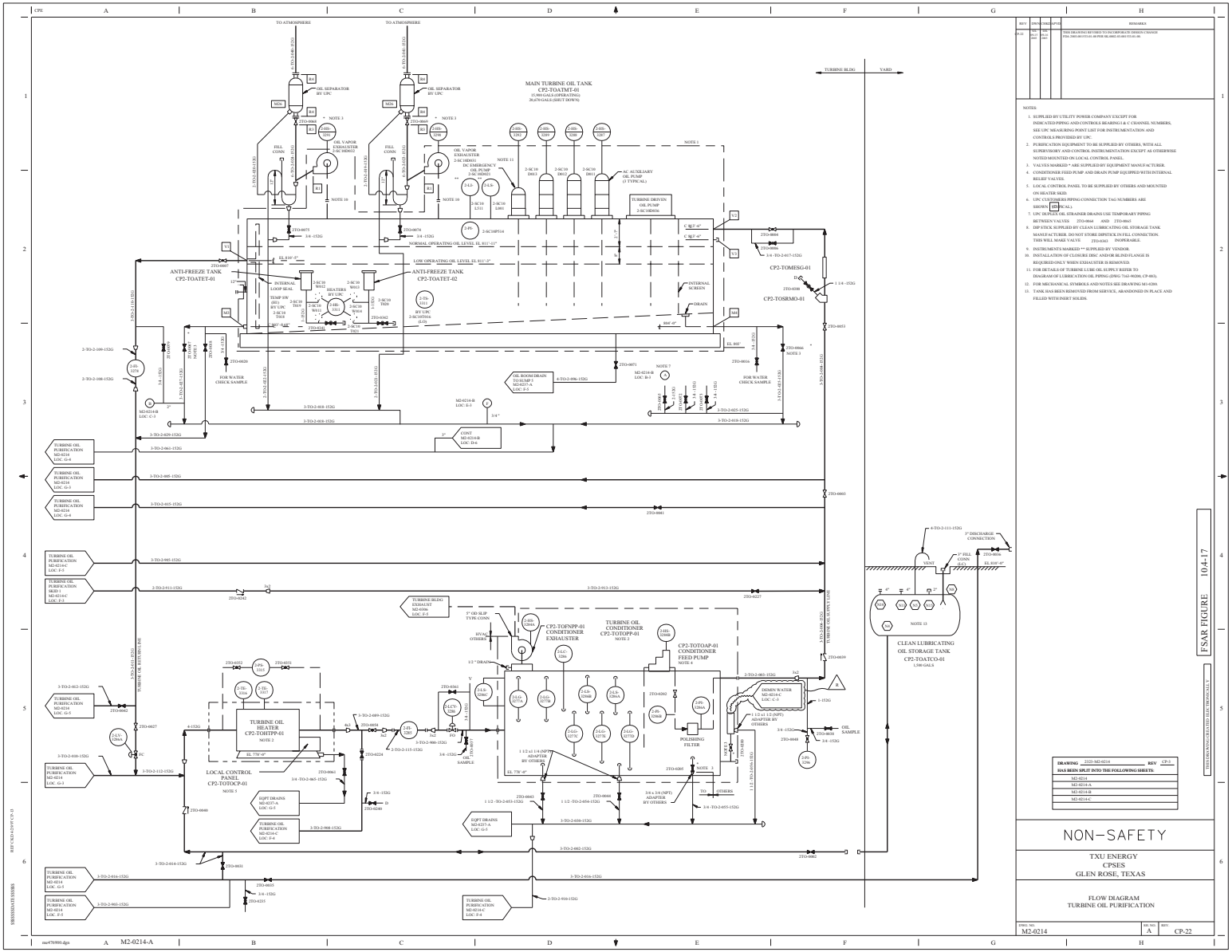
MAIN TURBINE OIL TANK
CP2-TOATNT-01
15,900 GALS (OPERATING)
20,670 GALS (SHUT DOWN)
ANTI-FREEZE TANK
CP2-TOATET-01
ANTI-FREEZE TANK
CP2-TOATET-02
CP2-TOMESG-01
CP2-TOSRMO-01
CLEAN LUBRICATING
OIL STORAGE TANK
CP2-TOATCO-01
1,590 GALS
TURBINE OIL
CONDITIONER
CP2-TOTOPP-01
NOTE 2
CP2-TOTOAP-01
CONDITIONER
FEED PUMP
NOTE 4
CP2-TOFNPP-01
CONDITIONER
EXHAUST
TURBINE OIL
HEATER
CP2-TOHTPP-01
NOTE 2
LOCAL CONTROL
PANEL
CP2-TOTOCP-01
NOTE 3
POLISHING
FILTER
TURBINE OIL
PURIFICATION
MZ-0214
LOC. G-4
TURBINE OIL
PURIFICATION
MZ-0214
LOC. G-5
TURBINE OIL
PURIFICATION
MZ-0214C
LOC. F-5
TURBINE OIL
PURIFICATION
SKID 1
MZ-0214-C
LOC. F-5
TURBINE OIL
PURIFICATION
MZ-0214
LOC. G-3
TURBINE OIL
PURIFICATION
MZ-0214
LOC. G-6
TURBINE OIL
PURIFICATION
MZ-0214C
LOC. F-4
TURBINE BLDG
EXHAUST
MZ-0206
LOC. F-3
TURBINE BLDG
YARD
TO ATMOSPHERE
OIL SEPARATOR
BY UPC
OIL VAPOR
EXHAUSTER
(W. MIST)
FILL
CONN
OIL VAPOR
EXHAUSTER
2-SC10D011
DC EMERGENCY
OIL PUMP
2-SC10D012
(W. MIST)
TURBINE DRIVEN
OIL PUMP
2-SC10D016
AC AUXILIARY
OIL PUMP
(3 TYPICAL)
INTERNAL
LOOP SEAL
HEATERS
BY UPC
TEMP SW
HIGH
BY UPC
2-SC10
TH19
2-SC10
TH20
2-SC10
TH21
INTERNAL
SCREEN
DRAIN
FOR WATER
CHECK SAMPLE
OIL ROOM DRAIN
TO SUMP A
MZ-0214
LOC. F-5
JOINT
MZ-0214-B
LOC. D-4
JOINT
MZ-0214-B
LOC. C-3
MZ-0214-B
LOC. E-3
MZ-0214-B
LOC. B-3
TURBINE OIL
HEATER
CP2-TOHTPP-01
NOTE 2
LOCAL CONTROL
PANEL
CP2-TOTOCP-01
NOTE 3
EQPT DRAINS
MZ-0227-A
LOC. G-5
EQPT DRAINS
MZ-0227-A
LOC. G-5
TURBINE OIL
PURIFICATION
MZ-0214-C
LOC. F-4
TURBINE OIL
PURIFICATION
MZ-0214-C
LOC. F-4
TURBINE OIL
PURIFICATION
MZ-0214
LOC. G-3
TURBINE OIL
PURIFICATION
MZ-0214
LOC. G-5
HVAC
OTHERS
1/2 " DRAIN
3/4 " SAMPLE
1 1/2 x1 1/4 (NPT)
ADAPTER
BY OTHERS
3/4 x 3/4 (NPT)
ADAPTER
BY OTHERS
TO OTHERS
3/4 -152G
OIL
SAMPLE
1 1/4 -152G
1 1/2 -152G
2 -152G
2 1/2 -152G
3 -152G
4 -152G
6 -152G
8 -152G
10 -152G
12 -152G
3/4 -TO-2-655-152G
1 1/2 -TO-2-654-152G
1 1/2 -TO-2-655-152G
3/4 -TO-2-665-152G
3/4 -TO-2-666-152G
3/4 -TO-2-667-152G
3/4 -TO-2-668-152G
1 1/4 -TO-2-669-152G
1 1/4 -TO-2-670-152G
1 1/4 -TO-2-671-152G
1 1/4 -TO-2-672-152G
1 1/4 -TO-2-673-152G
1 1/4 -TO-2-674-152G
1 1/4 -TO-2-675-152G
1 1/4 -TO-2-676-152G
1 1/4 -TO-2-677-152G
1 1/4 -TO-2-678-152G
1 1/4 -TO-2-679-152G
1 1/4 -TO-2-680-152G
1 1/4

UPC OIL SYSTEM DRAINS

CONTROL FLUID DRAINS

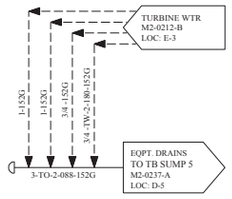

SGFW PUMPS MISC DRAINS

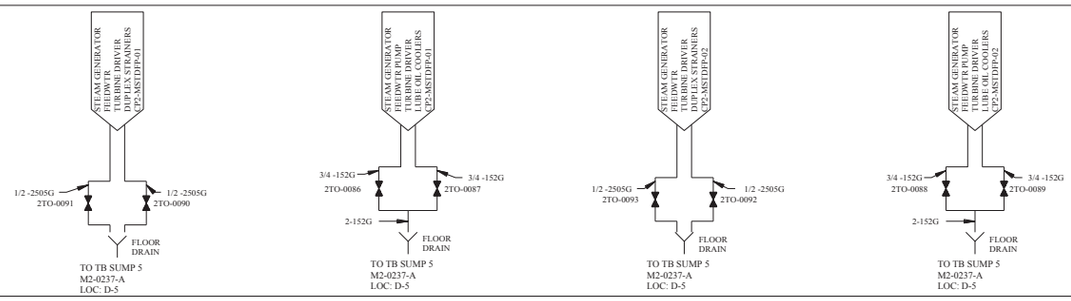

TURBINE LUBRICATING OIL DRAINS

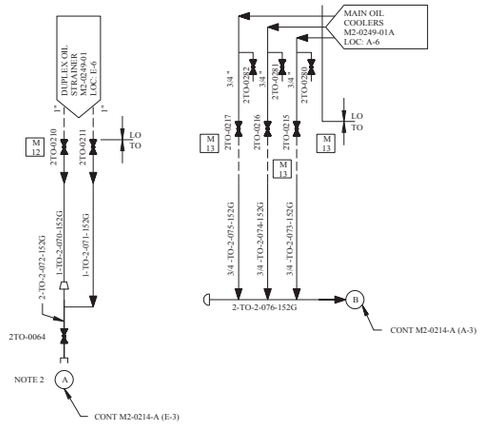

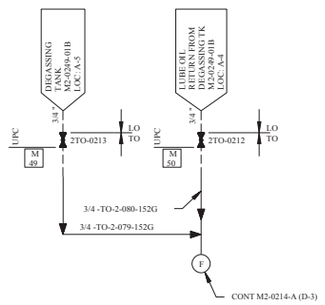

SEAL OIL DRAINS

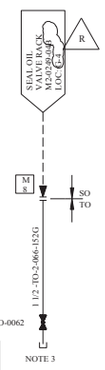



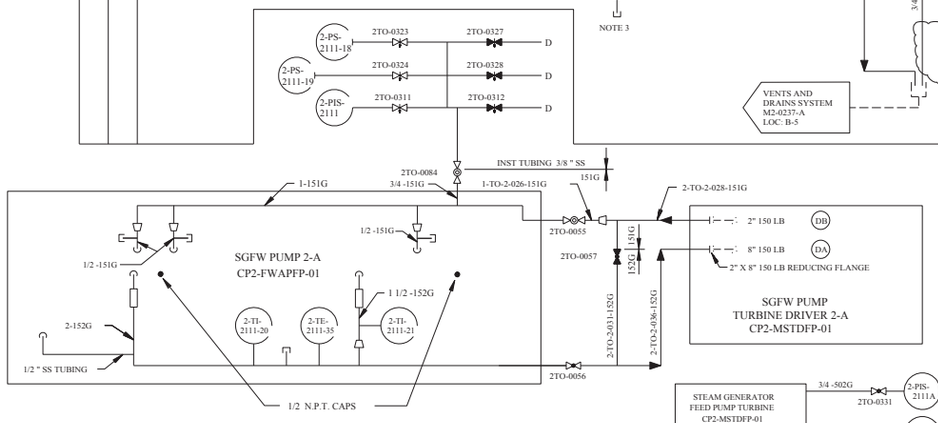

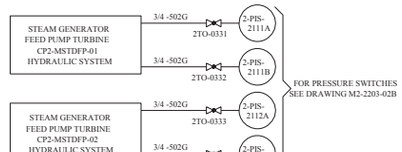

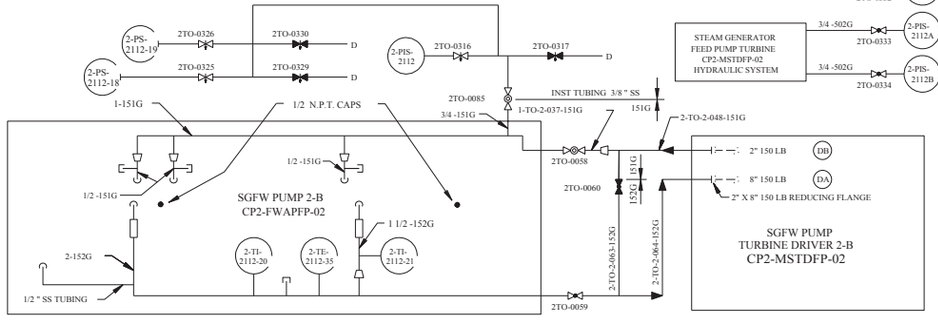

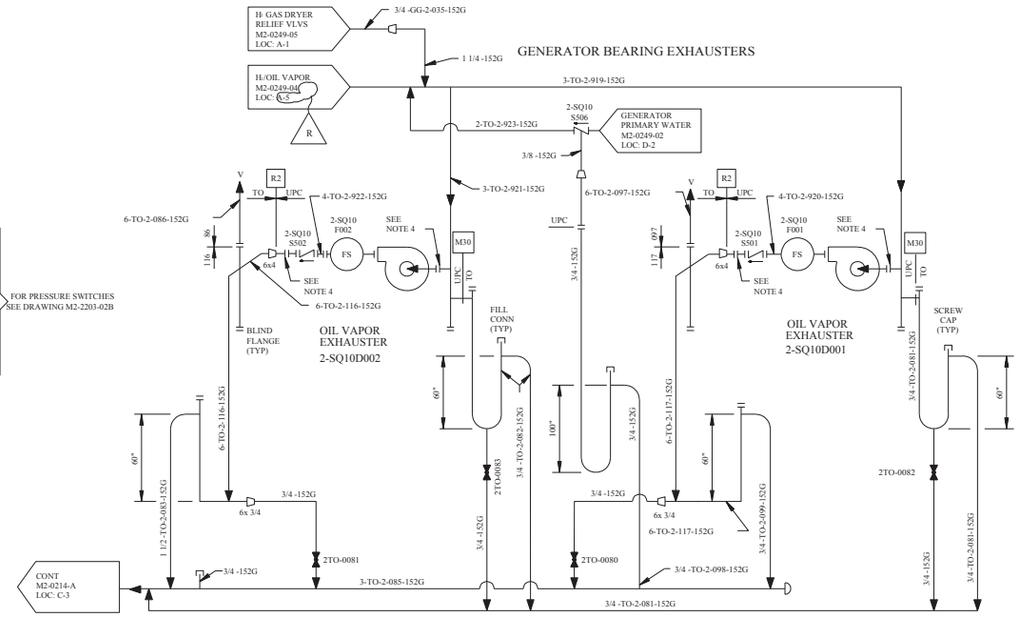

REV	DWN	CHK	APVD	REMARKS
CP-14	DLK 06-27-2007	MM 07-03-2007		THIS DRAWING REVISED TO INCORPORATE DESIGN CHANGE FDA 2004-002055-06-00 PER SK-0060-04-002055-06-00.

NOTES:

1. UPC CUSTOMERS PIPING CONNECTION TAG NUMBERS ARE SHOWN (XX) TYPICAL).
2. UPC DUPLEX OIL STRAINER DRAINS USE TEMPORARY PIPING BETWEEN VALVES 2TO-0064 AND 2TO-0065 .
3. SCREWED CAP TO REMAIN IN PLACE EXCEPT WHILE OIL IS BEING COLLECTED.
4. INSTALLATION OF CLOSURE DISC AND/OR BLIND FLANGE IS REQUIRED ONLY WHEN EXHAUSTER IS REMOVED.

FSAR FIGURE 10.4-17

THIS DRAWING CREATED ELECTRONICALLY

DRAWING 2323-M2-0214 REV CP-3 HAS BEEN SPLIT INTO THE FOLLOWING SHEETS:
M2-0214
M2-0214-A
M2-0214-B
M2-0214-C

NON–SAFETY

LUMINANT
CPSES
GLEN ROSE, TEXAS

FLOW DIAGRAM
TURBINE OIL PURIFICATION

DWG. NO.	SH. NO.	REV.
M2-0214	B	CP-14

REF CKD 2/27/97 CP-9

REV	DWN	CHKD	APVD	REMARKS
CP-14	DJS 01-31 2005	MHF 01-31 2005		THIS DRAWING REVISED TO INCORPORATE DESIGN CHANGE FDA-2003-001388-01-00 PER SK-0002-03-001388-01-00.

NOTES

1. PURIFICATION EQUIPMENT TO BE SUPPLIED BY OTHERS, WITH ALL SUPERVISORY AND CONTROL INSTRUMENTATION EXCEPT AS OTHERWISE NOTED MOUNTED ON LOCAL CONTROL PANEL.
2. VALVES MARKED * ARE SUPPLIED BY EQUIPMENT MANUFACTURER.
3. PURIFIER FEED PUMP EQUIPPED WITH INTERNAL RELIEF VALVE.
4. INSTRUMENTS MARKED ** SUPPLIED BY VENDOR.
5. THIS HOSE CONNECTION MAY BE UTILIZED TO MAKE UP WATER TO TURBINE CONDITIONER CP2-TOTOPP-01 OR OIL PURIFICATION CENTRIFUGE SKID CP2-TOCPNB-01.

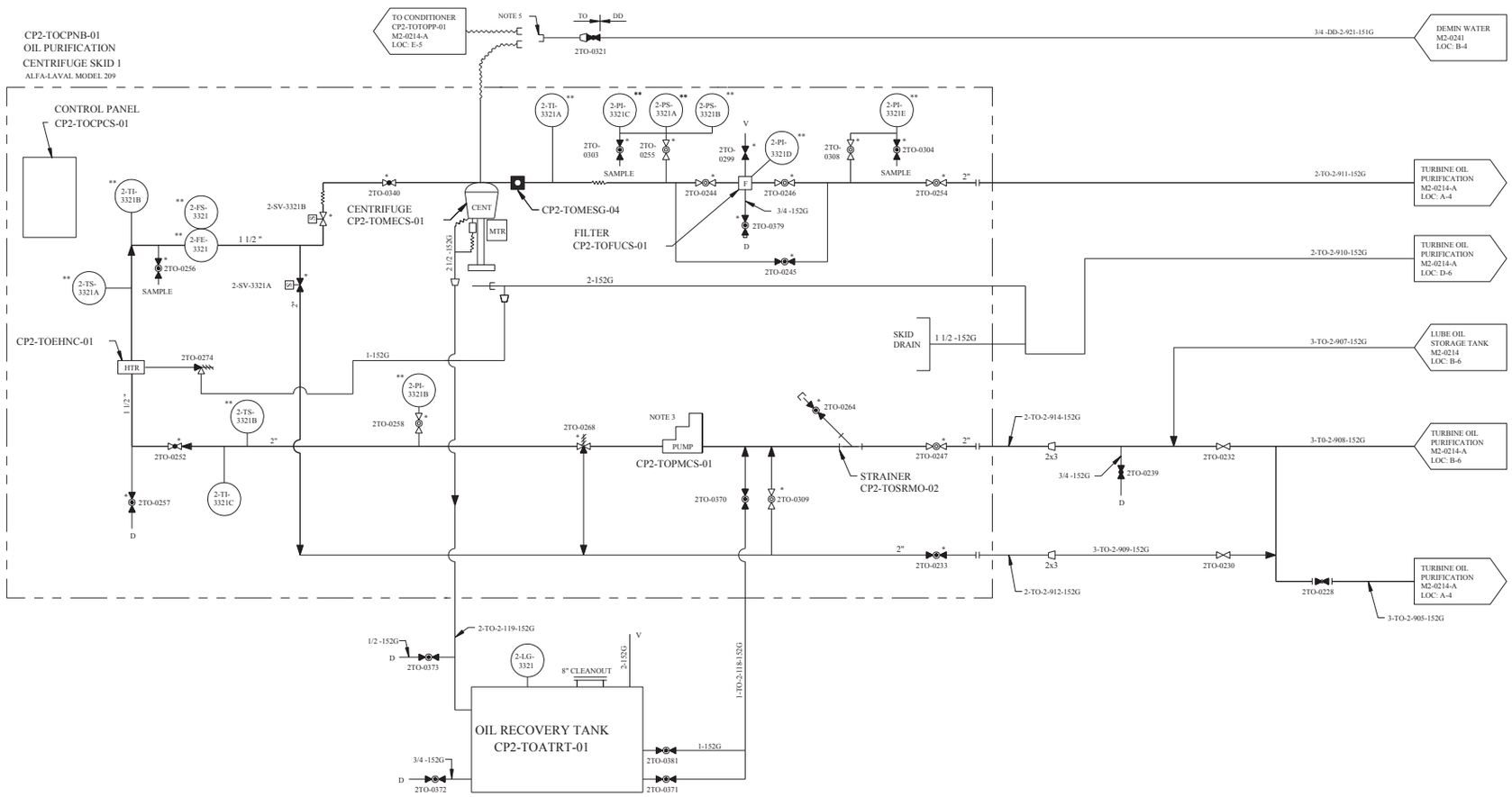

FSAR FIGURE 10.4-17

THIS DRAWING CREATED ELECTRONICALLY

DRAWING 2323-M2-0214 REV CP-3
HAS BEEN SPLIT INTO THE FOLLOWING SHEETS:
M2-0214
M2-0214-A
M2-0214-B
M2-0214-C

NON–SAFETY

TXU POWER
CPSES
GLEN ROSE, TEXAS

FLOW DIAGRAM
TURBINE OIL PURIFICATION

DWG. NO.	SH. NO.	REV.
M2-0214	C	CP-14

REF CKD 1/7/98 CP-8

me697000.dgn A M2-0214-C

FINAL PRINT

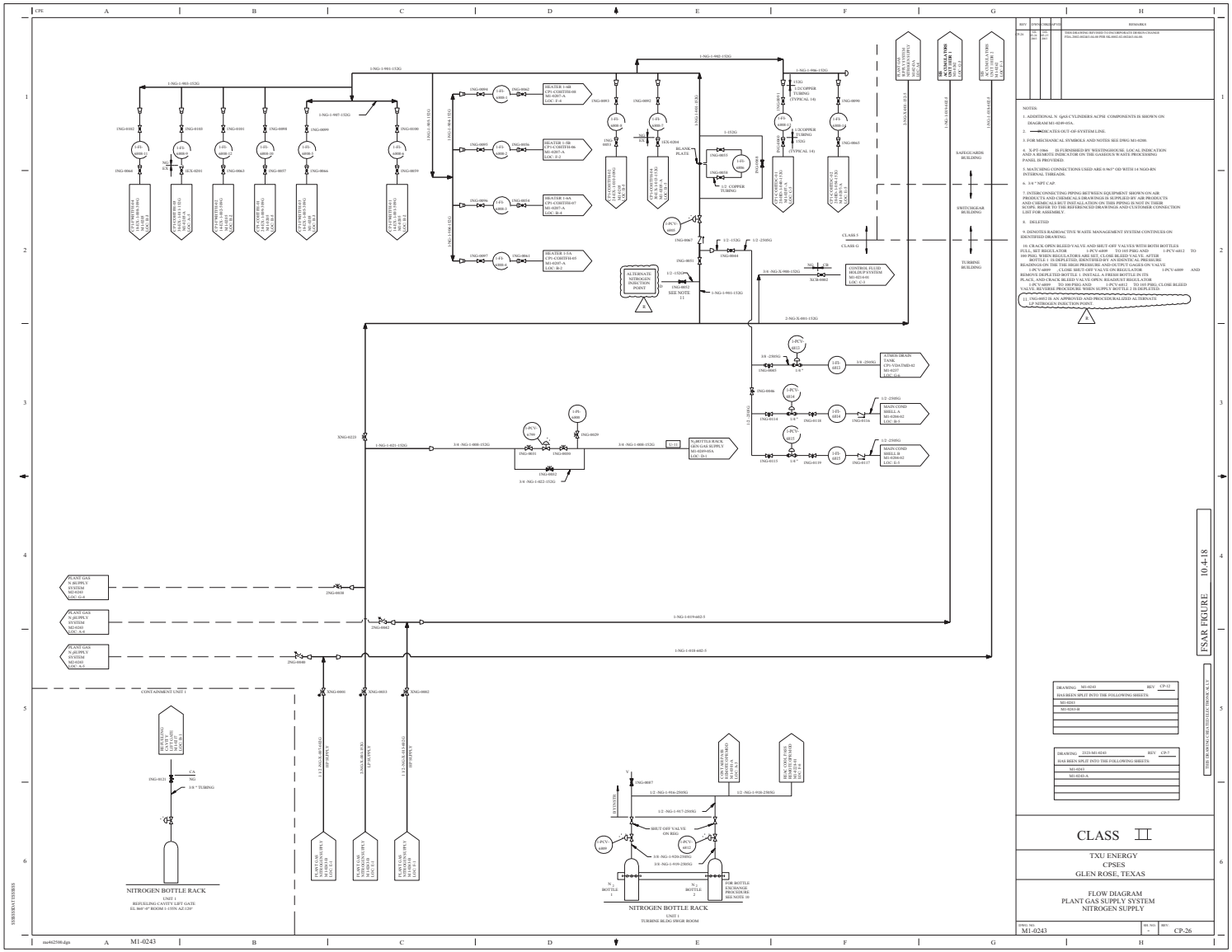
CLASS II
TXU ENERGY
CPSES
GLEN ROSE, TEXAS
FLOW DIAGRAM
PLANT GAS SUPPLY SYSTEM
NITROGEN SUPPLY
DRWG NO. M1-0243
REV CP-26
NOTES:
1. ADDITIONAL N2 QAS CYLINDERS ACPSI COMPONENTS IS SHOWN ON DIAGRAM M1-0238-05A.
2. INDICATES OUT-OF-SYSTEM LINE.
3. FOR MECHANICAL SYMBOLS AND NOTES SEE DWG M1-0200.
4. X-PT-106A IS FURNISHED BY WESTINGHOUSE, LOCAL INDICATION AND A REMOTE INDICATOR ON THE GASKRUCK WASTE PROCESSING PANEL IS PROVIDED.
5. MATCHING CONNECTIONS USED ARE 0.963" OD WITH 14 NGO-RN INTERNAL THREADS.
6. 3/4 " NPT CAP.
7. INTERCONNECTING PIPING BETWEEN EQUIPMENT SHOWN ON AIR PRODUCTS AND CHEMICALS DRAWINGS IS SUPPLIED BY AIR PRODUCTS AND CHEMICALS BUT INSTALLATION ON THIS PIPING IS NOT IN THEIR SCOPE. REFER TO THE REFERENCED DRAWINGS AND CUSTOMER CONNECTION LIST FOR ASSEMBLY.
8. DELETED
9. DENOTES RADIOACTIVE WASTE MANAGEMENT SYSTEM CONTINUES ON IDENTIFIED DRAWING.
10. CRACK OPEN BLEED VALVE AND SHUT-OFF VALVES WITH BOTH BOTTLES FULL, SET REGULATOR 1-PCV-6009 TO 185 PSIG AND 1-PCV-6012 TO 100 PSIG. WHEN REGULATORS ARE SET, CLOSE BLEED VALVE. AFTER BOTTLE 1 IS DEPLETED, IDENTIFIED BY AN ISONTICAL PRESSURE READINGS ON THE THE HIGH PRESSURE AND OUTPUT GAGES ON VALVE 1-PCV-6009 CLOSE SHUT-OFF VALVE ON REGULATOR 1-PCV-6009 AND REMOVE DEPLETED BOTTLE 1. INSTALL A FRESH BOTTLE IN ITS PLACE AND OPEN SHUT-OFF VALVE ON REGULATOR 1-PCV-6009 AND 1-PCV-6012 TO 185 PSIG AND 1-PCV-6012 TO 100 PSIG. CLOSE BLEED VALVE. REVERSE PROCEDURE WHEN SUPPLY BOTTLE 2 IS DEPLETED.
11. 1NG-0002 IS AN APPROVED AND PROCEDURALIZED ALTERNATE LP NITROGEN INJECTION POINT.
NITROGEN BOTTLE RACK
UNIT 1
REFUELING CAVITY LIFT GATE
EL 860'-0" ROOM 1-155N AZ 120°
NITROGEN BOTTLE RACK
UNIT 1
TURBINE BLDG SWGR ROOM
CONTAINMENT UNIT 1
DRAWING M1-0240 REV CP-12
HAS BEEN SPLIT INTO THE FOLLOWING SHEETS:
M1-0243
M1-0243-B
DRAWING 2323-M1-0243 REV CP-7
HAS BEEN SPLIT INTO THE FOLLOWING SHEETS:
M1-0243
M1-0243-A
FSAR FIGURE 10.4-18
THIS DRAWING CREATED USING PRODUCT RX 3.7
M1-0243
M1-0243
CP-26

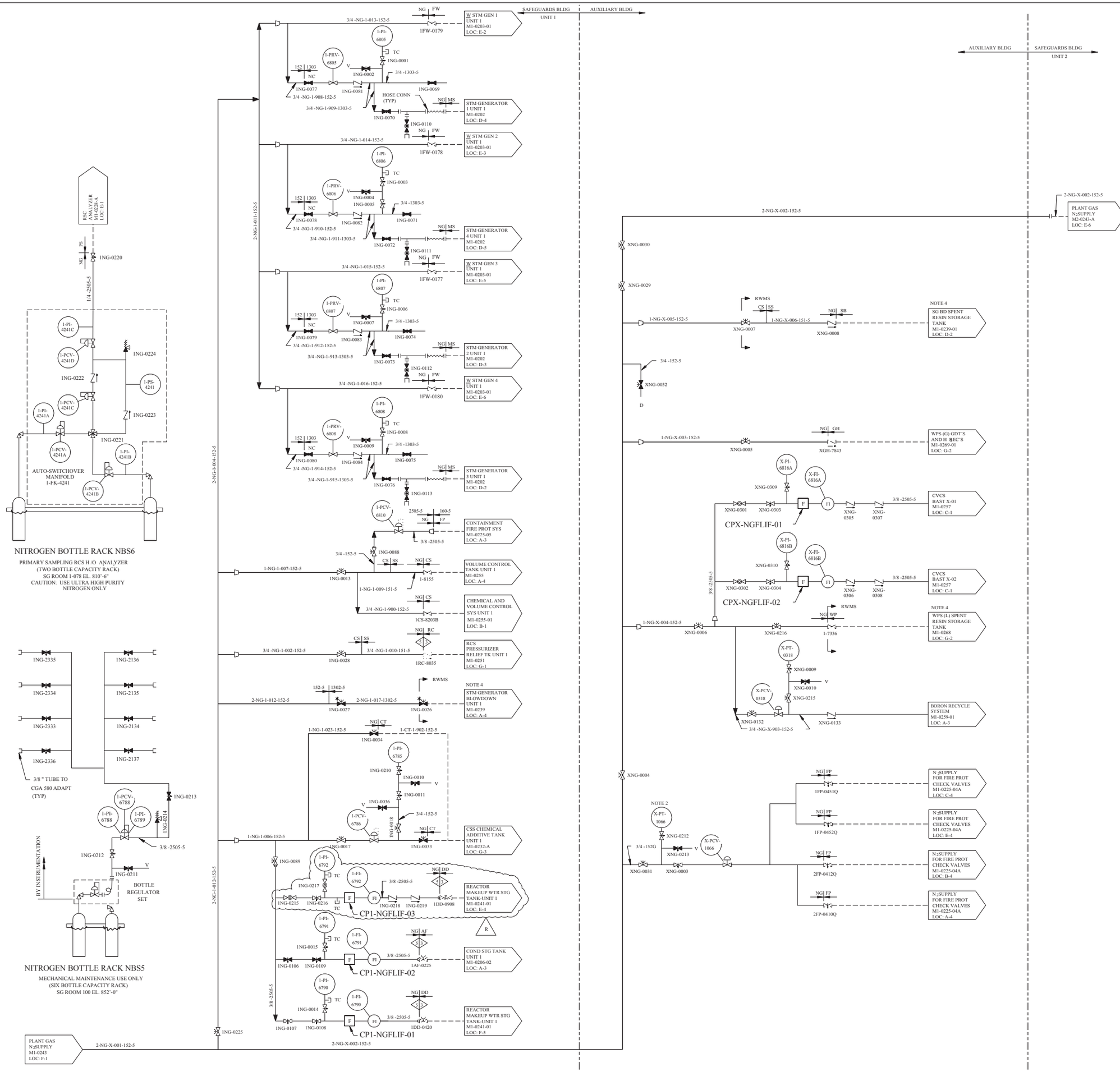

REV	DWN	CHK	APVD	REMARKS
CP-26	JRMC 12-06 2004	DJL 12-07 2004		THIS DRAWING REVISED TO INCORPORATE DESIGN CHANGE FDA-2004-002128-01-00 PER SK-0004-04-002128-01-00.

NOTES:

1. FOR MECHANICAL SYMBOLS AND NOTES SEE DWG M1-0200.
2. X-PT-1066 IS FURNISHED BY WESTINGHOUSE. LOCAL INDICATION AND A REMOTE INDICATOR ON THE GASEOUS WASTE PROCESSING PANEL IS PROVIDED.
3. DELETED
4. DENOTES RADIOACTIVE WASTE MANAGEMENT SYSTEM CONTINUES ON THE IDENTIFIED DRAWING.

FSAR FIGURE 10.4-18

THIS DRAWING CREATED ELECTRONICALLY

DRAWING M1-0243-A REV CP-10
HAS BEEN SPLIT INTO THE FOLLOWING SHEETS:
M1-0243-A
M2-0243-A

DRAWING 2323-M1-0243 REV CP-7
HAS BEEN SPLIT INTO THE FOLLOWING SHEETS:
M1-0243
M1-0243-A

CLASS II

LUMINANT
CPSES
GLEN ROSE, TEXAS

FLOW DIAGRAM
PLANT GAS SUPPLY SYSTEM
NITROGEN SUPPLY

DWG NO. M1-0243 | SH. NO. A | REV. CP-26

FINAL PRINT

REF CKD CP-20 01/10/97

me623500.dgn A M1-0243-A

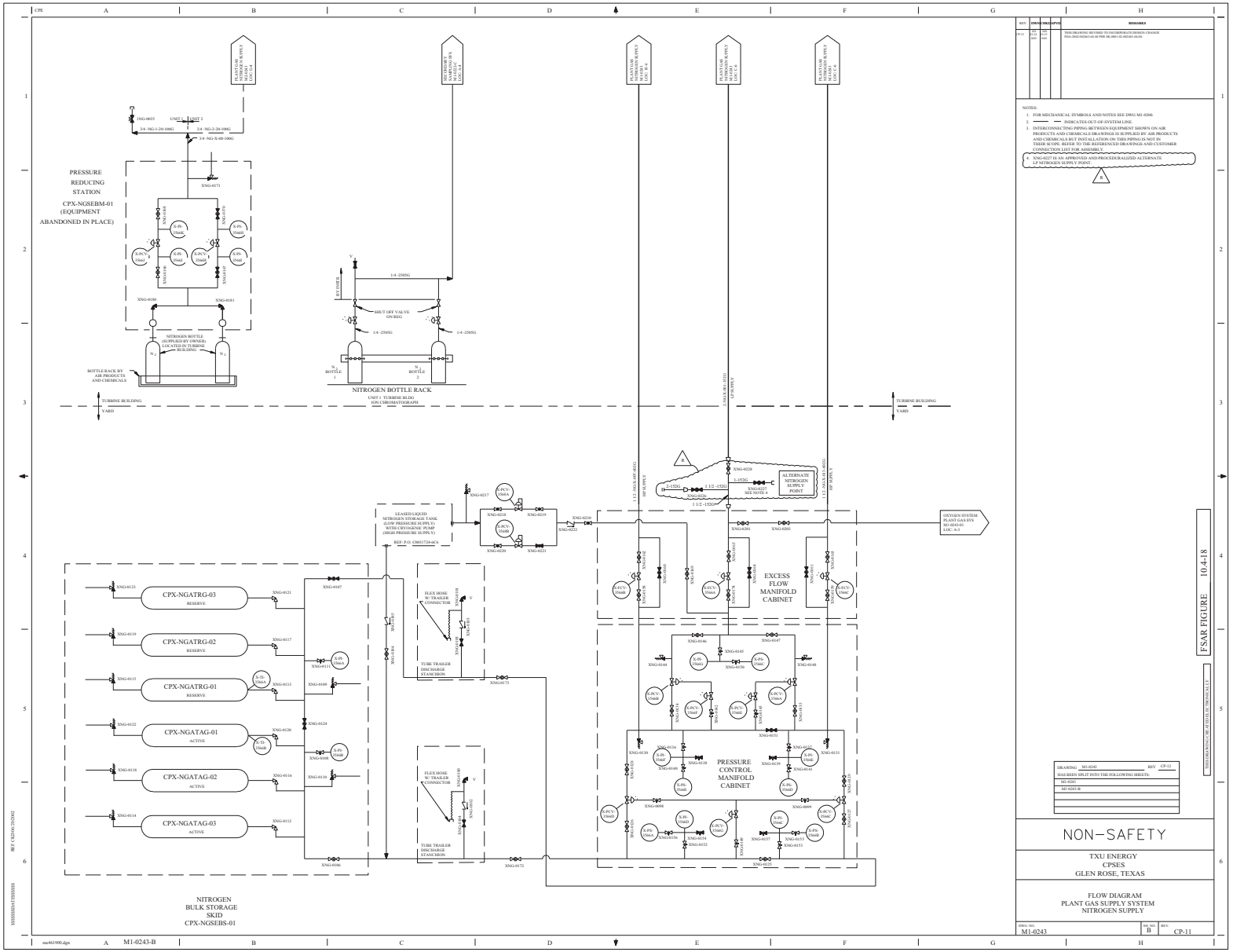
PRESSURE REDUCING STATION CPX-NGSEBM-01 (EQUIPMENT ABANDONED IN PLACE)
NITROGEN BOTTLE RACK
NITROGEN BULK STORAGE SKID CPX-NGSEBS-01
CPX-NGATRG-03 RESERVE
CPX-NGATRG-02 RESERVE
CPX-NGATRG-01 RESERVE
CPX-NGATAG-01 ACTIVE
CPX-NGATAG-02 ACTIVE
CPX-NGATAG-03 ACTIVE
LEASED LIQUID NITROGEN STORAGE TANK (LOW PRESSURE SUPPLY) WITH CRYOGENIC PUMP (HIGH PRESSURE SUPPLY)
REF P.O. C0031724-6CS
EXCESS FLOW MANIFOLD CABINET
PRESSURE CONTROL MANIFOLD CABINET
ALTERNATE NITROGEN SUPPLY POINT
OXYGEN SYSTEM PLANT GAS SYS M1-0243-01 LOC A-3
TURBINE BUILDING
YARD
NON-SAFETY
TXU ENERGY
CPSES
GLEN ROSE, TEXAS
FLOW DIAGRAM
PLANT GAS SUPPLY SYSTEM
NITROGEN SUPPLY
DWG NO. M1-0243
REV. B
REV: CP-11
FSAR FIGURE 10.4-18

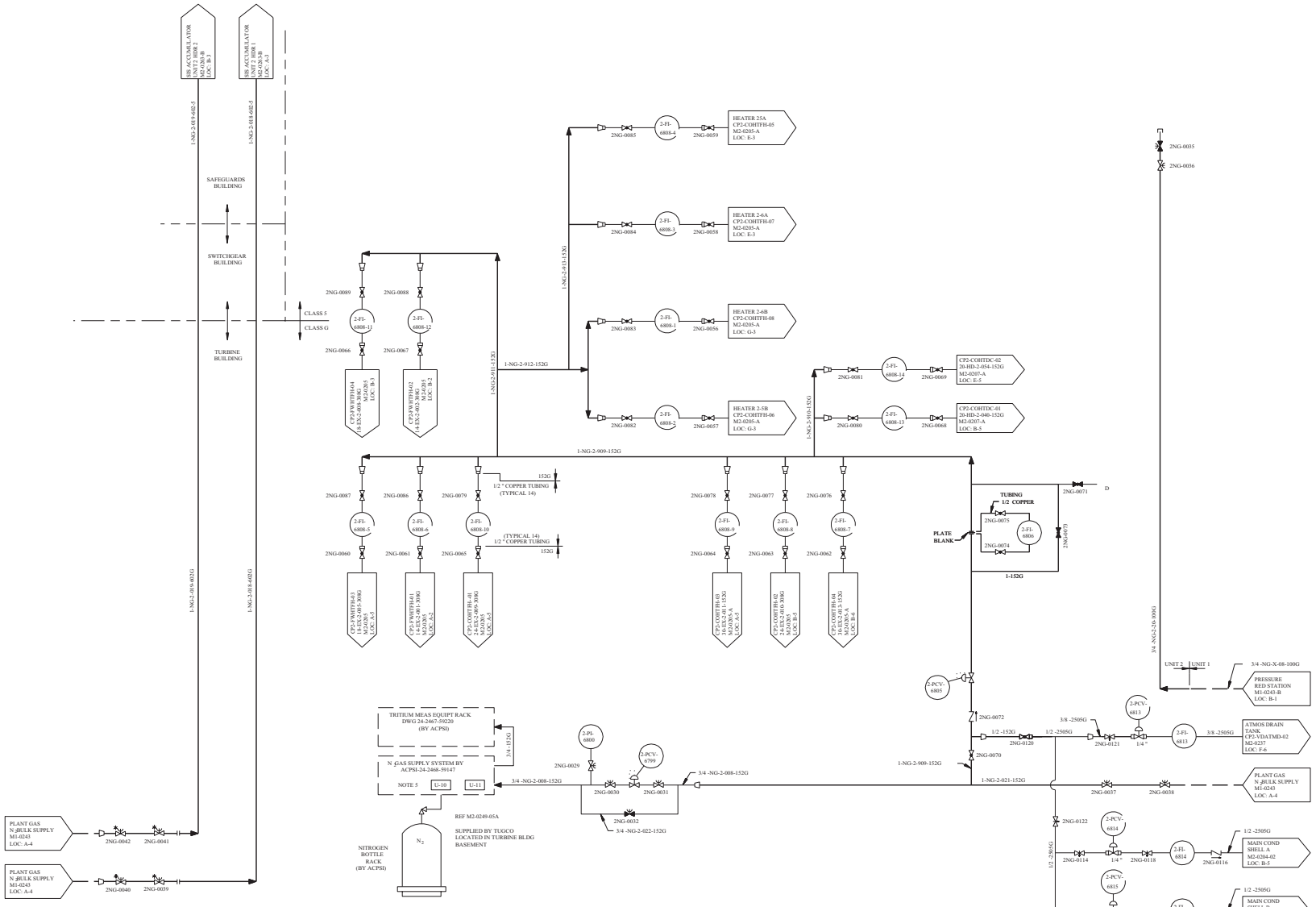

REV.	DWN	CHKD	APVD	REMARKS
CP-9	RME 05/24/96			THIS DRAWING REVISED TO ADD THE FSAR FIGURE NUMBER AS AN EDITORIAL CHANGE.

NOTES

1. ADDITIONAL N GAS CYLINDERS ACPSI COMPONENTS IS SHOWN ON DIAGRAM M1-0249-05A.
2. ——4N——INDICATES OUT-OF-SYSTEM LINE.
3. FOR MECHANICAL SYMBOLS AND NOTES SEE DWG M1-0200.
4. X-PT-1066 IS FURNISHED BY WESTINGHOUSE. LOCAL INDICATION AND A REMOTE INDICATOR ON THE GASEOUS WASTE PROCESSING PANEL IS PROVIDED.
5. MATCHING CONNECTIONS USED ARE 0.965" OD WITH 14 NGO-RN INTERNAL THREADS.
6. DELETED
7. 3/4 " NPT CAP.
8. INTERCONNECTING PIPING BETWEEN EQUIPMENT SHOWN ON AIR PRODUCTS AND CHEMICALS DRAWINGS IS SUPPLIED BY AIR PRODUCTS AND CHEMICALS BUT INSTALLATION ON THIS PIPING IS NOT IN THEIR SCOPE. REFER TO THE REFERENCED DRAWINGS AND CUSTOMER CONNECTION LIST FOR ASSEMBLY.
9. DELETED
10. DENOTES RADIOACTIVE WASTE MANAGEMENT SYSTEM CONTINUES ON IDENTIFIED DRAWING.
11. CRACK OPEN BLEED VALVE AND SHUT-OFF VALVES WITH BOTH BOTTLES FULL; SET REGULATOR 2-PCV-6809 TO 105 PSIG AND 2-PCV-6810 TO 100 PSIG. WHEN REGULATORS ARE SET, CLOSE BLEED VALVE. AFTER BOTTLE 1 IS DEPLETED, IDENTIFIED BY AN IDENTICAL PRESSURE READINGS ON THE THE HIGH PRESSURE AND OUTPUT GAGES ON VALVE 2-PCV-6809 CLOSE SHUT-OFF VALVE ON REGULATOR 2-PCV-6809 AND REMOVE DEPLETED BOTTLE 1. INSTALL A FRESH BOTTLE IN ITS PLACE, AND CRACK BLEED VALVE OPEN. READJUST REGULATOR 2-PCV-6809 TO 100 PSIG AND 2-PCV-6810 TO 105 PSIG; CLOSE BLEED VALVE. REVERSE PROCEDURE WHEN SUPPLY BOTTLE 2 IS DEPLETED.

CP-9

FSAR FIGURE 10.4-18

THIS DRAWING CREATED ELECTRONICALLY

DRAWING M1-0243 REV CP-12
HAS BEEN SPLIT INTO THE FOLLOWING SHEETS:
M1-0243
M1-0243-B
M2-0243

NON-SAFETY

TXU ELECTRIC
CPSES
GLEN ROSE, TEXAS

FLOW DIAGRAM
PLANT GAS SUPPLY SYSTEM
NITROGEN SUPPLY

DWG. NO.	SH. NO.	REV.
M2-0243	-	CP-9

SSSSSSSTA ITESSSSS

vs0000bp.dgn

REV	DWN	CHKD	APVD	REMARKS
CP-11	IRK 05-29 2012			THIS DRAWING REVISED TO EDITORIALLY CORRECT DRAFTING ERROR PER AI-CR-2012-005087-1. THIS ERROR OCCURRED WHEN THE UNIT 2 PORTIONS OF THE DRAWING WAS SPLIT FROM M1-0243-A REV CP-10 IN 6/27/1991. THE CONTINUATION BLOCK WAS NEVER VERIFIED TO THE CORRESPONDING FLOW DIAGRAM.

NOTES:

1. FOR MECHANICAL SYMBOLS AND NOTES SEE DWG M1-0200.
2. DENOTES RADIOACTIVE WASTE MANAGEMENT SYSTEM CONTINUES ON THE IDENTIFIED DRAWING.

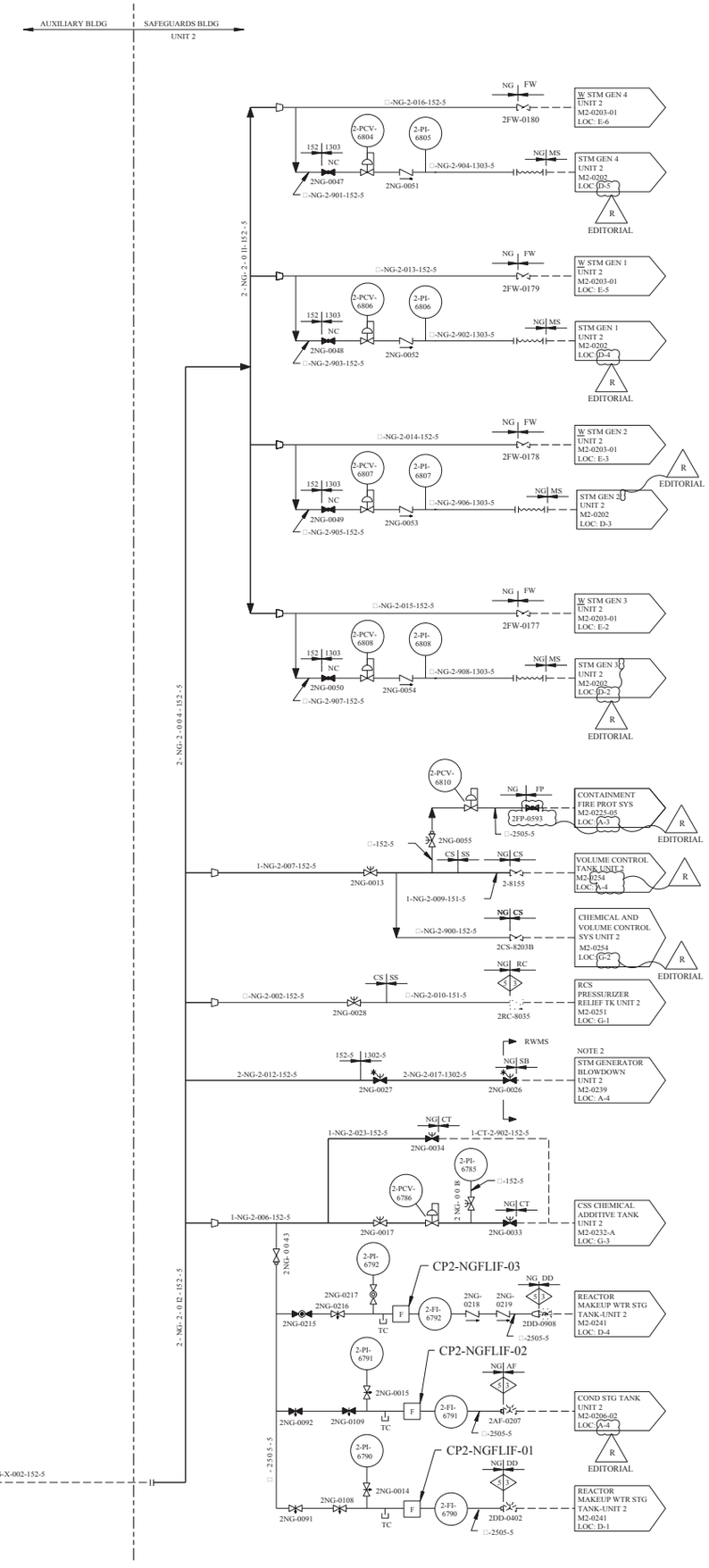

FSAR FIGURE 10.4-18

THIS DRAWING CREATED ELECTRONICALLY

DRAWING M1-0243-A REV CP-10
HAS BEEN SPLIT INTO THE FOLLOWING SHEETS:

M1-0243-A
M2-0243-A

CLASS II

LUMINANT
CPNPP
GLEN ROSE, TEXAS

FLOW DIAGRAM
PLANT GAS SUPPLY SYSTEM
NITROGEN SUPPLY

DWG. NO.	SH. NO.	REV.
M2-0243	A	CP-11

SSSSSSSDATESSSSSSS

REV	DWN	CHKD	APVD	REMARKS
CP-24	MBF 11-21-2016	GAW 11-21-2016		THIS DRAWING REVISED TO INCORPORATE DESIGN CHANGE FDA-2016-000155-01-00 PER SK-0001-16-000155-01-00.

NOTES:

1. SEE DWG M1-0249-05A FOR BACK-UP H2 BOTTLE SUPPLY WHICH IS NOT LOCATED IN PLANT GAS STORAGE AREA.
2. FOR MECHANICAL SYMBOLS AND NOTES SEE DWG M1-0200.
3. DELETED
4. CAPS WILL NOT BE PROVIDED ON VENTS AND DRAINS LINES.
5. PT-1065 IS FURNISHED BY WESTINGHOUSE. LOCAL INDICATION AND A REMOTE INDICATOR ON THE GASEOUS WASTE PROCESSING PANEL IS PROVIDED.
6. AIR PRODUCTS CONNECTION 1.□" OD
7. MANIFOLD CONNECTION IS THE STANDARD COMPRESSED GAS ASSOCIATION HEADER VALVE FITTING CGA350; MANIFOLD BY AIR PRODUCTS AND CHEMICALS.
8. DELETED
9. ARGON PURGE IS FOR GASEOUS STORAGE VESSELS ONLY.
10. PORTIONS OF THIS SYSTEM HAVE BEEN SEISMICALLY ANALYZED AND SUPPORTED SO THAT PIPING FAILURE DURING A SEISMIC EVENT WOULD NOT YIELD UNACCEPTABLE HYDROGEN CONCENTRATIONS IN SAFETY RELATED PLANT AREAS.
11. SPECTACLE FLANGE SHOWN IN THE OPEN POSITION.
12. 1HG-0010 IS AN APPROVED AND PROCEDURALIZED ALTERNATE HYDROGEN INJECTION POINT.

FSAR FIGURE 10.4-19

THIS DRAWING CREATED ELECTRONICALLY

DRAWING M1-0243-02 REV CP-10
HAS BEEN SPLIT INTO THE FOLLOWING SHEETS:
M1-0243-02
M2-0243-02

CLASS II

LUMINANT
CPNPP
GLEN ROSE, TEXAS

FLOW DIAGRAM
PLANT GAS SUPPLY SYSTEM
HYDROGEN SUPPLY

DWG. NO. M1-0243 | SH. NO. 02 | REV. CP-24

FINAL PRINT

me871300.dgn A M1-0243-02

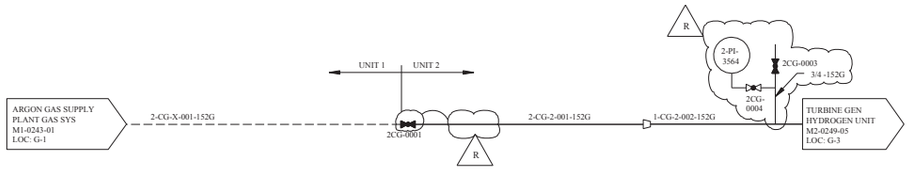

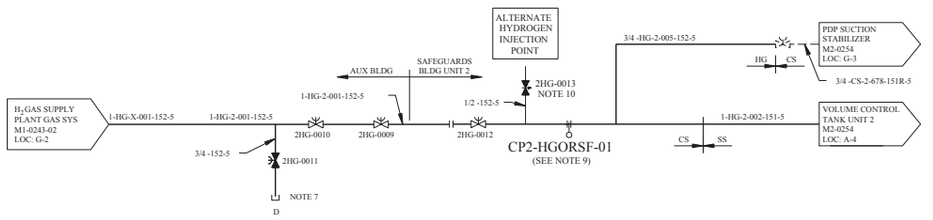

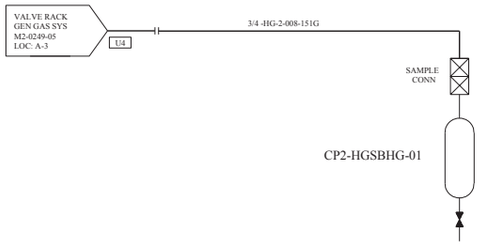

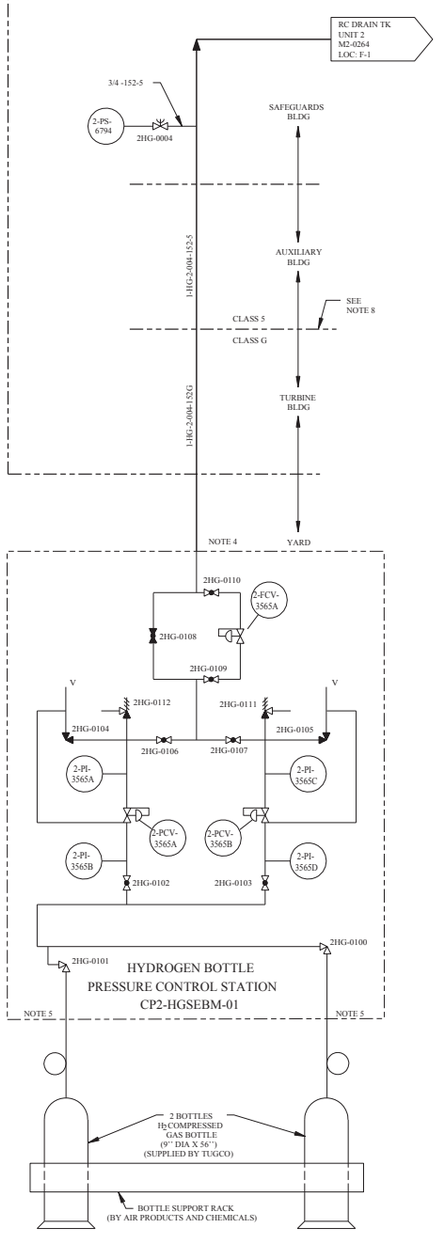

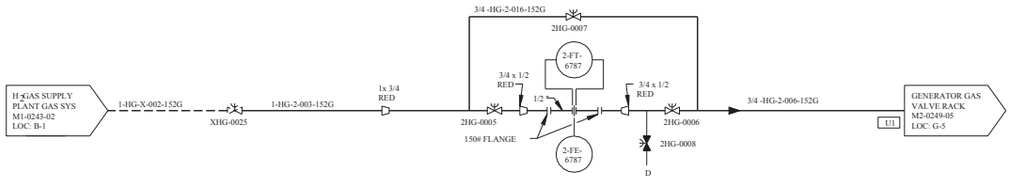

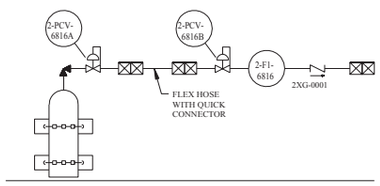

ARGON BOTTLE RACK
UNIT 2 SAFEGUARDS ROOM 2-078
ARGON INJECTION TO VOLUME CONTROL TANK
(REF M2-0228-A (G-4) AND NOTE 21)

REV	DWN	CHKD	APVD	REMARKS
CP-14	EES 05-20-2008	DLK 05-20-2008		THIS DRAWING REVISED TO INCORPORATE DESIGN CHANGE FDA-2001-001214-02-04 PER SK-0059-01-001214-02-00.

NOTES:

1. SEE DWG M2-0249-05A FOR BACK-UP H2 BOTTLE SUPPLY WHICH IS NOT LOCATED IN PLANT GAS STORAGE AREA.
2. FOR MECHANICAL SYMBOLS AND NOTES SEE DWG M1-0200.
3. DELETED
4. AIR PRODUCTS CONNECTION 1 1/8 " OD
5. MANIFOLD CONNECTION IS THE STANDARD COMPRESSED GAS ASSOCIATION HEADER VALVE FITTING CGA350; MANIFOLD BY AIR PRODUCTS AND CHEMICALS.
6. DELETED
7. 3/4 INCH NPT CAP.
8. PORTIONS OF THIS SYSTEM HAVE BEEN SEISMICALLY ANALYZED AND SUPPORTED SO THAT PIPING FAILURE DURING A SEISMIC EVENT WOULD NOT YIELD UNACCEPTABLE HYDROGEN CONCENTRATIONS IN SAFETY RELATED PLANT AREAS.
9. SPECTACLE FLANGE SHOWN IN THE OPEN POSITION.
10. 2HG-0013 IS AN APPROVED AND PROCEDURALIZED ALTERNATE HYDROGEN INJECTION POINT.

FSAR FIGURE 10.4-19

THIS DRAWING CREATED ELECTRONICALLY

DRAWING M1-0243-02 REV CP-10
HAS BEEN SPLIT INTO THE FOLLOWING SHEETS:
M1-0243-02
M2-0243-02

CLASS II

LUMINANT
CPNPP
GLEN ROSE, TEXAS

FLOW DIAGRAM
PLANT GAS SUPPLY SYSTEM
ARGON AND HYDROGEN SUPPLY

DWG. NO. M2-0243 | SH. NO. 02 | REV. CP-14

SSSSSSSDATESSSSSS

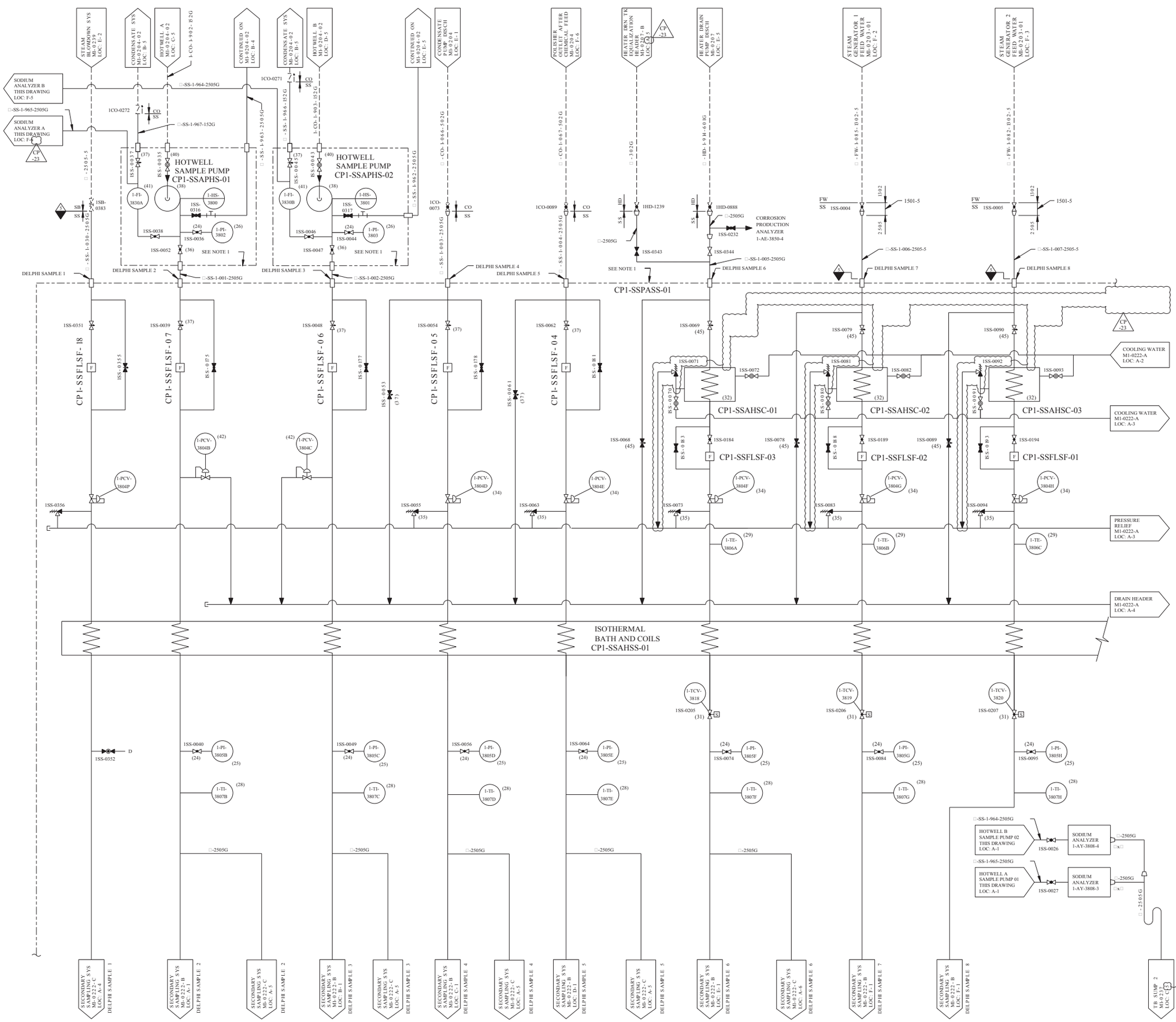

REV	DWN	CHKD	APVD	REMARKS
CP-23	DLK 10-02 2012			THIS DRAWING REVISED TO EDITORIALLY CORRECT THE OUTLET SAMPLE COOLERS CP1-SSAHSC-01 THRU -03 RELIEF VALVE LOCATIONS PER AI-CR-2012-009862-1. THESE CHANGES WILL BE IN AGREEMENT WITH VENDOR DWG 51011 OF TECH MANUAL CP-0155-001, FIELD WALK DOWN VERIFICATION AND WITH UNIT 2 FLOW DIAGRAM M2-0222 REV CP-21 WHICH WAS UPDATED PER APPROVED DESIGN DOCUMENT DCA 96500 REV 0. EDITORIALLY REVISED CONTINUATION BLOCKS.

NOTES:

1. ORIGINAL EQUIPMENT CP1-SSPASS-01 SAMPLE PANEL SUPPLIED BY DELPHI INDUSTRIES, EXCEPT FOR SAMPLE 1.
2. FOR MECHANICAL SYMBOLS AND NOTES SEE DRAWING M1-0200.
3. FOR NUMBERS SHOWN IN (XX) SEE BILL OF MATERIAL DELPHI DRAWING 19100 SH 1 THRU 5.
4. [XXXX] - REFERS TO DELPHI INSTRUMENT DESIGNATION ON ELECTRICAL DRAWING 019131 SH 1 THRU 18.
5. VALVES 1SS-0343 AND 1SS-0344 ARE □" WHITEY VALVES, MODEL SS-1RS6.

FSAR FIGURE 10.4-20

THIS DRAWING CREATED ELECTRONICALLY

DRAWING 2323-M1-0222 REV CP-6
HAS BEEN SPLIT INTO THE FOLLOWING SHEETS:
M1-0222
M1-0222-B

CLASS II

LUMINANT
CPNPP
GLEN ROSE, TEXAS

FLOW DIAGRAM
SECONDARY SAMPLING
SYSTEM

DWG. NO. M1-0222 | SH. NO. - | REV. CP-23

< FINAL PRINT >

REF CKD CP-23 10/3/12

$$$$$$$DATE$$$$$$

me572500.dgn M1-0222

REV	DWN	CHKD	APVD	REMARKS
CP-14	DLK 10-02-2012			THIS DRAWING REVISED TO EDITORIALLY CORRECT THE OUTLET SAMPLE COOLERS CP1-SSAHSC-04 THRU -09 RELIEF VALVE LOCATIONS PER AI-CR-2012-009862-1. THESE CHANGES WILL BE IN AGREEMENT WITH VENDOR DWG 51011 OF TECH MANUAL CP-0155-001, FIELD WALK DOWN VERIFICATION AND WITH UNIT 2 FLOW DIAGRAM M2-0222-01 REV CP-21 WHICH WAS UPDATED PER APPROVED DESIGN DOCUMENT DCA 56500 REV 0. EDITORIALLY REVISED CONTINUATION BLOCKS, LINE AND VALVE NUMBERS.

NOTES:

1. ORIGINAL EQUIPMENT CP1-SSPASS-01 SAMPLE PANEL SUPPLIED BY DELPHI INDUSTRIES.
2. FOR MECHANICAL SYMBOLS AND NOTES SEE DRAWING M1-0200.
3. FOR NUMBERS SHOWN IN (XX) SEE BILL OF MATERIAL DELPHI DRAWING 19100 SH 1 THRU 5.
4. [XXXX] - REFERS TO DELPHI INSTRUMENT DESIGNATION ON ELECTRICAL DRAWING 019131 SH 1 THRU 18.

MAIN FEED AFTER HIGH PRESS FEED WATER HTRS MI-0203 LOC: E-1

MAIN STEAM AFTER TRBN MI-0202-01A LOC: G-5

CONDENSATE SYSTEM MI-0204-03 LOC: G-3

CP1-SSMSDC-01

CP1-SSMSDC-02

1MS-0689

MS SS

1FW-0375

1SS-0319

CP -14

FW SS

□-SS-1-957-2505G

□-SS-1-958-2505G

□"-SS-1-959-2505G

□-SS-1-008-2505G

□-SS-1-009-2505G

□-SS-1-010-2505G

□-SS-1-011-2505G

□-SS-1-012-2505G

□-SS-1-013-2505G

MAIN STEAM 1 MI-0202 LOC: G-4

MAIN STEAM 2 MI-0202 LOC: G-3

MAIN STEAM 3 MI-0202 LOC: G-2

MAIN STEAM 4 MI-0202 LOC: G-5

1MS-0028

1MS-0065

1MS-0291

1MS-0136

DELPHI SAMPLE 9

DELPHI SAMPLE 10

DELPHI SAMPLE 11

DELPHI SAMPLE 12

DELPHI SAMPLE 13

DELPHI SAMPLE 14

SEE NOTE 1

CP1-SSPASS-01

COOLING WATER M1-0222 LOC: G-3

PRESSURE RELIEF M1-0222 LOC: G-4

DRAIN HEADER M1-0222 LOC: G-4

ISS-0100 (45)

ISS-0102 (45)

ISS-0103

ISS-0104

CP1-SSAHSC-04

ISS-0098

ISS-0099

F

CP1-SSFLSF-09

1-PCV-3804L (34)

1SS-0105 (35)

1-TE-3806D (29)

ISS-0112 (45)

ISS-0110 (45)

ISS-0114

ISS-0115

CP1-SSAHSC-05

ISS-0203

ISS-0204

CP1-SSFLSF-08

1-PCV-3804J (34)

1SS-0116 (35)

1-TE-3806E (29)

ISS-0123 (45)

ISS-0124

ISS-0125

ISS-0126

CP1-SSAHSC-06

ISS-0122 (45)

1-PCV-3804K (34)

1SS-0127 (35)

1-TE-3806F (29)

1SS-0136

ISS-0134 (45)

ISS-0135

CP1-SSAHSC-07

ISS-0133 (45)

1-PCV-3804L (34)

1SS-0138 (35)

1-TE-3806G (29)

ISS-0145

ISS-0146

ISS-0147

CP1-SSAHSC-08

ISS-0144 (45)

1-PCV-3804M (34)

1SS-0148 (35)

1-TE-3806H (29)

PRIMARY COOLER SAFETY VALVE (TYP)

ISS-0154 (45)

ISS-0155

ISS-0156

ISS-0157

CP1-SSAHSC-09 SAMPLE COOLER (TYP)

ISS-0143 (45)

1-PCV-3804N (34)

1SS-0158 (35)

1-TE-3806I (29)

1-TI-3817

1-TE-3817 (51)

1-TV-3817 (51)

ISS-0153 (45)

ISS-0152 (45)

ISS-0151 (45)

ISS-0150 (45)

ISS-0149 (45)

ISS-0148 (45)

ISS-0147 (45)

ISS-0146 (45)

ISS-0145 (45)

ISS-0144 (45)

ISS-0143 (45)

ISS-0142 (45)

ISS-0141 (45)

ISS-0140 (45)

ISS-0139 (45)

ISS-0138 (45)

ISS-0137 (45)

ISS-0136 (45)

ISS-0135 (45)

ISS-0134 (45)

ISS-0133 (45)

ISS-0132 (45)

ISS-0131 (45)

ISS-0130 (45)

ISS-0129 (45)

ISS-0128 (45)

ISS-0127 (45)

ISS-0126 (45)

ISS-0125 (45)

ISS-0124 (45)

ISS-0123 (45)

ISS-0122 (45)

ISS-0121 (45)

ISS-0120 (45)

ISS-0119 (45)

ISS-0118 (45)

ISS-0117 (45)

ISS-0116 (45)

ISS-0115 (45)

ISS-0114 (45)

ISS-0113 (45)

ISS-0112 (45)

ISS-0111 (45)

ISS-0110 (45)

ISS-0109 (45)

ISS-0108 (45)

ISS-0107 (45)

ISS-0106 (45)

ISS-0105 (45)

ISS-0104 (45)

ISS-0103 (45)

ISS-0102 (45)

ISS-0101 (45)

ISS-0100 (45)

ISS-0099 (45)

ISS-0098 (45)

ISS-0097 (45)

ISS-0096 (45)

ISS-0095 (45)

ISS-0094 (45)

ISS-0093 (45)

ISS-0092 (45)

ISS-0091 (45)

ISS-0090 (45)

ISS-0089 (45)

ISS-0088 (45)

ISS-0087 (45)

ISS-0086 (45)

ISS-0085 (45)

ISS-0084 (45)

ISS-0083 (45)

ISS-0082 (45)

ISS-0081 (45)

ISS-0080 (45)

ISS-0079 (45)

ISS-0078 (45)

ISS-0077 (45)

ISS-0076 (45)

ISS-0075 (45)

ISS-0074 (45)

ISS-0073 (45)

ISS-0072 (45)

ISS-0071 (45)

ISS-0070 (45)

ISS-0069 (45)

ISS-0068 (45)

ISS-0067 (45)

ISS-0066 (45)

ISS-0065 (45)

ISS-0064 (45)

ISS-0063 (45)

ISS-0062 (45)

ISS-0061 (45)

ISS-0060 (45)

ISS-0059 (45)

ISS-0058 (45)

ISS-0057 (45)

ISS-0056 (45)

ISS-0055 (45)

ISS-0054 (45)

ISS-0053 (45)

ISS-0052 (45)

ISS-0051 (45)

ISS-0050 (45)

ISS-0049 (45)

ISS-0048 (45)

ISS-0047 (45)

ISS-0046 (45)

ISS-0045 (45)

ISS-0044 (45)

ISS-0043 (45)

ISS-0042 (45)

ISS-0041 (45)

ISS-0040 (45)

ISS-0039 (45)

ISS-0038 (45)

ISS-0037 (45)

ISS-0036 (45)

ISS-0035 (45)

ISS-0034 (45)

ISS-0033 (45)

ISS-0032 (45)

ISS-0031 (45)

ISS-0030 (45)

ISS-0029 (45)

ISS-0028 (45)

ISS-0027 (45)

ISS-0026 (45)

ISS-0025 (45)

ISS-0024 (45)

ISS-0023 (45)

ISS-0022 (45)

ISS-0021 (45)

ISS-0020 (45)

ISS-0019 (45)

ISS-0018 (45)

ISS-0017 (45)

ISS-0016 (45)

ISS-0015 (45)

ISS-0014 (45)

ISS-0013 (45)

ISS-0012 (45)

ISS-0011 (45)

ISS-0010 (45)

ISS-0009 (45)

ISS-0008 (45)

ISS-0007 (45)

ISS-0006 (45)

ISS-0005 (45)

ISS-0004 (45)

ISS-0003 (45)

ISS-0002 (45)

ISS-0001 (45)

ISOTHERMAL BATH AND COILS CP1-SSAHSS-01

1-TCV-3821 (31)

1-TCV-3822 (31)

1-TCV-3823 (31)

1-TCV-3825 (31)

1-TCV-3828 (31)

1-TCV-3829 (31)

HIGH TEMP SOLENOID SHUTOFF VALVE (FC) (TYP)

ISS-0208

ISS-0209

ISS-0210

ISS-0211

ISS-0212

ISS-0213 (31)

1SS-0106 (24)

1SS-0117 (24)

1SS-0128 (24)

1SS-0139 (24)

1SS-0149 (24)

1SS-0159 (24)

1-PI-3805I (25)

1-PI-3805J (25)

1-PI-3805K (25)

1-PI-3805L (25)

1-PI-3805M (25)

1-PI-3805N (25)

1-TI-3807I (28)

1-TI-3807J (28)

1-TI-3807K (28)

1-TI-3807L (28)

1-TI-3807M (28)

1-TI-3807N (28)

□-2505G

SECONDARY SAMPLING SYS M1-0222-C LOC: B-1 DELPHI SAMPLE 9

SECONDARY SAMPLING SYS M1-0222-C LOC: A-6 DELPHI SAMPLE 9

SECONDARY SAMPLING SYS M1-0222-C LOC: C-1 DELPHI SAMPLE 10

SECONDARY SAMPLING SYS M1-0222-C LOC: A-6 DELPHI SAMPLE 10

SECONDARY SAMPLING SYS M1-0222-C LOC: D-1 DELPHI SAMPLE 11

SECONDARY SAMPLING SYS M1-0222-C LOC: E-1 DELPHI SAMPLE 12

SECONDARY SAMPLING SYS M1-0222-C LOC: F-1 DELPHI SAMPLE 13

SECONDARY SAMPLING SYS M1-0222-C LOC: F-1 DELPHI SAMPLE 14

DELPHI SAMPLE 22

1SS-0163 (79)

1SS-0012

2-SS-1-014-152G

2-TW-1-011-152-5

TURBINE PLANT COOLING WATER SYSTEM M1-0212-B LOC: D-2

DELPHI SAMPLE 21

1SS-0165 (79)

1SS-0166 (80)

1SS-0167 (79)

1SS-0013

2-SS-1-015-152G

2-TW-1-029-152-5

TURBINE PLANT COOLING WATER SYSTEM M1-0212-B LOC: D-4

DELPHI SAMPLE 18

1□-152G

1SS-0172 (47)

1□"x2" RED

1SS-0014 (46)

1□"x1" RED

2-SS-2-016-152-5

UNIT 2 SYS M2-0222-01 LOC: G-3

2-SS-1-016-152-5

PLANT CHILLED WATER SYS M1-0307 LOC: F-1

1-152G

1SS-0025

□x1

CP1-SSRCOR-01 (46)

CP1-SSAPCW-01

1SS-0023

1-152G

1□-152G

DELPHI SAMPLE 17

2-SS-1-017-152-5

1SS-0170

1SS-0015

1SS-0018

PLANT CHILLED WATER SYS M1-0307 LOC: F-1

1□"x1" RED

1□"x2" RED

2-SS-2-017-152-5

UNIT 2 SYS M2-0222-01 LOC: G-4

DELPHI SAMPLE 20

2-SS-1-022-152-5

1-SS-1-029-152-5

VENTS AND DRAINS SYS M1-0236-01A LOC: A-6

2-SS-1-024-152-5

VENTS AND DRAINS SYS M1-0236-01A LOC: A-6

2-SS-1-018-152-5

SECONDARY SAMPLING SYS M1-0222-C LOC: G-4

RELIEF HEADER

BLOW DOWN HEADER

FSAR FIGURE 10.4-20

THIS DRAWING CREATED ELECTRONICALLY

DRAWING ECE-M1-0222-A REV CP-1

HAS BEEN SPLIT INTO THE FOLLOWING SHEETS:

M1-0222-A

M1-0222-C

CLASS II

LUMINANT
CPNPP
GLEN ROSE, TEXAS

FLOW DIAGRAM
SECONDARY SAMPLING
SYSTEM

DWG. NO. M1-0222 | SH. NO. A | REV. CP-14

< FINAL PRINT >

$$$$$$$DATE$$$$$$$ REF CKD CP-14 10/3/12

me587800.dgn A M1-0222-A

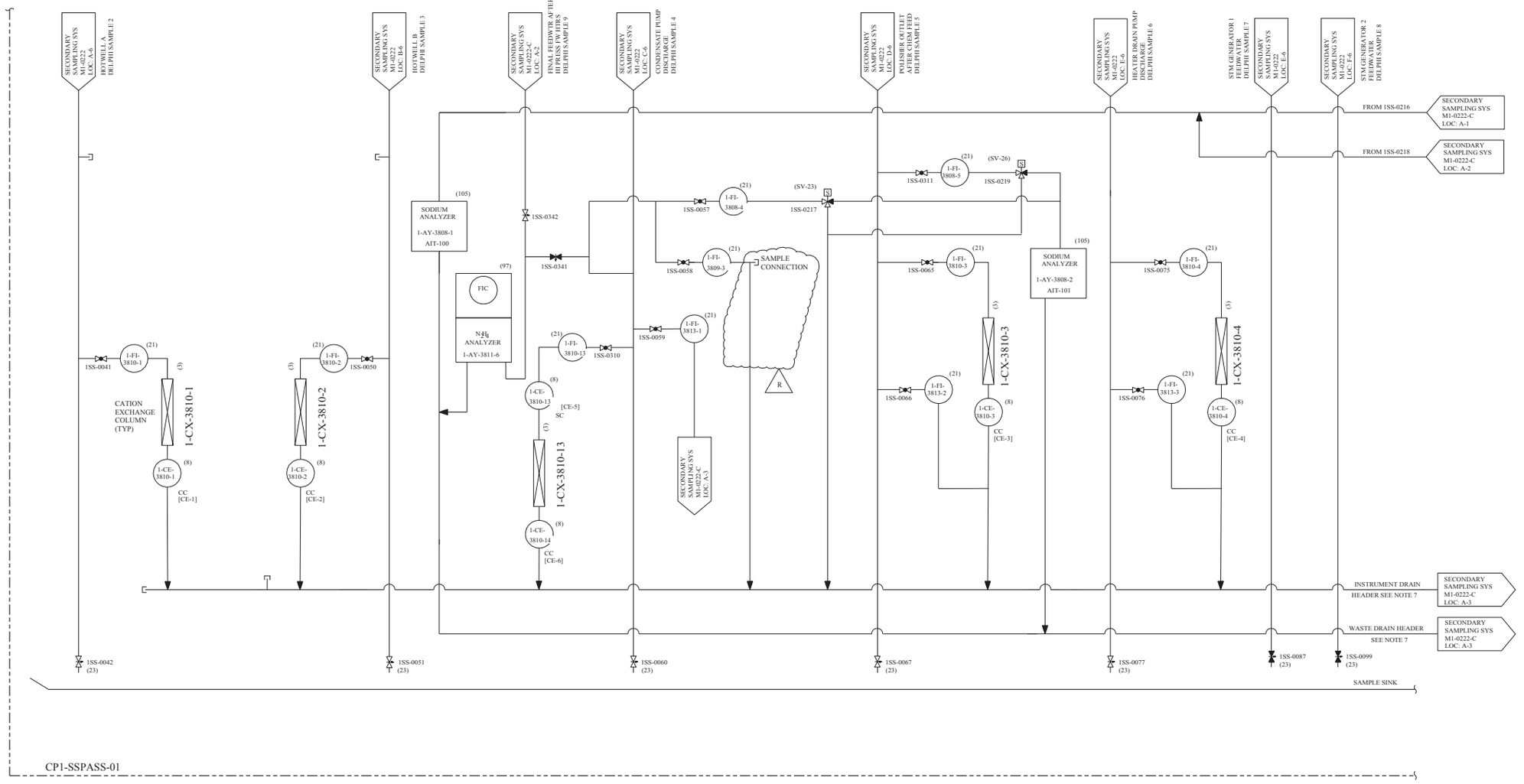

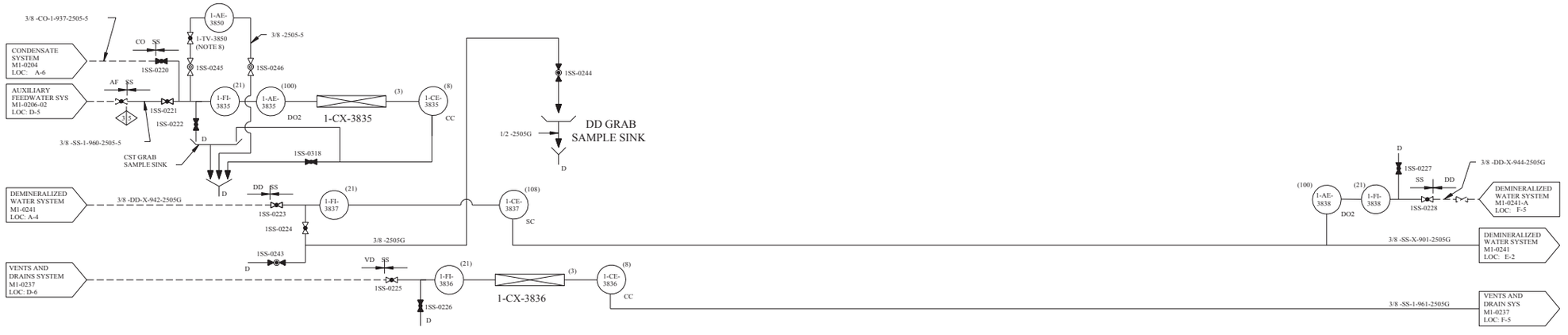

REV	DWN	CHKD	APVD	REMARKS
CP-16	JRMC 07-21 2009	DJL 07-21 2009		THIS DRAWING REVISED TO INCORPORATE DESIGN CHANGE FDA 2003-000239-02-02 PER SK-0019-03-000239-02-00.

NOTES:

1. ORIGINAL EQUIPMENT CP1-SSPASS-01 SAMPLE PANEL SUPPLIED BY DELPHI INDUSTRIES.
2. FOR MECHANICAL SYMBOLS AND NOTES SEE DRAWING M1-0200.
3. DELETED
4. FOR NUMBERS SHOWN IN (XX) SEE BILL OF MATERIAL DELPHI DRAWING 19100 SH 1 THRU 5.
5. ABREVIATIONS:
   - CC - CATION CONDUCTIVITY
   - SC - SPECIFIC CONDUCTIVITY
   - pH - PH
   - DO_2 - DISSOLVED OXYGEN
   - CL - CHLORIDE
   - Na - SODIUM
6. [XXXX] - REFERS TO DELPHI INSTRUMENT DESIGNATION ON ELECTRICAL DRAWING 019131 SH 1 THRU 18.
7. ROUTING OF SAMPLE PANEL DRAINS TO THE SAMPLE SINK OR TO THE DRAIN HEADERS AS SHOWN HERE MAY NOT REFLECT ACTUAL PLANT CONFIGURATION.
8. THERMAL SHUT-OFF VALVE BY SENTRY EQUIPMENT CORPORATION.

FSAR FIGURE 10.4-20

THIS DRAWING CREATED ELECTRONICALLY

DRAWING 2323-M1-0222 REV CP-6
HAS BEEN SPLIT INTO THE FOLLOWING SHEETS:
M1-0222
M1-0222-B

CLASS II

LUMINANT
CPNPP
GLEN ROSE, TEXAS

FLOW DIAGRAM
SECONDARY SAMPLING
SYSTEM

DWG. NO.	SH. NO.	REV.
M1-0222	B	CP-16

REF CKD CP-9 4/30/98

$$$$$$$DATE$$$$$$$

me932700.dgn A M1-0222-B B C D E F G < FINAL PRINT > H

REV	DWN	CHKD	APVD	REMARKS
CP-22	JRMC 07-21 2009	DJL 07-21 2009		THIS DRAWING REVISED TO INCORPORATE DESIGN CHANGE FDA-2003-000239-02-02 PER SK-0015-03-000239-02-00.

NOTES:

1. ORIGINAL EQUIPMENT CP1-SSPASS-01 SAMPLE PANEL SUPPLIED BY DELPHI INDUSTRIES.
2. DELETED
3. FOR MECHANICAL SYMBOLS AND NOTES SEE DRAWING M1-0200.
4. FOR NUMBERS SHOWN IN (XX) SEE BILL OF MATERIAL DELPHI DRAWING 19100 SH 1 THRU 5.
5. ABBREVIATIONS:
   - CC - CATION CONDUCTIVITY
   - SC - SPECIFIC CONDUCTIVITY
   - pH - PH
   - DO ≠ DISSOLVED OXYGEN
   - CL - CHLORIDE
   - Na - SODIUM
6. [XXXX] - REFERS TO DELPHI INSTRUMENT DESIGNATION ON ELECTRICAL DRAWING 019131 SH 1 THRU 18.
7. ROUTING OF SAMPLE PANEL DRAINS TO THE SAMPLE SINK OR TO THE DRAIN HEADERS AS SHOWN HERE MAY NOT REFLECT ACTUAL PLANT CONFIGURATION.

FSAR FIGURE 10.4-20

THIS DRAWING CREATED ELECTRONICALLY

DRAWING ECE-M1-0222-A REV CP-1
HAS BEEN SPLIT INTO THE FOLLOWING SHEETS:
- M1-0222-A
- M1-0222-C

NON-SAFETY

LUMINANT
CPNPP
GLEN ROSE, TEXAS

FLOW DIAGRAM
SECONDARY SAMPLING
SYSTEM

DWG NO. M1-0222 | SH NO. C | REV. CP-22

REF CKD CP-11 1/8/97

$$$$$$$DATE$$$$$$

me932500.dgn

< FINAL PRINT >

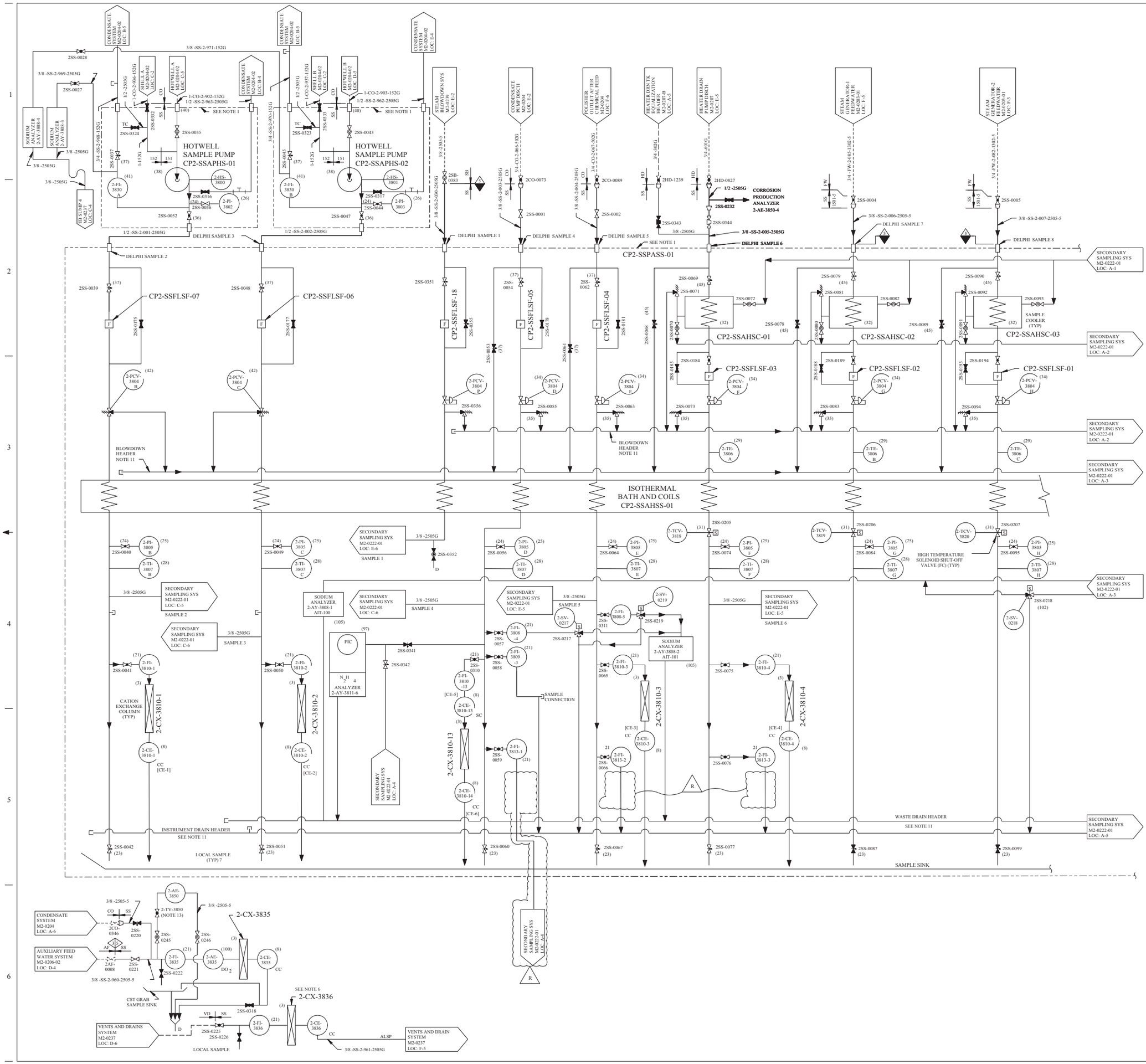

REV	DWN	CHKD	APVD	REMARKS
CP-21	SM 09-17 2009	JRMC 09-17 2009		THIS DRAWING REVISED TO INCORPORATE DESIGN CHANGE FDA 2003-001127-01-00 PER SK-0031-03-001127-01-00.

NOTES:

1. ALL EQUIPMENT WITHIN LINE SUPPLIED BY DELPHI INDUSTRIES.
2. FOR MECHANICAL SYMBOLS AND NOTES SEE DRAWING M1-0200.
3. FOR NUMBERS SHOWN IN (XX) SEE BILL OF MATERIAL DELPHI DWG 19100 SHT 1 THRU 5.
4. SIGNAL TO Na + ANALYZERS SOLENOID.
5. DELETED
6. ABBREVIATIONS:
   CC - CATION CONDUCTIVITY
   SC - SPECIFIC CONDUCTIVITY
   PH - PH
   DO - DISSOLVED OXYGEN
   C - CHLORIDE
   CLSP - CONDENSATE STORAGE TANK SAMPLE PANEL
   ALSP - ATMOSPHERIC DRAIN TANK LOCAL SAMPLE PANEL
7. [XXXX]- REFERS TO DELPHI INSTRUMENT DESIGNATIONS ON ELECTRICAL DWGS.
8. DELPHI DRAWING 19120 SHEETS 1, 2, AND 3 FOR REFERENCE ONLY.
9. FOR PNEUMATIC CONTROL LOGIC SEE ICD'S M2-2222-01.
10. FLOW INDICATED AT ALL TEST CONNECTIONS, VENTS AND DRAINS SHOULD BE DIRECTED AWAY FROM THE PROCESS PIPING.
11. ROUTING OF SAMPLE PANEL DRAINS TO THE SAMPLE SINK OR TO THE DRAIN HEADERS AS SHOWN HERE MAY NOT REFLECT ACTUAL PLANT CONFIGURATION.
12. VALVES 2SS-0343 AND 2SS-0344 ARE 3/8 " WHITEY VALVES, MODEL SS-1RS6.
13. THERMAL SHUT-OFF VALVE BY SENTRY EQUIPMENT CORPORATION.

FSAR FIGURE 10.4-20

THIS DRAWING CREATED ELECTRONICALLY

DRAWING	2323-M2-0222 TNE-M2-0222-01	REV	CP-2 CP-2
HAVE BEEN REDRAWN INTO THE FOLLOWING:			
M2-0222			
M2-0222-01			

CLASS II

LUMINANT
CPNPP
GLEN ROSE, TEXAS

FLOW DIAGRAM
SECONDARY SAMPLING
SYSTEM

DWG. NO.	SH. NO.	REV.
M2-0222	-	CP-21

< FINAL PRINT >

me939400.dgn M2-0222

REV	DWN	CHKD	APVD	REMARKS
CP-22	JRMC 09-09 2014	DJL 09-09 2014		THIS DRAWING REVISED TO INCORPORATE DESIGN CHANGE FDA-2014-000192-01-00 PER SK-0001-14-000192-01-00.

NOTES:

1. ALL EQUIPMENT WITHIN LINE SUPPLIED BY DELPHI INDUSTRIES.
2. FOR MECHANICAL SYMBOLS & NOTES SEE DWG M1-0200.
3. FOR NUMBERS SHOWN IN (XX) SEE BILL OF MATERIAL DELPHI DWG 19100 SHT 1-5.
4. SIGNAL TO Na + ANALYZERS SOLENOID.
5. DELETED
6. ABBREVIATIONS:
   CC - CATION CONDUCTIVITY
   SC - SPECIFIC CONDUCTIVITY
   PH - PH
   DO - DISSOLVED OXYGEN
   C - CHLORIDE
7. [XXXX]- REFERS TO DELPHI INSTRUMENT DESIGNATIONS ON ELECTRICAL DWGS.
8. DELPHI DRAWING 19120 SHEETS 1, 2, AND 3 FOR REFERENCE ONLY.
9. FOR PNEUMATIC CONTROL LOGIC SEE ICD'S M2-2222-01.
10. ROUTING OF SAMPLE PANEL DRAINS TO THE SAMPLE SINK OR TO THE DRAIN HEADERS AS SHOWN HERE MAY NOT REFLECT ACTUAL PLANT CONFIGURATION.

2323-M2-0222	REV CP-2
DRAWING TNE-M2-0222-01	REV CP-2
HAVE REDRAWN INTO THE FOLLOWING:	
M2-0222	REV CP-3
M2-0222-01	REV CP-3

FSAR FIGURE 10.4-20

THIS DRAWING CREATED ELECTRONICALLY

CLASS II

LUMINANT
CPNPP
GLEN ROSE, TEXAS

FLOW DIAGRAM
SECONDARY SAMPLING
SYSTEM

DWG. NO.	SH. NO.	REV.
M2-0222	01	CP-22

< FINAL PRINT >

SSSSSSSDATESSSSSS REF CKD CP II 2-96

me939500.dgn A M2-0222-01 B C D E F G H

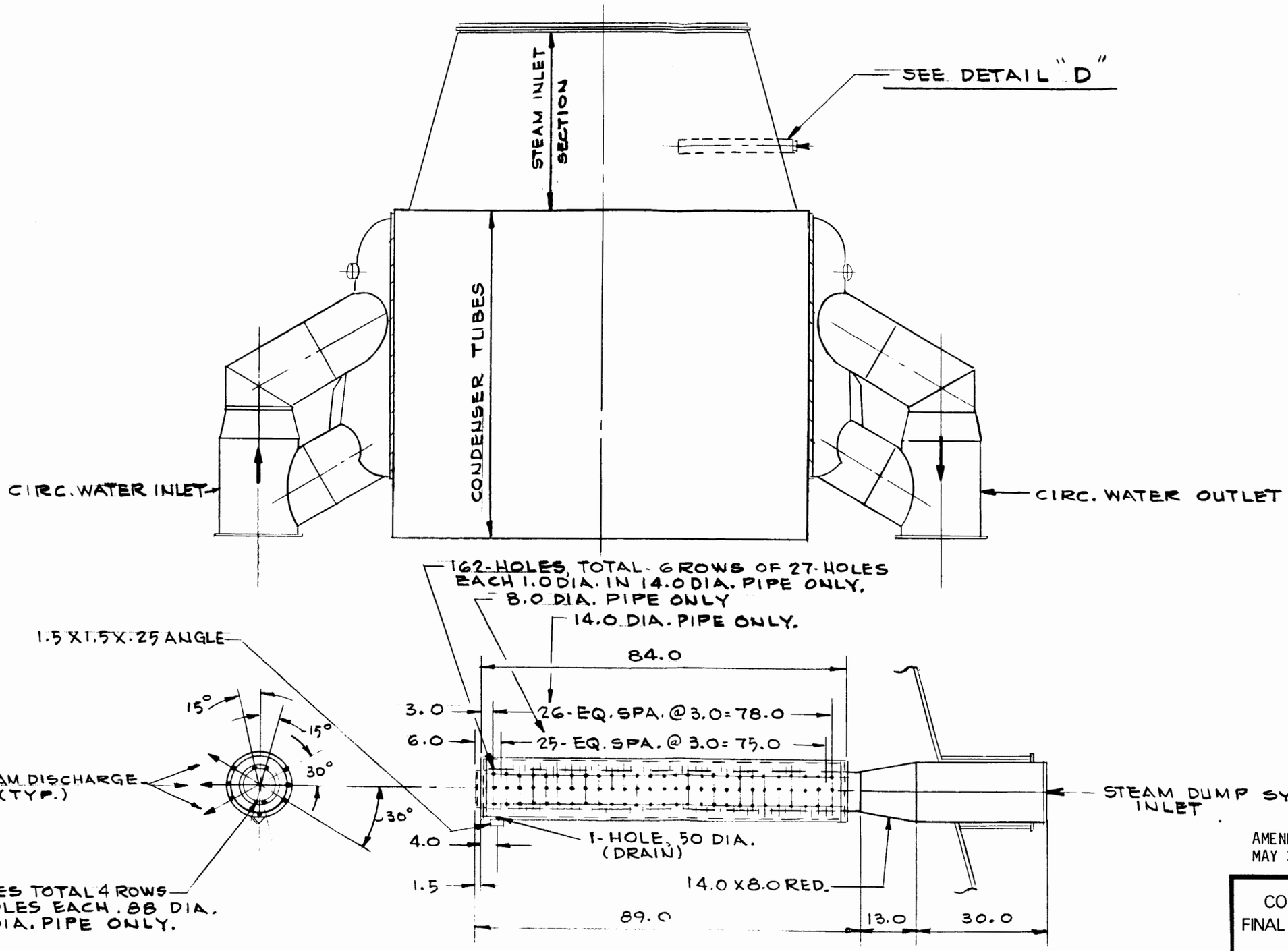

DETAIL "D"

AMENDMENT 6
MAY 31, 1979

COMANCHE PEAK S.E.S.
FINAL SAFETY ANALYSIS REPORT
UNITS 1 and 2

Steam Dump System
Discharge Into Condenser

FIGURE 10.4-21

S/78

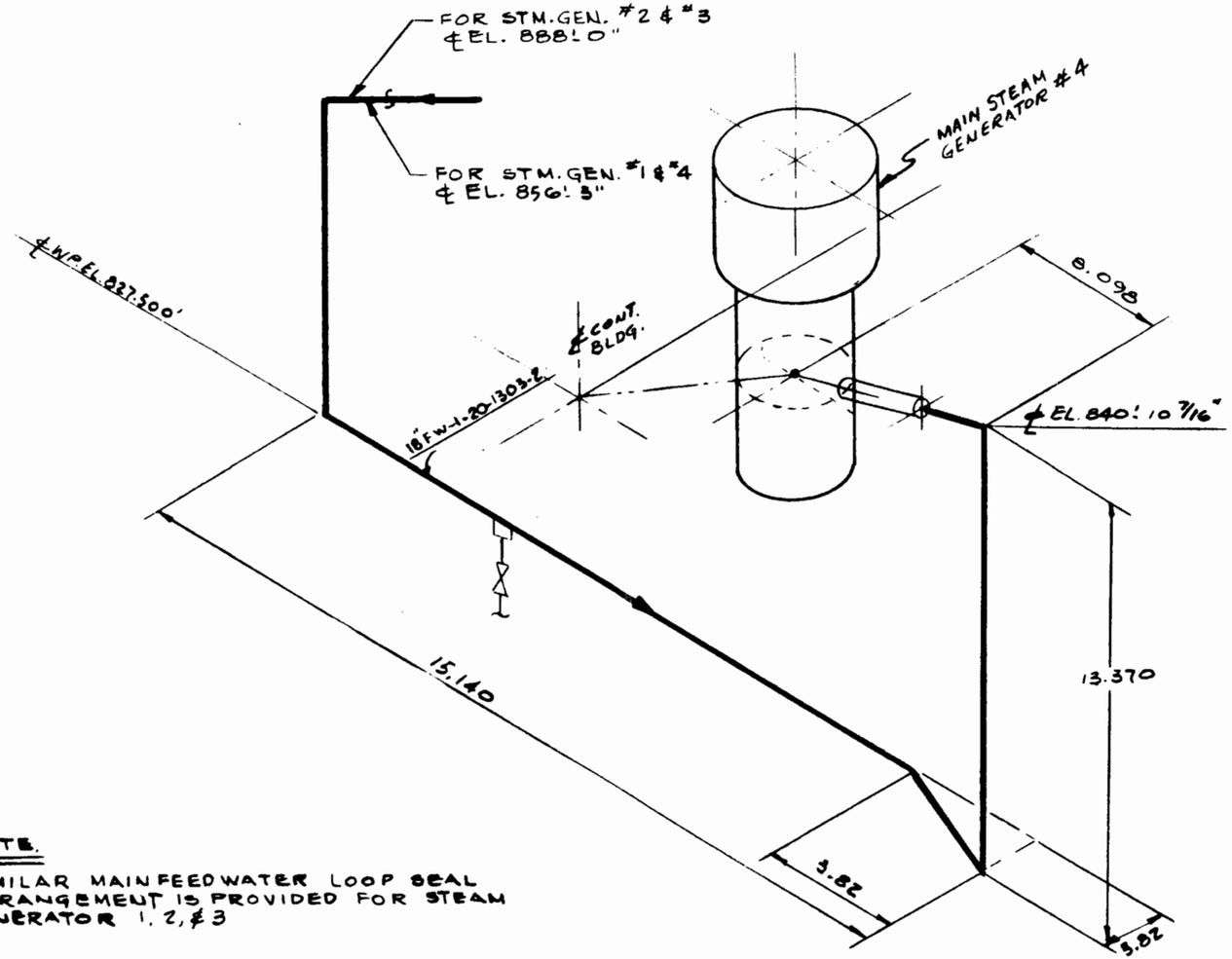

NOTE.

SIMILAR MAIN FEEDWATER LOOP SEAL ARRANGEMENT IS PROVIDED FOR STEAM GENERATOR 1, 2, & 3

AMENDMENT 10
MARCH 31, 1980

COMANCHE PEAK S.E.S.
FINAL SAFETY ANALYSIS REPORT
UNITS 1 and 2

MAIN FEEDWATER
LOOP SEAL ARRANGEMENT

FIGURE 10.4-22

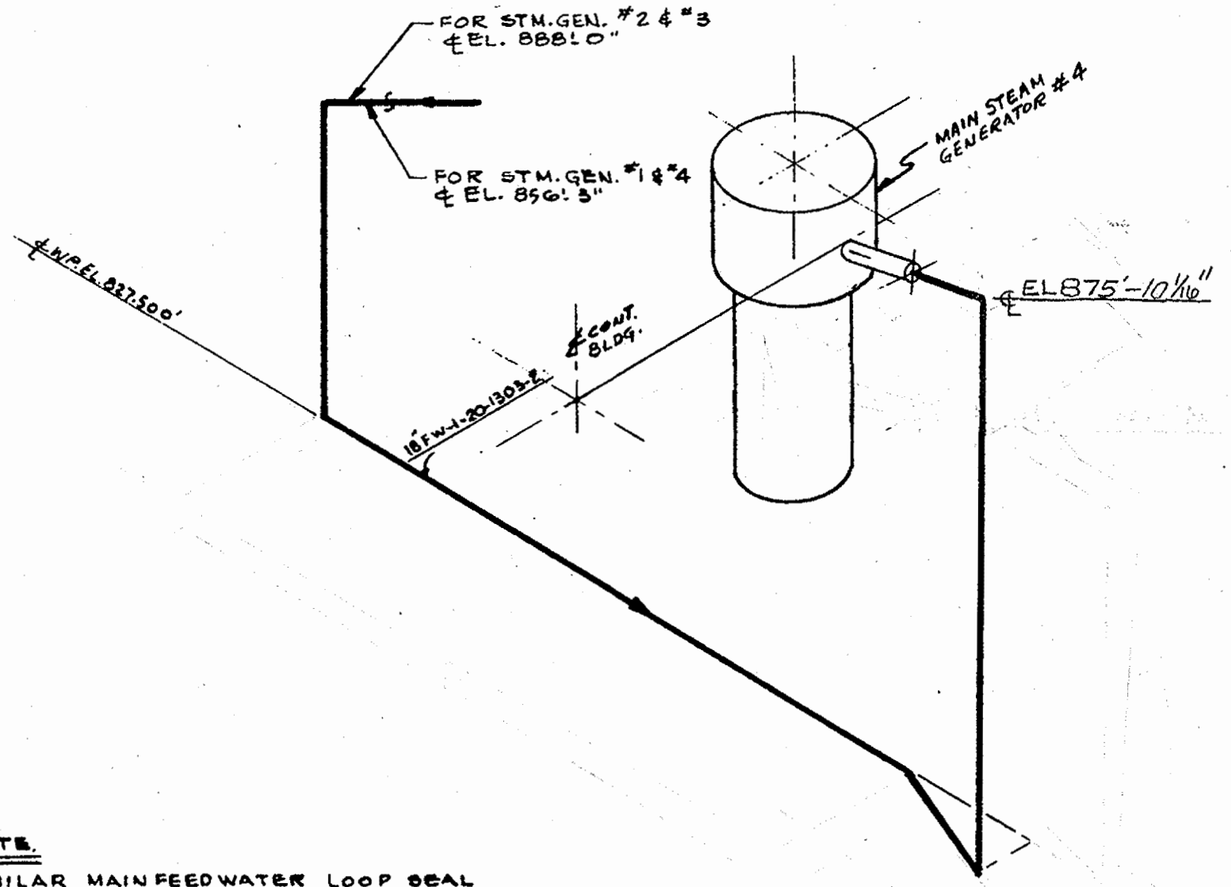

NOTE.

SIMILAR MAIN FEEDWATER LOOP SEAL ARRANGEMENT IS PROVIDED FOR STEAM GENERATOR 1, 2, & 3

Amendment 102

COMANCHE PEAK S.E.S.
FINAL SAFETY ANALYSIS REPORT
UNIT 1

MAIN FEEDWATER
LOOP SEAL ARRANGEMENT

FIGURE 10.4-22A

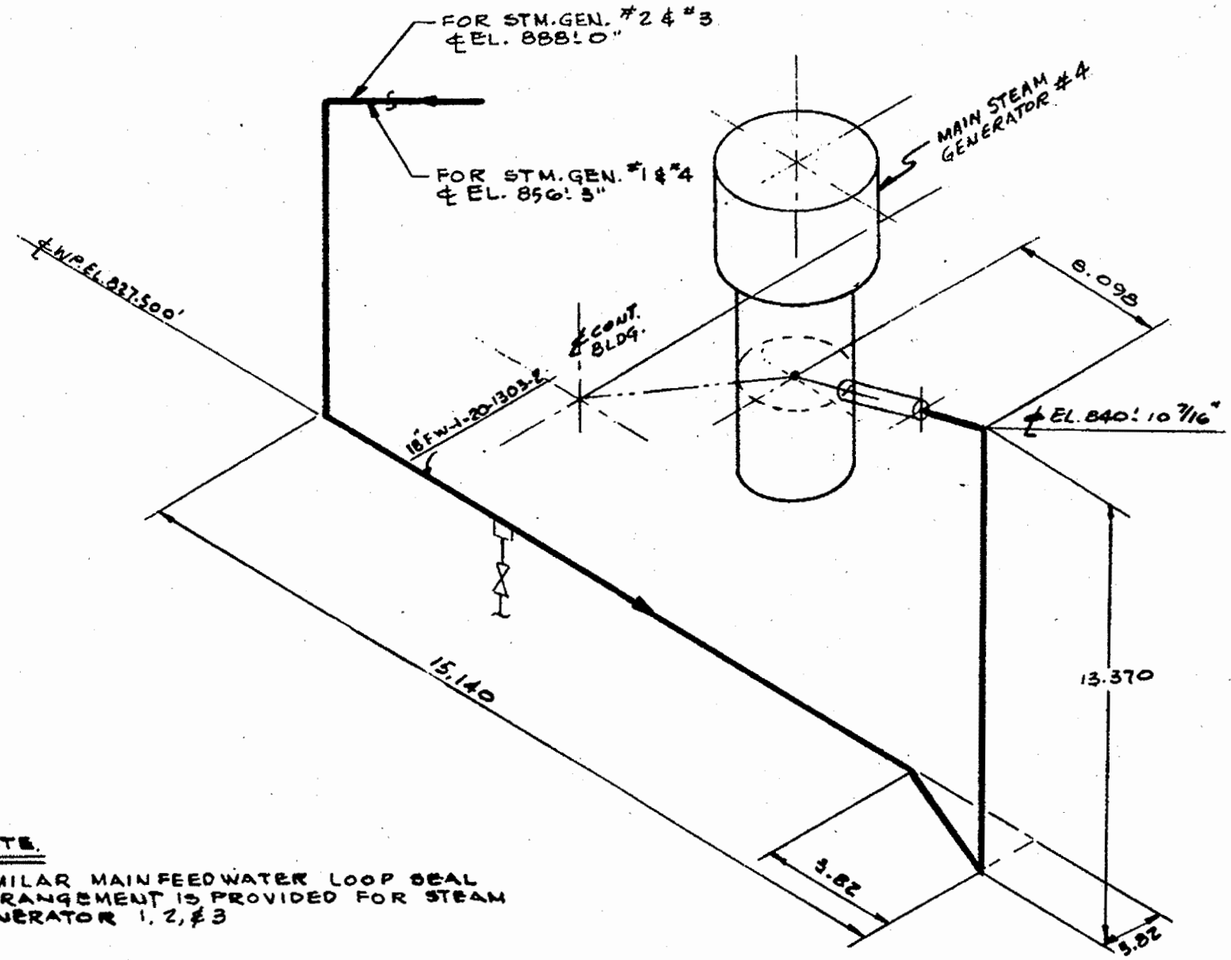

NOTE.

SIMILAR MAIN FEEDWATER LOOP SEAL ARRANGEMENT IS PROVIDED FOR STEAM GENERATOR 1, 2, & 3

Amendment 102

COMANCHE PEAK S.E.S.
FINAL SAFETY ANALYSIS REPORT
UNIT 2

MAIN FEEDWATER
LOOP SEAL ARRANGEMENT

FIGURE 10.4-22B

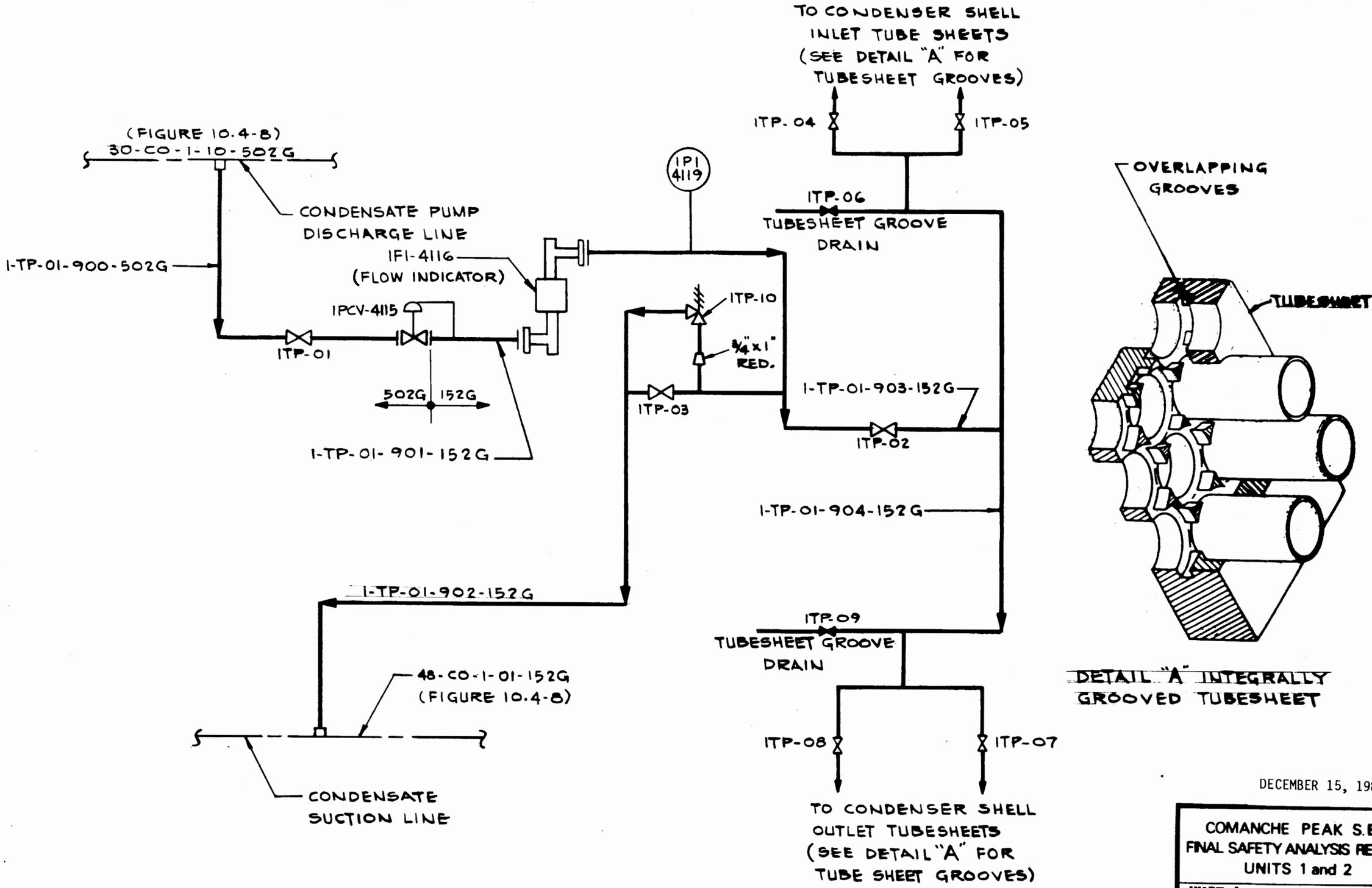

REF. DCA-4028 IMO-799

DECEMBER 15, 1980

COMANCHE PEAK S.E.S.
FINAL SAFETY ANALYSIS REPORT
UNITS 1 and 2

UNIT 1
INTEGRALLY GROOVED TUBE SHEET PRESSURIZATION SYS.

FIGURE 10.4-23

FIGURE 11.2-1 HAS BEEN DELETED. 77

COMANCHE PEAK S.E.S.
FINAL SAFETY ANALYSIS REPORT
UNITS 1 and 2

PROCESS FLOW SHEET

FIGURE 11.2-1

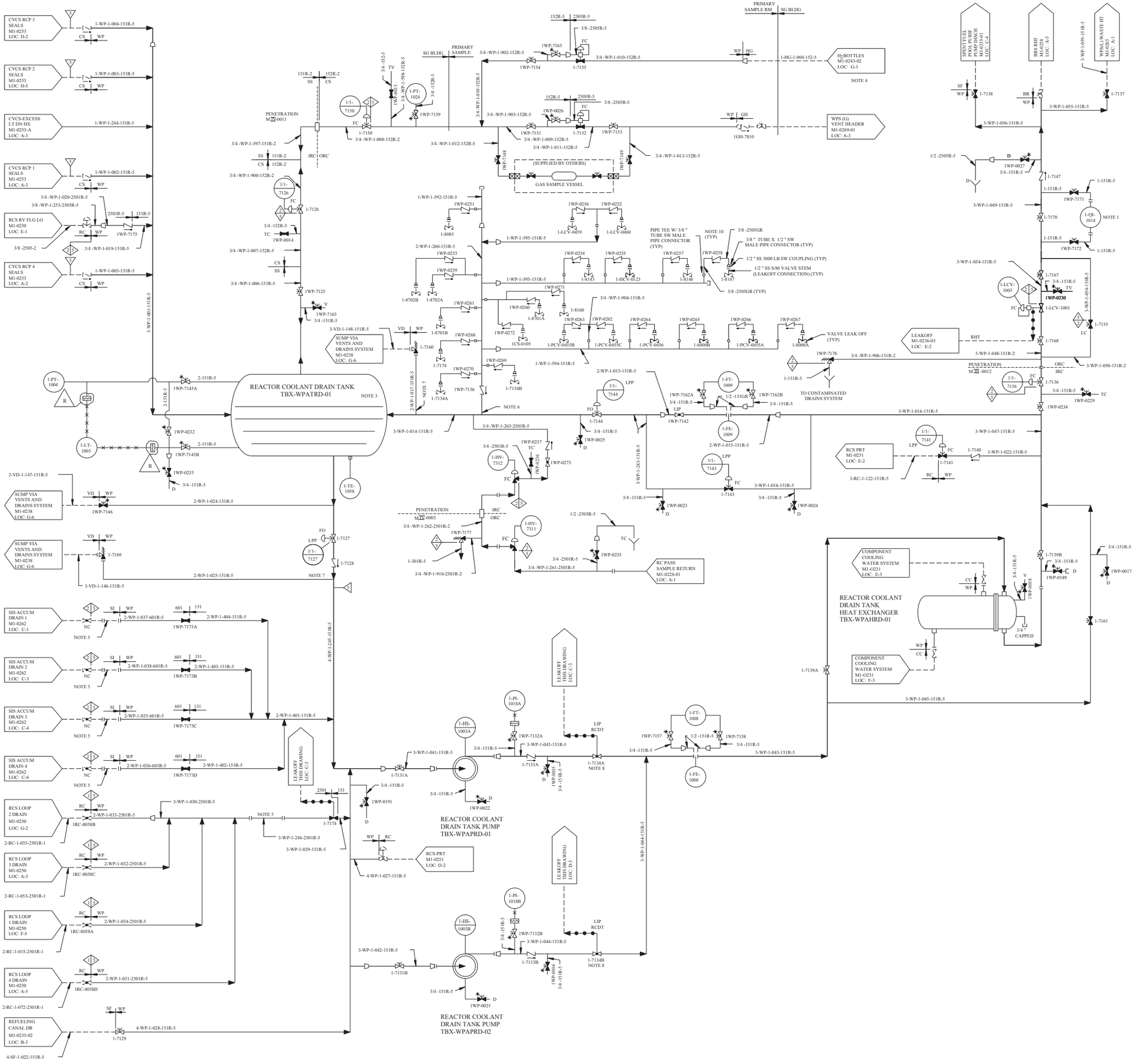

REV	DWN	CHK	APVD	REMARKS
CP-19	GLC 09-13 2005	MM 09-13 2005		THIS DRAWING REVISED TO INCORPORATE DESIGN CHANGE FDA 2003-002730-01-00 PER SK-0006-03-002730-01-00.

NOTES:

1. FOR PERIODIC PLANT LEAKAGE EVALUATION.
2. THIS PORTION OF THE LWPS IS FOR UNIT 1. IDENTICAL EQUIPMENT IS FURNISHED FOR UNIT 2.
3. TANK INLET AND RECIRCULATION CONNECTION ARE BELOW THE NORMAL WATER LEVEL.
4. LIMIT AVAILABLE H SUPPLY TO TWO STANDARD BOTTLES. PRESSURE REGULATOR SUPPLIED ON BOTTLES TO BE SET AT 5 PSIG. PROVIDE A RELIEF VALVE AT EXIT OF THE REGULATOR AND SET AT 100 PSIG.
5. SPOOL PIECE NORMALLLY REMOVED. ONLY TO BE INSTALLED WHEN DRAINING AFTER DEPRESSURIZATION.
6. PIPE LENGTH DOWNSTREAM OF THIS POINT TO BE AS LONG AS PRACTICABLE.
7. MAKE CONNECTION ON SIDE OR BOTTOM.
8. THROTTLE VALVE TO PREVENT PUMP RUNOUT DURING DRAIN.
9. INDICATES HERMETICALLY SEALED VALVE.
10. CHECK VALVE MUST BE INSTALLED IN A HORIZONTAL RUN WITH THE UNION NUT ON TOP.

REFERENCE NOTES

THIS FLOW DIAGRAM HAS BEEN REDRAWN FROM WESTINGHOUSE DRAWING 1138E99 REV 5 WITH EXCEPTIONS AS FOLLOWS:

A. VALVES AND LINE NUMBERS HAVE BEEN ADDED.

B. CONTROL LOOPS HAVE BEEN DELETED EXCEPT FOR THE PRIMARY AND THE FINAL ELEMENTS. THE DETAILS OF THE CONTROL LOOPS WILL BE SHOWN ON INSTRUMENTATION AND CONTROL DIAGRAM.

C. PLANT SPECIFIC ADDITIONS TO THE WESTINGHOUSE DIAGRAM HAVE BEEN MADE.

FSAR FIGURE 11.2-2

THIS DRAWING CREATED ELECTRONICALLY

CLASS I
(NUCLEAR SAFETY-RELATED)
SAFETY CLASS 1 — SEISMIC CATEGORY I
SAFETY CLASS 2 — CLASS 1E
SAFETY CLASS 3 — ASSOCIATED CIRCUITS

LUMINANT
CPSES
GLEN ROSE, TEXAS

LIQUID WASTE PROCESSING
FLOW DIAGRAM
REACTOR COOLANT
DRAIN TANK SUBSYSTEM

DWG. NO.	SH. NO.	REV.
M1-0264	-	CP-19

REF CKD 2/6/97 CP-16

me619200.dgn A M1-0264 B C D E F G FINAL PRINT H

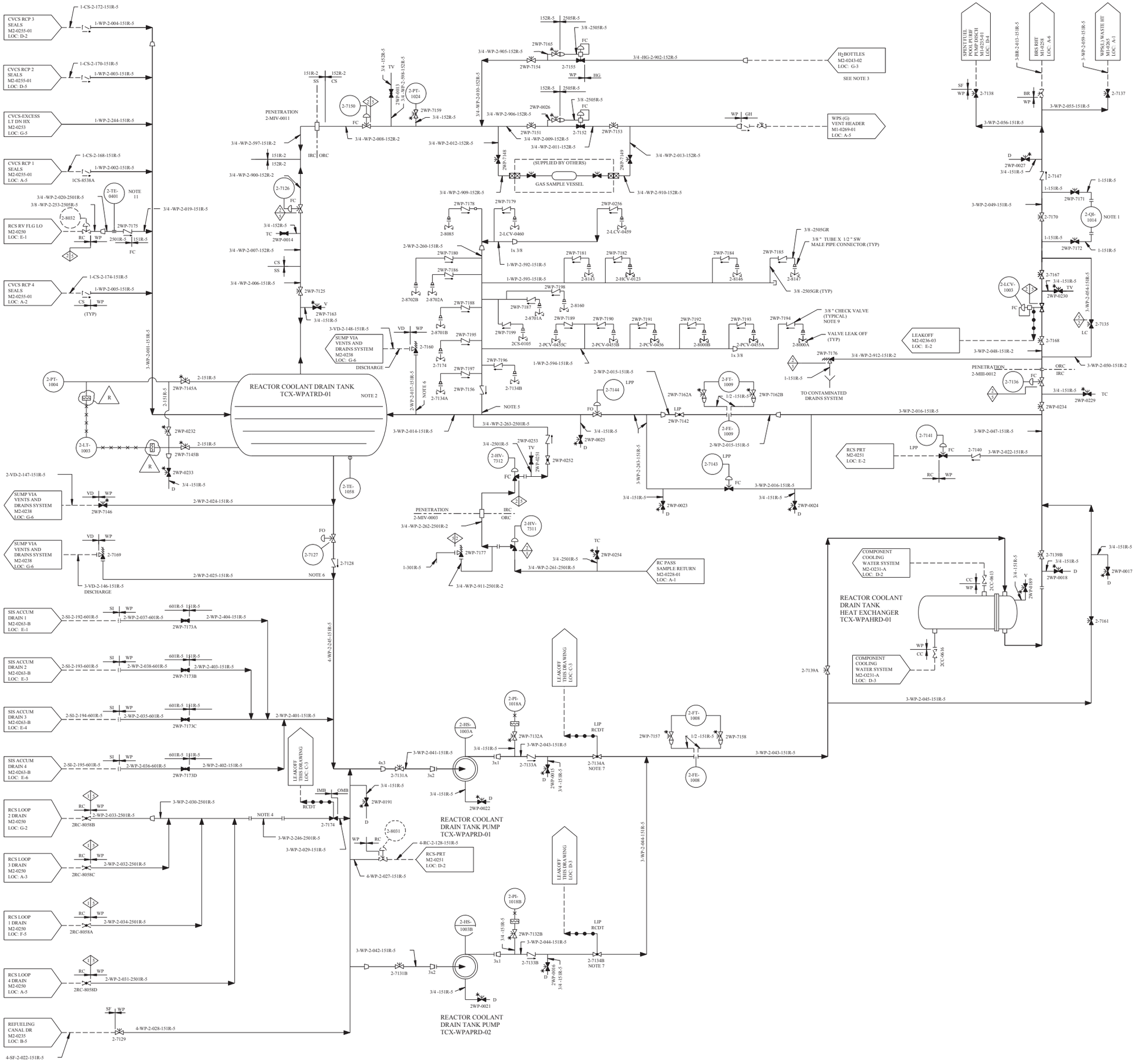
REACTOR COOLANT DRAIN TANK TCX-WPATRD-01
NOTE 2
REACTOR COOLANT DRAIN TANK PUMP TCX-WPAPRD-01
REACTOR COOLANT DRAIN TANK PUMP TCX-WPAPRD-02
REACTOR COOLANT DRAIN TANK HEAT EXCHANGER TCX-WPAHRD-01
GAS SAMPLE VESSEL
(SUPPLIED BY OTHERS)
CVCS RCP 3 SEALS M2-0255-01 LOC: D-2
CVCS RCP 2 SEALS M2-0255-01 LOC: D-5
CVCS-EXCESS LT DN HX M2-0253 LOC: G-5
CVCS RCP 1 SEALS M2-0255-01 LOC: A-5
CVCS RCP 4 SEALS M2-0255-01 LOC: A-2
RCS RV FLG LO M2-0250 LOC: E-1
SUMP VIA VENTS AND DRAINS SYSTEM M2-0238 LOC: G-6
DISCHARGE
H2 BOTTLES M2-0243-02 LOC: G-3
SEE NOTE 3
WPS (G) VENT HEADER M1-0269-01 LOC: A-5
SPENT FUEL POOL COOLING PUMP DISCH M1-0235-01 LOC: D-4
BRS RHT M1-0238 LOC: A-6
WPSLI WASTE HT M1-0265 LOC: A-1
LEAKOFF M2-0236-03 LOC: E-2
TO CONTAMINATED DRAINS SYSTEM
RCS PRT M2-0251 LOC: E-2
COMPONENT COOLING WATER SYSTEM M2-0231-A LOC: D-2
COMPONENT COOLING WATER SYSTEM M2-0231-A LOC: D-3
SIS ACCUM DRAIN 1 M2-0263-B LOC: E-1
SIS ACCUM DRAIN 2 M2-0263-B LOC: E-3
SIS ACCUM DRAIN 3 M2-0263-B LOC: E-4
SIS ACCUM DRAIN 4 M2-0263-B LOC: E-6
RCS LOOP 2 DRAIN M2-0250 LOC: G-2
RCS LOOP 3 DRAIN M2-0250 LOC: A-3
RCS LOOP 1 DRAIN M2-0250 LOC: F-5
RCS LOOP 4 DRAIN M2-0250 LOC: A-5
REFUELING CANAL DR M2-0235 LOC: B-5
RCS PASS SAMPLE RETURN M2-0228-01 LOC: A-1
PENETRATION 2-MIV-0011
PENETRATION 2-MIV-0003
PENETRATION 2-MIII-0012
LEAKOFF THIS DRAWING LOC: C-5
LEAKOFF THIS DRAWING LOC: C-3
LEAKOFF THIS DRAWING LOC: D-3
NOTE 1
NOTE 4
NOTE 5
NOTE 6
NOTE 7
NOTE 9
NOTE 11
3/8 " CHECK VALVE (TYPICAL) NOTE 9
VALVE LEAK OFF (TYP)
3/8 -2505GR (TYP)
3/8 " TUBE X 1/2 " SW MALE PIPE CONNECTOR (TYP)
1-CS-2-172-151R-5
1-CS-2-170-151R-5
1-CS-2-168-151R-5
1-CS-2-174-151R-5
1CS-8538A
1-WP-2-004-151R-5
1-WP-2-003-151R-5
1-WP-2-244-151R-5
1-WP-2-002-151R-5
1-WP-2-005-151R-5
3-WP-2-019-151R-5
3-WP-2-020-2501R-5
3/8 -WP-2-253-2505R-5
2-8032
2-TE-0401
2WP-7175
2501R-5
151R-5
(TYP)
3-WP-2-001-151R-5
2-PT-1004
2-LT-1003
2WP-7145A
2WP-7145B
2WP-0232
2WP-0233
2-151R-5
2-VD-2-147-151R-5
2-WP-2-024-151R-5
2WP-7146
2-7169
3-VD-2-146-151R-5
2-TE-1058
2-7127
2-7128
2-WP-2-025-151R-5
4-WP-2-245-151R-5
2-WP-2-401-151R-5
2-SI-2-192-601R-5
2-SI-2-193-601R-5
2-SI-2-194-601R-5
2-SI-2-195-601R-5
2-WP-2-037-601R-5
2-WP-2-038-601R-5
2-WP-2-035-601R-5
2-WP-2-036-601R-5
2-WP-2-404-151R-5
2-WP-2-403-151R-5
2-WP-2-402-151R-5
2WP-7173A
2WP-7173B
2WP-7173C
2WP-7173D
601R-5 151R-5
2-WP-2-033-2501R-5
2-WP-2-032-2501R-5
2-WP-2-034-2501R-5
2-WP-2-031-2501R-5
2RC-8058B
2RC-8058C
2RC-8058A
2RC-8058D
2-WP-2-028-151R-5
4-SF-2-022-151R-5
2-7129
3-WP-2-030-2501R-5
3-WP-2-246-2501R-5
3-WP-2-029-151R-5
2-7174
2-7131A
2-7131B
2-7133A
2-7133B
2-7134A
2-7134B
2-7134A
2-7134B
2WP-0191
2WP-0022
2WP-0021
2WP-0013
2WP-0016
3-WP-2-041-151R-5
3-WP-2-042-151R-5
3-WP-2-043-151R-5
3-WP-2-044-151R-5
2-HS-1003A
2-HS-1003B
2-PI-1018A
2-PI-1018B
2-HCV-0123
2-LCV-0460
2-LCV-0459
2-8143
2-8146
2-8147
2-8085
2-8160
2-8702A
2-8702B
2-8701A
2-8701B
2-8000A
2-8000B
2-PCV-0455A
2-PCV-0455B
2-PCV-0455C
2-PCV-0456
2CS-0105
2WP-7132A
2WP-7132B
2WP-7157
2WP-7158
2-FT-1008
2-FE-1008
2-FT-1009
2-FE-1009
1/2 -151R-5
2-WP-2-015-151R-5
2-WP-2-016-151R-5
2-WP-2-243-151R-5
2-7144
2-7143
2-7141
2-7140
2WP-7142
2WP-7162A
2WP-7162B
2WP-0023
2WP-0024
2WP-0025
2WP-0252
2-HIV-7312
2-HIV-7311
2WP-P0251
2-WP-2-262-2501R-2
2-WP-2-261-2501R-5
2-WP-2-911-2501R-2
2WP-7177
2WP-0254
1-301R-5
2-WP-2-912-151R-2
2-WP-2-048-151R-2
2-WP-2-047-151R-5
2-WP-2-022-151R-5
2-WP-2-050-151R-2
2-WP-2-045-151R-5
2-7139A
2-7139B
2-7147
2-7148
2-7149
2-7150
2-7151
2-7152
2-7153
2-7154
2-7155
2-7159
2-7160
2-7161
2-7162
2-7163
2-7165
2-7166
2-7167
2-7168
2-7170
2-7171
2-7172
2-7135
2-7136
2-7137
2-7138
2-7126
2-LCV-1003
2-QI-1014
2WP-0230
2WP-0234
2WP-0017
2WP-0018
2WP-0027
2WP-7125
2WP-7163
2WP-7165
2WP-7166
2WP-7167
2WP-7168
2WP-7169
2WP-7170
2WP-7171
2WP-7172
2WP-7173
2WP-7174
2WP-7175
2WP-7176
2WP-7177
2WP-7178
2WP-7179
2WP-7180
2WP-7181
2WP-7182
2WP-7184
2WP-7185
2WP-7186
2WP-7187
2WP-7188
2WP-7189
2WP-7190
2WP-7191
2WP-7192
2WP-7193
2WP-7194
2WP-7195
2WP-7196
2WP-7197
2WP-7198
2WP-7199
2WP-0256
2WP-0014
2WP-0026
2WP-0229
2WP-0253
2WP-0254
2WP-0255
2WP-0256
2WP-7148
2WP-7149
2WP-7153
2WP-7154
2WP-7156
2WP-7165
2WP-7166
2WP-7167
2WP-7168
2WP-7169
2WP-7170
2WP-7171
2WP-7172
2WP-7173
2WP-7174
2WP-7175
2WP-7176
2WP-7177
2WP-7178
2WP-7179
2WP-7180
2WP-7181
2WP-7182
2WP-7184
2WP-7185
2WP-7186
2WP-7187
2WP-7188
2WP-7189
2WP-7190
2WP-7191
2WP-7192
2WP-7193
2WP-7194
2WP-7195
2WP-7196
2WP-7197
2WP-7198
2WP-7199
2-WP-2-260-151R-5
2-WP-2-592-151R-5
2-WP-2-593-151R-5
2-WP-2-594-151R-5
1-WP-2-592-151R-5
1-WP-2-593-151R-5
1-WP-2-594-151R-5
3-WP-2-014-151R-5
3-VD-2-148-151R-5
2-WP-2-017-151R-5
3/4 -WP-2-597-151R-2
3/4 -WP-2-900-152R-2
3/4 -WP-2-007-152R-5
3/4 -WP-2-006-151R-5
3/4 -WP-2-008-152R-2
3/4 -WP-2-905-152R-5
3/4 -WP-2-906-152R-5
3/4 -WP-2-010-152R-5
3/4 -WP-2-009-152R-5
3/4 -WP-2-011-152R-5
3/4 -WP-2-012-152R-5
3/4 -WP-2-013-152R-5
3/4 -WP-2-909-152R-5
3/4 -WP-2-910-152R-5
3/4 -WP-2-263-2501R-5
3/4 -WP-2-597-151R-5
3/4 -HG-2-902-152R-5
3/4 -WP-2-597-152R-5
3/4 -WP-2-055-151R-5
3/4 -WP-2-056-151R-5
3/4 -WP-2-049-151R-5
3/4 -WP-2-054-151R-5
3/4 -WP-2-050-151R-2
3/4 -WP-2-016-151R-5
3/4 -WP-2-047-151R-5
3/4 -WP-2-022-151R-5
3/4 -WP-2-045-151R-5
3/4 -WP-2-043-151R-5
3/4 -WP-2-044-151R-5
3/4 -WP-2-041-151R-5
3/4 -WP-2-042-151R-5
3/4 -WP-2-912-151R-2
3/4 -WP-2-913-151R-2
3/4 -WP-2-914-151R-2
3/4 -WP-2-915-151R-2
3/4 -WP-2-916-151R-2
3/4 -WP-2-917-151R-2
3/4 -WP-2-918-151R-2
3/4 -WP-2-919-151R-2
3/4 -WP-2-920-151R-2
3/4 -WP-2-921-151R-2
3/4 -WP-2-922-151R-2
3/4 -WP-2-923-151R-2
3/4 -WP-2-924-151R-2
3/4 -WP-2-925-151R-2
3/4 -WP-2-926-151R-2
3/4 -WP-2-927-151R-2
3/4 -WP-2-928-151R-2
3/4 -WP-2-929-151R-2
3/4 -WP-2-930-151R-2
3/4 -WP-2-931-151R-2
3/4

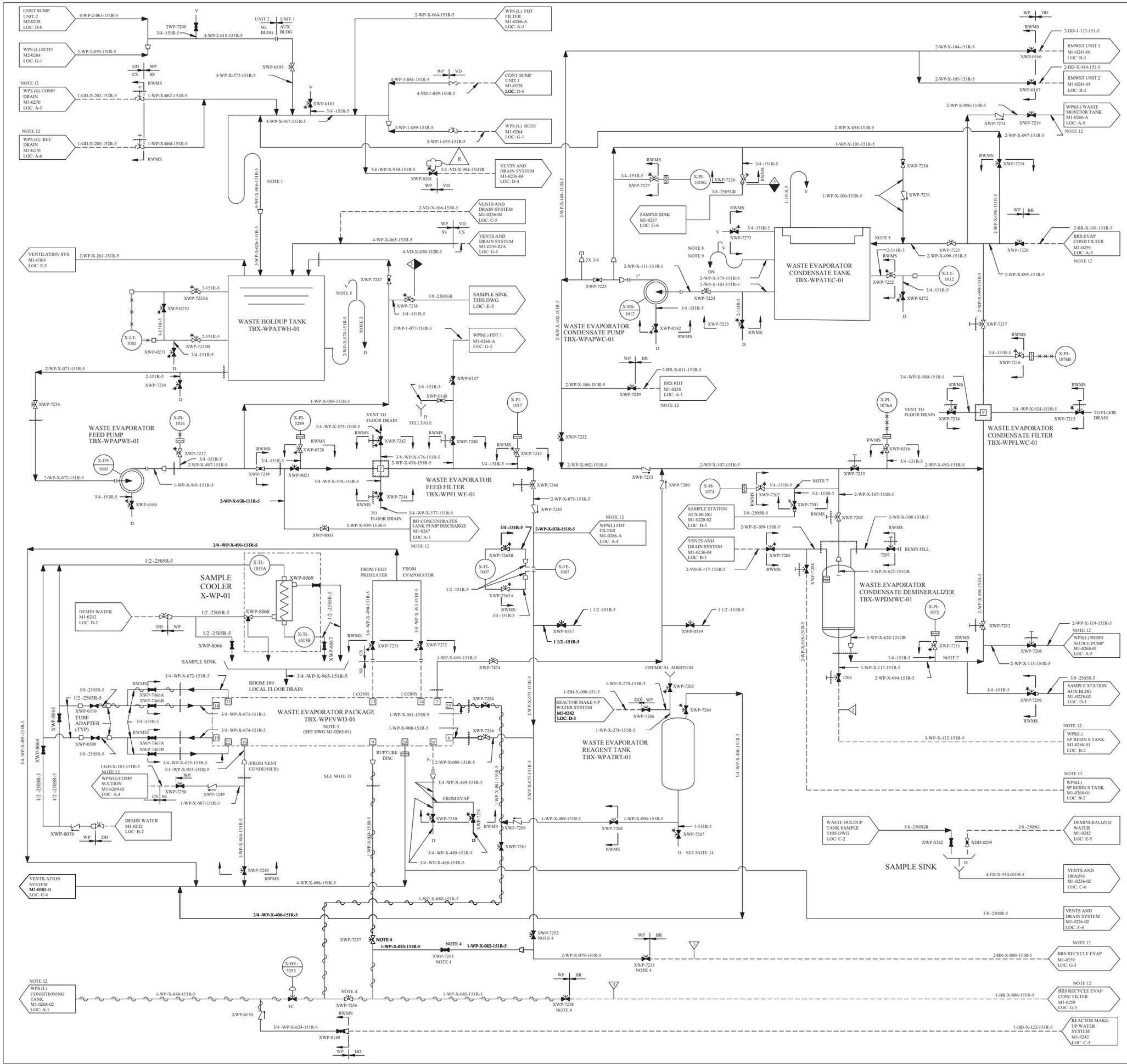

REV	DWN	CHK	APVD	REMARKS
CP-31	Mkd 06-23-2005	DLK 06-23-2005		THIS DRAWING REVISED TO INCORPORATE DESIGN CHANGE FDA-2004-000686-01-00 PER SK-0001-04-000686-01-00.

NOTES:

1. LOOP SEAL TO EXTEND 12 INCHES BELOW AND ABOVE PIPE.
2. LOWER LOOP TO EXTEND 12 INCHES BELOW OVERFLOW CONNECTION AND TOP LOOP TO EXTEND TO TOP OF TANK.
3. FOR DETAILS REGARDING LINE SIZES AND NUMBER OF CONNECTIONS REFER TO WESTINGHOUSE DRAWING 730J376. NUMBERS INDICATED THUS ☐ REFER TO WESTINGHOUSE DRAWING NUMBER 4667D55.
4. LOCATE THESE VALVES AS CLOSE TOGETHER AS POSSIBLE.
5. CONNECTION LOCATED NEAR TANK BOTTOM TO PREVENT FLOW IMPINGEMENT ON DIAPHRAGM.
6. EQUIPMENT SHOWN IS COMMON FOR UNIT 1 AND UNIT 2.
7. LOCATE SAMPLE LINE CLOSE TO PROCESS LINE FOR REPRESENTATIVE SAMPLE.
8. SIPHON BREAKER LOCATED TOP OF TOP LOOP.
9. LOWER LOOP TO EXTEND 12 INCHES BELOW OVERFLOW CONNECTION AND TOP LOOP TO EXTEND 6 INCHES BELOW DIAPHRAGM FLANGE.
10. FOR MECHANICAL NOTES AND SYMBOLS SEE DRAWING M1-0200.
11. DELETED
12. DENOTES RADIOACTIVE WASTE MANAGEMENT SYSTEM CONTINUES ON IDENTIFIED DRAWING.
13. UNLESS OTHERWISE NOTED, ALL DRAINS COLLECTED BY LOCAL DRAIN SYSTEM TO DRAIN CHANNEL B.
14. DRAIN TO BE LOCALLY COLLECTED UNDER ADMINISTRATIVE CONTROL AND TRANSFERRED TO CHEMICAL SUMP IN TURBINE BUILDING.
15. WHEN LINES IN THE WASTE PROCESSING SYSTEM ARE NOT BEING USED FOR THE TRANSFER OF LIQUID CONTAINING CONCENTRATED BORIC ACID (UP TO 12% BY WEIGHT PER DBD-ME-0264), THE HEAT TRACING SET POINT MAY BE LOWER THAN 170 DEGREES F. SETPOINTS MAY BE SET FOR FREEZE PROTECTION WHEN THE LINE IS NOT IN USE, OR CONTAINS BORIC ACID SOLUTION (4% BY WEIGHT OR LESS).

REFERENCE DRAWINGS

THIS FLOW DIAGRAM HAS BEEN REDRAWN FROM WESTINGHOUSE DRAWING 1139E00 SHEET 1 OF 4, REV 5 WITH EXCEPTIONS AS FOLLOWS:

a. VALVE AND LINE NUMBERS HAVE BEEN ADDED.

b. CONTROL LOOPS HAVE BEEN DELETED EXCEPT FOR THE PRIMARY AND FINAL ELEMENTS. DETAILS OF THE CONTROL LOOPS WILL BE SHOWN ON INSTRUMENTATION AND CONTROL DIAGRAM.

c. PLANT SPECIFIC ADDITIONS TO THE ABOVE WESTINGHOUSE DIAGRAM HAVE BEEN MADE.

FSAR FIGURE 11.2-3

THIS DRAWING CREATED ELECTRONICALLY

CLASS II

LUMINANT
CPSES
GLEN ROSE, TEXAS

FLOW DIAGRAM
LIQUID WASTE PROCESSING
DRAIN CHANNEL A

DWG. NO.	SH. NO.	REV.
M1-0265	-	CP-31

FINAL PRINT

REF CKD CP-27 10/17/97

me609300.dgn A M1-0265 B C D E F G H

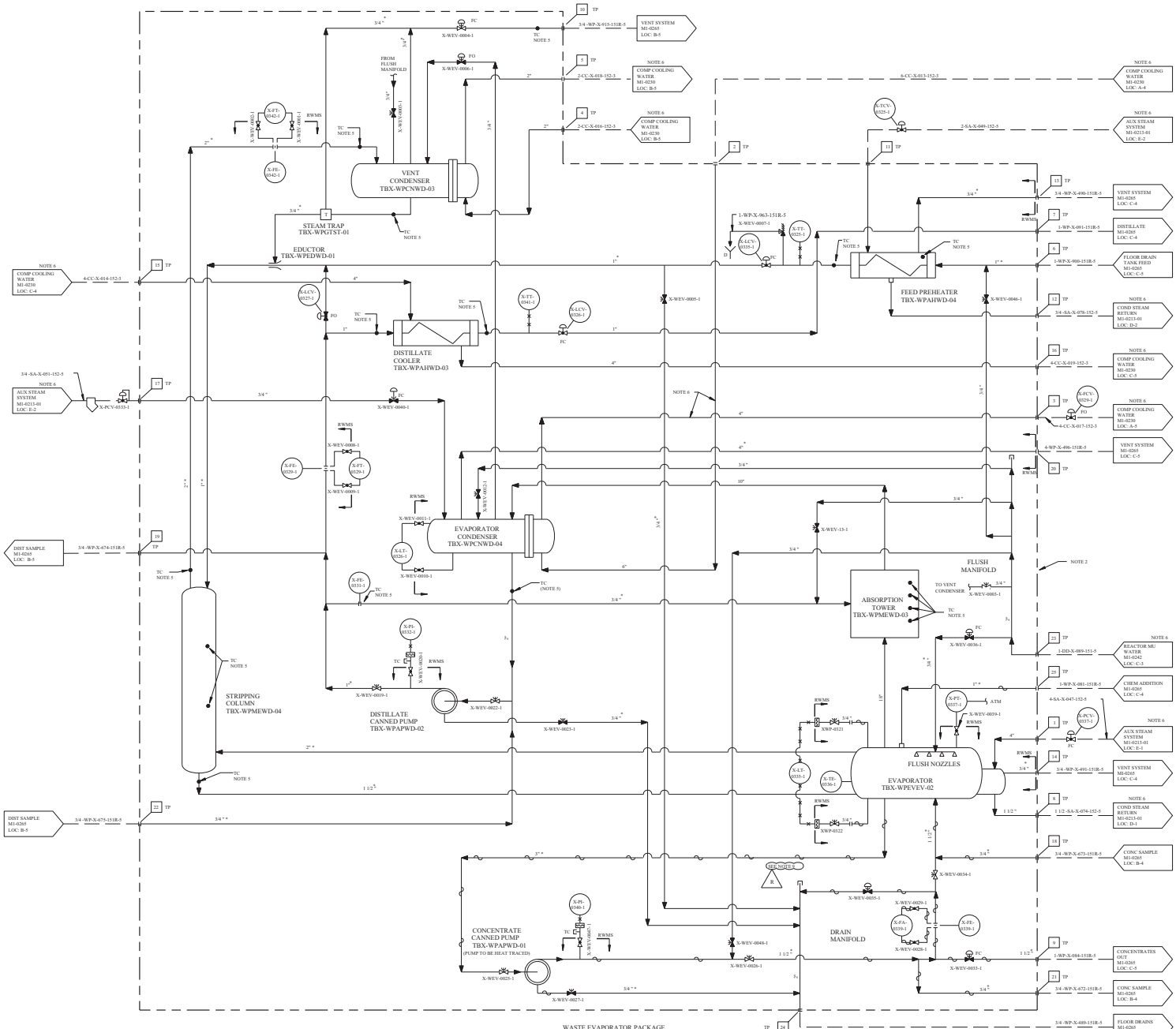

REV	DWN	CHKD	APVD	REMARKS
CP-11	REV 01 07 2001	DIS 01 07 2001		THIS DRAWING REVISED TO INCORPORATE DESIGN CHANGE FDA-2001-000701-01-00 PER SK-0000-01-000701-01-00.

NOTES:

1. FOR MECHANICAL NOTES AND SYMBOLS, SEE DRAWING M1-0200.
2. 15 GPM WASTE EVAPORATOR SUPPLY BY WESTINGHOUSE, DRAWING 4667D55, PIPING AND EQUIPMENT SUPPLIED ON A SKID, SHOP ORDER NO. 232, WNES SPIN NO. TBX-WPEVWD-01.
3. ALL LINES MARKED WITH * ARE CLASS 151R. THIS IS A DESIGNATION ONLY AND NO ADDITIONAL INSPECTION HAS BEEN PERFORMED ON THIS PIPING. ALL OTHER PIPE IS CLASS 151.
4. TP INDICATES TERMINAL POINT AND NOZZLE NUMBER ON EVAPORATOR, SEE WESTINGHOUSE DRAWING 7301376, R-10.
5. TC INDICATES TEST CONNECTIONS FOR FIELD TEST, 1/2 " NPT PLUGGED BOSSES.
6. VD, CC, SA, DD SYSTEMS, INTERFACING WITH WP SYSTEM, ARE NOT PART OF THE RADIOACTIVE WASTE MANAGEMENT SYSTEM (RWMS).
7. FOR INSTALLATION DETAILS OF INSTRUMENTATION FOR THE EVAPORATOR SKID, SEE WESTINGHOUSE DRAWING 7373885, R-1A.
8. FOR EQUIPMENT LOGIC DIAGRAM, SEE INSTRUMENTATION AND CONTROL DIAGRAM NO. TNE-M1-2265-SERIES.
9. WHEN LINES IN THE WASTE PROCESSING SYSTEM ARE NOT BEING USED FOR THE TRANSFER OF LIQUID CONTAINING CONCENTRATED BORIC ACID (UP TO 12% BY WEIGHT PER DBD-ME-0264), THE HEAT TRACING SET POINT MAY BE LOWER THAN 170 DEGREES F. SETPOINTS MAY BE SET FOR FREEZE PROTECTION WHEN THE LINE IS NOT IN USE, OR CONTAINS BORIC ACID SOLUTION (4% BY WEIGHT OR LESS).

FSAR FIGURE 11.2-3

THIS DRAWING CREATED ELECTRONICALLY

CLASS I
(NUCLEAR SAFETY-RELATED)
SAFETY CLASS 1 SEISMIC CATEGORY I
SAFETY CLASS 2 CLASS IE
SAFETY CLASS 3 ASSOCIATED CIRCUITS

TXU ELECTRIC
CPSES
GLEN ROSE, TEXAS

FLOW DIAGRAM
LIQUID WASTE PROCESSING
DRAIN CHANNEL A

DWG. NO.	SH. NO.	REV.
M1-0265	01	CP-11

$$$$$$DATE$$$$$

mc340100.dgn M1-0265-01

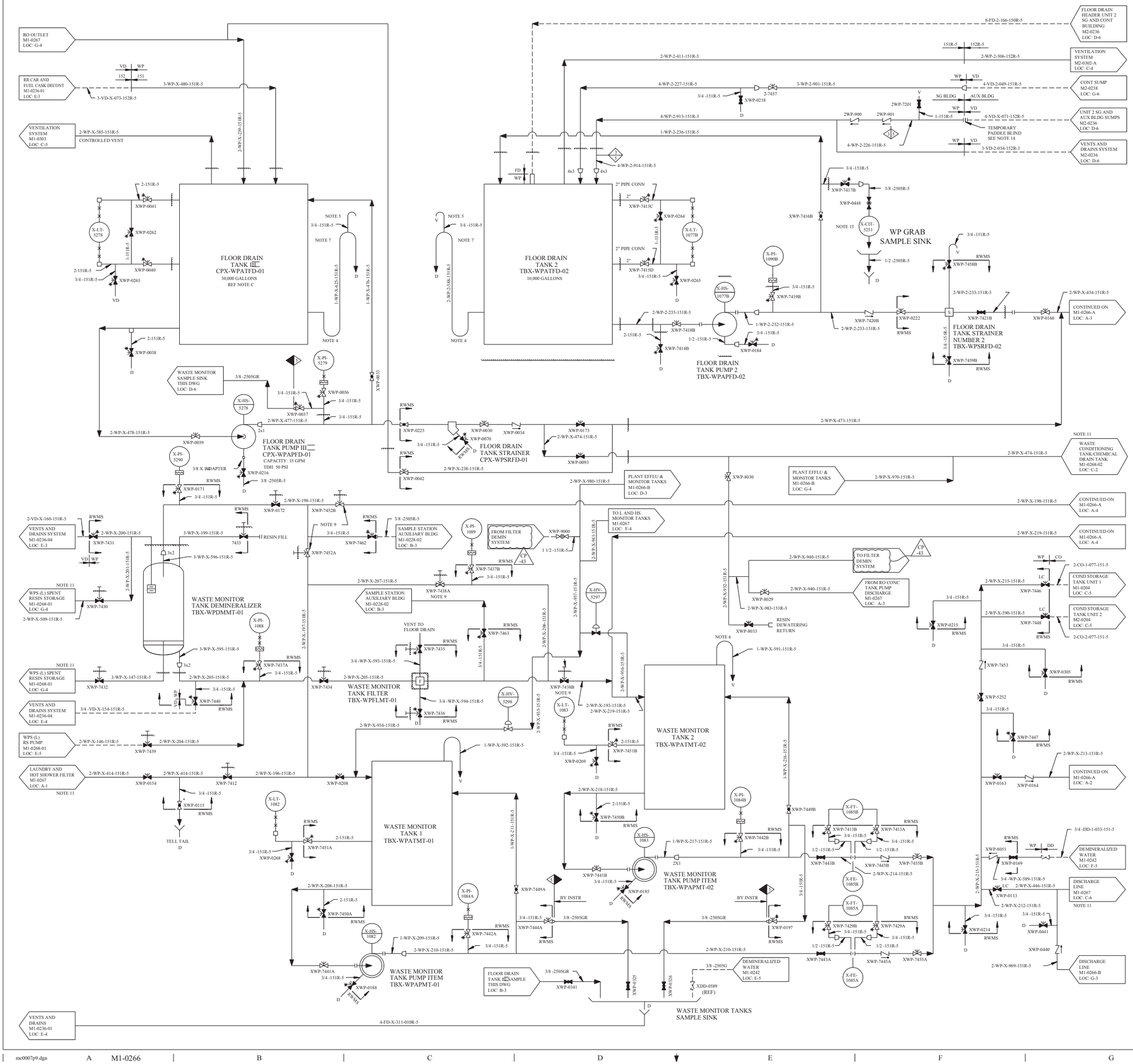

REV	DWN	CHKD	APVD	REMARKS
CP-43	HAC 12-09-2010			THIS DRAWING REVISED TO INCORPORATE EDITORIAL CHANGES AS NOTED AND AI-2010-01019-1.

NOTES:

1. FOR MECHANICAL SYMBOLS AND NOTES SEE DRAWING M1-0200.
2. DELETED
3. THESE VALVES ARE OF THE HERMETICALLY-SEALED TYPE.
4. LOWER LOOP TO EXTEND 12 INCHES BELOW CONNECTION AND TOP LOOP TO EXTEND ABOVE HIGHEST ELEVATION OF OVERFLOW.
5. LOCATE SIPHON AT TOP OF LOOP.
6. VENT LINE TO BE NOT MORE THAN 12 INCHES ABOVE FLOOR.
7. ASSURE PIPING IS AT HIGHER ELEVATION THAN TANK TO PREVENT DRAINING TANK.
8. EQUIPMENT ON THIS DRAWING IS COMMON TO UNITS 1 AND 2, WITH THE EXCEPTION OF EQUIPMENT PER NOTE 2.
9. LOCATE THESE VALVES AS CLOSE TOGETHER AS POSSIBLE.
10. DELETED
11. INDICATES RADIOACTIVE WASTE MANAGEMENT SYSTEM CONTINUES ON IDENTIFIED DRAWING.
12. UNLESS OTHERWISE NOTED, DRAINS COLLECTED BY LOCAL DRAINS SYSTEM.
13. DELETED
14. THIS PADDLE BLIND TO BE REMOVED ONLY AT THE DIRECTION OF NUCLEAR OPERATIONS.
15. CONDUCTIVITY ANALYZER MAY BE USED IN LIEU OF GRAB SAMPLE.

REFERENCE NOTE:

THIS FLOW DIAGRAM HAS BEEN REDRAWN FROM WESTINGHOUSE DRAWING 1139E00 SH 3 AND 4 OF 4 REV 5 WITH EXCEPTIONS AS FOLLOWS:

a. VALVES AND LINE NUMBERS HAVE BEEN ADDED.

b. CONTROL LOOPS HAVE BEEN DELETED EXCEPT FOR THE PRIMARY AND FINAL ELEMENTS. DETAIL OF THE CONTROL LOOPS WILL BE SHOWN ON INSTRUMENTATION AND CONTROL DIAGRAM.

c. PLANT SPECIFIC ADDITIONS TO THE ABOVE REFERENCED WESTINGHOUSE DIAGRAM HAVE BEEN MADE.

DRAWING M1-0266 REV CP-20
HAS BEEN SPLIT INTO THE FOLLOWING SHEETS:
M1-0266
M1-0266-B

DRAWING 2323-M1-0266 REV CP-8
HAS BEEN SPLIT INTO THE FOLLOWING SHEETS:
M1-0266
M1-0266-A

CLASS I
(NUCLEAR SAFETY-RELATED)
SAFETY CLASS 1 — SEISMIC CATEGORY I
SAFETY CLASS 2 — CLASS 1E
SAFETY CLASS 3 — ASSOCIATED CIRCUITS

LUMINANT
CPNPP
GLEN ROSE, TEXAS

FLOW DIAGRAM
LIQUID WASTE PROCESSING
DRAIN CHANNEL B

DWG. NO. M1-0266 | SH. NO. - | REV. CP-43

FSAR FIGURE 11.2-4

THIS DRAWING CREATED ELECTRONICALLY

REF CHKD 8-19-2003

me0007p9.dgn | M1-0266 | FINAL PRINT

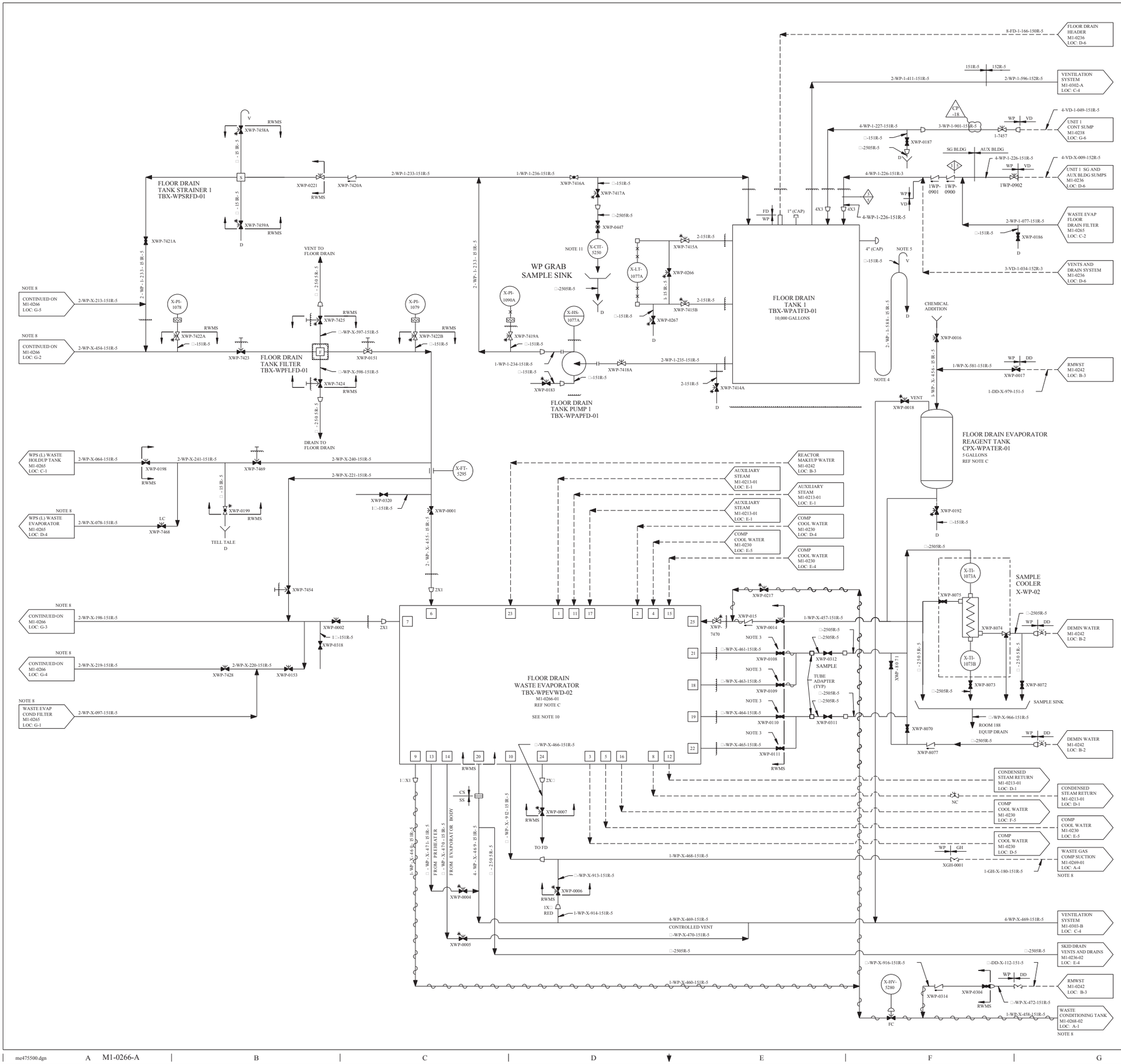

REV	DWN	CHK	APVD	REMARKS
CP-18	DLK 10-28-2015	GAW 10-28-2015	MHF 10-29-2015	THIS DRAWING REVISED TO INCORPORATE AI-CR-2015-010410-1 TO EDITORIALLY ADD R TO LINE NUMBER 3-WP-1-901-151-5.

NOTES:

1. FOR MECHANICAL SYMBOLS AND NOTES SEE DRAWING M1-0200.
2. VALVES XWP-7468 AND XWP-7469 (LOCATION B-3) ARE Q-VALVES WHICH REPLACED WESTINGHOUSE ORIGINALLY SUPPLIED NON-Q VALVES, XWP-0202 AND XWP-7427 RESPECTIVELY.
3. * THESE VALVES ARE OF THE HERMETICALLY-SEALED TYPE.
4. LOWER LOOP TO EXTEND 12 INCHES BELOW CONNECTION AND TOP LOOP TO EXTEND ABOVE HIGHEST ELEVATION OF OVERFLOW.
5. LOCATE SIPHON BREAKER AT TOP OF LOOP.
6. DELETED
7. EQUIPMENT ON THIS DRAWING IS COMMON TO UNITS 1 AND 2.
8. INDICATES RADIOACTIVE WASTE MANAGEMENT SYSTEM CONTINUES ON IDENTIFIED DRAWING.
9. UNLESS OTHERWISE NOTED, DRAINS COLLECTED BY LOCAL DRAINING SYSTEM.
10. WHEN LINES IN THE WASTE PROCESSING SYSTEM ARE NOT BEING USED FOR THE TRANSFER OF LIQUID CONTAINING CONCENTRATED BORIC ACID (UP TO 12% BY WEIGHT PER DBD-ME-0264), THE HEAT TRACING SET POINT MAY BE LOWER THAN 170 DEGREES F. SETPOINTS MAY BE SET FOR FREEZE PROTECTION WHEN THE LINE IS NOT IN USE, OR CONTAINS BORIC ACID SOLUTION (4% BY WEIGHT OR LESS).
11. CONDUCTIVITY ANALYZER MAY BE USED IN LIEU OF GRAB SAMPLE.

REFERENCE NOTE:

THIS FLOW DIAGRAM HAS BEEN REDRAWN FROM WESTINGHOUSE DRAWING 1139E00 SH 3 AND 4 OF 4 REV 5 WITH EXCEPTIONS AS FOLLOWS:

A) VALVES AND LINE NUMBERS HAVE BEEN ADDED.

B) CONTROL LOOPS HAVE BEEN DELETED EXCEPT FOR THE PRIMARY AND FINAL ELEMENTS. DETAIL OF THE CONTROL LOOPS WILL BE SHOWN ON INSTRUMENTATION AND CONTROL DIAGRAM.

C) PLANT SPECIFIC ADDITIONS TO THE ABOVE REFERENCED WESTINGHOUSE DIAGRAM HAVE BEEN MADE.

FSAR FIGURE 11.2-4

THIS DRAWING CREATED ELECTRONICALLY

DRAWING 2323-M1-0266 REV CP-8
HAS BEEN SPLIT INTO THE FOLLOWING SHEETS:

M1-0266
M1-0266-A

CLASS I
(NUCLEAR SAFETY-RELATED)
SAFETY CLASS 1 SEISMIC CATEGORY I
SAFETY CLASS 2 CLASS 1E
SAFETY CLASS 3 ASSOCIATED CIRCUITS

LUMINANT
CPNPP
GLEN ROSE, TEXAS

FLOW DIAGRAM
LIQUID WASTE PROCESSING
DRAIN CHANNEL B

DWG. NO.	SH. NO.	REV.
M1-0266	A	CP-18

$$$$$$$ DATE $$$$$$$ REF CKD 9/10/97 CP-13

me475500.dgn A M1-0266-A

< FINAL PRINT >

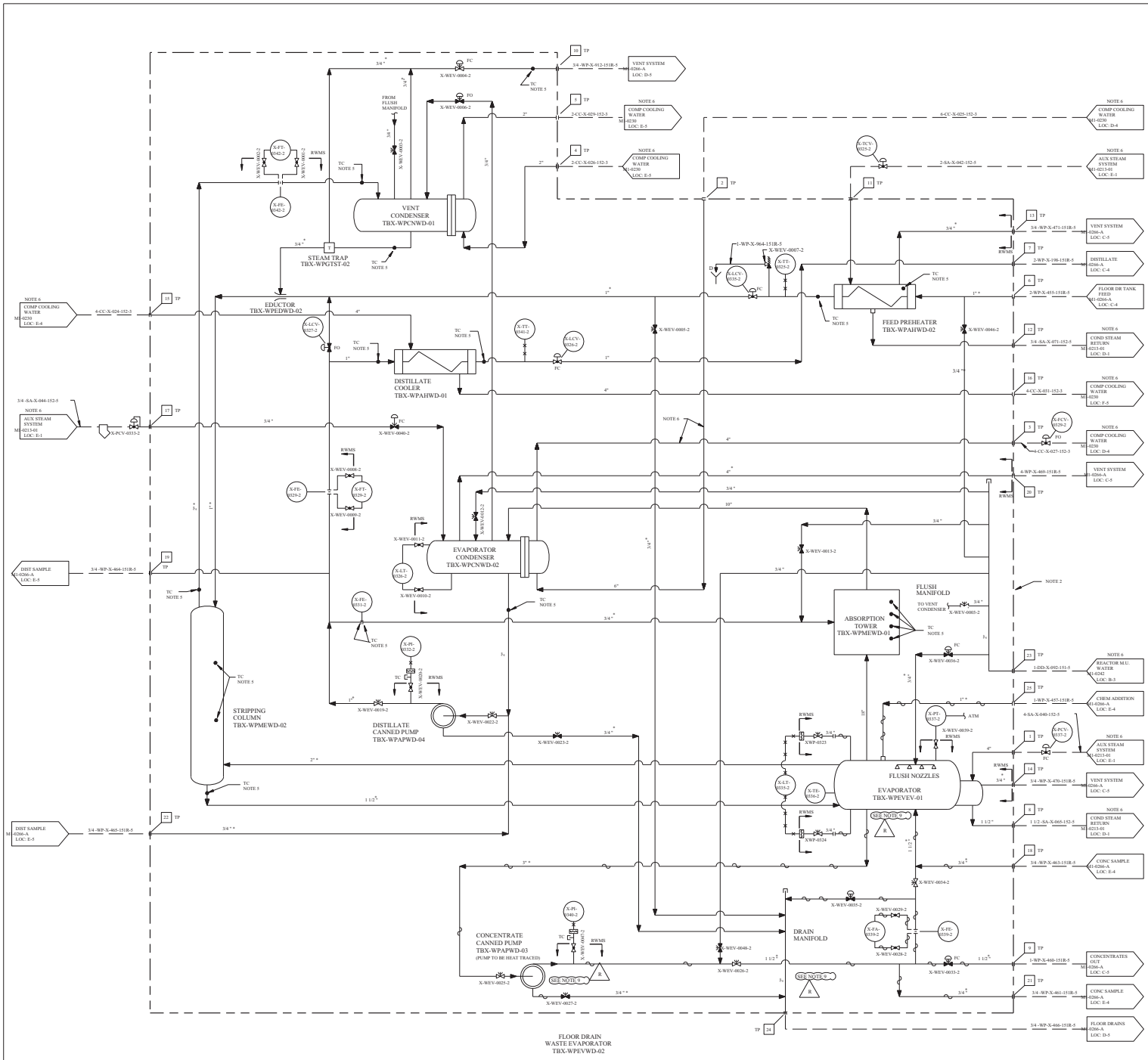

REV	DWN	CHKD	APVD	REMARKS
CP-12	RO 08/07/2001	DSS 08/07/2001		THIS DRAWING REVISED TO INCORPORATE DESIGN CHANGE FDA-2001-000701-01-00 PER SK-0009-01-000701-01-00.

NOTES:

1. FOR MECHANICAL NOTES AND SYMBOLS SEE DRAWING M1-0200.
2. 15 GPM WASTE EVAPORATOR SUPPLY BY WESTINGHOUSE DRAWING 466TD54, PIPING AND EQUIPMENT SUPPLIED ON A SKID, SHOP ORDER NUMBER 232, WNES SPIN NUMBER TBX-WPEVWD-02.
3. ALL LINES MARKED WITH * ARE CLASS 151R. THIS IS A DESIGNATION ONLY AND NO ADDITIONAL INSPECTION HAS BEEN PERFORMED ON THIS PIPING. ALL OTHER PIPE IS CLASS 151.
4. TP INDICATES "TERMINAL POINT" AND NOZZLE NUMBER ON EVAPORATOR, SEE WESTINGHOUSE DRAWING 7301376, R-10.
5. TC INDICATES "TEST CONNECTIONS" FOR FIELD TEST, 1/2 " NPT PLUGGED BOSSES.
6. VD, CC, SA, DD SYSTEMS, INTERFACING WITH WP SYSTEM, ARE NOT PART OF THE RADIOACTIVE WASTE MANAGEMENT SYSTEM (RWMS).
7. FOR INSTALLATION DETAILS OF INSTRUMENTATION FOR THE EVAPORATOR SKID, SEE WESTINGHOUSE DRAWING 7373885-UNIT-1, R-1A.
8. FOR EQUIPMENT LOGIC DIAGRAM SEE INSTRUMENTATION AND CONTROL DIAGRAM M1-2266-SERIES.
9. WHEN LINES IN THE WASTE PROCESSING SYSTEM ARE NOT BEING USED FOR THE TRANSFER OF LIQUID CONTAINING CONCENTRATED BORIC ACID (UP TO 12% BY WEIGHT PER DBD-ME-0264), THE HEAT TRACING SET POINT MAY BE LOWER THAN 170 DEGREES F. SETPOINTS MAY BE SET FOR FREEZE PROTECTION WHEN THE LINE IS NOT IN USE, OR CONTAINS BORIC ACID SOLUTION 4% BY WEIGHT OR LESS).

R

FSAR FIGURE 11.2-4

THIS DRAWING CREATED ELECTRONICALLY

CLASS I
(NUCLEAR SAFETY-RELATED)
SAFETY CLASS 1 SEISMIC CATEGORY I
SAFETY CLASS 2 CLASS II
SAFETY CLASS 3 ASSOCIATED CIRCUITS

TXU ELECTRIC
CPSES
GLEN ROSE, TEXAS

FLOW DIAGRAM
LIQUID WASTE PROCESSING
DRAIN CHANNEL B

DWG. NO.	SH. NO.	REV.
M1-0266	01	CP-12

REF CKD 11/15/99 CP-11

SSSSSSDATESSSSS

mc343900.dgn M1-0266-01

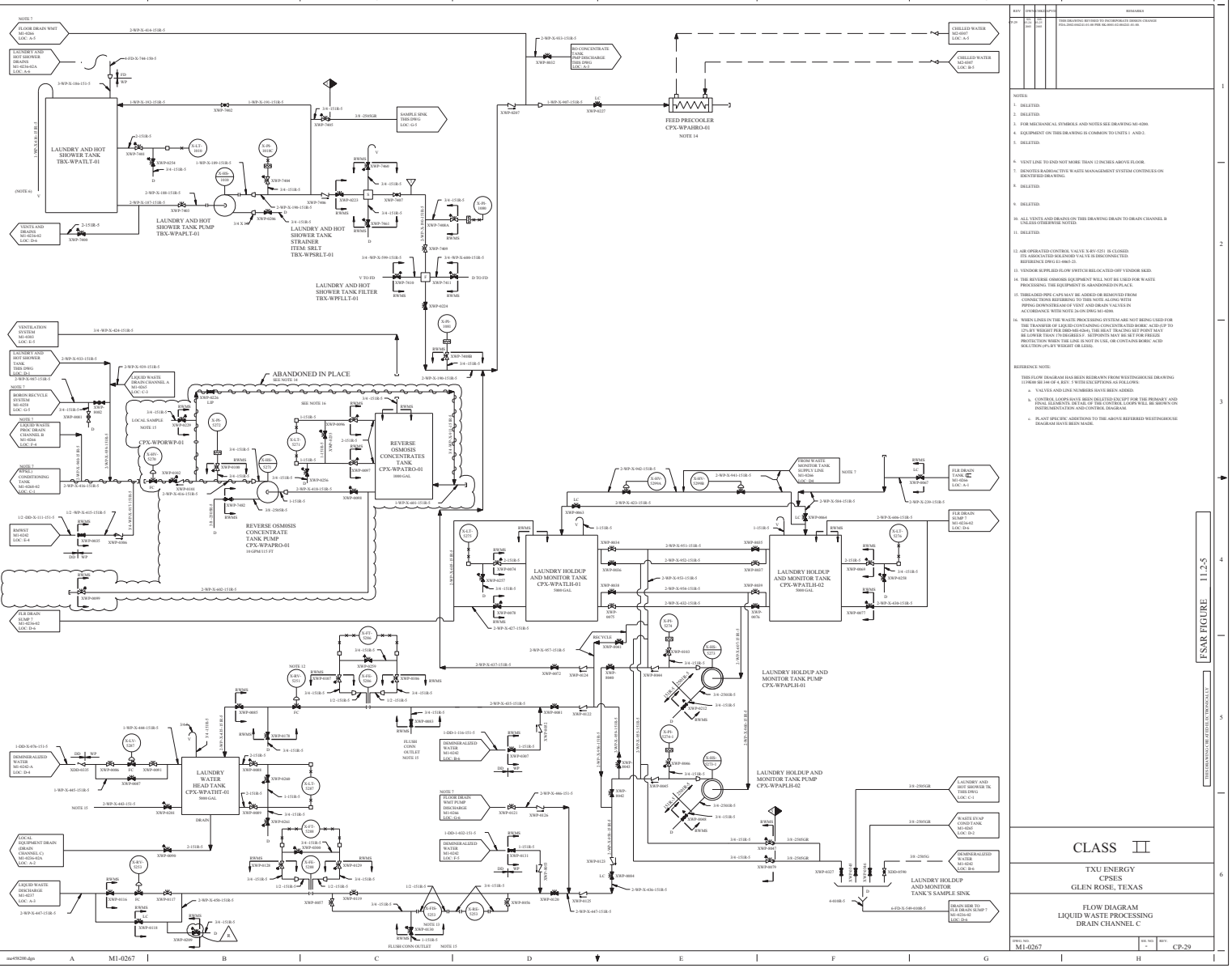

REV.	DWN	CHKD	APVD	REMARKS
CP-29	TJA 10/05	TBS 10/05		THIS DRAWING REVISED TO INCORPORATE DESIGN CHANGE PDA-2002-0042-01-00 PER NL-0002-03-00-021-01-00.

NOTES:

1. DELETED.
2. DELETED.
3. FOR MECHANICAL SYMBOLS AND NOTES SEE DRAWING MI-0200.
4. EQUIPMENT ON THIS DRAWING IS COMMON TO UNITS 1 AND 2.
5. DELETED.
6. VENT LINE TO END NOT MORE THAN 12 INCHES ABOVE FLOOR.
7. DENOTES RADIOACTIVE WASTE MANAGEMENT SYSTEM CONTINUES ON IDENTIFIED DRAWING.
8. DELETED.
9. DELETED.
10. ALL VENTS AND DRAINS ON THIS DRAWING DRAIN TO DRAIN CHANNEL B UNLESS OTHERWISE NOTED.
11. DELETED.
12. AIR OPERATED CONTROL VALVE X-RV-5251 IS CLOSED. ITS ASSOCIATED SOLENOID VALVE IS DISCONNECTED. REFERENCE DWG E1-0465-21.
13. VENDOR SUPPLIED FLOW SWITCH RELOCATED OFF VENDOR SKID.
14. THE REVERSE OSMOSIS EQUIPMENT WILL NOT BE USED FOR WASTE PROCESSING. THE EQUIPMENT IS ABANDONED IN PLACE.
15. THREADED PIPE CAPS MAY BE ADDED OR REMOVED FROM CONNECTIONS REFERRING TO THIS NOTE ALONG WITH PIPING DOWNSTREAM OF VENT AND DRAIN VALVES IN ACCORDANCE WITH NOTE 24 ON DWG M1-0200.
16. WHEN LINES IN THE WASTE PROCESSING SYSTEM ARE NOT BEING USED FOR THE TRANSFER OF LIQUID CONTAINING CONCENTRATED BORIC ACID (UP TO 12% BY WEIGHT PER DRD-ME-0265), THE HEAT TRACING SET POINT MAY BE LOWER THAN 178 DEGREES F. SETPOINTS MAY BE SET FOR FREEZE PROTECTION WHEN THE LINE IS NOT IN USE, OR CONTAINS BORIC ACID SOLUTION (4% BY WEIGHT OR LESS).

REFERENCE NOTE:

THIS FLOW DIAGRAM HAS BEEN REDRAWN FROM WESTINGHOUSE DRAWING 1176830 SH 144 OF 4, REV. 5 WITH EXCEPTIONS AS FOLLOWS:

a. VALVES AND LINE NUMBERS HAVE BEEN ADDED.

b. CONTROL LOOPS HAVE BEEN DELETED EXCEPT FOR THE PRIMARY AND FINAL ELEMENTS. DETAIL OF THE CONTROL LOOPS WILL BE SHOWN ON INSTRUMENTATION AND CONTROL DIAGRAM.

c. PLANT SPECIFIC ADDITIONS TO THE ABOVE REFERRED WESTINGHOUSE DIAGRAM HAVE BEEN MADE.

FSAR FIGURE 11.2-5

THIS DRAWING CONFORMS TO ASME Y14.100

CLASS II

TXU ENERGY
CPSES
GLEN ROSE, TEXAS

FLOW DIAGRAM
LIQUID WASTE PROCESSING
DRAIN CHANNEL C

DWG. NO.	REV.
M1-0267	CP-29

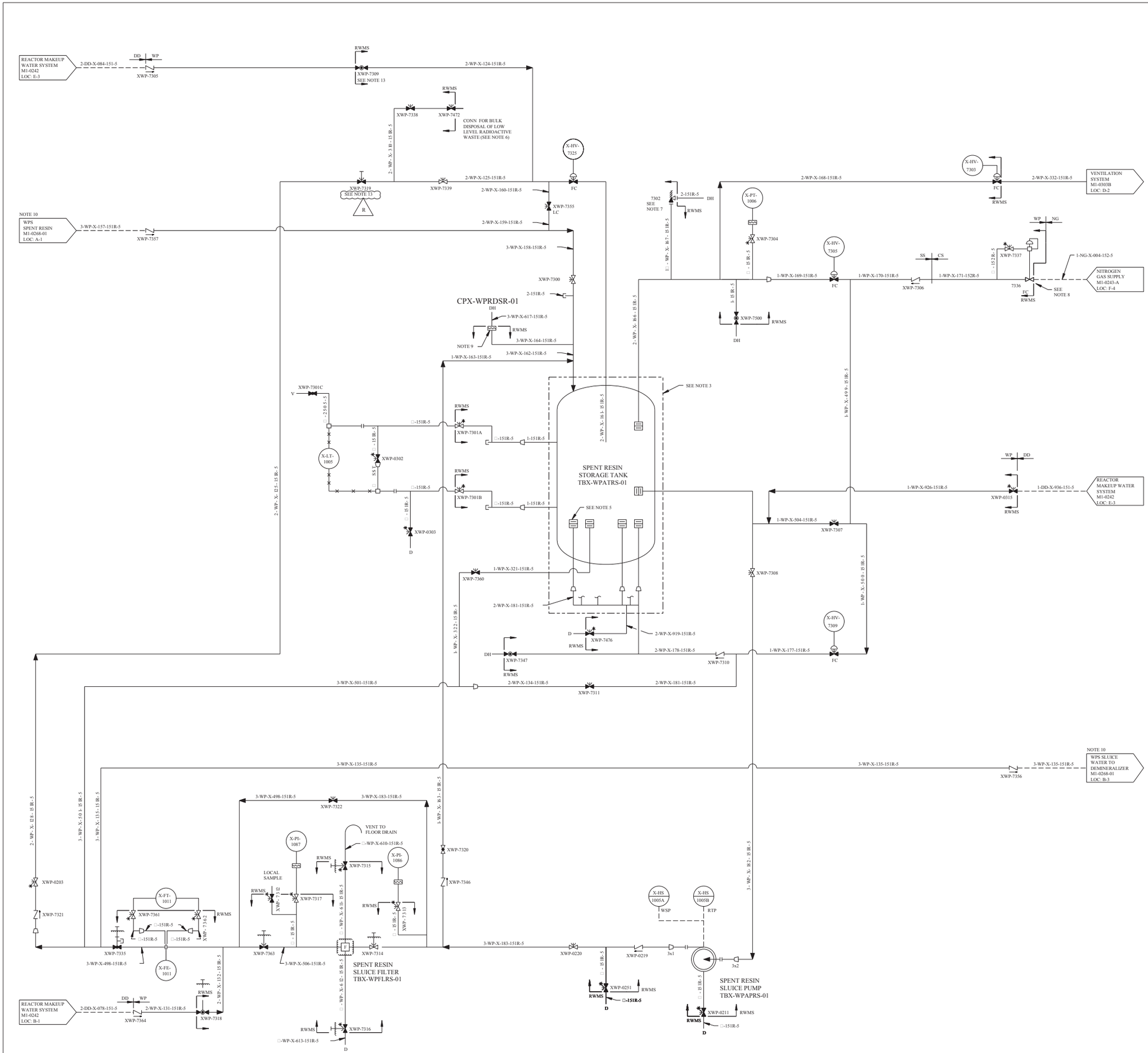

REV	DWN	CHK	APVD	REMARKS
CP-26	DLK 10-16-2013	MM 11-14-2013		THIS DRAWING REVISED TO INCORPORATE DESIGN CHANGE FDA 2013-000144-01-00 PER SK-0001-13-000144-01-00

NOTES:

1. FOR MECHANICAL SYMBOLS AND NOTES SEE DRAWING M1-0200.
2. TEMPERATURE SENSOR THERMETICALLY CONTROLLED HEATERS ARE SUPPLIED BY MANUFACTURER OF BATCHING TANK.
3. BOUNDARY ON SPENT RESIN TANK CUBICLE.
4. MAKE CONNECTIONS TOP SIDE OF HEADER, RUN VERTICAL FOR 18 INCHES.
5. TANK FURNISHED WITH SIX (6) □" AND ONE (1) SW CPLG SPARGER CONNECTIONS TO BE PIPED IN FIELD.
6. LOCATE BRANCH IN TOP OF MAIN HEADER.
7. LOCATE THIS VALVE CLOSE TO TANK.
8. LOCATE THIS VALVE CLOSE TO THE NITROGEN SUPPLY.
9. PROVIDE RUPTURE DISC WITH DIAMETER OF AT LEAST 1.5 IN., BURST PRESSURE LESS THAN 150 PSIG.
10. INDICATES RADIOACTIVE WASTE MANAGEMENT SYSTEM CONTINUES ON IDENTIFIED DRAWING.
11. DRAIN LINES ROUTED TO FLOOR DRAINS.
12. WSP = WASTE SOLIDIFICATION PANEL X-LV-13
    RTP = RESIN TRANSFER PANEL X-LV-12
13. VALVE XWP-7337 REMOTE CHAIN OPERATOR ATTACHMENT, REFERENCE FDA-2013-000144-01.

VALVE XWP-7337 REMOTE CHAIN OPERATOR ATTACHMENT, REFERENCE FDA-2013-000144-01.

R

GENERAL NOTE:

THIS FLOW DIAGRAM REDRAWN TO SEPARATE SYSTEM FUNCTION, FOR SOLIDIFICATION FUNCTION SEE M1-0268-02.

HISTORICAL NOTE:

THIS FLOW DIAGRAM HAS BEEN REDRAWN FROM WESTINGHOUSE DRAWING 1139E00 SH 2 OF 4 REV 3 WITH EXCEPTIONS AS FOLLOWS:

a. VALVES AND LINE NUMBERS HAVE BEEN ADDED.

b. CONTROL LOOPS HAVE BEEN DELETED EXCEPT FOR THE PRIMARY AND FINAL ELEMENTS. DETAIL OF THE CONTROL LOOPS WILL BE SHOWN ON INSTRUMENTATION AND CONTROL DIAGRAM.

c. PLANT SPECIFIC ADDITIONS TO THE ABOVE REFERENCED WESTINGHOUSE DIAGRAM HAVE BEEN MADE.

FSAR FIGURE 11.2-6

THIS DRAWING CREATED ELECTRONICALLY

CLASS II

LUMINANT
CPNPP
GLEN ROSE, TEXAS

FLOW DIAGRAM
LIQUID WASTE PROCESSING
SPENT RESIN HANDLING
SUBSYSTEM

DWG. NO.	SH. NO.	REV.
M1-0268	-	CP-26

< FINAL PRINT >

REF CKD 8/4/97 CP-19

$$$$$$$$DATE$$$$$$$

me472800.dgn M1-0268

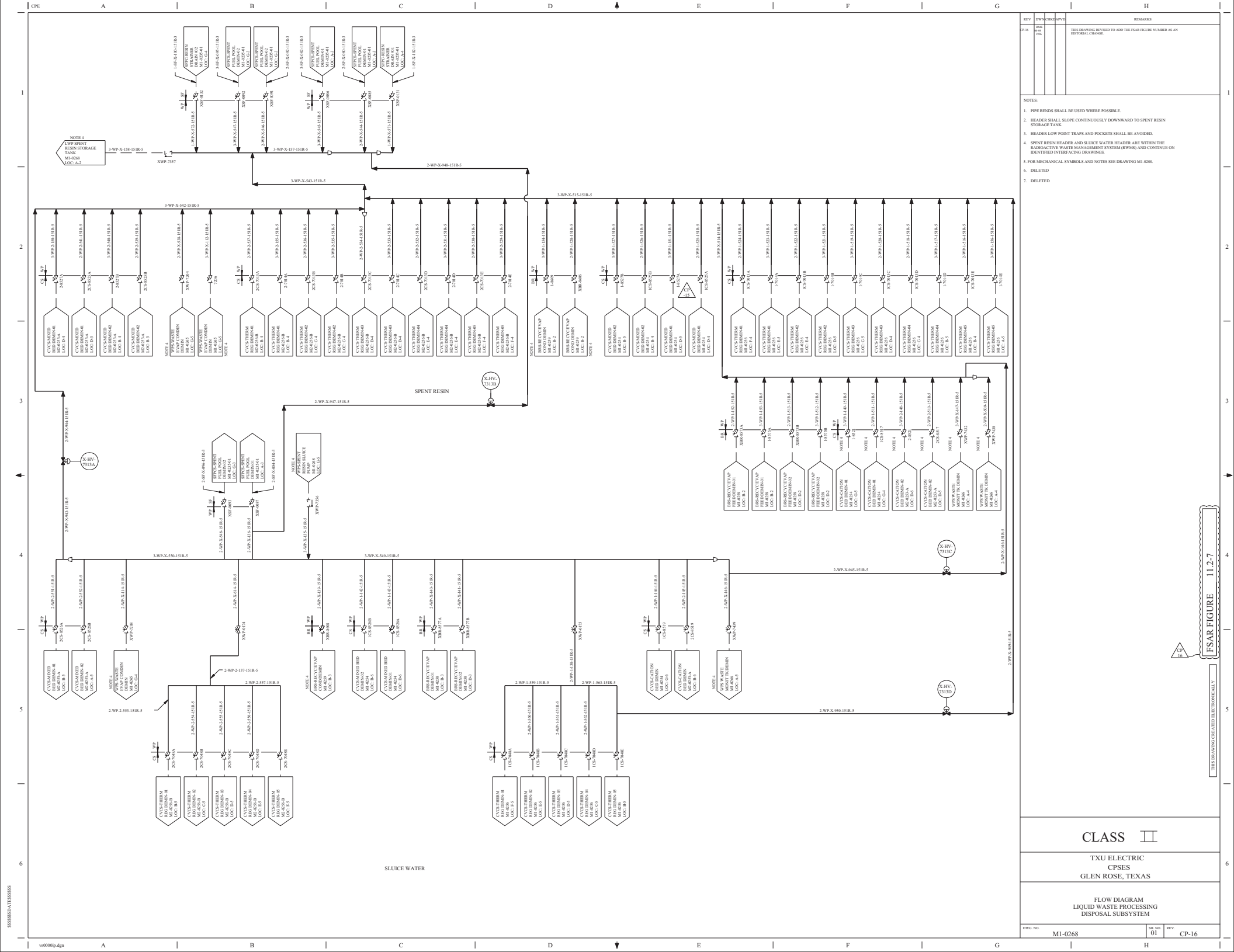
SPENT RESIN
SLUICE WATER
X-HV-7313A
X-HV-7313B
X-HV-7313C
X-HV-7313D
NOTE 4
LWP SPENT RESIN STORAGE TANK M1-0268 LOC. A-2
3-WP-X-158-151R-5
XWP-7357
3-WP-X-157-151R-5
3-WP-X-543-151R-5
2-WP-X-948-151R-5
3-WP-X-542-151R-5
3-WP-X-515-151R-5
2-WP-X-947-151R-5
2-WP-X-444-151R-5
2-WP-X-445-151R-5
3-WP-X-550-151R-5
3-WP-X-549-151R-5
2-WP-X-945-151R-5
2-WP-X-946-151R-5
2-WP-X-950-151R-5
2-WP-X-949-151R-5
2-WP-2-137-151R-5
2-WP-2-553-151R-5
2-WP-2-557-151R-5
2-WP-1-559-151R-5
2-WP-1-563-151R-5
SFPCS-SPENT FUEL POOL DEMIN-01 M1-0251-01 LOC. A-3
SFPCS-SPENT FUEL POOL DEMIN-02 M1-0251-01 LOC. A-4
SFPCS-SPENT FUEL POOL DEMIN-03 M1-0251-01 LOC. B-3
SFPCS-SPENT FUEL POOL DEMIN-04 M1-0251-01 LOC. B-4
SFPCS-SPENT FUEL POOL DEMIN-05 M1-0251-01 LOC. C-3
SFPCS-SPENT FUEL POOL DEMIN-06 M1-0251-01 LOC. C-4
SFPCS-SPENT FUEL POOL M1-0251-01 LOC. C-5
SFPCS-SPENT FUEL POOL M1-0251-01 LOC. C-6
SFPCS-RESIN STRAINER M1-0268 LOC. A-4
NOTE 4 WPS-SPENT RESIN SLUICE PUMP M1-0268 LOC. C-5
CVCS-MIXED BED DEMIN-01 M2-0253-A LOC. A-3
CVCS-MIXED BED DEMIN-02 M2-0253-A LOC. A-4
CVCS-MIXED BED DEMIN-03 M2-0253-A LOC. B-3
CVCS-MIXED BED DEMIN-04 M2-0253-A LOC. B-4
CVCS-MIXED BED DEMIN-05 M2-0253-A LOC. C-3
CVCS-MIXED BED DEMIN-06 M2-0253-A LOC. C-4
CVCS-MIXED BED DEMIN-01 M1-0254 LOC. A-4
CVCS-MIXED BED DEMIN-02 M1-0254 LOC. B-4
CVCS-MIXED BED DEMIN-03 M1-0254 LOC. C-4
CVCS-MIXED BED DEMIN-04 M1-0254 LOC. D-4
CVCS-MIXED BED DEMIN-01 M1-0253 LOC. C-5
CVCS-MIXED BED DEMIN-02 M1-0253 LOC. C-6
NOTE 4 WPS WASTE MOIST PK DEMIN M1-0256 LOC. A-5
CVCS-THERM REG DEMIN-01 M1-0256 LOC. A-3
CVCS-THERM REG DEMIN-02 M1-0256 LOC. A-4
CVCS-THERM REG DEMIN-03 M1-0256 LOC. B-3
CVCS-THERM REG DEMIN-04 M1-0256 LOC. B-4
CVCS-THERM REG DEMIN-05 M1-0256 LOC. C-3
CVCS-THERM REG DEMIN-06 M1-0256 LOC. C-4
CVCS-THERM REG DEMIN-01 M1-0256 LOC. D-4
CVCS-THERM REG DEMIN-02 M1-0256 LOC. E-3
CVCS-THERM REG DEMIN-03 M1-0256 LOC. E-4
CVCS-THERM REG DEMIN-04 M1-0256 LOC. F-3
CVCS-THERM REG DEMIN-05 M1-0256 LOC. F-4
CVCS-THERM REG DEMIN-01 M1-0256 LOC. F-3
CVCS-THERM REG DEMIN-02 M1-0256 LOC. F-4
CVCS-THERM REG DEMIN-03 M1-0256 LOC. D-3
CVCS-THERM REG DEMIN-04 M1-0256 LOC. D-4
CVCS-THERM REG DEMIN-05 M1-0256 LOC. E-3
CVCS-THERM REG DEMIN-06 M1-0256 LOC. E

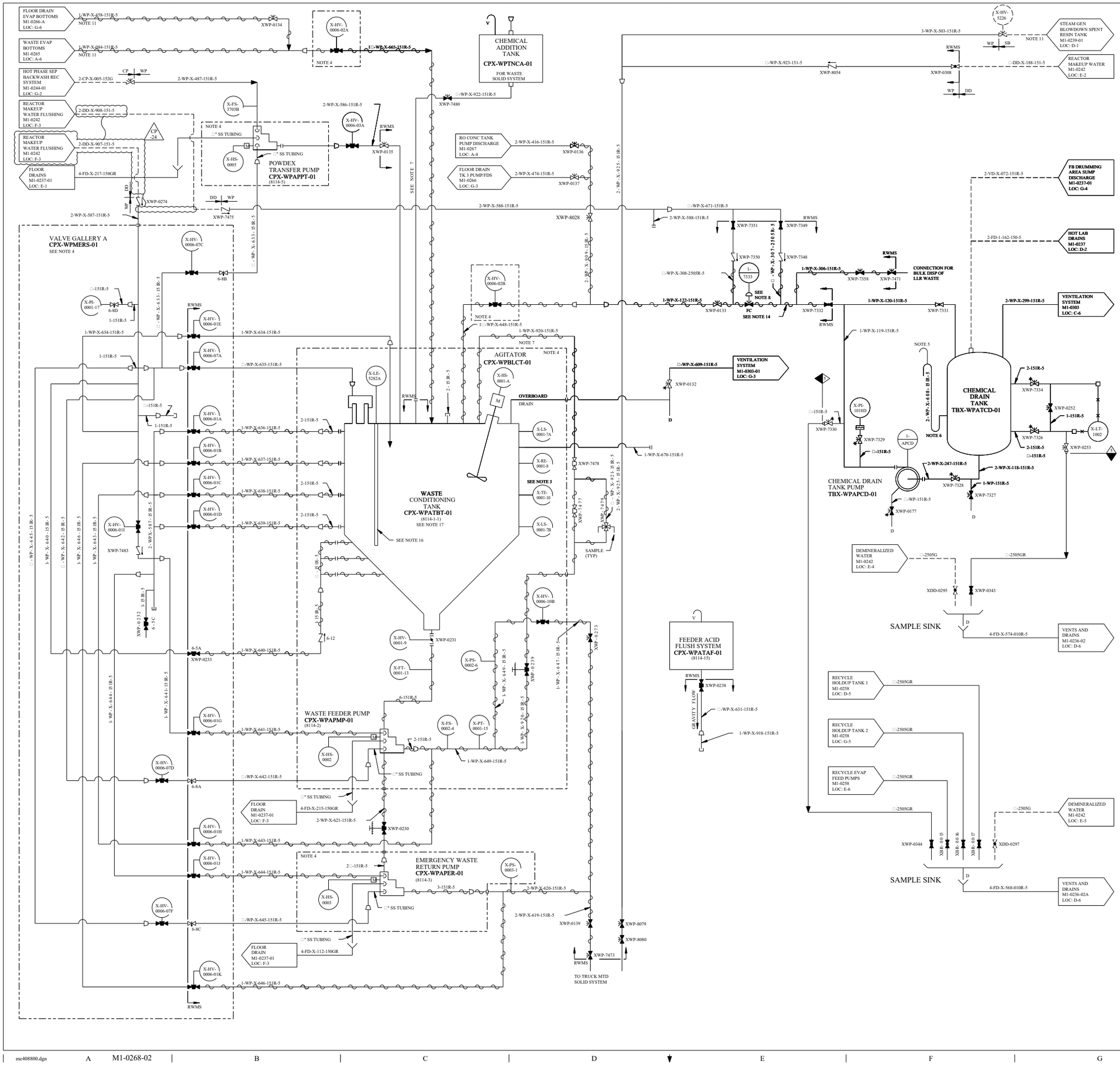

REV	DWN	CHKD	APVD	REMARKS
CP-24	DLK 09-06-2016	MM 09-06-2016	MHF 09-07-2016	THIS DRAWING REVISED TO INCORPORATE A1-CR-2016-007897-1.

NOTES:

1. FOR MECHANICAL SYMBOLS AND NOTES SEE DRAWING M1-0200.
2. DELETED
3. TEMPERATURE SENSOR THERMOSTATICALLY CONTROLLED HEATER IS SUPPLIED BY ATCOR.
4. EQUIPMENT AND PIPING WITHIN THE BOUNDARIES SHOWN IS SUPPLIED BY ATCOR.
5. SIPHON LOCATED AT TOP OF LOOP.
6. LOWER LOOP TO EXTEND 12 INCHES BELOW OVERFLOW AND TOP LOOP TO TOP OF TANK.
7. CONNECTION INTO TANK AND PIPING PROVIDED BY PURCHASER.
8. LOCATE FLUSH CONNECTIONS AS CLOSE TO VALVE AS POSSIBLE.
9. EQUIPMENT ON THIS DRAWING IS COMMON TO UNIT 1 AND 2.
10. LEVEL INSTRUMENT IS FURNISHED BY TANK SUPPLIER.
11. INDICATES RADIOACTIVE WASTE MANAGEMENT SYSTEM CONTINUES ON IDENTIFIED DRAWING.
12. EMERGENCY WASTE RETURN PUMP PROVIDED TO RETURN:
    a. SPENT RESINS TO RESPECTIVE SPENT RESIN STORAGE TANK.
    b. CHEMICAL DRAIN LIQUIDS TO THE CHEMICAL DRAIN TANK.
    c. EVAPORATOR BOTTOMS AND POWDEX RESIN TO THE TRUCK CONNECTION.
13. UNLESS OTHERWISE NOTED DRAINS TO BE LOCALLY COLLECTED UNDER ADMINISTRATIVE CONTROL.
14. HEAT TRACE AND INSULATE LINE IN THE FUEL BUILDING AND AUXILIARY BUILDING WHERE ACCESSIBLE.
15. DELETED
16. X-LE-5282A SUPPLIED BY FLUID COMPONENT INCORPORATED UNDER PO 665-71225.
17. WHEN LINES IN THE WASTE PROCESSING SYSTEM ARE NOT BEING USED FOR THE TRANSFER OF LIQUID CONTAINING CONCENTRATED BORIC ACID (UP TO 12% BY WEIGHT PER DBD-ME-0264), THE HEAT TRACING SET POINT MAY BE LOWER THAN 170 DEGREES F. SETPOINTS MAY BE SET FOR FREEZE PROTECTION WHEN THE LINE IS NOT IN USE, OR CONTAINS BORIC ACID SOLUTION (4% BY WEIGHT OR LESS).

REFERENCE NOTE:

THIS FLOW DIAGRAM HAS BEEN REDRAWN FROM WESTINGHOUSE DRAWING 1139E00, SH 2 OF 4, REV. 3 WITH EXCEPTIONS AS FOLLOWS:

a. VALVES AND LINE NUMBERS HAVE BEEN ADDED.

b. CONTROL LOOPS HAVE BEEN DELETED EXCEPT FOR THE PRIMARY AND FINAL ELEMENTS. DETAIL OF THE CONTROL LOOPS WILL BE SHOWN ON INSTRUMENTATION AND CONTROL DIAGRAMS.

c. PLANT SPECIFIC ADDITIONS TO THE ABOVE REFERENCED WESTINGHOUSE DIAGRAM HAVE BEEN MADE.

GENERAL NOTE:

THIS FLOW DIAGRAM PREPARED TO INCLUDE THE CONTENTS OF ATCOR FLOW DIAGRAM 8114-D-01 AND THE RADIOACTIVE WASTE SOLIDIFICATION SYSTEM FROM DRAWING M1-0268, CP-3.

FSAR FIGURE 11.2-8

THIS DRAWING CREATED ELECTRONICALLY

CLASS II

LUMINANT
CPNPP
GLEN ROSE, TEXAS

FLOW DIAGRAM
LIQUID WASTE PROCESSING
DISPOSAL SUBSYSTEM

DWG. NO.	SH. NO.	REV.
M1-0268	02	CP-24

REV	DWN	CHK	APVD	REMARKS
CP-5	DLK 12-09 2010			THIS DRAWING REVISED TO INCORPORATE EDITORIAL CHANGE AS NOTED AND AI-2010-011019-1.

NOTES:

1. FOR MECHANICAL SYMBOLS AND NOTES SEE DRAWING M1-0200.
2. UNLESS OTHERWISE NOTED, DRAINS COLLECTED BY LOCAL DRAINS SYSTEM.
3. ALL PIPING AND/OR TUBING DOWNSTREAM OF ROOT, SAMPLE, VENT OR DRAIN VALVES ARE EXEMPT FROM THE REQUIREMENTS OF 2323-MS-100, APPENDIX D, SECTION III.
4. INDICATES RADIOACTIVE WASTE MANAGEMENT SYSTEM CONTINUES ON IDENTIFIED DRAWING.

MANWAY
1/2 "
1/2 "
2 1/2 -WP-X-975-151GR
2 1/2 -WP-X-975-151R-5
1-WP-X-982-151R-5
RWMS
XWP-0414
XWP-0415
CHEMICAL ADDITION
MIXING TEE
3/4 -151R-5
XWP-0413
RWMS
3/8 -2505-5
EFFLUENT SAMPLE SINK THIS DRAWING LOC: E-6
X-PI-5300A
RWMS
XWP-0410
XWP-0407
3/4 -151R-5
XWP-0405
XWP-0404
XWP-0406
3X1 1/2
2 1/2 X1
4-WP-X-973-151GR
3-WP-X-967-151GR
3-WP-X-967-151R-5
XWP-0402
XWP-0403
4-WP-X-976-151GR
PLANT EFFLUENT HOLDUP AND MONITOR TANK CPX-WPTNPE-01
PLANT EFFLUENT HOLDUP AND MONITOR PUMP CPX-WPPMPE-01
HOLDUP AND MONITOR TK 2 THIS DWG LOC: D-6
X-LI-5300A
X-LS-5300A
X-LS-5300C
X-LS-5300E
2-WP-X-977-151R-5
RWMS
RWMS
XWP-0409
1-151R-5
XWP-0408
2-WP-X-978-151R-5
FUEL BLDG SUMP 2 M1-0237-01 LOC: F-3
2-WP-X-978-151GR
RWMS
4-WP-X-976-151R-5
FUEL BLDG SUMP 2 M1-0237-01 LOC: F-3
4-WP-X-976-151GR
X-HV-5300-1
XWP-0401
2-WP-X-979-151GR
2-WP-X-979-151R-5
FLUSH CONN 1-151R-5
RWMS
XWP-0442
NOTE 4
FILTER DEMIN SYSTEM M1-0266 LOC: D-3
XWP-0400
2-WP-X-980-151R-5
2-WP-X-980-151R-5
3-WP-X-986-151R-5
2 1/2 -WP-X-968-151R-5
V
RWMS
XWP-0412
3/4 -151R-5
DISCHARGE M1-0266 LOC: G-6
NOTE 4
XWP-0435 LC
X-FT-5300
RWMS
XWP-0434
XWP-0433
3/4 X 1/2
3/4 X 1/2
X-FE-5300
2-WP-X-969-151R-5
1/2 -151R-5
1/2 -151R-5
2 1/2 -WP-X-968-151R-5
2-WP-X-970-151R-5
XWP-0436
XWP-0445
FILTER DEMIN SYSTEM M1-0266 LOC: E-3
CP -5
NOTE 4
3/4 -151R-5
XWP-0446
RWMS
D
X-HV-5300-2
XWP-0420
2-WP-X-972-151GR
2-WP-X-972-151R-5
XWP-0429
2 1/2 -WP-X-985-151R-5
4-WP-X-983-151GR
4-WP-X-973-151R-5
FUEL BLDG VENT DUCT M1-0303-01 LOC: F-5
RWMS
MANWAY
1/2 "
1/2 "
2 1/2 -WP-X-974-151GR
2 1/2 -WP-X-974-151R-5
1-WP-X-981-151R-5
RWMS
XWP-0431
XWP-0432
CHEMICAL ADDITION
MIXING TEE
3/4 -151R-5
XWP-0430
RWMS
3/8 -2505-5
X-PI-5300B
RWMS
XWP-0439
XWP-0426
3/4 -151R-5
XWP-0424
XWP-0423
XWP-0425
1/2 " PLUG
TC
2 1/2 X1
3X1 1/2
4-WP-X-984-151GR
3-WP-X-971-151GR
3-WP-X-971-151R-5
XWP-0421
XWP-0422
PLANT EFFLUENT HOLDUP AND MONITOR TANK CPX-WPTNPE-02
PLANT EFFLUENT HOLDUP AND MONITOR PUMP CPX-WPPMPE-02
X-LI-5300B
X-LS-5300B
X-LS-5300D
X-LS-5300F
RWMS
XWP-0428
1-151R-5
2-WP-X-977-151R-5
XWP-0427
RWMS
2-WP-X-977-151GR
THIS DWG LOC: C-2
THIS DRAWING LOC: G-2
3/8 -2505-5
DEMINERALIZED WATER M1-0242-A LOC: G-1
3/8 -2505-5
XDD-0413 (RED)
XWP-0443
XWP-0444
EFFLUENT SAMPLE SINK
D
VENTS AND DRAINS M1-0237-01 LOC: F-4
YARD
FUEL BUILDING
151GR
151R-5

DRAWING M1-0266 REV CP-20
HAS BEEN SPLIT INTO THE FOLLOWING SHEETS:
M1-0266
M1-0266-B

FSAR FIGURE 11.2-9

THIS DRAWING CREATED ELECTRONICALLY

CLASS II

LUMINANT
CPNPP
GLEN ROSE, TEXAS

FLOW DIAGRAM
PLANT EFFLUENT
HOLDUP AND MONITOR TANKS

DWG. NO. M1-0266 | SH. NO. B | REV. CP-5

me0007pa.dgn A M1-0266-B FINAL PRINT

REV	DWN	CHKD	APVD	REMARKS
CP-24	MM 08-01 2011	DRM 08-11 2011		THIS DRAWING REVISED TO INCORPORATE DESIGN CHANGE FDA-2011-000130-01-00 PER SK-0005-11-000130-01-00. EDITORIAL CHANGES AS NOTED.

NOTES:

1. FOR GENERAL NOTES AND SYMBOLS SEE DRAWING M1-0200.
2. DRAWING IS COMMON TO UNITS 1 AND 2.
3. WASTE GAS COMPRESSOR PACKAGE TBX-GHAPCP-01 BY THE NASH ENG CO DRAWING 75-0044 SHEET 02.
4. WASTE GAS COMPRESSOR PACKAGE TBX-GHAPCP-02 BY THE NASH ENG CO DRAWING 75-0044 SHEET 03.
5. DENOTES RADIOACTIVE WASTE MANAGEMENT SYSTEM CONTINUES ON IDENTIFIED DRAWING.

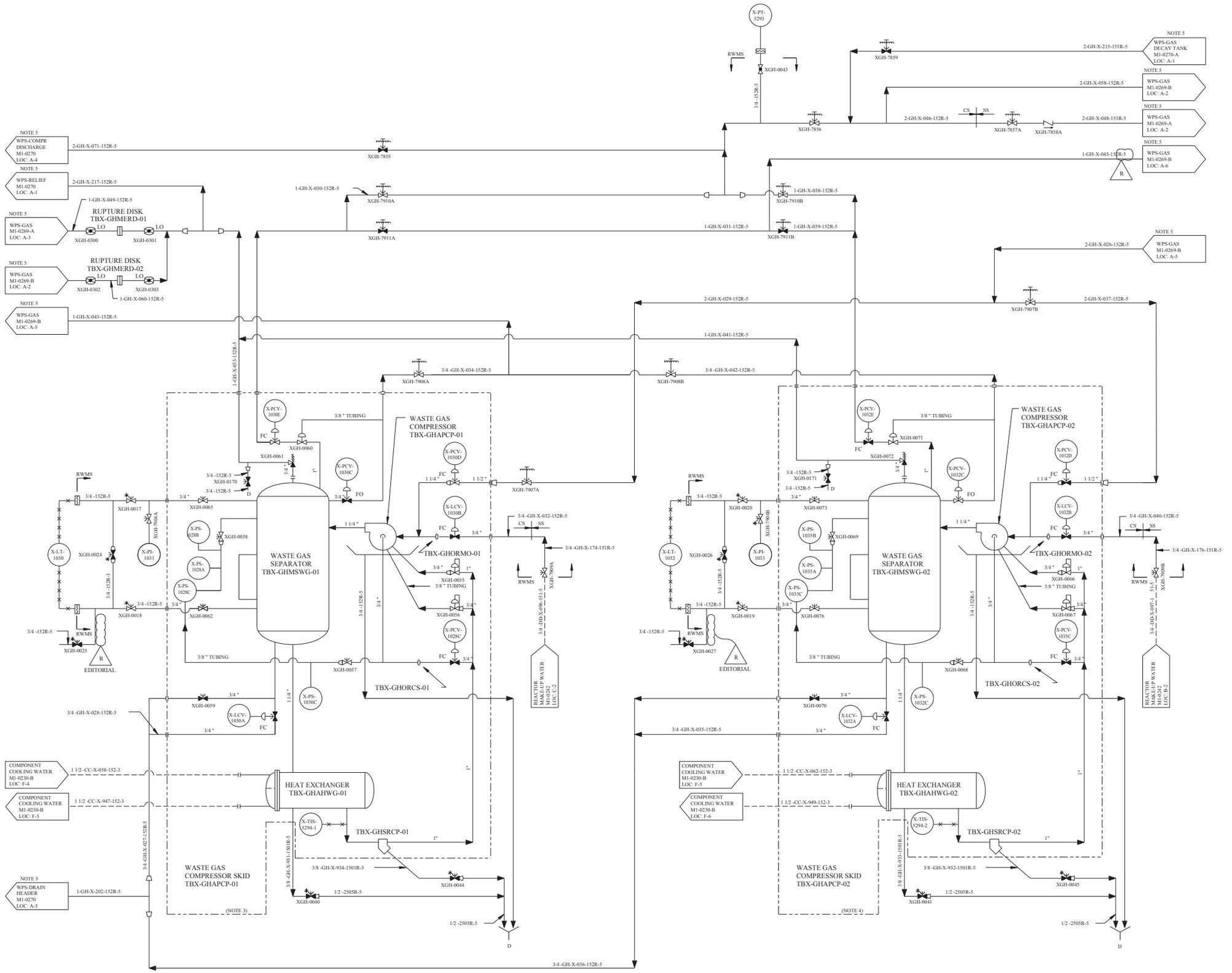

FSAR FIGURE 11.3-1

THIS DRAWING CREATED ELECTRONICALLY

DRAWING 2323-M1-0269 REV CP-10
HAS BEEN SPLIT INTO THE FOLLOWING SHEETS:
M1-0269
M1-0269 SH A
M1-0269 SH B

CLASS II

LUMINANT
CPNPP
GLEN ROSE, TEXAS

FLOW DIAGRAM
WASTE PROCESSING
SYSTEM (GAS)

DWG. NO. M1-0269 | SH. NO. - | REV. CP-24

FINAL PRINT

REF CKD 10/9/97 CP-22

me103670.dgn M1-0269

REV	DWN	CHKD	APVD	REMARKS
CP-19	JRMC 08-04 2014	DJL 08-04 2014		THIS DRAWING REVISED TO INCORPORATE DESIGN CHANGE FDA 2014-000152-01-00 PER SK-0001-14-000152-01-00.

NOTES:

1. FOR GENERAL NOTES AND SYMBOLS SEE DRAWING M1-0200.
2. DRAWING IS COMMON TO UNITS 1 AND 2.
3. CATALYTIC RECOMBINER TBX-GHRECA-01 AND GAS ANALYZER RACK TBX-GHAZGR-01 BY AIR PRODUCTS DRAWING 00-1-2403-55.10 SH 3 AND 4, CP-2, CP-0001 S/0-230.
4. CATALYTIC RECOMBINERS TERMINAL POINTS COORDINATED WITH AIR PRODUCTS DRAWING 300044 CP-0001 S/0-230.
5. DENOTES RADIOACTIVE WASTE MANAGEMENT SYSTEM CONTINUES ON IDENTIFIED DRAWINGS.
6. CHEMICAL DRAIN TO BE UNDER ADMINISTRATIVE CONTROL AND NORMALLY ROUTED TO A "RAD" DRAIN.
7. FOR ADDITIONAL INFORMATION ON ZERO GAS AND PURGE GAS TO ANALYZERS AND BOTTLE RACKS, SEE VENDOR TECHNICAL MANUAL CP-0001-011 AND -012
8. CHEMICAL DRAIN TO BE UNDER ADMINISTRATIVE CONTROL AND NORMALLY ROUTED TO A "NON-RAD" DRAIN.

FSAR FIGURE 11.3 - 1

THIS DRAWING CREATED ELECTRONICALLY

DRAWING 2323-M1-0269 REV CP-10
HAS BEEN SPLIT INTO THE FOLLOWING SHEETS:
M1-0269
M1-0269-A
M1-0269-B

CLASS II

LUMINANT
CPNPP
GLEN ROSE, TEXAS

FLOW DIAGRAM
WASTE PROCESSING
SYSTEM (GAS)

DWG. NO. M1-0269 | SH. NO. A | REV. CP-19

SSSSSSSDATESSSSSS REF CKD 8/ 19/ 97 CP-13

me610400.dgn A M1-0269-A B C D E F G < FINAL PRINT > H

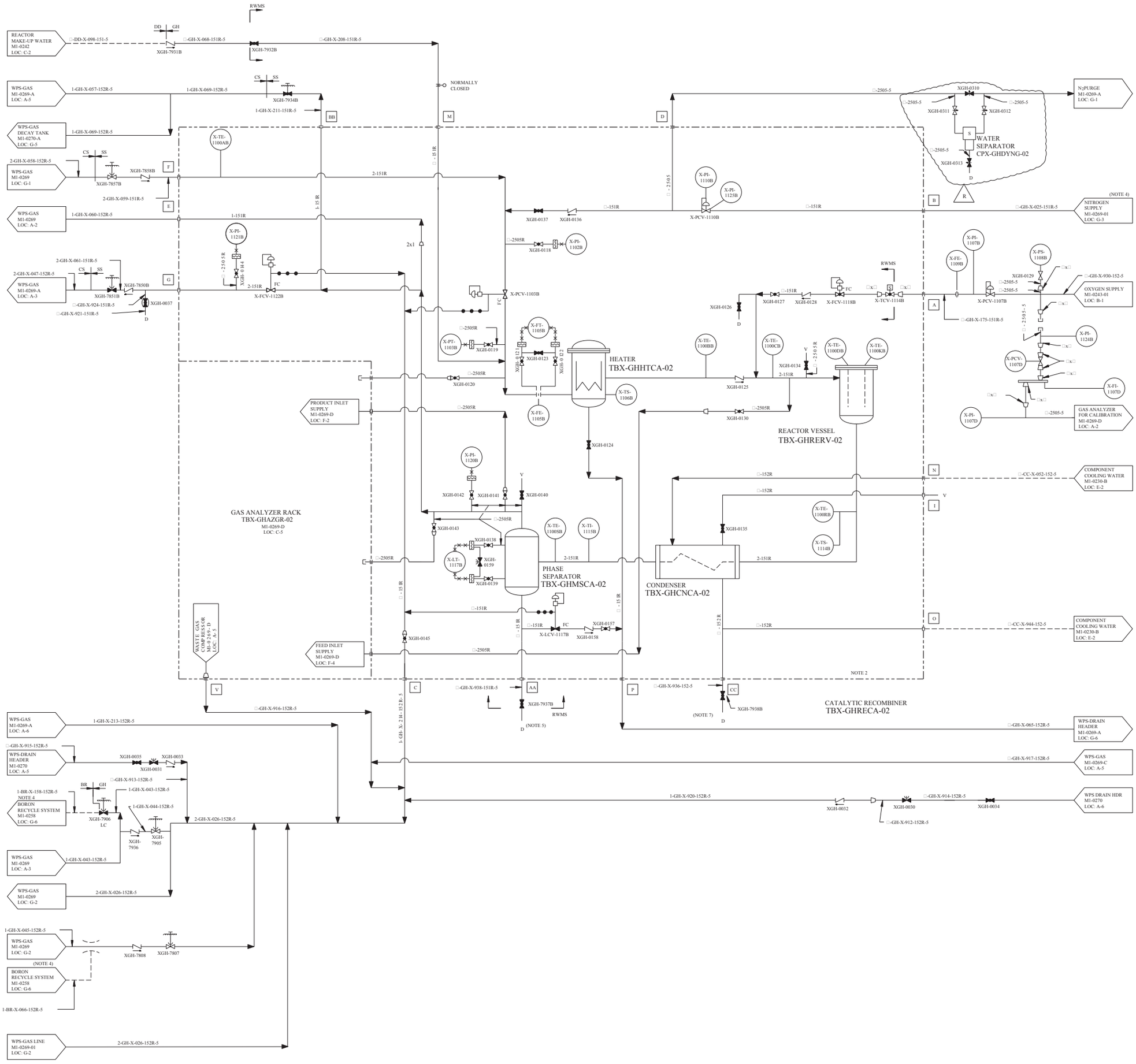

REV	DWN	CHKD	APVD	REMARKS
CP-21	JRMC 06-04 2014	DJL 06-04 2014		THIS DRAWING REVISED TO INCORPORATE DESIGN CHANGE FDA-2014-000152-01-00 PER SK-0002-14-000152-01-00.

NOTES:

1. DELETED
2. CATALYTIC RECOMBINER TBX-GHRECA-02 AND GAS ANALYZER RACK TBX-GHAZGR-02 BY AIR PRODUCTS DRAWING 00-1-2403-55.10 SHEETS 5 AND 6. CP-2, CP-0001 S/0-230.
3. CATALYTIC RECOMBINERS TERMINAL POINTS . COORDINATED WITH AIR PRODUCTS DRAWING NO 300044 CP-0001 S/0-230.
4. DENOTES RADIOACTIVE WASTE MANAGEMENT SYSTEM CONTINUES ON IDENTIFIED DRAWING.
5. CHEMICAL DRAIN TO BE UNDER ADMINISTRATIVE CONTROL AND NORMALLY ROUTED TO A "RAD" DRAIN.
6. FOR GENERAL NOTES AND SYMBOLS SEE DRAWING M1-0200.
7. CHEMICAL DRAIN TO BE UNDER ADMINISTRATIVE CONTROL AND NORMALLY ROUTED TO A "NON-RAD" DRAIN.

FSAR FIGURE 11.3 - 1

THIS DRAWING CREATED ELECTRONICALLY

DRAWING 2323-M1-0269 REV CP-10
HAS BEEN SPLIT INTO THE FOLLOWING SHEETS:

M1-0269
M1-0269 SH A
M1-0269 SH B

CLASS II

LUMINANT
CPNPP
GLEN ROSE, TEXAS

FLOW DIAGRAM
WASTE PROCESSING
SYSTEM (GAS)

DWG. NO.	SH. NO.	REV.
M1-0269	B	CP-21

REF CKD 8/19/97 CP-15

$$$$$$$ DATE $$$$$$$

me103630.dgn A M1-0269-B

< FINAL PRINT >

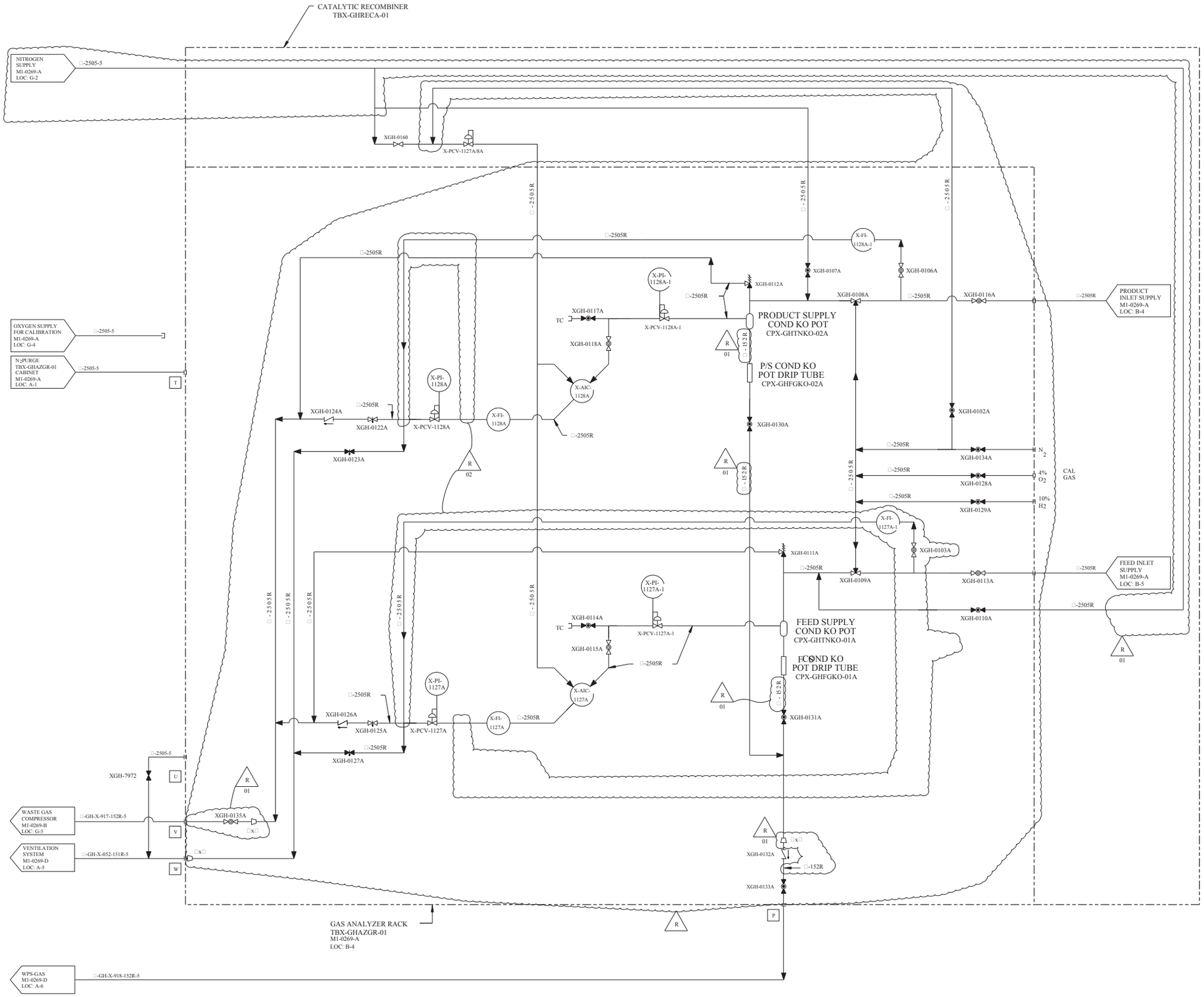

REV	DWN	CHKD	APVD	REMARKS
CP-1	SJL 09-16 2002	DJL 09-17 2002		THIS DRAWING CREATED TO INCORPORATE DESIGN CHANGE FDA-1999-001202-01-03 PER SK-0003-99-001202-01-02.

NOTES

1. FOR GENERAL NOTES AND SYMBOLS SEE DRAWING M1-0200.
2. DRAWING IS COMMON TO UNITS 1 AND 2.
3. CATALYTIC RECOMBINER TBX-GHRECA-01 AND GAS ANALYZER RACK TBX-GHAZGR-01 BY AIR PRODUCTS DRAWING 00-1-2403-55.10.
4. CATALYTIC RECOMBINERS TERMINAL POINTS COORDINATED WITH AIR PRODUCTS DRAWING 300044.

FSAR FIGURE 11.3-1

THIS DRAWING CREATED ELECTRONICALLY

DRAWING M1-0269-A REV CP-14
HAS BEEN SPLIT INTO THE FOLLOWING SHEETS:
M1-0269-A
M1-0269-C

CLASS II

LUMINANT
CPNPP
GLEN ROSE, TEXAS

FLOW DIAGRAM
WASTE PROCESSING
SYSTEM (GAS)

DWG. NO. M1-0269 | SH. NO. C | REV. CP-1

$$$$$$$DATE$$$$$$ REF CHKD 03/20/2001

me423800.dgn A M1-0269-C

< FINAL PRINT >

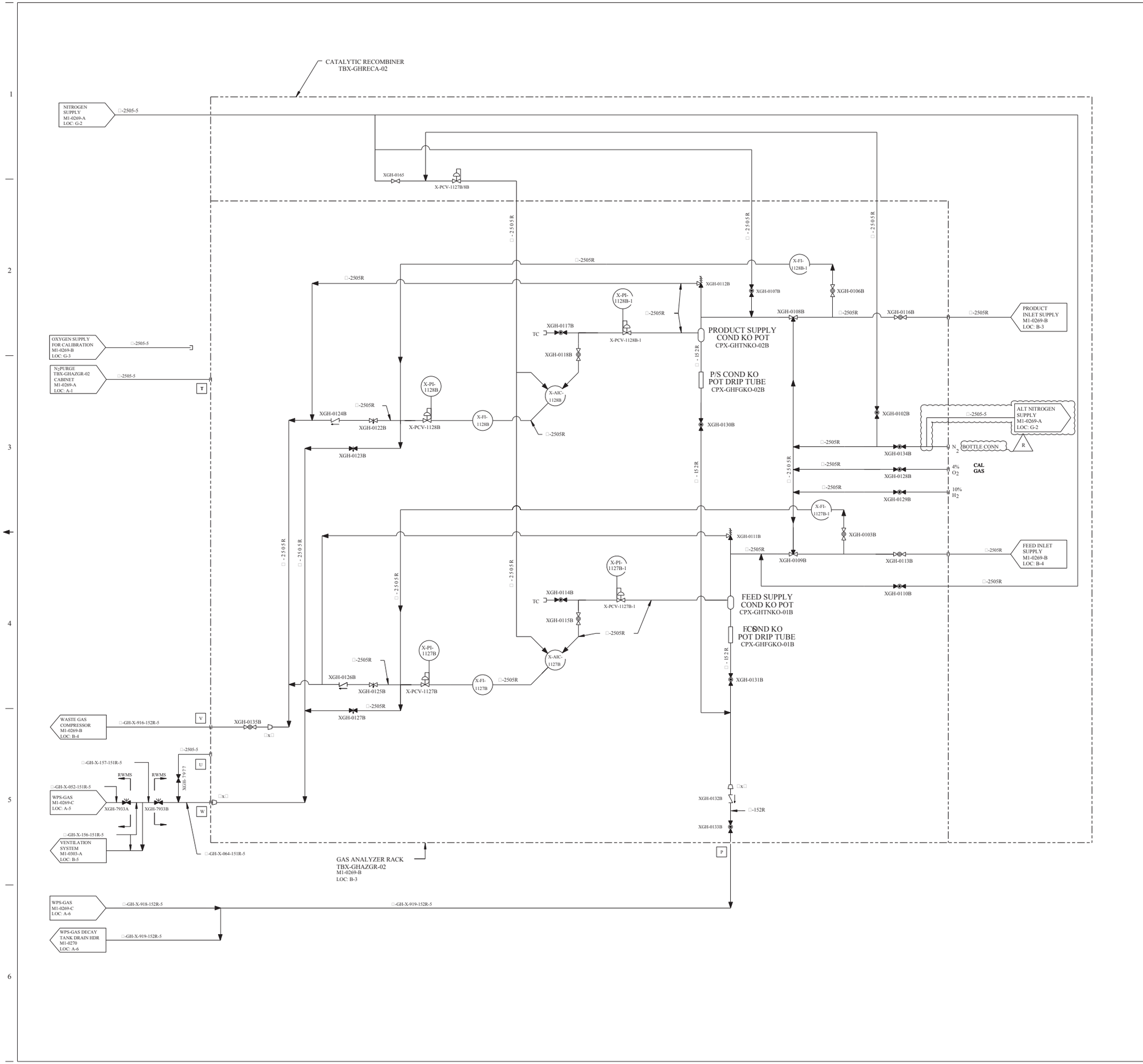

REV	DWN	CHKD	APVD	REMARKS
CP-2	DLK 04-25 2014	MHF 04-25 2014		THIS DRAWING REVISED TO INCORPORATE DESIGN CHANGE FDA 2014-000106-01-00 PER SK-0001-14-000106-01-00.

NOTES:

1. FOR GENERAL NOTES AND SYMBOLS SEE DRAWING M1-0200.
2. DRAWING IS COMMON TO UNITS 1 AND 2.
3. CATALYTIC RECOMBINER TBX-GHRECA-02 AND GAS ANALYZER RACK TBX-GHAZGR-02 BY AIR PRODUCTS DRAWING 00-1-2403-55.10.
4. CATALYTIC RECOMBINERS TERMINAL POINTS COORDINATED WITH AIR PRODUCTS DRAWING 300044.

FSAR FIGURE 11.3 - 1

THIS DRAWING CREATED ELECTRONICALLY

DRAWING M1-0269-B REV CP-16
HAS BEEN SPLIT INTO THE FOLLOWING SHEETS:
M1-0269-B
M1-0269-D

CLASS II

LUMINANT
CPNPP
GLEN ROSE, TEXAS

FLOW DIAGRAM
WASTE PROCESSING
SYSTEM (GAS)

DWG. NO. M1-0269 | SH. NO. D | REV. CP-2

< FINAL PRINT >

me445200.dgn M1-0269-D

$$$$$$$DATE$$$$$$ REF CHKD 3/22/2001

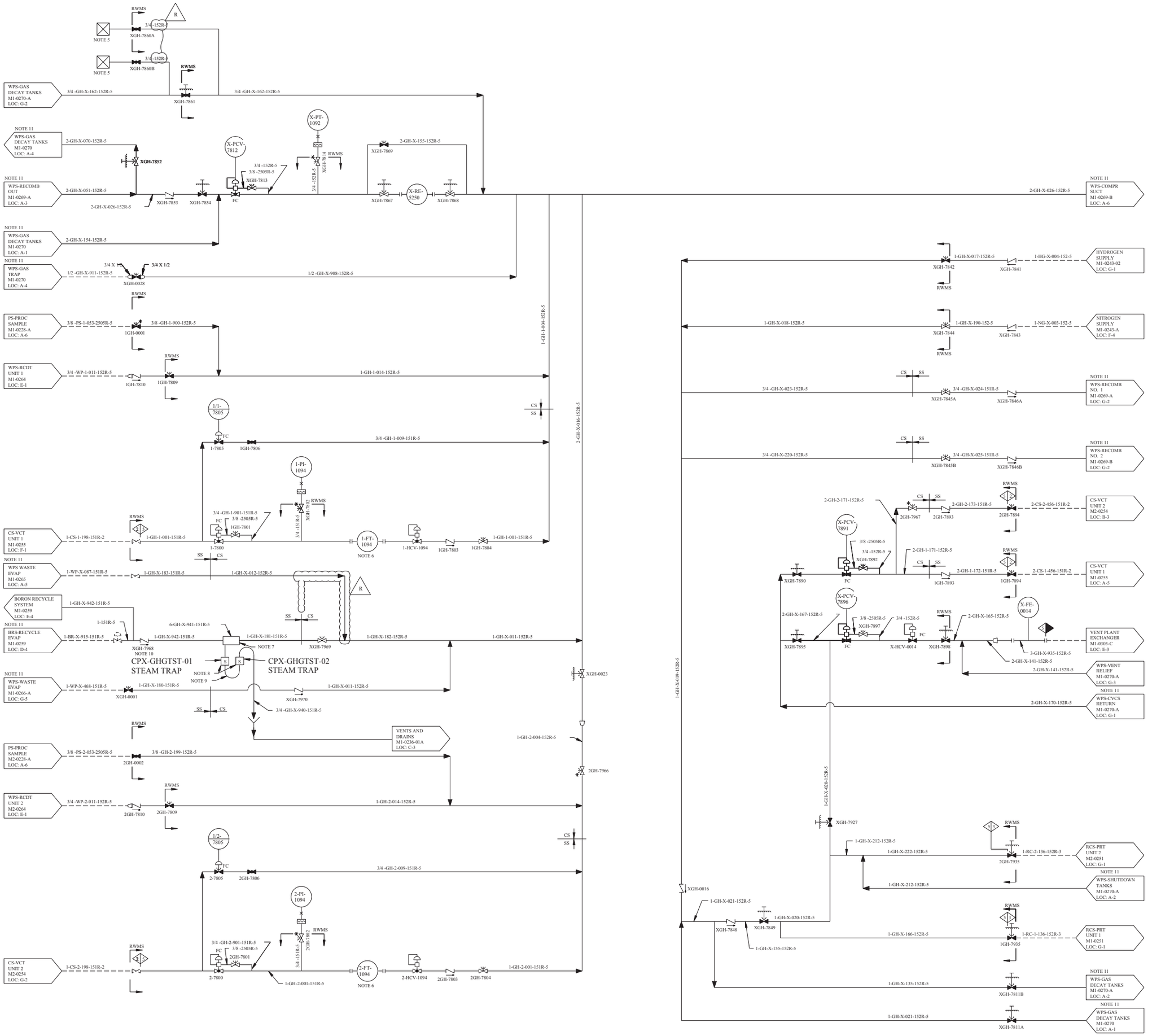

REV	DWN	CHK	APVD	REMARKS
CP-22	MM 08-15-2011	DLK 09-19-2011		THIS DRAWING REVISED TO INCORPORATE DESIGN CHANGE FDA-2011-000130-01-00 PER SK-0006-11-000130-01-00.

NOTES:

1. FOR GENERAL NOTES AND SYMBOLS SEE DRAWING M1-0200.
2. DRAWING IS COMMON TO UNITS 1 AND 2.
3. FLOW DIAGRAM REDRAWN FROM WESTINGHOUSE DRAWING 114E71 SHEET 1, R-5 AND 114E71 SHEET 2, R-5.
4. GH-SYSTEM IS WITHIN RADIOACTIVE WASTE MANAGEMENT SYSTEM BOUNDARIES.
5. WELDED COUPLINGS AND TUBING ADAPTER TO RECEIVE PLANT GAS SAMPLING VESSEL.
6. PROTECT TURBINE METER FROM CONDENSATE DRAINAGE BY INSTALLING AT A LOCAL HIGH POINT; SLOPE INLET AND OUTLET PIPING DOWNWARD FROM METER.
7. VAPOR/LIQUID SEPARATOR FIELD FABRICATED FROM 6" DIA x 12" SS PIPE SECTION. INSTALLED HORIZONTAL AT ELEVATION 822'-8".
8. BALL FLOAT STEAM TRAPS (SUBMERGED).
9. 8'-0" DEPTH LOOP SEAL. TOP OF LOOP SEAL 1'-0" BELOW VAPOR/ LIQUID SEPARATOR AND 1'-0" ABOVE STEAM TRAPS.
10. REMOVE INTERNAL SPRING FROM XGH-7968 .
11. DENOTES RADIOACTIVE WASTE MANAGEMENT SYSTEM CONTINUES ON IDENTIFIED DRAWING.

FSAR FIGURE 11.3-1

THIS DRAWING CREATED ELECTRONICALLY

CLASS I
(NUCLEAR SAFETY-RELATED)
SAFETY CLASS 1 — SEISMIC CATEGORY I
SAFETY CLASS 2 — CLASS 1E
SAFETY CLASS 3 — ASSOCIATED CIRCUITS

LUMINANT
CPNPP
GLEN ROSE, TEXAS

FLOW DIAGRAM
WASTE PROCESSING SYSTEM
(GAS)

DWG. NO.	SH. NO.	REV.
M1-0269	01	CP-22

FINAL PRINT

REF CKD 10/20/97 CP-21

me103610.dgn A M1-0269-01

WPS-VENT RELIEF M1-0269-01 LOC: G-6
1-GH-X-021-152R-5
WPS-RELIEF HEADER M1-0269 LOC: A-2
2-GH-X-217-152R-5
WPS-RAD MONITOR M1-0269-01 LOC: A-2
2-GH-X-154-152R-5
XGH-7815
XGH-7816
XGH-7825
XGH-7824
2-GH-X-105-152R-5
2-GH-X-116-152R-5
2-GH-X-944-152R-5
3/4 -GH-X-162-152R-5
3/4 -GH-X-088-152R-5
3/4 -GH-X-095-152R-5
3/4 -GH-X-102-152R-5
2-GH-X-109-152R-5
2-GH-X-116-152R-5
WPS RELIEF M1-0270-A LOC: A-6
2-GH-X-154-152R-5
WPS-CVCS RETURN M1-0270-A LOC: A-1
XGH-7835
XGH-7834
2-GH-X-136-152R-5
WPS-H 2 SUPPLY M1-0270-A LOC: A-3
3/4 -GH-X-112-152R-5
WPS-SAMPLE SYSTEM M1-0270-A LOC: A-2
2-GH-X-082-152R-3
XGH-0006
RWMS
XGH-7817A
2-GH-X-089-152R-3
XGH-0007
XGH-7817B
2-GH-X-096-152R-3
XGH-0008
XGH-7817C
2-GH-X-103-152R-3
XGH-0009
XGH-7817D
2-GH-X-110-152R-3
XGH-0010
XGH-7827A
2-GH-X-219-152R-5
2-GH-X-085-152R-5
2-GH-X-092-152R-5
2-GH-X-099-152R-5
2-GH-X-109-152R-5
1-GH-X-904-152R-3
1-GH-X-905-152R-3
1-GH-X-902-152R-3
1-GH-X-903-152R-3
1-GH-X-900-152R-3
2x1
3/4 -GH-X-080-153R-3
3/4 -GH-X-087-153R-3
3/4 -GH-X-094-153R-3
3/4 -GH-X-101-153R-3
3/4 -GH-X-111-153R-3
XGH-7821A
XGH-7821B
XGH-7821C
XGH-7821D
XGH-7831A
X-PT-1036
X-PT-1037
X-PT-1038
X-PT-1039
X-PT-1052
3/4 -152R-3
XGH-7822A
XGH-7822B
XGH-7822C
XGH-7822D
XGH-7832A
1-GH-X-077-152R-3
1-GH-X-084-152R-3
1-GH-X-091-152R-3
1-GH-X-098-152R-3
1-GH-X-108-152R-3
GAS DECAY TANK 1 TBX-GHATGD-01
GAS DECAY TANK 2 TBX-GHATGD-02
GAS DECAY TANK 3 TBX-GHATGD-03
GAS DECAY TANK 4 TBX-GHATGD-04
GAS DECAY TANK 5 TBX-GHATGD-05
2-GH-X-079-152R-3
2-GH-X-086-152R-3
2-GH-X-093-152R-3
2-GH-X-100-152R-3
2-GH-X-110-152R-3
1-GH-X-076-152R-3
1-GH-X-083-152R-3
1-GH-X-090-152R-3
1-GH-X-097-152R-3
1-GH-X-107-152R-3
XGH-7826A
XGH-7820A
XGH-7826B
XGH-7820B
XGH-7826C
XGH-7820C
XGH-7826D
XGH-7820D
XGH-7836A
XGH-7830A
2-GH-X-153-152R-5
2-GH-X-184-152R-5
2-GH-X-185-152R-5
2-GH-X-186-152R-5
1-GH-X-074-152R-5
1-GH-X-075-152R-5
R
2-GH-X-187-152R-5
2-GH-X-073-152R-5
WPS-RECOMB OUT M1-0269-01 LOC: A-1
2-GH-X-070-152R-5
1-GH-X-943-152R-5
XGH-7819
XGH-7818
XGH-7828
XGH-7829
GAS DECAY TANKS M1-0270-A LOC: A-5
EDITORIAL
2-GH-X-071-152R-5
2-GH-X-072-152R-5
WPS-COMPR DISCHARGE M1-0269 LOC: A-2
SHUTDOWN GAS DECAY TANK 9 M1-0270-A LOC: A-5
1-GH-X-161-152R-5
CS
SS
XGH-7840
XGH-7954
1-GH-X-160-151R-5
2-GH-X-188-152R-5
SHUTDOWN GAS DECAY TK 10 M1-0270-A LOC: A-5
WPS-COMPR SUCTION M1-0269-01 LOC: A-2
1/2 -GH-X-911-152R-5
1-GH-X-193-151R-5
XGH-7952
GAS DECAY TANKS DRAIN PUMP TBX-GHAPGD-01
3/4 -151R-5
XGH-0014
RWMS
X-PI-1093
XGH-7962
2-GH-X-187-152R-5
NOTE 5
T
GAS TRAP TBX-GHGTBT-01
2-GH-X-191-152R-5
1x 3/4
XGH-7951
1-GH-X-194-151R-5
XGH-7950
X-QT-1091
1-GH-X-195-151R-5
XGH-7953
2-GH-X-192-151R-5
XGH-0005
1 1/2 -GH-X-910-152R-5
1-GH-X-909-152R-5
XGH-7955
XGH-7956
GAS TRAP TBX-GHGTAT-01
DD
GH
REACTOR MAKE-UP M1-0242 LOC: E-1
1-DD-X-103-151-5
LC
XGH-7838
XGH-7839
1-GH-X-159-151R-5
1-GH-X-195-151R-5
XGH-7966
XGH-7963
1-GH-X-200-151R-5
1-BR-X-124-151R-5
BRS REC HOLDUP TANK M1-0258 LOC: A-5
BR
WPS-COMP SUCTION M1-0269-B LOC: A-5
3/4 -GH-X-915-152R-5
X-PI-5291
XGH-4004
AUX BLDG
SG BLDG UNIT 2
TEMP BLIND FLANGE SEE NOTE 10
1-GH-2-200-151R-2
WPS-DRAIN HEADER M1-0269 LOC: A-6
1-GH-X-202-152R-5
XGH-7957
XGH-7959
1-GH-X-221-152R-5
1-GH-X-203-151R-5
1-GH-X-196-151R-5
XGH-0021
1-CS-2-200-151R-2
CVCS-VOL CONTR TANK M2-0254 LOC: A-3
WASTE GAS DRAIN FILTER TBX-GHFLGD-01
2GH-7964
2GH-7965
NOTE 6
1-GH-2-198-151R-5
GAS TRAP TBX-GHGTAT-03
WPS-WASTE HOLDUP M1-0265 LOC: A-1
1-WP-X-062-151R-5
XGH-0015
1-GH-X-202-152R-5
WPS-RECOMB DH M1-0269-A LOC: G-6
1-GH-X-206-152R-5
WP
SS
GH
CS
206
205
1-GH-X-206-152R-5
XGH-7961
1GH-7964
1GH-7965
1-GH-1-197-151R-2
1-GH-1-198-151R-5
NOTE 6
1-CS-1-200-151R-2
CVCS-VOL CONTR TANK M1-0255 LOC: D-3
GAS TRAP TBX-GHGTAT-02
WPS-GA DRAIN HEADER M1-0269-D LOC: A-6
3/4 -GH-X-919-152R-5
WPS-COMP SUCTION M1-0269-B LOC: G-5
3/4 -GH-X-914-152R-5
WPS-WASTE HOLDUP M1-0265 LOC: A-1
1-WP-X-060-151R-5
XGH-7960
1-GH-X-205-151R-5

REV	DWN	CHKD	APVD	REMARKS
CP-20	Mkf 08-01-2011	BLK 08-11-2011		THIS DRAWING REVISED TO INCORPORATE DESIGN CHANGE FDA-2011-000130-01-00 PER SK-0001-11-000130-01-00. EDITORIAL CHANGE AS NOTED.

NOTES:

1. FOR GENERAL NOTES AND SYMBOLS SEE M1-0200.
2. DRAWING IS COMMON TO UNITS 1 AND 2.
3. CONNECTION TO GAS DECAY TANKS AS SPECIFIED BY WESTINGHOUSE DRAWING 1099E31 R-6.
4. FLOW DIAGRAM REDRAWN FROM WESTINGHOUSE DRAWINGS 1141E71 SHEET 1 R-5 AND 1141E71 SHEET 2 R-5.
5. TRAPS MUST BE LOCATED BELOW DRAIN SOURCE AND WITHOUT LOOP SEAL IN INLET PIPING.
6. VALVES 2GH-7964 AND 2GH-7965 MUST BE LOCATED NEAR VOLUME CONTROL TANK.
7. GH-SYSTEM IS WITHIN RADIOACTIVE WASTE MANAGEMENT SYSTEM BOUNDARIES.
8. DELETED
9. FOR INSTRUMENTATION AND CONTROL SEE 2200 SERIES I & C DIAGRAM.
10. THIS BLIND FLANGE TO BE REMOVED ONLY AT THE DIRECTION OF NUCLEAR OPERATIONS.
11. DELETED

FSAR FIGURE 11.3-1

THIS DRAWING CREATED ELECTRONICALLY

DRAWING 2323-M1-0270 REV CP-6
HAS BEEN SPLIT INTO THE FOLLOWING SHEETS:
M1-0270
M1-0270-A

CLASS I
(NUCLEAR SAFETY-RELATED)
SAFETY CLASS 1 — SEISMIC CATEGORY I
SAFETY CLASS 2 — CLASS 1E
SAFETY CLASS 3 — ASSOCIATED CIRCUITS

LUMINANT
CPNPP
GLEN ROSE, TEXAS

FLOW DIAGRAM
WASTE PROCESSING SYSTEM
(GAS)

DWG. NO. M1-0270 | SH. NO. - | REV. CP-20

REF CHKD 3/21/2001

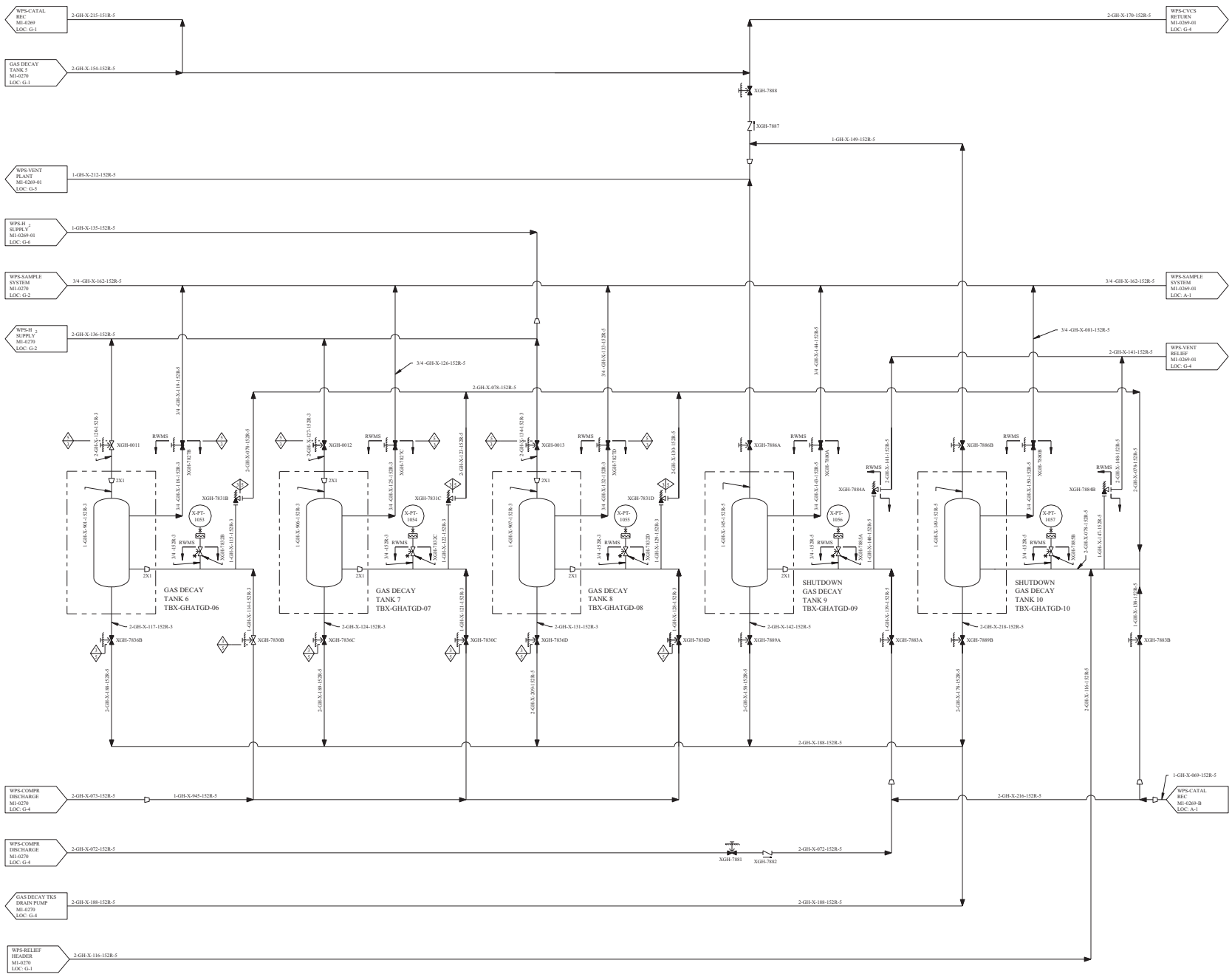

REV	DWN	CHKD	APVD	REMARKS
CP-6	RME 05-30 1996			THIS DRAWING REVISED TO ADD THE FSAR FIGURE NUMBER AS AN EDITORIAL CHANGE.

NOTES:

1. FOR GENERAL NOTES AND SYMBOLS SEE M1-0200.
2. DRAWING IS COMMON TO UNITS 1 AND 2.
3. CONNECTION TO GAS DECAY TANKS AS SPECIFIED BY WESTINGHOUSE DRAWING 1099E31 R6.
4. FLOW DIAGRAM REDRAWN FROM WESTINGHOUSE DRAWING NUMBERS 1141E71 SH 1 R5 AND 1141E71 SH 2 R5
5. GH SYSTEM IS WITHIN RADIOACTIVE WASTE MANAGEMENT BOUNDARIES.
6. FOR INSTRUMENTATION AND CONTROL SEE 2200 SERIES I&C DIAGRAM.

FSAR FIGURE 11.3-1

CP 6

THIS DRAWING CREATED ELECTRONICALLY

DRAWING 2323-M1-0270 REV CP-6
HAS BEEN SPLIT INTO THE FOLLOWING SHEETS:
M1-0270
M1-0270-A

CLASS I
(NUCLEAR SAFETY-RELATED)
SAFETY CLASS 1 SEISMIC CATEGORY
SAFETY CLASS 2 CLASS 1E
SAFETY CLASS 3 ASSOCIATED CIRCUITS

TXU ELECTRIC
CPSES
GLEN ROSE, TEXAS

FLOW DIAGRAM
WASTE PROCESSING SYSTEM
(GAS)

DWG. NO.	SH. NO.	REV.
M1-0270	A	CP-6

vs0000ge.dgn

FIGURE 11.3-2

96

This Figure has been deleted

FIGURE 11.3-3

96

This Figure has been deleted

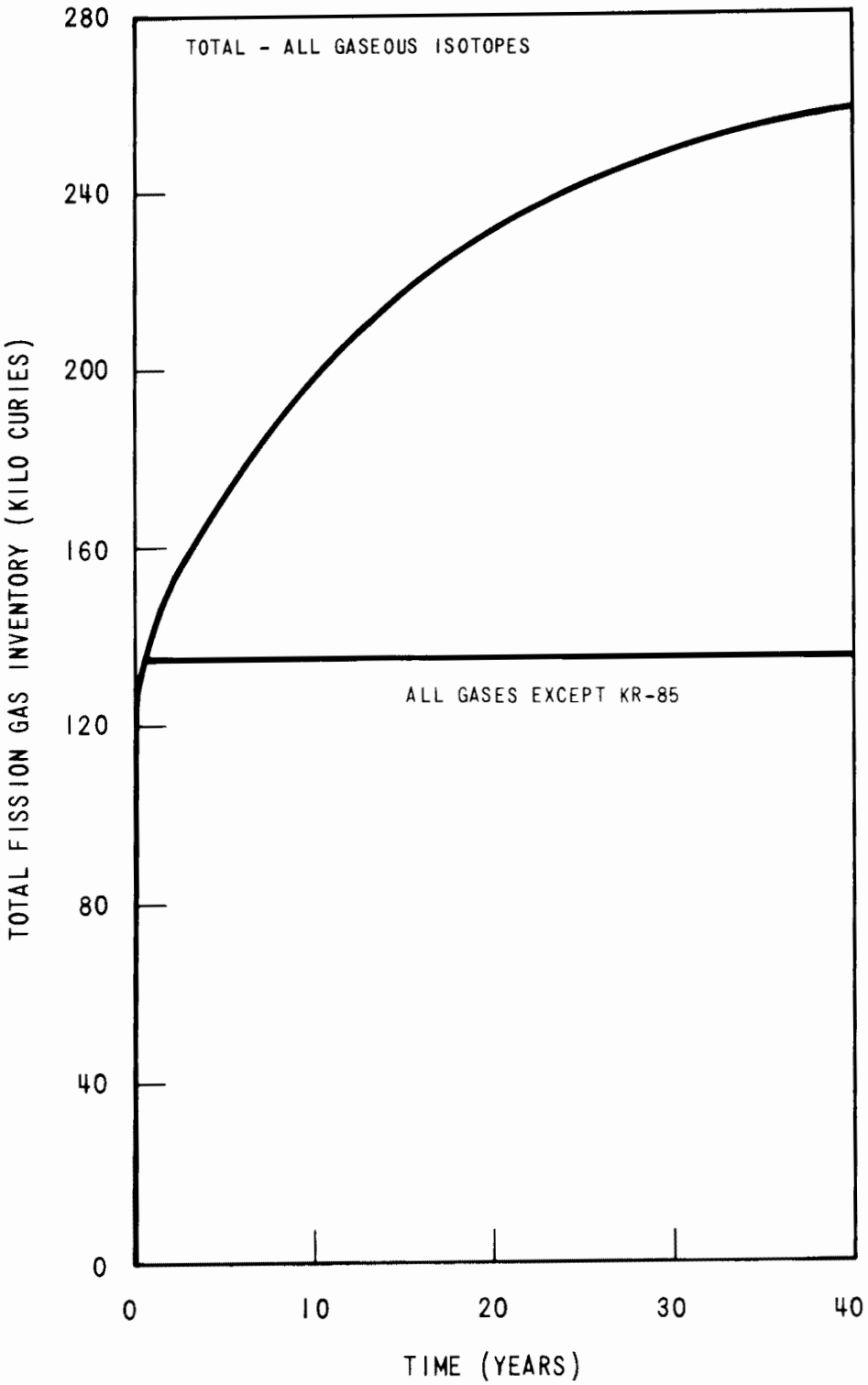

Note: Based on continuous core operation at 3565 Mwt with 1 percent fuel defects, stripping efficiency of 100 percent (refer to Table 11.1-1).

COMANCHE PEAK S.E.S.
FINAL SAFETY ANALYSIS REPORT
UNITS 1 and 2

GWPS Fission Gas Accumulation

FIGURE 11.3-4

UNITED STATES OF AMERICA
NUCLEAR REGULATORY COMMISSION

BEFORE THE ATOMIC SAFETY AND LICENSING BOARD

In the Matter of	)	
	)	
TEXAS UTILITIES GENERATING COMPANY, et al.	)	Docket Nos. 50-445- and 50-446
	)	
(Comanche Peak Steam Electric Station, Units 1 and 2)	)	

STIPULATION

In consideration of the following Stipulation, Citizens for Fair Utility Regulation ("CFUR") hereby voluntarily withdraws Contention 9 from litigation in this proceeding. It is agreed that this Stipulation is contingent upon its acceptance by the NRC Staff and upon dismissal of Contention 9 by the Licensing Board. It is also agreed that nothing in this Stipulation shall prevent modification of the Stipulation and/or the operating criteria for Comanche Peak if NRC Regulations change or if Applicants determine that there is a better method than that outlined below to achieve the objective.

It is agreed between CFUR and Applicants that Applicants will operate Comanche Peak such that dose commitments from planned gaseous radioactive batch releases are as low as is reasonably achievable. Applicants shall take meterology, demography and batch characteristics into consideration in

achieving this objective. Applicants will include this Stipulation in the Final Safety Analysis Report for Comanche Peak.

Citizens for Fair Utility Regulation

Counsel for Applicants

Date: November 20, 1981

COMANCHE PEAK S.E.S.
FINAL SAFETY ANALYSIS REPORT
UNITS 1 and 2

ALARA STIPULATION
(CFUR)

FIGURE 11.3-5

CPSES/FSAR
FIGURE 11.4-1

(DELETED)

JANUARY 21, 1985

COMANCHE PEAK S.E.S.
FINAL SAFETY ANALYSIS REPORT
UNITS 1 and 2

FLOW DIAGRAM - RADIOACTIVE
WASTE SOLIDIFICATION SYSTEM

FIGURE 11.4-1

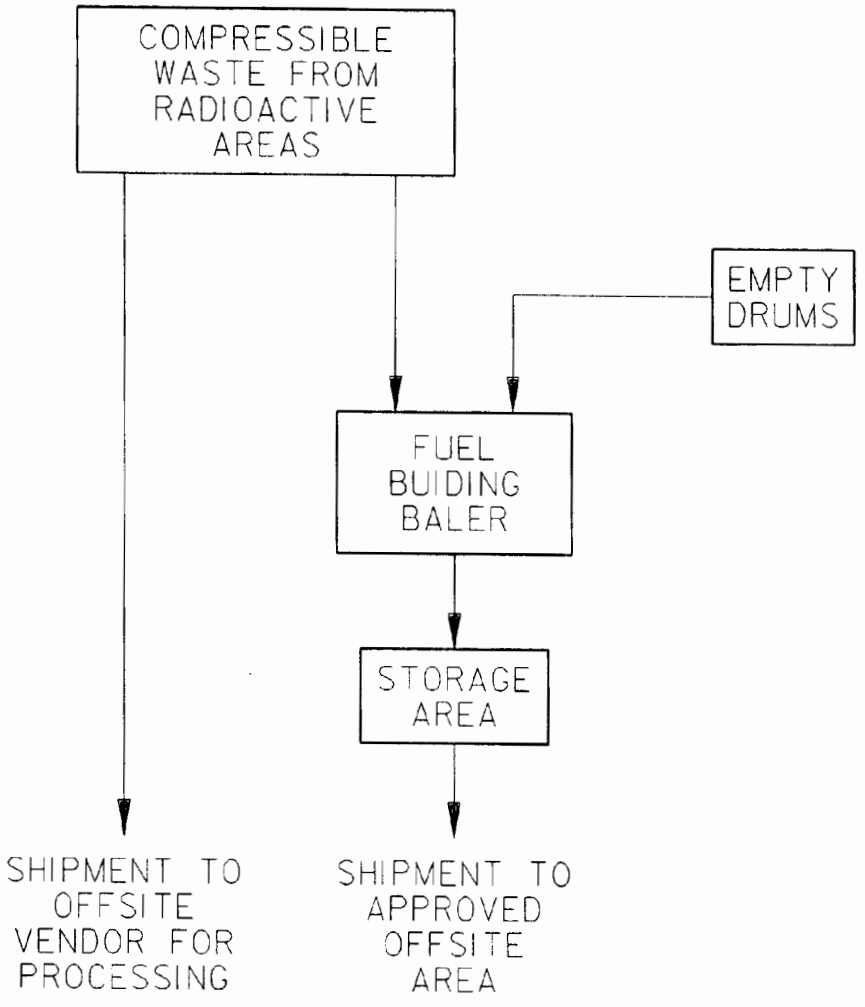

AMENDMENT 86
AUGUST 31, 1992

COMANCHE PEAK S E S
FINAL SAFETY ANALYSIS REPORT
UNITS 1 AND 2

FLOW SHEET
BALER - SUBSYSTEM

FIGURE 11.4-2

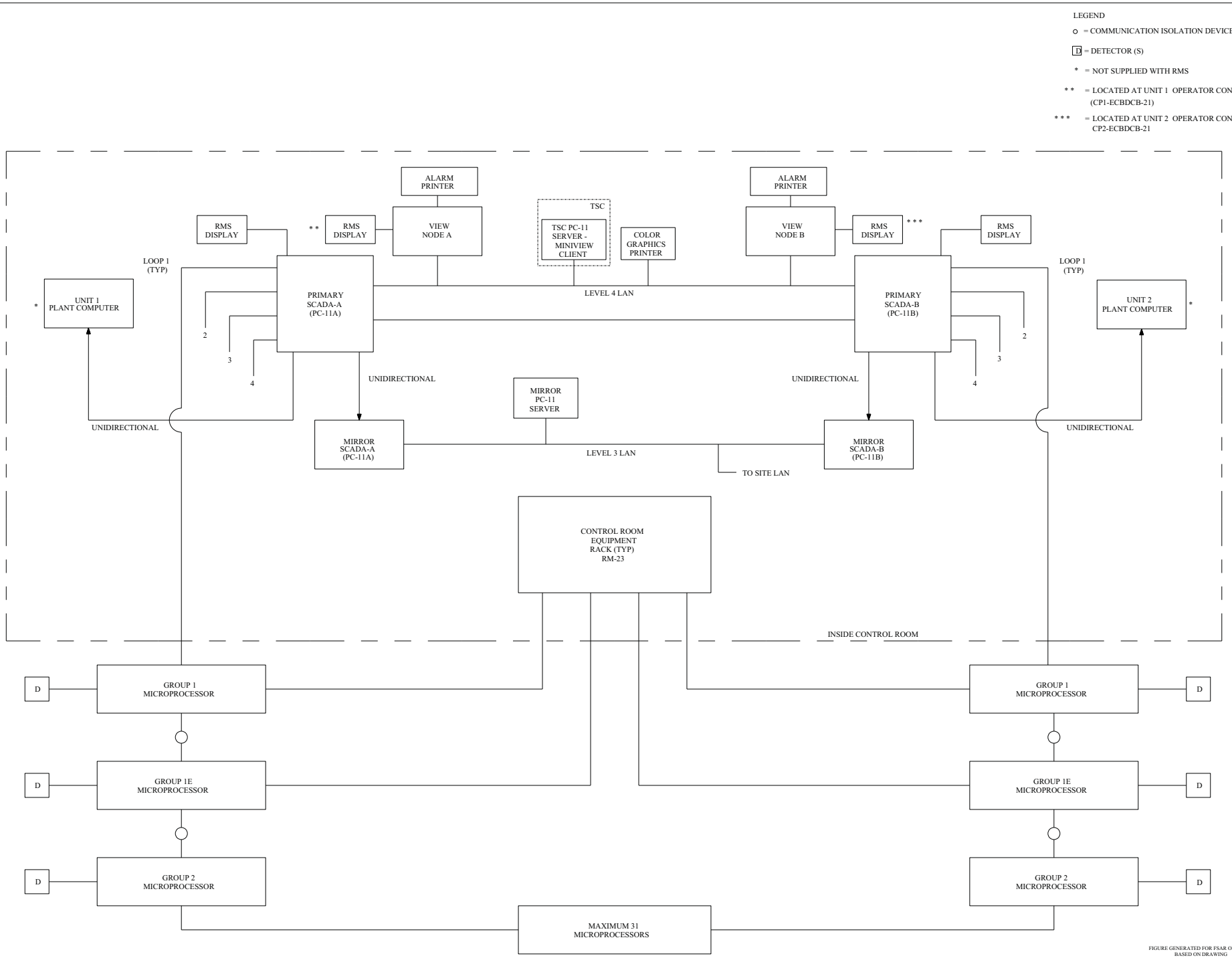

FIGURE GENERATED FOR FSAR ONLY
BASED ON DRAWING

COMANCHE PEAK N.P.P.
FINAL SAFETY ANALYSIS REPORT
UNITS 1 AND 2

BLOCK DIAGRAM
DIGITAL RADIATION
MONITORING SYSTEM

FIGURE 11.5-1

Amendment No. 105

07-24-2012
FIG001151.DGN

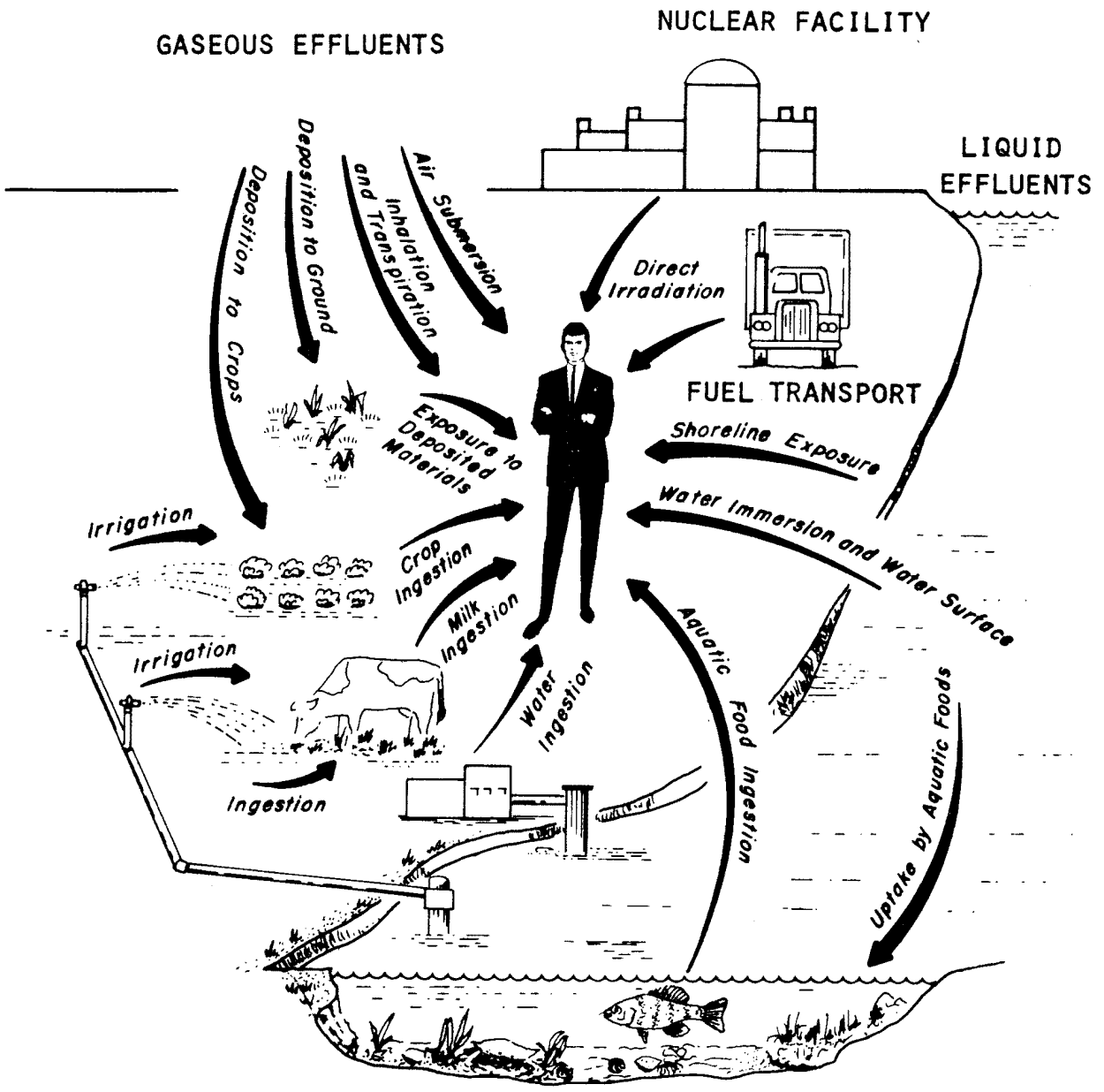

COMANCHE PEAK S.E.S.
FINAL SAFETY ANALYSIS REPORT
UNITS 1 and 2

EXPOSURE PATHWAYS TO MAN

FIGURE 11A-1

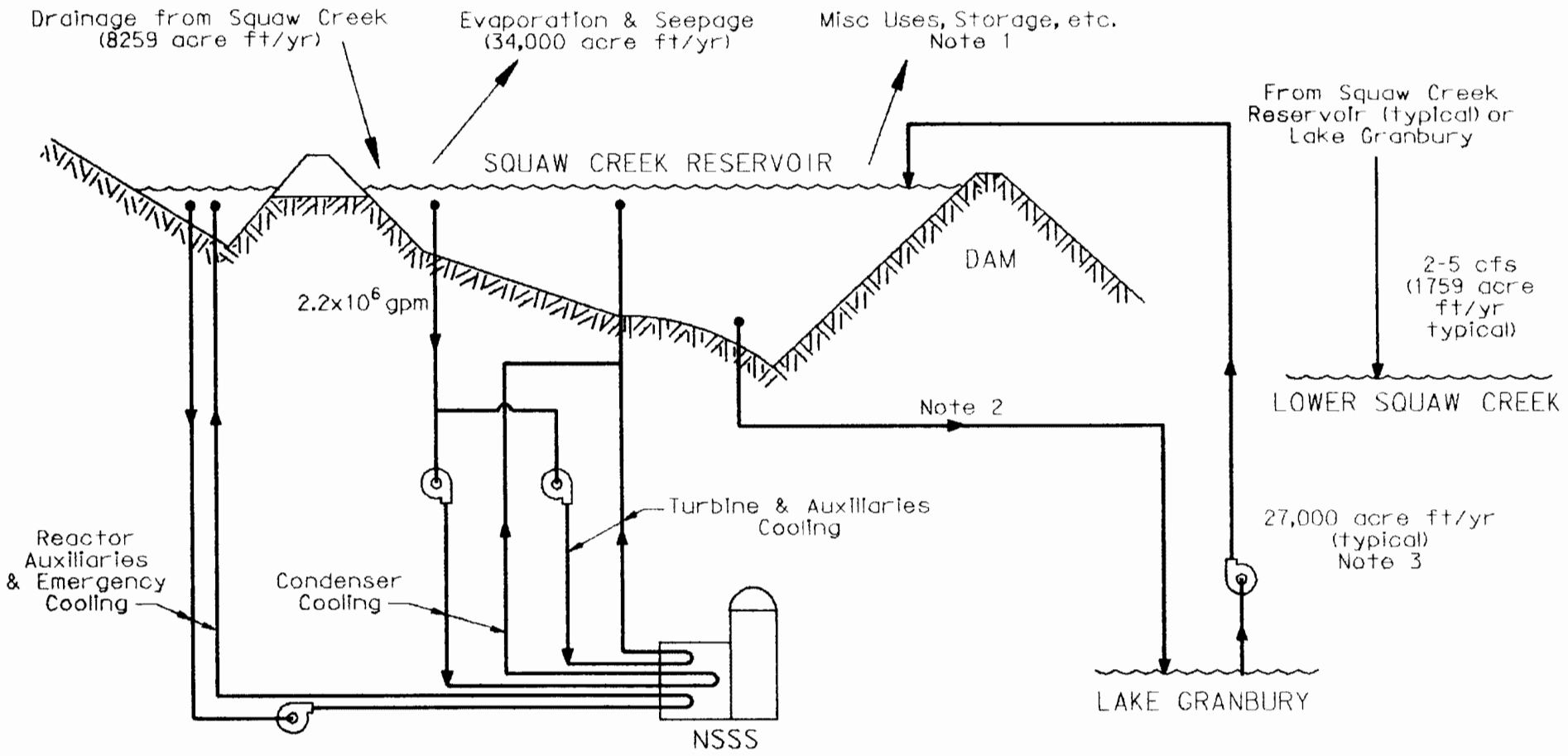

Notes:

(1) Negligible net volume removed from Squaw Creek Reservoir per year.

(2) Return flow to Lake Granbury from Squaw Creek Reservoir is not a typical flow path.

(3) Water is pumped from Lake Granbury to Squaw Creek Reservoir to maintain water level in reservoir. This amount of water varies, but is based on drainage from Squaw Creek, evaporation, release to lower Squaw Creek, etc.

DS1392029

AMENDMENT 85
MAY 29, 1992

COMANCHE PEAK S.E.S.
FINAL SAFETY ANALYSIS REPORT
UNITS 1 AND 2

RESERVOIR - CPSES FLOW PATH

FIGURE 11A-2

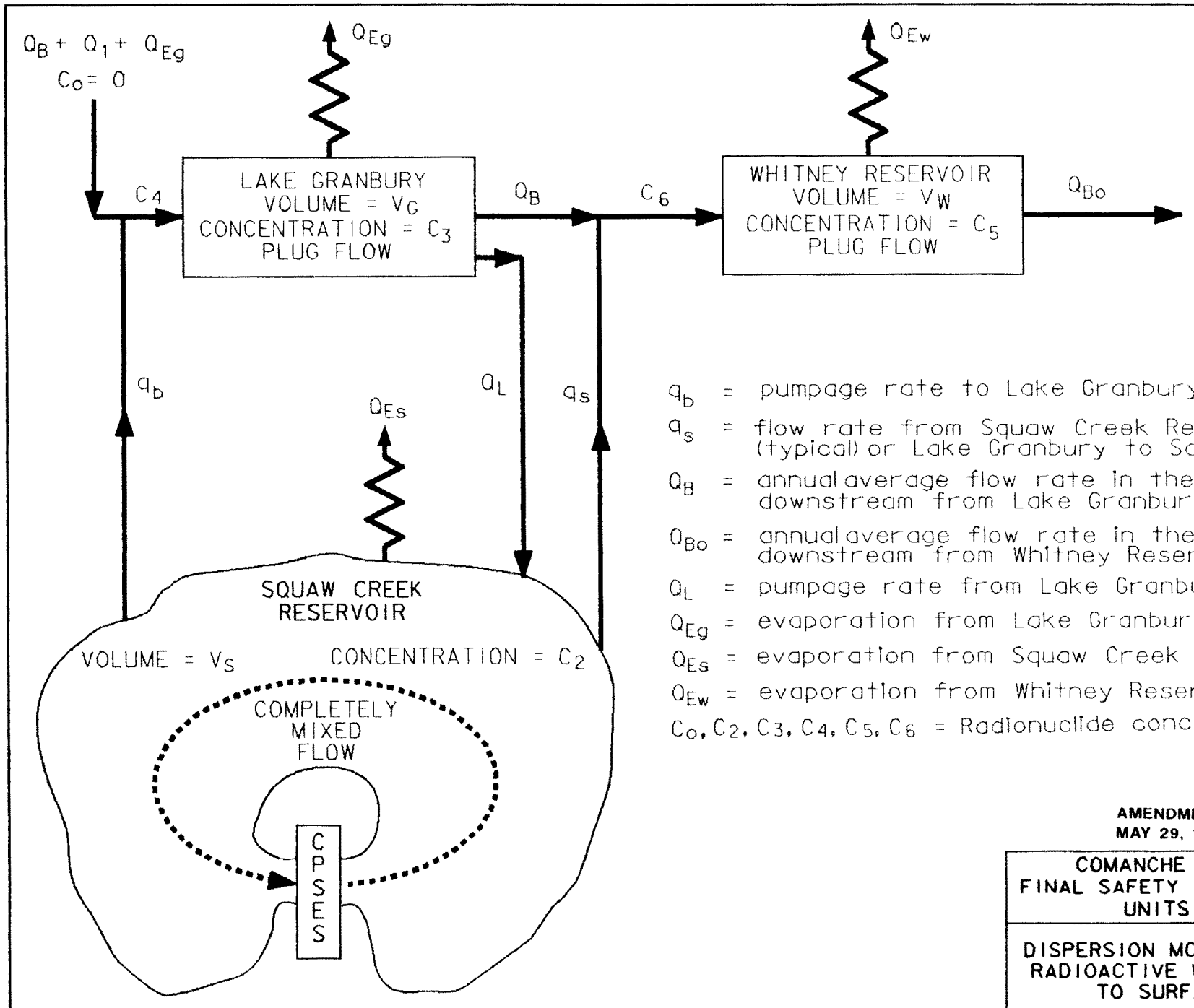

q_b = pumpage rate to Lake Granbury

q_s = flow rate from Squaw Creek Reservoir (typical) or Lake Granbury to Squaw Creek

Q_B = annual average flow rate in the Brazos River downstream from Lake Granbury

Q_{Bo} = annual average flow rate in the Brazos River downstream from Whitney Reservoir

Q_L = pumpage rate from Lake Granbury

Q_{Eg} = evaporation from Lake Granbury

Q_{Es} = evaporation from Squaw Creek Reservoir

Q_{Ew} = evaporation from Whitney Reservoir

$C_o, C_2, C_3, C_4, C_5, C_6$ = Radionuclide concentrations

DS1392029

AMENDMENT 85
MAY 29, 1992

COMANCHE PEAK S.E.S.
FINAL SAFETY ANALYSIS REPORT
UNITS 1 AND 2

DISPERSION MODEL FOR NORMAL RADIOACTIVE WATER RELEASES TO SURFACE WATER

FIGURE 11A-3