Exelon Generation

200 Exelon Way
Kennett Square, PA 19348

www.exeloncorp.com

10 CFR 50.55a

August 10, 2017

U.S. Nuclear Regulatory Commission
Attn: Document Control Desk
Washington, DC 20555-0001

James A. FitzPatrick Nuclear Power Plant
Renewed Facility Operating License No. DPR-59
NRC Docket No. 50-333

Subject: Submittal of Relief Requests Associated with the Fifth Inservice Inspection (ISI) Interval

Attached for your review are relief requests associated with the fifth Inservice Inspection (ISI) interval for the James A. FitzPatrick Nuclear Power Plant (JAFNPP). The fifth interval of the JAFNPP program complies with the 2007 Edition with 2008 Addenda, of the American Society of Mechanical Engineers (ASME) Boiler and Pressure Vessel (B&PV) Code. The fifth ISI interval began on August 1, 2017, and is currently scheduled to end June 15, 2027. We request your approval of this package by August 10, 2018.

There are no regulatory commitments in this letter.

If you have any questions concerning this letter, please contact Tom Loomis at (610) 765-5510.

Respectfully,

James Barstow
Director - Licensing & Regulatory Affairs
Exelon Generation Company, LLC

Attachment: Relief Requests Associated with the Fifth Ten-Year Interval for the James A. FitzPatrick Nuclear Power Plant

cc: Regional Administrator, Region I, USNRC
USNRC Senior Resident Inspector, JAFNPP
Project Manager [JAFNPP] USNRC

Attachment
Relief Requests Associated with the Fifth Ten-Year Interval for the James A. FitzPatrick Nuclear Power Plant

I5R-02
I5R-03
I5R-04

Request for Relief for the Use of BWRVIP Guidelines in Lieu of Specific ASME Section XI Code Requirements on Reactor Pressure Vessel Internals and Components Inspection In Accordance with 10 CFR 50.55a(z)(1)

---

1. ASME Code Component(s) Affected:

Code Class:	1
Reference:	IWB-2500, Table IWB-2500-1
Examination Category:	B-N-1 and B-N-2
Item Number:	B13.10, B13.20, B13.30, and B13.40
Description:	Use of BWRVIP Guidelines in Lieu of Specific ASME Section XI Code Requirements on Reactor Pressure Vessel Internals and Components Inspection
Component Number:	Vessel Interior, Interior Attachments within Beltline Region, Interior Attachments beyond Beltline Region, and Core Support Structure

2. Applicable Code Edition and Addenda:

The Inservice Inspection Program is based on American Society of Mechanical Engineers (ASME) Boiler and Pressure Vessel (B&PV) Code, Section XI, 2007 Edition through the 2008 Addenda.

3. Applicable ASME Code Requirements:

ASME Section Xl, 2007 Edition with 2008 Addenda, requires the examination of components within the Reactor Pressure Vessel. These examinations are included in Table IWB-2500-1, Categories B-N-1 and B-N-2 and identified with the following Item Numbers:

B13.10 - Examine accessible areas of the reactor vessel interior each period by the VT-3 method (B-N-1)

B13.20 - Examine interior attachment welds within the beltline region each interval by the VT-1 method (B-N-2)

B13.30 - Examine the interior attachment welds beyond the beltline region each interval by the VT-3 method (B-N-2)

B13.40 - Examine surfaces of the welded core support structure each interval by the VT-3 method (B-N-2)

These examinations are performed to assess the structural integrity of the reactor vessel interior, its welded attachments, and the welded core support structure within the boiling water reactor pressure vessel.

The components/welds listed in Table 1 are subject to this request for alternative. Table 1 provides only an overview of the requirements. For more details, refer to ASME Section XI, Table IWB-2500-1 and the appropriate BWRVIP document.

4. Reason for Request:

In accordance with 10 CFR 50.55a(z)(1), the James A. FitzPatrick Nuclear Power Plant (JAFNPP) is requesting NRC approval of a proposed alternative to the ASME Section XI Code requirements provided above on the basis that use of the BWRVIP guidelines discussed below provide an acceptable level of quality and safety.

The BWRVIP Inspection and Evaluation (I&E) guidelines recommend specific inspections by BWR owners to identify material degradation with BWR components. A wealth of inspection data has been gathered during these inspections across the BWR industry. The BWRVIP I&E Guidelines focus on specific and susceptible components, specify appropriate inspection methods capable of identifying known or potential degradation mechanisms, and require re-examination at appropriate intervals. The scope of the I&E Guidelines meet or exceed that of ASME Section XI and in many instances include components that are not part of the ASME Section XI jurisdiction.

Use of this proposed alternative will maintain an acceptable level of quality and safety and avoid duplicate or unnecessary inspections, while conserving radiological dose.

5. Proposed Alternative and Basis for Use:

In lieu of the requirements of ASME Section XI, the proposed alternative is detailed in Table 1 for the JAFNPP for Examination Categories of B-N-1 and B-N-2.

The JAFNPP will satisfy the Examination Category B-N-1 and B-N-2 requirements as described in Table 1 in accordance with BWRVIP guideline requirements. This relief request proposes to utilize the associated BWRVIP guidelines in lieu of the associated Code requirements including but not limited to exam method, volume, frequency, training, successive and additional examinations, flaw evaluations, and reporting.

Not all the components addressed by these guidelines are code components. The following guidelines are applicable to this Relief Request:

- BWRVIP-03, Reactor Pressure Vessel and Internals Examinations Guidelines
- BWRVIP-18, Revision 2-A, BWR Core Spray Internals Inspection and Flaw Evaluation Guidelines
- BWRVIP-25, BWR Core Plate Inspection and Flaw Evaluation Guidelines
- BWRVIP-26-A, BWR Top Guide Inspection and Flaw Evaluation Guidelines
- BWRVIP-27-A, BWR Standby Liquid Control System/Core Plate ΔP Inspection and Flaw Evaluation Guidelines
- BWRVIP-38, BWR Shroud Support Inspection and Flaw Evaluation Guidelines
- BWRVIP-41, Revision 3, BWR Jet Pump Assembly Inspection and Flaw Evaluation Guidelines (NOTE: BWRVIP-41, Revision 4 will used upon NRC approval)
- BWRVIP-47-A, BWR Lower Plenum Inspection and Flaw Evaluation Guidelines
- BWRVIP-48-A, Vessel ID Attachment Weld Inspection and Flaw Evaluation Guidelines
- BWRVIP-76, Revision 1-A, BWR Core Shroud Inspection and Flaw Evaluation Guidelines
- BWRVIP-94, Revision 2, BWR Vessel and Internals Project Program Implementation Guide

- BWRVIP-138, Revision 1-A, Updated Jet Pump Beam Inspection and Flaw Evaluation Guidelines
- BWRVIP-180, Access Hole Cover Inspection and Flaw Evaluation Guidelines
- BWRVIP-183, Top Guide Grid Beam Inspection and Flaw Evaluation Guidelines

Inspection services, by an Authorized Inspection Agency, will be applied to the proposed alternative actions of this relief request.

BWRs now examine reactor internals in accordance with BWRVIP guidelines. These guidelines are written for the safety significant vessel internal components and provide appropriate examination and evaluation criteria with using appropriate methods and reexamination frequencies. The BWRVIP has established a reporting protocol for examination results and deviations. The NRC has agreed with the BWRVIP approach in principle and has issued Safety Evaluations for many of these guidelines (Reference 1 – 10). Therefore, use of these guidelines, as an alternative to the subject ASME Section XI Code requirements, provides an acceptable level of quality and safety and will not adversely impact the health and safety of the public.

As additional justification, Enclosure 1 ("Comparison of Code Examination Requirements to BWRVIP Examination Requirements") provides specific examples that compare the inspection requirements of ASME Code Item Numbers B13.10, B13.20, B13.30, and B13.40 in Table IWB-2500-1, to the inspection requirements in the BWRVIP documents. Specific BWRVIP documents are provided as examples. This comparison also includes a discussion of the inspection methods. These comparisons demonstrate that use of these guidelines, as an alternative to the subject Code requirements, provide an acceptable level of quality and safety and will not adversely impact the health and safety of the public.

Enclosure 2 provides the most recent BWRVIP inspections at the JAFNPP through the 2017 outage.

When a BWRVIP Guideline refers to ASME Section XI, the technical requirements of ASME Section XI as described by the BWRVIP Guideline will be met, but the examination is under the auspices of the BWRVIP program as defined by BWRVIP-94, "BWR Vessel and Internals Project Program Implementation Guide." The JAFNPP reactor vessel internals inspection program has been developed and implemented to satisfy the requirements of BWRVIP-94. It is recognized that the BWRVIP executive committee periodically revises the BWRVIP guidelines to address industry operating experience, include enhancements to inspection techniques, and add or adjust flaw evaluation methodologies. BWRVIP-94, Revision 2 states that where guidance in existing BWRVIP documents has been supplemented or revised by subsequent correspondence approved by the BWRVIP Executive Committee, the vessel and internals program shall be modified to reflect the new requirements and implement the guidance within two refueling outages, unless a different schedule is specified by the BWRVIP.

However, if new guidance approved by the Executive Committee includes changes to NRC approved BWRVIP guidance that are less conservative than those approved by the NRC, the less conservative guidance shall be implemented only after NRC approves the changes, which generally means publication of a "-A" document or equivalent. Where the revised version of a BWRVIP inspection guideline continues to also meet the requirements of the version of the BWRVIP inspection guideline that forms the safety basis for the NRC-authorized proposed alternative to the requirements of

10 CFR50.55a, it may be implemented. Otherwise, the revised guidelines will only be implemented after NRC approval of the revised BWRVIP guidelines or a plant-specific request for alternative has been approved. Table 1 below only represents the most current comparison.

Any deviations from the referenced BWRVIP Guidelines for the duration of the proposed alternative will be appropriately documented and communicated to the NRC, per the BWRVIP Deviation Disposition Process. JAFNPP currently has no open deviation dispositions.

Note that other regulatory commitments (e.g., NUREG-0619) are still implemented separately from the ASME Section XI Program or this request for alternative.

In the event that conditions are identified that require repair or replacement and the component is within the jurisdiction of ASME Section XI (welded attachments to the RPV or Core Support Structure), the repair or replacement activities will be performed in accordance with ASME Section XI, Article IWA-4000. Subsequent examinations will be in accordance with the applicable BWRVIP Guideline.

Pursuant to 10 CFR 50.55a(z)(1), JAFNPP requests authorization to utilize the alternative requirements of BWRVIP Guidelines in lieu of the requirements of ASME Section XI. The proposed alternative is detailed in Table 1 for Examination Category B-N-1 and B-N-2.

As part of the BWRVIP initiative, the BWR reactor internals and attachments were subjected to a safety assessment to identify those components that provide a safety function and to determine if long-term actions were necessary to ensure continued safe operation. The safety functions considered are those associated with (1) maintaining a coolable geometry, (2) maintaining control rod insertion times, (3) maintaining reactivity control, (4) assuring core cooling and (5) assuring instrumentation availability. The results of the safety assessment are documented in BWRVIP-06, Revision 1-A, "BWR Vessel and Internals Project Safety Assessment of BWR Internals" which has been approved by the NRC. As a result of BWRVIP-06, component specific BWRVIP guidelines were developed providing appropriate examination and evaluation requirements to address the specific component safety function and potential degradation mechanism.

In accordance with BWRVIP requirements, plant specific leakage assessments have been performed for identified or postulated through-wall cracking in the reactor vessel. JAFNPP has assumed leakage for flaws in the Core Spray 190 degree downcomer weld that was structurally replaced with a clamshell, Jet Pump diffuser (DF-3) welds, and Core Shroud welds.

Leakage through the Core Spray 190 degree downcomer crack repair is conservatively calculated to be 40 gallons per minute (gpm). The crack is assumed to be 360 degrees and through-wall thus no crack growth is needed. This leakage is within the limit of 123 gpm for Core Spray. Leakage was calculated for the Jet Pump DF-3 welds to be 98.5 gpm in the most limiting loop assuming 8 years of crack growth. This is within the allowable limit of 200 gpm per loop. For all known and postulated Core Shroud cracking the leakage is calculated to be 205 gpm. All structurally repaired circumferential welds are assumed fully cracked. This shroud leakage is a direct input to the JAFNPP SAFER/GESTR-LOCA analysis. All calculated leakage over at least one 24-month operating cycle is within these limits so there will be no increase to the Peak Cladding Temperature (PCT).

The plant-specific leakage assessments concluded that postulated leakage through the Core Shroud cracks combined with leakage in Jet Pump welds and Core Spray weld would not increase the PCT analyzed in the JAFNPP SAFER/GESTR-LOCA analysis which is below the 10 CFR 50.46(b) regulatory limit of 2200°F.

6. Duration of Proposed Alternative:

This request for alternative is requested for the fifth 10-Year ISI interval.

7. Precedents:

1. Letter from U.S. Nuclear Regulatory Commission (USNRC) to B. Hanson (Exelon Generation Company, LLC), "Nine Mile Point Nuclear Station, Units 1 and 2 - Relief Request Alternative RE: Use of Boiling Water Reactor Vessel and Internals Project Guidelines in Lieu of Specific ASME Code Requirements (CAC Nos. MF6116 and MF6117)," dated April 29, 2016.

8. References:

1. Letter from USNRC to BWRVIP, dated February 22, 2016, "Final Safety Evaluation for Electric Power Research Institute Topical Report 'BWRVIP-18, Revision 2: Boiling Water Reactor Vessel and Internals Project, Boiling Water Reactor Core Spray Internals Inspection and Flaw Evaluation Guidelines' (TAC NO. MF8809)" (ML16011A190).

2. Letter USNRC to BWRVIP, dated December 19, 1999, "Safety Evaluation of BWR Vessel and Internals Project, BWR Core Plate Inspection and Flaw Evaluation Guidelines (BWRVIP-25)".

3. Letter USNRC to BWRVIP, dated August 29, 2005, "NRC Approval Letter of BWRVIP-26-A, 'BWR Vessel and Internals Project Boiling Water Reactor Top Guide Inspection and Flaw Evaluation Guidelines' (ML052490550)."

4. Letter USNRC to BWRVIP, dated June 10, 2004, "Proprietary Version of NRC Staff Review of BWRVIP-27-A, 'BWR Standby Liquid Control System/Core Plate DP Inspection and Flaw Evaluation Guidelines.' "

5. Letter USNRC to BWRVIP, dated July 24, 2000, "Final Safety Evaluation of the 'BWR Vessel and Internals Project, BWR Shroud Support Inspection and Flaw Evaluation Guidelines (BWRVIP-38),' EPRI Report TR-108823 (TAC NO. M99638)."

6. Letter USNRC to BWRVIP, dated February 4, 2001, "Final Safety Evaluation of the 'BWR Vessel and Internals Project, BWR Jet Pump Assembly Inspection and Flaw Evaluation Guidelines (BWRVIP-41),' (TAC NO. M99870)."

7. Letter USNRC to BWRVIP, dated September 9, 2005, "NRC Approval Letter of BWRVIP-47-A, 'BWR Vessel and Internals Project Boiling Water Reactor Lower Plenum Inspection and Flaw Evaluation Guidelines.' "

8. Letter USNRC to BWRVIP, dated July 25, 2005, "NRC Approval Letter of BWRVIP-48-A, 'BWR Vessel and Internals Project Vessel ID Attachment Weld Inspection and Flaw Evaluation Guideline.' "

9. Letter USNRC to BWRVIP, dated November 12, 2014, "Final Safety Evaluations of the Boiling Water Reactor Vessel and Internals Project 76, Rev. 1 Topical Report, 'Boiling Water Reactor Core Shroud Inspection and Flaw Evaluation Guidelines' (TAC NO. ME8317)."

10. Letter from USNRC to BWRVIP, dated December 31, 2015, "Final Safety Evaluation for Electric Power Research Institute Topical Report BWRVIP-183, 'BWR Vessel and Internals Project, Top Guide Grid Beam Inspection and Flaw Evaluation Guidelines' (TAC No. ME2178)."

TABLE 1
Comparison of ASME Examination Category B-N-1 and B-N-2 Requirements with BWRVIP Guidance Requirements[1]

ASME Item Number Table IWB-2500-1	Component	ASME Exam Scope	ASME Exam	ASME Frequency	Applicable BWRVIP Document	BWRVIP Exam Scope	BWRVIP Exam	BWRVIP Frequency
B13.10	Reactor Vessel Interior	Accessible Areas	VT-3	Each period	BWRVIP-18-R2-A, 25, 26-A, 38, 41-R3, 47-A, 48-A, 76-R1-A, 138-R1-A	Overview examinations of components during BWRVIP examinations are performed to satisfy ASME Section XI Code VT-3 visual examination requirements.		
B13.20	Interior Attachments Within Beltline Region - Riser Braces	Accessible Welds	VT-1	Each 10-year Interval	BWRVIP-48-A, Table 3-2	Riser Brace Attachment	EVT-1	100% in first 12 years, 25% during each subsequent 6 years.
	Lower Surveillance Specimen Holder Brackets				BWRVIP-48-A, Table 3-2	Bracket Attachment	VT-1	Each 10-year Interval.
B13.30	Interior Attachments Beyond Beltline - Steam Dryer Hold-down Brackets	Accessible Welds	VT-3	Each 10-year Interval	BWRVIP-48-A, Table 3-2	Bracket Attachment	VT-3	Each 10-year Interval.
	Guide Rod Brackets				BWRVIP-48-A, Table 3-2	Bracket Attachment	VT-3	Each 10-year Interval.
	Steam Dryer Support Brackets				BWRVIP-48-A, Table 3-2	Bracket Attachment	EVT-1	Each 10-year Interval.
	Feedwater Sparger Brackets				BWRVIP-48-A, Table 3-2	Bracket Attachment	EVT-1	Each 10-year Interval.
	Core Spray Piping Brackets				BWRVIP-48-A, Table 3-2	Bracket Attachment	EVT-1	Every 4 Refueling Cycles.
	Upper Surveillance Specimen Holder Brackets				BWRVIP-48-A, Table 3-2	Bracket Attachment	VT-3	Each 10-year Interval.
	Shroud Support (Weld H9) and Gussets				BWRVIP-38, 3.3, Figure 3-2 and 3-5	Weld H9[2] and Gussets	EVT-1 or UT	Based on as-found conditions, to a maximum of 6 years for EVT-1, 10 years for UT.

TABLE 1
Comparison of ASME Examination Category B-N-1 and B-N-2 Requirements with BWRVIP Guidance Requirements[1]

ASME Item Number Table IWB-2500-1	Component	ASME Exam Scope	ASME Exam	ASME Frequency	Applicable BWRVIP Document	BWRVIP Exam Scope	BWRVIP Exam	BWRVIP Frequency
B13.40	Integrally Welded Core Support Structure	Accessible Surfaces	VT-3	Each 10-year Interval	BWRVIP-38, 3.3, Figure 3-2 and 3-5	Shroud Support Weld H9 Including Gussets	EVT-1 or UT	Based on as-found conditions, to a maximum of 6 years for EVT-1, 10 years for UT.
	Shroud Vertical welds				BWRVIP-76-R1-A, 3.3	Vertical and Ring Segment Welds	EVT-1 or UT	Maximum of 6 years for one-sided EVT-1, 10 years for UT.
	Shroud Repairs				BWRVIP-76-R1-A, Section 3.5	Tie-Rod Repair	EVT-1 or VT-3	Per repair designer recommendations per BWRVIP-76-R1-A.

NOTES:
1) This Table provides only an overview of the requirements. For more details, refer to ASME Section XI, Table IWB-2500-1, and the appropriate BWRVIP document.
2) In accordance with Appendix A of BWRVIP-38, a site-specific evaluation will determine the minimum required weld length to be examined.

Enclosure 1
Comparison of Code Examination Requirements to BWRVIP Examination Requirements

The following discussion provides a comparison of the examination requirements provided in ASME Code Item Numbers B13.10, B13.20, B13.30, and B13.40 in Table IWB-2500-1, to the examination requirements in the BWRVIP guidelines. Specific BWRVIP guidelines are provided as examples for comparisons. This comparison also includes a discussion of the examination methods.

1. Code Requirement - B13.10 - Reactor Vessel Interior Accessible Areas (B-N-1)

The ASME Section XI Code requires a VT-3 examination of reactor vessel accessible areas, which are defined as the spaces above and below the core made accessible during normal refueling outages. The frequency of these examinations is specified as the first refueling outage, and at intervals of approximately 3 years, during the first inspection interval, and each period during each successive 10-year Inspection Interval. Typically, these examinations are performed every other refueling outage of the Inspection Interval. This examination requirement is a non-specific requirement that is a departure from the traditional Section XI examinations of welds and surfaces. As such, this requirement has been interpreted and satisfied differently across the domestic fleet. The purpose of the examination is to identify relevant conditions such as distortion or displacement of parts, loose, missing, or fractured fasteners; foreign material, corrosion, erosion, or accumulation of corrosion products, wear, and structural degradation.

Portions of the various examinations required by the applicable BWRVIP Guidelines require access to accessible areas of the reactor vessel during each refueling outage. Examination of Core Spray Piping and Spargers (BWRVIP-18 R2-A), Top Guide (BWRVIP-26-A), Jet Pump Welds and Components (BWRVIP-41 R3), Interior Attachments (BWRVIP-48-A), Core Shroud Welds (BWRVIP-76 R1-A), Shroud Support (BWRVIP-38) and Lower Plenum Components (BWRVIP-47-A) provides such access. Locating and examining specific welds and components within the reactor vessel areas above, below (if accessible), and surrounding the core (annulus area) entails access by remote camera systems that essentially performs equivalent VT-3 examination of these areas or spaces as the specific weld or component examinations are performed. This provides an equivalent method of visual examination on a more frequent basis than that required by the ASME Section XI Code. Evidence of wear, structural degradation, loose, missing, or displaced parts, foreign materials, and corrosion product buildup can be, and has been observed during the course of implementing these BWRVIP examination requirements. Therefore, the specified BWRVIP Guideline requirements meet or exceed the subject Code requirements for examination method and frequency of the interior of the reactor vessel. Accordingly, these BWRVIP examination requirements provide an acceptable level of quality and safety as compared to the subject Code requirements.

2. Code Requirement - B13.20 - Interior Attachments Within the Beltline (B-N-2)

The ASME Section XI Code requires a VT-1 examination of accessible reactor interior surface attachment welds within the beltline each 10-year interval. In the boiling water reactor, this includes the jet pump riser brace welds-to-vessel wall and the lower surveillance specimen support bracket welds-to-vessel wall. In comparison, the BWRVIP requires the same examination method and frequency for the lower surveillance specimen support bracket welds, and requires an EVT-1 examination on the remaining attachment welds in the beltline region in the first 12 years, and then 25% during each subsequent 6 years.

The jet pump riser brace examination requirements are provided below to show a comparison between the Code and the BWRVIP examination requirements.

Comparison to BWRVIP Requirements - Jet Pump Riser Braces (BWRVIP-41 R3 and BWRVIP-48-A)

- The ASME Code requires a 100% VT-1 examination of the jet pump riser brace-to-reactor vessel wall pad welds each 10-year interval.

- The BWRVIP requires an EVT-1 examination of the jet pump riser brace-to-reactor vessel wall pad welds the first 12 years and then 25% during each subsequent 6 years.

- BWRVIP-48-A specifically defines the susceptible regions of the attachment that are to be examined.

The Code VT-1 examination is conducted to detect discontinuities and imperfections on the surfaces of components, including such conditions as cracks, wear, corrosion, or erosion. The BWRVIP enhanced VT-1 (EVT-1) is conducted to detect discontinuities and imperfections on the surface of components and is additionally specified to detect potentially very tight cracks characteristic of fatigue and inter-granular stress corrosion cracking (IGSCC), the relevant degradation mechanisms for these components. General wear, corrosion, or erosion although generally not a concern for inherently tough, corrosion resistant stainless steel material, would also be detected during the process of performing a BWRVIP EVT- 1 examination.

The ASME Section XI Code 2007 through 2008 Addenda, VT-1 visual examination method requires that a letter character with a height of 0.044 inches can be read. The BWRVIP EVT-1 visual examination method requires the same 0.044 inch resolution on the examination surface and additionally the performance of a cleaning assessment and cleaning as necessary. While the jet pump riser brace configuration varies depending on the vessel manufacturer, BWRVIP-48-A includes diagrams for each configuration and prescribes examination for each configuration including JAFNPP Unit 1 (CE).
The calibration standards used for BWRVIP EVT-1 exams utilize the same Code characters, thus assuring at least equivalent resolution compared to the Code. Although the BWRVIP examination may be less frequent, it is a more comprehensive method. Therefore, the enhanced flaw detection capability of an EVT- 1, with a less frequent examination schedule provides an acceptable level of quality and safety to that provided by the ASME Code.

3. Code Requirement - B13.30 - Interior Attachment Beyond the Beltline Region (B-N-2)

The ASME Section XI Code requires a VT-3 examination of accessible reactor interior surface attachment welds beyond the beltline each 10-year interval. In the boiling water reactor, this includes the core spray piping primary and supplemental support bracket welds-to-vessel wall, the upper surveillance specimen support bracket welds-to-vessel wall, the feedwater sparger support bracket welds-to-reactor vessel wall, the steam dryer support and hold-down bracket welds-to-reactor vessel wall, the guide rod support bracket weld-to-reactor vessel wall, the shroud support plate-to-vessel wall, and shroud support gussets. BWRVIP-48-A requires as a minimum the same VT-3 examination method as the Code for some of the interior attachment welds beyond the beltline region, and in some cases specifies an enhanced visual examination technique EVT-1 for these welds. For those interior attachment welds that have the same VT-3 method of examination, the same scope of examination (accessible welds), the same examination frequency (each 10 year interval) and ASME Section XI flaw evaluation criteria, the level of

quality and safety provided by the BWRVIP requirements are equivalent to that provide by the ASME Code.

For the Core Spray support bracket attachment welds, the steam dryer support bracket attachment welds, the feedwater sparger support bracket attachment welds, and the shroud support plate-to-vessel welds, as applicable, the BWRVIP Guidelines require an EVT-1 examination at the same frequency as the Code, or at a more frequent rate. Therefore, the BWRVIP requirements provide the same level of quality and safety to that provided by the ASME Code.

The Core Spray piping bracket-to-vessel attachment weld is used as an example for comparison between the Code and BWRVIP examination requirements as discussed below.

Comparison to BWRVIP Requirements - Core Spray piping Bracket Welds (BWRVIP-48-A)

- The Code examination requirement is a VT-3 examination of each weld every 10 years.

- The BWRVIP examination requirement is an EVT-1 for the core spray piping bracket attachment welds with each weld examined every four cycles (8 years for units with a two year fuel cycle). The BWRVIP examination method EVT-1 has superior flaw detection and sizing capability, the examination frequency is greater than the Code requirements, and the same flaw evaluation criteria are used.

- The Code VT-3 examination is conducted to detect component structural integrity by ensuring the components general condition is acceptable. An enhanced EVT-1 is conducted to detect discontinuities and imperfections on the examination surfaces, including such conditions as tight cracks caused by IGSCC or fatigue, the relevant degradation mechanisms for BWR internal attachments.

Therefore, with the EVT-1 examination method, the same examination scope (accessible welds), an increased examination frequency (8 years instead of 10 years) in some cases, the same flaw evaluation criteria (Section XI), the level of quality and safety provided by the BWRVIP criteria is superior than that provided by the Code.

4. Code Requirement - B13.40 - Integrally Welded Core Support Structures (B-N-2)

The ASME Code requires a VT-3 examination of accessible surfaces of the welded core support structure each 10-year interval. In the boiling water reactor, the welded core support structure has primarily been considered the shroud support structure, including the shroud support plate (annulus floor) the shroud support ring, the shroud support welds, the shroud support gussets. In later designs, the shroud itself is considered part of the welded core support structure. Historically, this requirement has been interpreted and satisfied differently across the industry. The proposed alternate examination replaces this ASME requirement with specific BWRVIP guidelines that examine susceptible locations for known relevant degradation mechanisms.

- The Code requires a VT-3 of accessible surfaces each 10-year interval.

- The BWRVIP requires as a minimum the same examination method (VT-3) as the Code for integrally welded Core Support Structures, and for specific areas, requires either an enhanced visual examination technique (EVT-1) or volumetric examination (UT).

BWRVIP recommended examinations of integrally welded core support structures are focused on the known susceptible areas of this structure, including the welds and associated weld heat affected zones. As a minimum, the same or superior visual examination technique is required for examination at the same frequency as the code examination requirements. In many locations, the BWRVIP guidelines require a volumetric examination of the susceptible welds at a frequency identical to the Code requirement.

For other integrally welded core support structure components, the BWRVIP requires an EVT-1 or UT of core support structures. The core shroud is used as an example for comparison between the Code and BWRVIP examination requirements as shown below.

<u>Comparison to BWRVIP Requirements - BWR Core Shroud Examination and Flaw Evaluation Guideline (BWRVIP-76 R1-A)</u>

- The Code requires a VT-3 examination of accessible surfaces every 10 years.

- The BWRVIP requires an EVT-1 examination from the inside and outside surface where accessible or ultrasonic examination of each core shroud circumferential weld that has not been structurally replaced with a shroud repair at a calculated "end of interval" (EOI) that will vary depending upon the amount of flaws present, but not to exceed ten years.

The BWRVIP recommended examinations specify locations that are known to be vulnerable to BWR relevant degradation mechanisms rather than "all accessible surfaces". The BWRVIP examination methods (EVT-1 or UT) are superior to the Code required VT-3 for flaw detection and characterization. The BWRVIP examination frequency is equivalent to or more frequent than the examination frequency required by the Code. The superior flaw detection and characterization capability, with an equivalent or more frequent examination frequency and the comparable flaw evaluation criteria, results in the BWRVIP criteria providing a level of quality and safety equivalent to or superior to that provided by the Code requirements.

Enclosure 2
Reactor Internals Inspection History
(Updated for RO22-01/17)

Components in BWRVIP Scope	Date or Frequency of Inspection	Inspection Method Used	Summarize the Following Information: Inspection Results, Repairs, Replacements, Re-inspections
Core Shroud	1994 to present	UT, EVT-1 VT-3 For Shroud Tie Rods	94/95 Outage: Planar flaws on H2, 35" length intermittent (ID/OD) less than 0.75" depth by UT; two small planar flaws on H3, 1.42" length (ID/OD) by UT. A calculated 136" of vertical weld were inspected by EVT-1 or UT with no relevant indications. 96 Outage: Crack like indications on H2, 55" length intermittent (OD) by EVT-1. This cracking is being mitigated by the shroud repair from 94/95 outage with 10 tie-rods; vertical crack like indications on SV5A intermittent (OD) totaling 6-3/4" in length out of total 92", and two horizontal ½" each (one OD and one ID). Crack like indications were less than 10% of weld length and are within allowable per BWRVIP-07. Shroud inspections included 25% vertical welds with 50% at beltline areas, and 3 tie-rods. A calculated 286" of vertical welds were inspected. No relevant indications on other welds. Tie-rod assemblies were found acceptable.
	1998 (R13)	EVT-1	Baseline completed per BWRVIP-07 Guidelines (by EVT-1) for all vertical welds. 100% of beltline shroud welds inspected in R13. Relevant indications found in 5 welds as follows: *SV5A OD-There are 6 indications with a combined length of 9.3 inches. *SV5B OD-There are 18 indications with a combined indication length of 45.8 inches. *SV6A OD-There is 1 indication that is measured to be 1" long. *SV6B ID-There is 1 indication in the weld which is measured to be 0.8 inches long.

			*SH4 Indication-Indication is 3 inches from SV5A ID and is 6 inches long and goes across the SH4 horizontal weld. No relevant indications noted on other vertical welds.
	2000 (R14)	EVT-1	Re-inspected per BWRVIP-76 Guidelines: Vertical Welds SV5A, SV5B, SV6A and SV6B. Relevant indications found in these welds are as follows: *SV5A OD-There are 7 indications total with a combined indication length of 11.7" vertical and 3.3" circ. *SV5B OD-There are 19 indications total with a combined indication length of 50.7" vertical. *SV6A OD-There is one vertical indication that is measured to be 1" long. *SV6B ID-There is one vertical indication in the weld measured to be 1.25" long. *SH4 ID-There is 2 vertical indications across SH4 with total combined length of 6.4". The closest indication is 3" from SV5B. This indication is branching out near the bottom portion.
	2002 (R15)	EVT-1	Re-inspected by BWRVIP-76 Guidelines: Vertical Welds SV2B, SV5B, and SV8A; and Radial Ring Welds SV3A and SV3D. Relevant indications were only noted on the SV5B weld, as follows: • SV5B ID and OD. There appears to be no discernable changes this outage affecting the cracks length from R14; though one additional indication is noted on the ID CCW side of the weld approximately ½" long. This indication may be associated with indications on the opposite side (OD) at the same location.

	2004 (R16)	EVT-1	Inspected Vertical Welds SV2A, SV8C, SV9A, SV9B and SV9C. No relevant indications noted.
	2006 (R17)	UT	Inspected Vertical Welds SV4A, SV4B, SV5A and SV5B. No relevant indications (NRI) noted for welds SV4A and SV4B. For Welds SV5A and SV5B, there is close correlation of flaws from previously seen by EVT-1 in R14, with limited crack growth and no through wall indications. Identified some additional (short intermittent) flaws at Weld SV5A. All indications were satisfactorily disposition.
		EVT-1	Inspected Vertical and/or Radial Welds SV3B, SV3E, SV6A, SV6B and SV8B. Previous indications were observed in Welds SV6A and SV6B with no apparent change since R14.
		EVT-1	Linear indications (<1/2" length) were observed in the upper section of the shroud where the slot was EDM'd for the tie-rod bracket support. The indications are located at 8 out of 10 tie-rod locations. The indications were satisfactorily disposition as having no effect on the structural integrity of the load path between the shroud and the tie-rods for applied vertical or radial loads.
	2008 (R18)	EVT-1	Inspected Vertical/Radial welds SV2B, SC3A, SV3C, SV3F, SV7B, SV7C and SV7E. Inspection included 100% of accessible area of the ID/OD. No relevant indications were noted.
		EVT-1	Re-inspected indications identified in R17 on the shroud ring segment in locations EDM'd for Tie Rod upper

			supports. No change was noted from R17 results.
		EVT-1	Inspected previously recorded flaw on the shroud ID @ SH4 near SV5B. The inspection revealed no changes in size and configuration from the previous inspection in 2002. This inspection was performed per an INPO recommendation from the 2008 BWRVIP review visit to assist the industry in understanding the flaw mechanism-potentially irradiation – assisted corrosion cracking (IASCC).
	2010 (R19)	EVT-1	Inspected Vertical/Radial welds SV2A, SV7A, SV7D, SV8A, SV8C, SV-9A, SV-9B and SV-9C. Inspection included 100% of accessible area of the ID/OD. No relevant indications were noted.
	2012 (R20)	EVT-1	Inspected Vertical/Radial welds SV-3B, SV-3E, SV-6A, SV-6B, and SV-8B. Inspection included 100% of the accessible area of the ID/OD with no relevant indications noted.
		EVT-1	Inspected previously flawed SV-5B @ SH4. The inspection revealed no changes in size of the flaws discovered in 2002.
	2014 (R21)	EVT-1	Inspected accessible areas of Radial Welds SV-3A, 3C, 3D, 3F, 7B, 7C, 7E from ID/OD. Inspected accessible area of Vertical Weld SV-2B from ID/OD. No relevant indications noted.
	2017 (R22)	EVT-1	Inspected accessible areas of Vertical/Radial Welds SV-2A, SV-7A, SV-7D, SV-8A, SV-8C from OD side. No relevant indications noted.

		Off-Axis EVT-1	Inspected SV-2A, SV-2B per EPRI Letter 2016-030. No relevant indications noted.
		Off-Axis UT	Inspected SV-5B/H4 interface per EPRI Letter 2016-030. The UT examination identified two indications across the H4 weld, in a semi-linear configuration and parallel to each other and to vertical weld SV-5B. The longest indication is 6.15" long with two short offsets. The second indication is 5.54" long. Inspected upper 20" of SV-5B with NRI.
		UT	Inspected vertical welds SV-4A, SV-4B, SV-5A, SV-5B, SV-6A with relevant indications in SV-4B, SV-5A, SV-5B. Only nominal crack growth was recorded at SV-5A and SV-5B. A short indication was recorded at SV-4B.
Shroud Support	1992 to present	UT or EVT-1	92 Outage: Inspected 0 and 180 deg access covers by UT. One planar indication detected at 180 deg, which is believed to be inherent to the fabrication process and is not ID connected. 94/95 Outage: Inspected 40" of H9 weld and accessible areas of 10 gusset plates used for tie-rod repair. 96 Outage: Inspected access hole cover at 0 deg, and inspected 36" of H9 weld and gusset plate welds at 3 tie-rod locations. No relevant indications noted.
	1998 (R13)	EVT-1 VT-3	Baseline completed per BWRVIP-07 and BWRVIP-38 guidelines for all shroud repaired tie rods and load transfer gusset plate welds. *7 out of 10 tie rod assemblies inspected (by EVT-1/VT-3) in Fall 1998. No relevant indications noted.

			*All load transfer gusset plate welds and 12 inches of H9 weld each side of the gussets were examined by EVT-1. 7 out of 10 gussets inspected in R13. No relevant indications noted.
		EVT-1	Examined by EVT-1 the access hole cover at 180 degrees. No relevant indications noted.
	2000/2002	N/A	No inspections during R14 and R15.
	2004 (R16)	EVT-1	Inspected two shroud support gusset plate welds and 12 inches of H9 top weld each side of the gussets. No relevant indications noted.
	2006 (R17)	EVT-1	Inspected all ten shroud repair tie-rod systems and corresponding shroud support gusset welds at same locations. No relevant indications were noted.
		EVT-1	Inspected top portion of horizontal weld H9 at each side of tie-rod locations and between gussets at 180°. No relevant indications were noted.
		VT-1	Inspected the access hole cover at 180°, with no relevant indications noted.
	2008 (R18)	N/A	No inspection performed in R18.
	2010 (R19)	VT-3 EVT-1	Inspected (6) non-tie rod gussets locations plate welds and H9 weld on each side of the gusset at the same location. No relevant indications were noted.
		VT-1/3	Inspected the access hole cover at 0 and 180°, with no relevant indications noted.
	2012 (R20)	EVT-1	Inspected 4 tie rod gusset locations (75, 135, 225, and 345 degrees) at the plate to RPV and support welds and also the H9

			welds on both sides of the gusset. No relevant indications were noted.
		EVT-1/ VT-3	Inspected 3 shroud repair tie rods (15, 135, and 255 degrees). No relevant indications were noted.
		EVT-1	Inspected the 0 degree Access Hole Cover. No relevant indications were noted.
	2014 (R21)	EVT-1	Inspected 4 gussets (30, 150, 240, and 330 degrees) at locations without tie-rods. Inspected gusset to plate, gusset to RPV, and H9 on both sides at each location. No relevant indications noted.
		EVT-1	Inspected 180 degree Access Hole Cover and accessible areas of H9 weld. No relevant indications noted.
		EVT-1/ VT-3	Inspected 3 shroud repair tie-rods (45, 225, and 315 degrees). No relevant indications noted.
		EVT-1	Re-inspected hook to gusset interface at 135 degrees. Verified proper seating and no evident signs of hook movement/chattering. No relevant indication noted.
	2017 (R22)	EVT-1	Inspected 6 gussets (15, 45, 165, 195, 255, and 315 degrees), gusset to plate, gusset to RPV, and H9 on both sides at each location, coinciding with tie-rod locations. No relevant indications noted.
		EVT-1/ VT-3	Inspected 4 shroud repair tie rods (75, 165, 195, and 345). Indications previously identified on the shroud ring segment in locations EDM'd for Tie Rod upper supports on 75°, 165°, 195°, and 345° locations. No significant change was noted from previous results; except,

			it was determined by vendor and owner LVIII examiners that previous recorded indication on the 75° Tie Rod bracket to shroud interface was not characteristic of an actual flaw and is non-relevant.
		EVT-1	Re-inspected 135° Tie-Rod lower hook interface with gusset plate. No recordable indications noted.
Core Spray Piping	1987 to present	VT-3, MVT-1 or EVT-1	IEB 80-13 of piping and welds in annulus. One clamp repair in 1988 at cracked weld in "B" loop at 190 deg below upper elbow piping. Welds were brushed and inspected by EVT-1 per BWRVIP-18 in Fall, 1996. No relevant indications found.
	1998 (R13)	EVT-1, MVT-1	Re-inspected 100% of loop "A" and "B" welds per BWRVIP-18 Guidelines (by EVT-1). No relevant indications noted, except for a rub-mark near CSA-10 weld. Support brackets were examined by MVT-1. No relevant indications noted.
	2000 (R14)	EVT-1	Re-inspected all Loop "A" and "B" creviced and T-box-to-pipe welds, including repair clamp welds per BWRVIP-18 Guidelines (by EVT-1). A relevant indication was noted on weld CSB-12. No other relevant indications were noted.
	2002 (R15)	EVT-1	Re-inspected all Loop "A" and "B" creviced and T-box-to-pipe welds; repair clamp at Loop "B" downcomer pipe; and rotating sample of pipe elbow upper/lower welds in Loop "A" at 10 degrees. No relevant indications noted.
		EVT-1	Re-inspected the indication noted in R14 on weld CSB-12. Level IIIs assessment is that the indication is now believed to be a scratch.

	2004 (R16)	EVT-1	Re-inspected all Loop "A" and "B" creviced and T-box-to-pipe welds; repair clamp welds at Loop "B" downcomer pipe; and rotating sample of pipe elbow upper/lower welds in Loop "A" at 170 degrees. No relevant indications noted.
	2006 (R17)	EVT-1	Re-inspected all Loop "A" and "B" creviced and T-box-to-pipe welds; repair clamp welds at Loop "B" downcomer pipe , and rotating sample of pipe elbow upper/lower welds in Loop "B" at 190 degrees. Also, inspected all bracket support welds, including RPV side for Loop "A" and "B". No relevant indications noted.
	2008 (R18)	EVT-1	Re-inspected all Loop "A" and "B" creviced and T-box-to-pipe welds; repair clamp welds at Loop "B" downcomer pipe; and rotating sample of pipe elbow upper/lower welds in Loop "B" at 350 degrees. No relevant indications noted.
	2010 (R19)	EVT-1	Re-inspected all Loop "A" and "B" creviced and T-box-to-pipe welds; repair clamp welds at Loop "B" downcomer pipe; and rotating sample of pipe elbow upper/lower welds in Loop "B" at 010 degrees. No relevant indications noted.
	2012 (R20)	EVT-1	Re-inspected all Loop "A" and "B" creviced and T-box-to-pipe welds; repair clamp welds at Loop "B" downcomer pipe; and rotating sample of pipe elbow upper/lower welds in Loop "A" at 170 degrees. No relevant indications noted.
	2014 (R21)	EVT-1	Re-inspected all Loop "A" and "B" creviced welds, T-box-to-pipe welds, and repair clamp welds at Loop "B" downcomer. Inspected pipe elbow upper/lower welds on Loop "B", "C"

			downcomer at 190 degrees. No relevant indications noted.
		EVT-1/ VT-3	Inspected all Core Spray Piping Bracket attachment welds to RPV and overall bracket condition. No relevant indications noted.
	2017 (R22)	EVT-1	Implemented the optimized scope. Re-inspected Loop "A" and "B" P1 hidden welds with limited access, Loop "B" 190 degree repair clamp welds and elbow welds on "D" downcomer at 350 degrees. No relevant indications noted.
Core Spray Sparger	1987 to present	VT-3, MVT-1 or EVT-1	IEB 80-13 of sparger and welds. MVT-1 and EVT-1 inspections per BWRVIP-18 in the Fall, 1996. An indication characterized as weld profile deficiency was recorded on spray nozzle D-28. Historical IVVI data was reviewed and the indication was previously noted and disposition as acceptable.
	1998 (R13)	EVT-1, MVT-1	Re-inspected 100% of sparger piping "A" and "B" welds per BWRVIP-18 Guidelines (EVT-1/MVT-1) including tee boxes, end caps, drain welds, and support brackets. No relevant indications noted.
	2000 (R14)	N/A	No inspections performed.
	2002 (R15)	EVT-1	Re-inspected all T-box and end caps to sparger pipe welds at Loops "A", "B", "C", and "D". No relevant indications noted.
		VT-1	Re-inspected Sparger "C" and "D" nozzle welds, and supporting brackets at "A" and "B". No relevant indications noted.
	2004 (R16)	VT-1	

	2006 (R17)	EVT-1, and VT-1	Re-inspected all sparger bracket support welds at "C" and "D". No relevant indications noted. Re-inspected by EVT-1 all T-box and end caps to pipe welds, and by VT-1 all bracket welds at spargers "A", "B", "C" & "D". Re-inspected by VT-1 all nozzle and drain to sparger welds at spargers "A" & "B". No relevant indications noted.
	2008 (R18)	N/A	No inspections performed in R18.
	2010 (R19)	EVT-1	Re-inspected by EVT-1 on all S1,S2 and S4, T-box and end caps to pipe welds, and by VT-1 all (SB) bracket welds at spargers "A", "B", "C" & "D". Re-inspected by VT-1 all nozzle and drain to sparger welds at spargers "C" & "D". No relevant indications noted.
	2012 (R20)	N/A	No sparger inspections performed in R20.
	2014 (R21)	EVT-1/ VT-1	Inspected by EVT-1 all S1,S2 and S4, T-box and end caps to pipe welds, and by VT-1 all (SB) bracket welds at spargers "A", "B", "C" & "D". Re-inspected by VT-1 all nozzle and drain to sparger welds at spargers "A" & "B". No relevant indications noted.
	2017 (R22)	N/A	No sparger inspections performed in R22.
Top Guide (Rim, etc.)	1988, 92 and 94/95	VT-3, and EVT-1	2 cells inspected in 1988 and in 1992; 4 cells in 1994. Additional inspections included, alignment wedges, hold down bolts, and rim welds at several locations (EVT-1 at rim welds in 94/95). No relevant indications noted.
	1998 (R13)	N/A	No inspections performed.

	2000 (R14)	VT-1, and VT-3	A total of 4 hold down assemblies were examined by VT-1 and 3 alignment pin assemblies by VT-3 per BWRVIP-26 Guidelines. No relevant indications were noted.
	2002 and 2004	N/A	No inspections in R15 and R16.
	2006 (R17)	VT-1 and VT-3	Inspected by VT-1 hold-down assemblies at 0 and 180 degrees (top only as below top guide is inaccessible). Inspected sampling of top guide surfaces by VT-1/VT-3. Also, inspected aligner pins at 0 and 180 degrees by VT-1. No relevant indications noted.
	2008 (R18)	VT-1	Inspected by VT-1 hold-down assemblies at 90 and 270 degrees (top only as below top guide is inaccessible). Also, inspected aligner pins at 90 and 270 degrees by VT-1. No relevant indications noted.
	2010 (R19)	EVT-1	Inspected by EVT-1 (8) grid beam cell locations, including plates and intersection locations as specified per BWRVIP-183. No relevant indications.
	2012 (R20)	VT-1	Inspected 0 and 180 degree aligner assemblies from the top of the guide only. No relevant indications noted.
	2014 (R21)	N/A	No inspections performed.
	2017 (R22)	EVT-1	Inspected Top Guide Grid Beams at core locations 10-07, 10-39, 14-31, 18-19, 34-11, 34-19, 38-39, and 50-27. No relevant indications noted.
		VT-1	Inspected Top Guide Hold Down Assemblies at 90 and 270 degrees. No relevant indications noted.

Core Plate (Rim, etc.)	1992 and 94	VT-3	Inspection at one core plate in 1992. Inspected approximately 25% of hold down bolting in 1994/95. No relevant indications noted.
	1998 (R13)	VT-3	Inspected 100% of hold down bolting. No relevant indications noted.
	2000 (R14)	VT-3	Inspected core plate plugs at 5 core locations. No relevant indications noted.
	2002 (R15)	N/A	No inspections performed.
	2004 (R16)	VT-3	Inspected a total of 6 core plate plugs (at two locations). No relevant indications noted.
	2006 (R17)	VT-3	Inspected core plate plugs and the surrounding core plate surface at four LPRM locations. No relevant indications noted.
	2008 (R18)	VT-1	Inspected 33 core plate hold down bolt assemblies from 0-180 degrees with no indications noted.
		VT-3	Inspected 10 core plate plugs @ cell location 12-37, 28-29 and 36-37 to meet 10% sampling requirements. No indication noted, all plugs inspected were properly seated, with no evidence of movement.
	2010 (R19)	VT-3	Inspected a total of 8 core plate plugs @ cell locations 28-21 and 28-37. No relevant indications noted.
	2012 (R20)	VT-1	Inspected a total of 10 hold down bolts with no relevant indications noted.
		VT-3	Inspected a total of 8 core plate plugs at locations 12-21, 20-21, and 36-13. No relevant indications noted.

	2014 (R21)	VT-3	Replaced all 77 core plate plugs. Performed as-left VT-3 with no relevant findings.
	2017 (R22)	VT-3	Inspected 50% (36) core plate rim hold-down bolting, 19% (15) core plate plugs and Core Plate location 38-39. No relevant indications noted except a maintenance issue with alignment pin, that was acceptably resolved.
SLC	2000 (R14)	EVT-2	Performed Enhanced VT-2 on SLC nozzle-to-safe end weld during RPV System Leakage Test per BWRVIP-27 Guidelines. Test was "Accepted".
	2002/2004	EVT-2	Performed Enhanced VT-2 on SLC nozzle-to-safe end weld during RPV System Leakage Test per BWRVIP-27 Guidelines. Test was "Accepted".
	2006 (R17)	PT	Performed liquid penetrant examination on Standby Liquid Control (SLC) nozzle-to-safe end weld per BWRVIP-27 Guidelines with no recordable indications noted.
	2008 (R18)	N/A	No Examination required based on 2006 inspection.
	2010 (R19)	PT	Performed liquid penetrant examination on SLC nozzle-to-safe end weld per BWRVIP-27 Guidelines with no recordable indications noted.
	2012 (R20)	UT	Performed UT exam of SLC nozzle. No relevant indications were found.
	2014 (R21)	N/A	No inspections performed.
	2017 (R22)	N/A	No inspections performed.

Jet Pump Assembly	1987 to1994	VT-1, VT-3 and UT	Inspected all riser brace attachment welds by VT-1. No relevant indications but found debris at some weld locations. Have replaced all jet pump beams in 1992 because one exhibited indications of cracking by UT exam. Also inspected pump assembly, sensing lines, supports and diffuser to shelf welds, all by visual. No relevant indications but found debris at some weld locations. Cracking at a Japanese BWR of a Jet Pump riser weld prompted FitzPatrick to review IVVI tapes from previous refueling outages, including 1996 outage. Viewed accessible areas at two welds by VT-1, and at three welds by VT-3 examination. No cracking was found in the reviewed welds.
	1998 (R13)	MVT-1, and VT-3	Inspected by MVT-1 50% of all Jet Pumps (#7 to #16) for component safety priority H (high) and M (medium), per BWRVIP-41 Guidelines. No relevant indications noted. Interferences in the annulus region restricted inspection of AD-1 and AD-3b welds. Inspected by VT-3 sensing lines/brackets at same jet pumps (#7 to #16). No relevant indications noted.
	2000 (R14)	N/A	No inspections during R14.
	2002 (R15)	EVT-1, VT-1, and VT-3	Completed inspection of Jet Pumps 5 and 6, and portions of Jet Pumps 19 and 20, with no relevant indications noted. Used inspections guidelines of BWRVIP-41 and 48. There are no MX-1 welds on the inlet-mixer, but there are IN-4 and MX-2 welds. Interferences in the annulus region (gussets) prevented inspection of the AD-3b welds.

		VT-1	Inspected Jet Pump Beams at #5, 6, 19 and 20, at locations recommended by BWRVIP-41, and by latest Operating Experience. No relevant indications noted.
	2004 (R16)	EVT-1	Performed "High – priority" riser weld inspections at Jet Pumps #1, 2, 3, 4, 17 and 18. No relevant indications noted. Performed diffuser/adapter assembly weld inspections (Also "High"- priority) at Jet Pumps #17 and 18. No relevant indications noted.
		VT-1	Performed wedge bearing surface (WD-1) inspections at Jet Pumps #17 and 18. No relevant indications noted.
	2006 (R17)	UT	Inspected all twenty jet pump beams with no relevant indications recorded.
		UT	Inspected "High"- priority welds AD-1, AD-2, AD-3a, AD-3b, DF-2 and DF-3 at all 20 jet pumps (JP) with recordable indications at welds DF-2 (JP #1 & 3) and AD-3b/DF-3 (JP #12 & 17). All indications were satisfactorily disposition.
		EVT-1	Inspected "High"- priority welds DF-2 at JP #1 & 3 and DF-3 at JP #17 based on UT results. No recordable indication noted.
		EVT-1	Inspected riser welds RS-1, RS-2 and RS-3 at JP #19/20 & RS-3 at JP #3/4. Also inspected RS-6, RS-7, RS-8, RS-9 and RB welds at JP #1/2, 3/4, 17/18 & 19/20 with no recordable indications noted.

		EVT-1	Inspected weld DF-1 at JP #1/2, ¾, 17/18 & 19/20 with no recordable indications noted.
		VT-1	Inspected wedge bearing surfaces (WD-1) at JP #1, 2, 3, 4, 19 & 20 with no relevant indications noted.
	2008 (R18)	EVT-1	Inspected "Medium – priority welds IN-4 and MX-2 at JP #1-4 & 17-20 with no relevant indications noted.
		EVT-1	Inspected wedge bearing surfaces (WD-1) at JP #7-12 & 20 with no relevant indications noted.
		VT-1/3	Inspected JP sensing line @ #1-4, 7-12 and 17-20, including bracket and attachment welds to diffuser with no relevant indications noted.
		EVT-1	Inspected the ID of JP #12 & 17 DF-3 welds to aid in evaluating previous indications identified by UT in RO17. No indications were noted visually from the ID and surface geometry appears normal with no undercut or root concavity noted.
	2010 (R19)	EVT-1	Inspected RS-6, RS-7, RB welds at JP #7 thru 16 with no recordable indications noted.
		EVT-1	Inspected RB-1and 2, RB leaf to pad and Pad to vessel welds @ JP #7 thru 16 with no relevant indications noted.
		EVT-1	Inspected "Medium – priority welds IN-4, MX-2 and DF-1 at JP #7-16 with no relevant indications noted.
		EVT-1	Inspected RS-8 and 9 welds on all Jet Pump as required per VIP mandate. No relevant indications were noted.

		VT-1	Inspected WD-1 on Jet Pumps #1-6, 13-20 as required by VIP mandate with no relevant indications noted.
		EVT-1	Inspected RS1, 2, and 3 welds @ JP locations #7-16 with no relevant indications noted.
		UT	Re-Inspected "High"- priority welds AD-1, AD-2, AD-3a, AD-3b, DF-2 and DF-3 at all 20 jet pumps (JP) with Westinghouse JAMIS tool. Previous recordable indications at welds AD-3b/DF-3 (JP #12 & 17) were inspected and found to have no change in size from R17. Previous indications at DF-2 (JP #1 & 3) were determined to be non-relevant. A new relevant indication was identified on JP #8. All indications were satisfactorily disposition and bounded by previous evaluations.
	2012 (R20)	EVT-1	Inspected "Medium" priority DF-1, IN-4, and MX-2 welds of jet pumps #1-4 and 17-20. No relevant indications found.
		EVT-1	Inspected RB-1 and 2 (leaf to pad and yoke) welds on jet pumps #1-6 and 17-20 with no relevant indications noted.
		EVT-1	Inspected RS-6 and 7 welds on jet pumps #1-4 and 17-20 with no relevant indications noted.
	2014 R21)	UT	Inspected BB-1, BB-2, and BB-3 regions on all 20 Jet Pump Beams. No relevant indications noted. All re-inspections are complete for this interval.
	2017 (R22)	EVT-1	Inspected RS-1, RS-2, RS-3, RS-6, RS-7, RS-8 and RS-9 welds on JP #5/6, 7/8 and 9/10. No relevant indications noted.

		EVT-1	Inspected DF-1 on JP #5, 6, 7, 8, 9, and 10 welds. No relevant indications noted.
		EVT-1	Inspected AD-1, AD-2, AD3a/b, DF-2 and DF-3 welds on JP #8, 9, 10, 12, and 17. No relevant indications noted.
		VT-3	Inspected Sensing Lines on JP #7, 8, 9, 10. No relevant indications noted.
		VT-1	Inspected JP Wedge bearing Surface, and Wedge Rods WD-1 on all JP's. No relevant indications noted.
CRD Guide Tube	1992	VT-3	Inspected stub tube to vessel and stub tube to housing welds for 9 tubes. No relevant indications.
	1998 (R13)	N/A	No inspections performed.
	2000 (R14)	EVT-1 and, VT-3	Inspected accessible surfaces at 3 Guide Tubes per BWRVIP-47 Guidelines. Inspected accessible surfaces at 8 Guide Tubes (VT-3). No relevant indications noted.
	2002 (R15)	EVT-1 and VT-3	Inspected accessible surfaces at 4 Guide Tubes per BWRVIP-47 Guidelines. No relevant indications noted.
	2004 (R16)	N/A	No inspections performed.
	2006 (R17)	EVT-1 and VT-3	Inspected accessible surfaces at three Guide Tubes. No relevant indications noted.
	2008 (R18)	N/A	No Inspections performed.
	2010 (R19)	EVT-1 and VT-3	Inspected CRGT-1, 2 and 3 accessible surfaces at 4 Guide Tubes per BWRVIP-47A Guidelines. No indications noted.
	2012 (R20)	N/A	No inspections performed in R20.
	2014 (R21)	N/A	No inspections performed.

	2017 (R22)	VT-3	Inspected Fuel Support Casting (FSC) (Cell location 38-39), alignment pin (ARPIN-10), accessible areas of the guide tube (including CRGT-1) and a general condition of the cell.
CRD Stub Tube	1992 1998 2000/2002/ 2004/2006/ 2008/2010/ 2012/2014/ 2017	VT-3 N/A N/A	See above. No inspections during R13. No inspection requirements per BWRVIP-47 Guidelines.
In-Core Housing	1992 1998 2000 thru 2017	VT-1 N/A N/A	No relevant indications. No inspections during R13. No inspection requirements per BWRVIP-47 Guidelines.
Dry Tube	1994 1998 (R13) 2000 (R14) 2002 (R15) 2004 (R16) 2006 (R17) 2008 (R18)	VT-1 N/A VT-1 VT-1 N/A VT-1 VT-1	No indications. Replaced all dry tubes in 1987/88. No inspections performed. Inspected 4 IRM/SRM In Core Dry Tubes per GE SIL-409 and GE RICSIL-073 Guidelines. No relevant indications noted. Re-inspected SRM Core Dry Tube 20-17 per GE SIL 409 and GE RICSIL-073 Guidelines. No relevant indications noted No inspections performed. Inspected dry tubes at three locations with no relevant indications noted. Inspected dry tubes at SRM locations 20-17, 28-41 and IRM location 20-25 per GE-SIL-409 Rev.2 with no relevant indications noted.

	2010 (R19)	VT-1	Inspected dry tubes at SRM locations 36-25 and IRM location 12-33, 28-33, 36-09 and 12-09 per GE-SIL-409 Rev.2 with no relevant indications noted
	2012 (R20)	VT-3	Inspected 4 dry tubes at IRM locations 12-41, 20-33, 28-25, and 36-41 per GE-SIL-409 Rev. 2. No relevant indications.
	2014 (R21)	VT-3	Replaced all 12 SRM/IRM dry tubes. Performed as-left VT-3 with no relevant findings.
	2017 (R22)	VT-3	Inspected 4 dry tubes at IRM locations 12-09, 36-09, 36-41 and SRM location 12-33. No recordable indications noted.
Instrument Penetrations	1992	VT-1	Two inspected in 1992. No relevant indications noted.
	1998 (R13)	N/A	No inspections performed.
	2000 (R14)	VT-2	Performed VT-2 ISI System Leakage Exam Test at 6 instrument nozzles (during RPV System Test) per BWRVIP-49 Guidelines. Test was conducted to the extent possible with insulation installed and shield doors closed. Test was "Accepted".
	2002/2004/ 2006/ 2008 / (R15-R18)	VT-2	Performed a VT-2 leakage test at 6 instrument nozzles (same as in R14-Fall 2000). Test was "Accepted" with no leakage noted.
	2010 (R19)	PT	Inspected 2 instrument nozzles. Inspection was "Accepted" with no leakage noted.
	2012 (R20)	PT	Inspected 2 instrument nozzles. Inspection was "Accepted" with no leakage noted.

	2014 (R21)	PT	Inspected 2 instrument nozzles. Inspection was "Accepted" with no leakage noted.
	2017 (R22)	N/A	No inspections performed.
Vessel ID Brackets	1987 to present	VT-1, VT-3, EVT-1 for core spray	Section XI inspections of jet pump riser brace, dryer, feedwater sparger, core spray, and surveillance capsule holder brackets, performed once per interval. Last inspection was Fall, 96 VT-3, or VT-1 if in beltline region. EVT-1 for core spray. No relevant indications noted.
	1998 (R13)	MVT-1	Inspected Core Spray Brackets and Jet Pump Riser Brace Attachments per BWRVIP-48 requirements. No relevant indications noted.
	2000 (R14)	N/A	No inspections in R14.
	2002 (R15)	EVT-1	Inspected Jet Pump Riser Brace (at JP #5/6 and #19/20); and Feedwater Sparger Bracket Attachments (at all 8-locations), per BWRVIP-48 requirements. No relevant indications noted.
	2004 (R16)	EVT-1	Inspected shroud support gusset plate welds to RPV wall at two locations, with no relevant indications.
		EVT-1, VT-3	Inspected all four steam dryer support brackets and attachment welds to RPV wall, with no relevant indications.
		VT-3	Inspected all four steam dryer hold-down brackets and attachment welds to RPV top head, with no relevant indications noted.
		EVT-1	Inspected guide rod and bracket to RPV weld at 180°, with no relevant indications noted.

	2006 (R17)	EVT-1	Inspected all core spray piping support bracket welds to RPV wall, with no recordable indications noted.
		EVT-1	Inspected shroud support gusset plate welds to RPV wall at ten locations, with no relevant indications noted.
		EVT-1	Inspected riser brace leaf welds to RPV wall at JP #01/02, 03/04, 17/18 & 19/20, with no recordable indications noted.
		VT-1	Inspected surveillance sample holder brackets upper and lower) at 030° and 120° to RPV wall, with no relevant indications noted.
		VT-3	Inspected guide rod and bracket to RPV weld at 000°, with no recordable indications noted.
	2008 (R18)	N/A	No inspections performed.
	2010 (R19)	EVT-1	Inspected shroud support gusset plate welds to RPV wall at six locations, with no relevant indications noted.
		EVT-1	Inspected riser brace leaf welds to RPV wall at JP #7-16, with no recordable indications noted.
		EVT-1	Inspected all feedwater support brackets and attachment welds to RPV wall, with no relevant indications.
	2012 (R20)	EVT-1	Inspected shroud support gusset plate welds to RPV wall at 4 locations, no relevant indications noted.
		EVT-1	Inspected riser brace leaf welds to RPV wall at Jet Pumps # 1-6 and 17-20.

	2014 (R21)	EVT-1	Inspected 4 shroud support gusset plate welds to RPV and H9 on both sides at 4 locations. No relevant indications noted.
		EVT-1/ VT-3	Inspected core spray piping bracket to RPV welds and overall bracket condition. No relevant indications noted.
		VT-1/VT-3	Inspected upper and lower surveillance specimen holder brackets at 300 degrees. No relevant indications noted.
		VT-3	Inspected 180 degree guide rod and RPV bracket attachment. No relevant indications noted.
		EVT-1	Inspected all Steam Dryer Support Brackets. No relevant indications noted.
		VT-3	Inspected all Steam Dryer Hold Down Brackets. No relevant indications noted.
	2017 (R22)	EVT-1	Inspected shroud support gusset plate welds (H9) to RPV wall at 6 locations. No relevant indications noted.
		VT-1/VT-3	Inspected upper and lower Surveillance Sample Holder Brackets at 30° and 120°. No recordable indications noted.
		VT-3	Inspected upper Guide Rod Bracket Attachment at 0°. No relevant indications noted.
LPCI Coupling	N/A	N/A	Not applicable to this plant.

Fuel Support Castings	1998 (R13)	VT-3	Inspected accessible areas at fuel support castings during in-process control rod blade change-out. No relevant indications noted.
	2000 (R14)	VT-3	Inspected accessible areas at fuel support castings during in-process control rod blade change-out. No relevant indications noted.
	2002 (R15)	VT-3	Inspected accessible areas at four fuel support castings during in-process control rod blade change-out. No relevant indications noted.
	2004 (R16)	N/A	No inspections performed.
	2006 (R17)	VT-3	Inspected accessible areas at fuel support castings at four locations. No relevant indications noted.
	2008 (R18)	N/A	No Inspections performed.
	2010 (R19)	N/A	No Inspections performed.
	2012 (R20)	N/A	No inspections performed.
	2014 (R21)	N/A	No inspections performed.
	2017 (R22)	VT-3	Inspected accessible areas at fuel support casting (FSC) Cell 38-39 in support of condition evaluation and maintenance activities.

CRD Nozzle NIR	1998 (R13)	VT-1	The Control Rod Drive Nozzle Inner Radius was examined. No relevant indications noted.
	2000 (R14)	EVT-1	Examined the CRD Nozzle Inner Radius, including adjacent vessel wall area. No relevant indications noted.
	2002-2008	N/A	No inspections in R15 – R18.
	2010 (R19)	EVT-1	Examined the CRD Nozzle Inner Radius, including adjacent vessel wall area. No relevant indications noted.
	2012 (R20) 2014 (R21) 2017 (R22)	N/A N/A N/A	No inspections performed. No inspections performed. No inspections performed.
Steam Dryer Moisture Separator	1998 (R13)	VT-3	Inspected 25% of shroud head bolts at storage pit. No relevant indications noted.
	2000 (R14)	VT-3 and EVT-1	Re-inspected by VT-3 all areas of the steam dryer support ring and by EVT-1 previously found cracks (1992/1994). A total of 10 indications were noted in 2000 (R14), with no discernable changes from previous inspection.
	2002 (R15)	N/A	No inspections performed.
	2004 (R16)	VT-1 and VT-3	Inspected steam dryer integrity per SIL 644 Supplement 1 (steam dryer integrity) and INPO OE 18796 (steam dryer hood crack and tie bar recordable visual indications) guidelines. Two relevant indications areas were noted. These indications resulted in expanded scope with additional brushing and evaluations. These indications are in the HAZ of vibration block welds and at a drain channel. All indications were satisfactorily dispositioned by calculations. Plans to re-inspect in R17.

		EVT-1/ VT-3	Inspected steam dryer hold-downs and support brackets and attachment welds with no relevant indications noted.
		VT-3	Inspected steam separator lifting rod eye assemblies and 25% of shroud head bolts with no relevant indications noted.
	2006 (R17)	VT-1	Inspected selected welds on steam dryer (per requirements of BWRVIP-139 over those recommended by SIL 644). A relevant indication was noted at the intersection of H-2 and V-7 welds (SW quadrant) and the weld was ground out and repaired in R17.
		VT-1	Inspected previous relevant indications noted in R16 (i.e., at eight vibration block welds and at the weld adjacent to drain channel #8) with no observed change noted since R16. The linear indication at one vibration block was re-configured from previous R16 reporting.
	2008 (R18)	VT-1	Inspected previous relevant indications (i.e., eight vibration blocks and weld adjacent to drain channel #8) with no change to indication size noted.
		VT-1	Inspected R17 weld repair @ weld H2 & V7 intersection in SW quadrant with no relevant indication noted.
		VT-1	Inspected upper support ring including previous indication noted in R14. 9 of the 10 previous indications have been determined to be scratches and are considered non-relevant. No other indications noted.
		VT-3	Inspected shroud head bolts #10 through 19 based on OE31414 with no relevant indications noted.

		VT-1	Inspected 25% of upper and middle support ring gussets on moisture separator based on OE25795. A linear indication was noted on the #5 upper gusset. Scope was expanded to include all upper and mid support ring gussets and linear indications were also identified on upper and mid gusset #6. The indications were evaluated and found acceptable. Additionally during the gusset examinations a broken tie strap was noted on the separator at 0 degrees. The broken strap was removed per EC10523 and evaluated for acceptance. Note: OE27679 was issued to inform industry of the condition.
	2010 (R19)	VT-1	Inspected previous relevant indications (i.e., at eight vibration block welds and at weld adjacent to drain channel #8) with no change noted.
		VT-1	Inspected R17 weld repair @ weld H2 and V7 intersection in SW quadrant with no relevant indications noted.
		VT-1	Re-examined previously identified upper and mid support gussets @ locations 5 and 6 with no change noted.
		VT-1	Re-examined previously identified broken tie strap remnant @ 0 degrees with no change noted.
		VT-3	Inspected shroud head bolts #29 through 36 based on OE31414 with no relevant indications noted.

	2012 (R20)	VT-1	Inspected previous relevant indications (i.e., eight vibration block welds and weld adjacent to drain channel #8) with no change noted.
		VT-1	Inspected R17 weld repair @ weld H2 and V7 intersection in SW quadrant with no relevant indications noted.
		VT-1	Re-examined previously identified upper and mid support gussets @ locations 5 and 6 with no change noted.
		VT-1	Re-examined previously identified broken tie strap remnant @ 0 degrees with no change noted.
	2014 (R21)	VT-1	Inspected previous relevant indications on eight vibration block welds and weld adjacent to drain channel #8 with no changed noted.
		VT-1	Inspected R17 weld repair @ weld H2 and V7 intersection in SW quadrant with no relevant indications noted.
		VT-1/VT-3	Completed dryer external overview per BWRVIP-139 and SIL 644 Rev. 2 guidance. Inspected all outer hood bank, outer end bank plate, cover plate, manway cover, ring segment, and tie-bar welds. Inspected all inner hood bank plate welds, drain channel welds, and lifting rod assemblies (including jacking bolts, earthquake blocks, and seal plates) in the SW and NE quadrants. Performed dryer VT-3 overview. No relevant indications identified.
		VT-1	Re-examined previously identified upper and mid support gussets @ locations 5 and 6 with no change noted.

	2017 (R22)	VT-1	Re-examined previously identified broken tie strap remnant @ 0 degrees with no change noted.
		VT-1	During examination of previous indication at mid support gusset #5, a new indication was identified in the vicinity of the existing one. The new indication is approximately 0.5'' and is in the upper HAZ of the gusset-to-support-ring weld. Review of previous inspections lead to the belief that this indication has existed since at least 2010 but was not called as it was not easily discernable from the amount of crud covering it. There appears to be no change. This newer indication is bounded by the evaluation performed in 2008 for the indications identified then.
		VT-1	Re-inspected indications on Upper Support Ring Gussets #5 and #6 and Middle Support Ring Gusset #6. No significant change in these indications.
		VT-3	Re-inspected the cut Tie Bar Strap at 0°, with no significant change in the condition.

Surveillance Capsule Specimen Holder	2000 (R14)	VT-1/VT-3	Inspected upper and lower mounting bracket at the 300 degree location. Also inspected condition of the holder (VT-3). No relevant indications noted.
	2002(R15)/ 2004(R16)	N/A	No inspections performed.
	2006 (R17)	VT-1/VT-3	Inspected upper and lower mounting bracket welds at 30 and 120 degrees. No relevant indications noted.
	2008 (R18)/ 2010 (R19)/ 2012 (R20)	N/A	No inspections performed.
	2014 (R21)	VT-1/VT-3	Inspected upper and lower mounting brackets at 300 degree location and attachment welds. Also inspected condition of the holder (VT-3). No relevant indications noted.
	2017 (R22)	VT-1/VT-3	Inspected upper and lower mounting brackets at 30° and 120° location and attachment welds. Also, inspected condition of the holder (VT-3). No relevant indications noted.
Lower Plenum	2000 (R14)	VT-1/VT-3	Inspected by VT-3 the accessible areas of lower plenum per BWRVIP-47 guidelines. No relevant indications noted. Inspected by VT-1 the accessible areas of the bottom head drain. After removal of debris, the area was re-examined and found acceptable.
	2002-2017	N/A	No inspections performed due to lack of access.

Feedwater Sparger	2002 (R15)	VT-3	Inspected Sparger pipe assemblies at 45, 135, 225, and 315 degrees including sparger welds and end brackets. No relevant indications noted.
		VT-1	Inspected junction t-box welds and nozzle inner radius (NIR) at 45, 135, 225, and 315 degrees. No relevant indications noted.
		UT	Inspected the NIR at all 4 locations. No relevant indications noted.
	2004 & 2006	N/A	No inspections performed.
	2008 (R18)	VT-1/3	Inspected sparger brackets at 45, 135, 225, and 315 degrees based on OE24382 for wear identified. Brackets at 45 and 135 degrees were noted to have bracket wear around the pin. The condition was evaluated and found acceptable.
	2010 (R19)	VT-3	Inspected sparger pipe assemblies at 45, 135, 225, and 315 degrees including sparger welds and end brackets. No relevant indications noted.
		VT-1/ EVT-1	Inspected junction t-box welds and NIR at 45, 135, 225, and 315 degrees. No relevant indications noted.
		VT-1	Re-examined sparger brackets at 45 and 135 degrees for wear noted in R18. No change was identified.
	2012 (R20)	VT-1	Re-examined sparger brackets at 45 and 135 degrees for wear noted in R18. No change was identified.
	2014 (R21)	VT-1	Re-examined sparger brackets at 45 and 135 degrees for wear noted in R18. No change was identified.

	2017 (R22)	VT-1	Re-examined sparger brackets at 85°, 95°, and 175°, with no significant changes in indication conditions.
Dissimilar Metal Welds	2004 (R16)	UT	Performed UT on DM welds 24-10-131 and 24-10-132 and nozzle N-9-C1 overlay with no relevant indications noted.
	2006 (R17)	UT	Performed UT of nozzle to safe end on the following welds with no relevant indications noted: N-1B-SE N-2H-SE N-2K-SE
	2008 (R18)	UT	Performed UT of nozzle to safe end on the following welds with no relevant indications noted: N-1A-SE N-2A-SE N-2B-SE N-2D-SE N-2E-SE N-2F-SE N-2G-SE N-2J-SE N-5A-SE N-8A-SE N-8B-SE
		UT	Performed UT on nozzle to safe end N-2C-SE and an identified one axial location approximately ½'' depth and ¾'' wide. The indication was located on the butter to butter and was ID connected. Assume the flaw to be IGSCC. The weld was overlay and found acceptable.
	2010 (R19)	UT	Performed UT on CRD return cut and cap overlay with no relevant indications noted.

		UT	Re-examined N-2C-SE overlay from R18 with no relevant indications noted.
		UT	Performed UT on DM welds 24-10-130, 24-10-131, 24-10-132, 24-10-142, 24-10-143, and 24-10-144 with no relevant indications noted.
	2012 (R20)	UT	Performed UT on N1B Recirc Outlet nozzle to safe end weld, and N2H and N2K recirc inlet nozzle to safe end welds with no relevant indications noted.
	2014 (R21)	UT	Performed UT on N-5A Core Spray and N-8A, 8B Jet Pump Instrumentation nozzle to safe end welds with no relevant indications noted.
	2017 (R22)	UT	Performed UT on DM welds 24-10-131, 24-10-132, 24-10-142, 24-10-143, and 24-10-144 with no relevant indications. Performed UT on DM weld 24-10-130. An axial indication was identified. It was located within the weld and butter. The postulated length was 0.95”, which encompasses the full width of the butt-weld and 0.20” of the stainless steel heat-affected zone (HAZ). The flaw is assumed to be caused by IGSCC. The weld was overlaid. Performed UT of nozzle to safe end on the following nozzles with no relevant indications: N2B N2D N2E N2F N2G N2J

			Note: These welds were examined as a result of the expanded scope for the indication found on weld 24-10-130.
FOSAR	2008 – 2012	VT-3	Scheduled 12 hour windows for cleaning and (Foreign Object Search and Retrieval) FOSAR in annulus.
	2014 (R21)	VT-3	No scheduled FOSAR windows. FOSAR completed at areas in the annulus where inspections were being performed.
	2017 (R22)	VT-3	Completed a 360° FOSAR examination in areas of annulus.

Request for Relief for the Use of Encoded Phased Array Ultrasonic Examination Techniques In Lieu of Radiography In Accordance with 10 CFR 50.55a(z)(1)

(The following relief request is a duplicate of the Exelon relief request as approved in the June 5, 2017 Safety Evaluation Report. Revisions for the James A. FitzPatrick Nuclear Power Plant are identified with revision bars.)

1. ASME Code Component(s) Affected:

All American Society of Mechanical Engineers (ASME), Boiler & Pressure Vessel (B&PV) Code, Section XI, ISI ferritic piping butt welds requiring radiography during repair/replacement activities.

2. Applicable Code Edition and Addenda:

PLANT	INTERVAL	EDITION	START	END
James A. FitzPatrick Nuclear Power Plant	Fifth	2007 Edition through 2008 Addenda	August 1, 2017	June 15, 2027

3. Applicable Code Requirement:

10 CFR 50.55a(b)(2)(xx)(B) requires that "The NDE provision in IWA–4540(a)(2) of the 2002 Addenda of Section XI must be applied when performing system leakage tests after repair and replacement activities performed by welding or brazing on a pressure retaining boundary using the 2003 Addenda through the latest edition and addenda incorporated by reference in paragraph (a)(1)(ii) of this section." IWA-4540(a)(2) of the 2002 Addenda of Section XI requires that the nondestructive examination method and acceptance criteria of the 1992 Edition or later of Section III be met prior to return to service in order to perform a system leakage test in lieu of a system hydrostatic test. The examination requirements for ASME Section III, circumferential butt welds are contained in the ASME Code, Section III, subarticle NB-5200, NC-5200 and ND-5200. The acceptance standards for radiographic examination are specified in subarticle NB-5300, NC-5300 and ND-5300.

IWA-4221 requires that items used for repair/replacement activities meet the applicable Owner's Requirements and Construction Code requirements when performing repair/replacement activities. IWA-4520 requires that welded joints made for installation of items be examined in accordance with the Construction Code identified in the Repair/Replacement Plan.

4. Reason for Request:

Replacement of piping is periodically performed in support of the Flow Accelerated Corrosion (FAC) program as well as other repair and replacement activities. The use of encoded Phased Array Ultrasonic Examination Techniques (PAUT) in lieu of radiography (RT) to perform the required

examinations of the replaced welds would eliminate the safety risk associated with performing RT, which includes the planned exposure and the potential for accidental personnel exposure. PAUT minimizes the impact on other outage activities normally involved with performing RT such as limited access to work locations and the need to control system fill status because RT would require a line to remain fluid empty in order to obtain adequate examination sensitivity and resolution. In addition, encoded PAUT has been demonstrated to be adequate for detecting and sizing critical flaws.

Exelon Generation Company, LLC (Exelon) requests approval of this proposed alternative to support anticipated piping repair and replacement activities for the James A. FitzPatrick Nuclear Power Plant for the fifth interval.

5. Proposed Alternative and Basis for Use:

Exelon is proposing the use of encoded PAUT in lieu of the code-required RT examinations for ISI Class 1 and 2 ferritic piping repair/replacement welds. Similar techniques are being used throughout the nuclear industry for examination of dissimilar metal welds, and overlaid welds, as well as other applications including ASME B31.1 piping replacements. This proposed alternative request includes requirements that provide an acceptable level of quality and safety that satisfy the requirements of 10 CFR 50.55a(z)(1). The capability of the alternative technique is comparable to the examination methods documented in the ASME Code Sections III, VIII, and IX, and associated code cases (References 1, 3, 5, 6, 8, 9, 10, 11, 12 and 13) related to using ultrasonic examination techniques for weld acceptance. The examinations will be performed using personnel and procedures qualified with the requirements of Section 5.1 below.

The electronic data files for the PAUT examinations will be stored as part of the archival-quality records. In addition, hard copy prints of the data will also be included as part of the PAUT examination records to allow viewing without the use of hardware or software.

5.1 Proposed Alternative

Exelon is proposing to perform encoded PAUT examination techniques using demonstrated procedures, equipment and personnel in accordance with the process documented below:

(1) The welds to be examined shall meet the surface conditioning requirements of the demonstrated ultrasonic procedure.

(2) The welds to be examined shall be conditioned such that transducers properly couple with the scanning surface with no more than a 1/32 in. (0.8 mm) gap between the search unit and the scanning surface.

(3) The ultrasonic examination shall be performed with equipment, procedures, and personnel qualified by performance demonstration.

(4) The examination volume shall include 100% of the weld volume and the weld-to-base-metal interface.

(a) Angle beam examination of the complete examination volume for fabrication flaws oriented parallel to the weld joint shall be performed.

(b) Angle beam examination for fabrication flaws oriented transverse to the weld joint shall be performed to the extent practical. Scan restrictions that limit complete coverage shall be documented.

(c) A supplemental straight beam examination shall be performed on the volume of base metal through which the angle beams will travel to locate any reflectors that can limit the ability of the angle beam to examine the weld. Detected reflectors that may limit the angle beam examination shall be recorded and evaluated for impact on examination coverage. The straight beam examination procedure, or portion of the procedure, is required to be qualified in accordance with ASME Section V, Article 4 and may be performed using non-encoded techniques.

(5) All detected flaw indications from (4)(a) and (4)(b) above shall be considered planar flaws and compared to the preservice acceptance standards for volumetric examination in accordance with IWB-3000, IWC-3000 or IWD-3000. Preservice acceptance standards shall be applied. Analytical evaluation for acceptance of flaws in accordance with IWB-3600, IWC-3600 or IWD-3600 is permitted for flaws that exceed the applicable acceptance standards and are confirmed by surface or volumetric examination to be non-surface connected.

(6) Flaws exceeding the applicable acceptance standards and when analytical evaluation has not been performed for acceptance, shall be reduced to an acceptable size or removed and repaired, and the location of the repair shall be reexamined using the same ultrasonic examination procedure that detected the flaw.

(7) The ultrasonic examination shall be performed using encoded UT technology that produces an electronic record of the ultrasonic responses indexed to the probe position, permitting off-line analysis of images built from the combined data.

(a) Where component configuration does not allow for effective examination for transverse flaws, (e.g., pipe-to-valve, tapered weld transition, weld shrinkage, etc.) the use of non-encoded UT technology may be used for transverse flaws. The basis for the non-encoded examination shall be documented.

(8) A written ultrasonic examination procedure qualified by performance demonstration shall be used. The qualification shall be applicable to the scope of the procedure, e.g., flaw detection and/or sizing (length or through-wall height), encoded or non-encoded, single and/or dual side access, etc. The procedure shall:

(a) contain a statement of scope that specifically defines the limits of procedure applicability (e.g., minimum and maximum thickness, minimum and maximum diameter, scanning access);

(b) specify which parameters are considered essential variables, and a single value, a range of values or criteria for selecting each of the essential variables;

(c) list the examination equipment, including manufacturer and model or series;

(d) define the scanning requirements; such as beam angles, scan patterns, beam direction, maximum scan speed, extent of scanning, and access;

(e) contain a description of the calibration method (i.e., actions required to ensure that the sensitivity and accuracy of the signal amplitude and time outputs of the examination system, whether displayed, recorded, or automatically processed, are repeated from examination to examination);

(f) describe the method and criteria for discrimination of indications (e.g., geometric indications versus indications of flaws and surface versus subsurface indications); and

(g) describe the surface preparation requirements.

(9) Performance demonstration specimens shall conform to the following requirements:

(a) The specimens shall be fabricated from ferritic material with the same inside surface cladding process, if applicable, with the following exceptions:

(i) Demonstration with shielded metal arc weld (SMAW) single-wire cladding is transferable to multiple-wire or strip-clad processes;

(ii) Demonstration with multiple-wire or strip-clad process is considered equivalent but is not transferable to SMAW type cladding processes.

(b) The demonstration specimens shall contain a weld representative of the joint to be ultrasonically examined, including the same welding processes.

(c) The demonstration set shall include specimens not thicker than 0.1 in. (2.5 mm) more than the minimum thickness, nor thinner than 0.5 in. (13 mm) less than the maximum thickness for which the examination procedure is applicable. The demonstration set shall include the minimum, within ½ inch of the nominal pipe size (NPS), and maximum pipe diameters for which the examination procedure is applicable. If the procedure is applicable to outside diameter (O.D.) piping of 24 in. (600 mm) or larger, the specimen set must include at least one specimen 24 in. O.D. (600 mm) or larger but need not include the maximum diameter.

(d) The demonstration specimen scanning and weld surfaces shall be representative of the surfaces to be examined.

(e) The demonstration specimen set shall include geometric conditions that require discrimination from flaws (e.g., counterbore, weld root conditions, or weld crowns) and limited scanning surface conditions for single-side access, when applicable.

(f) The demonstration specimens shall include both planar and volumetric fabrication flaws (e.g., lack of fusion, crack, incomplete penetration, slag inclusions) representative of the welding process or processes of the welds to be examined. The flaws shall be distributed throughout the examination volume.

(g) Specimens shall be divided into flawed and unflawed grading units.

(i) Flawed grading units shall be the actual flaw length, plus a minimum of 0.25 in. (6 mm) on each end of the flaw. Unflawed grading units shall be at least 1 in. (25 mm).

(ii) The number of unflawed grading units shall be at least 1-1/2 times the number of flawed grading units.

(h) Demonstration specimen set flaw distribution shall be as follows:

(i) For thickness greater than 0.50 in. (13 mm); at least 20% of the flaws shall be distributed in the outer third of the specimen wall thickness, at least 20% of the flaws shall be distributed in the middle third of the specimen wall thickness and at least 40% of the flaws shall be distributed in the inner third of the specimen wall thickness. For thickness 0.50 in. (13mm) and less, at least 20% of the flaws shall be distributed in the outer half of the specimen wall thickness and at least 40% of the flaws shall be distributed in the inner half of the specimen wall thickness.

(ii) At least 30% of the flaws shall be classified as surface planar flaws in accordance with IWA-3310. At least 40% of the flaws shall be classified as subsurface planar flaws in accordance with IWA-3320.

(iii) At least 50% of the flaws shall be planar flaws, such as lack of fusion, incomplete penetration, or cracks. At least 20% of the flaws shall be volumetric flaws, such as slag inclusions.

(iv) The flaw through-wall heights shall be based on the applicable acceptance standards for volumetric examination in accordance with IWB-3400, IWC-3400 or IWD-3400. At least 30% of the flaws shall be classified as acceptable planar flaws, with the smallest flaws being at least 50% of the maximum allowable size based on the applicable a/I aspect ratio for the flaw. Additional smaller flaws may be included in the specimens to assist in establishing a detection threshold, but shall not be counted as a missed detection if not detected. At least 30% of the flaws shall be classified as unacceptable in accordance with the applicable acceptance standards. Welding fabrication flaws are typically confined to a height of a single weld pass. Flaw through-wall height distribution shall range from approximately one to four weld pass thicknesses, based on the welding process used.

(v) If applicable, at least two flaws, but no more than 30% of the flaws, shall be oriented perpendicular to the weld fusion line and the remaining flaws shall be circumferentially oriented.

(vi) For demonstration of single-side-access capabilities, at least 30% of the flaws shall be located on the far side of the weld centerline and at least 30% of the planar flaws shall be located on the near side of the weld centerline.

The remaining flaws shall be distributed on either side of the weld.

(10) Ultrasonic examination procedures shall be qualified by performance demonstration in accordance with the following requirements.

(a) The procedure shall be demonstrated using either a blind or a non-blind demonstration.

(b) The non-blind performance demonstration is used to assist in optimizing the examination procedure. When applying the non-blind performance demonstration process, personnel have access to limited knowledge of specimen flaw information during the demonstration process. The non-blind performance demonstration process consists of an initial demonstration without any flaw information, an assessment of the results and feedback on the performance provided to the qualifying candidate. After an assessment of the initial demonstration results, limited flaw information may be shared with the candidate as part of the feedback process to assist in enhancing the examination procedure to improve the procedure performance. In order to maintain the integrity of the specimens for blind personnel demonstrations, only generalities of the flaw information may be provided to the candidate. Procedure modifications or enhancements made to the procedure, based on the feedback process, shall be applied to all applicable specimens based on the scope of the changes.

(c) Objective evidence of a flaw's detection, length and through-wall height sizing, in accordance with the procedure requirements, shall be provided to the organization administering the performance demonstration.

(d) The procedure demonstration specimen set shall be representative of the procedure scope and limitations (e.g., thickness range, diameter range, material, access, surface condition).

(e) The demonstration set shall include specimens to represent the minimum and maximum diameter and thickness covered by the procedure. If the procedure spans a range of diameters and thicknesses, additional specimens shall be included in the set to demonstrate the effectiveness of the procedure throughout the entire range.

(f) The procedure demonstration specimen set shall include at least 30 flaws and shall meet the requirements of (9) above.

(g) Procedure performance demonstration acceptance criteria

(i) To be qualified for flaw detection, all flaws in the demonstration set that are not less than 50% of the maximum allowable size, based on the applicable *a/l* aspect ratio for the flaw, shall be detected. In addition, when performing blind procedure demonstrations, no more than 20% of the non-flawed grading units may contain a false call. Any non-flaw condition (e.g., geometry) reported as a flaw shall be considered a false call.

(ii) To be qualified for flaw length sizing, the root mean square (RMS) error of the flaw lengths estimated by ultrasonics, as compared with the true lengths, shall not exceed 0.25 in. (6 mm) for diameters of NPS 6.0 in. (DN150) and smaller , and 0.75 in. (18 mm) for diameters greater than NPS 6.0 in.

(DN150).

(iii) To be qualified for flaw through-wall height sizing, the RMS error of the flaw through-wall heights estimated by ultrasonics, as compared with the true through-wall heights, shall not exceed 0.125 in. (3 mm).

(iv) RMS error shall be calculated as follows:

$$RMS = \left[\frac{\sum_{n}^{i=1} \left(m_i - t_i \right)^2}{n} \right]^{1/2}$$

where:

m_i = measured flaw size
n = number of flaws measured
t_i = true flaw size

(h) Essential variables may be changed during successive personnel performance demonstrations. Each examiner need not demonstrate qualification over the entire range of every essential variable.

(11) Ultrasonic examination personnel shall be qualified in accordance with IWA- 2300. In addition, examination personnel shall demonstrate their capability to detect and size flaws by performance demonstration using the qualified procedure in accordance with the following requirements:

(a) The personnel performance demonstration shall be conducted in a blind fashion (flaw information is not provided).

(i) The demonstration specimen set shall contain at least 10 flaws and shall meet the flaw distribution requirements of (9)(h) above, with the exception of (9)(h)(v). When applicable, at least one flaw, but no more than 20% of the flaws, shall be oriented perpendicular to the weld fusion line and the remaining flaws shall be circumferentially oriented.

(b) Personnel performance demonstration acceptance criteria:

(i) To be qualified for flaw detection, personnel performance demonstration shall meet the requirements of the following table for both detection and false calls. Any non-flaw condition (e.g., geometry) reported as a flaw shall be considered a false call.

Performance Demonstration Detection Test Acceptance Criteria			
Detection Test Acceptance Criteria		**False Call Test Acceptance Criteria**	
No. of Flawed Grading Units	**Minimum Detection Criteria**	**No. of Unflawed Grading Units**	**Maximum Number of False Calls**
10	8	15	2
11	9	17	3
12	9	18	3
13	10	20	3
14	10	21	3
15	11	23	3
16	12	24	4
17	12	26	4
18	13	27	4
19	13	29	4
20	14	30	5
Note 1: Flaws $\geq$ 50% of the maximum allowable size, based on the applicable a/ℓ aspect ratio for the flaw.			

(ii) To be qualified for flaw length sizing, the RMS error of the flaw lengths estimated by ultrasonics, as compared with the true lengths, shall not exceed 0.25 in. (6 mm) for NPS 6.0 in. (DN150) and smaller, and 0.75 in. (18 mm) for diameters larger than NPS 6.0 in. (DN150).

(iii) To be qualified for flaw through-wall height sizing, the RMS error of the flaw through-wall heights estimated by ultrasonics, as compared with the true through-wall heights, shall not exceed 0.125 in. (3 mm).

(12) Documentation of the qualifications of procedures and personnel shall be maintained. Documentation shall include identification of personnel, NDE procedures, equipment and specimens used during qualification, and results of the performance demonstration.

(13) The pre-service examinations will be performed per ASME Section XI (Reference 4).

5.2 Basis for use

The overall basis for this proposed alternative is that encoded PAUT is equivalent or superior to RT for detecting and sizing critical (planar) flaws. In this regard, the basis for the proposed alternative was developed from numerous codes, code cases, associated industry experience, articles, and the results of RT and encoded PAUT examinations. The examination procedure and personnel performing examinations are qualified using representative piping conditions and flaws that demonstrate the ability to detect and size flaws that are both acceptable and unacceptable to the

defined acceptance standards. The demonstrated ability of the examination procedure and personnel to appropriately detect and size flaws provides an acceptable level of quality and safety alternative as allowed by 10 CFR 50.55a(z)(1).

6. Duration of Proposed Alternative:

This relief request will be applied for the fifth inservice inspection interval at the James A. FitzPatrick Nuclear Power Plant.

7. Precedence:

Letter from D. Wrona (U.S. Nuclear Regulatory Commission) to B. Hanson (Exelon Generation Company, LLC), Proposed Alternative to Use Encoded Phased Array Ultrasonic Examination Techniques (CAC Nos. MF8763-MF8782 and MF9395), dated June 5, 2017 (ML17150A091).

References:

1. ASME Section III Code Case N-659-2, "Use of Ultrasonic Examination in Lieu of Radiography for Weld Examination Section Ill, Divisions 1 and 3," dated June 9, 2008.

2. Pacific Northwest National Laboratory Report PNNL-19086, "Replacement of Radiography with Ultrasonics for the Nondestructive Inspection of Welds - Evaluation of Technical Gaps - An Interim Report," dated April 2010.

3. ASME B31.1, Case 168, "Use of Ultrasonic Examination in Lieu of Radiography for B31. 1 Application," dated June 1997.

4. ASME Section XI 2007 Edition with 2008 Addenda.

5. ASME Section III, Code Case N-818, "Use of Analytical Evaluation approach for Acceptance of Full Penetration Butt Welds in Lieu of Weld Repair," dated December 6, 2011.

6. ASME Code Case 2235-9, "Use of Ultrasonic Examination in Lieu of Radiography Section I, Section VIII, Divisions 1 and 2, and Section XII," dated October 11, 2005.

7. Journal of Pressure Vessel Technology, "Technical Basis for ASME Section VIII Code Case 2235 on Ultrasonic Examination of Welds in Lieu of Radiography;" Rana, Hedden, Cowfer and Boyce, Volume 123, dated August 2001.

8. ASME Code Case 2326, "Ultrasonic Examination in Lieu of Radiographic Examination for Welder Qualification Test Coupons Section IX," dated January 20, 2000.

9. ASME Code Case 2541, "Use of Manual Phased Array Ultrasonic Examination Section V," dated January 19, 2006.

10. ASME Code Case 2558, "Use of Manual Phased Array E-Scan Ultrasonic Examination per Article 4 Section V," dated December 30, 2006.

11. ASME Code Case 2599, "Use of Linear Phased Array E-Scan Ultrasonic Examination per Article 4 Section V," dated January 29, 2008.

12. ASME Code Case 2600, "Use of Linear Phased Array S-Scan Ultrasonic Examination Per Article 4 Section V," dated January 29, 2008.

13. ASME Code Case N-713, "Ultrasonic Examination in Lieu of Radiography Section XI, Division 1," dated November 10, 2008.

Request for Relief for Examination of ASME Section XI,
Examination Category B-G-1, Item Number B6.40, Threads in Flange

---

1. ASME Code Component(s) Affected:

All American Society of Mechanical Engineers (ASME), Section XI, Examination Category B-G-1, Item Number B6.40 threads in flange locations at the James A. FitzPatrick Nuclear Power Plant (JAFNPP).

2. Applicable Code Edition and Addenda:

PLANT	INTERVAL	EDITION	START	END
James A. FitzPatrick Nuclear Power Plant	Fifth	2007 Edition, through 2008 Addenda	August 1, 2017	June 15, 2027

3. Applicable Code Requirement:

The Reactor Pressure Vessel (RPV) threads in flange, Examination Category B-G-1, Item Number B6.40, are examined using a volumetric examination technique with 100% of the flange threaded stud holes examined every Inservice Inspection (ISI) interval. The examination area is the one-inch area around each RPV stud hole, as shown on Figure IWB-2500-12.

4. Reason for Request:

In accordance with 10 CFR 50.55a(z)(1), Exelon Generation Company, LLC is requesting a proposed alternative from the requirement to perform in-service ultrasonic examinations of Examination Category B-G-1, Item Number B6.40, Threads in Flange. Exelon has worked with the industry to evaluate eliminating the RPV threads in flange examination requirement. Licensees in the U.S. and internationally have worked with the Electric Power Research Institute (EPRI) to produce Technical Report No. 3002007626, "Nondestructive Evaluation: Reactor Pressure Vessel Threads in Flange Examination Requirements" (Reference 1), which provides the basis for elimination of the requirement. The report includes a survey of inspection results from over 168 units, a review of operating experience related to RPV flange/bolting, and a flaw tolerance evaluation. The conclusion from this evaluation is that the current requirements are not commensurate with the associated burden (worker exposure, personnel safety, radwaste, critical path time, and additional time at reduced water inventory) of the examination. The technical basis for this alternative is discussed in more detail below.

Potential Degradation Mechanisms

An evaluation of potential degradation mechanisms that could impact flange/threads reliability was performed as part of Reference 1. Potential types of degradation evaluated included pitting, intergranular attack, corrosion fatigue, stress corrosion cracking, crevice corrosion, velocity phenomena, dealloying corrosion, general corrosion, stress relaxation, creep, mechanical wear and

mechanical/thermal fatigue. Other than the potential for mechanical/thermal fatigue, there are no active degradation mechanisms identified for the threads in flange component.

The EPRI report notes a general conclusion from Reference 2, (which includes work supported by the U.S. Nuclear Regulatory Commission (NRC)) that when a component item has no active degradation mechanism present, and a preservice inspection has confirmed that the inspection volume is in good condition (i.e., no flaws / indications), then subsequent in-service inspections do not provide additional value going forward. As discussed in the Operating Experience review summary below, the RPV flange ligaments have received the required pre-service examinations and over 10,000 in-service inspections, with no relevant findings.

To address the potential for mechanical/thermal fatigue, Reference 1 documents a stress analysis and flaw tolerance evaluation of the flange thread area to assess mechanical/thermal fatigue potential. The evaluation consists of two parts. In the first part, a stress analysis is performed considering all applicable loads on the threads in flange component. In the second part, the stresses at the critical locations of the component are used in a fracture mechanics evaluation to determine the allowable flaw size for the component as well as how much time it will take for a postulated initial flaw to grow to the allowable flaw size using guidelines in the ASME Code, Section XI, IWB-3600. The Pressurized Water Reactor (PWR) design was selected because of its higher design pressure and temperature. A representative geometry for the finite element model used the largest PWR RPV diameter along with the largest bolts and the highest number of bolts. The larger and more numerous bolt configuration results in less flange material between bolt holes, whereas the larger RPV diameter results in higher pressure and thermal stresses.

Stress Analysis

A stress analysis was performed in Reference 1 to determine the stresses at critical regions of the thread in flange component as input to a flaw tolerance evaluation. Sixteen nuclear plant units (ten PWRs and six Boiling Water Reactors (BWRs)) were considered in the analysis. The evaluation was performed using a geometric configuration that bounds the sixteen units considered in this effort. The details of the RPV parameters for the JAFNPP as compared to the bounding values used in the evaluation are shown in Table 1. The geometry of the threads at JAFNPP as compared to that used in the analysis in Reference 1 is shown in Table 2. Dimensions of the analyzed geometry are shown in Figure 1.

For comparison purposes, the global force per flange stud can be estimated by the pressure force on the flange ($p*\pi*r^2$, where p is the design pressure and r is the vessel inside radius at the stud hole elevation) divided by the number of stud holes. From the parameters in Table 1, this results in a value of 1088 kips per stud for the configuration used in the analysis and 914 kips per stud for the JAFNPP configuration, indicating that the configuration used in the analysis bounds that at JAFNPP. As shown in Table 1, the preload used in the analysis is also bounding compared to that at JAFNPP. Also, as shown in Table 2, the diameter and pitch of the threads used in the analysis are comparable to those at JAFNPP. The thread depth used in the analysis is slightly smaller than that at JAFNPP, which results in higher stresses and is therefore bounding.

Table 1: Comparison of JAFNPP Plant Parameters to Bounding Values Used in Analysis

Plant	No. of Studs Currently Installed	Minimum No. of Studs Evaluated	Stud Nominal Diameter (inches)	RPV Inside Diameter at Stud Hole (inches)	Flange Thickness at Stud Hole (inches)	Design Pressure (psia)	Preload Stress (psi)
JAFNPP	52	52	6.00	218.75	13.5	1264.7	35,561
Bounding Values Used in Analysis	**54**	**NA**	**6.0**	**173**	**16**	**2500**	**42,338**

Table 2: RPV Flange Thread Geometry

Plant	Thread Specification	Nominal Bolt Hole Diameter in Flange (in.)	Pitch	Thread Depth (in.)
JAFNPP	7”-8 Special 2B	7.00	8	0.06765
Analysis Geometry		7.00	8	0.06500

The analytical model is shown in Figures 2 and 3. The loads considered in the analysis consisted of:

- A design pressure of 2500 psia at an operating temperature of 600°F was applied to all internal surface exposed to internal pressure.
- Bolt/stud preload – stress of 42,338 psi.
- Thermal stresses - The only significant transient affecting the bolting flange is heat-up/cooldown. This transient typically consists of a steady 100ºF/hour ramp up to the operating temperature, with a corresponding pressure ramp up to the operating pressure.

The ANSYS finite element analysis program was used to determine the stresses in the thread in flange component for the three loads described above.

Flaw Tolerance Evaluation

A flaw tolerance evaluation was performed using the results of the stress analysis to determine how long it would take an initial postulated flaw to reach the ASME Code, Section XI allowable flaw size. A linear elastic fracture mechanics evaluation consistent with ASME Code, Section XI, IWB-3600 was performed.

Stress intensity factors (K's) at four flaw depths of a 360° inside-surface-connected, partial-through-wall circumferential flaws are calculated using finite element analysis techniques with the model described above. The maximum stress intensity factor (K) values around the bolt hole circumference for each flaw depth (*a*) are extracted and used to perform the crack growth calculations. The circumferential flaw is modeled to start between the 10th and 11th flange threads from the top end of the flange because that is where the largest tensile axial stress occurs. The modeled flaw depth-to-wall thickness ratios (a/t) are 0.02, 0.29, 0.55, and 0.77, as measured in any direction from the stud

hole. This creates an ellipsoidal flaw shape around the circumference of the flange, as shown in Figure 4 for the flaw model with a/t = 0.77 a/t crack model. The crack tip mesh for the other flaw depths follows the same pattern. When preload is not being applied, the stud, stud threads, and flange threads are not modeled. The model is otherwise unchanged between load cases.

The maximum K results are summarized in Table 3 for the four crack depths. From Table 3, the maximum K occurs at operating conditions (preload + heatup + pressure). Because the crack tip varies in depth around the circumference, the maximum K from all locations at each crack size is conservatively used for the *K vs. a* profile.

Table 3: Maximum K vs. a/t

Load	K at Crack Depth (ksi√in)			
	0.02 a/t	0.29 a/t	0.55 a/t	0.77 a/t
Preload	11.2	17.4	15.5	13.9
Preload + Heatup + Pressure	13.0	19.8	16.1	16.3

The allowable stress intensity factor was determined based on the acceptance criteria in ASME Section XI, IWB-3610/Appendix A which states that:

$K_I < K_{Ic}/\sqrt{10} = 69.6$ ksi√in

where,
K_I = Allowable stress intensity factor (ksi√in)
K_{Ic} = Lower bound fracture toughness at operating temperature (220 ksi√in)

As can be seen from Table 3, the allowable stress intensity factor is not exceeded for all crack depths up to the deepest analyzed flaw of a/t = 0.77. Hence the allowable flaw depth of the 360° circumferential flaw is at least 77% of the thickness of the flange. The allowable flaw depth is assumed to be equal to the deepest modeled crack for the purposes of this analysis.

For the crack growth evaluation, an initial postulated flaw size of 0.2 in. (5.08 mm) is chosen consistent with the ASME Code, Section XI IWB-3500 flaw acceptance standards. The deepest flaw analyzed is a/t = 0.77 because of the inherent limits of the model. Two load cases are considered for fatigue crack growth: heat-up/cooldown and bolt preload. The heat-up/cooldown load case includes the stresses due to thermal and internal pressure loads and is conservatively assumed to occur 50 times per year. The bolt preload is assumed to be present and constant during the load cycling of the heat-up/cooldown load case. The bolt preload load case is conservatively assumed to occur five times per year, and these cycles do not include thermal or internal pressure. The resulting crack growth was determined to be negligible due to the small delta K and the relatively low number of cycles associated with the transients evaluated. Because the crack growth is insignificant, the allowable flaw size will not be reached and the integrity of the component is not challenged for at least 80 years (original 40-year design life plus additional 40 years of plant life extension).

An evaluation was also performed to determine the acceptability at preload condition. Table 4 below provides the RPV flange RT_{NDT} values and the bolt-up temperatures for the JAFNPP. As this table shows, the information was obtained from plant records as well as the NRC RVID2 database.

The values of ($T - RT_{NDT}$) for the RPV flanges for the JAFNPP are shown in Table 4. These were determined using the RT_{NDT} value from plant records. As can be seen from this table, the minimum

($T - RT_{NDT}$) is 30°F, corresponding to JAFNPP. From the equations in paragraph A-4200 of ASME Code Section XI, Appendix A, the corresponding value of K_{Ic} is 71 ksi√in. Using a structural factor of √10, the allowable K_{Ic} value is 22.5 ksi√in. This value is more than the maximum stress intensity factor (K_I) for the preload condition of 17.4 ksi√in shown in Table 3.

Table 4: RPV Flange RT_{NDT} and Bolt-Up Temperature for JAFNPP

Plant Name	Flange RT_{NDT} (°F)		Preload Temp (°F)	Minimum $T-RT_{NDT}$ (°F)
	From Plant Records	From NRC RVID2 Database		
JAFNPP	30	30	≥60	30

The stress analysis / flaw tolerance evaluation presented above shows that the thread in flange component at the units in the relief request is very flaw tolerant and can operate for 80 years without violating ASME Code, Section XI safety margins. This clearly demonstrates that the thread in flange examinations can be eliminated without affecting the safety of the RPV.

Operating Experience Review Summary

As discussed above, the results of the survey, which includes results from the JAFNPP, confirmed that the RPV threads in flange examination are adversely impacting outage activities (worker exposure, personnel safety, radwaste, critical path time, and additional time at reduced water inventory) while not identifying any service induced degradations. Specifically, for the U.S. fleet, a total of 94 units have responded to date and none of these units have identified any type of degradation. As can be seen in Table 5 below, the data is encompassing. The 94 units represent data from 33 BWRs and 61 PWRs. For the BWR units, a total 3,793 examinations were conducted and for the PWR units a total of 6,869 examinations were conducted, with no service-induced degradation identified. The response data includes information from all of the plant designs in operation in the U.S. and includes BWR-2, -3, -4, -5 and -6 designs. The PWR plants include the 2-loop, 3-loop and 4-loop designs and each of the PWR NSSS designs (i.e., Babcock & Wilcox, Combustion Engineering and Westinghouse).

Table 5: Summary of Survey Results – US Fleet

Plant Type	Number of Units	Number of Examinations	Number of Reportable Indications
BWR	33	3,793	0
PWR	61	6,869	0
Total	94	10,662	0

Related RPV Assessments

In addition to the examination history and flaw tolerance discussed above, Reference 1 discusses studies conducted in response to the issuance of the Anticipated Transient Without Scram (ATWS) Rule by the NRC. This rule was issued to require design changes to reduce expected ATWS frequency and consequences. Many studies have been conducted to understand the ATWS phenomena and key contributors to successful response to an ATWS event. In particular, the reactor

coolant system (RCS) and its individual components were reviewed to determine weak links. As an example, even though significant structural margin was identified in USNRC SECY-83-293 for PWRs, the ASME Service Level C pressure of 3200 psig was assumed to be an unacceptable plant condition. While a higher ASME service level might be defensible for major RCS components, other portions of the RCS could deform to the point of inoperability. Additionally, there was the concern that steam generator tubes might fail before other RCS components, with a resultant bypass of containment. The key take-away for these studies is that the RPV flange ligament was not identified as a weak link and other RCS components were significantly more limiting. Thus, there is substantial structural margin associated with the RPV flange.

In summary, Reference 1 identifies that the RPV threads in flange are performing with very high reliability based on operating and examination experience. This is due to the robust design and a relatively benign operating environment (e.g., the number and magnitude of transients is small, generally not in contact with primary water at plant operating temperatures/pressures, etc.). The robust design is manifested in that plant operation has been allowed at several plants even with a bolt/stud assumed to be out of service. As such, significant degradation of multiple bolts/threads would be needed prior to any RCS leakage.

5. Proposed Alternative and Basis for Use:

In lieu of the in-service requirements for a volumetric ultrasonic examination, Exelon proposes that the industry report (Reference 1) provides an acceptable technical basis for eliminating the requirement for this examination because the alternative maintains an acceptable level of quality and safety.

This report provides the basis for the elimination of the RPV threads in flange examination requirement (ASME Section XI Examination Category B-G-1, Item Number B6.40). This report was developed because evidence had suggested that there have been no occurrences of service-induced degradation and there are negative impacts on worker dose, personnel safety, radwaste, critical path time for these examinations and additional time at reduced water inventory.

Since there is reasonable assurance that the proposed alternative is an acceptable alternate approach to the performance of the ultrasonic examinations, Exelon requests authorization to use the proposed alternative pursuant to 10 CFR 50.55a(z)(1) on the basis that use of the alternative provides an acceptable level of quality and safety.

To protect against non-service related degradation, Exelon uses detailed procedures for the care and visual inspection of the RPV studs and the threads in flange each time the RPV closure head is removed. Care is taken to inspect the RPV threads for damage and to protect threads from damage when the studs are removed. Prior to reinstallation, the studs and stud holes are cleaned and lubricated. The studs are then replaced and tensioned into the RPV flange. This activity is performed each time the closure head is removed, and the procedure documents each step. These controlled maintenance activities provide further assurance that degradation is detected and mitigated prior to returning the reactor to service.

6. Duration of Proposed Alternative:

This relief request will be applied for the fifth inservice inspection interval at the JAFNPP.

7. Precedent:

The proposed alternative was authorized for the Exelon fleet prior to the acquisition of the James A. FitzPatrick Nuclear Power Plant as documented in the NRC Safety Evaluation (SE) dated June 26, 2017 (Reference 3).

8. References:

1. Nondestructive Evaluation: Reactor Pressure Vessel Threads in Flange Examination Requirements. EPRI, Palo Alto, CA: 2016. 3002007626. (ADAMS Accession No. ML16221A068).

2. American Society of Mechanical Engineers, Risk-Based Inspection: Development of Guidelines, Volume 2-Part 1 and Volume 2-Part 2, Light Water Reactor (LWR) Nuclear Power Plant Components. CRTD-Vols. 20-2 and 20-4, ASME Research Task Force on Risk-Based Inspection Guidelines, Washington, D.C., 1992 and 1998.

3. Letter from D. Wrona (U.S. Nuclear Regulatory Commission) to B. Hanson (Exelon Generation Company, LLC), Proposed Alternative to Eliminate Examination of Threads in Reactor Pressure Vessel Flange (CAC Nos. MF8712-MF8729 AND MF9548), dated June 26, 2017 (ML17170A013).

Figure 1
Modeled Dimensions

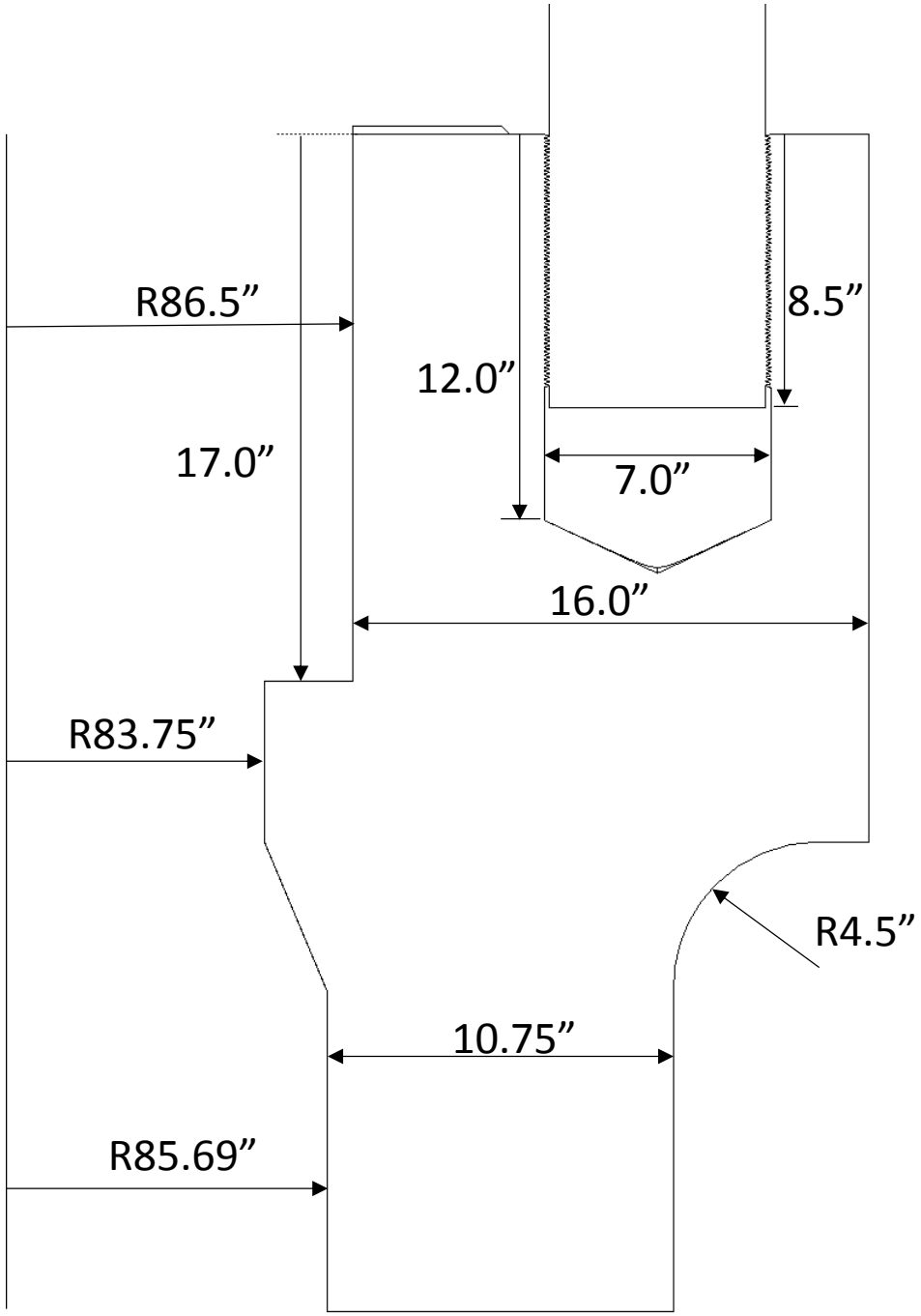

Figure 2
Finite Element Model Showing Bolt and Flange Connection

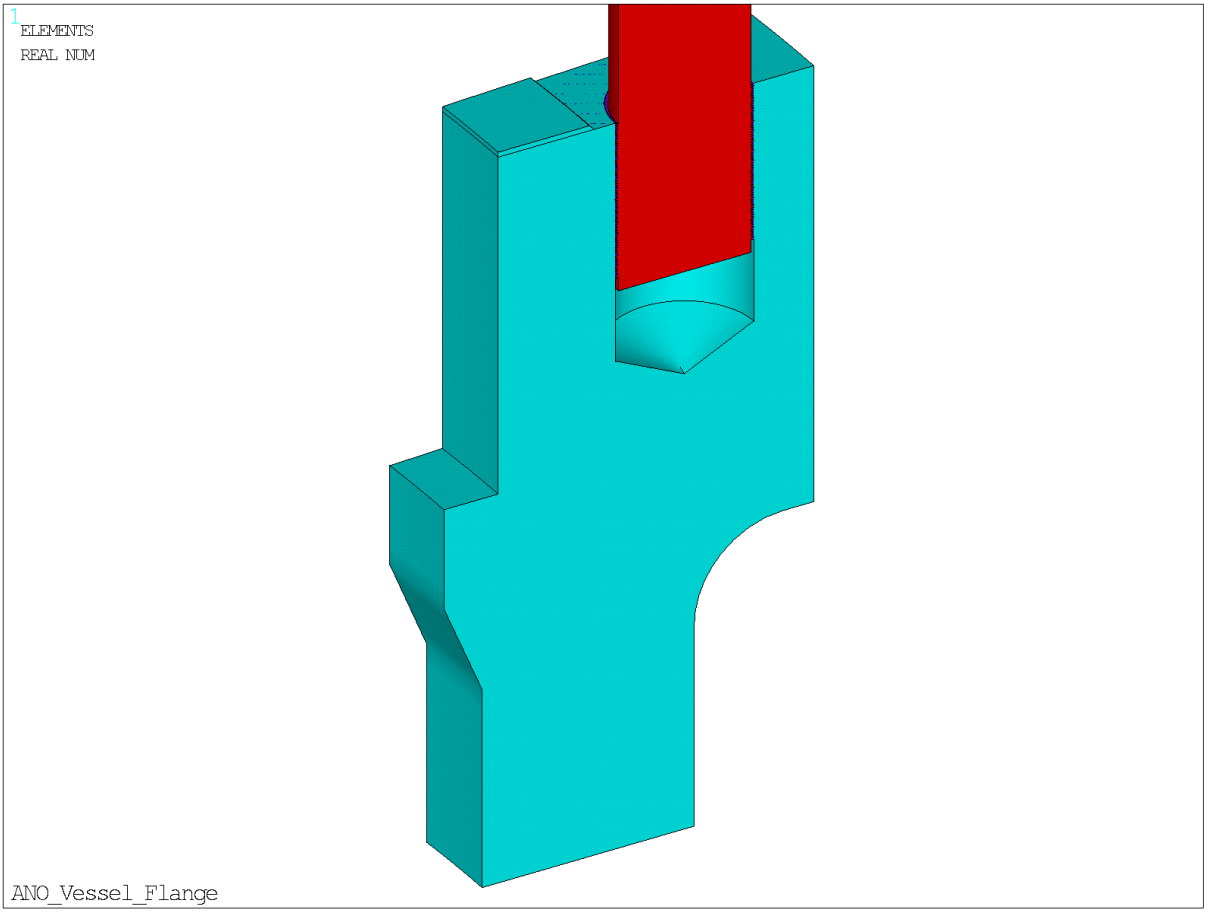

Figure 3
Finite Element Model Mesh with Detail at Thread Location

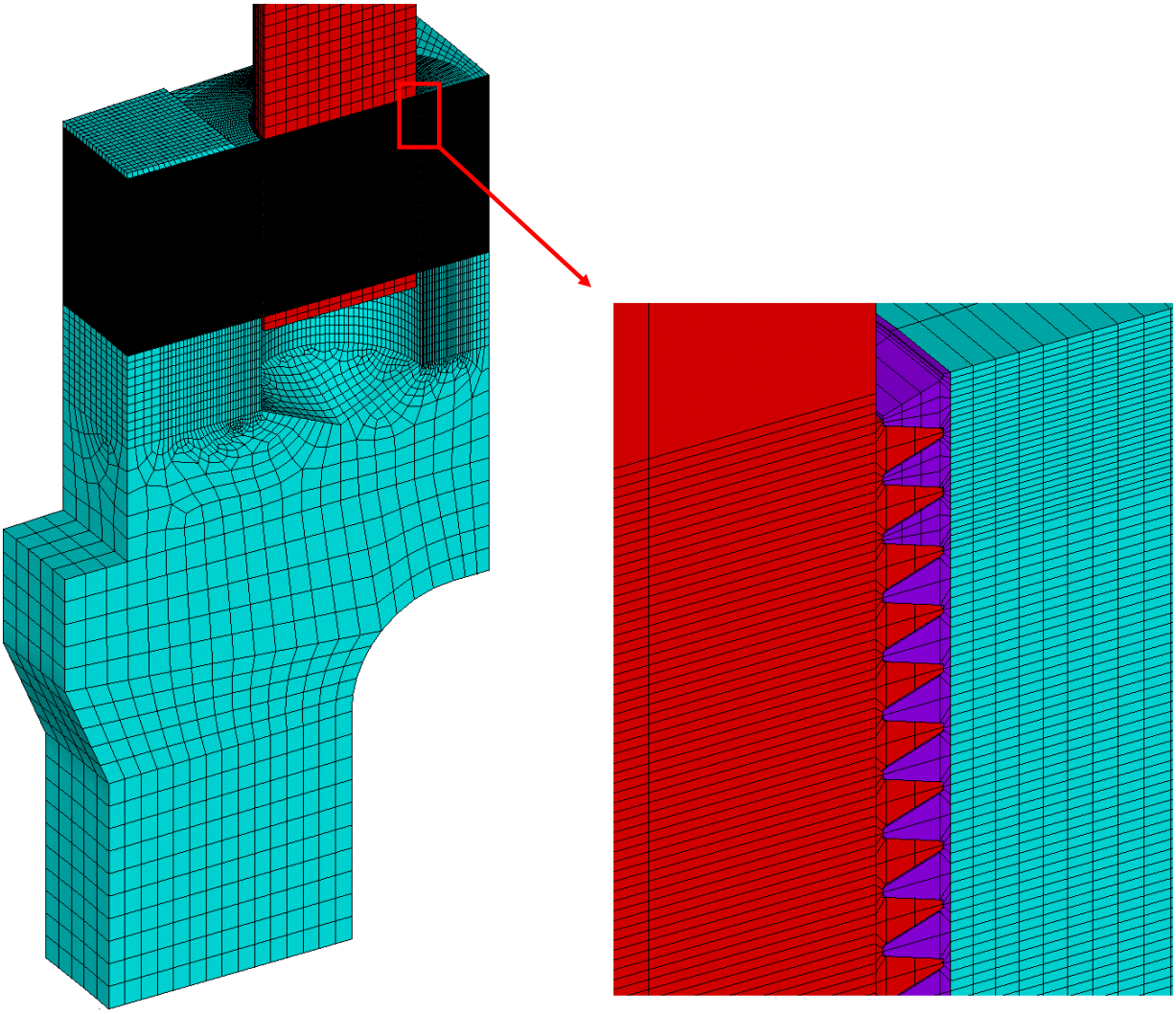

Figure 4
Cross Section of Circumferential Flaw with Crack Tip Elements Inserted After 10th Thread from Top of Flange