TABLE OF CONTENTS

Section	Title	Page	
8.0	ELECTRIC POWER	8.1-1	
8.1	INTRODUCTION	8.1-1	
8.1.1	REFERENCES	8.1-2	
8.2	OFFSITE POWER SYSTEM	8.2-1	
8.2.1	DESCRIPTION	8.2-1	
8.2.1.1	Unit Auxiliary, Emergency Auxiliary, and Safeguard Transformers	8.2-3	
8.2.1.2	Transmission System	8.2-4	
8.2.2	ANALYSIS	8.2-8	
8.2.2.1	Introduction	8.2-8	
8.2.2.2	Stability Study Results	8.2-8	
8.2.3	REFERENCES	8.2-11	
8.3	ONSITE POWER SYSTEMS	8.3-1	
8.3.1	A-C POWER SYSTEMS	8.3-1	
8.3.1.1	Description	8.3-1	
8.3.1.2	Analysis	8.3-19	
8.3.1.3	Conformance with Appropriate Quality Assurance Standards	8.3-20	
8.3.1.4	Independence of Redundant Systems	8.3-21	
8.3.1.5	Physical Identification of Safety-Related Equipment	8.3-25	
8.3.1.6	Electrical Penetration Areas	8.3-26	
8.3.2	D-C POWER SYSTEMS	8.3-27	
8.3.2.1	Description	8.3-27	
8.3.2.2	Analysis	8.3-36	
8.3.2.3	Physical Identification of Safety-Related Equipment	8.3-37	
8.3.3	FIRE PROTECTION FOR CABLE SYSTEMS	8.3-38	
8.3.3.1	Cable Derating, Cable Tray Fill, and Cable Construction	8.3-38	
8.3.3.2	Fire Detection and Protection Devices	8.3-42	
8.3.3.3	Fire Barriers and Separation Between Redundant Cable Trays	8.3-42	
8.3.3.4	Fire Stops	8.3-43	
8.3.4	SAFETY-RELATED CABLE	8.3-43	
8.3.5	REFERENCES	8.3-43	
8.4	STATION BLACKOUT	8.4-1	
8.4.1	STATION BLACKOUT DURATION	8.4-1	
8.4.2	COPING METHOD	8.4-2	
8.4.2.1	Class 1E Battery Capacity	8.4-2	
8.4.2.2	Condensate Inventory For Decay Heat Removal	8.4-2	00-01
8.4.2.3	Compressed Air	8.4-2	
8.4.2.4	Effects of Loss of Ventilation	8.4-2	
8.4.2.5	Containment Isolation	8.4-3	
8.4.2.6	Reactor Coolant Inventory	8.4-3	
8.4.3	REFERENCES	8.4-3	

TABLE OF CONTENTS (Continued)

Section	Title	Page
APPENDIX 8A	ADDITIONAL CABLE AND TRAY DESIGN CONSIDERATIONS	8A-1
APPENDIX 8B	CABLE RACEWAY FIRE DESIGN	8B-1
APPENDIX 8C	SUMMARY OF ANALYSIS OF SEPARATION BETWEEN TRAY FOR NON-CLASS 1E CIRCUITS AND TRAY FOR CLASS 1E CIRCUITS	8C-1
APPENDIX 8D	ANALYSIS OF THE ACCEPTABLE VOLTAGE RANGE TO BE APPLIED TO THE ESF SYSTEM	8D-1
APPENDIX 8E	ANALYSIS OF THE VOLTAGE DROPS ON THE ESF SYSTEM WHEN STARTING A 6900 OR 460 VOLT MOTOR WITH THE DIESEL GENERATOR AS THE SOURCE	8E-1
APPENDIX 8F	STARTING SEQUENCE OF ESF EQUIPMENT FOLLOWING AN ACCIDENT COINCIDENT WITH A DEGRADED VOLTAGE CONDITION	8F-1
APPENDIX 8G	ELECTRICAL CONTAINMENT PENETRATION CONDUCTOR OVERCURRENT PROTECTION DEVICES	8G-1

LIST OF TABLES

Table	Title	Page No.	
8.1-1	Transmission System Ties to Other Utilities	8.1-3	
8.1-2	Implementation of IEEE Standards	8.1-4	
8.1-3	List of Applicable Criteria	8.1-6	
8.2-1	Distances of Lines to First Major Substation	8.2-12	
8.2-2	Allowable Variation in Offsite System Voltage	8.2-13	
8.3-1	Major Electrical Equipment	8.3-45	
8.3-2	Symmetrical Interrupting Capacity for 480 Volt Unit Substation Cubicles	8.3-46	
8.3-3	Connected Automatic and Manual Loading and Unloading of the Diesel Generator	8.3-47	
8.3-3a	Diesel Generator Protective Devices	8.3-79	
8.3-3b	Engineered Safety Features Bus Indicators	8.3-80	
8.3-4	Identification of Safety-Related Cable Trays and Cables	8.3-81	
8.3-5	Sequence of Operation Following a Loss or Degraded Voltage Condition	8.3-82	
8D-1	Intentionally Deleted per RN 99-087. (Calculated Minimum Voltage Levels on Motors and Buses provided in referenced Calculation DC-820-001, Table 7.3.3)	8D-4	RN 99-087
8D-2	Calculated Motor Voltages for Maximum Offsite Voltage	8D-5	
8D-3	(Deleted per RN 99-007)	8D-6	RN 99-007
8E-1	Calculated Voltage Level of ESF System Buses and Motor Terminals with a Diesel Generator as a Source and Starting the 6900 Volt Charging/Safety Injection Pump Motor	8E-4	
8E-2	Calculated Voltage Level of ESF System Buses and Motor Terminals with a Diesel Generator as a Source and Starting the 460 Volt Service Water Booster Pump Motor	8E-5	
8F-1	Degraded Grid Voltage Coincident with LOCA	8F-2	
8F-2	Degraded Grid Voltage Coincident with MSLB	8F-4	

LIST OF FIGURES

Figure	Title
8.1-1	Transmission System Map
8.2-1	Site Transmission Map
8.2-2	230 kV Substation Layout
8.2-2a	Electrical - General Arrangement 230 kV Substation Arrangement
8.2-2b	Electrical - 230 kV Substation Arrangement Plan - Bus Sections 2 and 3
8.2-2c	Electrical - 230 kV Substation Arrangement Plan - Bus Sections 1 and 3
8.2-2d	Electrical - Overhead Line Arrangement - 230 kV and 115 kV Outdoor Transformer Area
8.2-3	Electrical - One Line and Relay Diagram - Balance of Plant Power System
8.2-4	Electrical - One Line and Relay Diagram - Engineered Safety Features Power System
8.2-5	Deleted
8.2-6	Deleted
8.2-7	Deleted
8.3-0	Outdoor Cable Bus Layout and Sections Emergency Auxiliary Transformer Area
8.3-0a	Outdoor Cable Bus Layout and Sections Unit Auxiliary Transformer Area
8.3-0b	Outdoor Cable Bus Layout and Sections Safeguard Transformer Area
8.3-0b.1	Outdoor Cable Bus Layout and Sections Safeguard Transformer Area
8.3-0c	Indoor Cable Bus Layout and Sections Plan View, Elevation 436'-0", Col. A to Col. D
8.3-0d	Indoor Cable Bus Layout and Sections Plan View, Elevation 436'-0", Col. d-f.1 and 8-11.1
8.3-0e	Indoor Cable Bus Layout and Sections Plan View, Elevation 412'-0", Col. 4 Through 8 and Col. A to B
8.3-0f	Indoor Cable Bus Layout and Sections Plan View, Elevation 412'-0", Col. 8 to 11.1 and Col. A to C
8.3-0g	Indoor Cable Bus Layout and Sections Plan View, Elevation 412'-0", Col. 8 to 11.1 and Col. C-f-1
8.3-0h	Diesel Generator Starting Control Logic Diagram
8.3-0i	Diesel Generator Shutdown Control Logic Diagram
8.3-0j	Diesel Generator Breaker Logic Diagram
8.3-0k	7.2 kV Bus 1DA Normal Incoming Breaker Logic Diagram
8.3-0l	7.2 kV Bus 1DA Emergency Incoming Breaker Logic Diagram
8.3-0m	Main Control Board Annunciator Station
8.3-0n	Diesel Generator Local Annunciator Stations
8.3-0o	Electrical - 7.2 kV Bus 1DA-1DB Undervoltage Relaying Logic Diagram

LIST OF FIGURES (Continued)

Figure	Title
8.3-1	Electrical One Line and Relay Diagram - Vital A-C System
8.3-2	Electrical One Line and Relay Diagram - Engineered Safety Features Vital A-C System
8.3-2a	Electrical - Duct Runs for Diesel Generator Circuits - Main Plant Area - West End
8.3-2aa	Electric One Line and Relay Diagram - Vital D-C System
8.3-2ab	One Line and Relay Diagram Engineered Safety Features Vital DC System
8.3-2b	Electrical - Duct Runs for Diesel Generator Circuits - Main Plant Area - East End
8.3-2c	Electrical - Duct Runs for Diesel Generator Circuits - Outdoor Area - East End
8.3-2d	Electrical - Duct Runs for Diesel Generator Circuits to Service Water Intake Structure
8.3-2e	Miscellaneous Outdoor Structures - Yard Duct Run - Turbine Building to Service Water Intake Structure
8.3-2f	Miscellaneous Outdoor Structures - Yard Duct Run -Electrical - Manhole MH-2
8.3-2g	Electrical Duct Banks - Control Complex, Intermediate Building and Turbine Building
8.3-3	Containment Penetration Separation
8.3-4	Electrical One Line and Relay Diagram - Balance of Plant Vital AC-DC System
8.3-4a	Balance of Plant - Vital AC and DC System
8.3-4b	Balance of Plant - Vital AC and DC System
8.3-5	230 kV Substation D-C Station Service Diagram
8.3-5a	230 kV Substation Unit 1 Relay House DC One Line Diagram and Panel Schedules
8.3-6	125 Volt D-C Main Distribution Panel
8.3-7	125 Volt D-C Main Distribution Panel
8.3-8	Electrical Reactor, Turbine and Generator Trip Diagram
8B-1	Electrical - Fire Barrier Details
8B-2	Electrical - Fire Barrier Details
8B-3	Electrical - Fire Barrier Details
8B-4	Electrical - Fire Barrier Details
8B-5	Electrical - Fire Barrier Details
8B-6	Electrical - Fire Barrier Details
8B-7	Electrical - Fire Barrier Details
8B-8	Electrical - Fire Barrier Details
8B-9	Electrical - Fire Barrier Details
8B-10	Electrical - Fire Barrier Details

RN 12-001

LIST OF FIGURES (Continued)

Figure	Title
8B-11	Electrical - Fire Barrier Details
8B-12	Electrical - Fire Barrier Details
8C-1	Case 041-C
8C-2	Case 102-A
8C-3	Case 073-A
8G-1	Containment Penetration Conductor Overcurrent Protection Devices
8G-2	Containment Penetration Conductor Overcurrent Protection Devices
8G-3	Containment Penetration Conductor Overcurrent Protection Devices
8G-4	Containment Penetration Conductor Overcurrent Protection Devices
8G-5	Containment Penetration Conductor Overcurrent Protection Devices
8G-6	Containment Penetration Conductor Overcurrent Protection Devices
8G-7	Containment Penetration Conductor Overcurrent Protection Devices
8G-8	Containment Penetration Conductor Overcurrent Protection Devices
8G-9	Containment Penetration Conductor Overcurrent Protection Devices
8G-10	Containment Penetration Conductor Overcurrent Protection Devices

LIST OF EFFECTIVE PAGES (LEP)

The following list delineates pages to Chapter 8 of the Virgil C. Summer Nuclear Station Final Safety Analysis Report which are current through October 2016. The latest changes to pages and figures are indicated below by Revision Number (RN) in the Amendment column along with the Revision Number and date for each page and figure included in the Final Safety Analysis Report.

Page/Fig.No.		Amend. No.	Date
Page	8-i	Reset	October 2016
	8-ii	Reset	October 2016
	8-iii	Reset	October 2016
	8-iv	Reset	October 2016
	8-v	Reset	October 2016
	8-vi	Reset	October 2016
	8-vii	Reset	October 2016
	8-viii	Reset	October 2016
	8-ix	Reset	October 2016
	8-x	Reset	October 2016
Page	8.1-1	RN07-001	April 2007
	8.1-2	99-01	June 1999
	8.1-3	RN12-026	April 2015
		RN12-028	April 2015
	8.1-4	RN99-002	February 2000
	8.1-5	RN99-002	February 2000
	8.1-6	RN99-002	February 2000
	8.1-7	RN99-002	February 2000
	8.1-8	00-01	December 2000
	8.1-9	00-01	December 2000
Fig.	8.1-1	98-01	April 1998
Page	8.2-1	RN06-042	April 2007
	8.2-2	RN13-015	September 2014
		RN12-001	February 2015
		RN14-013	April 2015
		RN14-019	April 2015
	8.2-3	RN06-042	April 2007
	8.2-4	RN12-026	April 2015
		RN12-028	April 2015
		RN12-039	April 2015
		RN14-019	April 2015
	8.2-5	RN13-015	September 2014
	8.2-6	RN12-026	April 2015
		RN12-039	April 2015
Page	8.2-7	RN12-026	April 2015
		RN12-028	April 2015
		RN14-019	April 2015
	8.2-8	RN12-039	April 2015
		RN14-019	April 2015
	8.2-9	RN10-030	November 2011
	8.2-10	RN10-030	November 2011
	8.2-11	RN10-030	November 2011
	8.2-12	RN12-017	April 2015
		RN12-026	April 2015
		RN12-028	April 2015
		RN12-039	April 2015
		RN14-019	April 2015
	8.2-13	RN13-008	September 2014
Fig.	8.2-1	RN12-029	September 2014
	8.2-2	RN11-036	April 2015
		RN12-017	April 2015
		RN12-026	April 2015
		RN12-028	April 2015
		RN12-039	April 2015
		RN13-003	April 2015
		RN13-026	April 2015
		RN14-011	April 2015
		RN14-013	April 2015
		RN14-019	April 2015
		RN15-015	May 2016
		RN16-005	May 2016
		RN14-031	October 2016
	8.2-2a	RN13-015	September 2014
		RN11-036	April 2015
		RN12-017	April 2015
		RN12-026	April 2015
		RN12-028	April 2015
		RN12-039	April 2015
		RN13-003	April 2015
		RN13-026	April 2015
		RN14-011	April 2015
		RN14-013	April 2015
		RN14-019	April 2015
		RN15-015	May 2016
		RN14-031	October 2016

Page/Fig.No.		Amend. No.	Date
Fig.	8.2-2b	RN11-036	April 2015
		RN12-017	April 2015
		RN12-026	April 2015
		RN12-028	April 2015
		RN12-039	April 2015
		RN13-003	April 2015
		RN13-026	April 2015
		RN14-011	April 2015
Fig.		RN14-013	April 2015
		RN14-019	April 2015
	8.2-2c	RN12-016	April 2015
		RN12-026	April 2015
		RN12-028	April 2015
		RN13-003	April 2015
		RN13-026	April 2015
		RN14-011	April 2015
		RN14-019	April 2015
		RN14-031	October 2016
	8.2-2d	RN09-014	April 2010
	8.2-3	RN13-002	April 2013
	8.2-4	RN12-007	October 2014
Page	8.3-1	00-01	December 2000
	8.3-2	00-01	December 2000
	8.3-3	RN07-001	April 2007
	8.3-4	00-01	December 2000
	8.3-5	RN98-065	January 2000
		RN99-007	November 1999
		RN99-087	February 2000
	8.3-6	00-01	December 2000
	8.3-7	00-01	December 2000
	8.3-8	00-01	December 2000
	8.3-9	RN98-061	January 2000
	8.3-10	00-01	December 2000
	8.3-11	RN01-113	December 2001
	8.3-12	00-01	December 2000
	8.3-13	00-01	December 2000
	8.3-14	RN01-113	December 2001
	8.3-15	00-01	December 2000
	8.3-16	00-01	December 2000
	8.3-17	00-01	December 2000
	8.3-18	00-01	December 2000
	8.3-19	00-01	December 2000
	8.3-20	00-01	December 2000
	8.3-21	00-01	December 2000
	8.3-22	RN03-018	June 2003
	8.3-23	00-01	December 2000
	8.3-24	00-01	December 2000
	8.3-25	00-01	December 2000
Page	8.3-26	RN96-041	September 1996
	8.3-27	RN12-001	February 2015
		RN14-013	April 2015
	8.3-28	RN12-001	February 2015
	8.3-29	00-01	December 2000
	8.3-30	00-01	December 2000
	8.3-31	00-01	December 2000
	8.3-32	00-01	December 2000
	8.3-33	00-01	December 2000
	8.3-34	00-01	December 2000
	8.3-35	00-01	December 2000
	8.3-36	00-01	December 2000
	8.3-37	00-01	December 2000
	8.3-38	00-01	December 2000
	8.3-39	00-01	December 2000
	8.3-40	00-01	December 2000
	8.3-41	00-01	December 2000
	8.3-42	00-01	December 2000
	8.3-43	00-01	December 2000
	8.3-44	00-01	December 2000
	8.3-45	RN10-018	November 2011
	8.3-46	02-01	May 2002
	8.3-47	02-01	May 2002
	8.3-48	RN12-006	June 2015
	8.3-49	RN12-006	June 2015
	8.3-50	RN15-025	January 2016
	8.3-51	RN10-014	November 2011
	8.3-52	RN10-014	November 2011
	8.3-53	02-01	May 2002
	8.3-54	02-01	May 2002
	8.3-55	02-01	May 2002

Page/Fig.No.		Amend. No.	Date
	8.3-56	RN12-006	June 2015
	8.3-57	02-01	May 2002
	8.3-58	RN15-025	January 2016
	8.3-59	RN10-014	November 2011
	8.3-60	RN10-014	November 2011
	8.3-61	RN10-014	November 2011
Page	8.3-62	02-01	May 2002
	8.3-63	02-01	May 2002
	8.3-64	02-01	May 2002
	8.3-65	RN12-006	June 2015
	8.3-66	RN15-025	January 2016
	8.3-67	02-01	May 2002
	8.3-68	02-01	May 2002
	8.3-69	02-01	May 2002
	8.3-70	02-01	May 2002
	8.3-71	02-01	May 2002
	8.3-72	RN12-006	June 2015
	8.3-73	02-01	May 2002
	8.3-74	RN15-025	January 2016
	8.3-75	02-01	May 2002
	8.3-76	02-01	May 2002
	8.3-77	02-01	May 2002
	8.3-78	02-01	May 2002
	8.3-79	RN98-027 R1	March 1999
	8.3-80	RN99-002	February 2000
	8.3-81	02-01	May 2002
	8.3-82	02-01	May 2002
Fig.	8.3-0	02-01	May 2002
	8.3-0a	02-01	May 2002
	8.3-0b	00-01	December 2000
	8.3-0b.1	02-01	May 2002
	8.3-0c	RN12-007	October 2014
	8.3-0d	RN12-007	October 2014
	8.3-0e	02-01	May 2002
	8.3-0f	02-01	May 2002
	8.3-0g	02-01	May 2002
	8.3-0h	02-01	May 2002
	8.3-0i	02-01	May 2002
	8.3-0j	02-01	May 2002
	8.3-0k	RN12-007	October 2014
	8.3-0l	RN12-007	October 2014
	8.3-0m	00-01	December 2000
Fig.	8.3-0n	98-01	April 1998
	8.3-0o	02-01	May 2002
	8.3-1	RN10-014	November 2011
	8.3-2	02-01	May 2002
	8.3-2a	RN06-039 RN07-026	February 2014 April 2008
	8.3-2aa	02-01 RN14-039	May 2002 May 2016
	8.3-2ab	02-01 RN14-039	May 2002 May 2016
	8.3-2b	RN07-026	April 2008
	8.3-2c	RN07-026	April 2008
	8.3-2d	RN06-039	February 2014
	8.3-2e	RN07-026	April 2008
	8.3-2f	RN07-026	April 2008
	8.3-2g	02-01	May 2002
	8.3-3	0	August 1984
	8.3-4	RN15-016	August 2015
	8.3-4a	RN11-015	November 2011
	8.3-4b	RN06-011	August 2007
	8.3-5	RN11-036 RN12-016 RN12-026 RN12-039 RN13-026 RN14-011 RN14-019 RN14-031	April 2015 April 2015 April 2015 April 2015 April 2015 April 2015 April 2015 October 2016

Page/Fig.No.		Amend. No.	Date
	8.3-5a	RN12-001 RN11-036 RN12-016 RN12-026 RN12-028 RN13-026 RN14-011 RN14-019 RN14-031	February 2015 April 2015 April 2015 April 2015 April 2015 April 2015 April 2015 April 2015 October 2016
	8.3-6	02-01	May 2002
	8.3-7	98-01	April 1998
	8.3-8	RN13-030	January 2014
Page	8.4-1	00-01	December 2000
	8.4-2	00-01	December 2000
	8.4-3	00-01	December 2000
Page	8A-1	00-01	December 2000
	8A-2	00-01	December 2000
Page	8A-3	02-01	May 2002
	8A-4	02-01	May 2002
	8B-1	00-01	December 2000
	8B-2	00-01	December 2000
	8B-3	00-01	December 2000
	8B-4	00-01	December 2000
Fig.	8B-1	0	August 1984
Fig.	8B-2	0	August 1984
	8B-3	0	August 1984
	8B-4	0	August 1984
	8B-5	0	August 1984
	8B-6	0	August 1984
	8B-7	0	August 1984
	8B-8	0	August 1984
	8B-9	0	August 1984
	8B-10	0	August 1984
	8B-11	0	August 1984
	8B-12	0	August 1984
Page	8C-1	00-01	December 2000
	8C-2	02-01	May 2002
	8C-3	00-01	December 2000
	8C-4	00-01	December 2000
	8C-5	00-01	December 2000
	8C-6	02-01	May 2002
	8C-7	00-01	December 2000
	8C-8	97-01	August 1997
	8C-9	97-01	August 1997
	8C-10	97-01	August 1997
	8C-11	97-01	August 1997
	8C-12	97-01	August 1997
	8C-13	97-01	August 1997
	8C-14	97-01	August 1997
	8C-15	97-01	August 1997
	8C-16	97-01	August 1997
	8C-17	97-01	August 1997
	8C-18	97-01	August 1997
Page	8C-19	97-01	August 1997
	8C-20	97-01	August 1997
	8C-21	97-01	August 1997
	8C-22	97-01	August 1997
	8C-23	97-01	August 1997
	8C-24	97-01	August 1997
	8C-25	97-01	August 1997
	8C-26	97-01	August 1997
	8C-27	97-01	August 1997
	8C-28	97-01	August 1997
	8C-29	97-01	August 1997
	8C-30	97-01	August 1997
	8C-31	97-01	August 1997
	8C-32	97-01	August 1997
	8C-33	97-01	August 1997
	8C-34	97-01	August 1997
	8C-35	97-01	August 1997
	8C-36	97-01	August 1997
	8C-37	97-01	August 1997
	8C-38	97-01	August 1997
	8C-39	97-01	August 1997

Page/Fig.No.		Amend. No.	Date	Page/Fig.No.	Amend. No.	Date
Fig.	8C-1	0	August 1984			
	8C-2	0	August 1984			
	8C-3	0	August 1984			
Page	8D-1	RN12-007	October 2014			
	8D-2	RN12-007	October 2014			
	8D-3	RN12-007	October 2014			
	8D-4	00-01	December 2000			
Page	8E-1	RN12-007	October 2014			
	8E-2	RN12-007	October 2014			
	8E-3	RN12-007	October 2014			
	8E-4	99-01	June 1999			
	8E-5	02-01	May 2002			
Page	8F-1	98-01	April 1998			
	8F-2	00-01	December 2000			
	8F-3	00-01	December 2000			
Page	8F-4	00-01	December 2000			
	8F-5	00-01	December 2000			
Page	8G-1	97-01	August 1997			
Fig.	8G-1	00-01	December 2000			
	8G-2	00-01	December 2000			
	8G-3	02-01	May 2002			
	8G-4	02-01	May 2002			
Fig.	8G-5	02-01	May 2002			
	8G-6	RN07-006	February 2013			
	8G-7	RN07-006	February 2013			
	8G-8	RN07-006	February 2013			
	8G-9	00-01	December 2000			
	8G-10	00-01	December 2000			

8.0 ELECTRIC POWER

8.1 INTRODUCTION

The Licensee's transmission system, along with points of interconnection with neighboring utilities, is shown in Figure 8.1-1. The Licensee is a member utility of the Virginia-Carolinas (VACAR) Subregion Reliability Agreement which is a part of the Southeastern Reliability Council. As a member of such a group, the Licensee can supply power to, or consume power from other members, as its system allows or demands. Transmission system ties to other utilities are as listed in Table 8.1-1. The specific interface between the transmission grid and the Virgil C. Summer Nuclear Station is discussed in Section 8.2.

The Virgil C. Summer Nuclear Station 230 kV switchyard has a single bus, single breaker arrangement, with three main bus sections. The center section is designated bus section 3, the east section designated bus section 1 and the west section designated bus section 2. A tap from bus section 2 provides a subsection of this bus with two bay positions for the Fairfield No. 1 and No. 2 lines. RN 02-013 RN 02-013

The Parr 115 kV engineered safety features (ESF) line terminates in a bay in bus section 3, crosses over bus section 3 with rigid bus construction, and continues to the Virgil C. Summer Nuclear Station.

There is an Alternate AC (AAC) source of power installed that is fed from an underground 13.8kV cable to the Parr Hydro Power Station (Separate from Parr Generating Complex). This line feeds a 13.2/7.2kV weather event hardened transformer located in the VCS Substation that is connected on the low side to a non-safeguards bus in the turbine building. This source of power was designed to the requirements of NUMARC 87-00 App B and can power one entire safeguards train of equipment. RN 07-001

The onsite power network consists of three non-Class 1E distribution networks and two independent, redundant Class 1E distribution networks. The voltage levels of each network are 7200 volts, 480 volts and 120 volt a-c and 125 volt d-c.

The main source of power for the non-Class 1E networks is the unit auxiliary transformer which is connected to the output of the main generator between the generator circuit breaker and the low voltage bushings of the main power transformer (see Figure 8.2-3).

The emergency auxiliary transformers provide an emergency source of power for the non-Class 1E distribution network.

The normal source of power for the two independent Class 1E distribution networks are the ESF transformers and a winding of the emergency auxiliary transformers. These two sources of power also serve as an alternate source of power to each other (see Figures 8.2-3 and 8.2-4).

Two diesel generators are provided, one for each of the Class 1E buses to serve as an emergency source of power. The safety-related loads their safety functions and power requirements, supplied by the two emergency diesel generators are listed in Table 8.3-3. The ESF battery buses, inverter buses and associated loads are shown by Figures 8.3-1 and 8.3-2.

The Class 1E power network provides an adequate and reliable source of electric power for safe reactor shutdown following any design basis event, including loss of offsite power and for all normal modes of station operation.

The Virgil C. Summer Nuclear Station electrical systems are designed to comply with the scope of IEEE-308 [1] as specified in Section 1 of IEEE-308. Onsite power systems are designed to satisfy the applicable criteria of Reference [1], as well as the criteria of Regulatory Guides 1.6 and 1.9 (see Appendix 3A).

Implementation of IEEE Standards and the extent to which any alternative approaches are used is itemized in Table 8.1-2. Applicable criteria, including: General Design Criteria, Appendix A to 10 CFR 50; Regulatory Guides; and Branch Technical Positions are listed in Table 8.1-3 with references to appropriate sections of this FSAR. Implementation of Regulatory Guides is discussed in Appendix 3A.

8.1.1 REFERENCES

1. Institute of Electrical and Electronics Engineers, "Criteria for Class 1E Electric Systems for Nuclear Power Generating Stations," IEEE-308-1971.

TABLE 8.1-1

TRANSMISSION SYSTEM TIES TO OTHER UTILITIES

South Carolina Electric and Gas Company	South Carolina Public Service Authority	Voltages(kV)	
Virgil C. Summer	Blythewood	230	
Virgil C. Summer	Winnsboro	230	RN 12-026 12-028
Arthur M. Williams	Charity	230	
Lyles	Eastover	115	
Lyles	Richland	115	
St. George	St. George	115	
Faber Place	College Park	115	
Faber Place	North Charleston	115	
Pepper Hill	Mateeba	230	
	Southeastern Power Administration		
CLM Tap	Clark Hill	115	
	Duke Energy		RN 12-026
Parr	Newport	230	
Parr	Bush River	230	
Georgia Pacific	Bush River (R)	115	
White Rock	Bush River (Y)	115	
	Progress Energy		RN 12-026
Wateree	Sumter	230	
Santee	Summerton	230	
Eastover	Shaw	115	
	Georgia Power Company		
Urquhart	Colnip	115 (N.O.)	
Urquhart	Colnit	115 (N.O.)	
Calhoun Falls	Hart	115 (N.O.)	
Hardeeville	McIntosh	115	
	Savannah River Services		RN 12-026
Savannah River Plant	Vogtle	230	

TABLE 8.1-2

IMPLEMENTATION OF IEEE STANDARDS

1. IEEE-279-1971, "Criteria for Protection Systems for Nuclear Power Generating Stations," (ANSI N42.7, 1972).

   Refer to Sections 7.1, 7.2, 7.3 and 7.6.

2. IEEE-308-1971, "Criteria for Class 1E Electric Systems for Nuclear Power Generating Stations."

   Onsite and offsite electrical power systems are designed to satisfy the applicable criteria of IEEE-308-1971.

   Refer to Sections 7.1.2.1.3, 7.6.1.2, 8.1, and 8.2.2.1. RN 99-002

3. IEEE-317-1972, "Electric Penetration Assemblies in Containment Structures for Nuclear Power Generating Stations."

   Electrical penetrations are designed and fabricated in accordance with the requirements of IEEE-317-1972.

   Refer to Sections 3.11.2.2.2 and 7.1.2.9 and the discussion of Regulatory Guide 1.63 in Appendix 3A.

   IEEE-323-1971, "General Guide for Qualifying Class 1E Electrical Equipment for Nuclear Power Generating Stations."

   Environmental Qualification (EQ) of Class 1E electrical equipment is addressed in Section 3.11, which identifies the commitment to NUREG-0588, Cat. II (IEEE-323-1971) for the original plant design. NUREG-0588, Cat. I (IEEE-323-1974), 10CFR50.49, and NRC RG 1.89 requirements have also been used as the bases for environmental qualification, as described in FSAR Section 3.11 and Appendix 3A, under NRC RG 1.89. RN 99-002

4. IEEE-336-1971, "Installation, Inspection and Testing of Nuclear Power Generating Station Protection Systems," (ANSI N45.2.4., 1972).

   Refer to Section 8.3.1.3 and Chapters 14.0 and 17.0.

5. IEEE-338-1971, "IEEE Standard Criteria for the Periodic Testing of Nuclear Power Generating Station Class 1E Power and Protection Systems."

   Refer to Section 7.1.2.11 and Chapter 14.0.

TABLE 8.1-2 (Cont.)

6. IEEE-344-1975, "IEEE Recommended Practices for Seismic Qualification of Class 1E Equipment for Nuclear Power Generating Stations." RN 99-002

   Class 1E electric equipment is tested and data is recorded to ensure that equipment satisfies design performance requirements during and following a safe shutdown earthquake (SSE). The qualification program meets the requirements of IEEE-344-1975 as discussed in Section 3.10. RN 99-002

7. IEEE-379-1972, "Guide for the Application of the Single Failure Criteria to Nuclear Power Generating Station Protection Systems," (ANSI N41.2).

   Refer to Section 7.1.2.7 and the discussion of Regulatory Guide 1.53 in Appendix 3A.

8. IEEE-384-1974, "Criteria for Separation of Class 1E Equipment and Circuits," (ANSI N41.14).

   Refer to Sections 7.1.2.2.1, 8.3.1.4 and 8.3.1.5 and the discussion of Regulatory Guide 1.75 in Appendix 3A.

9. IEEE-387-1972, "Criteria for Diesel Generator Units Applied As Standby Power Supplies for Nuclear Power Stations."

   IEEE-387-1972 is used as the basis for design criteria for the diesel generators and accessories. Included among the referenced standards in IEEE-387-1972, Section 4.1, are IEEE-308-1971 and IEEE-323-1971. Diesel generators are designed to satisfy these standards.

10. IEEE-450-1987, "Recommended Practice for Maintenance, Testing and Replacement of Large Stationary Type Power Plant and Substation Lead Storage Batteries." 99-01

    Refer to Section 8.3.2.2.2.

TABLE 8.1-3

LIST OF APPLICABLE CRITERIA

	Criteria	Title	Reference FSAR Section(s)	
1.	General Design Criteria (GDC), Appendix A to 10 CFR 50			
	GDC-1	Quality Standards and Records	3.1.2	
	GDC-2	Design Bases for Protection Against Natural Phenomena	3.1.2, 3.10, 3.11	
	GDC-3	Fire Protection	3.1.2, 7.1.2.2.3, 8.3.3.2	
	GDC-4	Environmental and Missile Design Bases	3.1.2	
	GDC-5	Sharing of Structures, Systems and Components	3.1.2	
	GDC-13	Instrumentation and Control	3.1.2, 7.3.1, 7.3.2	
	GDC-17	Electric Power Systems	3.1.2, 8.2.1, 8.2.2.2, 8.3.1.2.1, 8.3.2.2.1	RN 99-002
	GDC-18	Inspection and Testing of Electric Power Systems	3.1.2, 8.2.1, 8.3.1.2.1, 8.3.2.2.1	
	GDC-21	Protection System Reliability and Testability	3.1.2, 7.2.2.2, 7.3.1, 7.3.2	
	GDC-22	Protection System Independence	3.1.2, 7.2	
	GDC-33	Reactor Coolant Makeup	3.1.2, 8.3	
	GDC-34	Residual Heat Removal	3.1.2, 8.3	

TABLE 8.1-3 (Continued)

LIST OF APPLICABLE CRITERIA

	Criteria	Title	Reference FSAR Section(s)	
	GDC-35	Emergency Core Cooling	3.1.2, 8.3	
	GDC-41	Containment Atmosphere Cleanup	3.1.2, 8.3	
	GDC-44	Cooling Water	3.1.2, 8.3	
2.	Regulatory Guides (RG)			
	RG 1.6	Independence Between Redundant Standby (Onsite) Power Sources and Between Their Distribution Systems	App. 3A, 8.1, 8.3.1.2.1, 8.3.2.2.1	
	RG 1.9	Selection of Diesel Generator Set Capacity for Standby Power Supplies	App. 3A, 8.1, 8.3.1.1.2.4, 8.3.1.2.1	
	RG 1.22	Periodic Testing of Protective System Actuation Functions	App. 3A, 7.1.2.5, 7.3.2	
	RG-1.29	Seismic Design Classification	App. 3A	RN 99-002
	RG 1.30	Quality Assurance Requirements for the Installation, Inspection and Testing of Instrumentation and Electric Equipment	App. 3A, Chapter 17.0	
	RG 1.32	Use of IEEE Std. 308-1971, "Criteria for Class 1E Electric Systems for Nuclear Power Generating Stations"	App. 3A, 8.2.1, 8.3.1.2.1, 8.3.2.2.1	

TABLE 8.1-3 (Continued)

LIST OF APPLICABLE CRITERIA

Criteria	Title	Reference FSAR Section(s)
RG 1.41	Preoperational testing of redundant onsite Electric Power Systems to verify proper load group assignments.	App. 3A, 8.3.1.1.2.6, Chapter 14.0
RG 1.47	Bypassed and Inoperable Status Indication for Nuclear Power Plant Safety Systems	App. 3A, 7.1.2.6
RG 1.53	Application of the Single Failure Criterion to Nuclear Power Plant Protection Systems	App. 3A, 7.1.2.7
RG 1.63	Electric Penetration Assemblies in Containment Structures for Water-Cooled Nuclear Power Plants	App. 3A, 7.1.2.8, 8.3.1.1.4
RG 1.68	Preoperational and Initial Startup Test Programs for Water-Cooled Power Reactors	App. 3A, Chapter 14.0
RG 1.70	Standard Format and Content of Safety Analysis Reports for Nuclear Power Plants	App. 3A
RG 1.75	Physical Independence of Electric Systems	App. 3A, 7.1.2.2.1, 8.3.1.4.3
RG 1.81	Shared Emergency and Shutdown Electric Systems for multi-unit Nuclear Power Plants	App. 3A
RG 1.89	Qualification of Class IE Equipment for Nuclear Power Plants	App. 3A, 3.11, 8.3.1.2.2.1
RG 1.93	Availability of Electric Power Sources	App. 3A

TABLE 8.1-3 (Continued)

LIST OF APPLICABLE CRITERIA

	Criteria	Title	Reference FSAR Section(s)
3.	Branch Technical Positions (ETCSB)		
	ETCSB1	Backfitting of the Protection and Emergency Power Systems of Nuclear Reactors	Chapters 7.0 and 8.0
	ETCSB2	Diesel-Generator Reliability Qualification Testing	8.3.1.1.6
	ETCSB6	Capacity Test Requirements of Station Batteries-Technical Specifications	8.3.2.2.2
	ETCSB8	Use of Diesel-Generator Sets for Peaking	8.3.1.1.2.4
	ETCSB10	Electrical and Mechanical Equipment Seismic Qualification Program	3.10, 8.3.2.2.1
	ETCSB11	Stability of Offsite Power Systems`	8.2.2.2
	ETCSB17	Diesel Generator Protective Trip Circuit Bypasses	8.3.1.1.2.8, Table 8.3-3a
	ETCSB21	Guidance for Applicable of Regulatory Guide 1.47	App. 3A (discussion of RG 1.47), 7.1.2.6
	ETCSB27	Design Criteria for Thermal Overload Protection for Motors of Motor-Operated Valves	App. 3A (discussion of RG 1.106), 8.3.1.1.4

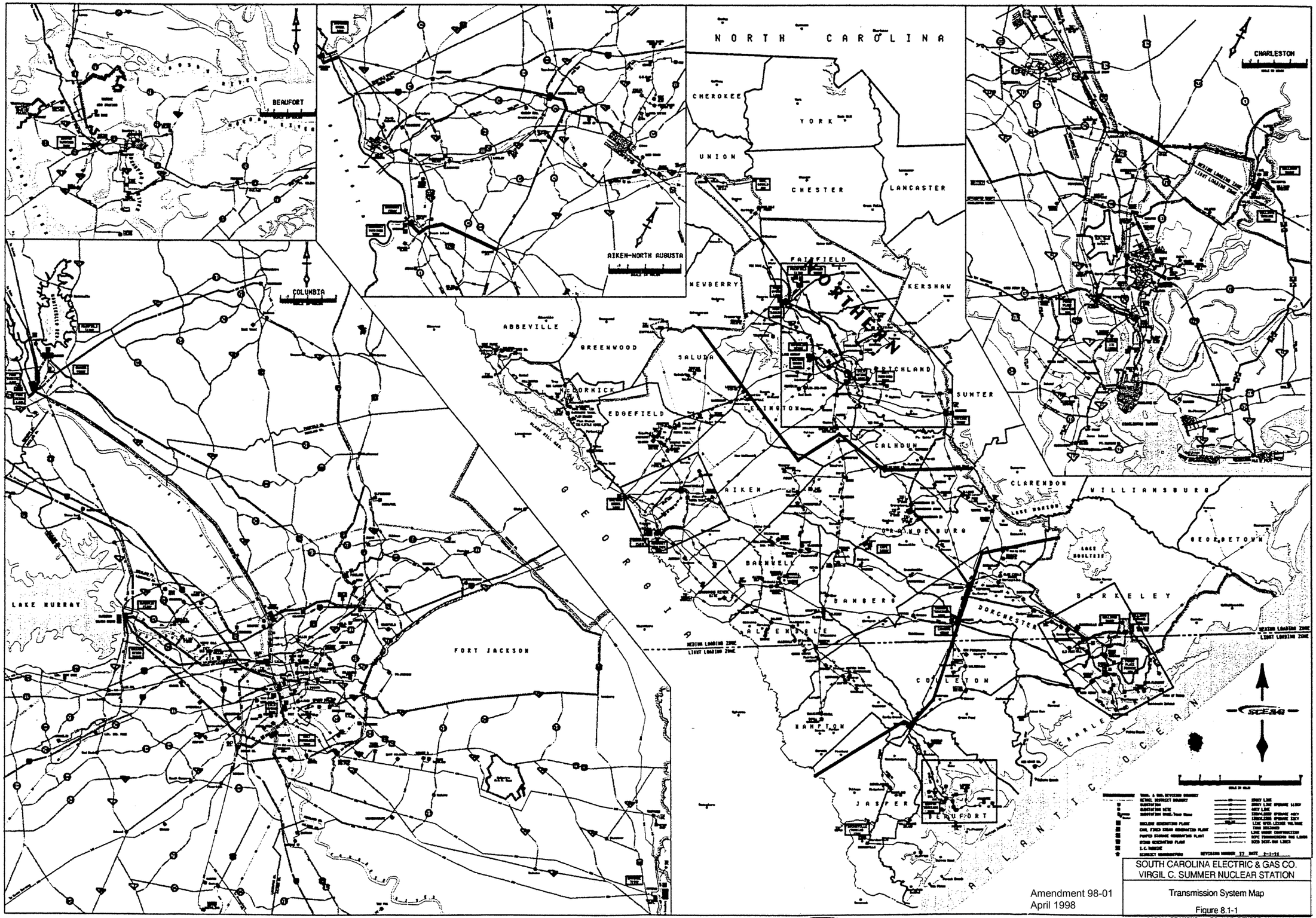

Amendment 98-01 April 1998

8.2 OFFSITE POWER SYSTEM

8.2.1 DESCRIPTION

The SCE&G transmission system supplies offsite a-c power for operating the engineered safety features (ESF) buses as well as for startup and shutdown of the station. Two (2) separate sources of offsite power are provided for the Class 1E electric system, which is in compliance with General Design Criterion 17 and Regulatory Guide 1.32 (see Appendix 3A). One (1) source is the SCE&G transmission grid terminating at the Virgil C. Summer Nuclear Station 230 kV switchyard bus, which feeds the plant through a step down transformer. The second source is from the existing Parr Generating Complex over a 115 kV transmission line (see Figure 8.2-1). This source is connected to the plant through onsite step down transformers and a separate regulating transformer. These 2 sources have sufficient separation and isolation so that loss of the Virgil C. Summer Nuclear Station with the Fairfield Hydro Units off line will not degrade either of the sources below their acceptable voltage limit. Thus, loss of the station output, in conjunction with an accident, will not result in a degraded voltage condition on either source. Likewise, loss of a line or generation on the 115 kV network will not cause a degraded condition on the Emergency Auxiliary Transformer which is fed power from the 230 kV bus. Also, no single event such as an insulator or bushing failure, transformer failure, transmission line tower failure, line breakage, or similar event can cause simultaneous disruption of both sources. The offsite power system is not designed to withstand tornadoes, exceptionally severe hurricanes or ice storms. However, the circuit breakers for isolation of the 2 separate onsite power systems from the offsite power system are located within 2 separate, missile protected rooms. Therefore, any failure of the offsite power system, including the bus duct system between the offsite power system and the ESF buses, is isolated from the ESF buses before the emergency diesel generators are started (see Figure 8.2-2).

RN 02-013

The allowable system voltage fluctuations for each of the 2 preferred offsite sources are defined in Table 8.2-2. As noted in the table, the allowable voltage range is dependent on generating unit availability, the number of buses connected to the source, and on the configuration of the transformers for the 115 kV line. The SCE&G dispatchers are provided with instructions to make every effort to maintain the system voltage fluctuations within these allowable ranges. The instructions require maintenance of the voltage limits during shutdown, as well as during operation, of Virgil C. Summer Nuclear Station. The transmission system voltage drop due to loss of the Virgil C. Summer Nuclear Station is included within the allowable voltage ranges during plant operation with the unit online. The transmission system voltage drop is not included within the allowable voltage ranges during plant operation with the unit offline because the unit is not generating. A direct communications link is provided between the SCE&G Dispatch Office in Columbia, SC, and all SCE&G generating plants. Through this communications link, the plant operators receive the instructions from the dispatch office for setting generator kilowatt, kilovar output, voltage level, and for controlling the VAR output on the Fairfield units when they are used for pumping.

98-01

RN 99-002

RN 06-042

The plant operators are provided with indicators for the engineered safety features (ESF) bus network as discussed in Section 8.3.1.2.1. Also, voltmeters, ammeters, kilowatt meters, kilovar meters, and frequency meters are provided for the main generator bus. If generator output differs from that specified by the dispatch office, the operator notifies the dispatch office and receives a new set of operating levels for the generator.

Control and indication are provided locally at the substation relay house and/or the Unit 1 relay house and remotely in the system dispatcher's office for each of the incoming 230 kV transmission line circuit breakers and the 230 kV bus tie circuit breakers. Circuit breaker control consists of tripping and closing capability. Indication includes circuit breaker status (open or closed) and the amount and direction of the power being transmitted over each transmission line. Control power for the substation relay house is supplied from a 125 VDC battery, with a backup feed from the plant non-1E. Control power for the Unit 1 relay house is supplied from two (2) 125 volt d-c batteries, each sized to serve as back-up to the other.

RN 12-001
RN 02-013
RN 12-001 14-013

The 230 kV buses are protected by single phase bus differential voltage relays. Each 230 kV line and the 115 kV line is protected by primary and backup relaying. Each 230 kV line terminal has relays that provide breaker failure protection that trips the appropriate bus lockout relay when the breaker fails to trip. Each line relays also provide a multi-shot, static reclosing function that is active in some breakers.

RN 01-043 02-013 14-019

The 230 kV circuit breakers associated with the plant main transformer and emergency auxiliary transformers, as well as the circuit switches associated with the ESF transformers, are controlled from, and provide indication in, the control room. Also, the 230 kV circuit breakers can be tripped at the circuit breaker control panels mounted on the circuit breaker structures.

RN 02-013

Manually operated disconnect switches are provided for the 230 kV circuit breakers to isolate each from the bus and associated lines. These manual disconnects permit testing and maintenance of each circuit breaker on an individual basis while allowing the 230 kV substation to remain energized, which satisfies General Design Criterion 18. Testing and maintenance are performed periodically in accordance with a SCE&G program.

As shown by Figure 8.2-2, the 115 kV line terminates in a rigid bus construction for the crossover of the 230 kV middle bus section. The 115 kV bus has no connection to the 230 kV bus. Therefore, any problems associated with the 230 kV bus do not affect the 115 kV bus. The rigid bus construction offers high reliability by eliminating the possibility of line dropping at this crossover point.

RN 13-015

The preferred power source transformers, which are the emergency auxiliary transformers and the combination of the safeguard transformers and the voltage regulator are located out of doors and are physically separated from each other. Lightning arrestors are used where applicable for lightning protection. The transformers are protected by automatic water spray systems to extinguish oil fires quickly, thus preventing spreading. The transformer area is provided with a gravel filled sump pit to contain transformer oil should a rupture occur.

Power from both the emergency auxiliary transformer and from the combination of the 2 safeguard transformers and the voltage regulator is brought into the plant by independent 7200 volt buses. These buses are physically separated and independently supported throughout their length to the 2 separated, missile protected rooms which contain the separate Class 1E electric system 7200 volt buses, thus maintaining redundancy.

8.2.1.1 Unit Auxiliary, Emergency Auxiliary, and Safeguards Transformers

Normal station service power for non-Class 1E equipment, which includes that required during normal operation, startup, shutdown, and following shutdown, is provided from the unit auxiliary transformer. The primary side of the unit auxiliary transformer is connected to the generator isolated phase bus duct at a point between the generator circuit breaker and the low voltage connections to the main step up transformer as shown by Figure 8.2-3.

The unit auxiliary transformer is rated 22 kV - 7200 volts. The three 7200 volt secondaries are used to feed 3 independent 7200 volt non-Class 1E auxiliary buses. The 2 ESF system 7200 volt buses are fed independently from other sources.

Two (2) emergency auxiliary transformers are provided. The primary sides of these 2 transformers are connected in parallel to the 230 kV substation bus. The 2 secondary windings on each bank are rated 7200 volts. Three (3) of the 4 windings are used as an emergency power source for the three 7200 volt non-Class 1E auxiliary system buses. The fourth winding is a preferred offsite power source for either or both of the ESF system power trains (see Figures 8.2-3 and 8.2-4). Normally this winding is used to supply the 7200 volt ESF bus 1DB.

The primary windings of the 2 safeguard transformers, XTF-4 and 5, are connected in parallel to the 115 kV line. These 2 transformers, in combination with the regulating transformer, XTF-6, are the second preferred offsite power source for either or both of the ESF system power trains. Normally, safeguard transformer 4 is used in combination with the voltage regulator to supply 7200 volt ESF system bus 1DA. If the voltage regulator is out of service, the 2 safeguard transformers can be used in parallel to supply either or both of the 7200 volt ESF system buses; or 1 of the 2 transformers can be used to supply either or both of the buses (see Figure 8.2-4).

RN
06-042

Connected to the same intermediate bus (1DX) as transformers XTF-4, 5 and 6 is the VC Summer Alternate AC Source (AAC). The AAC source is fed from an underground 13.8kV cable to the Parr Hydro Power Station main generator bus via Parr BKR 13123. This line feeds a 13.2/7.2kV transformer located in the VCS Substation that feeds into the 1DX bus. All cabling and lightning protection equipment associated with this feed is weather protected. The installed cable is oversized for the potential load attached to it such that the 105ºC normal rating of the cable cannot be reached with the maximum loading of a single ESF bus (750 mcm AL cable with most limiting rating of 490 amps will be loaded to a running maximum of 245 amps, 5.9MW load equivalent or 50% cable rating). Direct monitoring of underground cable temperature is not required as long as total ESF bus loading does not exceed 5.9MW (5MW calculated load with 15% conservatism). The loading of the AAC source onto either one of two ESF buses is to be done manually (sequencer Out-of-Service). RN 07-001

Each of the 2 principle 7200 volt ESF buses is provided with a manually initiated transfer scheme to shift the bus power supply between the 2 preferred offsite power sources.

8.2.1.2 Transmission System

The network interconnections between the Virgil C. Summer Nuclear Station and the SCE&G transmission system consist of eight 230 kV transmission lines which approach the site from 3 directions. The 230 kV transmission lines interconnect the Virgil C. Summer Nuclear Station with the major sources of generation on the SCE&G system through major transmission grid substations as shown by Figures 8.1-1 and 8.2-1. The lines are designed to meet or exceed NESC (ANSI-C2) 1973 edition, medium loading, grade B construction requirements. RN 12-039 14-019

In addition, one 230 kV transmission lines interconnect the Virgil C. Summer Nuclear Station with the South Carolina Public Service Authority (SCPSA) system. RN 12-026 12-028

In addition to the aforementioned lines, 2 transmission lines extend directly from the Virgil C. Summer Nuclear Station 230 kV bus section 2 to the SCE&G Fairfield Pumped Storage Facility. RN 01-043 02-013

One (1) 115 kV transmission line extends from the Virgil C. Summer Nuclear Station to the SCE&G Parr Generating Complex. The Parr 115kV substation and associated Transmission Grid connections serve as one of the preferred power sources for the ESF buses at the Virgil C. Summer Nuclear Station. Within the Parr 115kV substation are four gas-fired combustion turbines that with the substation form the Parr Generating Complex. The Parr Hydro station is connected to the Parr 115kV substation via a 115/13.2kV tap changing transformer, but is not considered part of the Parr Generating Complex even with its close proximity. RN 02-013 RN 07-001

The 115 kV transmission line has no direct ties to the Parr Generating Complex 230 kV switchyard. This switchyard does have a tie from the Virgil C. Summer Nuclear Station 230 kV switchyard bus. The Parr Generating Complex 115 kV switchyard bus receives power from the Parr Generating Complex and from a 115 kV tie line to the Denny Terrace substation. With this arrangement, an outage at the Virgil C. Summer Nuclear Station 230 kV switchyard does not have a direct effect on the 115 kV ESF transmission line. RN 02-013

Figures 8.2-2 and 8.2-2a through 8.2-2d indicate the physical relationship between transmission lines entering the switchyard, between the switchyard and the plant and within the switchyard. All 230 kV transmission tie lines to other major interconnection points converge on the switchyard. All transmission line structures have a minimum of 60 feet center to center as they approach the switchyard. RN 02-013

Each transmission line has adequate capacity for the supply of the preferred power source emergency auxiliary transformer. The 230 kV transmission lines, 230 kV circuit breakers and 230 kV buses in the switchyard are designed to withstand and interrupt the maximum fault level at the bus. RN 02-013

Details of the construction of each transmission line are as follows:

1. Parr-Summer Safeguard 115 kV Line

   This line is about 2.6 miles long. Wood, H-frame construction and steel monopole structures are used. The line extends from the Parr 115 kV substation to the vicinity of the Parr 230 kV substation and then to Virgil C. Summer Nuclear Station. An approximately 600 foot segment of this line is routed from above ground to an underground duct bank and then returns to above ground routing. This underground segment eliminates the crossing of the 115 kV line over 230kV transmission lines near the Parr Substation. RN 02-013 13-015

   There is a switchable tie to the Parr-Winnsboro No. 1 line. It also crosses over the Norfolk-Southern Railroad at Parr and over a railroad spur at Virgil C. Summer Nuclear Station. The last 2 line structures at Virgil C. Summer Nuclear Station are steel monopole structures which raise this line above a VCS1-VCS2 tie. There are no structure or circuit conflicts since a failure of the towers would not result in loss of both sources of offsite power, as the VCS1-VCS2 tie breaker would trip leaving the other 230 kV lines intact. RN 02-013 RN 13-015

2. Summer-Edenwood Line, 230 kV

This line is about 33.02 miles long. At Virgil C. Summer Nuclear Station it is on 3 double circuit, 230 kV steel towers. The end of this line ties to the Edenwood 230 kV line about 1.2 miles from Parr. The line crosses over the Parr-Denny Terrace 230 kV line and the double circuit Parr-Denny Terrace 115 kV line. The line is of wood H-frame construction on a right-of-way with no other lines. The line continues past McMeekin Station on to Edenwood Substation. RN 02-013

3. Deleted RN 12-039

4. Summer-Pineland Line, 230 kV

This line is on 3 double circuit, steel towers with the Summer-Denny Terrace line. These lines then are on wood H-frame structures designed for double circuits. The structures are in the center of a 240 foot wide right-of-way which extends for about 17.24 miles. In this area, the line parallels the SCPSA Summer-Blythewood 230 kV H-frame. There are structure conflicts in this area. For the next 1.62 miles, this line is on single circuit wood H-frame on a common right-of-way with the Summer-Denny Terrace line. There are no structural conflicts in this area. For the next 5.0 miles, this line is on single circuit, wood H-frame on its own right-of-way. For about the final 0.54 mile, this line is on double circuit, improved appearance, steel poles at Pineland substation. This line crosses over several transmission lines but none cross over it. Total length is about 24.4 miles. RN 02-013 RN 02-013 RN 09-024 RN 02-013 98-01

5. Summer-Denny Terrace Line, 230 kV RN 02-013

This line is attached to the same structures as the Summer-Pineland line at the Virgil C. Summer Nuclear Station and for the first 17.24 miles. From this point the Summer-Denny Terrace line is attached to single circuit H-frame structures and shares a common 240 foot right-of-way with the Summer-Pineland line for 1.62 miles. It is then on its own right-of-way for 5.91 miles. The Summer-Denny Terrace line then parallels the Denny Terrace-Rader double circuit 115 kV lines (crossing over them twice) to Denny Terrace, a distance of about 1.48 miles. Total length is 26.25 miles. RN 02-013

6. Deleted RN 12-026 12-039

7. South Carolina Public Service Authority, VCS1-Blythewood Line, 230 kV

RN 14-019

This line is installed on multi-pole single circuit (MPSC) structures with 1272 ACSR single conductor and is operated and owned by SCPSA. This line is located on variable width right-of-way (R/W) that extends for 20 miles from the VCS1 to SCPSA's Blythewood substation. This line is on common R/W with SCPSA's VCS1-Winnsboro 230 kV line and SCE&G's VCS1-Killian, Denny Terrace and Pineland 230 kV lines for 1.0 mile to a point referred to as Winnsboro Junction. From Winnsboro Junction, the line extends 2.8 miles to SCPSA Pomaria-Winnsboro 69 kV line. From the Pomaria-Winnsboro 69 kV line, the line extends 13.4 miles on common R/W with SCE&G's VCS1-Denny Terrace and Pineland 230 kV lines. From this point, the line veers off and extends 2.9 miles to SCPSA's Blythewood substation.

RN 02-013 14-019

8. VCS2 Bus 2 Tie Line, 230 kV

This line connects V. C. Summer Unit 1, Bus 2 to V. C. Summer Unit 2 switchyard. It parallels the Duke-Newport line for approximately 0.63 mile. Total length is 0.87 mile.

RN 02-013 12-026

9. South Carolina Public Service Authority, Summer-Winnsboro Line, 230 kV

This line is operated and owned by the SCPSA. It parallels the Summer-Blythewood line for a distance of 3.7 miles on the east side and abutting the existing right-of-way. From that point the line heads in a northeasterly direction and double circuits with the existing SCPSA Pomaria-Winnsboro 69 kV line. Total length is about 14 miles.

RN 12-028

10. VCS1-Killian Line, 230 kV

This line is installed on single pole single circuit (SPSC) and single pole double circuit (SPDC) steel monopole structures with bundled 1272 ACSR conductor. The line is located on variable width right-of-way (R/W) that extends for 35 miles from the VCS1 Switchyard to the Killian 230/115 kV Transmission substation. A SPSC section of this line is on common R/W with SCPSA's VCS1-Winnsboro and Blythewood 230 kV lines and SCE&G's VCS1-Denny Terrace and Pineland 230 kV lines for 1 mile to a point referred to as Winnsboro Junction. From Winnsboro Junction, the line extends 13 miles to Winnsboro and is constructed SPDC with the second circuit being the Parr-Winnsboro 115 kV Line #1. This line section is on common R/W with the Parr-Winnsboro 115 kV Line #2. From Winnsboro, the line extends 15 miles to a point referred to as Blythewood PMSS and is constructed SPDC with the second circuit being the Blythewood-Winnsboro 115 kV line. From Blythewood PMSS, the line extends 6 miles to the Killian 230/115 kV Transmission substation and is constructed SPDC with the second circuit being the Blythewood-Killian 115 kV line.

RN 14-019

11. VCS1, Bus 1-VCS2 Tie, 230 kV

    This line is installed on single pole single circuit (SPSC) steel monopole structures with bundled 1272 ACSR conductor. This is one of three 230 kV bus ties each approximately 1 mile in length that runs between the VCS1 and VCS2 Switchyards. RN 14-019

Distances of all lines from the Virgil C. Summer Nuclear Station terminal to the first major substation are listed in Table 8.2-1.

8.2.2 ANALYSIS

8.2.2.1 Introduction

The basis for design of SCE&G transmission facilities is such that a defined system will maintain stability with the simultaneous loss of any system generator, including Virgil C. Summer Nuclear Station, and the most critical transmission line associated with its loss. The system will also remain stable for the most severe fault condition on any transmission line or substation bus. As such, the loss of any single system generator, including Virgil C. Summer Nuclear Station, does not degrade the alternate system to where it cannot furnish shutdown power to Virgil C. Summer Nuclear Station on an uninterrupted basis. The Virgil C. Summer Nuclear Station buses and the location of the emergency auxiliary transformers and ESF transformers supplying shutdown power are such that no single permanent fault condition can prevent at least 1 of the auxiliary transformers from being available to furnish shutdown power. Table 8.2-1 lists the distances of lines from the Virgil C. Summer Nuclear Station switchyard to each first major substation. RN 02-013

8.2.2.2 Stability Study Results

The System Stability study was performed using Siemens/Power Technologies, Inc. PSS/E power system simulator software. The dynamic simulation cases and dynamics data were updated versions of cases and data which were issued by the NERC MMWG and which were modified to meet the specific requirements of this study. The dynamic simulation cases and data were validated using the simulator software case initialization and model testing features. This was followed by a 30 second steady state simulation in order to demonstrate that the cases and data represented non-disturbed conditions prior to simulating system contingencies. RN 02-013 06-042 10-030

The simulations which were performed for each contingency began with a 1 second steady state period which was followed by a sequence of contingency events and a subsequent new steady state period for a total of 30 seconds for each contingency simulation.

The SCE&G system was modeled for both a 2012/2013 winter system peak load of 4572 MW and a 2013 system light load of 1622 MW conditions the year 2012 for both peak summer load conditions and for light or minimum load conditions. In all cases, the RN 12-039

V. C. Summer generator was modeled as operating at 1029.6 MW. The reactive generating output was modeled at 330 Mvars for those cases that simulated the loss of other generators or various transmission system contingencies. This is the maximum typical reactive power dispatch for this generator. For the cases in which the loss of V. C. Summer generation was simulated, the reactive output was modeled at both 330 and 484 Mvars so as to study the impact of the loss of V. C. Summer generation under normal maximum and absolute maximum reactive output capabilities. All transmission system capacitor banks were modeled as switched on for peak load conditions in accordance with the SCE&G practice of maintaining reserve reactive capability at generators.

In addition, the eight nearby Fairfield Pumped Storage generators were modeled as operating in the pumping rather than in the generating mode for the light load cases.

In all cases, some major generation in the vicinity of the V. C. Summer Nuclear Station was modeled as offline. This was done in order to maximize the impact of the various contingencies on the V. C. Summer Offsite Power Supply buses.

The year 2012 (Summer) was chosen as the base year for this study. Since the previous FSAR update study of the year 2009 which was performed during 2005, a number of changes have been made or have been planned for the SCE&G generating and transmission systems. All actual and planned system improvements were incorporated in the simulation models used for this study.

RN
02-013
06-042
10-030

V. C. Summer Balance of Plant (BOP) station loads were updated. In addition, because it is possible for Engineered Safeguard Features (ESF) bus loads to all be served from one bus, these loads were simulated as being located fully at each ESF bus.

The main generator step-up transformer was replaced during Refuel 18. Although the new main transformer nameplate impedance is greater than that of the one that it replaced, its nameplate rating is also correspondingly greater. The net effect is that the main transformer impedance on a common MVA base is equivalent and has no impact on the stability assessment of this study.

Another change to the V. C. Summer representation was to disengage the generator governor model from the simulation. A review of neighboring utilities practices in modeling nuclear generators for transient stability simulations confirms that this is the accepted practice for representing block loaded nuclear generator governors.

The transfer of the Balance of Plant loads to the Emergency Auxiliary Transformer following a generator breaker operation has been incorporated into the study.

Additional generation is projected to be located on the SCE&G system since the previous study. A total of 34 MW (summer rating) from two internal combustion turbines have been added in the Charleston area. Also, two internal combustion turbines with an output of nearly 132 MW each have been proposed for undetermined locations. For the

purposes of this study, these generators were sited at the existing Canadys and Jasper generating stations. The remote locations of all of the above generators will lessen any potential contribution that these generators might have on transmission system support for V. C. Summer and serve to offset growth in system load since the completion of the previous study. With the exceptions of the additional generation which supplies the growth in loads since the previous study, generation dispatch was similar to that modeled in the 2005 study so as to maintain continuity in study conditions.

A change in the termination of the V. C. Summer to Parr #2 230kV transmission line from the V. C. Summer #3 bus to the #2 bus is scheduled for the fall of 2010. The only study scenario that this retermination is expected to impact is for a fault on the V. C. Summer #2 bus. This study scenario was performed for both the present configuration and again for the retermination.

The V. C. Summer 7.2kV Engineered Safeguard Features (ESF) buses are supplied from the 230kV and the 115kV Offsite Power Supply buses. Protection from unacceptable voltage conditions is provided by loss of voltage and degraded voltage relays that monitor the voltages of the 7.2kV buses. Loss of voltage and degraded voltage relay operating times have been modeled to include tested values plus an additional increment to account for relay operating tolerances. The loss of voltage relay scheme is modeled to operate after a 13.5 cycle (0.225 seconds) time delay at 82.00% of the nominal 7.2kV bus voltage unless the voltage recovers to 82.75% during the time delay period of 0.225 seconds. The degraded voltage relay scheme is set to operate after a 174.0 cycle (2.90 seconds) time delay at 91.75% of the nominal 7.2kV bus voltage unless the voltage recovers to 92.58% during the 2.90 seconds time delay period. Because of the number of variables involving load tap changer settings and ESF bus loads, no attempt has been made to report the voltages at the 7.2kV ESF buses. Descriptions of loss of voltage and degraded voltage timer and relay operations assume that the per unit value of the 7.2kV bus voltages are the same as those at the 230kV and 115kV Offsite Power Supply buses.

RN
02-013
06-042
10-030

The study was performed in order to update the V. C. Summer Final Safety Analysis Report, the first version of which was written in July 1976 and which has been updated periodically since that time. Special attention was given to the analysis of contingencies in the vicinity of the V. C. Summer Nuclear Station during various system disturbances.

Contingencies that were selected for study during system peak load conditions as well as for minimum expected system load (light load) conditions included the loss of both 115kV and 230kV connected generation, bus faults at the V. C. Summer transmission buses, and multiple line faults on nearby 115kV and 230kV transmission lines. The light load contingency cases also included an instance of the loss of the largest system load.

The results of this study demonstrate that the SCE&G generating and transmission system is stable for the conditions that were studied. The contingencies were selected so as to test the integrity of the 115 kV and 230kV Offsite Power Supply buses at the V. C. Summer Station. No contingency conditions were found to result in the

simultaneous loss of both Offsite Power Supply buses. Neither were any conditions found to result in underfrequency load shedding operations or generator underfrequency/overfrequency tripping. Finally, there were no indications of voltage instability or stability limits.

CONCLUSIONS

Each of the contingencies which were simulated for this study were evaluated for generator rotor angle, generator frequency deviation, tie line flows, system underfrequency load shedding, underfrequency/overfrequency tripping operations, and system voltage responses. In addition, the effects of each contingency on the 230kV and 115kV V. C. Summer Offsite Power Supply buses were examined as well as the resulting steady-state power flows on the transmission lines which are connected to the V. C. Summer transmission substation.

The generator rotor angle responses demonstrated that no conditions existed in which a generator would become unstable. None of the transmission lines connected to the V. C. Summer substation was found to trip due to overload conditions. All tie lines connecting the SCE&G system to neighboring systems remained in service throughout all conditions studied.

RN
02-013
06-042
10-030

Generator and system frequency responses were all within the normal operating ranges and there was no indication of system underfrequency load shedding or generator underfrequency/overfrequency tripping.

The voltage responses of the 230kV and 115kV V. C. Summer Offsite Power Supply buses were moderate. Although some fault conditions did result in the initiation of degraded voltage and loss of voltage timers, there were no degraded or loss of voltage operations, except in two cases. The first case is for a fault of the V. C. Summer #3 bus, which serves as the source of the 230kV ESF buses. The second case is the peak load simulation of a fault at Parr 115kV #2 bus which serves as the source of the 115kV ESF buses, resulting in a loss of voltage operation of the 115kV V. C. Summer ESF bus. In an additional case, the light load simulation of a fault at the VCS #1 bus with a maximum of 484 Mvar generation, the slow recovery of the 230kV voltage alone with a slow voltage fluctuation of the 230kV voltage suggested that a loss of voltage relay operation could occur with a small change in the voltage response.

In none of the cases were both the 230kV and the 115kV Offsite Power Supply buses lost for the same contingency or degraded to a point which resulted in degraded voltage or loss of voltage relay operation for ESF loads served from both the 230kV and 115kV Offsite Power Supply buses.

8.2.3 REFERENCES

1. Institute of Electrical and Electronics Engineers, "Criteria for Class 1E Electric Systems for Nuclear Power Generating Stations," IEEE-308-1971.

TABLE 8.2-1

DISTANCES OF LINES TO FIRST MAJOR SUBSTATION

First Major Substation	Distance from Virgil C. Summer Nuclear Station Terminal (miles)	
		RN 12-039
Edenwood	33.02	RN 02-013
Denny Terrace	26.25	
Pineland No. 1	24.4	
Fairfield No. 1	1.24	
Fairfield No. 2	1.24	
Blythewood	20.0	RN 12-026 14-019
VCS2 Bus 2 Tie	0.87	RN 12-026 12-017
VCS2 Bus 3 Tie	0.91	
Winnsboro	14.0	RN 12-028
Killian	35.0	RN 14-019
VCS2	1.0	

TABLE 8.2-2

ALLOWABLE VARIATION IN OFFSITE SYSTEM VOLTAGE

Transformer(s)	Connected Buses	Allowable Range of Offsite Voltage (Kilo Volts)			RN
115 kV Source		Unit On Line 330 Mvar	Unit On Line 484 Mvar	Unit Off Line	10-030
XTF4 with XTF6	1DA [1] or 1DB[5]	105.5 to 131.3	106.4 to 131.3	102.3 to 131.3	
XTF4 with XTF6	1DA and 1DB [3]	112.8 to 131.3	113.7 to 131.3	109.5 to 131.3	
XTF4 and XTF5	1DA [2] or 1DB[2, 5]	113.4 to 119.8	113.4 to 119.8	109.3 to 119.8	
XTF4 and XTF5	1DA and 1DB [2,3]	114.8 to 119.8	115.7 to 119.8	111.6 to 119.8	
XTF4 or XTF5	1DA [2] or 1DB[5]	114.7 to 119.8	115.6 to 119.8	111.5 to 119.8	
XTF4 or XTF5	1DA and 1DB [2,3]	119.5 to 119.8 [4]	119.5 to 119.8 [4]	117.5 to 119.8	RN 99-185 06-042 10-030 13-008
230kV Source					
XTF31	1DB [1] or 1DA[5]	225.7 to 239.6	228.4 to 239.6	218.3 to 239.6	
XTF31	1DA and 1DB [3]	233.0 to 239.6	235.8 to 239.6	225.7 to 239.6	
XTF31	1DB and 1C or 1DA and 1C[5]	226.4 to 239.6	229.1 to 239.6	219.0 to 239.6	
XTF31	1DA, 1DB, and 1C [3]	233.7 to 239.6	236.5 to 239.6	226.4 to 239.6	

NOTES:

1. Normal operating alignment
2. Used only if regulator is out of service
3. Maintenance only, LCO in effect, if in Modes 1-4 — RN 06-042
4. Limit Mvar generation output to 170 Mvar — RN 10-030
5. Alternate operating alignment — RN 13-008

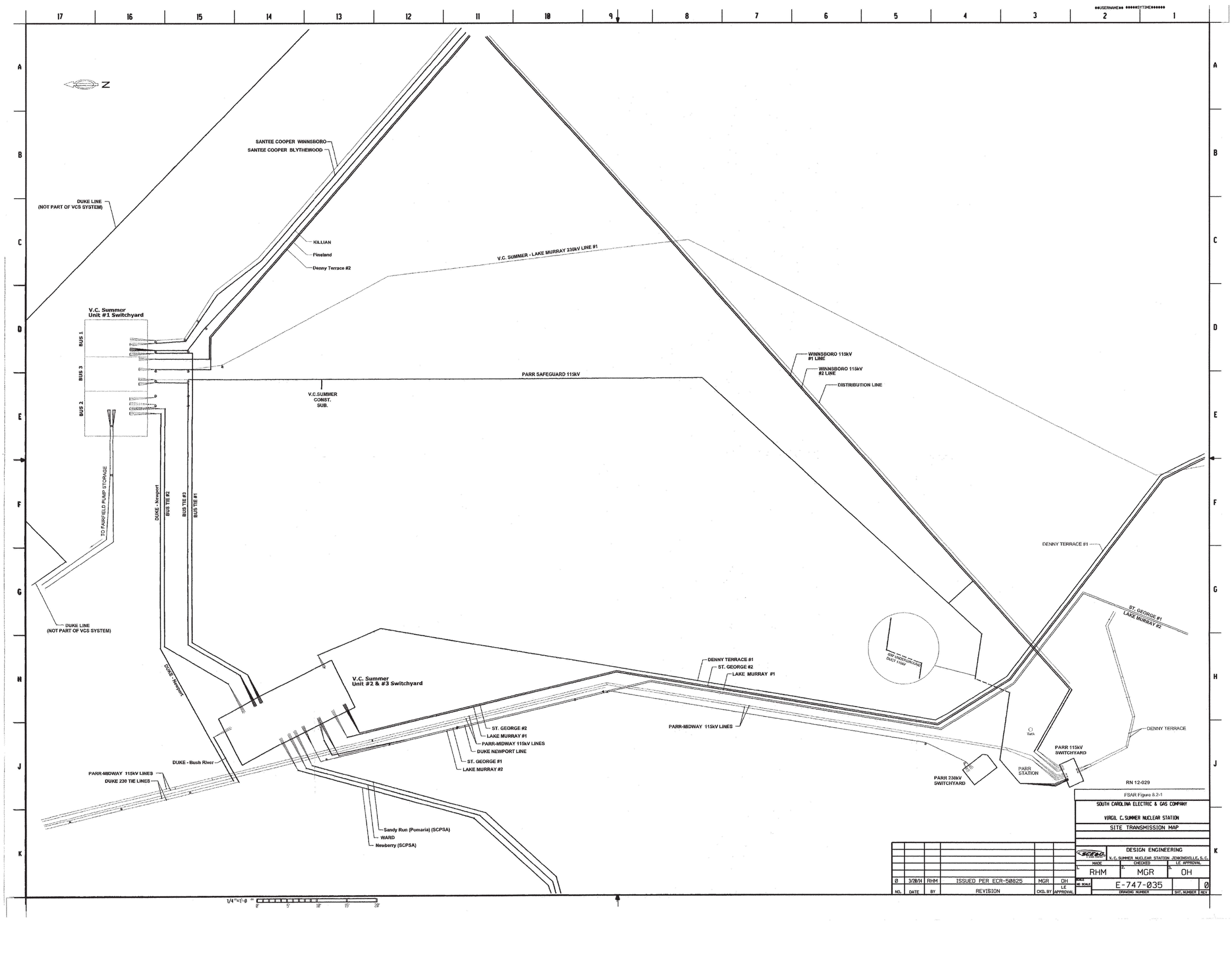

RN 12-029

FSAR Figure 8.2-1

SOUTH CAROLINA ELECTRIC & GAS COMPANY

VIRGIL C. SUMMER NUCLEAR STATION

SITE TRANSMISSION MAP

DESIGN ENGINEERING
V. C. SUMMER NUCLEAR STATION JENKINSVILLE, S. C.

MADE	CHECKED	LE APPROVAL
1. RHM	2. MGR	3. OH

NO.	DATE	BY	REVISION	CKD. BY	LE APPROVAL
0	3/28/14	RHM	ISSUED PER ECR-50825	MGR	OH

SCALE: NO SCALE

DRAWING NUMBER: E-747-035

SHT. NUMBER: 0

REV: 0

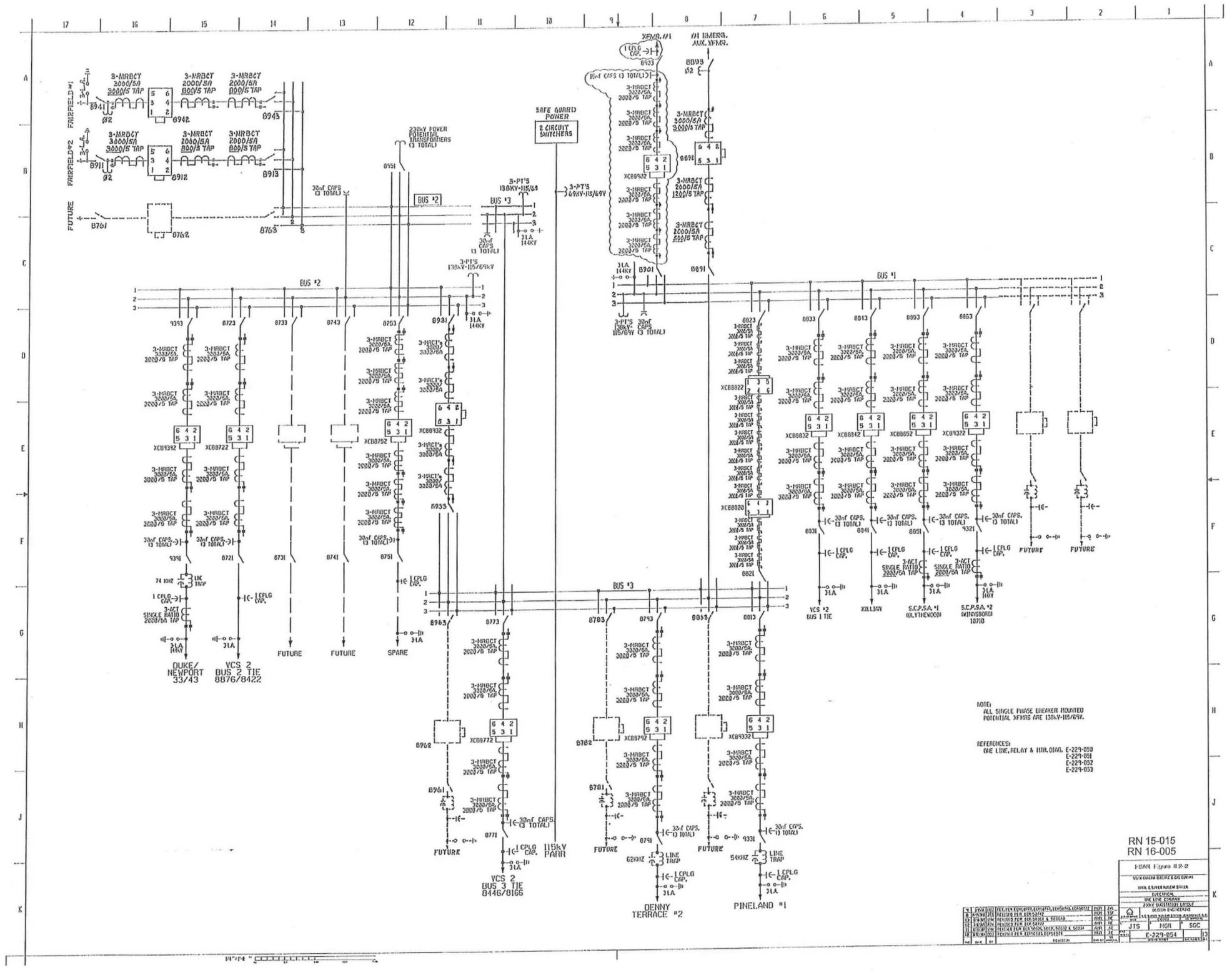
FAIRFIELD #1
FAIRFIELD #2
FUTURE
3-MRDCT 2000/5A 3000/5 TAP
3-MRDCT 3000/5A 3000/5 TAP
3-MRDCT 2000/5A 1200/5 TAP
3-MRDCT 2000/5A 800/5 TAP
Ø2
8941
8942
8943
8911
8912
8913
8761
8762
8763
30nf CAPS (3 TOTAL)
230kV POWER POTENTIAL TRANSFORMERS (3 TOTAL)
8951
BUS #2
BUS #3
BUS #1
3-PT'S 138kV-115/69kV
3-PT'S 69kV-115/69V
SAFE GUARD POWER
2 CIRCUIT SWITCHERS
XFMR. #1
#1 EMERG. AUX. XFMR.
8693
8692
8691
8901
3LA 144KV
3-PT'S 138kV 115/69V CAPS (3 TOTAL)
XCB8932
XCB8822
XCB8832
XCB8842
XCB8852
XCB8862
XCB9322
XCB8020
8823
8833
8843
8853
8863
8821
8831
8841
8851
9321
1 CPLG CAP.
31A
YCS #2 BUS 1 TIE
KILLEN
S.C.P.S.A. #1 (BLYTHEWOOD)
S.C.P.S.A. #2 (WINSBORO) 10710
FUTURE
9393
8723
8733
8743
8753
8931
XCB9392
XCB8722
XCB8752
XCB8932
9391
8721
8731
8741
8751
8933
74 KHZ LINE TRAP
3-MCT SINGLE RATIO 2000/5A TAP
DUKE/ NEWPORT 33/43
YCS 2 BUS 2 TIE 8876/8422
SPARE
8963
8773
8783
8793
8803
8813
XCB8772
XCB8782
XCB8792
XCB9332
8962
8961
8771
8781
8791
9331
62KHZ LINE TRAP
54KHZ LINE TRAP
115kV PARR
YCS 2 BUS 3 TIE 8446/8166
DENNY TERRACE #2
PINELAND #1
NOTE:
ALL SINGLE PHASE BREAKER MOUNTED POTENTIAL XFMRS ARE 138kV-115/69V.
REFERENCES:
ONE LINE, RELAY & WIR. DIAG. E-229-050
E-229-051
E-229-052
E-229-053
RN 15-015
RN 16-005
FSAR Figure 8.2-2
SOUTH CAROLINA ELECTRIC & GAS COMPANY
ELECTRICAL
ONE LINE DIAGRAM
JTS
MGR
SGC
E-229-054

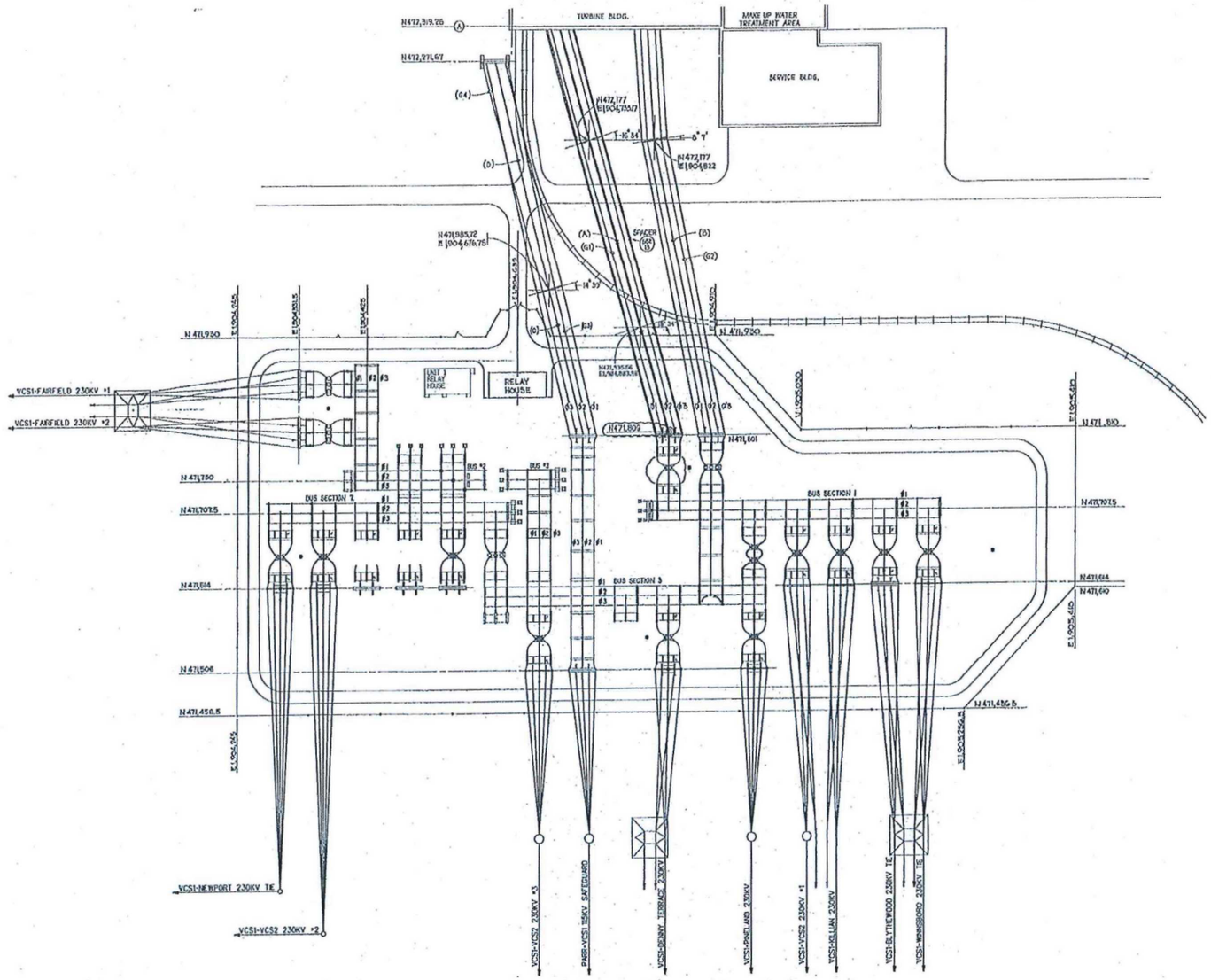

OVERHEAD CONDUCTOR SAG CHART

SPAN LOCATION	SPAN	PHASE	SPAN LENGTH (FT.)	WIRE SIZE	BAR TENSION POWER LOADED (PER WIRE)	STRINGING SAG IN FEET AT TEMPERATURE (OTHER POINT OF ATTACHMENT) 10°	20°	30°	40°	50°	60°	70°	80°	90°	100°
A	230 KV BUS STRUCTURE AND DISCONNECT, 230 KV BUSSES, TO INTERMEDIATE STRUCTURE	#1,#2,#3	311	2-2256 KCMIL 84/19 ACSR	5,900# WITH 20.4 PSF WIND & 60° RADIAL ICE 2,657#	1.75	1.83	1.92	2.0	2.09	2.19	2.25	2.33	2.42	2.50
B	230 KV BUS AND DISCONNECT STRUCTURE, 230 KV BUSSES, TO INTERMEDIATE STRUCTURE	#1,#2,#3	314	2156 KCMIL A.C.S.R. 45/7 STRAND	WITH 20.2 PSF WIND & 60 ICE 4,900	1.59	1.67	1.71	1.83	1.93	2.03	2.11	2.19	2.31	2.36
C	230 KV BUS, LINE DEAD END STRUCTURE 230 KV BUSSES, TO INTERMEDIATE STRUCTURE	#1,#2,#3	330	402 KCMIL A.C.S.R. 26/7 STRAND	WITH 25" ICE & 6.8 PSF WIND 4,500	3.33	3.37	3.45	3.53	3.62	3.71	3.79	3.87	3.95	4.03
D	INTERMEDIATE STRUCTURE TO 230 KV BUS, #1 & 2 DEAD END STRUCTURE	#1,#2,#3	316	402 KCMIL A.C.S.R. 26/7 STRAND	WITH 25" ICE & 6.8 PSF WIND	1.8	1.91	1.95	1.99	2.08	2.16	2.21	2.25	2.31	2.36

OVERHEAD GROUND WIRE SAG CHART

SPAN LOCATION	SPAN	SPAN LENGTH (FT.)	WIRE SIZE	BAR TENSION FULLY LOADED (PER WIRE)	STRINGING SAG IN FEET AT TEMPERATURE (OTHER POINT OF ATTACHMENT) 10°	20°	30°	40°	50°	60°	70°	80°	90°	100°
G1	230 KV BUS STRUCTURE AND DISCONNECT, 230 KV BUSSES, TO INTERMEDIATE STRUCTURE	311	1442' OPGW 97/24/C&C	5000# WITH 25.6 PSF WIND & 60° RADIAL ICE 2,500#	0.42	0.42	0.42	0.58	0.58	0.58	0.67	0.67	0.75	0.75
G2	230 KV BUS AND DISCONNECT STRUCTURE, 230 KV BUSSES, TO INTERMEDIATE STRUCTURE	314	3/8" H.S.STEEL, 7 STRAND, GALV.	WITH 20.2 PSF WIND & 0 ICE 2,500	2.93	2.95	2.99	3.05	3.12	3.19	3.45	3.53	3.93	4.11
G3	230 KV BUS, LINE DEAD END STRUCTURE 230 KV BUSSES, TO INTERMEDIATE STRUCTURE	330	3/8" H.S.STEEL, 7 STRAND, GALV.	WITH 25" ICE & 6.8 PSF WIND 2,500	8.51	8.59	8.83	9.03	9.23	9.24	9.39	9.51	9.90	9.95
G4	INTERMEDIATE STRUCTURE TO 230 KV BUS, #1 & 2 DEAD END STRUCTURE	316	3/8" H.S.STEEL 7 STRAND, GALV.	WITH 25" ICE & 6.8 PSF WIND	1.39	1.43	1.51	1.59	1.69	1.78	1.93	2.01	2.15	2.22

REFERENCES:

E-229-001	LAYOUT - PLOT PLAN
E-229-002	230KV BUSSES, ANNEX. - PLAN BUS SECTIONS 2 & 3
E-229-003	230KV BUSSES, ANNEX. - PLAN BUS SECTIONS 1 & 3
E-229-005	OVERHEAD LINE ANNEX, 230CV & 115KV OUTDOOR SUBS. AREA
E-229-009	OVERHEAD DISTANCE - PLAN TAKE TOWERAGE
E-229-010	SITE IMPROVEMENTS - NORTH PLOT PLAN - PLANT ROADS & PARKING AREAS
E-15019	TRANSMISSION LINES AT V.C. SUMNER STATION (E.C.C., S. C. DEPT.)
VCS2230-SD001E	SCE&G TRANSMISSION & DISTRIBUTION DEPT. DRAWINGS

NOTES:

1. ◆ INDICATES LOCATION OF LIGHTNING MAST.

RN 15-015

FSAR Figure 8.2-2a

SOUTH CAROLINA ELECTRIC & GAS COMPANY

V.C.SUMNER NUCLEAR STATION

ELECTRICAL

GENERAL ARRANGEMENT

230 KV SUBSTATION ARRANGEMENT

DESIGN ENGINEERING

NO	BY/DATE	DOJ	REVISED PER ECR-50803	MGR	NC
14	9/8/78	DOJ	REVISED PER ECR50748A	MGR	NC
13	8/8/78	RHM	REVISED PER ECR-50222	MGR	NC
12	8/8/78	VMH	REVISED PER ECR-50296	AMT	NC
11	5/8/78	VMH	REVISED PER ECR-50430-2	AMT	NC
10	1/9/78	VMH	REVISED PER ECR-50430-1	AMT	NC
NO.	DATE	BY	REVISION	CHK'D BY	APPROVED

DES	DRN	CHK
DOJ	RHM	HD

E-229-001 (10)

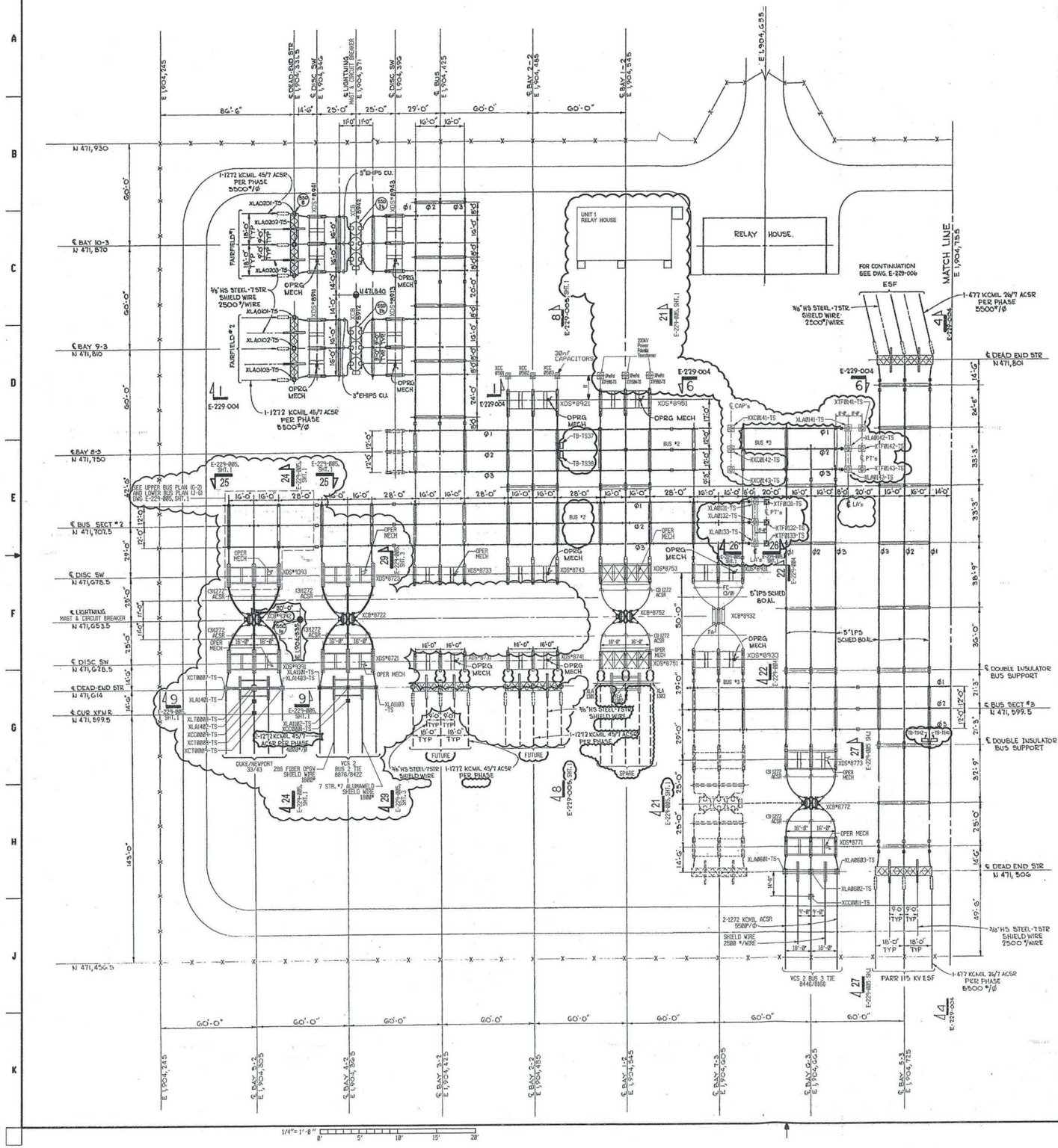
N
E 1,904,425
℄ DEAD END STR E 1,904,331.5
℄ DISC SW E 1,904,346
℄ LIGHTNING MAST & CIRCUIT BREAKER E 1,904,371
℄ DISC SW E 1,904,396
℄ BUS E 1,904,425
℄ BAY 2-2 E 1,904,485
℄ BAY 1-2 E 1,904,545
E 1,904,655
MATCH LINE E 1,904,755
80'-6"
14'-6"
25'-0"
25'-0"
29'-0"
60'-0"
60'-0"
N 471,930
℄ BAY 10-3 N 471,870
℄ BAY 9-3 N 471,810
℄ BAY 8-3 N 471,750
℄ BUS SECT "2 N 471,707.5
℄ DISC SW N 471,678.5
℄ LIGHTNING MAST & CIRCUIT BREAKER N 471,653.5
℄ DISC SW N 471,628.5
℄ DEAD-END STR N 471,614
℄ CUR XFMR N 471,599.5
N 471,456.5
1-1272 KCMIL 45/7 ACSR PER PHASE 5500#/ø
3"EHIPS CU.
FAIRFIELD #1
FAIRFIELD #2
XLA0201-TS
XLA0202-TS
XLA0203-TS
XLA0101-TS
XLA0102-TS
XLA0103-TS
OPRG MECH
OPER MECH
⅜" HS STEEL-7STR SHIELD WIRE 2500 #/WIRE
UNIT 1 RELAY HOUSE
RELAY HOUSE
FOR CONTINUATION SEE DWG. E-229-006
ESF
⅜" HS STEEL-7STR SHIELD WIRE 2500#/WIRE
1-477 KCMIL 26/7 ACSR PER PHASE 5500#/ø
℄ DEAD END STR N 471,801
E-229-004
E-229-005, SHT.1
E-229-005, SHT.2
E-229-006
E-229-008
38mf CAPACITORS
200kV Power Potential Transformer
XDS*8951
XDS*8743
XDS*8753
XDS*8733
XDS*8723
XDS*8713
XDS*8703
XDS*8693
XDS*8683
XDS*8673
XDS*8663
XDS*8653
XDS*8643
XDS*8633
XDS*8623
XDS*8613
XDS*8603
XDS*8593
XDS*8583
XDS*8573
XDS*8563
XDS*8553
XDS*8543
XDS*8533
XDS*8523
XDS*8513
XDS*8503
XDS*8493
XDS*8483
XDS*8473
XDS*8463
XDS*8453
XDS*8443
XDS*8433
XDS*8423
XDS*8413
XDS*8403
XDS*8393
XDS*8383
XDS*8373
XDS*8363
XDS*8353
XDS*8343
XDS*8333
XDS*8323
XDS*8313
XDS*8303
XCB*8722
XCB*8732
XCB*8742
XCB*8752
XCB*8762
XCB*8772
XCB*8782
XCB*8792
XCB*8802
XCB*8812
XCB*8822
XCB*8832
XCB*8842
XCB*8852
XCB*8862
XCB*8872
XCB*8882
XCB*8892
XCB*8902
XCB*8912
XCB*8922
XCB*8932
XCB*8942
XCB*8952
XCB*8962
XCB*8972
XCB*8982
XCB*8992
XCB*9002
XCB*9012
XCB*9022
XCB*9032
XCB*9042
XCB*9052
XCB*9062
XCB*9072
XCB*9082
XCB*9092
XCB*9102
XCB*9112

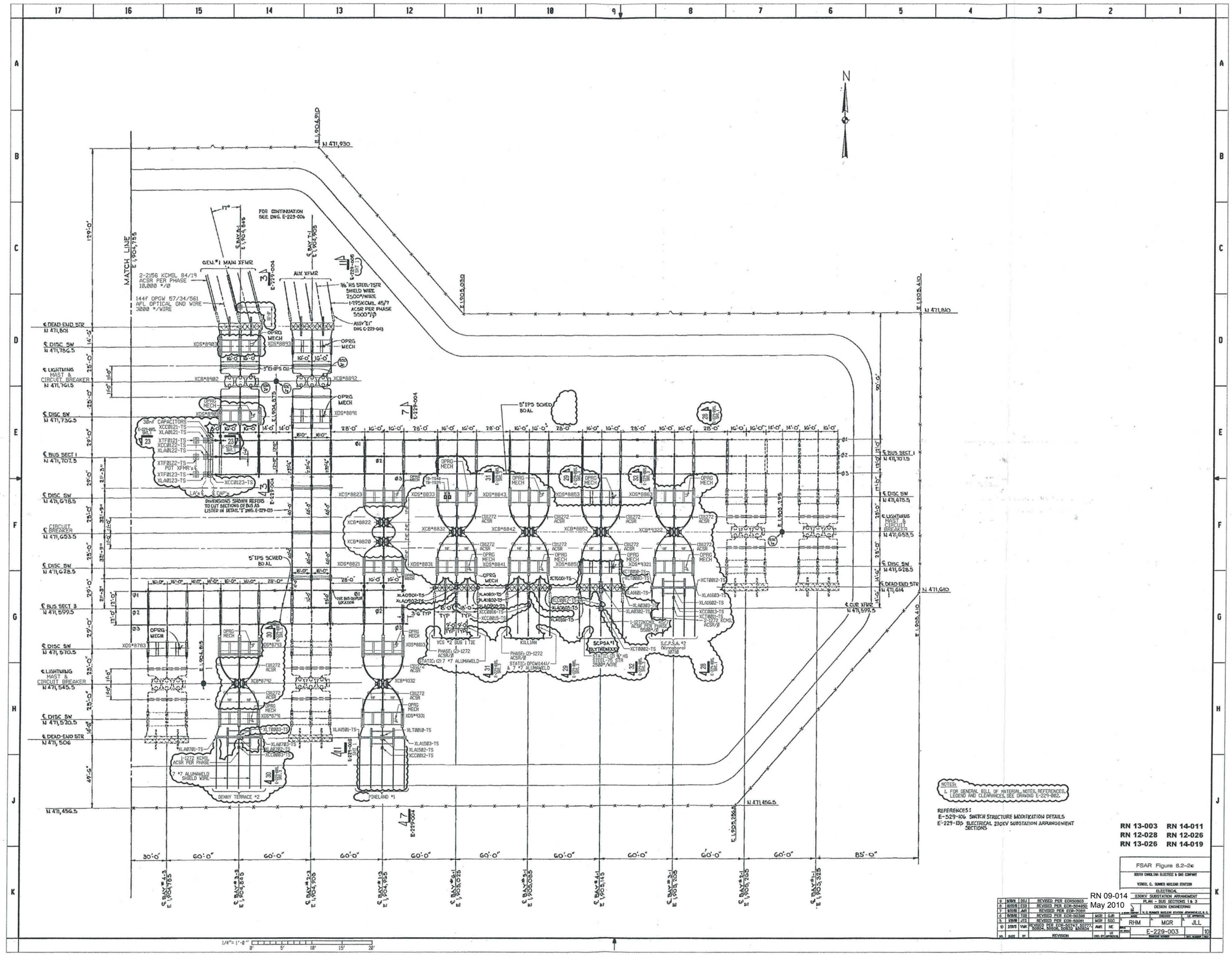

NOTES:
1. FOR GENERAL BILL OF MATERIAL, NOTES, REFERENCES, LEGEND AND CLEARANCES, SEE DRAWING E-229-002.

REFERENCES:
E-529-106 SWITCH STRUCTURE MODIFICATION DETAILS
E-229-135 ELECTRICAL 230KV SUBSTATION ARRANGEMENT SECTIONS

RN 13-003 RN 14-011
RN 12-028 RN 12-026
RN 13-026 RN 14-019

FSAR Figure 8.2-2c

SOUTH CAROLINA ELECTRIC & GAS COMPANY

VIRGIL C. SUMMER NUCLEAR STATION

ELECTRICAL

230KV SUBSTATION ARRANGEMENT

PLAN - BUS SECTIONS 1 & 3

DESIGN ENGINEERING

S.C.E. & G. COMPANY - NUCLEAR PROJECTS DEPARTMENT - COLUMBIA, S.C.

NO	DATE	BY	REVISION	DES. ENGR.	CHKD. BY	APPROVAL
9	6/8/94	DCJ	REVISED PER ECR50803	MGR	GJR	
8	8/27/93	ESR	REVISED PER ECR-504995	MGR	SGC	
7	8/27/93	AMT	REVISED PER ECR-70695			
6	8/28/92	TGS	REVISED PER ECR-50398	MGR	GJR	
5	3/26/92	ATZ	REVISED PER ECR-50081	MGR	SGC	
10	2/5/15	VMK	REVISED PER ECR-50747, 50777, 50804, 50806, 50832, 50854	ANS	NC	

DRAWN: RHM | CHKD: MGR | DES. APPROVAL: JLL

DRAWING NUMBER: E-229-003 | REV: 10

RN 09-014
May 2010

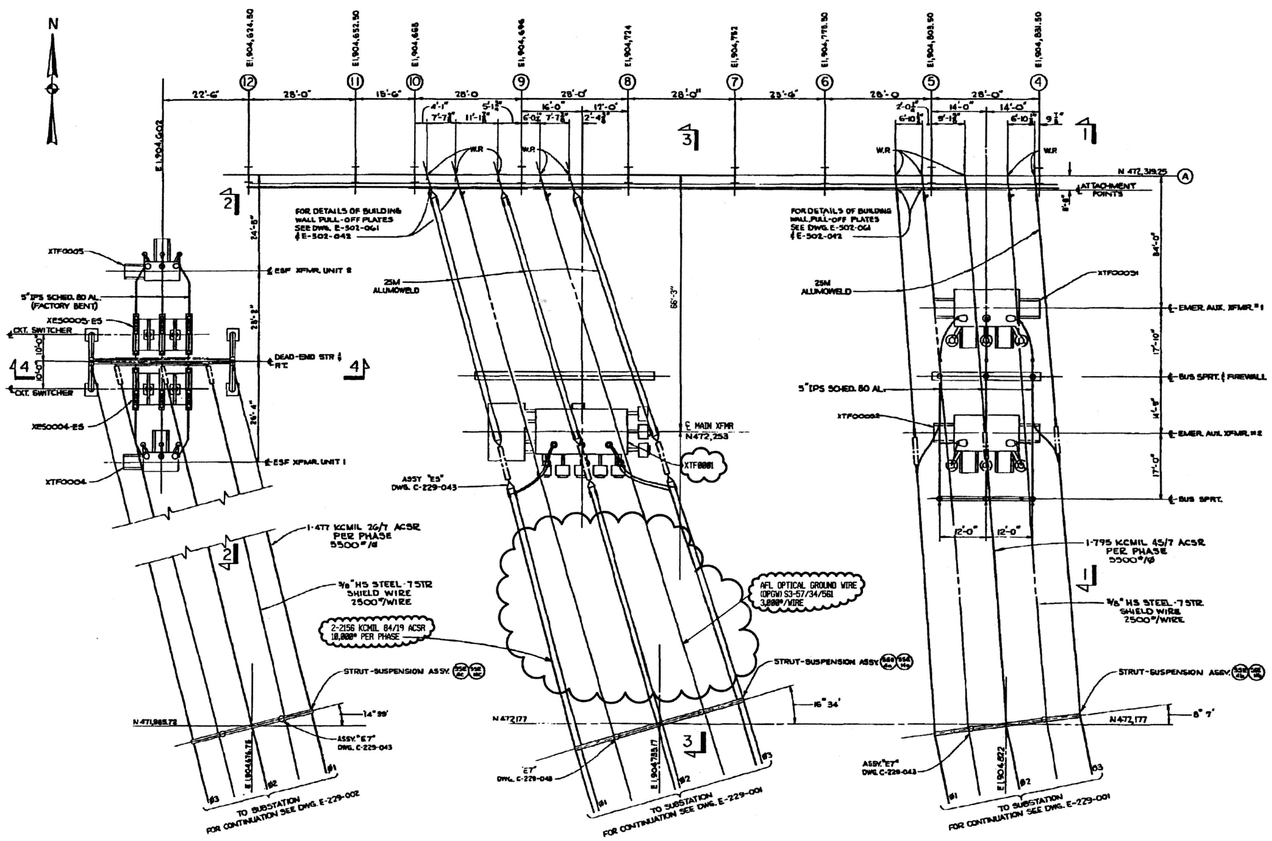

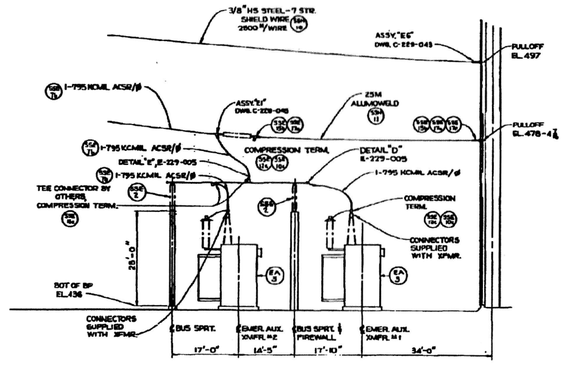

SECTION 1-1

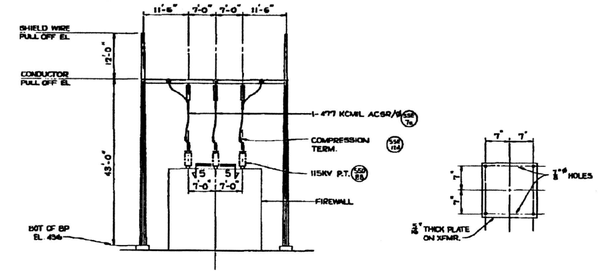

SECTION 4-4

SECTION 5-5

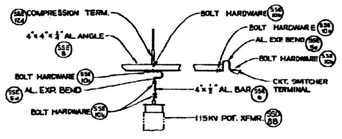

DETAIL A

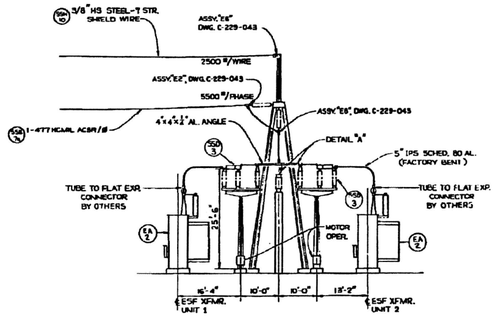

SECTION 2-2

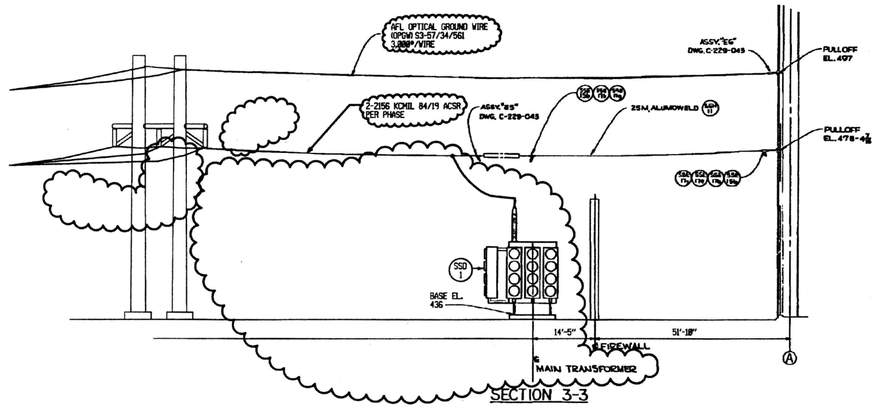

SECTION 3-3

FOR INFORMATION ONLY - EQUIPMENT LISTED BELOW TO BE FURNISHED BY OTHERS:

1. ALL CIRCUIT SWITCHERS ARE S & C ELECTRIC COMPANY, BASE III, 121216-C1, COMPLETE WITH POST TYPE INSULATORS, AND 4-HOLE NEMA WELDED TERM. PAD.
2. THE MAIN TRANSFORMER IS MITSUBISHI ELECTRIC CORPORATION.
3. THE EMERGENCY AUXILIARY TRANSFORMERS ARE WESTINGHOUSE ELECTRIC CORPORATION.
4. THE ENCLOSED SURGE ARRESTER FLASHOVER TRANSFORMERS ARE WESTINGHOUSE ELECTRIC CORPORATION COMPLETE WITH 4-HOLE NEMA MOUNTED, STUD TO FLAT CONNECTOR.
5. ALL 230 KV POST INSULATORS ARE LAPP, CATALOG #280843-70.

NOTES:

1. ALL 5" IPS SCHED. 80 ALUMINUM BUS SPANS OF 20 FEET AND LONGER TO BE DAMPED WITH ALCOA CONDUCTOR PRODUCTS COMPANY, ESTERLINE, WELD-ON BUS VIBRATION DAMPERS.
2. ALL STRAIN ASSEMBLIES FOR CONDUCTOR AND SHIELD WIRE WILL BE SUPPLIED BY OTHERS.
3. ALL ALUMINUM BUS BENDING DRAWING SHALL BE FURNISHED AS FACTORY BENT SECTIONS.
4. FOR IDENTIFICATION STRUCTURES, GATES, AND SWITCHES SEE SPECIFICATION 1F-431-844681-000.
5. THESE DRAWINGS TO BE NUMBER IN CONJUNCTION WITH ANTHUN TATHAM & ASSOC. DWGS. E75-1M.

CLEARANCE:

	230 KV	115 KV
1. BETWEEN OPPOSING LIVE PARTS	15'-8" REC. 7'-3" MIN.	10'-8" REC. 7'-8" MIN.
2. BETWEEN LIVE PARTS & GROUND	8'-6" REC. 5'-11" MIN.	5'-8" REC. 4'-8" MIN.
3. TO ANY LOWER VOLTAGE	12'-8" REC. 10'-4" MIN.	12'-8" REC. 8'-8" MIN.
4. ISOLATION ELEVATION	15'-8"	12'-8"

RN 09-014
May 2010

NO.	DATE	BY	REVISION	CKD. BY	LE APPROVAL
5	02/22/10	ESB	REVISED PER ECR-50495D	HJM	GSK
4	9/24/01	DDJ	REVISED PER ECR-70028	MGR	DDJ
3	11/01/95	DDJ	REVISED PER MRF-22337	MGR	KJR

FSAR Figure 8.2-2d

SOUTH CAROLINA ELECTRIC & GAS COMPANY

VIRGIL C. SUMMER NUCLEAR STATION

ELECTRICAL

OVERHEAD LINE ARRANGEMENT 230KV AND 115KV OUTDOOR TRANSFORMER AREA

DESIGN ENGINEERING

A SCANA COMPANY | V. C. SUMMER NUCLEAR STATION JENKINSVILLE, S. C.

MADE	CHECKED	LE APPROVAL
DDJ	MGR	KJR

DRAWING NUMBER: E-229-006 | SHT. NUMBER: 5 | REV.

1/4"=1'-0" (8' 5' 10' 15' 20')

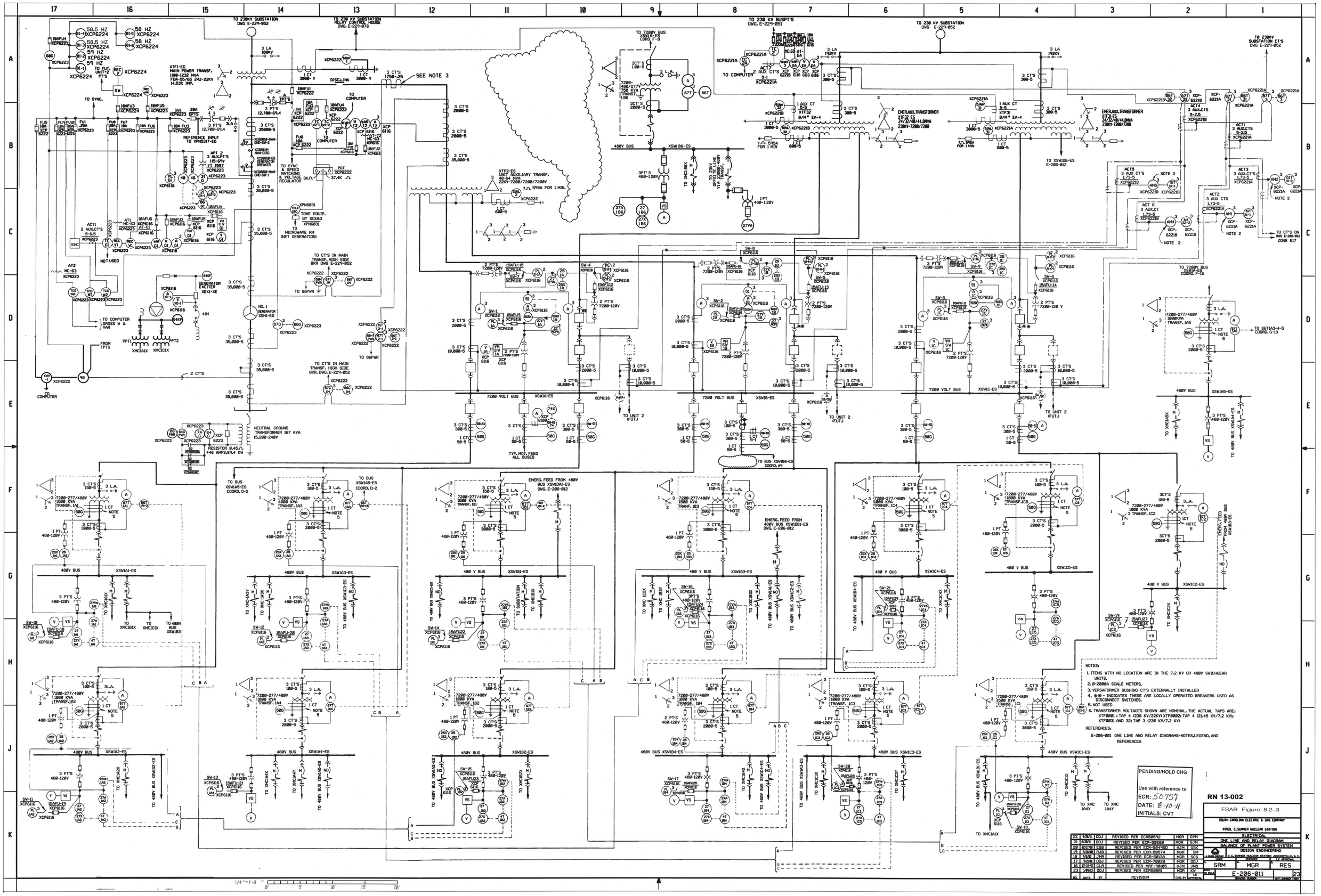
TO 230KV SUBSTATION DWG E-224-852
TO 230 KV SUBSTATION RELAY CONTROL HOUSE DWG. E-224-876
TO 230 KV BUSPT'S DWG. E-223-851
TO 230 KV SUBSTATION DWG E-224-852
TO 230KV SUBSTATION CT'S DWG E-224-852
XTF1-EG MAIN POWER TRANSF. 1188-1232 MVA FOA-55/65 242-22KV 14.53% IMP.
XTF2-ES UNIT AUXILIARY TRANSF. 48-64 MVA 22KV-7200/7200/7200V 7.Ω, 595A FOR 1 MIN.
7200-480/277V 750 KVA TRANSF. 1B6
EMER.AUX.TRANSFORMER 1TF3E ES 24/32/40/44.8MVA 230KV-7200/7200
7200-277/480V 1800 KVA TRANSF. 1A1
7200-277/480V 1800 KVA TRANSF. 1A3
7200-277/480V 1800 KVA TRANSF. 1A4
7200-277/480V 1800 KVA TRANSF. 1A2
7200-277/480V 1800 KVA TRANSF. 1B1
7200-277/480V 1800 KVA TRANSF. 1B2
7200-277/480V 1800 KVA TRANSF. 1B4
7200-277/480V 1800 KVA TRANSF. 1C4
7200-277/480V 1800 KVA TRANSF. 1C5
7200-277/480V 1800 KVA TRANSF. 1C2
7200-277/480V 1800 KVA TRANSF. 1C1
7200-277/480V 1800 KVA TRANSF. 1C3
NEUTRAL GROUND TRANSFORMER 167 KVA 15,200-240V
RESISTOR 8.45Ω 446 AMPS.89.4 KW
7200 VOLT BUS XSW1A-ES
7200 VOLT BUS XSW1B-ES
7200 VOLT BUS XSW1C-ES
480V BUS XSW1A1-ES
480V BUS XSW1A2-ES
480V BUS XSW1A3-ES
480V BUS XSW1A4-ES
480V BUS XSW1A5-ES
480V V BUS XSW1B1-ES
480V BUS XSW1B2-ES
480V BUS XSW1B4-ES
480V V BUS XSW1B3-ES
480V V BUS XSW1C4-ES
480V BUS XSW1C3-ES
480V V BUS XSW1C5-ES
480V BUS XSW1C1-ES
480V V BUS XSW1C2-ES
TYP, MOT, FEED ALL BUSES
EMERG. FEED FROM 480V BUS XSW1D1-ES DWG. E-206-812
EMERG. FEED FROM 480V BUS XSW1D1-ES DWG. E-206-812
EMERG. FEED FROM 480V BUS XSW1B3-ES
TO BUS XSW1A5-ES COORD. D-2
TO BUS XSW1A5-ES COORD. D-2
TO BUS XSW1B6-ES COORD. A-9
TO 7200V BUS XSW1B-ES COORD. F-15
TO 86T1A3-4-5 COORD. G-13
TO CT'S IN MAIN TRANSF. HIGH SIDE BKR DWG E-223-852
TO CT'S IN MAIN TRANSF. HIGH SIDE BKR. DWG. E-223-852
TO CT'S ON DWG E-206-812 ZONE E17
TO SYNC.
TO COMPUTER
TO MICROWAVE RM (NET GENERATION)
TO 86PWR
TO UNIT 2 (FUT.)
TO XSW1D8-ES E-206-812
REFERENCE INPUT TO XPN5317-EG
NOT USED
FROM TPTS
TO SYNC & SPEED MATCHING & VOLTAGE REGULATOR
TONE EQUIP. BY SCE&G XPN6831
GENERATOR EXCITER XEX1-XE
NO.1 GENERATOR XGN1-EG
TYP. MOT. FEED ALL BUSES
TO XMC1A1X
TO XMC1A4X
TO XMC1A4Y
TO XMC1A5X
TO XMC1B1X
TO XMC1B2X
TO XMC1B4X
TO XMC1C1X
TO XMC1C2X
TO XMC1C3X
TO XMC1C4X
TO XMC1A5X
TO XMC 1A4Y
TO XMC 1A1X
TO 480V BUS XSW1A4-ES
TO 480V BUS XSW1A5-ES
TO 480V BUS XSW1B1-ES
TO 480V BUS XSW1B2-ES
TO 480V BUS XSW1B4-ES
TO 480V BUS XSW1C1-ES
TO 480V BUS XSW1C2-ES
TO 480V BUS XSW1C3-ES
TO 480V BUS XSW1C4-ES
TO 480V BUS XSW1C5-ES
TO 480V BUS XSW1A3-ES
TO 480V BUS XSW1B3-ES
TO 480V BUS XSW1A4-ES
TO 480V BUS XSW1B4-ES
TO 480V BUS XSW1C3-ES
TO 480V BUS XSW1B1-ES
TO 480V BUS XSW1A1-ES
TO 480V BUS XSW1A2-ES
TO 480V BUS XSW1B2-ES
TO 480V BUS XSW1C1-ES
TO 480V BUS XSW1A3-ES
TO 480V BUS XSW1B3-ES
TO 480V BUS XSW1C2-ES
TO 480V BUS XSW1A4-ES
TO 480V BUS XSW1B4-ES
TO 480V BUS XSW1C3-ES
TO 480V BUS XSW1B1-ES
TO 480V BUS XSW1A1-ES
TO 480V BUS XSW1A2-ES
TO 480V BUS XSW1B2-ES
TO 480V BUS XSW1C1-ES
TO 480V BUS XSW1B3-ES
TO 480V BUS XSW1C2-ES
TO 480V BUS XSW1C4-ES
TO 480V BUS XSW1C5

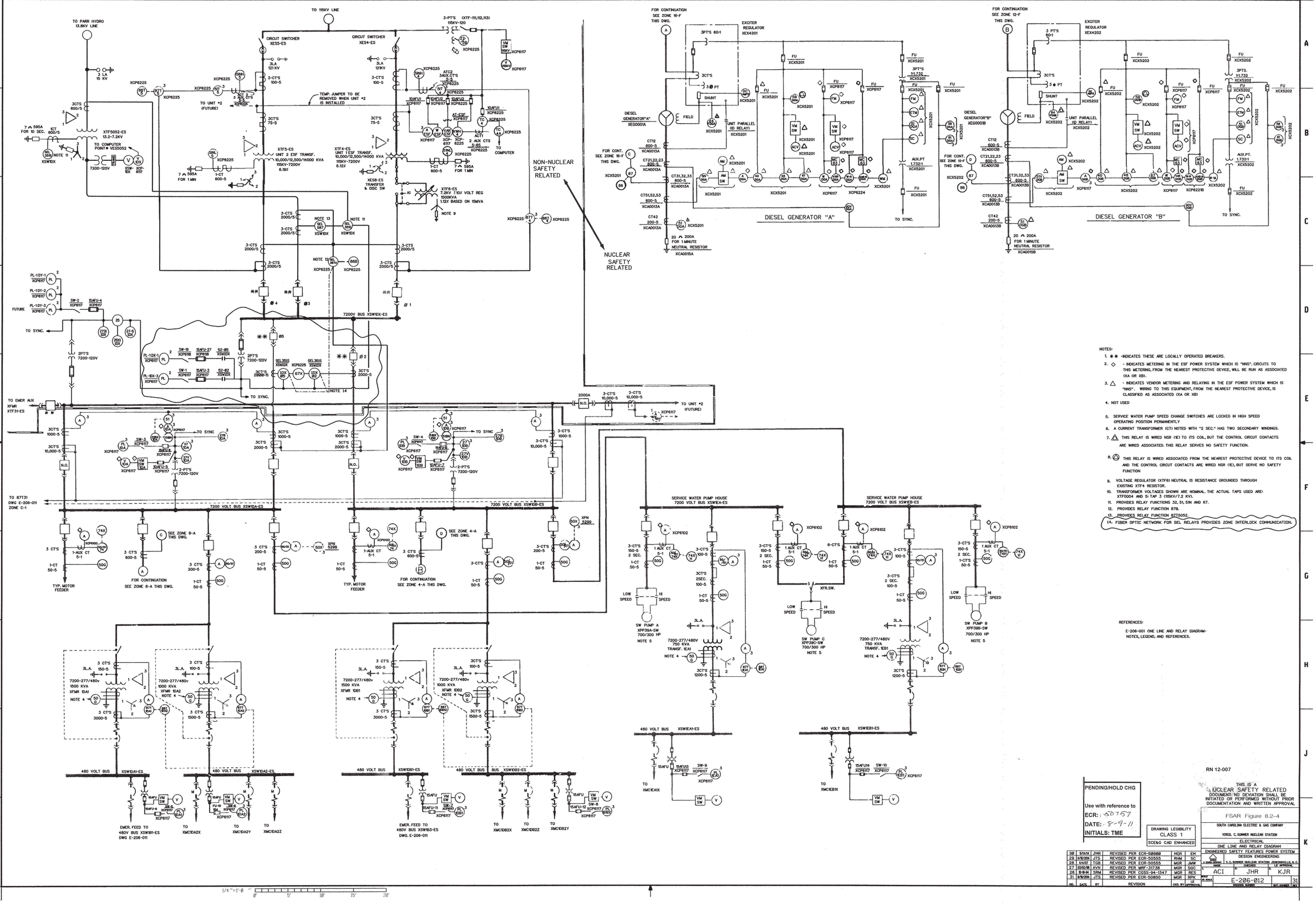

NOTES:

1. ✱✱ -INDICATES THESE ARE LOCALLY OPERATED BREAKERS.
2. ◇ - INDICATES METERING IN THE ESF POWER SYSTEM WHICH IS "NNS". CIRCUITS TO THIS METERING, FROM THE NEAREST PROTECTIVE DEVICE, WILL BE RUN AS ASSOCIATED (XA OR XB).
3. △ - INDICATES VENDOR METERING AND RELAYING IN THE ESF POWER SYSTEM WHICH IS "NNS". WIRING TO THIS EQUIPMENT, FROM THE NEAREST PROTECTIVE DEVICE, IS CLASSIFIED AS ASSOCIATED (XA OR XB)
4. NOT USED
5. SERVICE WATER PUMP SPEED CHANGE SWITCHES ARE LOCKED IN HIGH SPEED OPERATING POSITION PERMANENTLY
6. A CURRENT TRANSFORMER (CT) NOTED WITH "2 SEC." HAS TWO SECONDARY WINDINGS.
7. △ THIS RELAY IS WIRED NSR ('E') TO ITS COIL, BUT THE CONTROL CIRCUT CONTACTS ARE WIRED ASSOCIATED. THIS RELAY SERVES NO SAFETY FUNCTION.
8. △ THIS RELAY IS WIRED ASSOCIATED FROM THE NEAREST PROTECTIVE DEVICE TO ITS COIL AND THE CONTROL CIRCUT CONTACTS ARE WIRED NSR ('E'), BUT SERVE NO SAFETY FUNCTION
9. VOLTAGE REGULATOR (XTF6) NEUTRAL IS RESISTANCE GROUNDED THROUGH EXISTING XTF4 RESISTOR.
10. TRANSFORMER VOLTAGES SHOWN ARE NOMINAL. THE ACTUAL TAPS USED ARE: XTF0004 AND 5: TAP 3 (115KV/7.2 KV).
11. PROVIDES RELAY FUNCTIONS 32, 51, 51N AND 67.
12. PROVIDES RELAY FUNCTION 87B.
13. PROVIDES RELAY FUNCTION 87T5052.
14. FIBER OPTIC NETWORK FOR SEL RELAYS PROVIDES ZONE INTERLOCK COMMUNICATION.

REFERENCES:

E-206-001 ONE LINE AND RELAY DIAGRAM-NOTES, LEGEND, AND REFERENCES.

RN 12-007

PENDING/HOLD CHG

Use with reference to ECR: 52757

DATE: 8-9-11

INITIALS: TME

THIS IS A NUCLEAR SAFETY RELATED DOCUMENT. NO DEVIATION SHALL BE INITIATED OR PERFORMED WITHOUT PRIOR DOCUMENTATION AND WRITTEN APPROVAL

DRAWING LEGIBILITY CLASS 1

SCE&G CAD ENHANCED

FSAR Figure 8.2-4

SOUTH CAROLINA ELECTRIC & GAS COMPANY

VIRGIL C. SUMMER NUCLEAR STATION

ELECTRICAL

ONE LINE AND RELAY DIAGRAM

ENGINEERED SAFETY FEATURES POWER SYSTEM

DESIGN ENGINEERING

A SCANA COMPANY

P. O. BOX 88 JENKINSVILLE, S. C. 29065

V. C. SUMMER NUCLEAR STATION

DRAWN	CHECKED	LE APPROVAL
ACI	JHR	KJR

SCALE: NO SCALE

E-206-012

DRAWING NUMBER

31

REVISING DEPT.

NO.	DATE	BY	REVISION	CHD. BY	LE APPROVAL
30	5/14/01	JMR	REVISED PER ECR-58088	MGR	EM
29	4/8/2014	JTS	REVISED PER ECR-50555	RHM	SC
28	1/4/07	TGB	REVISED PER ECR-50555	MGR	JMW
27	10/07/96	AVN	REVISED PER MRF-31736	MGR	SGC
26	8-9-94	SRM	REVISED PER CGSS-94-1347	MGR	RES
31	8/8/2014	JTS	REVISED PER ECR-50800	MGR	RPK

8.3 ONSITE POWER SYSTEMS

8.3.1 A-C POWER SYSTEMS

8.3.1.1 Description

The a-c power systems consist of the various auxiliary and engineered safety features electrical systems designed to provide reliable electrical power during all modes of station operation and under shutdown conditions. The a-c power systems are shown by Figures 8.2-3 and 8.2-4. The major electrical equipment is described in Table 8.3-1. Engineered safety features (ESF) auxiliaries are arranged so that loss of a single bus, for any reason, still leaves sufficient auxiliaries to safely perform required functions. In general, auxiliaries related to functions other than engineered safety features are connected to 3 auxiliary buses. A generator circuit breaker is provided to permit isolation of the generator from the system, which eliminates the necessity for a transfer from the emergency auxiliary transformer to the normal auxiliary transformer on plant startups. Engineered safety features loads are divided between 2 additional essential system buses in observance of the single failure criteria.

Controls are provided in the control room for selected 7200 volt and 480 volt switchgear units. These units are selected to provide the operator with control of the distribution network and remote control of selected loads.

8.3.1.1.1 Plant Distribution Network

1. 7200 Volt Network

   The 7200 volt network is arranged in 5 medium voltage primary bus sections. There are 2 additional medium voltage bus sections located in the Service Water Pumphouse. Each of these 2 buses is fed as a stub bus from the related ESF primary bus. Each bus consists of a separate, metal clad type, dead front construction, rated 7.2 kV nominal (8.25 kV max) volt, 500 MVA switchgear assembly. Each circuit breaker cubicle is isolated from the adjacent cubicle by metal barriers. Interrupting ratings for the switchgear breakers are 66 kA momentary, and 41 kA symmetrical at 6.6 kV, or 37.8 kA symmetrical at 7.2 kV (based on the symmetrical rating of 33 kA at 8.25 kV). These interrupting ratings are greater than any of the fault current levels on the various buses. Control power for tripping and closing the switchgear is obtained from the station batteries.

The 7200 volt buses 1A, 1B, and 1C supply power to non-safety-related auxiliaries. Each of these 3 buses supplies power to a reactor coolant pump. The normal power source for these buses is the main generator through the unit auxiliary transformer or back feed from the 230 kV bus through the main power transformer and unit auxiliary transformer. Upon tripping of the normal feeder breaker to these bus sections, the balance of plant (non-Class 1E) electrical system is automatically transferred to the emergency auxiliary transformers which are the emergency power sources. This automatic transfer is initiated when the normal feeder is tripped by main and unit transformer lockout relaying, generator differential protection relaying, generator and main transformer backup and field failure relaying, overall backup lockout relaying, and the condition of both the main transformer breaker and the generator breaker open. There is no automatic transfer when a bus over-current condition exists. Provisions are also available for manual transfer, as required.

In addition to the protective relays discussed above, there are 3 undervoltage sensing relays (1 for each phase) and 1 underfrequency sensing relay connected for each reactor coolant pump. These devices provide the reactor coolant pump undervoltage trip signal described in Section 7.2.1.1.2, Item 4.b, and the reactor coolant pump underfrequency trip signal described in Section 7.2.1.1.2, Item 4.c. These relays, together with the potential transformers from which they receive a voltage signal, are located in the reactor protection undervoltage and underfrequency relay panel. This panel is housed in the Seismic Category 1 Intermediate Building. Power feeds to the reactor coolant pumps are routed through this panel. Therefore, the voltage signal is sensed on the pump side of the supply circuit breaker.

To satisfy the single failure criteria, the panel is constructed in 3 sections, 1 section for each of the 3 reactor coolant pump power circuits. Each section is physically isolated from adjacent sections by a double, metal side sheet barrier. Any terminal blocks or fuse blocks mounted on a barrier side sheet are mounted on a polyester glass material. Polyester glass material is also placed under any wiring on a barrier side sheet. Thus, complete isolation of power cables, potential transformers and relays for each pump is maintained within the panel. The panel has been qualified to satisfy the requirements of IEEE-323[11] and IEEE-344[12]. Electrical separation of circuits associated with the reactor protection inputs is in accordance with the criteria outlined in Section 8.3.1.4.

The 7200 volt buses 1DA and 1DB supply power to the ESF equipment. These ESF buses provide an adequate and reliable source of electrical power for safe reactor shutdown under conditions resulting from any design basis event and/or during loss of offsite power, as well as for all modes of normal station operation. The normal and preferred power source for bus 1DA is the emergency auxiliary transformer XTF-4 in conjunction with the voltage regulator XTF-6. In the event that the voltage regulator is out of service, either or both of the 2 emergency auxiliary transformers, XTF-4 and XTF-5, can be used to supply bus 1DA. When the voltage regulator is out of service, parallel operation of the 2 transformers is preferred since it provides more flexibility and a greater range of allowable offsite voltage for the 115 kV system. The normal and preferred power source for bus 1DB is also the backup power supply for 1DA. In addition to the normal power sources, each 7200 volt ESF bus has an onsite emergency power source. The AAC source ties into the same plant bus (1DX) as the ESF transformers. RN 07-001

The physical layout of the cable bus system for connecting the 2 power transformers (emergency auxiliary and safeguard transformers) and the voltage regulator or the AAC source to the 7.2 kV ESF buses is shown by Figures 8.3-0 through 8.3-0g. Figure 8.3-0b.1 shows the modifications to the bus shown in Figure 8.3-0b for the addition of the voltage regulator and its by-pass switches. Location and physical separation between redundant portions of the Class 1E distribution equipment is shown in drawings maintained in the Virgil C. Summer Nuclear Station, "Fire Protection Evaluation"[13]. RN 07-001 00-01

Each onsite power source is capable of carrying the total ESF load required for safe shutdown. The onsite standby power system consists of 2 fully equipped diesel generators which provide 7200 volt power to buses 1DA and 1DB, respectively, within 10.25 seconds after detection of a loss of the associated preferred power sources by loss of voltage relays and 13 seconds after detection of a degraded voltage condition. Buses 1DA and 1DB are provided with a manually initiated transfer to the alternate offsite power source. 99-01

Transfer switches are used to select power from 7.2 kV Channel A or Channel B sources for the C pump motors in the Service Water, Component Cooling and Safety Injection Systems. The switches are manually operated locally and are equipped with Kirk key interlock to prevent simultaneous closure of circuit breakers from both sources.

Speed switches are used to control the 2 speed, single winding motors used for the 3 component cooling water pumps.

2. 480 Volt Network

The 480 volt network distributes and controls power for all 480 volt and 120 volt a-c station demands. This network consists of 22 unit substations and 28 motor control centers. The unit substation switchgear is of metal clad, dead front construction, with 125 volt d-c operated air circuit breakers. Transformers for the 480 volt unit substations are air cooled and are directly connected to the switchgear. Except in special cases, motors rated above 50 hp to 350 hp are controlled directly by circuit breakers in the 480 volt switchgear. Motor control centers are used for control of motors 50 hp and smaller. 00-01

The maximum symmetrical interrupting capacity of the 480 volt motor control centers is 22,000 amperes. This interrupting capacity is greater than any of the fault levels on the motor control center buses. Current limiting reactors are provided in series with selected non-Class 1E motor control centers where the maximum symmetrical fault current that could otherwise occur at the motor control center would have exceeded 22,000 Amperes.

The maximum symmetrical interrupting capacity of the 480 volt unit substations is dependent upon the frame size of individual unit substation cubicles. In each case the interrupting capacity of a cubicle exceeds the maximum symmetrical fault current. Frame size rating and capacity is listed in Table 8.3-2.

a. Balance of Plant 480 Volt Network

The balance of plant 480 volt network consists of 18 unit substations and 18 motor control centers. Fifteen (15) of the unit substations are 4 wire, consisting of transformers and metal clad switchgear; 3 are 3 wire, consisting of transformers and power distribution panels. The 3 wire 480 volt unit substations provide power to the pressurizer heaters. Two (2) of these unit substations are connected to redundant safety-related (Class 1E) buses. These are loaded manually from the 7.2 Kv diesel generator buses 1DA and 1DB and furnish power to the 2 groups of heaters designated as backup groups. The third unit substation is connected to a balance-of-plant bus (1C) which powers the control group of heaters which are the normally energized heaters. Main feeder breakers for the 2 backup groups have been qualified in accordance with safety-grade equipment. Safety class heater cables and trays are protected by jet spray shields in the event of a PRT diaphragm rupture. Procedures for energizing the pressurizer heaters are addressed in Emergency Operating Procedures and System Operating Procedures as appropriate. These procedures describe (1) precautions to be observed if pressurizer heaters are to be used to prevent overloading diesel generators, (2) suggested loads to trim, (3) the time required to accomplish the connection. This time shall be consistent with the timely initiation and maintenance of natural circulation conditions. This meets the requirements of

NUREG-0578, Section 2.1.1, Position 3.1. All motor control centers are fed by 4 wire unit substations. The unit substations receive power from 7200 volt balance of plant buses 1A, 1B, and 1C through 7200 - 480/277 volt transformers. Each motor control center has a separate feed from the 480 volt unit substations. Selected motor control centers are provided with automatic transfer to an alternate power source.

b. Engineered Safety Features 480 Volt Network

The ESF 480 volt network consists of 6 unit substations and 9 motor control centers. The 480 volt ESF buses are fed through transformers with 7200 volt primaries and 480/277 volt secondaries which feed motor control centers, motors, and miscellaneous loads. These buses are independent from each other and there is neither automatic nor manual transfer capability. ESF 7200 - 480/277 volt transformers and switchgear are redundant and are located in separate areas of Seismic Category 1 structures to maintain isolation. ESF motor control centers are powered from the 480 volt ESF buses and have neither manual nor automatic transfer capability. The motor control centers are redundant and are located in separate areas of Seismic Category 1 structures or are separated by fire walls to maintain isolation. Under loss of offsite power conditions, power may be supplied to selected non-Class 1E 480 volt buses by the diesel generators. Equipment which is not safety-related but is considered essential for protection of the turbine or desired for convenience is manually activated by the operators.

The voltage fluctuates on the preferred sources within the limits defined in Table 8.2-2, as described in Section 8.2.1. Appendix 8D discusses the analytical method used for determining the optimum tap settings for the step down transformers in the plant distribution network. Also, included in the appendix is a tabulation of, or a referenced calculation for, the calculated voltages at the 7.2 kV and 480 volt distribution levels in the plant during light and accident load conditions with power being supplied from the offsite sources. The voltage fluctuation will be less than those given in Appendix 8E during diesel generator operation as the diesel's output is held to approximately + 0.5% of the voltage regulator's setting, and the regulator is set within the range of + 2%, - 5% of 7.2 kV. The light and accident condition loads were determined to be the worst case loads. The results indicate that with the design tap settings the motors terminal voltages will remain within the design limits of ± 10% of their rated voltages for the anticipated range of transmission system voltages.

RN 99-087

RN 99-007

If a degraded voltage occurs, with the established relay setting, the lowest voltage which could exist at a motor terminal is 90.0% of rated voltage (460 volts) and at a motor control center bus is 87.71% of rated voltage (480 Volts).

RN 98-061

When the plant is at the startup stage and the design tap settings have been applied to the step down transformers, the voltages on the buses will be verified to ensure that they are not out of the range for proper equipment operation. Prior to fuel loading when the loads on the distribution system reflects the values to be expected during plant operation, the voltages and loads of the ESF system buses will be measured and the data used to verify the calculation of voltage levels. Appendix 8D discusses the calculation procedures and method of this verification of the calculation. Results were provided in a March 1, 1982 letter to the NRC. As part of the results, a tolerance study will be made and presented to show that the variations between the measured and calculated values are within the expected ranges.

The voltages on the buses are monitored during plant operation and recorded as part of operator logs to verify the proper range for equipment operation. 00-01

No load break, 480 volt a-c transfer switches are used to transfer power from 480 volt channel A or channel B sources for the motors for HVAC water chiller C and chilled water pump C. These switches are equipped with a walking beam interlock to prevent simultaneous closure of circuit breakers from both sources.

8.3.1.1.2 Onsite Standby Power Supplies

The onsite standby a-c power supplies for Virgil C. Summer Nuclear Station are 2, 12 cylinder, V configuration diesel engine driven generator sets. The generators operate at 514 rpm and provide 3 phase, 60 Hz, 7200 volt power. Each diesel generator has the following ratings:

1. Continuous, 4250 kW.

2. Short time, 4676 kW.

3. Overload (2000 hour), 4548 kW.

4. Seven (7) days, 4676 kW.

5. Thirty (30) minutes, 5100 kW.

The diesel generators are located in a building designed to satisfy Seismic Category 1 requirements and to protect the diesel generators against tornadoes, hurricanes and missiles. Within this building, the diesel generators, including associated starting equipment and other auxiliaries, are completely isolated from one another by a wall designed to withstand a safe shutdown earthquake (SSE).

Each diesel generator is provided with a separate, missile protected combustion air intake as shown by Figure 1.2-13 and a separate air discharge and engine exhaust. The diesel generators, together with associated fuel storage tanks, auxiliaries and related piping are designed to remain functional during an SSE and remain in a condition suitable for the performance of their function in shutting down and maintaining the plant in a safe condition.

Essential subsystems for each of the diesel generators and the physical arrangement of these subsystems are discussed in Sections 9.5.4 through 9.5.8.

8.3.1.1.2.1 Deleted by Amendment 98-01, April 1998

8.3.1.1.2.2 Deleted by Amendment 98-01, April 1998 98-01

8.3.1.1.2.3 Deleted by Amendment 98-01, April 1998

8.3.1.1.2.4 Diesel Generator Operation

Each 7200 volt ESF bus is continually energized from either the 230 kV or the 115 kV preferred power source transformer or from the onsite emergency diesel generators, as shown by Figures 8.2-2 and 8.2-3. The transfer from preferred power source to emergency diesel generator is accomplished automatically, when required, by the opening of the preferred power source air circuit breakers and closing of the emergency diesel generator air circuit breaker. The emergency buses and power supplies for all essential components are normally connected to the preferred offsite power sources.

The emergency diesel generators are automatically started upon receipt of an undervoltage signal from the associated bus from either the loss of voltage relays or degraded voltage relays, or upon receipt of a safety injection signal. They are also started upon receipt of a manually initiated signal from the control room. Loss of voltage on an ESF bus opens the normal or alternate supply circuit breaker (whichever is closed) and, when emergency diesel generator voltage and frequency are established, closes the emergency power source circuit breaker. In the case of a safety injection signal and/or ESF bus undervoltage, the ESF loading sequencer (see Section 7.3.1 for a detailed discussion) trips selected bus loads including all non-Class 1E loads. The bus is then reloaded in the sequence shown in Table 8.3-3, Parts A1 and B1. Items indicated by 0 second loading sequence in Table 8.3-3 are not tripped and, therefore, are immediately loaded when the emergency power source circuit breaker is closed. All other required loads are loaded in sequence by the ESF loading sequencer.

The 7.2 Kv ESF buses are each provided with 3 loss of voltage relays set at approximately 81% of the nominal bus voltage level and 3 degraded voltage relays set at approximately 91.34% of the nominal bus voltage level. Operation of a set of loss of voltage or degraded voltage relays will initiate a diesel generator start, a permissive for EFW turbine pump start, an ESF load sequence operation and a permissive for diesel generator circuit breaker close. These operations occur in a timed sequence as outlined in Table 8.3-5. The logic of the controls are illustrated in Figure 8.3-0o.

As illustrated in Table 8.3-5 the 7.2 Kv bus circuit breakers are tripped 4 seconds after the diesel generator is started on a degraded voltage condition as compared to 2 seconds for a loss of voltage condition. The delay in tripping for a degraded voltage condition allows the bus to be energized during the time the diesel generator is coming up to speed. Therefore, with the degraded voltage condition, the maximum dead bus time is 6 seconds as compared to a 10.25 seconds dead bus time allowed for a loss of voltage condition.

Appendix 8F provides a discussion of the time sequence of equipment operation with a degraded voltage condition coincident with an accident condition. When the diesel generators are started and loaded as a result of an undervoltage condition, the ESF loading sequencer logic prevents further undervoltage tripping of the safety related loads. When the buses are returned to the offsite power sources, the undervoltage tripping feature is automatically reinstated.

The emergency diesel generators and normal station service are synchronized only during periodic testing. Synchronizing capability is provided to reconnect the emergency diesel generators to the offsite power network when voltage is restored subsequent to the loss of offsite power. Synchronization is performed manually, when required. ESF equipment is duplicated on separate 7200 volt and 480 volt (as appropriate) buses as listed in Table 8.3-3, Parts A1 and B1. All equipment does not start simultaneously but is programmed to start automatically in sequenced steps. The first group, indicated by 0 load sequence seconds in Table 8.3-3, Parts A1 and B1, is connected to the ESF buses when the buses are energized. During recovery from step load increase, or from disconnection of the complete load, emergency diesel generator speed change will not exceed 75% of the difference between nominal speed and the overspeed trip setpoint or 115% of nominal speed, whichever is lower. Voltage is restored to within 10% and frequency to within 2% of the nominal values in less than 40% of each load sequence time interval. This complies with Regulatory Guide 1.9 (see Appendix 3A). Subsequent groups are each connected in sequence after short time delays.

The load profile after an accident, without offsite power, is generally outlined by Table 8.3-3, Parts A1 and B1. At no time following an accident will the load exceed the short time rating (110% of the continuous rating) of the diesel generators nor is it expected that the load will fall below 30% of the diesel generator rating.

In the event of an accident with offsite power available, the diesel generators will start and run at no load. Should a subsequent loss of offsite power occur, the diesel generators would be loaded automatically. If offsite power is not subsequently lost, the diesel generators would continue to run at no load until manually stopped by the operator.

The injection phase of a loss of coolant accident should not exceed 1 hour and the short term phase of a main steam line break accident is estimated to be 2 hours. Therefore, it is expected that both diesel generators can be stopped within 4 hours after an accident if offsite power is available. If the diesel generators are operated at no load or less than 20% load for a period of time longer than 4 hours, operating procedures will require paralleling of each machine with the bus and loading the generator to at least 50% of rated load. Only 1 diesel generator will be paralleled with a bus at a time.

Criteria discussed are conservative with respect to the manufacturer's recommendations (see Colt Industries, Fairbanks Morse Engine Division, "Operating and Maintenance Manual, South Carolina Electric and Gas Co., Virgil C. Summer Nuclear Station - Unit 1, Standby Diesel Generator Set," Colt-13-206152, Chapter 1, Tab 1, page 5-1) which, in part, are as follows: 98-01

> "In the event it is necessary to operate the engine for extended periods of time (over 24 hrs.) at from no load up to 20% of the engine rating, the engine should run at above 50% load for at least 1 hour in each 24 hour period in order to minimize the accumulation of products of combustion and lubricating products in the exhaust systems. Above 20% load rating, the engine may run continuously as required with the recommendation that the engine parameters be monitored closely and logged at least daily so as to be able to discover any problems early. (Changes in exhaust temperatures are of particular interest.)" RN 98-061 98-01 RN 98-061

8.3.1.1.2.5 Diesel Generator Permissives

After the emergency diesel generator has received a starting signal, the following conditions must be satisfied before the generator is automatically connected to the ESF bus:

1. The diesel generator must be at approximately 90% of rated voltage and approximately 98% of rated frequency, based upon 2 out of 3 relaying schemes in each case.

2. The ESF bus normal and alternate power supply circuit breakers must be open.

3. There must be no electrical faults in the 7200 volt bus.

Figures 8.3-0h through 8.3-0j present diesel generator logic diagrams. Logic diagrams for the bus 1DA normal and alternate power supply circuit breakers are shown by Figures 8.3-0K and 8.3-0l. The bus 1DB normal and alternate supply circuit breakers use similar control schemes. 98-01

8.3.1.1.2.6 Diesel Generator Testing

The diesel generators are tested as follows at the manufacturer's plant prior to shipment to the plant site:

1. The diesel generators are initially started and run in accordance with the manufacturer's standard procedure which includes the following:

   a. Operation at reduced RPM for approximately 50 minutes.

   b. Operation at rated RPM and variable load for approximately 6-1/2 hours.

2. The engine overspeed setting is tested and operation at 115% overspeed is demonstrated.

3. Diesel generator starting system capacity is demonstrated.

4. Diesel generator speed governing system is tested for steady state and transient performance, including load rejection tests at 25, 50, 75, and 100% of rated load.

5. The diesel generators are started and automatically loaded with a combination of resistive and inductive loads to simulate design loading conditions for the Virgil C. Summer Nuclear Station. This test is performed 10 times on each diesel generator.

6. The ability of the diesel generators to start and accept load without service water flow and without 480 volt auxiliary power is demonstrated.

7. The starting margin of each diesel generator is demonstrated by simultaneously starting and accelerating a 1750 horsepower motor and a 500 horsepower motor with the generator carrying a resistive load of approximately 50% of rated capacity.

8. Operation of the diesel generator in parallel with a utility system is demonstrated.

9. The diesel generators are operated at variable load for a total of 11 hours, including 3 hours at 100% of rated load followed by 2 hours at 110% of rated load.

Certified evidence is supplied by the manufacturer of the diesel generators that a total of 300 start and load tests, with a maximum of 3 failures, have been performed on a diesel generator of the design supplied for Virgil C. Summer Nuclear Station.

Each start and load test consisted of starting the diesel generator and applying load within 10 seconds after the start signal, increasing load to at least 50% of the continuous rating within 30 seconds and operating under load for a minimum of 5 minutes. RN 01-113

Some of these tests are initiated from design cold ambient conditions (keep warm temperatures) and some from hot equilibrium temperature conditions.

Tests and inspections are performed to ensure that all components are properly mounted, connections are correct, circuits are continuous and components are operational. Tests are performed to ensure that emergency loads do not exceed diesel generator rating and that each diesel generator is suitable for starting and operating required loads.

Proper operation of the onsite standby power supply is tested periodically. An availability test is performed periodically when the plant is in operation. Only 1 diesel generator is tested at a given time. The test consists of a manually initiated start of the diesel generator, followed by manual synchronization with and connection to the station ESF buses and assumption of load by the diesel generators. Normal station operation is not affected by this test. The operational test, automatic starting, load shedding and loading of the diesel generators, initiated by a simulated loss of voltage on the ESF buses are performed normally during reactor shutdown for refueling. Preoperational testing according to Regulatory Guide 1.41 is discussed in Chapter 14 and Appendix 3A.

8.3.1.1.2.7 Deleted by Amendment 98-01, April 1998 98-01

8.3.1.1.2.8 Instrumentation and Control Systems

Control power required for operation of each diesel generator is supplied from the 125 volt d-c distribution system. Control power for the diesel generator breaker to the ESF bus is supplied from the 125 volt d-c distribution system associated with the corresponding ESF bus. Controls are provided locally and in the control room for manual start and stop of each diesel generator. An automatic control system is provided for automatic startup and adjustment of speed and voltage to a ready-to-load condition.

A start diesel signal overrides all other operating modes and immediately returns the controls for the diesel generator to the emergency mode except under the following conditions:

1. Engine tripped due to overspeed.

2. Engine tripped due to low lube oil pressure.

3. Generator tripped due to generator differential relay operation.

4. When maintenance is in progress.

A matrix arrangement is provided for tripping the diesel generator for low lube oil pressure. This matrix consists of 4 pressure relays set at 70, 65, 60, and 60 psi. To cause a diesel generator trip due to low lube oil pressure, 2 of the low pressure switches must be activated and at least 1 of the 2 activated switches must be 1 of the 2 with 60 psi setpoints.

The other protective functions for the diesel generator are able to cause a diesel generator trip only during testing. Under emergency conditions, these protective functions actuate alarms only and do not trip the diesel generator.

Table 8.3-3a is a list of the protective devices provided for the diesel generators. This list also includes the function of these devices under emergency start and test start conditions.

Also, the engine manual stop pushbutton cannot override an ESF signal.

Instrumentation is provided locally and in the control room to monitor diesel generator frequency, voltage, loading and circuit breaker position.

Alarms are provided locally for all critical variables and trip functions as shown in Figure 8.3-0n. The local annunciator provides "first out" indication to aid in determining the cause of any trips or malfunctions. Alarms and status indication are also provided in the control room as shown in Figure 8.3-0m to indicate diesel generator status and permit remote operation of the diesel generators.

Most of the instrumentation is designed and installed to permit inplace calibration.

Logic diagrams for the diesel generator starting and shutdown controls are presented by Figures 8.3-0h and 8.3-0i.

8.3.1.1.2.9 Diesel Generator Environment

Combustion air for the diesel generators is taken directly from the outside through an intake which is completely independent of the ventilation air intake. The bottom of the ventilation air intake is located 29 feet above grade, as shown in the Figures 1.2-13 and 1.2-14. This high elevation will minimize the amount of dust taken in by the ventilation system. In addition, all cabinets containing control relays and associated devices have gasketed doors and openings. Therefore, the ventilation system will introduce a minimum of dust into the building and the controls are protected from whatever dust does enter the building.

There are several elements which interact to assure the cleanliness of the Diesel Generator Room and the supportive electronic and electrical components contained therein. They are as follows:

1. All electrical and electric component cabinets are weather sealed with rubber gaskets and have filtering media provided where air is circulated through the cabinets.

2. The Diesel Generator Building is to be designated as a Cleanliness Zone IV, which requires periodic inspections, specifically for cleanliness. 99-01

3. The mandatory surveillances for assuring the diesel's ability to start are supported by a periodic preventive maintenance task which requires inspection of the electrical and electronic components to determine operability and condition. Cleanliness is one of the areas that is inspected during the performance of the preventive maintenance task. 00-01

8.3.1.1.3 120 Volt A-C Vital Bus System

Six (6) 120 volt a-c vital buses are provided. Each of 4 buses is supplied by 1 of 4 single phase static inverters. The normal feed to Panel APN5907 is from APN5901. The normal feed to Panel APN5908 is from APN 5903.

One (1) Channel A and 1 Channel D inverters are connected to ESF battery 1A, and 1 Channel B and 1 Channel E inverters are connected to ESF battery 1B.

The 120 volt a-c vital buses constitute a reliable electrical system which provides a stable power supply to vital equipment and guarantees proper action when power is required while eliminating spurious shutdowns. Controls for the backup groups of heaters, the pressurizer level transmitters and for the pressurizer relief block valve operators receive their power from this vital a-c bus source through the emergency power buses. The control power for the block valves is supplied from an emergency power bus different from that which supplies the associated PORV. Safety grade circuit breakers and fuses are used for circuit protection.

The normal source of power for the 120 volt a-c vital bus inverters is through the inverter static rectifier. These inverter rectifiers are fed from 480 volt buses 1DA2 and 1DB2. The station batteries and battery chargers constitute the standby power source. The battery chargers are fed from 480 volt buses 1DA2 and 1DB2. In the event of loss of 480 volt power, the power source for the vital bus inverters is the station batteries. These batteries are floating, on standby service. The change in power source, from normal to standby, occurs without exceeding the stated inverter output voltage and frequency regulation. The station batteries are sized to carry this additional inverter load without being charged for no less than 4 hours. The battery chargers are sized to recharge from a design minimum charge to full charge in 12 hours while carrying the largest combined demand from the various steady-state loads. 99-01

An alternate power supply for the 120 volt a-c vital buses is provided through 480-120 volt transformers from 480 volt buses 1DA2 and 1DB2 for use when the inverters are out of service.

8.3.1.1.4 Equipment Criteria

1. Motor Size

   The criterion for motor size is that the motor develops sufficient horsepower to drive the mechanical load under maximum expected flow and pressure. Motors are sized to permit the driven equipment to develop its specified capacity without exceeding the temperature rise rating of the motor when operated at the duty cycle of the driven equipment. Motors are furnished with service factors ranging from 1.0 to 1.15. The service factor is a ratio of the safe load to the nameplate load and identifies the margin available for motor operation under overload conditions. When a motor is furnished with a service factor greater than 1.0, it is the design intent to size the motor to handle the normal operating requirements of the driven equipment without taking credit for the service factor. Motor size is determined based on the driven equipment load characteristics. RN 99-002

2. Engineered Safety Features Motor Starting Torque

   Motors are designed for across the line starting. ESF motors rated 6900 volts are capable of accelerating the driven equipment to rated speed at 70% of the motor nameplate voltage. ESF motors rated 460 volts are capable of accelerating the driven equipment to rated speed at 80% of rated voltage. The motors are designed to operate at ± 10% of rated voltage, ± 5% of rated frequency or a combined variation in voltage and frequency of ± 10% of absolute values, provided that frequency variation does not exceed ± 5% of rated frequency. RN 01-113

Calculations based on the diesel generator factory test data indicate that the motor terminal voltage during starting will not go below 90% of the rated voltage for 6,900 volt motors or below 82% for 460 volt motors. The motor terminal voltage for the 6900 volt motors was calculated using the diesel generator voltage regulation for starting of a 1750 Hp motor. The motor terminal voltage for the 460 volt motors was calculated using the diesel generator voltage regulation for starting a 500 Hp motor and considering the voltage drop through the 7200/480 volt transformers. The actual largest system motors are 900 Hp and 350 Hp for the 7200 volt and 480 volt systems respectively (Refer to Appendix 8E). These voltage levels are well above those allowed by Regulatory Guide 1.9. The adequacy of bus voltage regulation during motor starting is confirmed during the preoperational testing program. 00-01 00-01

3. Motor Insulation

   Motor insulation is a minimum of Class B outside the Reactor Building and Class F inside the Reactor Building. The insulation temperature rating is greater than the sum of the motor temperature rise and the ambient temperature at the motor location.

   Service life is extended when necessary by 1, or a combination, of the following methods:

   a. Derating - use of a larger motor than required by the motor sizing criteria previously discussed.

   b. Insulation type - use of motor insulation with a higher temperature limit than specified for the operating conditions (e.g., specifying Class F insulation to Class B temperature limitations).

   c. Service factor - motors with 1.15 service factor are operated under normal conditions without encroaching upon the service factor.

4. Engineered Safety Features Motor Temperature Protection

   ESF motors rated 6900 volts and 600 hp and larger are provided with 6 stator winding embedded, resistance type, 10 ohm, copper at 25°C, resistance temperature detectors (RTDs). Smaller horsepower motors are not equipped with stator RTDs due to the problems involved in embedding them in the stator. The exceptions are the 400 hp reactor building spray pump motors which do have stator RTDs. 00-01

Motors rated 6900 volts and selected 460 volt motors are provided with bearing thermocouples. Outputs from each of the 2 motor temperature measuring devices are routed to the plant computer which actuates an alarm and provides a printed output if the stator RTD or bearing thermocouple measured value exceeds a predetermined setpoint.

5. Interrupting Capacity

Switchgear, unit substations, motor control centers and distribution panels are sized for interrupting capacity greater than the maximum short circuit availability at their location. The calculations to document this application take into account the fault contributions of all rotating machines and source transformers. Source impedances are selected to ensure adequate starting voltage for all motors and to limit short circuit currents at unit substation buses and motor control center buses.

6. Network Protection

Each major motor or other major item of electrical equipment is protected by overcurrent relays that disconnect the equipment if the load current becomes excessive. Prior to plant operation protective relays are set and calibrated. Availability and proper operation of standby equipment are periodically tested during normal operation.

The protection philosophy for the 7200 volt and 480 volt systems is based upon the following considerations:

a. A faulted piece of equipment is cleared by isolating the smallest possible portion of the system.

b. A faulted piece of equipment is cleared in the minimum possible time to reduce damage to that equipment and limit the stress on the remainder of the system.

c. Protective devices are selected and set for fault sensing and overload sensing as required for applicable system/component protection.

RN 99-002

d. Motor control centers that serve loads located inside the Reactor Building typically have starters, (with thermal overloads) magnetic molded case circuit breakers, and a current limiting circuit breaker in series. The current limiting circuit breakers have thermal and magnetic elements incorporated in their protection circuit. Loads that do not require a starter, that use a contactor without overload protection, or have overloads bypassed under accident conditions, or are mentioned in Section 8.3.1.4.1; have an additional thermal element provided in the molded case circuit breaker. This arrangement provides primary and backup protection in compliance with Regulatory Guide 1.63 (see Appendix 3A).

e. Overload elements provided for safety-related valve operators are bypassed under accident conditions by the safety injection signal contact that initiates the valve operation. This is in compliance with Regulatory Guide 1.106 (see Appendix 3A).

7. Grounding Requirements

Design criteria for grounding of safety-related systems are as follows:

a. All equipment hardware, exposed surfaces and potential induced voltage hazards are adequately grounded to assure that no danger to plant personnel exists.

b. A low impedance ground return path is provided to facilitate the operation of ground fault detection or protective devices in the event of ground fault or insulation failure on any electrical load or circuit.

The following are the methods for grounding electrical equipment:

a. A ground wire is connected to the equipment frame and the ground grid. The ground wire is run through the equipment conduit or lashed to the power cable for the equipment where no conduit is provided. The wire is either connected directly to the ground grid or to other equipment, such as a cable tray which is connected to the grounding grid.

b. Where conduit is used as the grounding path, the conduit is connected to the equipment and the grounding grid. The connection to the grounding grid is either a direct connection or is connected to other equipment such as a cable tray which is connected to the grounding grid.

The cable tray system is solidly grounded. Ground connections are made to the station grounding grid or building steel work, which is connected to the station grounding grid.

The station grounding grid is designed to maintain the station area at an effective ground potential during a worst case ground fault in any installed electrical equipment, including transmission facilities and unit main generators, as well as lightning effects. An effective ground is considered to be the maintenance of voltage potentials below a "safe touch" level for plant personnel.

8. Maintenance Program

A maintenance program, in accordance with the recommendations of the manufacturers, is followed. This program includes periodic visual inspection and lubrication for each motor. A record is maintained for each motor indicating the date when each action is performed.

9. Starter Voltages

Starter coils for motor control centers are designed to pull in at 85% of rated voltage and to hold in at 65% of rated voltage. The coils are energized through a 480/120 volt instrument transformer.

10. Heat tracing is provided for Nuclear Safety Related and Non-Nuclear Safety Related equipment, piping, and/or tubing for the purpose of process temperature maintenance and freeze protection of liquids and for prevention of condensation in instrument air lines.

The heat tracing equipment protecting Safety Related systems (i.e., reactor makeup water storage tank and piping, refueling water storage tank and piping, and sodium hydroxide) includes redundant centralized control panels, temperature measuring equipment, wiring and conduit, and heat tracing cables, except for the refueling water storage tank and reactor makeup water storage tank. These tanks are monitored by redundant temperature instrumentation and are provided with 1 set of heat tracing each. Based upon the thermal capacity and insulated design of these tanks, the redundant instrumentation provides adequate operator control to prevent freezing. The centralized control panels provide power distribution, control and alarm functions from signals received from temperature measuring equipment attached to the piping systems. The primary and redundant heat trace circuits are each designed with the capability to provide the necessary freeze protection, or maintain the necessary process temperature. In the event of a failure to the primary heat trace circuit, the redundant heat trace circuit provides the necessary heat trace function. The heat tracing cables are of the parallel self-limiting type. The centralized control panels are powered from Class 1E Channel A and Channel B motor control centers. Alarms are transmitted to the control room from a local annunciator panel. 00-01 00-01

8.3.1.2 Analysis

8.3.1.2.1 Compliance Analysis

The basic design criteria are that the Class 1E electric power systems satisfy the single failure criterion and Regulatory Guide 1.32 (see Appendix 3A). The safety-related loads are assigned to 2 independent, separate 7200 volt ESF buses. Either of these buses is capable of supplying required ESF or shutdown loads. Each of these buses is continuously energized from the preferred source ESF transformer(s), 1 set of windings in emergency auxiliary transformer (XTF-31), or from 1 of the diesel generators. Each 7200 volt ESF bus serves as a power source for the safety-related loads on the 480 volt buses and for equipment which is not safety-related but is considered essential for protection of the turbine or desired for convenience. This design, including the ties to the non-ESF buses, satisfies the independence and redundancy requirements of Regulatory Guide 1.6 (see Appendix 3A) and General Design Criterion 17.

The main control board is provided with indicators to monitor the ESF bus operating levels. A voltmeter, ammeter, wattmeter, varmeter and kilowatt hour meter are provided on each of the incoming, preferred power sources. The onsite power source has a voltmeter, frequency meter, wattmeter and ammeter provided on the main control board to indicate the ESF bus operating levels. Figures 8.2-3 and 8.2-4 indicate the metering provided on the plant electrical system. Table 8.3-3b is a listing of the indicator types associated with the ESF electrical network.

The ESF buses have sufficient redundancy to allow testing of each safety-related item as a system, or in some cases as individual components to comply with General Design Criteria 17 and 18.

Two (2) diesel generators provide onsite power to the 7200 volt ESF buses. Each diesel generator is assigned exclusively to 1 bus and each is automatically started upon a loss of bus voltage, degradation of bus voltage or receipt of a safety injection actuation signal. Under conditions outlined in Section 7.3.1, normal loads, with the exception of the group indicated by 0 seconds in Table 8.3-3 Parts A1 and B1, are disconnected and the ESF loads are automatically loaded in sequence on each diesel generator in accordance with the sequence presented in Table 8.3-3. 98-01

If a loss of preferred power is not concurrent with a postulated accident, certain ESF equipment is not required. Under these conditions, other plant auxiliary equipment may be manually operated. Safety injection loads are sequenced on by the load sequencer in this case, but loads are not disconnected prior to the sequencing. Instrumentation is provided to indicate emergency diesel generator loading.

The onsite standby power supply complies with Regulatory Guide 1.9, including load limits, (see Appendix 3A). The diesel generators have a continuous rating of 4250 kw, a short time rating of 4676 kw for up to 7 days, and a 30 minute rating of 5100 kw. The limiting accident load is calculated to be 4390 kw and the maximum load under loss of offsite power conditions is calculated to be 4920 kw. These short time and continuous rating loads are verified by test during each refueling outage. (The largest bus connected load is calculated to be approximately 5450 kVA.) 99-01

8.3.1.2.2 Hostile Environments

8.3.1.2.2.1 Equipment Identification

The most severe environmental conditions expected to be imposed upon the equipment which would operate inside and outside the Reactor Building during normal operation and subsequent to a LOCA or main steam line break are presented in Section 3.11. Regulatory Guide 1.89 is discussed in Appendix 3A.

8.3.1.2.2.2 Loss of Ventilation

To ensure that loss of the air conditioning and/or ventilation systems does not adversely affect the operability of safety-related control and electrical equipment located throughout the plant, the environmental systems for these areas satisfy the single failure criterion. Section 9.4 presents a detailed discussion of ventilation systems. Section 3.11.4 discusses loss of ventilation.

8.3.1.2.2.3 Qualification Tests

See Section 3.11 for a discussion of the hostile environment for which electrical equipment is procured and the maximum DBA environmental conditions to which it may be subjected.

8.3.1.3 Conformance with Appropriate Quality Assurance Standards

The quality assurance procedures used during equipment design, fabrication, shipment, field storage, field installation and system and component checkout and the records pertaining to each of these during the construction and preoperational test phases are described in Chapter 17.

The Quality Assurance Program, as discussed in Chapter 17, is in conformance with IEEE-336[1].

8.3.1.4 Independence of Redundant Systems

8.3.1.4.1 Criteria for Independence of Redundant Electric Systems

The electrical power supply, control and instrument cables for mutually redundant equipment are physically separated to preserve the redundancy and to ensure that no single, credible event will prevent operation of the associated function because of electrical conductor damage. Critical circuits and functions include power, control and instrumentation associated with reactor protection, ESF and reactor shutdown. Credible events include, but are not limited to, the effects of short circuits, pipe ruptures, fires, earthquakes, and missiles. The minimum electrical separation required for protection against design basis accidents is included in the basic plant design.

The separation of electrical circuits has been reviewed to the criteria of IEEE 384[14] as modified by Regulatory Guide 1.75 (see Appendix 3A). The plant design complies with these criteria as described below: 00-01

1. Redundant Class 1E circuits are run in separate and independent raceways. In general plant areas, not subject to hazards, such as missiles, open ventilated cable trays for redundant circuits are separated by a minimum of 3 feet horizontally or 5 feet vertically. In cable spreading rooms open ventilated cable trays are separated by a minimum of 1 foot horizontally or 3 feet vertically. Totally enclosed raceways for redundant circuits are separated by a minimum of 1 inch. Where these separation criteria cannot be satisfied, suitable barriers are placed between the raceways. The design of these barriers is described in Appendix 8B.

2. In areas where redundant circuits are exposed to hazards, such as missiles, the minimum spacing between mutually redundant wireways is 20 feet. Where this spacing cannot be achieved, a suitable missile proof barrier is used to ensure that no common hazard could render more than 1 mutually redundant circuit inoperative. Barriers have been provided to protect trays for Class 1E circuits from the effects of jet impingement and piping is restrained to prevent pipe whip as described in Section 3.6.

3. Where non-Class 1E circuits are connected to Class 1E equipment or are routed in the same raceways with Class 1E circuits, they are designated as associated circuits. Circuits designated as associated are routed with the designated separation channel throughout their length. Where non-Class 1E circuits are connected to Class 1E equipment, an isolation device is provided to protect the Class 1E equipment. These isolation devices are further discussed in Appendix 3A under the discussion of Regulatory Guide 1.75.

4. Non-Class 1E circuits are routed in raceways independent from the raceways for Class 1E circuits. Where the separation between the raceways for non-Class 1E circuits and raceways for Class 1E circuits do not satisfy the criteria for raceways carrying redundant Class 1E circuits, as described in Item 1, above, a case by case analysis has been performed to ensure that adequate separation exists. This analysis reviewed 2 types of violations, single and multiple. Single violations are those in which a non-1E tray violates the minimum separation required at one point along its path. These cases are summarized in Appendix 8C. A multiple violation is defined as a non-Class 1E tray which violates the minimum separation required at 1 point, and then, within the same fire area, the same non-Class 1E tray violates another Class 1E tray which is of a redundant channel to the initial 1E tray. For identified multiple violations in control (4000 series) trays, tray covers have been provided between the non-Class 1E tray and one of the Class 1E trays. The remaining violation is then analyzed as a single violation (Appendix 8C). For power trays (1000, 2000 and 3000 series) which cannot be covered, periodic testing of certain cable protective devices is performed in accordance with a controlled breaker surveillance program. This testing ensures that adequate overcurrent protection exists for the cables in the non-Class 1E trays so that they cannot be a hazard to the Class 1E trays whose separation distance has been violated. The results of the analysis for identified multiple violations are summarized in the Fire Barriers Raceway Database.

RN 03-018

   All 5000 series instrument trays are deemed as acceptable barriers for multiple violations without the use of top hats, Kaowool, or any other fire related enhancements. Because of this, multiple violations in which 1 or more of the trays involved were 5000 series were classified as single or no violations as appropriate.

5. The Class 1E circuits routed to the service water intake structure are installed in underground concrete duct banks. These duct banks are seismic Category 1 structures and, as such, are designed to protect the cables from postulated natural phenomena, including SSE. The layout of the duct banks and associated manholes is illustrated by Figures 8.3-2a through 8.3-2g.

6. Separation of safety-related circuits is maintained in the electrical penetrations of the Reactor Building. Circuits for nuclear and protection instrumentation are not mixed with other type circuits in the same penetration. The redundant circuits for the 4 nuclear and protection instrumentation channels enter containment through penetrations located around the periphery with a minimum horizontal separation of 20 feet, centerline to centerline, between any 2 channels (see Figure 8.3-3). Physical separation between penetrations containing redundant circuits, other than the 4 nuclear instrument channels, is maintained in accordance with Section 8.3.1.4.3, Item 2.

The 4 penetrations containing the nuclear and protection instrumentation are provided with metal barriers. The metal barriers are used to separate the nuclear and protection instrumentation.

These barriers are grounded and are arranged to provide an effective electromagnetic shield over the full length of the penetration assembly.

Structural criteria require that penetrations be spaced on minimum horizontal and vertical centerlines as shown by Figure 8.3-3. This provides a 3 foot minimum separation between any electrical penetration and any other type of penetration. The design objective is to maintain maximum separation between safety related electrical penetrations and any large piping penetrations to minimize mechanical damage from the postulated rupture of steam or water lines. The design objective is also to maintain maximum separation between any safety-related penetrations and large power penetrations, such as those for reactor coolant pump or pressurizer heater power cables. Separation of safety-related electrical penetrations from main steam lines is maintained by a concrete floor or a minimum horizontal distance of 40 feet. One (1) exception is the penetrations for the power feeds to the Channel A Reactor Building cooling unit fans. The main steam lines and cooling unit fan power feeds both penetrate the Reactor Building above the operating floor. A 20 foot minimum separation is maintained between these penetrations. Separation from any other steam, high pressure water or large power electrical penetration is maintained by a concrete floor or by an 8 foot minimum horizontal centerline separation.

7. Cable trays, conduits and cables are marked for ready identification of the channel and to guard against violation of separation. Specific color coding is discussed in Section 8.3.1.5.

8. S-200-926, "Construction Guideline for Electrical Circuit Physical Separation," and Electrical Maintenance Procedure EMP-405.012, "Guide for Electrical Physical Separation," identity the minimum separation guidelines for internal wiring and components within control boards, panels, relay racks, etc. A minimum separation distance of 6 inches between redundant components and/or wiring and between Class 1E and non-Class 1E components and/or wiring within the enclosures is required. Where 6 inches of air separation is not available, a suitable fire barrier is installed or an analysis is performed to demonstrate that the separation distance is adequate. Design exceptions to the separation guidelines are addressed in Attachment 1 to S-200-926.

RN 99-002

8.3.1.4.2 Compliance with Criteria for Independence of Redundant Electric Systems

A discussion of the administrative responsibility and control provided to ensure compliance with the criteria, set forth in Section 8.3.1.4.1, during design and installation is presented in Chapter 17.

8.3.1.4.3 Criteria for Design and Installation of Electrical Cable

The recommendations of IEEE Proposed Guide P-422,[3] IEEE STD 384,[14] and Regulatory Guide 1.75 (see Appendix A) are used, except as modified by Items 1 through 6, below, as the general design criteria for the design of the power, control and instrument cable and cable tray systems related to all Class 1E electrical systems. 00-01

1. Power cable capacities are determined using derating factors listed in IPCEA P-46-426,[4] supplemented by IPCEA-NEMA P54-440.[5] Cable derating and cable tray fill are discussed in Section 8.3.3.1.

2. Cable routing in the Reactor Building, penetration areas, cable spreading room, control room, etc., is arranged following the recommendations in IEEE Proposed Guide P-422.[3] Channel separation and cable tray physical separation requirements are maintained in these areas in accordance with Section 8.3.1.4.1, item 6. Cables which must enter areas surrounded by shield walls are routed to minimize the cable length within the shields area.

3. Fire and/or smoke detection equipment is installed in areas of heavy cable concentration, as recommended by IEEE Proposed Guide P-422.[3] Fire stops are provided at cable tray penetrations through floors and fire barrier walls.

4. An exception is taken to IEEE Proposed Guide P-422[3] recommendations for 30% cable tray fill. Experience has indicated that a design objective of 50% physical fill, including all anticipated future cables, is satisfactory. This fill calculation is based upon the summation of the cable diameter squared divided by the cross-sectional area in the tray. The tables referred to in Item 1, above, are used as the basis for ampacity rating. The allowable depth is determined from the physical fill calculations outlined above and in Section 8.3.3.1.

5. The design objective for the minimum physical vertical spacing between the power, control and instrument cable trays of the same redundant channel is 12 inches, measured from the top of the lower tray to the bottom of the upper tray and a 9 inch clearance between the top of a tray and beams, piping, etc., to facilitate installation of cables in the tray. However, in areas where physical limitations govern, the physical separation may be less than the 12 inches and 9 inches, respectively.

6. The same basic design considerations are incorporated for tray and conduit supports as for the structures to which they are attached. Therefore, the same supports can be used for redundant raceways or for a redundant and non-safety raceway.

8.3.1.5 Physical Identification of Safety-Related Equipment

Identification of cable and raceways is readily apparent in the design and installation stages and is such that any safety-related cable can be readily identified. Raceways and cables (particularly for redundant systems) are adequately identified to prevent violation of separation criteria. Channel identification for safety-related and associated circuits is based upon the 4 reactor protection process control channel colors: red, orange, blue, and yellow. In addition, green is used for C train and tan is used for non-safety-related circuits. Cable trays and cables for these circuits, as well as for power, control and instrumentation circuits for ESF Channels A and B are identified relative to the 6 colors as indicated in Table 8.3-4. 00-01

Cable identification is as follows:

1. Color coding

   Cables are marked at 5 foot intervals. The circumference of the cable is marked such that the marking is visible no matter how the cable is turned.

2. Tagging

   Tags are placed at each end of the cable. These tags are marked to indicate the circuit and channel. Any nonengineered safety feature cables in a safety-related tray are marked to distinguish them from the safety-related cables.

3. Conduits

   Conduits are marked with identification markers. Color coding is done with colored tape at 15 foot intervals. Tags for embedded conduit are attached to the concrete above the conduit.

4. Cable Trays

   Cable trays for safety-related cables are identified with tags. The color coded tags are located on the trays so they are visible from easily accessible vantage points, such as walkways, etc.

5. Equipment Identification

   Each piece of equipment has an identification (ID) tag attached which identifies the equipment. Channel designation for safety related and associated equipment is identified by a strip of color coded tape.

   Tags mounted on equipment inside the Reactor Building are of stainless steel and have the required information engraved. Where there is not room to mount the tag to the equipment, it will be attached by wire. In these cases, the color coded tape will be attached to the back of the tag. Stainless steel ID tags are also used outside the Reactor Building. Tags for associated equipment have 2 colors.

8.3.1.6 Electrical Penetration Areas

Electrical penetration areas are located as follows:

1. Fuel Handling Building penetration area (penetration access area - North). Number of penetrations is 7. | 00-01

2. Intermediate Building penetration area (penetration access area - East). Number of penetrations is 5.

3. Intermediate and Auxiliary Building penetration area (penetration access area - West). Number of penetrations is 33. | 00-01

No special designations have been assigned areas where penetrations enter the Reactor Building.

Redundant circuits are spatially separated by 40 feet or a concrete floor, except for nuclear instrumentation penetrations, which are spatially separated by 20 feet.

Provisions for fire detection and protection in the penetration access areas consist of the following:

1. An early warning fire detection system comprised of smoke detectors. | RN 96-041

2. A fire hose/standpipe system.

3. Manual fire extinguishers.

Protection to ensure that missiles inside the Reactor Building will not jeopardize plant safety are discussed in Section 3.5.1.

All containment penetration seal assemblies are protected against major incidents, such as missiles and rupture of high energy piping. Additionally safety related penetrations are protected on both sides of the nozzle. Therefore, based upon good design practice, a separation of 3 feet from other penetrations, the failure of which could inflict only minor or insignificant damage to an electrical penetration, was provided.

8.3.2 D-C POWER SYSTEMS

8.3.2.1 Description

Separate Class 1E and non-Class 1E d-c power systems are provided. Two (2) Class 1E 125 volt d-c systems provide sources of reliable, uninterruptible d-c power for control and instrumentation for normal operation and orderly shutdown of ESF equipment. A separate non-Class 1E 125 volt d-c system is provided to supply non-ESF d-c loads, including large power non-ESF loads. This system is also a manually switched backup d-c source for the Substation Relay House d-c system. The 125 volt d-c battery systems, located in the Substation Relay House and in the Unit 1 Relay House, are provided for 230 kV substation protection and control. These systems are shown in Figures 8.3-1, 8.3-2, 8.3-4, 8.3-5 and 8.3-5a. RN 14-013

The Class 1E d-c system for control and instrumentation consists of 2 full capacity, 125 volt d-c, lead calcium, 60 cell batteries, 2 125 volt d-c battery buses and 3 static battery chargers. Two (2) of the 3 battery chargers are supplied from separate, redundant motor control centers. One (1) of these 3 chargers serves as a standby charger and is provided for use during maintenance of, and to backup, either of the normal power supply chargers. The standby battery charger, 1A-1B, is provided with a set of 2 transfer switches which consist of mechanically interlocked circuit breakers on the a-c input and d-c output. These circuit breakers, as shown by Figures 8.3-6 and 8.3-7, are interlocked to allow only the 2 breakers associated with Channel A or the 2 breakers associated with Channel B to close at the same time. The battery chargers remain connected to the respective a-c source buses upon loss of offsite power. Each battery charger is protected by the molded case circuit breakers in the input and output circuits. The d-c circuit has a voltage adjustment of 100 to 145 volts d-c. During an equalizing charge, d-c voltage may be set at 140 volts. All Class 1E d-c loads can operate at 140 volts d-c without damage. An overvoltage alarm is provided to annunciate in the control room upon detection of voltages greater than 140 volts d-c.

The non-Class 1E 230 kV Substation d-c systems provided for the 230 kV substation control and relaying consists of the following:

1. For the Substation Relay House, the d-c system consists of a 125 volt battery with a main battery bus, two battery changers and two separate distribution panels for 230 kV circuit breaker tripping. Backup for non-1E loads is also provided by this system. RN 14-013

2. For the Unit 1 Relay House, the d-c system consists of two independent d-c systems. Each system is comprised of a 125 volt battery with two distribution panels, a battery charger and common bus-tie fuse-disconnect switch. One d-c system supplies the 230 kV substation system primary protection and control. The second d-c system supplies backup protection and control. Other 230 kV substation systems and relay house d-c loads and can be supplied from either d-c system. RN 14-013

The second non-Class 1E d-c system provided for the 230 kV substation control and relaying in the substation relay house consists of a 125 volt battery with a battery bus, 2 static battery chargers and 2 separate distribution panels for power circuit breaker tripping. Backup for large power non-ESF loads is also provided by the system. RN 12-001 00-01

The non-Class 1E d-c system in the Unit 1 relay house consists of two 125 volt d-c batteries, each with its battery charger, feeding 2 separate distribution panels for power circuit breaker tripping. RN 12-001

The non-Class 1E battery has adequate storage capacity to power the following loads for a period of 1 hour:

1. Main generator emergency seal oil pump.

2. Circuit breaker closing and tripping (non-ESF buses).

3. Miscellaneous non-ESF loads.

4. Non-ESF instrumentation inverter and computer inverter.

5. D-C turbine bearing oil pump.

6. Feedwater pump d-c oil pump (3 pumps).

7. Reactor and Diesel Generator Building emergency panels.

A 1 hour period is considered to be the minimum time for use in sizing the batteries. Complete loss of offsite and onsite a-c power for such a period of time is considered highly unlikely. Loss of both diesel generators during an assumed prolonged loss of offsite power is not postulated nor is complete loss of all battery chargers postulated. Battery chargers are considered to be available to sustain the bulk of the battery loads well within the 1 hour period of time.

The non-Class 1E battery supplying power to the d-c turbine bearing oil pumps is of sufficient capacity to power the pumps during turbine coastdown to avoid turbine bearing damage.

Battery capacity in addition to that which is absolutely essential is provided.

8.3.2.1.1 Uninterruptible Non-Class 1E System

The uninterruptible non-Class 1E 125 volt d-c system is an ungrounded system. The system is operated ungrounded with the battery floating on the system. Dual input inverter No. 5 (450 volt a-c normal input, 125 volt d-c backup input) provides uninterruptible 120 volt a-c power for the AMSAC system, secondary plant digital control systems, the station computer and other non-Class 1E loads. No Class 1E loads are supplied from this system.

The dual input inverter No. 5 provides continuous power to non-Class 1E 120 volt vital secondary digital control system and computer loads. Transfer from one input to the other is accomplished without interruption to the load. The inverter is protected by circuit breakers on the 480 volt a-c input side and the 125 volt d-c input side. Abnormal conditions in the dual input inverter cause alarms to occur in the control room.

00-01

The output of inverter No. 5 is connected to a distribution panel through an automatic static transfer switch. An alternate backup 480-120 volt transformer non-Class 1E power source is provided through the automatic static transfer switch. The feed to the transformer is from a 480 volt motor control center as indicated by Figures 8.3-4 and 8.3-4b.

All metering and monitoring is performed by a digital control system that includes a microprocessor. The operation of the microprocessor has no impact on the ability of inverter No. 5 to perform its function.

Inverter No. 6 is also powered from the non-Class 1E 125 volt d-c bus. A static switch is provided on the output of this inverter to switch the feed to the inverter distribution panel from the inverter output to a 120 volt ac supply upon detection of loss of inverter output.

8.3.2.1.2 Uninterruptible Class 1E Systems

Each uninterruptible Class 1E system contains a separate 125 volt d-c and 120 volt ac system.

The 125 volt d-c system is a 2 wire, ungrounded system centered around a full capacity 125 volt, lead calcium battery, 125 volt d-c main distribution panel and solid state battery chargers. Figures 8.3-2aa and 8.3-2ab show connection of the battery, battery charger and main distribution panel of each redundant Class 1E power system. No ties are provided between the redundant Class 1E 125 volt d-c systems. All non-Class 1E loads connected to the Class 1E d-c system are identified by Figure 8.3-1 (see Note 4, Figure 8.3-1). Connection of non-Class 1E loads to the Class 1E d-c system is discussed in the statement concerning Regulatory Guide 1.75 in Appendix 3A.

Eight (8) separate 125 volt d-c distribution panels including the 2 main distribution panels are provided. Each panel provides d-c instrumentation and control power as necessary for proper functioning of the plant.

The battery, battery charger and main distribution panel of each system are located in protected areas of the Intermediate Building, separate from the location of redundant channel equipment. The protected areas are separated by a fire resistant barrier. The inverters and other distribution panels are also located in protected areas.

Each ESF battery has a rated capacity of 2175 ampere hours (with an 8 hour discharge cycle to 1.75 volts per cell). This capacity is sufficient to power essential loads and normally connected non-essential loads for a 4 hour duty cycle following loss of all a-c power. The 4 hour duty cycle is based on coping requirements for Station Blackout[15] defined by NUMARC 87-00[17] and endorsed by NRC Regulatory Guide 1.155[16]. The 4 hour duty cycle with loss of all a-c power envelopes the previous 2 hour duty cycle based on a LOCA in conjunction with the loss of all a-c. The 2 hour duty cycle represents standard industry practice for sizing batteries for generating stations and does not reflect V. C. Summer design basis requirements for demonstrating d-c system operability. Essential loads include the following:

1. Instrumentation inverters - with ESF and non-ESF loads.

2. Engineered safety features control.

3. Diesel generator control and field flashing.

4. Circuit breaker closing and tripping (ESF buses).

5. Controls and alarms, including Auxiliary Relay Racks, Isolator Cabinets, Main Control Boards, HVAC Boards and Control Room Annunciators.

6. Control Room emergency lighting.

During normal operation, the 125 volt d-c load is supplied from the battery chargers with the batteries floating on the system. Upon loss of station a-c power, the entire d-c load is supplied from the batteries until the a-c power to the chargers is restored by the emergency diesel generator or the preferred power source. The function of the battery is to provide sufficient stored energy to operate necessary d-c loads for as long as each load is required during the loss of a-c power. The time duration for the loss of a-c power is the time required for the diesel generator to start and accept load. For the V. C. Summer Station, the diesel generator breaker will close and energize the battery charger within 10.25 seconds after a loss of a-c power. Failure of a battery charger or failure of a diesel generator to start would be a single failure for which there is a redundant train of electrical systems that will be used to achieve safe shutdown and mitigate design basis events. A failure of a battery charger would not prevent either start of the diesel generator or closure of the necessary breakers to re-establish a-c

power to the auxiliary a-c system. In the event of a charger failure, a backup charger has been provided and can be connected well within the battery's 4 hour duty cycle. Thus, the minimum 4 hour battery capacity provides considerable margin for the battery to perform its intended function.

Separate evaluations were performed to demonstrate sufficient battery capacity and to demonstrate system operability based on sufficient voltage at d-c equipment/device terminals.

The evaluation to demonstrate sufficient Class 1E battery capacity was based on ampere loads associated with Class 1E and non-Class 1E equipment as shown on Figures 8.3-1, 8.3-2, 8.3-2aa, and 8.3-2ab.

00-01

The evaluation to demonstrate d-c equipment/device operability was based on ensuring that the available operating voltage (or current) for required equipment was equal to or greater than the minimum operating voltage recommended by the applicable vendor or by actual tests to demonstrate component operability with margin. Available operating voltages (or currents in the case of D.G. field flashing) were evaluated to ensure operability of Class 1E devices based on the required time of operation and the applicable system losses resulting from voltage drop. Operability of non-Class 1E loads which are supplied from the 1A and 1B batteries was not evaluated.

System operating voltages were determined based on the battery as the sole source during the first 10.25 seconds following LOOP with only 59 cells or 58 cells connected. System operating voltages after 10.25 seconds were determined based on the battery at float voltage following restoration of a-c power to the battery charger.

The evaluation conservatively determined voltage drop based on the d-c load currents established by the battery capacity evaluation, as modified to include design margins, and the equivalent circuit resistance, as modified to compensate for worst case conductor temperatures.

Although there is no accident analysis that requires d-c system operability with the battery as the sole source after 10.25 seconds, the design objective was to ensure the ESF 125 v d-c system is capable of supporting/operating normal and required emergency d-c loads in the event of a DBA, or required SBO loads in the event of a 4 hour station blackout. Required SBO loads are normal (non-accident) loads necessary to ensure the reactor core is cooled and containment integrity is maintained in the event all a-c power is lost for a 4 hour period.

8.3.2.1.3 Capacity

The ampere demand of each ESF battery was calculated for the loads listed in the preceding Items 1 through 6, as well as for other connected d-c loads, to establish the worst case 4 hour duty cycle. This calculation resulted in the following 4 hour load profile.

1. Battery 1A - 376.9 amperes for the first minute, 200.3 amperes for the next 238 minutes, and 246.3 amperes for the last minute.

2. Battery 1B - 392.4 amperes for the first minute, 215.8 amperes for the next 238 minutes, and 261.8 amperes for the last minute.

00-01

The capacity of each ESF battery was then checked to ensure that the batteries are capable of supplying required d-c loads for the duty cycle. In addition the battery capacity includes design margin, accounts for battery degradation with age, and considers the reduction of battery capacity due to temperature variations. The capacity evaluation was based on a final (end of discharge) battery terminal voltage of 108 V d-c (or greater), which provides sufficient margin to ensure device operability with a reduction of up to 2 cells (58 cells connected) on either battery.

The calculated ampere demand includes normally connected devices with no distinction as to whether devices are required to operate or are desirable loads. The inclusion of the latter precludes the need for any load shedding and no operator action is required to maintain power to essential safety related loads during the 4 hour duty cycle. However, any load shedding performed during the battery duty cycle adds to the existing capacity margin and results in a higher battery voltage at the end of the duty cycle.

00-01

The d-c system is designed so that the loads with common a-c and d-c power supplies, such as inverters, are powered by the batteries during blackout, but are automatically returned to the a-c system upon ac bus voltage restoration. As a result, the battery chargers are required to have a minimum capacity of 150 amperes to provide the necessary 12 hour recharge. This is well within the system's 300 ampere battery charger rating.

8.3.2.1.4 Ventilation

The battery rooms and battery charger rooms are located in the Intermediate Building and are provided (as a group) with a once through ventilation system consisting of two (2) 100% capacity supply fans and two (2) 100% capacity exhaust fans as shown in Figure 9.4-16. The ventilation system is designed for continuous operation. Therefore, the chance of producing an explosive atmosphere due to evolution of hydrogen during the process of battery charging is minimized. The system is provided with high and low temperature alarm inputs to the HVAC control board annunciator system. The battery room ventilation system is discussed further in Section 9.4.6.

8.3.2.1.5 Equipment

8.3.2.1.5.1 Batteries and Battery Racks

All batteries are of the central station, lead calcium type and are designed for continuous float duty. Each cell is of the sealed type, assembled in a shock absorbing clear plastic container, with covers bonded in place to form a leakproof seal. The batteries are mounted on protected, corrosion resistant, steel racks for security and to facilitate maintenance. The Class 1E batteries and racks are designed to remain functional during a safe shutdown earthquake and remain in a satisfactory condition to perform their function in shutting down the reactor and maintaining the station in a safe condition.

8.3.2.1.5.2 Battery Chargers

Each solid state battery charger has an output for float and equalize modes with an input of 480 volt 3-phase, a-c power. Each charger is equipped with a d-c voltmeter, d-c ammeter, a-c failure relay, a ground detection annunciator alarm, low battery voltage alarm relay and fan failure alarm. A battery charger malfunction activates an alarm in the control room. Each battery charger is designed to prevent the 480 volt a-c system from becoming a load on the battery as a result of loss of 480 volt a-c input.

Tests have verified that battery charger stability is not load dependent.

There is no annunciator to alarm when the battery charger goes into a current limiting condition.

In addition to the charger output ammeter, a 0 center scale ammeter is connected to a shunt in the leads between the battery and the battery bus to indicate current flow to and from the battery. These 2 ammeters show the status of battery charging or discharging currents and d-c system loads at all times. Main breakers, as shown on Figures 8.3-1, 8.3-2, and 8.3-4 are equipped with auxiliary switches to operate indicator lights in the control room for an off normal position. Thus, the operator is provided with system status information. Following a loss of normal station power, the battery chargers are energized from the diesel generators.

Additional monitoring is provided by a special, narrow band, d-c voltage relay to monitor Class 1E battery voltage. The relay initiates an alarm in the control room if battery voltage falls slightly below normal float voltage.

Voltage monitoring in this manner provides a backup alarm if a charger fails since a fully charged battery suffers a rapid drop in voltage if its floating charge fails. Such a rapid voltage drop causes the voltage monitoring relay to initiate the associated alarm. Battery ground detection annunciation is provided on the main control board for both Class 1E and non-Class 1E Plant d-c systems.

The ratings for each battery charger continuous output are as follows:

1. Charger 1A - 300 amperes
2. Charger 1B - 300 amperes
3. Charger 1A-B - 300 amperes
4. Charger 1X - 400 amperes
5. Charger 1X-2X - 400 amperes

Each battery charger has capacity adequate to restore its associated battery to full charge while providing power to the largest combination of the various steady-state loads. The charging capacity is based upon restoring the battery to full charge from the design minimum charge within 12 hours after discharge regardless of the status of the station.

8.3.2.1.5.3 Main D-C Distribution Panels

Each battery distribution switchboard consists of a metal clad structure with 125 volt d-c, 2 wire, ungrounded main bus. Two (2) pole, manually operated, air circuit breakers protect each feed. 00-01

8.3.2.1.5.4 Class 1E Dual Input Inverters

The dual input inverter in each system provides continuous power to the 120 volt vital a-c buses. The output of the inverter is a regulated supply. Transfer from 1 input to the other is accomplished without interruption of the output. Each inverter is protected by circuit breakers on the 480 volt a-c input side, 120 volt vital a-c output side and 125 volt d-c input side. Each dual input inverter is provided with an a-c and a d-c ammeter. Abnormal conditions in the dual input inverter, including loss of a-c input, loss of d-c input, and loss of a-c output voltage cause alarms to occur in the control room.

The output of each inverter is connected to a distribution cabinet through an automatic static transfer switch and a normally closed circuit breaker. An alternate backup 480-120 volt transformer Class 1E power source is provided through the automatic static transfer switch. The feed to the transformers is from a 480 volt motor control center as indicated by Figures 8.3-1 and 8.3-2. The distribution cabinets have appropriately sized branch circuit breakers to feed reactor protection and other vital instrument channels. Most reactor protective schemes have 3 or 4 channels. Redundant instrument channels are fed from redundant vital buses. 99-01

Because of the preferred failure mode defined for the reactor protective instrumentation, failure of an instrument channel power source results in a reactor trip signal from the affected channel. Multiple power supplies are provided to prevent a single power supply failure from initiating a false reactor trip.

The vital bus rectifiers and inverters are assembled from high quality components, conservatively designed for long life and continuous operation.

By avoiding the use of electromechanical devices, routine maintenance downtime is greatly reduced. There are no vacuum tubes or moving parts in the completely static vital bus supply systems.

The ratings of each inverter are as follows:

1. Inverter No. 1 - 10 kVA.

2. Inverter No. 2 - 10 kVA.

3. Inverter No. 3 - 10 kVA.

4. Inverter No. 4 - 10 kVA.

8.3.2.1.5.5 Non-Class 1E Inverters

There are 2 non-Class 1E (balance of plant) inverters. Inverter No. 5 is a dual input inverter. The dual input inverter No. 5 provides continuous power to non-Class 1E 120 volt vital digital control systems and computer loads. Transfer from one input to the other is accomplished without interruption to the load. The output of inverter No. 5 is connected to a distribution panel through an automatic static transfer switch. An alternate backup 120 volt non-Class 1E power source is provided through the automatic static transfer switch. The AMSAC system, secondary plant digital control systems and the station computer constitutes the primary loads on this inverter. 00-01

Inverter No. 6 is a single input inverter supplied from the 125 volt d-c non-ESF system. Output from this inverter is paralleled with a supply from a 480-120 volt transformer which is connected, through a static transfer switch to the inverter main distribution panel. The transformer source serves as an alternate supply to the inverter main distribution panel. Upon loss of inverter output, automatic transfer of the inverter main distribution panel to the alternate supply is initiated. The primary load on inverter No. 6 is non-ESF instrumentation.

An alternate power source circuit breaker is provided in the distribution cabinet to permit manual transfer from the inverter or transformer power source to a backup power source as indicated by Figure 8.3-4.

Inverter ratings are as follows:

1. Inverter No. 5 - 10.0 kVA. 00-01

2. Inverter No. 6 - 10.0 kVA.

8.3.2.1.5.6 480-120 Transformer and Static Transfer Switch

An alternate source of power to each of the 120 volt vital a-c buses is provided by a 480-120 volt Class 1E, single phase transformer. The 480-120 volt transformer in each system is designed to supply the total 120 volt vital a-c bus load when the dual input inverter is out of service.

A static transfer switch is provided for inverter No. 6 to switch the 120 volt vital a-c bus loads from the single input inverter to the 480-120 volt transformer. The static transfer switch is a solid state device. Its operation is unaffected by load and power factor variations. Transfer of the 120 volt vital a-c bus loads from the single input inverter to the 480-120 volt transformer causes an alarm to occur in the control room. Transfer back to the inverter is performed manually at the discretion of the operator.

8.3.2.1.5.7 Nominal 120 Volt Vital A-C Bus System

The nominal 120 volt a-c vital bus system consists of 6 panels and 4 inverters which provide power to 4 independent channels of ESF instrumentations. Channels A and B consist of 2 panels and 1 inverter each while Channels C and D consist of 1 panel and 1 inverter each. Figures 8.3-1, 8.3-2, 8.3-2aa, and 8.3-2ab depict the system.

The vital bus system is a very reliable electrical system. It provides a stable supply to vital equipment and guarantees proper action when power is required, while eliminating spurious shutdowns.

The normal power source for each vital bus inverter is through the inverter static rectifier from a 480 volt ESF bus. Should the normal power source fail completely or be subject to transient voltage or frequency variations, the vital bus inverter power source becomes the battery charger or battery which is floating on standby service. This transition from static rectifier to battery power supply takes place without disturbing vital bus voltage or frequency. The station batteries are sized to carry this additional inverter load without chargers for no less than 4 hours. The chargers are sized to bring a fully discharged battery up to equalize charge voltage with the inverter load connected in 12 hours.

8.3.2.2 Analysis

8.3.2.2.1 Compliance

The Class 1E uninterruptible systems satisfy the criteria of Regulatory Guides 1.6 and 1.32 (see Appendix 3A), and General Design Criteria 17 and 18. The uninterruptible systems are designed so no action, automatic or manual, needs to be taken to make d-c or vital a-c power available to the equipment required immediately following LOCA or after a loss of a-c power. No operator action is required to maintain d-c or vital a-c power availability, based on single failure criteria, for safe shutdown or accident mitigation following a loss of a-c power.

Class 1E system components are identified and seismically qualified as described in Section 3.10. The battery was connected to a resistive load of approximately 20 amperes during seismic testing.

Class 1E equipment and the hostile environment to which it is subjected are discussed in Section 3.11.

Each uninterruptible system includes power sources and a distribution system arranged to provide power to associated system loads. No ties exist between Class 1E systems. Figures 8.3-1, 8.3-2, 8.3-2aa, and 8.3-2ab illustrate the independence of the Class 1E uninterruptible systems. Equipment, cables and other components are designed, identified and located in accordance with the criteria given herein. Sections 8.3.1.4 and 8.3.1.5 discuss general design criteria applicable to the uninterruptible systems as well as to the a-c systems.

8.3.2.2.2 Maintenance and Testing

The uninterruptible systems are subjected to periodic maintenance tests to determine the condition of each individual component. Batteries are checked for electrolyte level, specific gravity, cell voltage and visual signs of deterioration. A battery performance discharge test is performed according to IEEE-450[7]. Battery chargers, and inverters are checked by visual inspection weekly and performance tests are conducted periodically.

Maintenance and testing procedures for batteries are in accordance with IEEE-450[7]. Testing and inspection are performed according to the following:

1. General inspections and recording of data are performed in accordance with IEEE-450[7].

2. Quarterly tests, inspections, and recording of data are performed in accordance with IEEE-450[7].

3. Yearly inspections are performed in accordance with IEEE-450[7].

4. Battery service tests are performed in accordance with IEEE-450[7]. The time interval between tests is based on a nominal 18 month refueling outage schedule. Service tests are not performed during outages that require performance of a capacity (performance discharge) test. (See Regulatory Guide 1.32 discussion in Appendix 3A.) 00-01

5. Battery capacity tests are performed in accordance with IEEE-450[7] and IEEE-308[8].

8.3.2.3 Physical Identification of Safety-Related Equipment

The physical identification of safety-related equipment is discussed in Section 8.3.1.5.

8.3.3 FIRE PROTECTION FOR CABLE SYSTEMS

The 8000 volt rated power cable, 600 volt rated power cable for 480 volt and 120 volt a-c systems and 125 volt d-c systems, 600 volt rated control cable for 120 volt a-c and 125 volt d-c controls and 300 volt instrument cable are constructed with an overall fire retardant outer jacket.

Cable for external circuits is type tested in accordance with Section 2.5 (Flame Tests) of IEEE-383[9] and the cables are certified to be of fire retardant construction.

8.3.3.1 Cable Derating, Cable Tray Fill, and Cable Construction

Cables are derated to compensate for ambient temperatures and for the presence of adjacent power cables. Power cables are sized and derated on the basis of IPCEA P-46-426[4], supplemented by IPCEA-NEMA P54-440[5].

Motor feeders, power panel feeds and small lighting and receptacle panel transformer feeds are sized for 125% of full load current. Large power transformer feeders are sized for 140% of full load current at maximum rating. Motor control center feeders are sized for 140% of the calculated normal diversified load current. Feeders to resistive loads are sized on the basis of 110% of rated current at rated voltage.

In selecting IPCEA ampacity tables, a load factor of 100% is assumed.

Ampacities of 7200 volt power cables are in accordance with IPCEA P-46-426[4] in air ratings, derated by factors of 0.70 in 40°C areas and 0.63 in 50°C areas.

Ampacities of 480 volt cables or large d-c cables in single layer power trays are in accordance with IPCEA P-46-426[4] in air ratings and are derated by factors of 0.70 in 40°C areas and 0.63 in 50°C areas.

Ampacities of 480 volt cables or d-c cables in a random lay power tray are in accordance with IPCEA-NEMA P-54-440[5]. Derating factors for 3 inch depth are used.

Ampacities of small 480 volt cables or small 125 volt d-c cables (#10 AWG and smaller), when run in control trays, are in accordance with IPCEA P-46-426[4] in air ratings derated by a factor of 0.50.

Ampacities for 7.2 kV and 480 V 3 conductor cables in conduit wrapped in Kaowool at 40°C ambient temperature are calculated to ensure a maximum copper surface temperature of 90°C. Basis for these calculations are data obtained from IPCEA P-46-426. The application ampacities of the cables are determined by applying a 1.25 derating factor to the design ampacities. The cable sizes are then selected so that the cable application ampacity is equal to or greater than the design current value determined from the cable sizing criteria.

RN 99-002

No ampacity derating factors are applied to control and instrument cables.

Ampacities are determined on the basis of 90°C tables at 40°C ambient in all interior areas except containment. Containment or ESF motors in areas requiring forced ventilation of the motor are determined on the basis of 50°C ambient.

Pressurizer heater cables are sized by special ratings due to the operating environment.

The Reactor Building cooling unit fan motor power cables and the post accident hydrogen recombiner unit power cables[10] require special consideration since these motors must operate in the post accident containment environment. These cables are sized to carry the required current during the post accident temperature and pressure transient without exceeding the recommended emergency operating temperature rating for the cable and to continue to operate for a minimum of 6 months after the accident.

A preventive maintenance program to test the insulation values of circuits and equipment is followed.

Ladder type tray systems are used for power and control trays. Instrument trays are solid bottom trays with top cover plates.

The 5 basic tray systems are as follows:

1. The 7200 volt power trays.

2. The 480 volt and below, single layer power trays.

3. The 480 volt and below, random lay power trays.

4. Control trays.

5. Instrument trays.

In vertical stacking the 7200 volt power trays are on top, 480 volt power trays next lower, control trays next lower, and instrument trays on the bottom.

8.3.3.1.1 7200 Volt Power Trays

No other type cable is mixed in the same tray with 7200 volt power cable. These trays are 4 inches deep (inside dimension). There is 1 layer of cable with no spacing between cables.

8.3.3.1.2 480 Volt and Below, Single Layer Power Trays

The 480 volt and below, single layer power tray system is exclusively for 480 volt, 3-conductor power cables or d-c power cables. This tray system is 4 inches deep (inside dimensions) and contains only large (MCM sizes) and 4/0 cables. There is 1 layer of cables with no spacing between cables.

8.3.3.1.3 480 Volt and Below, Random Lay Power Trays

The 480 volt and below, random lay power cable tray is for 480 volt power cables 4/0 and smaller. The tray is 6 inches deep (inside dimensions).

$$\text{Percent fill} = \frac{\left(d_1^2+d_2^2+\ldots.+d_n^2\right) x\, 100}{\text{Tray Depth x Tray Width}}$$

where: $d_1, d_2, \ldots . d_n$ = Diameters of all cables in the tray presently planned plus all known future cables.

Small 480 volt power cables (#10 AWG and smaller) may be run either in the random lay power cable tray or the control tray. Circumstances may dictate running an MCM size power cable in a random lay power tray. The cable is then derated with the derating factor appropriate to the random lay trays.

8.3.3.1.4 Control Trays

The control trays contain control cables, small 480 volt power cables (#10 AWG and smaller, except for selected motor operated valves which use larger sized cables) and small d-c power cables (#10 AWG and smaller). All of these cables carry either intermittent current or continuous current of 5 Amps or less. Single phase, 120 volt a-c circuits (#10 AWG and smaller) carrying 5 amps or less may also be run in the control trays. The amount of heat generated from cables which carry intermittent current is negligible based on the large majority of time the load is not operating. 00-01

The control trays are 6 inches deep (inside dimensions). The design limit for control tray fill is based on verifying that the weight of new and existing cable is within the tray and tray support weight capability.

8.3.3.1.5 Instrument Trays

Instrument trays contain low level analog signals cables. These trays are 6 inches deep (inside dimensions). The design limit for instrument tray fill is based on verifying that the weight of new and existing cable is within the tray and tray support weight capability. In addition to all low level analog signal cables, the instrument trays are used for digital contact (breaker contact) cables where the source of power is the reactor protection or computer packages, otherwise all digital circuits are in the control trays. 00-01

8.3.3.1.6 Cable Tray Fill Criteria

The 50% cable tray fill criteria is the design objective that applies only to random lay power trays. Random lay power trays contain 480 volt power cables smaller than MCM sizes. Power cables, No. 10 and smaller, may be run either in random lay power tray or in control tray. 00-01

The 30% fill criteria recommendation in IEEE Propose Guide P-422[3] is based upon the summation of cross sectional areas of cables. The 50% fill noted in Section 8.3.1.4.3 is based upon the summation of the cable diameter squared areas. Fill of 50% on this basis is equivalent to 39% fill on the IEEE Propose Guide P-422[3] basis (i.e., 3.1416/4.0 times 50%). Through experience, it has been found that approximately 40% fill on the basis of cross sectional area or 50% fill on the basis of diameter squared area is satisfactory with respect to physical tray loading and uses the tray more efficiently. 00-01 00-01

Power cables are rated on the basis of this 3 inch physical depth, using the derating factors of IPCEA-NEMA P-54-440[5].

These derating factors are in agreement with the 50% or 3 inch depth physical loading. Control and instrument cables require no derating.

Where random lay power tray fill exceeds 50%, worst case conditions have been analyzed to assure the capability of the tray hangers to support the additional weight and, that sufficient margin exists in the cable sizing to account for the heating effects (Reference IEEE Transaction Paper 70TP557PWR "Ampacities for Cables in Randomly Filled Trays", also, see FSAR Section 8A.1.2). For each random lay power tray, a calculation was performed to address the additional heat loading from the new power cable and its effect on the ampacity (heat loading) of other power cables in that tray. The existing and new power cables were derated if the total heat loading of the cables in the tray was not within the allowable heat loading based on the percent fill. In addition, this calculation determined the weight of the new and existing cables to ensure that their combined weight was less than the maximum weight that the tray support can carry. For trays filled to the maximum weight allowed by the tray supports, the maximum allowable cable sidewall pressures will not be exceeded (Reference FSAR Section 8A.1.3). In the event overfill occurs at tray intersections, protection will be provided to preclude cable damage. 00-01

The cable tray fill criteria for control and instrument trays is controlled by the cable management system computer program. This program contains an alarm limit for the maximum weight allowed for each tray size used. Therefore, manual calculations to monitor cable weight are not required since this calculation is done by the cable management system and an alarm is provided if the tray or tray support weight capability is exceeded. Heat loading is not a concern for control and instrumentation cables due to their small currents and/or intermittent operation. 00-01

For expanded cable and tray design considerations, see Appendix 8A.

8.3.3.1.7 Cable Construction

Feeder and motor cables in 7200 volt service are insulated cables rated at a minimum of 8000 volts. Single conductor cables or each conductor of multi-conductor cables in 7200 volt service are shielded.

Power cables for 480 volt service are insulated cable rated at a minimum of 600 volts. Single conductor cables and multi-conductor cables are provided with an overall flame retardant jacket.

Control cables are of single or multi-conductor construction with a 600 volt (minimum) insulation, total coverage electrostatic shield and overall flame retardant jacket.

Low voltage instrument cables are insulated cables rated at 300 volts, minimum. Where required, these cables are provided with a total coverage electrostatic shield and with an overall flame retardant jacket.

8.3.3.2 Fire Detection and Protection Devices

Fire detection and protection systems, either automatically or manually initiated, are provided in those areas required to preserve the integrity of circuits for redundant safety-related systems. A fixed, low pressure carbon dioxide fire extinguishing system is installed in the relay room and computer room at elevation 436’ of the Control Building. A preaction sprinkler system is installed in the following areas of the Control Building:

1. Cable spreading room - elevation 425’.

2. Cable spreading room - elevation 448’.

3. Cable chase areas.

Smoke detection systems are installed in the switchgear rooms and penetration access areas. Section 9.5.1 provides greater detail concerning fire detection and protection.

The fire hazard to cables is reduced by cable construction as described in Section 8.3.3.1.7. 00-01

8.3.3.3 Fire Barriers and Separation Between Redundant Cable Trays

Criteria used for the separation between different Class 1E system trays and between Class 1E and non-Class 1E trays are given in Section 8.3.1.4. Where the required separation cannot be maintained, fire barriers are installed in accordance with IEEE P-422[3], Section 8.3.2. The fire barriers are qualified in accordance with criteria given in Section 9.5.1.

In cases of multiple separation violations between non-safety related trays and redundant safety related trays in the same fire area, tray covers or circuit breaker surveillance has been provided as a resolution. Refer to FSAR Section 8.3.1.4.1, item 4 for details.

8.3.3.4 Fire Stops

Openings in walls, floors, and ceilings, which are provided for the routing of raceways, are protected by fire stops. Fire stops are designed with a fire rating equivalent to that required for the wall, floor or ceiling with which it is associated. The materials used in fabricating fire stops are rated in accordance with ASTM E 119. In addition to preventing the spread of fire, fire stops are designed to be reasonably leaktight, thereby limiting the propagation of smoke and gases from one area to another.

8.3.4 SAFETY RELATED CABLE

No natural polyethylene materials are used in safety related inter-connecting circuits between equipment in the Virgil C. Summer Nuclear Station. Cables which have cross linked polyethylene are used for various plant applications.

8.3.5 REFERENCES

1. Institute of Electrical and Electronic Engineers, "Installation Inspection, and Testing Requirements for Instrumentation and Electric Equipment during the Construction of Nuclear Power Generating Stations," IEEE-336-1971.

2. Deleted (RN 99-037) 00-01

3. Institute of Electrical and Electronics Engineers, "Design and Installation of Cable Systems in Power Generation Stations," IEEE Proposed Guide P-422, prepared by the Working Group on Wire and Cable Systems Station Design Subcommittee, Power Generation Committee. 00-01

4. Insulated Power Cable Engineers Association, "Power Cable Ampacities," IPCEA P-46-426-1962.

5. Insulated Power Cable Engineers Association - National Electrical Manufacturers Association, "Ampacities of Cables in Open-Top Cable Trays," IPCEA-NEMA P-54-440.

6. Institute of Electrical and Electronics Engineers, "Guide for Class 1E Control Switch Boards for Nuclear Power Generating Stations," IEEE-420-1973.

7. Institute of Electrical and Electronics Engineers, "Recommended Practice for Maintenance, Testing, and Replacement of Large Stationary Type Power Plant and Substation Lead Storage Batteries," IEEE-450-1987. 98-01

8. Institute of Electrical and Electronics Engineers, "Criteria for Class 1E Electric Systems for Nuclear Power Generating Systems," IEEE-308-1971.

9. Institute of Electrical and Electronics Engineers, "Standard for Type Test of Class 1E Electric Cables, Field Splices, and Connections for Nuclear Power Generating Stations," IEEE-383-1974.

10. "Electric Hydrogen Recombiner for PWR Containments," WCAP-7709-L, Supplement 7, (Proprietary) and WCAP-7820, Supplement 7 (non-Proprietary), August, 1977.

11. Institute of Electrical and Electronics Engineers, "Qualifying Class 1E Electric Equipment for Nuclear Power Generating Stations, General Guide," IEEE-323-1971.

12. Institute of Electrical and Electronics Engineers, "Seismic Qualification of Class 1E Equipment for Nuclear Power Generating Stations," IEEE-344-1975.

13. Virgil C. Summer Nuclear Station, FPER. 00-01

14. Institute of Electrical and Electronics Engineers, "Criteria for Separation of Class 1E Equipment and Circuits," IEEE-384, 1974.

15. 10 CFR Part 50, Section 50.63, "Loss of all Alternating Current Power."

16. U. S. Nuclear Regulatory Commission Regulatory Guide 1.155, "Station Blackout."

17. NUMARC 87-00, Nuclear Management and Resources Council, Inc., "Guidelines and Technical Bases for NUMARC Initiatives Addressing Station Blackout at Light Water Reactor."

18. Calculation No. DC08500-022, "Determination of Maximum Sidewall Pressure Imposed on Cable in Cable Tray as a Result of Cable Weight." 00-01

TABLE 8.3-1

MAJOR ELECTRICAL EQUIPMENT

Equipment	Tag Numbers	Description and ratings	
Unit Generator	XGN1-EG	1,137,680 kVA, 0.905 pf, 22 kV, 1800 rpm, 3ϕ, 60 Hz	RN 05-038
Standby Diesel Generator	XEG0001A, B-E (Engine) XEG0001A, B-G (Generator)	4250 kW. 7.2 kV, 0.8 pf, 3ϕ, 60 Hz	
Main Transformer	XTF1-EG	1100/1232 MVA, 55C/65C, FOA, 242-22 kV, 3ϕ, 60 Hz	RN 09-014
Unit Auxiliary Transformer	XTF2-ES	48/64 MVA, 55C, 22-7.2/7.2/7.2 kV	
Emergency Auxiliary Transformer	XTF31-ES XTF32-ES	24/32/40/44.8 MVA, 55/55/55/65 with nominal 8.0% impedance from HV to LV, based upon 24 MVA base, 230-7.2/7.2 kV	
Engineered Safety Transformer	XTF4-ES XTF5-ES	10/12.5/14 MVA, 115/7.2 kV	
7.2 kV Line Voltage Regulator	XTF6-ES	1500 kVA, 55° C rise, Class OA, 7.2 kV $\pm$ 10% in 32 - 5/8% steps, 1200 Amps, 1.12% based on 15 MVA, 3ϕ, 60 Hz	00-01
Generator Circuit Breaker	XCB0010-EG	1ϕ, 60 Hz, 22 kV (nominal) 36 kV (max), interrupting rating of 210 kA (Sym System Source) and 150 kA (Sym Gen Source).	RN 10-018

TABLE 8.3-2

SYMMETRICAL INTERRUPTING CAPACITY FOR
480 VOLT UNIT SUBSTATION CUBICLES

	Symmetrical Interrupting Capacity	
Frame Size (amps)	Instantaneous Trip (amps)	Delayed Trip (amps)
600	30,000	22,000
1600	50,000	50,000
2000	65,000	55,000
3000	65,000	65,000

FSAR TABLE 8.3-3 PART A1
Connected Automatic and Manual Loading and Unloading of the Diesel Generator
Channel A

		Rated Load Data			Load	LARGE BREAK LOCA WITH A LOOP				STEAM LINE BREAK WITH A LOOP					LOSS OF OFFSITE POWER				
						Injection Phase - 1/2 to 1 Hour		Indefinite Recirc. (8)		Short Term Phase - 2 Hours		Long Term. (8)			Hot Standby - 30 Hours		Cold Shutdown (8)		
Tag Number		Hp/kVA	kW	Volts	Sequencer (Sec.) (9)	Auto-Start	Load kW	Load kVA	Load kW	Load kVA	Auto-Start	Load kW	Load kVA	Load kW	Load kVA	Auto-Start	Load kW	Load kVA	Load kW	Load kVA	Notes
XMC1B1X																					
XTG00001	TURBINE TURNING GEAR	60.0	52.2	460	N/A	NO	0.0	0.0	54.8	63.0	NO	0.0	0.0	54.8	63.0	NO	54.8	63.0	54.8	63.0	1,**25**
Total Load On Motor Control Center: XMC1B1X							**0.0**	**0.0**	**54.8**	**63.0**		**0.0**	**0.0**	**54.8**	**63.0**		**54.8**	**63.0**	**54.8**	**63.0**	
XMC1DA2X																					
APN08004A	LIGHTING PANEL #4, ESSENTIAL PANEL, TRAIN A	10.0	8.5	480	0	N/A	3.4	4.0	3.4	4.0	N/A	3.4	4.0	3.4	4.0	N/A	3.4	4.0	3.4	4.0	
APN08012A	LIGHTING PANEL #13, ESSENTIAL PANEL, TRAIN A	30.0	25.5	480	0	N/A	22.9	27.0	22.9	27.0	N/A	22.9	27.0	22.9	27.0	N/A	1.7	2.0	22.9	27.0	
APN08034	LIGHTING PANEL #34, ESSENTIAL PANEL	65.0	55.3	480	0	N/A	15.3	18.0	15.3	18.0	N/A	15.3	18.0	15.3	18.0	N/A	15.3	18.0	15.3	18.0	
APN08035A	LIGHTING PANEL #35, ESSENTIAL PANEL (TRAIN A POWER FEED)	10.0	8.5	480	0	N/A	4.3	5.0	4.3	5.0	N/A	4.3	5.0	4.3	5.0	N/A	4.3	5.0	4.3	5.0	
APN08053A	ESSENTIAL OUTDOOR LTG. PNL A	49.0	41.6	480	0	N/A	41.6	49.0	41.6	49.0	N/A	41.6	49.0	41.6	49.0	N/A	41.6	49.0	41.6	49.0	
XBC1A	DC 1A BATTERY CHARGER	43.3	32.5	480	0	N/A	7.6	10.1	7.6	10.1	N/A	7.6	10.1	7.6	10.1	N/A	7.6	10.1	7.6	10.1	
XFN00026	CONTROLLED ACCESS COOLING SUPPLY FAN MOTOR	15.0	12.8	460	N/A	NO	0.0	0.0	0.0	0.0	NO	0.0	0.0	0.0	0.0	NO	0.0	0.0	0.0	0.0	22
XFN00028A	CONTROLLED ACCESS EXHAUST FAN A	50.0	42.5	460	N/A	NO	0.0	0.0	0.0	0.0	NO	0.0	0.0	0.0	0.0	NO	0.0	0.0	0.0	0.0	22
XFN00030A	CONT RM EMERGENCY FILTERING SYS FAN A	40.0	33.1	460	0	YES	33.1	40.0	33.1	40.0	YES	33.1	40.0	33.1	40.0	YES	33.1	40.0	0.0	0.0	
XFN00032A	CONTROL ROOM COOLING UNIT A FAN	25.0	20.8	460	0	YES	14.9	18.0	14.9	18.0	YES	14.9	18.0	14.9	18.0	YES	14.9	18.0	14.9	18.0	
XFN00036A	RELAY ROOM SUPPLY FAN A	15.0	12.4	460	0	YES	9.1	11.0	9.1	11.0	YES	9.1	11.0	9.1	11.0	YES	9.1	11.0	9.1	11.0	
XFN00038A	BATT&CHG RM AIR HANDLING UNIT A SUP FAN	10.0	8.2	460	0	YES	5.7	7.0	5.7	7.0	YES	5.7	7.0	5.7	7.0	YES	5.7	7.0	5.7	7.0	
XFN00039A	BATTERY ROOM EXHAUST FAN A	5.0	4.3	460	0	YES	0.5	0.6	0.5	0.6	YES	0.5	0.6	0.5	0.6	YES	0.5	0.6	0.5	0.6	
XFN00041A	COMPUTER ROOM SUPPLY FAN A (UNIT 1)	5.0	4.3	460	N/A	NO	0.0	0.0	0.0	0.0	NO	0.0	0.0	0.0	0.0	NO	0.0	0.0	0.0	0.0	22
XFN00050	ESF SWGR ROOM 1DA AH UNIT SUPPLY FAN	25.0	20.8	460	0	YES	7.5	9.0	7.5	9.0	YES	7.5	9.0	7.5	9.0	YES	7.5	9.0	7.5	9.0	
XFN00055	CONTROL ACCESS LAB HOOD SUPPLY FAN	5.0	4.3	460	N/A	NO	0.0	0.0	0.0	0.0	NO	0.0	0.0	0.0	0.0	NO	0.0	0.0	0.0	0.0	22
XFN00081A	SW BSTR PUMP AREA AH UNIT A SUPPLY FAN	3.0	2.3	460	0	YES	2.3	3.0	2.3	3.0	YES	2.3	3.0	2.3	3.0	YES	2.3	3.0	0.0	0.0	5
XFN00083A	EMER FW PUMP AREA AH UNIT A SUPPLY FAN	5.0	3.6	460	0	YES	2.2	3.0	0.0	0.0	YES	2.2	3.0	0.0	0.0	YES	2.2	3.0	0.0	0.0	23

FSAR TABLE 8.3-3 PART A1
Connected Automatic and Manual Loading and Unloading of the Diesel Generator
Channel A

		Rated Load Data			Load	LARGE BREAK LOCA WITH A LOOP				STEAM LINE BREAK WITH A LOOP					LOSS OF OFFSITE POWER				
						Injection Phase - 1/2 to 1 Hour		Indefinite Recirc. (8)		Short Term Phase - 2 Hours		Long Term. (8)			Hot Standby - 30 Hours		Cold Shutdown (8)		
Tag Number		Hp/kVA	kW	Volts	Sequencer (Sec.) (9)	Auto-Start	Load kW	Load kVA	Load kW	Load kVA	Auto-Start	Load kW	Load kVA	Load kW	Load kVA	Auto-Start	Load kW	Load kVA	Load kW	Load kVA	Notes
XMC1DA2X (Continued)																					
XFN00087A	CONTROLLED ACCESS LAB HOOD EXHAUST FAN A	5.0	4.3	460	N/A	NO	0.0	0.0	0.0	0.0	NO	0.0	0.0	0.0	0.0	NO	0.0	0.0	0.0	0.0	22
XFN00106A	SPEED SWITCH ROOMS AH UNIT A SUPPLY FAN	10.0	8.2	460	0	YES	5.7	7.0	5.7	7.0	YES	5.7	7.0	5.7	7.0	YES	5.7	7.0	5.7	7.0	
XHX00001A CNTRL PWR	HVAC SYSTEM MECHANICAL WATER CHILLER A	15.0	12.8	480	0	N/A	6.4	7.5	6.4	7.5	N/A	6.4	7.5	6.4	7.5	N/A	6.4	7.5	6.4	7.5	
XHX00001C CNTRL PWR	HVAC SYSTEM MECH. WATER CHILLER C CHANNEL A	15.0	12.8	480	0	N/A	6.4	7.5	6.4	7.5	N/A	6.4	7.5	6.4	7.5	N/A	6.4	7.5	6.4	7.5	
XTF09005A	RECEPTACLE TRANSFORMER #5	10.0	8.5	480	0	N/A	4.3	5.0	4.3	5.0	N/A	4.3	5.0	4.3	5.0	N/A	4.3	5.0	4.3	5.0	
XTF1FA	XFMR FOR 120V AC NSSS INSTR. MAIN DISTR. PNL 1FA	25.0	21.3	480	0	N/A	7.1	8.3	7.1	8.3	N/A	7.1	8.3	7.1	8.3	N/A	7.1	8.3	7.1	8.3	
Total Load On Motor Control Center: XMC1DA2X							**200.3**	**240.0**	**198.2**	**237.1**		**200.3**	**240.0**	**198.2**	**237.1**		**179.1**	**215.0**	**162.8**	**194.1**	
XMC1DA2Y																					
IRM00003	RADIATION MONITORING MAIN PLANT VENT EXHAUST PUMP 1	1.0	0.8	460	0	YES	0.8	1.0	0.8	1.0	YES	0.8	1.0	0.8	1.0	YES	0.8	1.0	0.8	1.0	4
IRM00004	RADIATION MONITORING REACTOR BUILDING PURGE EXHAUST PUMP	1.0	0.8	460	0	YES	0.8	1.0	0.8	1.0	YES	0.8	1.0	0.8	1.0	YES	0.8	1.0	0.8	1.0	4
XBC1A-1B TRAIN A	DC 1A-1B BACKUP BATTERY CHRG	43.3	32.5	480	N/A	NO	0.0	0.0	0.0	0.0	NO	0.0	0.0	0.0	0.0	NO	0.0	0.0	0.0	0.0	21
XBC1X	BATTERY CHARGER 1X	86.7	65.0	480	0	N/A	37.7	50.2	37.7	50.2	N/A	37.7	50.2	37.7	50.2	N/A	37.7	50.2	37.7	50.2	19
XFN00046A	CHARGING/SI PUMP RM 1 COOLING UNIT FAN	3.0	2.3	460	0	YES	2.3	3.0	2.3	3.0	YES	2.3	3.0	0.0	0.0	YES	2.3	3.0	0.0	0.0	
XFN00049A	RHR/SPRAY PUMP ROOM 1 COOLING UNIT FAN	3.0	2.3	460	0	YES	2.3	3.0	2.3	3.0	YES	2.3	3.0	2.3	3.0	YES	2.3	3.0	2.3	3.0	
XFN00132	AUX BLDG MCC-SWGR ROOM COOLING UNIT FAN	3.0	2.3	460	0	YES	1.5	2.0	1.5	2.0	YES	1.5	2.0	1.5	2.0	YES	1.5	2.0	1.5	2.0	
XIT05901	INSTRUMENT SUPPLY INVERTERS	10.0	8.5	480	0	N/A	6.7	7.9	6.7	7.9	N/A	6.7	7.9	6.7	7.9	N/A	6.7	7.9	6.7	7.9	
XIT05902	INSTRUMENT SUPPLY INVERTERS	10.0	8.5	480	0	N/A	4.1	4.8	4.1	4.8	N/A	4.1	4.8	4.1	4.8	N/A	4.1	4.8	4.1	4.8	
XMC1DA2Y HTR	SPACE HTRS FOR XMC1DA2Y	3.4	3.4	480	N/A	N/A	3.4	3.4	3.4	3.4	N/A	3.4	3.4	3.4	3.4	N/A	3.4	3.4	3.4	3.4	
XPN00040 TRAIN A	PUMP AUXILIARIES TRANSFER PNL-XPP0043C	5.0	4.3	480	0	YES	0.8	1.0	0.8	1.0	YES	0.8	1.0	0.8	1.0	YES	0.8	1.0	0.8	1.0	17
XPN02023	REFLING WTR STRGE TNK & PIPNG HEAT TRACNG CNTRALZED CONT PAN	30.0	30.0	480	0	YES	25.5	25.5	25.5	25.5	YES	25.5	25.5	25.5	25.5	YES	25.5	25.5	25.5	25.5	RN 12-006
XPN02007	REAC MU WTR STRGE TANK&PIPING HEAT TRACING CENTRLZD CONTROL	20.0	20.0	480	0	YES	17.0	17.0	17.0	17.0	YES	17.0	17.0	17.0	17.0	YES	17.0	17.0	17.0	17.0	

FSAR TABLE 8.3-3 PART A1
Connected Automatic and Manual Loading and Unloading of the Diesel Generator
Channel A

Tag Number	Rated Load Data Hp/kVA	kW	Volts	Load Sequencer (Sec.) (9)	LARGE BREAK LOCA WITH A LOOP: Injection Phase - 1/2 to 1 Hour Auto-Start	Load kW	Load kVA	Indefinite Recirc. (8) Load kW	Load kVA	STEAM LINE BREAK WITH A LOOP: Short Term Phase - 2 Hours Auto-Start	Load kW	Load kVA	Long Term. (8) Load kW	Load kVA	LOSS OF OFFSITE POWER: Hot Standby - 30 Hours Auto-Start	Load kW	Load kVA	Cold Shutdown (8) Load kW	Load kVA	Notes
XMC1DA2Y (Continued)																				
XPN02021	SODIUM HYDROXIDE SPRAY SYSTEM HEAT TRACING CENTRLZD CONRL P																			
	3.0	3.0	480	0	YES	0.0	0.0	0.0	0.0	YES	0.0	0.0	0.0	0.0	YES	0.0	0.0	0.0	0.0	
XPN07215A 480V PWR	POST ACCIDENT ANALYZER SYSTEM																			
	1.5	1.3	480	0	N/A	0.0	0.0	1.3	1.5	N/A	0.0	0.0	0.0	0.0	N/A	0.0	0.0	0.0	0.0	1
XPP00013A	BORIC ACID PUMPS																			
	15.5	13.2	460	0	NO	0.0	0.0	0.0	0.0	NO	0.0	0.0	0.0	0.0	NO	0.0	0.0	0.0	0.0	
XPP00043A PP AUX OIL	CHARGING/SI PUMP A AUXILIARY OIL PUMP ALOP1																			
	2.0	1.7	460	0	YES	1.2	1.4	1.2	1.4	YES	1.2	1.4	1.2	1.4	YES	1.2	1.4	0.0	0.0	
XTF04006	SECURITY SYSTEM TRANSFER SWITCH (FEEDS XTF05014)																			
	37.5	31.9	480	0	N/A	25.5	30.0	25.5	30.0	N/A	25.5	30.0	25.5	30.0	N/A	25.5	30.0	25.5	30.0	17
XTF05032	480/240/120V XFMR FOR METEOROLOGICAL TOWER																			
	6.0	5.1	480	0	N/A	4.6	5.4	4.6	5.4	N/A	4.6	5.4	4.6	5.4	N/A	4.6	5.4	4.6	5.4	
XTF08023A	XFMR FOR LIGHTING PANEL 23, ESSENTIAL PANEL, TRAIN A																			
	15.0	12.8	480	0	N/A	7.6	9.0	7.6	9.0	N/A	7.6	9.0	7.6	9.0	N/A	7.6	9.0	7.6	9.0	
Total Load On Motor Control Center: XMC1DA2Y						**141.7**	**165.6**	**143.0**	**167.2**		**141.7**	**165.6**	**139.5**	**162.7**		**141.7**	**165.6**	**138.3**	**161.3**	
XMC1DA2Z																				
APN08037A	LIGHTING PANEL #37, ESSENTIAL PANEL																			
	45.0	38.3	480	0	N/A	2.5	3.0	2.5	3.0	N/A	2.5	3.0	2.5	3.0	N/A	2.5	3.0	2.5	3.0	
XAC00008A	AIR STARTING PACKAGE - DIESEL GEN.																			
	15.0	12.8	460	0	YES	13.2	15.5	0.0	0.0	YES	13.2	15.5	0.0	0.0	YES	13.2	15.5	0.0	0.0	24
XAC00008B	AIR STARTING PACKAGE - DIESEL GEN.																			
	15.0	12.8	460	0	NO	0.0	0.0	0.0	0.0	NO	0.0	0.0	0.0	0.0	NO	0.0	0.0	0.0	0.0	
XFN00075A	DG AREA A VENTILATION AIR SUPPLY FAN A																			
	30.0	24.7	460	0	YES	20.6	25.0	20.6	25.0	YES	20.6	25.0	20.6	25.0	YES	20.6	25.0	20.6	25.0	
XFN00075B	DG AREA A VENTILATION AIR SUPPLY FAN B																			
	30.0	24.7	460	0	YES	20.6	25.0	20.6	25.0	YES	20.6	25.0	20.6	25.0	YES	20.6	25.0	20.6	25.0	
XMC1DA2Z HTR	SPACE HTRS FOR XMC1DA2Z																			
	0.7	0.7	480	N/A	N/A	0.7	0.7	0.7	0.7	N/A	0.7	0.7	0.7	0.7	N/A	0.7	0.7	0.7	0.7	
XPN00047	NO. 1A DIESEL POWER PANEL																			
	56.0	47.6	480	0	N/A	47.6	56.0	47.6	56.0	N/A	47.6	56.0	47.6	56.0	N/A	47.6	56.0	47.6	56.0	
XPP00004A	DG FUEL OIL TRANSFER PUMP 4A																			
	1.0	0.7	460	0	YES	0.4	0.6	0.4	0.6	YES	0.4	0.6	0.4	0.6	YES	0.4	0.6	0.4	0.6	
XPP00141A	DG FUEL OIL TRANSFER PUMP 141A																			
	1.0	0.7	460	0	YES	0.4	0.6	0.4	0.6	YES	0.4	0.6	0.4	0.6	YES	0.4	0.6	0.4	0.6	
XPP00146A	DIESEL GENERATOR BLDG SUMP PUMP																			
	2.0	1.7	460	0	NO	0.0	0.0	0.0	0.0	NO	0.0	0.0	0.0	0.0	NO	0.0	0.0	0.0	0.0	22
Total Load On Motor Control Center: XMC1DA2Z						**106.1**	**126.4**	**93.0**	**110.9**		**106.1**	**126.4**	**93.0**	**110.9**		**106.1**	**126.4**	**93.0**	**110.9**	

RN 12-006

FSAR TABLE 8.3-3 PART A1
Connected Automatic and Manual Loading and Unloading of the Diesel Generator
Channel A

Tag Number	Rated Load Data Hp/kVA	kW	Volts	Load Sequencer (Sec.) (9)	LARGE BREAK LOCA WITH A LOOP: Injection Phase - 1/2 to 1 Hour Auto-Start	Load kW	Load kVA	Indefinite Recirc. (8) Load kW	Load kVA	STEAM LINE BREAK WITH A LOOP: Short Term Phase - 2 Hours Auto-Start	Load kW	Load kVA	Long Term. (8) Load kW	Load kVA	LOSS OF OFFSITE POWER: Hot Standby - 30 Hours Auto-Start	Load kW	Load kVA	Cold Shutdown (8) Load kW	Load kVA	Notes	
XMC1EA1X																					
APN04006	SW BLDG POWER PANEL 1																				
	60.0	60.0	480	0	N/A	17.0	17.0	17.0	17.0	N/A	17.0	17.0	17.0	17.0	N/A	17.0	17.0	17.0	17.0		
APN08031A	LIGHTING PANEL 31, ESSENTIAL PANEL, TRAIN A POWER FEED																				
	10.0	8.5	480	0	N/A	6.0	7.0	6.0	7.0	N/A	6.0	7.0	6.0	7.0	N/A	6.0	7.0	6.0	7.0		
XFN00080A	SERVICE WATER BUILDING SUPPLY FAN A																				
	50.0	41.9	460	0	YES	48.6	58.0	48.6	58.0	YES	48.6	58.0	48.6	58.0	YES	48.6	58.0	48.6	58.0		
XPP00147A	SERVICE WATER PUMP HOUSE SUMP PUMP																				
	1.0	0.8	460	N/A	NO	0.0	0.0	0.0	0.0	NO	0.0	0.0	0.0	0.0	NO	0.0	0.0	0.0	0.0	22	
XRS00002A	SW TRAVELING SCREEN A																				
	1.0	0.8	460	0	NO	0.8	1.0	0.8	1.0	NO	0.8	1.0	0.8	1.0	NO	0.8	1.0	0.8	1.0	22	RN 15-025
XTF09016	RECEPTACLE PANEL 16																				
	10.0	8.5	480	0	N/A	4.3	5.0	4.3	5.0	N/A	4.3	5.0	4.3	5.0	N/A	4.3	5.0	4.3	5.0		
Total Load On Motor Control Center: XMC1EA1X						**76.7**	**88.0**	**76.7**	**88.0**		**76.7**	**88.0**	**76.7**	**88.0**		**76.7**	**88.0**	**76.7**	**88.0**		
XMC1EC1X																					
XRS00002C	SW TRAVELING SCREEN C																				
	1.0	0.8	460	N/A	NO	0.0	0.0	0.0	0.0	NO	0.0	0.0	0.0	0.0	NO	0.0	0.0	0.0	0.0	16,22	RN 15-025
Total Load On Motor Control Center: XMC1EC1X						**0.0**	**0.0**	**0.0**	**0.0**		**0.0**	**0.0**	**0.0**	**0.0**		**0.0**	**0.0**	**0.0**	**0.0**		
XSW1DA																					
MPP00001A	COMPONENT COOLING PUMP A MOTOR																				
	600.0	548.4	6900	15	YES	502.7	550.0	502.7	550.0	YES	502.7	550.0	502.7	550.0	YES	502.7	550.0	502.7	550.0	2,11,30	
MPP00001C	COMPONENT COOLING PUMP C MOTOR																				
	600.0	548.4	6900	N/A	NO	0.0	0.0	0.0	0.0	NO	0.0	0.0	0.0	0.0	NO	0.0	0.0	0.0	0.0	16	
XPP00021A	EMERGENCY FEEDWATER PUMP A																				
	600.0	495.0	6900	20	YES	453.8	550.0	0.0	0.0	YES	453.8	550.0	0.0	0.0	YES	453.8	550.0	0.0	0.0	11	
XPP00038A	REACTOR BUILDING SPRAY PUMP A																				
	400.0	352.0	6900	N/A	YES	352.0	400.0	369.6	420.0	YES	352.0	400.0	352.0	400.0	YES	0.0	0.0	0.0	0.0	3	
XPP00043A	CHARGING/SI PUMP A																				
	900.0	829.8	6900	0	YES	811.4	880.0	811.4	880.0	YES	811.4	880.0	0.0	0.0	YES	682.3	740.0	0.0	0.0	14	
XPP00043C	CHARGING/SI PUMP C																				
	900.0	829.8	6900	N/A	NO	0.0	0.0	0.0	0.0	NO	0.0	0.0	0.0	0.0	NO	0.0	0.0	0.0	0.0	16	
XTF04101	PRESSURIZER HEATERS BACKUP GROUP 1																				
	750.0	750.0	480	N/A	NO	0.0	0.0	0.0	0.0	NO	0.0	0.0	0.0	0.0	NO	537.0	537.0	0.0	0.0	1	
Total Load On Switchgear: XSW1DA						**2119.8**	**2380.0**	**1683.7**	**1850.0**		**2119.8**	**2380.0**	**854.7**	**950.0**		**2175.8**	**2377.0**	**502.7**	**550.0**		

FSAR TABLE 8.3-3 PART A1
Connected Automatic and Manual Loading and Unloading of the Diesel Generator
Channel A

Tag Number		Rated Load Data Hp/kVA	kW	Volts	Load Sequencer (Sec.) (9)	LARGE BREAK LOCA WITH A LOOP Injection Phase - 1/2 to 1 Hour Auto-Start	Load kW	Load kVA	Indefinite Recirc. (8) Load kW	Load kVA	STEAM LINE BREAK WITH A LOOP Short Term Phase - 2 Hours Auto-Start	Load kW	Load kVA	Long Term. (8) Load kW	Load kVA	LOSS OF OFFSITE POWER Hot Standby - 30 Hours Auto-Start	Load kW	Load kVA	Cold Shutdown (8) Load kW	Load kVA	Notes
XSW1DA1																						
APN01DA1	SWITCHGEAR XSW1DA1 DISTRIBUTION PANEL	10.0	8.5	480	0	N/A	7.6	9.0	7.6	9.0	N/A	7.6	9.0	7.6	9.0	N/A	7.6	9.0	7.6	9.0		RN 10-014
XFN00019A	AUXILIARY BUILDING CHARCOAL EXHAUST FAN A	125.0	106.3	460	N/A	NO	0.0	0.0	106.3	125.0	NO	0.0	0.0	106.3	125.0	NO	106.3	125.0	106.3	125.0	1,26	
XFN00019C	AUXILIARY BUILDING CHARCOAL EXHAUST FAN C	125.0	106.3	460	N/A	NO	0.0	0.0	0.0	0.0	NO	0.0	0.0	0.0	0.0	NO	0.0	0.0	0.0	0.0		
XFN00064A MFN00096A	REACTOR BUILDING COOLING UNIT FAN (MFN0096A)	275.0	244.5	460	N/A	NO	0.0	0.0	0.0	0.0	NO	0.0	0.0	0.0	0.0	NO	0.0	0.0	0.0	0.0		
XFN00064A MFN00097A	REACTOR BUILDING COOLING UNIT FAN (MFN0097A)	75.0	58.4	460	25	YES	70.1	90.0	70.1	90.0	YES	70.1	90.0	70.1	90.0	YES	70.1	90.0	70.1	90.0	6,14,27	
XFN00065A MFN00096C	REACTOR BUILDING COOLING UNIT FAN (MFN0096C)	275.0	244.5	460	N/A	NO	0.0	0.0	0.0	0.0	NO	0.0	0.0	0.0	0.0	NO	0.0	0.0	0.0	0.0		
XFN00065A MFN00097C	REACTOR BUILDING COOLING UNIT FAN (MFN0097C)	75.0	58.4	460	N/A	NO	0.0	0.0	0.0	0.0	NO	0.0	0.0	0.0	0.0	NO	0.0	0.0	0.0	0.0	14,27	
XHX00001A	HVAC SYSTEM MECHANICAL WATER CHILLER A	321.0	288.9	460	30	YES	288.9	321.0	288.9	321.0	YES	288.9	321.0	288.9	321.0	YES	288.9	321.0	288.9	321.0	13	
XHX00001C TRAIN A	HVAC SYSTEM MECHANICAL WATER CHILLER C - LOAD FOR TRAIN A	321.0	288.9	460	N/A	NO	0.0	0.0	0.0	0.0	NO	0.0	0.0	0.0	0.0	NO	0.0	0.0	0.0	0.0	16	
XPP00031A	RESIDUAL HEAT REMOVAL PUMP A	300.0	274.2	460	0	YES	260.5	285.0	274.2	300.0	YES	260.5	285.0	260.5	285.0	YES	260.5	285.0	274.2	300.0		
XPP00040A	REACTOR MAKE-UP WATER PUMP A	60.0	51.0	460	N/A	NO	0.0	0.0	0.0	0.0	NO	0.0	0.0	0.0	0.0	NO	0.0	0.0	0.0	0.0		
XPP00045A	SERVICE WATER BOOSTER PUMP A	350.0	322.0	460	35	YES	230.0	250.0	230.0	250.0	YES	230.0	250.0	230.0	250.0	YES	230.0	250.0	0.0	0.0	7,14	
Total Load On Switchgear: XSW1DA1							**857.2**	**955.0**	**977.1**	**1095.0**		**857.2**	**955.0**	**963.4**	**1080.0**		**963.4**	**1080.0**	**747.1**	**845.0**		RN 10-014
XSW1DA2																						
APN01DA2	SWITCHGEAR XSW1DA2 DISTRIBUTION PANEL	10.0	8.5	480	0	N/A	7.6	9.0	7.6	9.0	N/A	7.6	9.0	7.6	9.0	N/A	7.6	9.0	7.6	9.0		
XFN00023A	FUEL BUILDING EXHAUST FAN 23A	60.0	49.9	460	25	YES	46.5	56.0	46.5	56.0	YES	46.5	56.0	46.5	56.0	YES	46.5	56.0	46.5	56.0		
XHR00004A	HYDROGEN RECOMBINER A	75.0	75.0	480	N/A	NO	0.0	0.0	75.0	75.0	NO	0.0	0.0	0.0	0.0	NO	0.0	0.0	0.0	0.0	1,28	
XIT05936 TRAIN A	INCOMING TRAIN A POWER	125.0	125.0	480	0	N/A	105.7	105.7	105.7	105.7	N/A	105.7	105.7	105.7	105.7	N/A	105.7	105.7	105.7	105.7	15	
XPP00032A	SPENT FUEL PIT COOLING PUMP A	75.0	63.0	460	N/A	NO	0.0	0.0	50.4	60.0	NO	0.0	0.0	50.4	60.0	NO	50.4	60.0	50.4	60.0	1,29	
XPP00048A	CHILLED WATER PUMP A	60.0	55.8	460	10	YES	44.6	48.0	44.6	48.0	YES	44.6	48.0	44.6	48.0	YES	44.6	48.0	44.6	48.0	13	
XPP00048C TRAIN A	CHILLED WATER PUMP C - LOAD FOR TRAIN A	50.0	46.0	460	N/A	NO	0.0	0.0	0.0	0.0	NO	0.0	0.0	0.0	0.0	NO	0.0	0.0	0.0	0.0	16	
Total Load On Switchgear: XSW1DA2							**204.5**	**218.7**	**329.9**	**353.7**		**204.5**	**218.7**	**254.9**	**278.7**		**254.9**	**278.7**	**254.9**	**278.7**		

FSAR TABLE 8.3-3 PART A1
Connected Automatic and Manual Loading and Unloading of the Diesel Generator
Channel A

Tag Number	Rated Load Data Hp/kVA	kW	Volts	Load Sequencer (Sec.) (9)	LARGE BREAK LOCA WITH A LOOP: Injection Phase - 1/2 to 1 Hour Auto-Start	Load kW	Load kVA	Indefinite Recirc. (8) Load kW	Load kVA	STEAM LINE BREAK WITH A LOOP: Short Term Phase - 2 Hours Auto-Start	Load kW	Load kVA	Long Term. (8) Load kW	Load kVA	LOSS OF OFFSITE POWER: Hot Standby - 30 Hours Auto-Start	Load kW	Load kVA	Cold Shutdown (8) Load kW	Load kVA	Notes
XSW1EA																				
MPP00039A	SERVICE WATER PUMP A MOTOR																			
	700.0	645.4	6900	10	YES	599.3	650.0	599.3	650.0	YES	599.3	650.0	599.3	650.0	YES	599.3	650.0	599.3	650.0	12
MPP00039C TRAIN A	SERVICE WATER PUMP C MOTOR - LOAD FOR TRAIN A																			
	700.0	645.4	6900	N/A	NO	0.0	0.0	0.0	0.0	NO	0.0	0.0	0.0	0.0	NO	0.0	0.0	0.0	0.0	16
Total Load On Switchgear: XSW1EA						**599.3**	**650.0**	**599.3**	**650.0**		**599.3**	**650.0**	**599.3**	**650.0**		**599.3**	**650.0**	**599.3**	**650.0**	
XSW1EA1																				
APN01EA1	SWITCHGEAR XSW1EA1 DISTRIBUTION PANEL																			
	10.0	8.5	480	0	N/A	7.6	9.0	7.6	9.0	N/A	7.6	9.0	7.6	9.0	N/A	7.6	9.0	7.6	9.0	
Total Load On Switchgear: XSW1EA1						**7.6**	**9.0**	**7.6**	**9.0**		**7.6**	**9.0**	**7.6**	**9.0**		**7.6**	**9.0**	**7.6**	**9.0**	
Subtotal Load On The Diesel Generator:						**4313.4**	**4832.9**	**4163.4**	**4624.0**		**4313.4**	**4832.9**	**3242.1**	**3629.5**		**4559.5**	**5052.9**	**2637.3**	**2950.1**	
Cable Losses:						10.0	10.0	10.0	10.0		10.0	10.0	10.0	10.0		10.0	10.0	10.0	10.0	
Transformer Losses:						38.0	38.0	38.0	38.0		38.0	38.0	38.0	38.0		38.0	38.0	38.0	38.0	
Generator Exciter Load:						29.0	34.0	29.0	34.0		29.0	34.0	29.0	34.0		29.0	34.0	29.0	34.0	RN 10-014
Total Generator Load With Optional Loads:						**4390.4**	**4914.9**	**4240.4**	**4706.0**		**4390.4**	**4914.9**	**3319.1**	**3711.5**		**4636.5**	**5134.9**	**2714.3**	**3032.1**	**10**
Optional Loads:						0.0	0.0	571.3	639.5		0.0	0.0	495.0	563.0		1032.0	1100.0	495.0	563.0	
Total Generator Load Without Optional Loads:						**4390.3**	**4914.9**	**3669.1**	**4066.4**		**4390.3**	**4914.9**	**2824.1**	**3148.5**		**3604.5**	**4034.9**	**2219.3**	**2469.1**	

Total Records Printed: 92

FSAR TABLE 8.3-3 PART A1
Connected Automatic and Manual Loading and Unloading of the Diesel Generator
Channel A

Notes:

1 This is an optional load which can be started manually. It may be added if the DG loading conditions permit, and this load was not considered for fuel oil storage requirements since it is not a required load.
2 The pump is normally in low speed but is assumed to be auto-started in high speed. The speed change switch is manually operated. The pump will be operated in high speed for approximately 8 hours for the first 7 days following a DBE. If both DGs are running, only one train's pump will be in high speed during the plant shutdown.
3 The pump starts on receipt of a spray initiation signal.
4 The motor is not required for the accident scenarios but the motor will be running as it is not locked out by the load sequencer.
5 The motor is running in the Hot Standby scenario as the SWBP is automatically started by the load sequencer.
6 The motor is not required for the LOOP - Hot standby / Cold shutdown scenarios but is auto started by the load sequencer and expected to remain on for air circulation related purposes.
7 The motor is not required for the LOOP - Hot standby scenario but is auto started by the load sequencer.
8 The equipment is required to be operable for six months following an accident.
9 Time 0 indicates the emergency diesel generator has started and reached no load speed and voltage, at which the circuit breaker connecting to the 7200 volt bus has closed.
10 Total includes the RHR pump and all manual loads whose application will be limited so that neither the 2 hour rating (4676 kW) is exceeded for more than 2 hours nor the continuous rating of 4250 kW is exceeded.
11 The required safety function is for emergency core cooling.
12 The required safety function is for emergency core cooling and containment cooling.
13 The required safety function is for equipment area cooling.
14 The required safety function is for containment cooling.
15 This inverter is assumed to be running on this diesel generator. It is fed via a manual switchgear breaker.
16 The "C" train equipment is assumed to be not running as the normal train equipment is running.
17 This equipment is assumed to be supplied from this diesel generator.
18 Generator efficiency is assumed to be taken into account by the diesel manufacturer as the load limit is based on generator output kW (including the exciter) as monitored at the MCB.
19 The dc powered oil pumps associated with the turning gear are included in the battery charger loads.
20 For the Auto-Start columns, YES means the load is able to automatically start based on its control circuitry, NO means it does not, and N/A means the load is continuous and not subject to starting and stopping.
21 The normal battery charger is assumed in service.
22 The load is locked out on receipt of an SI signal.
23 The fan runs only when the EFWP is running.
24 The compressor runs only to recharge the air start system. It is assumed to be running in the first hour only.
25 XTG00001 will be running less than 24 hours total during the 7 days following a DBE.
26 The fan is expected to be manually started within the first 30 hours and is therefore shown as a load for the LOOP/Hot Standby mode.
27 Only 1 out of 2 RBCU fans is required to run post accident as selected.
28 The H2 recombiner will be operated as needed to support post accident response.
29 The pump will be operated as needed to maintain spent fuel pool temperatures within acceptable limits.
30 The component cooling water pump slow speed ratings are 250hp, .8094 PF, .9114 Efficiency, and 250kVA.

FSAR TABLE 8.3-3 PART A2
BASIS FOR DIESEL GENERATOR FUEL OIL CONSUMPTION
Connected Automatic and Manual Loading and Unloading of the Diesel Generator
Channel A

Tag Number	Rated Load Data: Hp/kVA / Volts	kVA / kW	PF / Eff	(9) Load Seq (Sec.)	(20) Auto Start	LARGE BREAK LOCA WITH A LOOP — Injection Phase - 1/2 to 1 Hour: (31) Bhp/kVA	(32) kW	(33) kVA	LARGE BREAK LOCA WITH A LOOP — Indefinite Recirc. (8): (31) Bhp/kVA	(32) kW	(33) kVA	STEAM LINE BREAK WITH A LOOP — Short Term Phase - 2 Hours: (31) Bhp/kVA	(32) kW	(33) kVA	STEAM LINE BREAK WITH A LOOP — Long Term. (8): (31) Bhp/kVA	(32) kW	(33) kVA	LOSS OF OFFSITE POWER — Hot Standby - 30 Hours: (31) Bhp/kVA	(32) kW	(33) kVA	LOSS OF OFFSITE POWER — Cold Shutdown (8): (31) Bhp/kVA	(32) kW	(33) kVA	Notes
XMC1B1X																										
XTG00001	TURBINE TURNING GEAR																									
	60.0	57.0	0.870	N/A	NO	0.0	0.0	0.0	63.0	52.0	59.8	0.0	0.0	0.0	63.0	52.0	59.8	63.0	52.0	59.8	63.0	52.0	59.8	1,25
	460	49.6	0.903																					
Total Load On Motor Control Center: XMC1B1X							**0.0**	**0.0**		**52.0**	**59.8**		**0.0**	**0.0**		**52.0**	**59.8**		**52.0**	**59.8**		**52.0**	**59.8**	
XMC1DA2X																								
APN08004A	LIGHTING PANEL #4, ESSENTIAL PANEL, TRAIN A																							
	10.0	10.0	0.850	0	N/A	4.0	3.4	4.0	4.0	3.4	4.0	4.0	3.4	4.0	4.0	3.4	4.0	4.0	3.4	4.0	4.0	3.4	4.0	
	480	8.5																						
APN08012A	LIGHTING PANEL #13, ESSENTIAL PANEL, TRAIN A																							
	30.0	30.0	0.850	0	N/A	27.0	22.9	27.0	27.0	22.9	27.0	27.0	22.9	27.0	27.0	22.9	27.0	2.0	1.7	2.0	27.0	22.9	27.0	
	480	25.5																						
APN08034	LIGHTING PANEL #34, ESSENTIAL PANEL																							
	65.0	65.0	0.850	0	N/A	18.0	15.3	18.0	18.0	15.3	18.0	18.0	15.3	18.0	18.0	15.3	18.0	18.0	15.3	18.0	18.0	15.3	18.0	
	480	55.3																						
APN08035A	LIGHTING PANEL #35, ESSENTIAL PANEL (TRAIN A POWER FEED)																							
	10.0	10.0	0.850	0	N/A	5.0	4.3	5.0	5.0	4.3	5.0	5.0	4.3	5.0	5.0	4.3	5.0	5.0	4.3	5.0	5.0	4.3	5.0	
	480	8.5																						
APN08053A	ESSENTIAL OUTDOOR LTG. PNL A																							
	49.0	49.0	0.850	0	N/A	49.0	41.6	49.0	49.0	41.6	49.0	49.0	41.6	49.0	49.0	41.6	49.0	49.0	41.6	49.0	49.0	41.6	49.0	
	480	41.6																						
XBC1A	DC 1A BATTERY CHARGER																							
	43.3	43.3	0.750	0	N/A	10.1	7.6	10.1	10.1	7.6	10.1	10.1	7.6	10.1	10.1	7.6	10.1	10.1	7.6	10.1	10.1	7.6	10.1	
	480	32.5																						
XFN00026	CONTROLLED ACCESS COOLING SUPPLY FAN MOTOR																							
	15.0	15.2	0.850	N/A	NO	0.0	0.0	0.0	0.0	0.0	0.0	0.0	0.0	0.0	0.0	0.0	0.0	0.0	0.0	0.0	0.0	0.0	0.0	22
	460	12.9	0.865																					
XFN00028A	CONTROLLED ACCESS EXHAUST FAN A																							
	50.0	48.5	0.850	N/A	NO	0.0	0.0	0.0	0.0	0.0	0.0	0.0	0.0	0.0	0.0	0.0	0.0	0.0	0.0	0.0	0.0	0.0	0.0	22
	460	41.3	0.904																					
XFN00030A	CONT RM EMERGENCY FILTERING SYS FAN A																							
	40.0	39.3	0.828	0	YES	40.0	32.5	39.3	40.0	32.5	39.3	40.0	32.5	39.3	40.0	32.5	39.3	40.0	32.5	39.3	0.0	0.0	0.0	
	460	32.5	0.918																					
XFN00032A	CONTROL ROOM COOLING UNIT A FAN																							
	25.0	25.5	0.830	0	YES	18.0	15.3	18.4	18.0	15.3	18.4	18.0	15.3	18.4	18.0	15.3	18.4	18.0	15.3	18.4	18.0	15.3	18.4	
	460	21.2	0.880																					
XFN00036A	RELAY ROOM SUPPLY FAN A																							
	15.0	15.6	0.830	0	YES	11.0	9.5	11.4	11.0	9.5	11.4	11.0	9.5	11.4	11.0	9.5	11.4	11.0	9.5	11.4	11.0	9.5	11.4	
	460	12.9	0.865																					
XFN00038A	BATT&CHG RM AIR HANDLING UNIT A SUP FAN																							
	10.0	10.7	0.820	0	YES	7.0	6.1	7.5	7.0	6.1	7.5	7.0	6.1	7.5	7.0	6.1	7.5	7.0	6.1	7.5	7.0	6.1	7.5	
	460	8.8	0.850																					

FSAR TABLE 8.3-3 PART A2
BASIS FOR DIESEL GENERATOR FUEL OIL CONSUMPTION
Connected Automatic and Manual Loading and Unloading of the Diesel Generator
Channel A

Tag Number	Rated Load Data: Hp/kVA / Volts	kVA / kW	PF / Eff	(9) Load Seq (Sec.)	(20) Auto Start	LARGE BREAK LOCA WITH A LOOP — Injection Phase - 1/2 to 1 Hour: (31) Bhp/kVA	(32) kW	(33) kVA	LARGE BREAK LOCA WITH A LOOP — Indefinite Recirc. (8): (31) Bhp/kVA	(32) kW	(33) kVA	STEAM LINE BREAK WITH A LOOP — Short Term Phase - 2 Hours: (31) Bhp/kVA	(32) kW	(33) kVA	STEAM LINE BREAK WITH A LOOP — Long Term. (8): (31) Bhp/kVA	(32) kW	(33) kVA	LOSS OF OFFSITE POWER — Hot Standby - 30 Hours: (31) Bhp/kVA	(32) kW	(33) kVA	LOSS OF OFFSITE POWER — Cold Shutdown (8): (31) Bhp/kVA	(32) kW	(33) kVA	Notes
XMC1DA2X (Continued)																									
XFN00039A	BATTERY ROOM EXHAUST FAN A																								
	5.0	5.5	0.850	0	YES	0.6	0.6	0.7	0.6	0.6	0.7	0.6	0.6	0.7	0.6	0.6	0.7	0.6	0.6	0.7	0.6	0.6	0.7	
	460	4.7	0.800																						
XFN00041A	COMPUTER ROOM SUPPLY FAN A (UNIT 1)																								
	5.0	5.3	0.850	N/A	NO	0.0	0.0	0.0	0.0	0.0	0.0	0.0	0.0	0.0	0.0	0.0	0.0	0.0	0.0	0.0	0.0	0.0	0.0	22
	460	4.5	0.831																						
XFN00050	ESF SWGR ROOM 1DA AH UNIT SUPPLY FAN																								
	25.0	25.5	0.830	0	YES	9.0	7.6	9.2	9.0	7.6	9.2	9.0	7.6	9.2	9.0	7.6	9.2	9.0	7.6	9.2	9.0	7.6	9.2	
	460	21.2	0.880																						
XFN00055	CONTROL ACCESS LAB HOOD SUPPLY FAN																								
	5.0	5.3	0.850	N/A	NO	0.0	0.0	0.0	0.0	0.0	0.0	0.0	0.0	0.0	0.0	0.0	0.0	0.0	0.0	0.0	0.0	0.0	0.0	22
	460	4.5	0.831																						
XFN00081A	SW BSTR PUMP AREA AH UNIT A SUPPLY FAN																								
	3.0	3.7	0.760	0	YES	3.0	2.8	3.7	3.0	2.8	3.7	3.0	2.8	3.7	3.0	2.8	3.7	3.0	2.8	3.7	0.0	0.0	0.0	5
	460	2.8	0.799																						
XFN00083A	EMER FW PUMP AREA AH UNIT A SUPPLY FAN																								
	5.0	6.2	0.720	0	YES	3.0	2.7	3.7	0.0	0.0	0.0	3.0	2.7	3.7	0.0	0.0	0.0	3.0	2.7	3.7	0.0	0.0	0.0	23
	460	4.5	0.831																						
XFN00087A	CONTROLLED ACCESS LAB HOOD EXHAUST FAN A																								
	5.0	5.3	0.850	N/A	NO	0.0	0.0	0.0	0.0	0.0	0.0	0.0	0.0	0.0	0.0	0.0	0.0	0.0	0.0	0.0	0.0	0.0	0.0	22
	460	4.5	0.831																						
XFN00106A	SPEED SWITCH ROOMS AH UNIT A SUPPLY FAN																								
	10.0	10.7	0.820	0	YES	7.0	6.1	7.5	7.0	6.1	7.5	7.0	6.1	7.5	7.0	6.1	7.5	7.0	6.1	7.5	7.0	6.1	7.5	
	460	8.8	0.850																						
XHX00001A CNTRL PWR	HVAC SYSTEM MECHANICAL WATER CHILLER A																								
	15.0	15.0	0.850	0	N/A	7.5	6.4	7.5	7.5	6.4	7.5	7.5	6.4	7.5	7.5	6.4	7.5	7.5	6.4	7.5	7.5	6.4	7.5	
	480	12.8																							
XHX00001C CNTRL PWR	HVAC SYSTEM MECH. WATER CHILLER C CHANNEL A																								
	15.0	15.0	0.850	0	N/A	7.5	6.4	7.5	7.5	6.4	7.5	7.5	6.4	7.5	7.5	6.4	7.5	7.5	6.4	7.5	7.5	6.4	7.5	
	480	12.8																							
XTF09005A	RECEPTACLE TRANSFORMER #5																								
	10.0	10.0	0.850	0	N/A	5.0	4.3	5.0	5.0	4.3	5.0	5.0	4.3	5.0	5.0	4.3	5.0	5.0	4.3	5.0	5.0	4.3	5.0	
	480	8.5																							
XTF1FA	XFMR FOR 120V AC NSSS INSTR. MAIN DISTR. PNL 1FA																								
	25.0	25.0	0.850	0	N/A	8.3	7.1	8.3	8.3	7.1	8.3	8.3	7.1	8.3	8.3	7.1	8.3	8.3	7.1	8.3	8.3	7.1	8.3	
	480	21.3																							
Total Load On Motor Control Center: XMC1DA2X							**202.4**	**242.8**		**199.8**	**239.1**		**202.4**	**242.8**		**199.8**	**239.1**		**181.2**	**217.8**		**164.5**	**196.1**	

FSAR TABLE 8.3-3 PART A2
BASIS FOR DIESEL GENERATOR FUEL OIL CONSUMPTION
Connected Automatic and Manual Loading and Unloading of the Diesel Generator
Channel A

Tag Number	Rated Load Data: Hp/kVA / kVA / PF / Volts / kW / Eff	(9) Load Seq (Sec.)	(20) Auto Start	LARGE BREAK LOCA WITH A LOOP: Injection Phase - 1/2 to 1 Hour (31) Bhp/kVA	(32) kW	(33) kVA	LARGE BREAK LOCA WITH A LOOP: Indefinite Recirc. (8) (31) Bhp/kVA	(32) kW	(33) kVA	STEAM LINE BREAK WITH A LOOP: Short Term Phase - 2 Hours (31) Bhp/kVA	(32) kW	(33) kVA	STEAM LINE BREAK WITH A LOOP: Long Term. (8) (31) Bhp/kVA	(32) kW	(33) kVA	LOSS OF OFFSITE POWER: Hot Standby - 30 Hours (31) Bhp/kVA	(32) kW	(33) kVA	LOSS OF OFFSITE POWER: Cold Shutdown (8) (31) Bhp/kVA	(32) kW	(33) kVA	Notes
XMC1DA2Y																								
IRM00003	RADIATION MONITORING MAIN PLANT VENT EXHAUST PUMP 1																							
	1.0 1.3 0.750	0	YES	1.0	1.0	1.3	1.0	1.0	1.3	1.0	1.0	1.3	1.0	1.0	1.3	1.0	1.0	1.3	1.0	1.0	1.3	4
	460 1.0 0.765																							
IRM00004	RADIATION MONITORING REACTOR BUILDING PURGE EXHAUST PUMP																							
	1.0 1.3 0.750	0	YES	1.0	1.0	1.3	1.0	1.0	1.3	1.0	1.0	1.3	1.0	1.0	1.3	1.0	1.0	1.3	1.0	1.0	1.3	4
	460 1.0 0.765																							
XBC1A-1B TRAIN A	DC 1A-1B BACKUP BATTERY CHRG																							
	43.3 43.3 0.750	N/A	NO	0.0	0.0	0.0	0.0	0.0	0.0	0.0	0.0	0.0	0.0	0.0	0.0	0.0	0.0	0.0	0.0	0.0	0.0	21
	480 32.5																							
XBC1X	BATTERY CHARGER 1X																							
	86.7 86.7 0.750	0	N/A	50.2	37.7	50.2	50.2	37.7	50.2	50.2	37.7	50.2	50.2	37.7	50.2	50.2	37.7	50.2	50.2	37.7	50.2	19
	480 65.0																							
XFN00046A	CHARGING/SI PUMP RM 1 COOLING UNIT FAN																							
	3.0 3.7 0.760	0	YES	3.0	2.8	3.7	3.0	2.8	3.7	3.0	2.8	3.7	0.0	0.0	0.0	3.0	2.8	3.7	0.0	0.0	0.0	
	460 2.8 0.799																							
XFN00049A	RHR/SPRAY PUMP ROOM 1 COOLING UNIT FAN																							
	3.0 3.7 0.760	0	YES	3.0	2.8	3.7	3.0	2.8	3.7	3.0	2.8	3.7	3.0	2.8	3.7	3.0	2.8	3.7	3.0	2.8	3.7	
	460 2.8 0.799																							
XFN00132	AUX BLDG MCC-SWGR ROOM COOLING UNIT FAN																							
	3.0 3.7 0.760	0	YES	2.0	1.9	2.5	2.0	1.9	2.5	2.0	1.9	2.5	2.0	1.9	2.5	2.0	1.9	2.5	2.0	1.9	2.5	
	460 2.8 0.799																							
XIT05901	INSTRUMENT SUPPLY INVERTERS																							
	10.0 10.0 0.850	0	N/A	7.9	6.7	7.9	7.9	6.7	7.9	7.9	6.7	7.9	7.9	6.7	7.9	7.9	6.7	7.9	7.9	6.7	7.9	
	480 8.5																							
XIT05902	INSTRUMENT SUPPLY INVERTERS																							
	10.0 10.0 0.850	0	N/A	4.8	4.1	4.8	4.8	4.1	4.8	4.8	4.1	4.8	4.8	4.1	4.8	4.8	4.1	4.8	4.8	4.1	4.8	
	480 8.5																							
XMC1DA2Y HTR	SPACE HTRS FOR XMC1DA2Y																							
	3.4 3.4 1.000	N/A	N/A	3.4	3.4	3.4	3.4	3.4	3.4	3.4	3.4	3.4	3.4	3.4	3.4	3.4	3.4	3.4	3.4	3.4	3.4	
	480 3.4																							
XPN00040 TRAIN A	PUMP AUXILIARIES TRANSFER PNL-XPP0043C																							
	5.0 5.0 0.850	0	YES	1.0	0.8	1.0	1.0	0.8	1.0	1.0	0.8	1.0	1.0	0.8	1.0	1.0	0.8	1.0	1.0	0.8	1.0	17
	480 4.3																							
XPN02023	REFLING WTR STRGE TNK & PIPNG HEAT TRACNG CNTRALZED CONT PAN																							RN 12-006
	30.0 30.0 1.000	0	YES	25.5	25.5	25.5	25.5	25.5	25.5	25.5	25.5	25.5	25.5	25.5	25.5	25.5	25.5	25.5	25.5	25.5	25.5	
	480 30.0																							
XPN02007	REAC MU WTR STRGE TANK&PIPING HEAT TRACING CENTRLZD CONTROL																							
	20.0 20.0 1.000	0	YES	17.0	17.0	17.0	17.0	17.0	17.0	17.0	17.0	17.0	17.0	17.0	17.0	17.0	17.0	17.0	17.0	17.0	17.0	
	480 20.0																							
XPN02021	SODIUM HYDROXIDE SPRAY SYSTEM HEAT TRACING CENTRLZD CONRL P																							RN 12-006
	3.0 3.0 1.000	0	YES	0.0	0.0	0.0	0.0	0.0	0.0	0.0	0.0	0.0	0.0	0.0	0.0	0.0	0.0	0.0	0.0	0.0	0.0	
	480 3.0																							
XPN07215A 480V PWR	POST ACCIDENT ANALYZER SYSTEM																							
	1.5 1.5 0.850	0	N/A	0.0	0.0	0.0	1.5	1.3	1.5	0.0	0.0	0.0	0.0	0.0	0.0	0.0	0.0	0.0	0.0	0.0	0.0	1
	480 1.3																							

FSAR TABLE 8.3-3 PART A2
BASIS FOR DIESEL GENERATOR FUEL OIL CONSUMPTION
Connected Automatic and Manual Loading and Unloading of the Diesel Generator
Channel A

		Rated Load Data			(9)		LARGE BREAK LOCA WITH A LOOP						STEAM LINE BREAK WITH A LOOP						LOSS OF OFFSITE POWER						
							Injection Phase - 1/2 to 1 Hour			Indefinite Recirc. (8)			Short Term Phase - 2 Hours			Long Term. (8)			Hot Standby - 30 Hours			Cold Shutdown (8)			
		Hp/kVA	kVA	PF	Load Seq	(20) Auto	(31) Bhp/kVA	(32) kW	(33) kVA	(31) Bhp/kVA	(32) kW	(33) kVA	(31) Bhp/kVA	(32) kW	(33) kVA	(31) Bhp/kVA	(32) kW	(33) kVA	(31) Bhp/kVA	(32) kW	(33) kVA	(31) Bhp/kVA	(32) kW	(33) kVA	
Tag Number		Volts	kW	Eff	(Sec.)	Start																			Notes
XMC1DA2Y (Continued)																									
XPP00013A	BORIC ACID PUMPS																								
		15.5	15.7	0.850	0	NO	0.0	0.0	0.0	0.0	0.0	0.0	0.0	0.0	0.0	0.0	0.0	0.0	0.0	0.0	0.0	0.0	0.0	0.0	
		460	13.4	0.865																					
XPP00043A PP AUX OIL	CHARGING/SI PUMP A AUXILIARY OIL PUMP ALOP1																								
		2.0	2.2	0.850	0	YES	1.4	1.3	1.5	1.4	1.3	1.5	1.4	1.3	1.5	1.4	1.3	1.5	1.4	1.3	1.5	0.0	0.0	0.0	
		460	1.8	0.808																					
XTF04006	SECURITY SYSTEM TRANSFER SWITCH (FEEDS XTF05014)																								
		37.5	37.5	0.850	0	N/A	30.0	25.5	30.0	30.0	25.5	30.0	30.0	25.5	30.0	30.0	25.5	30.0	30.0	25.5	30.0	30.0	25.5	30.0	17
		480	31.9																						
XTF05032	480/240/120V XFMR FOR METEOROLOGICAL TOWER																								
		6.0	6.0	0.850	0	N/A	5.4	4.6	5.4	5.4	4.6	5.4	5.4	4.6	5.4	5.4	4.6	5.4	5.4	4.6	5.4	5.4	4.6	5.4	
		480	5.1																						
XTF08023A	XFMR FOR LIGHTING PANEL 23, ESSENTIAL PANEL, TRAIN A																								
		15.0	15.0	0.850	0	N/A	9.0	7.6	9.0	9.0	7.6	9.0	9.0	7.6	9.0	9.0	7.6	9.0	9.0	7.6	9.0	9.0	7.6	9.0	
		480	12.8																						
Total Load On Motor Control Center: XMC1DA2Y								**143.7**	**168.2**		**145.0**	**169.7**		**143.7**	**168.2**		**140.9**	**164.5**		**143.7**	**168.2**		**139.6**	**163.0**	
XMC1DA2Z																									
APN08037A	LIGHTING PANEL #37, ESSENTIAL PANEL																								
		45.0	45.0	0.850	0	N/A	3.0	2.5	3.0	3.0	2.5	3.0	3.0	2.5	3.0	3.0	2.5	3.0	3.0	2.5	3.0	3.0	2.5	3.0	
		480	38.3																						
XAC00008A	AIR STARTING PACKAGE - DIESEL GEN.																								
		15.0	15.2	0.850	0	YES	15.5	13.4	15.7	0.0	0.0	0.0	15.5	13.4	15.7	0.0	0.0	0.0	15.5	13.4	15.7	0.0	0.0	0.0	24
		460	12.9	0.865																					
XAC00008B	AIR STARTING PACKAGE - DIESEL GEN.																								
		15.0	15.2	0.850	0	NO	0.0	0.0	0.0	0.0	0.0	0.0	0.0	0.0	0.0	0.0	0.0	0.0	0.0	0.0	0.0	0.0	0.0	0.0	
		460	12.9	0.865																					
XFN00075A	DG AREA A VENTILATION AIR SUPPLY FAN A																								
		30.0	30.4	0.824	0	YES	25.0	20.9	25.3	25.0	20.9	25.3	25.0	20.9	25.3	25.0	20.9	25.3	25.0	20.9	25.3	25.0	20.9	25.3	
		460	25.0	0.894																					
XFN00075B	DG AREA A VENTILATION AIR SUPPLY FAN B																								
		30.0	30.4	0.824	0	YES	25.0	20.9	25.3	25.0	20.9	25.3	25.0	20.9	25.3	25.0	20.9	25.3	25.0	20.9	25.3	25.0	20.9	25.3	
		460	25.0	0.894																					
XMC1DA2Z HTR	SPACE HTRS FOR XMC1DA2Z																								
		0.7	0.7	1.000	N/A	N/A	0.7	0.7	0.7	0.7	0.7	0.7	0.7	0.7	0.7	0.7	0.7	0.7	0.7	0.7	0.7	0.7	0.7	0.7	
		480	0.7																						
XPN00047	NO. 1A DIESEL POWER PANEL																								
		56.0	56.0	0.850	0	N/A	56.0	47.6	56.0	56.0	47.6	56.0	56.0	47.6	56.0	56.0	47.6	56.0	56.0	47.6	56.0	56.0	47.6	56.0	
		480	47.6																						
XPP00004A	DG FUEL OIL TRANSFER PUMP 4A																								
		1.0	1.4	0.720	0	YES	0.6	0.6	0.8	0.6	0.6	0.8	0.6	0.6	0.8	0.6	0.6	0.8	0.6	0.6	0.8	0.6	0.6	0.8	
		460	1.0	0.765																					
XPP00141A	DG FUEL OIL TRANSFER PUMP 141A																								
		1.0	1.4	0.720	0	YES	0.6	0.6	0.8	0.6	0.6	0.8	0.6	0.6	0.8	0.6	0.6	0.8	0.6	0.6	0.8	0.6	0.6	0.8	
		460	1.0	0.765																					

FSAR TABLE 8.3-3 PART A2
BASIS FOR DIESEL GENERATOR FUEL OIL CONSUMPTION
Connected Automatic and Manual Loading and Unloading of the Diesel Generator
Channel A

Tag Number	Rated Load Data: Hp/kVA / Volts	kVA / kW	PF / Eff	(9) Load Seq (Sec.)	(20) Auto Start	LARGE BREAK LOCA WITH A LOOP — Injection Phase - 1/2 to 1 Hour: (31) Bhp/kVA	(32) kW	(33) kVA	LARGE BREAK LOCA WITH A LOOP — Indefinite Recirc. (8): (31) Bhp/kVA	(32) kW	(33) kVA	STEAM LINE BREAK WITH A LOOP — Short Term Phase - 2 Hours: (31) Bhp/kVA	(32) kW	(33) kVA	STEAM LINE BREAK WITH A LOOP — Long Term. (8): (31) Bhp/kVA	(32) kW	(33) kVA	LOSS OF OFFSITE POWER — Hot Standby - 30 Hours: (31) Bhp/kVA	(32) kW	(33) kVA	LOSS OF OFFSITE POWER — Cold Shutdown (8): (31) Bhp/kVA	(32) kW	(33) kVA	Notes	
XMC1DA2Z (Continued)																										
XPP00146A	DIESEL GENERATOR BLDG SUMP PUMP																									
	2.0	2.2	0.850	0	NO	0.0	0.0	0.0	0.0	0.0	0.0	0.0	0.0	0.0	0.0	0.0	0.0	0.0	0.0	0.0	0.0	0.0	0.0	22	
	460	1.8	0.808																						
Total Load On Motor Control Center: XMC1DA2Z							**107.1**	**127.7**		**93.8**	**112.0**		**107.1**	**127.7**		**93.8**	**112.0**		**107.1**	**127.7**		**93.8**	**112.0**		
XMC1EA1X																										
APN04006	SW BLDG POWER PANEL 1																									
	60.0	60.0	1.000	0	N/A	17.0	17.0	17.0	17.0	17.0	17.0	17.0	17.0	17.0	17.0	17.0	17.0	17.0	17.0	17.0	17.0	17.0	17.0		
	480	60.0																							
APN08031A	LIGHTING PANEL 31, ESSENTIAL PANEL, TRAIN A POWER FEED																									
	10.0	10.0	0.850	0	N/A	7.0	6.0	7.0	7.0	6.0	7.0	7.0	6.0	7.0	7.0	6.0	7.0	7.0	6.0	7.0	7.0	6.0	7.0		
	480	8.5																							
XFN00080A	SERVICE WATER BUILDING SUPPLY FAN A																									
	50.0	48.6	0.838	0	YES	58.0	47.2	56.4	58.0	47.2	56.4	58.0	47.2	56.4	58.0	47.2	56.4	58.0	47.2	56.4	58.0	47.2	56.4		
	460	40.7	0.916																						
XPP00147A	SERVICE WATER PUMP HOUSE SUMP PUMP																									
	1.0	1.1	0.850	N/A	NO	0.0	0.0	0.0	0.0	0.0	0.0	0.0	0.0	0.0	0.0	0.0	0.0	0.0	0.0	0.0	0.0	0.0	0.0	22	
	460	1.0	0.765																						
XRS00002A	SW TRAVELING SCREEN A																									
	1.0	1.1	0.850	0	NO	1.0	1.0	1.1	1.0	1.0	1.1	1.0	1.0	1.1	1.0	1.0	1.1	1.0	1.0	1.1	1.0	1.0	1.1	22	RN 15-025
	460	1.0	0.765																						
XTF09016	RECEPTACLE PANEL 16																									
	10.0	10.0	0.850	0	N/A	5.0	4.3	5.0	5.0	4.3	5.0	5.0	4.3	5.0	5.0	4.3	5.0	5.0	4.3	5.0	5.0	4.3	5.0		
	480	8.5																							
Total Load On Motor Control Center: XMC1EA1X							**75.4**	**86.5**		**75.4**	**86.5**		**75.4**	**86.5**		**75.4**	**86.5**		**75.4**	**86.5**		**75.4**	**86.5**		
XMC1EC1X																										
XRS00002C	SW TRAVELING SCREEN C																									
	1.0	1.1	0.850	N/A	NO	0.0	0.0	0.0	0.0	0.0	0.0	0.0	0.0	0.0	0.0	0.0	0.0	0.0	0.0	0.0	0.0	0.0	0.0	16,22	RN 15-025
	460	1.0	0.765																						
Total Load On Motor Control Center: XMC1EC1X							**0.0**	**0.0**		**0.0**	**0.0**		**0.0**	**0.0**		**0.0**	**0.0**		**0.0**	**0.0**		**0.0**	**0.0**		

FSAR TABLE 8.3-3 PART A2
BASIS FOR DIESEL GENERATOR FUEL OIL CONSUMPTION
Connected Automatic and Manual Loading and Unloading of the Diesel Generator
Channel A

Tag Number	Rated Load Data: Hp/kVA / Volts	kVA / kW	PF / Eff	(9) Load Seq (Sec.)	(20) Auto Start	LARGE BREAK LOCA WITH A LOOP — Injection Phase - 1/2 to 1 Hour: (31) Bhp/kVA	(32) kW	(33) kVA	LARGE BREAK LOCA WITH A LOOP — Indefinite Recirc. (8): (31) Bhp/kVA	(32) kW	(33) kVA	STEAM LINE BREAK WITH A LOOP — Short Term Phase - 2 Hours: (31) Bhp/kVA	(32) kW	(33) kVA	STEAM LINE BREAK WITH A LOOP — Long Term. (8): (31) Bhp/kVA	(32) kW	(33) kVA	LOSS OF OFFSITE POWER — Hot Standby - 30 Hours: (31) Bhp/kVA	(32) kW	(33) kVA	LOSS OF OFFSITE POWER — Cold Shutdown (8): (31) Bhp/kVA	(32) kW	(33) kVA	Notes
XSW1DA																									
MPP00001A	COMPONENT COOLING PUMP A MOTOR																								
	600.0	535.6	0.914	15	YES	550.0	448.8	491.0	550.0	448.8	491.0	550.0	448.8	491.0	550.0	448.8	491.0	550.0	448.8	491.0	550.0	448.8	491.0	2,11,30
	6900	489.6	0.914																					
MPP00001C	COMPONENT COOLING PUMP C MOTOR																								
	600.0	535.6	0.914	N/A	NO	0.0	0.0	0.0	0.0	0.0	0.0	0.0	0.0	0.0	0.0	0.0	0.0	0.0	0.0	0.0	0.0	0.0	0.0	16
	6900	489.6	0.914																					
XPP00021A	EMERGENCY FEEDWATER PUMP A																								
	600.0	587.8	0.825	20	YES	550.0	444.5	538.8	0.0	0.0	0.0	550.0	444.5	538.8	0.0	0.0	0.0	550.0	444.5	538.8	0.0	0.0	0.0	11
	6900	484.9	0.923																					
XPP00038A	REACTOR BUILDING SPRAY PUMP A																								
	400.0	367.0	0.880	N/A	YES	400.0	322.9	367.0	420.0	339.1	385.3	400.0	322.9	367.0	400.0	322.9	367.0	0.0	0.0	0.0	0.0	0.0	0.0	3
	6900	322.9	0.924																					
XPP00043A	CHARGING/SI PUMP A																								
	900.0	778.0	0.922	0	YES	880.0	701.4	760.7	880.0	701.4	760.7	880.0	701.4	760.7	0.0	0.0	0.0	740.0	589.8	639.7	0.0	0.0	0.0	14
	6900	717.3	0.936																					
XPP00043C	CHARGING/SI PUMP C																								
	900.0	778.0	0.922	N/A	NO	0.0	0.0	0.0	0.0	0.0	0.0	0.0	0.0	0.0	0.0	0.0	0.0	0.0	0.0	0.0	0.0	0.0	0.0	16
	6900	717.3	0.936																					
XTF04101	PRESSURIZER HEATERS BACKUP GROUP 1																								
	750.0	750.0	1.000	N/A	NO	0.0	0.0	0.0	0.0	0.0	0.0	0.0	0.0	0.0	0.0	0.0	0.0	537.0	537.0	537.0	0.0	0.0	0.0	1
	480	750.0																						
Total Load On Switchgear: XSW1DA							**1917.6**	**2157.5**		**1489.2**	**1637.0**		**1917.6**	**2157.5**		**771.7**	**858.0**		**2020.1**	**2206.5**		**448.8**	**491.0**	
XSW1DA1																									
APN01DA1	SWITCHGEAR XSW1DA1 DISTRIBUTION PANEL																								
	10.0	10.0	0.850	0	N/A	9.0	7.6	9.0	9.0	7.6	9.0	9.0	7.6	9.0	9.0	7.6	9.0	9.0	7.6	9.0	9.0	7.6	9.0	
	480	8.5																						
XFN00019A	AUXILIARY BUILDING CHARCOAL EXHAUST A																								
	125.0	119.5	0.850	N/A	NO	0.0	0.0	0.0	125.0	101.6	119.5	0.0	0.0	0.0	125.0	101.6	119.5	125.0	101.6	119.5	125.0	101.6	119.5	1,26
	460	101.6	0.918																					
XFN00019C	AUXILIARY BUILDING CHARCOAL EXHAUST FAN C																								
	125.0	119.5	0.850	N/A	NO	0.0	0.0	0.0	0.0	0.0	0.0	0.0	0.0	0.0	0.0	0.0	0.0	0.0	0.0	0.0	0.0	0.0	0.0	
	460	101.6	0.918																					
XFN00064A MFN00096A	REACTOR BUILDING COOLING UNIT FAN (MFN0096A)																								
	275.0	246.5	0.889	N/A	NO	0.0	0.0	0.0	0.0	0.0	0.0	0.0	0.0	0.0	0.0	0.0	0.0	0.0	0.0	0.0	0.0	0.0	0.0	
	460	219.2	0.936																					
XFN00064A MFN00097A	REACTOR BUILDING COOLING UNIT FAN (MFN0097A)																								
	75.0	77.4	0.779	25	YES	90.0	72.3	92.9	90.0	72.3	92.9	90.0	72.3	92.9	90.0	72.3	92.9	90.0	72.3	92.9	90.0	72.3	92.9	6,14,27
	460	60.3	0.928																					
XFN00065A MFN00096C	REACTOR BUILDING COOLING UNIT FAN (MFN0096C)																								
	275.0	246.5	0.889	N/A	NO	0.0	0.0	0.0	0.0	0.0	0.0	0.0	0.0	0.0	0.0	0.0	0.0	0.0	0.0	0.0	0.0	0.0	0.0	
	460	219.2	0.936																					

RN 10-014

FSAR TABLE 8.3-3 PART A2
BASIS FOR DIESEL GENERATOR FUEL OIL CONSUMPTION
Connected Automatic and Manual Loading and Unloading of the Diesel Generator
Channel A

Tag Number	Rated Load Data: Hp/kVA / Volts	kVA / kW	PF / Eff	(9) Load Seq (Sec.)	(20) Auto Start	LARGE BREAK LOCA WITH A LOOP — Injection Phase - 1/2 to 1 Hour: (31) Bhp/kVA	(32) kW	(33) kVA	LARGE BREAK LOCA WITH A LOOP — Indefinite Recirc. (8): (31) Bhp/kVA	(32) kW	(33) kVA	STEAM LINE BREAK WITH A LOOP — Short Term Phase - 2 Hours: (31) Bhp/kVA	(32) kW	(33) kVA	STEAM LINE BREAK WITH A LOOP — Long Term. (8): (31) Bhp/kVA	(32) kW	(33) kVA	LOSS OF OFFSITE POWER — Hot Standby - 30 Hours: (31) Bhp/kVA	(32) kW	(33) kVA	LOSS OF OFFSITE POWER — Cold Shutdown (8): (31) Bhp/kVA	(32) kW	(33) kVA	Notes
XSW1DA1 (Continued)																									
XFN00065A MFN00097C	REACTOR BUILDING COOLING UNIT FAN (MFN0097C)																								
	75.0	77.4	0.779	N/A	NO	0.0	0.0	0.0	0.0	0.0	0.0	0.0	0.0	0.0	0.0	0.0	0.0	0.0	0.0	0.0	0.0	0.0	0.0	0.0	14,27
	460	60.3	0.928																						
XHX00001A	HVAC SYSTEM MECHANICAL WATER CHILLER A																								
	321.0	286.1	0.900	30	YES	321.0	257.5	286.1	321.0	257.5	286.1	321.0	257.5	286.1	321.0	257.5	286.1	321.0	257.5	286.1	321.0	257.5	286.1	13	
	460	257.5	0.930																						
XHX00001C TRAIN A	HVAC SYSTEM MECHANICAL WATER CHILLER C - LOAD FOR TRAIN A																								
	321.0	286.1	0.900	N/A	NO	0.0	0.0	0.0	0.0	0.0	0.0	0.0	0.0	0.0	0.0	0.0	0.0	0.0	0.0	0.0	0.0	0.0	0.0	16	
	460	257.5	0.930																						
XPP00031A	RESIDUAL HEAT REMOVAL PUMP A																								
	300.0	262.2	0.914	0	YES	285.0	227.6	249.1	300.0	239.6	262.2	285.0	227.6	249.1	285.0	227.6	249.1	285.0	227.6	249.1	300.0	239.6	262.2		
	460	239.6	0.934																						
XPP00040A	REACTOR MAKE-UP WATER PUMP A																								
	60.0	58.3	0.850	N/A	NO	0.0	0.0	0.0	0.0	0.0	0.0	0.0	0.0	0.0	0.0	0.0	0.0	0.0	0.0	0.0	0.0	0.0	0.0		
	460	49.6	0.903																						
XPP00045A	SERVICE WATER BOOSTER PUMP A																								
	350.0	303.5	0.920	35	YES	250.0	199.5	216.8	250.0	199.5	216.8	250.0	199.5	216.8	250.0	199.5	216.8	250.0	199.5	216.8	0.0	0.0	0.0	7,14	
	460	279.3	0.935																						
Total Load On Switchgear: XSW1DA1							**764.6**	**853.9**		**878.1**	**986.5**		**764.6**	**853.9**		**866.2**	**973.4**		**866.2**	**973.4**		**678.7**	**769.7**		RN 10-014
XSW1DA2																									
APN01DA2	SWITCHGEAR XSW1DA2 DISTRIBUTION PANEL																								
	10.0	10.0	0.850	0	N/A	9.0	7.6	9.0	9.0	7.6	9.0	9.0	7.6	9.0	9.0	7.6	9.0	9.0	7.6	9.0	9.0	7.6	9.0		
	480	8.5																							
XFN00023A	FUEL BUILDING EXHAUST FAN 23A																								
	60.0	59.0	0.831	25	YES	56.0	45.8	55.1	56.0	45.8	55.1	56.0	45.8	55.1	56.0	45.8	55.1	56.0	45.8	55.1	56.0	45.8	55.1		
	460	49.0	0.913																						
XHR00004A	HYDROGEN RECOMBINER A																								
	75.0	75.0	1.000	N/A	NO	0.0	0.0	0.0	75.0	75.0	75.0	0.0	0.0	0.0	0.0	0.0	0.0	0.0	0.0	0.0	0.0	0.0	0.0	1,28	
	480	75.0																							
XIT05936 TRAIN A	INCOMING TRAIN A POWER																								
	125.0	125.0	1.000	0	N/A	105.7	105.7	105.7	105.7	105.7	105.7	105.7	105.7	105.7	105.7	105.7	105.7	105.7	105.7	105.7	105.7	105.7	105.7	15	
	480	125.0																							
XPP00032A	SPENT FUEL PIT COOLING PUMP A																								
	75.0	73.4	0.840	N/A	NO	0.0	0.0	0.0	60.0	49.3	58.7	0.0	0.0	0.0	60.0	49.3	58.7	60.0	49.3	58.7	60.0	49.3	58.7	1,29	
	460	61.6	0.908																						
XPP00048A	CHILLED WATER PUMP A																								
	60.0	53.4	0.930	10	YES	48.0	39.7	42.7	48.0	39.7	42.7	48.0	39.7	42.7	48.0	39.7	42.7	48.0	39.7	42.7	48.0	39.7	42.7	13	
	460	49.6	0.902																						
XPP00048C TRAIN A	CHILLED WATER PUMP C - LOAD FOR TRAIN A																								
	50.0	44.4	0.920	N/A	NO	0.0	0.0	0.0	0.0	0.0	0.0	0.0	0.0	0.0	0.0	0.0	0.0	0.0	0.0	0.0	0.0	0.0	0.0	16	
	460	40.9	0.913																						
Total Load On Switchgear: XSW1DA2							**198.8**	**212.5**		**323.1**	**346.1**		**198.8**	**212.5**		**248.1**	**271.2**		**248.1**	**271.2**		**248.1**	**271.2**		

FSAR TABLE 8.3-3 PART A2
BASIS FOR DIESEL GENERATOR FUEL OIL CONSUMPTION
Connected Automatic and Manual Loading and Unloading of the Diesel Generator
Channel A

Tag Number	Rated Load Data: Hp/kVA / Volts	kVA / kW	PF / Eff	(9) Load Seq (Sec.)	(20) Auto Start	LARGE BREAK LOCA WITH A LOOP — Injection Phase - 1/2 to 1 Hour: (31) Bhp/kVA	(32) kW	(33) kVA	LARGE BREAK LOCA WITH A LOOP — Indefinite Recirc. (8): (31) Bhp/kVA	(32) kW	(33) kVA	STEAM LINE BREAK WITH A LOOP — Short Term Phase - 2 Hours: (31) Bhp/kVA	(32) kW	(33) kVA	STEAM LINE BREAK WITH A LOOP — Long Term. (8): (31) Bhp/kVA	(32) kW	(33) kVA	LOSS OF OFFSITE POWER — Hot Standby - 30 Hours: (31) Bhp/kVA	(32) kW	(33) kVA	LOSS OF OFFSITE POWER — Cold Shutdown (8): (31) Bhp/kVA	(32) kW	(33) kVA	Notes
XSW1EA																										
MPP00039A	SERVICE WATER PUMP A MOTOR																									
	700.0 / 6900	622.0 / 573.5	0.922 / 0.911	10	YES	650.0	532.5	577.6	650.0	532.5	577.6	650.0	532.5	577.6	650.0	532.5	577.6	650.0	532.5	577.6	650.0	532.5	577.6	12
MPP00039C TRAIN A	SERVICE WATER PUMP C MOTOR - LOAD FOR TRAIN A																									
	700.0 / 6900	622.0 / 573.5	0.922 / 0.911	N/A	NO	0.0	0.0	0.0	0.0	0.0	0.0	0.0	0.0	0.0	0.0	0.0	0.0	0.0	0.0	0.0	0.0	0.0	0.0	16
Total Load On Switchgear: XSW1EA							**532.5**	**577.6**		**532.5**	**577.6**		**532.5**	**577.6**		**532.5**	**577.6**		**532.5**	**577.6**		**532.5**	**577.6**	
XSW1EA1																										
APN01EA1	SWITCHGEAR XSW1EA1 DISTRIBUTION PANEL																									
	10.0 / 480	10.0 / 8.5	0.850	0	N/A	9.0	7.6	9.0	9.0	7.6	9.0	9.0	7.6	9.0	9.0	7.6	9.0	9.0	7.6	9.0	9.0	7.6	9.0	
Total Load On Switchgear: XSW1EA1							**7.6**	**9.0**		**7.6**	**9.0**		**7.6**	**9.0**		**7.6**	**9.0**		**7.6**	**9.0**		**7.6**	**9.0**	
Subtotal Load On The Diesel Generator:							**3949.9**	**4435.7**		**3796.7**	**4223.4**		**3949.9**	**4435.7**		**2988.1**	**3351.0**		**4234.0**	**4697.7**		**2441.1**	**2735.9**	
Cable Losses:							10.0	10.0		10.0	10.0		10.0	10.0		10.0	10.0		10.0	10.0		10.0	10.0	
Transformer Losses:							38.0	38.0		38.0	38.0		38.0	38.0		38.0	38.0		38.0	38.0		38.0	38.0	
Generator Exciter Load:							25.0	30.0		25.0	30.0		25.0	30.0		25.0	30.0		25.0	30.0		25.0	30.0	RN 10-014
Total Generator Load With Optional Loads:							**4022.9**	**4513.7**		**3869.7**	**4301.4**		**4022.9**	**4513.7**		**3061.1**	**3429.0**		**4307.0**	**4775.7**		**2514.1**	**2813.9**	**10**
Optional Loads:							0.0	0.0		525.3	588.0		0.0	0.0		449.0	511.4		986.0	1048.4		449.0	511.4	
Total Generator Load Without Optional Loads:							**4022.9**	**4513.6**		**3344.4**	**3713.4**		**4022.9**	**4513.6**		**2612.1**	**2917.6**		**3321.0**	**3727.2**		**2065.1**	**2302.5**	

Total Records Printed: 92

FSAR TABLE 8.3-3 PART A2
BASIS FOR DIESEL GENERATOR FUEL OIL CONSUMPTION
Connected Automatic and Manual Loading and Unloading of the Diesel Generator
Channel A

Notes:

1 This is an optional load which can be started manually. It may be added if the DG loading conditions permit, and this load was not considered for fuel oil storage requirements since it is not a required load.
2 The pump is normally in low speed but is assumed to be auto-started in high speed. The speed change switch is manually operated. The pump will be operated in high speed for approximately 8 hours for the first 7 days following a DBE. If both DGs are running, only one train's pump will be in high speed during the plant shutdown.
3 The pump starts on receipt of a spray initiation signal.
4 The motor is not required for the accident scenarios but the motor will be running as it is not locked out by the load sequencer.
5 The motor is running in the Hot Standby scenario as the SWBP is automatically started by the load sequencer.
6 The motor is not required for the LOOP - Hot standby / Cold shutdown scenarios but is auto started by the load sequencer and expected to remain on for air circulation related purposes.
7 The motor is not required for the LOOP - Hot standby scenario but is auto started by the load sequencer.
8 The equipment is required to be operable for six months following an accident.
9 Time 0 indicates the emergency diesel generator has started and reached no load speed and voltage, at which the circuit breaker connecting to the 7200 volt bus has closed.
10 Total includes the RHR pump and all manual loads whose application will be limited so that neither the 2 hour rating (4676 kW) is exceeded for more than 2 hours nor the continuous rating of 4250 kW is exceeded.
11 The required safety function is for emergency core cooling.
12 The required safety function is for emergency core cooling and containment cooling.
13 The required safety function is for equipment area cooling.
14 The required safety function is for containment cooling.
15 This inverter is assumed to be running on this diesel generator. It is fed via a manual switchgear breaker.
16 The "C" train equipment is assumed to be not running as the normal train equipment is running.
17 This equipment is assumed to be supplied from this diesel generator.
18 Generator efficiency is assumed to be taken into account by the diesel manufacturer as the load limit is based on generator output kW (including the exciter) as monitored at the MCB.
19 The dc powered oil pumps associated with the turning gear are included in the battery charger loads.
20 For the Auto-Start columns, YES means the load is able to automatically start based on its control circuitry, NO means it does not, and N/A means the load is continuous and not subject to starting and stopping.
21 The normal battery charger is assumed in service.
22 The load is locked out on receipt of an SI signal.
23 The fan runs only when the EFWP is running.
24 The compressor runs only to recharge the air start system. It is assumed to be running in the first hour only.
25 XTG00001 will be running less than 24 hours total during the 7 days following a DBE.
26 The fan is expected to be manually started within the first 30 hours and is therefore shown as a load for the LOOP/Hot Standby mode.
27 Only 1 out of 2 RBCU fans is required to run post accident as selected.
28 The H2 recombiner will be operated as needed to support post accident response.
29 The pump will be operated as needed to maintain spent fuel pool temperatures within acceptable limits.
30 The component cooling water pump slow speed ratings are 250hp, .8094 PF, .9114 Efficiency, and 250kVA.
31 The "BHP/kVA" field lists the demand load that has been calculated for the specified event.
32 The "kW" field equals BHP/kVA x 0.746 kW/HP / EFF for motors. For non-motor loads this field equals BHP / kVA x PF.
33 The "kVA" field equals BHP / kVA x 0.746 kW/HP / (EFF x PF) for motors. For non-motor loads this field equals BHP / kVA.

FSAR TABLE 8.3-3 PART B1
Connected Automatic and Manual Loading and Unloading of the Diesel Generator
Channel B

Tag Number		Rated Load Data Hp/kVA	kW	Volts	Load Sequencer (Sec.) (9)	LARGE BREAK LOCA WITH A LOOP: Injection Phase - 1/2 to 1 Hour Auto-Start	Load kW	Load kVA	Indefinite Recirc. (8) Load kW	Load kVA	STEAM LINE BREAK WITH A LOOP: Short Term Phase - 2 Hours Auto-Start	Load kW	Load kVA	Long Term. (8) Load kW	Load kVA	LOSS OF OFFSITE POWER: Hot Standby - 30 Hours Auto-Start	Load kW	Load kVA	Cold Shutdown (8) Load kW	Load kVA	Notes
XMC1B1X																					
XTG00001	TURBINE TURNING GEAR	60.0	52.2	460	N/A	NO	0.0	0.0	54.8	63.0	NO	0.0	0.0	54.8	63.0	NO	54.8	63.0	54.8	63.0	1,25
Total Load On Motor Control Center: XMC1B1X							**0.0**	**0.0**	**54.8**	**63.0**		**0.0**	**0.0**	**54.8**	**63.0**		**54.8**	**63.0**	**54.8**	**63.0**	
XMC1DB2X																					
APN08005B	LIGHTING PANEL 5, ESSENTIAL PANEL, TRAIN B	10.0	8.5	480	0	N/A	3.4	4.0	3.4	4.0	N/A	3.4	4.0	3.4	4.0	N/A	3.4	4.0	3.4	4.0	
APN08036B	LIGHTING PANEL 36, ESSENTIAL PANEL, TRAIN B POWER FEED	10.0	8.5	480	0	N/A	4.3	5.0	4.3	5.0	N/A	4.3	5.0	4.3	5.0	N/A	4.3	5.0	4.3	5.0	
APN08054B	OUTDOOR ESSENTIAL LIGHTING PANEL B	46.0	39.1	480	0	N/A	39.1	46.0	39.1	46.0	N/A	39.1	46.0	39.1	46.0	N/A	39.1	46.0	39.1	46.0	
IRM00001	RADIATION MONITORING CONTROL ROOM SUPPLY AIR PUMP	1.0	0.8	460	0	YES	0.0	0.0	0.0	0.0	YES	0.0	0.0	0.0	0.0	YES	0.0	0.0	0.0	0.0	
XBC1B	DC 1B BATTERY CHARGER	43.3	32.5	480	0	N/A	7.1	9.4	7.1	9.4	N/A	7.1	9.4	7.1	9.4	N/A	7.1	9.4	7.1	9.4	
XBC1X-2X	BATTERY CHARGER	86.7	65.0	480	0	N/A	37.7	50.2	37.7	50.2	N/A	37.7	50.2	37.7	50.2	N/A	37.7	50.2	37.7	50.2	19
XFN00038B	BATT&CHG RM AIR HANDLING UNIT B SUP FAN	10.0	8.2	460	0	YES	5.7	7.0	5.7	7.0	YES	5.7	7.0	5.7	7.0	YES	5.7	7.0	5.7	7.0	
XFN00039B	BATTERY ROOM EXHAUST FAN B	5.0	4.3	460	0	YES	0.5	0.6	0.5	0.6	YES	0.5	0.6	0.5	0.6	YES	0.5	0.6	0.5	0.6	
XFN00076	ESF SWGR ROOM 1DB AH UNIT SUPPLY FAN	15.0	12.4	460	0	YES	5.8	7.0	5.8	7.0	YES	5.8	7.0	5.8	7.0	YES	5.8	7.0	5.8	7.0	
XFN00081B	SW BSTR PUMP AREA AH UNIT B SUPPLY FAN	3.0	2.3	460	0	YES	2.3	3.0	2.3	3.0	YES	2.3	3.0	2.3	3.0	YES	2.3	3.0	0.0	0.0	5
XFN00083B	EMER FW PUMP AREA AH UNIT B SUPPLY FAN	5.0	3.6	460	0	YES	2.2	3.0	0.0	0.0	YES	2.2	3.0	0.0	0.0	YES	2.2	3.0	0.0	0.0	23
XFN00106B	SPEED SWITCH ROOMS AH UNIT B SUPPLY FAN	10.0	8.2	460	0	YES	5.7	7.0	5.7	7.0	YES	5.7	7.0	5.7	7.0	YES	5.7	7.0	5.7	7.0	
XHX00001B CNTRL PWR	HVAC SYSTEM MECHANICAL WATER CHILLER B	15.0	12.8	480	0	N/A	6.4	7.5	6.4	7.5	N/A	6.4	7.5	6.4	7.5	N/A	6.4	7.5	6.4	7.5	
XHX00001C CTRL PWR B	XHX1C CTRL PWR HVAC SYS MECH. WATER CHILLER C CHANNEL B	15.0	12.8	480	0	N/A	6.4	7.5	6.4	7.5	N/A	6.4	7.5	6.4	7.5	N/A	6.4	7.5	6.4	7.5	
XPN07215B 480V PWR	POST ACCIDENT ANALYZER SYSTEM	1.7	1.4	480	0	N/A	0.0	0.0	1.4	1.6	N/A	0.0	0.0	0.0	0.0	N/A	0.0	0.0	0.0	0.0	1
XTF1FB	XFMR FOR 120V AC NSSS INSTR. MAIN DISTR. PNL 1FB	25.0	21.3	480	0	N/A	7.1	8.3	7.1	8.3	N/A	7.1	8.3	7.1	8.3	N/A	7.1	8.3	7.1	8.3	
Total Load On Motor Control Center: XMC1DB2X							**133.5**	**165.5**	**132.7**	**164.2**		**133.5**	**165.5**	**131.4**	**162.5**		**133.5**	**165.5**	**129.1**	**159.5**	

FSAR TABLE 8.3-3 PART B1
Connected Automatic and Manual Loading and Unloading of the Diesel Generator
Channel B

Tag Number	Rated Load Data Hp/kVA	kW	Volts	Load Sequencer (Sec.) (9)	LARGE BREAK LOCA WITH A LOOP: Injection Phase - 1/2 to 1 Hour Auto-Start	Load kW	Load kVA	Indefinite Recirc. (8) Load kW	Load kVA	STEAM LINE BREAK WITH A LOOP: Short Term Phase - 2 Hours Auto-Start	Load kW	Load kVA	Long Term. (8) Load kW	Load kVA	LOSS OF OFFSITE POWER: Hot Standby - 30 Hours Auto-Start	Load kW	Load kVA	Cold Shutdown (8) Load kW	Load kVA	Notes
XMC1DB2Y																				
APN08013B	LIGHTING PANEL 13, ESSENTIAL PANEL, TRAIN B																			
	30.0	25.5	480	0	N/A	23.8	28.0	23.8	28.0	N/A	23.8	28.0	23.8	28.0	N/A	23.8	28.0	23.8	28.0	
IRM00002	RADIATION MONITORING REACTOR BUILDING SAMPLE LINE PUMP 1																			
	1.0	0.8	460	0	YES	0.8	1.0	0.8	1.0	YES	0.8	1.0	0.8	1.0	YES	0.8	1.0	0.8	1.0	4
IRM00006	RADIATION MONITORING FUEL HANDLING BLDG. EXHAUST PUMP																			
	1.0	0.8	460	0	YES	0.8	1.0	0.8	1.0	YES	0.8	1.0	0.8	1.0	YES	0.8	1.0	0.8	1.0	4
IRM00011	RADIATION MONITOR AUX. BLDG. VENTS																			
	1.0	0.8	460	0	YES	0.8	1.0	0.8	1.0	YES	0.8	1.0	0.8	1.0	YES	0.8	1.0	0.8	1.0	4
XBC1A-1B TRAIN B	DC 1A-1B BACKUP BATTERY CHRG																			
	43.3	32.5	480	N/A	NO	0.0	0.0	0.0	0.0	NO	0.0	0.0	0.0	0.0	NO	0.0	0.0	0.0	0.0	21
XFN00028B	CONTROLLED ACCESS EXHAUST FAN B																			
	50.0	42.5	460	N/A	NO	0.0	0.0	0.0	0.0	NO	0.0	0.0	0.0	0.0	NO	0.0	0.0	0.0	0.0	22
XFN00030B	CONT RM EMERGENCY FILTERING SYS FAN B																			
	40.0	33.1	460	0	YES	33.1	40.0	33.1	40.0	YES	33.1	40.0	33.1	40.0	YES	33.1	40.0	0.0	0.0	
XFN00032B	CONTROL ROOM COOLING UNIT B FAN																			
	25.0	20.8	460	0	YES	14.9	18.0	14.9	18.0	YES	14.9	18.0	14.9	18.0	YES	14.9	18.0	14.9	18.0	
XFN00036B	RELAY ROOM SUPPLY FAN B																			
	15.0	12.4	460	0	YES	9.1	11.0	9.1	11.0	YES	9.1	11.0	9.1	11.0	YES	9.1	11.0	9.1	11.0	
XFN00041B	COMPUTER ROOM SUPPLY FAN B (UNIT 1)																			
	5.0	4.3	460	N/A	NO	0.0	0.0	0.0	0.0	NO	0.0	0.0	0.0	0.0	NO	0.0	0.0	0.0	0.0	22
XFN00046B	CHARGING/SI PUMP RM 3 COOLING UNIT FAN																			
	3.0	2.3	460	0	YES	2.3	3.0	2.3	3.0	YES	2.3	3.0	0.0	0.0	YES	2.3	3.0	0.0	0.0	
XFN00049B	RHR/SPRAY PUMP ROOM 2 COOLING UNIT FAN																			
	3.0	2.3	460	0	YES	2.3	3.0	2.3	3.0	YES	2.3	3.0	2.3	3.0	YES	2.3	3.0	2.3	3.0	
XFN00087B	CONTROLLED ACCESS LAB HOOD EXHAUST FAN B																			
	5.0	4.3	460	N/A	NO	0.0	0.0	0.0	0.0	NO	0.0	0.0	0.0	0.0	NO	0.0	0.0	0.0	0.0	22
XFN00133	AUX BLDG MCC-SWGR ROOM COOLING UNIT FAN																			
	5.0	3.6	460	0	YES	2.4	3.4	2.4	3.4	YES	2.4	3.4	2.4	3.4	YES	2.4	3.4	2.4	3.4	
XIT05903	INSTRUMENT SUPPLY INVERTERS																			
	10.0	8.5	480	0	N/A	6.5	7.6	6.5	7.6	N/A	6.5	7.6	6.5	7.6	N/A	6.5	7.6	6.5	7.6	
XIT05904	INSTRUMENT SUPPLY INVERTERS																			
	10.0	8.5	480	0	N/A	4.6	5.4	4.6	5.4	N/A	4.6	5.4	4.6	5.4	N/A	4.6	5.4	4.6	5.4	
XPN00040 TRAIN B	PUMP AUXILIARIES TRANSFER PNL-XPP0043C																			
	1.0	0.8	480	0	N/A	0.8	1.0	0.8	1.0	N/A	0.8	1.0	0.8	1.0	N/A	0.8	1.0	0.8	1.0	17

FSAR TABLE 8.3-3 PART B1
Connected Automatic and Manual Loading and Unloading of the Diesel Generator
Channel B

Tag Number	Rated Load Data Hp/kVA	kW	Volts	Load Sequencer (Sec.) (9)	LARGE BREAK LOCA WITH A LOOP: Injection Phase - 1/2 to 1 Hour Auto-Start	Load kW	Load kVA	Indefinite Recirc. (8) Load kW	Load kVA	STEAM LINE BREAK WITH A LOOP: Short Term Phase - 2 Hours Auto-Start	Load kW	Load kVA	Long Term. (8) Load kW	Load kVA	LOSS OF OFFSITE POWER: Hot Standby - 30 Hours Auto-Start	Load kW	Load kVA	Cold Shutdown (8) Load kW	Load kVA	Notes
XMC1DB2Y (Continued(																				
XPN02022	REFLING WTR STRGE TANK & PIPING HEAT TRACING CENTRLZD CONT P																			RN 12-006
	15.0	15.0	460	0	YES	0.0	0.0	0.0	0.0	YES	0.0	0.0	0.0	0.0	YES	0.0	0.0	0.0	0.0	
XPN02008	REAC MU WTR STRGE TANK&PIPING HEAT TRACING CENTRLZD CONTRL P																			
	6.0	6.0	460	0	YES	0.0	0.0	0.0	0.0	YES	0.0	0.0	0.0	0.0	YES	0.0	0.0	0.0	0.0	
XPN02020	SODIUM HYDROXIDE SPRAY SYSTEM HEAT TRACING CENTRLZD CONT PN																			RN 12-006
	3.0	3.0	460	0	YES	0.0	0.0	0.0	0.0	YES	0.0	0.0	0.0	0.0	YES	0.0	0.0	0.0	0.0	
XPP00013B	BORIC ACID PUMPS																			
	15.5	13.2	460	0	NO	0.0	0.0	0.0	0.0	NO	0.0	0.0	0.0	0.0	NO	0.0	0.0	0.0	0.0	
XPP00043B PP AUX OIL	CHARGING/SI PUMP B AUXILIARY OIL PUMP ALOP2																			
	2.0	1.7	460	0	YES	1.2	1.4	1.2	1.4	YES	1.2	1.4	1.2	1.4	YES	1.2	1.4	0.0	0.0	
XTF05014	SECURITY SYSTEM VIA XET04006																			
	37.5	31.9	480	0	N/A	25.5	30.0	25.5	30.0	N/A	25.5	30.0	25.5	30.0	N/A	25.5	30.0	25.5	30.0	17
XTF05930	BACKUP MET. TOWER DISTR. PANEL																			
	0.0	0.0	480	0	N/A	12.8	15.0	12.8	15.0	N/A	12.8	15.0	12.8	15.0	N/A	12.8	15.0	12.8	15.0	
XTF08024B	XFMR FOR LIGHTING PANEL 24, ESSENTIAL PANEL, TRAIN B																			
	15.0	12.8	480	0	N/A	6.4	7.5	6.4	7.5	N/A	6.4	7.5	6.4	7.5	N/A	6.4	7.5	6.4	7.5	
XTF09006B	RECEPTACLE TRANSFORMER #6																			
	10.0	8.5	480	0	N/A	0.0	0.0	0.0	0.0	N/A	0.0	0.0	0.0	0.0	N/A	0.0	0.0	0.0	0.0	
Total Load On Motor Control Center: XMC1DB2Y						**148.1**	**177.4**	**148.1**	**177.4**		**148.1**	**177.4**	**145.8**	**174.4**		**148.1**	**177.4**	**111.5**	**133.0**	
XMC1DB2Z																				
APN08038B	LIGHTING PANEL 38, ESENTIAL PANEL																			
	45.0	38.3	480	0	N/A	2.5	3.0	2.5	3.0	N/A	2.5	3.0	2.5	3.0	N/A	2.5	3.0	2.5	3.0	
XAC00008C	AIR STARTING PACKAGE - DIESEL GEN.																			
	15.0	12.8	460	0	YES	13.2	15.5	0.0	0.0	YES	13.2	15.5	0.0	0.0	YES	13.2	15.5	0.0	0.0	24
XAC00008D	AIR STARTING PACKAGE - DIESEL GEN.																			
	15.0	12.8	460	0	NO	0.0	0.0	0.0	0.0	NO	0.0	0.0	0.0	0.0	NO	0.0	0.0	0.0	0.0	
XFN00045A	DG AREA B VENTILATION AIR SUPPLY FAN A																			
	30.0	24.7	460	0	YES	20.6	25.0	20.6	25.0	YES	20.6	25.0	20.6	25.0	YES	20.6	25.0	20.6	25.0	
XFN00045B	DG AREA B VENTILATION AIR SUPPY FAN B																			
	30.0	24.7	460	0	YES	20.6	25.0	20.6	25.0	YES	20.6	25.0	20.6	25.0	YES	20.6	25.0	20.6	25.0	
XMC1DB2Z HTR	SPACE HTRS FOR XMC1DB2Z																			
	0.5	0.5	480	N/A	N/A	0.5	0.5	0.5	0.5	N/A	0.5	0.5	0.5	0.5	N/A	0.5	0.5	0.5	0.5	
XPN00048	1B DIESEL POWER PANEL																			
	56.0	47.6	480	0	N/A	47.6	56.0	47.6	56.0	N/A	47.6	56.0	47.6	56.0	N/A	47.6	56.0	47.6	56.0	
XPP00004B	DG FUEL OIL TRANSFER PUMP 4B																			
	1.0	0.7	460	0	YES	0.4	0.6	0.4	0.6	YES	0.4	0.6	0.4	0.6	YES	0.4	0.6	0.4	0.6	
XPP00141B	DG FUEL OIL TRANSFER PUMP 141B																			
	1.0	0.7	460	0	YES	0.4	0.6	0.4	0.6	YES	0.4	0.6	0.4	0.6	YES	0.4	0.6	0.4	0.6	
XPP00146B	DIESEL GENERATOR BLDG SUMP PUMP																			
	2.0	1.7	460	N/A	NO	0.0	0.0	0.0	0.0	NO	0.0	0.0	0.0	0.0	NO	0.0	0.0	0.0	0.0	22
Total Load On Motor Control Center: XMC1DB2Z						**105.9**	**126.3**	**92.8**	**110.8**		**105.9**	**126.3**	**92.8**	**110.8**		**105.9**	**126.3**	**92.8**	**110.8**	

FSAR TABLE 8.3-3 PART B1
Connected Automatic and Manual Loading and Unloading of the Diesel Generator
Channel B

Tag Number	Rated Load Data Hp/kVA	kW	Volts	Load Sequencer (Sec.) (9)	LARGE BREAK LOCA WITH A LOOP: Injection Phase - 1/2 to 1 Hour Auto-Start	Load kW	Load kVA	Indefinite Recirc. (8) Load kW	Load kVA	STEAM LINE BREAK WITH A LOOP: Short Term Phase - 2 Hours Auto-Start	Load kW	Load kVA	Long Term. (8) Load kW	Load kVA	LOSS OF OFFSITE POWER: Hot Standby - 30 Hours Auto-Start	Load kW	Load kVA	Cold Shutdown (8) Load kW	Load kVA	Notes	
XMC1EB1X																					
APN04007	SW BLDG POWER PANEL #2																				
	60.0	51.0	480	0	N/A	21.3	25.0	21.3	25.0	N/A	21.3	25.0	21.3	25.0	N/A	21.3	25.0	21.3	25.0		
APN08032B	LIGHTING PANEL 32, ESSENTIAL PANEL, TRAIN B POWER FEED																				
	10.0	8.5	480	0	N/A	5.1	6.0	5.1	6.0	N/A	5.1	6.0	5.1	6.0	N/A	5.1	6.0	5.1	6.0		
XFN00080B	SERVICE WATER BUILDING SUPPLY FAN B																				
	50.0	41.9	460	0	YES	48.6	58.0	48.6	58.0	YES	48.6	58.0	48.6	58.0	YES	48.6	58.0	48.6	58.0		
XPP00147B	SERVICE WATER PUMPHOUSE SUMP PUMP																				
	1.0	0.8	460	N/A	NO	0.0	0.0	0.0	0.0	NO	0.0	0.0	0.0	0.0	NO	0.0	0.0	0.0	0.0	22	
XRS00002B	SW TRAVELING SCREEN B																				
	1.0	0.8	460	0	NO	0.8	1.0	0.8	1.0	NO	0.8	1.0	0.8	1.0	NO	0.8	1.0	0.8	1.0	22	RN 15-025
Total Load On Motor Control Center: XMC1EB1X						**75.8**	**90.0**	**75.8**	**90.0**		**75.8**	**90.0**	**75.8**	**90.0**		**75.8**	**90.0**	**75.8**	**90.0**		
XMC1EC1X																					
XRS00002C	SW TRAVELING SCREEN C																				
	1.0	0.8	460	N/A	NO	0.0	0.0	0.0	0.0	NO	0.0	0.0	0.0	0.0	NO	0.0	0.0	0.0	0.0	16,22	RN 15-025
Total Load On Motor Control Center: XMC1EC1X						**0.0**	**0.0**	**0.0**	**0.0**		**0.0**	**0.0**	**0.0**	**0.0**		**0.0**	**0.0**	**0.0**	**0.0**		
XSW1DB																					
MPP00001B	COMPONENT COOLING PUMP B MOTOR																				
	600.0	548.4	6900	15	YES	502.7	550.0	502.7	550.0	YES	502.7	550.0	502.7	550.0	YES	502.7	550.0	502.7	550.0	2,11,30	
MPP00001C TRAIN B	COMPONENT CLG PP C FED VIA XES2001C & XET02001C																				
	600.0	519.6	6900	N/A	NO	0.0	0.0	0.0	0.0	NO	0.0	0.0	0.0	0.0	NO	0.0	0.0	0.0	0.0	16	
XPP00021B	EMERGENCY FEEDWATER PUMP B																				
	600.0	495.0	6900	20	YES	453.8	550.0	0.0	0.0	YES	453.8	550.0	0.0	0.0	YES	453.8	550.0	0.0	0.0	11	
XPP00038B	REACTOR BUILDING SPRAY PUMP B																				
	400.0	352.0	6900	N/A	YES	352.0	400.0	369.6	420.0	YES	352.0	400.0	352.0	400.0	NO	0.0	0.0	0.0	0.0	3	
XPP00043B	CHARGING/SI PUMP B																				
	900.0	829.8	6900	0	YES	792.9	860.0	792.9	860.0	YES	792.9	860.0	0.0	0.0	YES	663.8	720.0	0.0	0.0	14	
XPP00043C TRAIN B	CHARGING/SI PUMP C FED VIA XET2002C																				
	900.0	829.8	6900	N/A	NO	0.0	0.0	0.0	0.0	NO	0.0	0.0	0.0	0.0	NO	0.0	0.0	0.0	0.0	16	
XTF04102	PRESSURIZER HEATERS BACKUP GROUP 2																				
	750.0	750.0	480	N/A	NO	0.0	0.0	0.0	0.0	NO	0.0	0.0	0.0	0.0	NO	485.1	485.1	0.0	0.0	1	
Total Load On Switchgear: XSW1DB						**2101.4**	**2360.0**	**1665.2**	**1830.0**		**2101.4**	**2360.0**	**854.7**	**950.0**		**2105.4**	**2305.1**	**502.7**	**550.0**		

FSAR TABLE 8.3-3 PART B1
Connected Automatic and Manual Loading and Unloading of the Diesel Generator
Channel B

						LARGE BREAK LOCA WITH A LOOP				STEAM LINE BREAK WITH A LOOP					LOSS OF OFFSITE POWER				
	Rated Load Data			Load	Injection Phase - 1/2 to 1 Hour			Indefinite Recirc. (8)		Short Term Phase - 2 Hours			Long Term. (8)		Hot Standby - 30 Hours			Cold Shutdown (8)	
Tag Number	Hp/kVA	kW	Volts	Sequencer (Sec.) (9)	Auto-Start	Load kW	Load kVA	Load kW	Load kVA	Auto-Start	Load kW	Load kVA	Load kW	Load kVA	Auto-Start	Load kW	Load kVA	Load kW	Load kVA	Notes
XSW1DB1																				
APN01DB1	SWITCHGEAR XSW1DB1 DISTRIBUTION PANEL																			
	10.0	8.5	480	0	N/A	7.6	9.0	7.6	9.0	N/A	7.6	9.0	7.6	9.0	N/A	7.6	9.0	7.6	9.0	
XAC00012	SUPPLEMENTAL INSTRUMENT AIR COMPRESSOR																			
	150.0	129.0	460	N/A	NO	0.0	0.0	129.0	150.0	NO	0.0	0.0	129.0	150.0	NO	129.0	150.0	129.0	150.0	1
XFN00019B	CHARCOAL EXHAUST FAN B																			
	125.0	106.3	460	N/A	NO	0.0	0.0	106.3	125.0	NO	0.0	0.0	106.3	125.0	NO	106.3	125.0	106.3	125.0	1,26
XFN00019D	AUXILIARY BUILDING CHARCOAL EXHAUST FAN D																			
	125.0	106.3	460	N/A	NO	0.0	0.0	0.0	0.0	NO	0.0	0.0	0.0	0.0	NO	0.0	0.0	0.0	0.0	
XFN00064B MFN00096B	REACTOR BUILDING COOLING UNIT FAN (MFN0096B)																			
	275.0	244.5	460	N/A	NO	0.0	0.0	0.0	0.0	NO	0.0	0.0	0.0	0.0	NO	0.0	0.0	0.0	0.0	
XFN00064B MFN00097B	REACTOR BUILDING COOLING UNIT FAN (MFN0097B)																			
	75.0	58.4	460	25	YES	70.1	90.0	70.1	90.0	YES	70.1	90.0	70.1	90.0	YES	70.1	90.0	70.1	90.0	6,14,27
XFN00065B MFN00096D	REACTOR BUILDING COOLING UNIT FAN (MFN0096D)																			
	275.0	244.5	460	N/A	NO	0.0	0.0	0.0	0.0	NO	0.0	0.0	0.0	0.0	NO	0.0	0.0	0.0	0.0	
XFN00065B MFN00097D	REACTOR BUILDING COOLING UNIT FAN (MFN0097D)																			
	75.0	58.4	460	N/A	NO	0.0	0.0	0.0	0.0	NO	0.0	0.0	0.0	0.0	NO	0.0	0.0	0.0	0.0	14,27
XHX00001B	HVAC SYSTEM MECHANICAL WATER CHILLER B																			
	321.0	288.9	460	30	YES	288.9	321.0	288.9	321.0	YES	288.9	321.0	288.9	321.0	YES	288.9	321.0	288.9	321.0	13
XHX00001C TRAIN B	HVAC SYSTEM MECHANICAL WATER CHILLER C - LOAD FOR TRAIN B																			
	321.0	288.9	460	N/A	NO	0.0	0.0	0.0	0.0	NO	0.0	0.0	0.0	0.0	NO	0.0	0.0	0.0	0.0	16
XPP00031B	RESIDUAL HEAT REMOVAL PUMP B																			
	300.0	274.2	460	0	YES	260.5	285.0	274.2	300.0	YES	260.5	285.0	260.5	285.0	YES	260.5	285.0	274.2	300.0	
XPP00040B	REACTOR MAKE-UP WATER PUMP B																			
	60.0	51.0	460	N/A	NO	0.0	0.0	0.0	0.0	NO	0.0	0.0	0.0	0.0	NO	0.0	0.0	0.0	0.0	
XPP00045B	SERVICE WATER BOOSTER PUMP B																			
	350.0	322.0	460	35	YES	230.0	250.0	230.0	250.0	YES	230.0	250.0	230.0	250.0	YES	230.0	250.0	0.0	0.0	7,14
Total Load On Switchgear: XSW1DB1						**857.2**	**955.0**	**1106.1**	**1245.0**		**857.2**	**955.0**	**1092.4**	**1230.0**		**1092.4**	**1230.0**	**876.1**	**995.0**	
XSW1DB2																				
APN01DB2	SWITCHGEAR XSW1DB2 DISTR. PNL.																			
	10.0	8.5	480	0	N/A	7.6	9.0	7.6	9.0	N/A	7.6	9.0	7.6	9.0	N/A	7.6	9.0	7.6	9.0	
XFN00023B	FUEL BUILDING EXHAUST FAN 23B																			
	60.0	49.9	460	25	YES	46.5	56.0	46.5	56.0	YES	46.5	56.0	46.5	56.0	YES	46.5	56.0	46.5	56.0	
XHR00004B	HYDROGEN RECOMBINER B																			
	75.0	75.0	480	N/A	NO	0.0	0.0	75.0	75.0	NO	0.0	0.0	0.0	0.0	NO	0.0	0.0	0.0	0.0	1,28
XIT05936 TRAIN B	INCOMING TRAIN B POWER																			
	125.0	125.0	480	0	N/A	105.7	105.7	105.7	105.7	N/A	105.7	105.7	105.7	105.7	N/A	105.7	105.7	105.7	105.7	15
XPP00032B	SPENT FUEL PIT COOLING PUMP B																			
	75.0	63.0	460	N/A	NO	0.0	0.0	50.4	60.0	NO	0.0	0.0	50.4	60.0	NO	50.4	60.0	50.4	60.0	1,29
XPP00048B	HVAC SYSTEM CHILL WATER PUMP B																			
	60.0	55.8	460	10	YES	44.6	48.0	44.6	48.0	YES	44.6	48.0	44.6	48.0	YES	44.6	48.0	44.6	48.0	13
XPP00048C TRAIN B	CHILLED WATER PUMP C - LOAD FOR TRAIN B																			
	50.0	46.0	460	N/A	NO	0.0	0.0	0.0	0.0	NO	0.0	0.0	0.0	0.0	NO	0.0	0.0	0.0	0.0	16
Total Load On Switchgear: XSW1DB2						**204.5**	**218.7**	**329.9**	**353.7**		**204.5**	**218.7**	**254.9**	**278.7**		**254.9**	**278.7**	**254.9**	**278.7**	

FSAR TABLE 8.3-3 PART B1
Connected Automatic and Manual Loading and Unloading of the Diesel Generator
Channel B

Tag Number	Rated Load Data Hp/kVA	kW	Volts	Load Sequencer (Sec.) (9)	LARGE BREAK LOCA WITH A LOOP: Injection Phase - 1/2 to 1 Hour Auto-Start	Load kW	Load kVA	Indefinite Recirc. (8) Load kW	Load kVA	STEAM LINE BREAK WITH A LOOP: Short Term Phase - 2 Hours Auto-Start	Load kW	Load kVA	Long Term. (8) Load kW	Load kVA	LOSS OF OFFSITE POWER: Hot Standby - 30 Hours Auto-Start	Load kW	Load kVA	Cold Shutdown (8) Load kW	Load kVA	Notes
XSW1EB																				
MPP00039B	SERVICE WATER PUMP B MOTOR																			
	700.0	645.4	6900	10	YES	599.3	650.0	599.3	650.0	YES	599.3	650.0	599.3	650.0	YES	599.3	650.0	599.3	650.0	12
MPP00039C TRAIN B	SERVICE WATER PUMP C MOTOR - LOAD FOR TRAIN B																			
	700.0	645.4	6900	N/A	NO	0.0	0.0	0.0	0.0	NO	0.0	0.0	0.0	0.0	NO	0.0	0.0	0.0	0.0	16
Total Load On Switchgear: XSW1EB						**599.3**	**650.0**	**599.3**	**650.0**		**599.3**	**650.0**	**599.3**	**650.0**		**599.3**	**650.0**	**599.3**	**650.0**	
XSW1EB1																				
APN01EB1	SWITCHGEAR XSW1EB1 DISTRIBUTION PANEL																			
	10.0	8.5	480	0	N/A	7.6	9.0	7.6	9.0	N/A	7.6	9.0	7.6	9.0	N/A	7.6	9.0	7.6	9.0	
Total Load On Switchgear: XSW1EB1						**7.6**	**9.0**	**7.6**	**9.0**		**7.6**	**9.0**	**7.6**	**9.0**		**7.6**	**9.0**	**7.6**	**9.0**	
Subtotal Load On The Diesel Generator:						**4233.5**	**4751.9**	**4212.5**	**4693.1**		**4233.5**	**4751.9**	**3309.7**	**3718.5**		**4577.9**	**5095.0**	**2704.8**	**3039.1**	
Cable Losses:						10.0	10.0	10.0	10.0		10.0	10.0	10.0	10.0		10.0	10.0	10.0	10.0	
Transformer Losses:						33.0	33.0	33.0	33.0		33.0	33.0	33.0	33.0		33.0	33.0	33.0	33.0	
Generator Exciter Load:						29.0	34.0	29.0	34.0		29.0	34.0	29.0	34.0		29.0	34.0	29.0	34.0	
Total Generator Load With Optional Loads:						**4305.5**	**4828.9**	**4284.5**	**4770.1**		**4305.5**	**4828.9**	**3381.7**	**3795.5**		**4649.9**	**5172.0**	**2776.8**	**3116.1**	**10**
Optional Loads:						0.0	0.0	416.9	474.7		0.0	0.0	340.5	398.0		825.6	883.1	340.5	398.0	
Total Generator Load Without Optional Loads:						**4305.4**	**4828.9**	**3867.7**	**4295.4**		**4305.4**	**4828.9**	**3041.2**	**3397.4**		**3824.4**	**4288.9**	**2436.3**	**2718.1**	

Total Records Printed: 89

FSAR TABLE 8.3-3 PART B1
Connected Automatic and Manual Loading and Unloading of the Diesel Generator
Channel B

Notes:

1 This is an optional load which can be started manually. It may be added if the DG loading conditions permit, and this load was not considered for fuel oil storage requirements since it is not a required load.

2 The pump is normally in low speed but is assumed to be auto-started in high speed. The speed change switch is manually operated. The pump will be operated in high speed for approximately 8 hours for the first 7 days following a DBE. If both DGs are running, only one train's pump will be in high speed during the plant shutdown.

3 The pump starts on receipt of a spray initiation signal.

4 The motor is not required for the accident scenarios but the motor will be running as it is not locked out by the load sequencer.

5 The motor is running in the Hot Standby scenario as the SWBP is automatically started by the load sequencer.

6 The motor is not required for the LOOP - Hot standby / Cold shutdown scenarios but is auto started by the load sequencer and expected to remain on for air circulation related purposes.

7 The motor is not required for the LOOP - Hot standby scenario but is auto started by the load sequencer.

8 The equipment is required to be operable for six months following an accident.

9 Time 0 indicates the emergency diesel generator has started and reached no load speed and voltage, at which the circuit breaker connecting to the 7200 volt bus has closed.

10 Total includes the RHR pump and all manual loads whose application will be limited so that neither the 2 hour rating (4676 kW) is exceeded for more than 2 hours nor the continuous rating of 4250 kW is exceeded.

11 The required safety function is for emergency core cooling.

12 The required safety function is for emergency core cooling and containment cooling.

13 The required safety function is for equipment area cooling.

14 The required safety function is for containment cooling.

15 This inverter is assumed to be running on this diesel generator. It is fed via a manual switchgear breaker.

16 The "C" train equipment is assumed to be not running as the normal train equipment is running.

17 This equipment is assumed to be supplied from this diesel generator.

18 Generator efficiency is assumed to be taken into account by the diesel manufacturer as the load limit is based on generator output kW (including the exciter) as monitored at the MCB.

19 The dc powered oil pumps associated with the turning gear are included in the battery charger loads.

20 For the Auto-Start columns, YES means the load is able to automatically start based on its control circuitry, NO means it does not, and N/A means the load is continuous and not subject to starting and stopping.

21 The normal battery charger is assumed in service.

22 The load is locked out on receipt of an SI signal.

23 The fan runs only when the EFWP is running.

24 The compressor runs only to recharge the air start system. It is assumed to be running in the first hour only.

25 XTG00001 will be running less than 24 hours total during the 7 days following a DBE.

26 The fan is expected to be manually started within the first 30 hours and is therefore shown as a load for the LOOP/Hot Standby mode.

27 Only 1 out of 2 RBCU fans is required to run post accident as selected.

28 The H2 recombiner will be operated as needed to support post accident response.

29 The pump will be operated as needed to maintain spent fuel pool temperatures within acceptable limits.

30 The component cooling water pump slow speed ratings are 250hp, .8094 PF, .9114 Efficiency, and 250kVA.

FSAR TABLE 8.3-3 PART B2
BASIS FOR DIESEL GENERATOR FUEL OIL CONSUMPTION
Connected Automatic and Manual Loading and Unloading of the Diesel Generator
Channel B

Tag Number	Rated Load Data: Hp/kVA / Volts	kVA / kW	PF / Eff	(9) Load Seq (Sec.)	(20) Auto Start	LARGE BREAK LOCA WITH A LOOP — Injection Phase - 1/2 to 1 Hour: (31) Bhp/kVA	(32) kW	(33) kVA	LARGE BREAK LOCA WITH A LOOP — Indefinite Recirc. (8): (31) Bhp/kVA	(32) kW	(33) kVA	STEAM LINE BREAK WITH A LOOP — Short Term Phase - 2 Hours: (31) Bhp/kVA	(32) kW	(33) kVA	STEAM LINE BREAK WITH A LOOP — Long Term. (8): (31) Bhp/kVA	(32) kW	(33) kVA	LOSS OF OFFSITE POWER — Hot Standby - 30 Hours: (31) Bhp/kVA	(32) kW	(33) kVA	LOSS OF OFFSITE POWER — Cold Shutdown (8): (31) Bhp/kVA	(32) kW	(33) kVA	Notes
XMC1B1X																										
XTG00001	TURBINE TURNING GEAR																									
	60.0	57.0	0.870	N/A	NO	0.0	0.0	0.0	63.0	52.0	59.8	0.0	0.0	0.0	63.0	52.0	59.8	63.0	52.0	59.8	63.0	52.0	59.8	1,25
	460	49.6	0.903																					
Total Load On Motor Control Center: XMC1B1X							**0.0**	**0.0**		**52.0**	**59.8**		**0.0**	**0.0**		**52.0**	**59.8**		**52.0**	**59.8**		**52.0**	**59.8**	
XMC1DB2X																								
APN08005B	LIGHTING PANEL 5, ESSENTIAL PANEL, TRAIN B																							
	10.0	10.0	0.850	0	N/A	4.0	3.4	4.0	4.0	3.4	4.0	4.0	3.4	4.0	4.0	3.4	4.0	4.0	3.4	4.0	4.0	3.4	4.0	
	480	8.5																						
APN08036B	LIGHTING PANEL 36, ESSENTIAL PANEL, TRAIN B POWER FEED																							
	10.0	10.0	0.850	0	N/A	5.0	4.3	5.0	5.0	4.3	5.0	5.0	4.3	5.0	5.0	4.3	5.0	5.0	4.3	5.0	5.0	4.3	5.0	
	480	8.5																						
APN08054B	OUTDOOR ESSENTIAL LIGHTING PANEL B																							
	46.0	46.0	0.850	0	N/A	46.0	39.1	46.0	46.0	39.1	46.0	46.0	39.1	46.0	46.0	39.1	46.0	46.0	39.1	46.0	46.0	39.1	46.0	
	480	39.1																						
IRM00001	RADIATION MONITORING CONTROL ROOM SUPPLY AIR PUMP																							
	1.0	1.0	0.750	0	YES	0.0	0.0	0.0	0.0	0.0	0.0	0.0	0.0	0.0	0.0	0.0	0.0	0.0	0.0	0.0	0.0	0.0	0.0	
	460	0.8																						
XBC1B	DC 1B BATTERY CHARGER																							
	43.3	43.3	0.750	0	N/A	9.4	7.1	9.4	9.4	7.1	9.4	9.4	7.1	9.4	9.4	7.1	9.4	9.4	7.1	9.4	9.4	7.1	9.4	
	480	32.5																						
XBC1X-2X	BATTERY CHARGER																							
	86.7	86.7	0.750	0	N/A	50.2	37.7	50.2	50.2	37.7	50.2	50.2	37.7	50.2	50.2	37.7	50.2	50.2	37.7	50.2	50.2	37.7	50.2	19
	480	65.0																						
XFN00038B	BATT&CHG RM AIR HANDLING UNIT B SUP FAN																							
	10.0	10.7	0.820	0	YES	7.0	6.1	7.5	7.0	6.1	7.5	7.0	6.1	7.5	7.0	6.1	7.5	7.0	6.1	7.5	7.0	6.1	7.5	
	460	8.8	0.850																					
XFN00039B	BATTERY ROOM EXHAUST FAN B																							
	5.0	5.5	0.850	0	YES	0.6	0.6	0.7	0.6	0.6	0.7	0.6	0.6	0.7	0.6	0.6	0.7	0.6	0.6	0.7	0.6	0.6	0.7	
	460	4.7	0.800																					
XFN00076	ESF SWGR ROOM 1DB AH UNIT SUPPLY FAN																							
	15.0	15.6	0.830	0	YES	7.0	6.0	7.3	7.0	6.0	7.3	7.0	6.0	7.3	7.0	6.0	7.3	7.0	6.0	7.3	7.0	6.0	7.3	
	460	12.9	0.865																					
XFN00081B	SW BSTR PUMP AREA AH UNIT B SUPPLY FAN																							
	3.0	3.7	0.760	0	YES	3.0	2.8	3.7	3.0	2.8	3.7	3.0	2.8	3.7	3.0	2.8	3.7	3.0	2.8	3.7	0.0	0.0	0.0	5
	460	2.8	0.799																					
XFN00083B	EMER FW PUMP AREA AH UNIT B SUPPLY FAN																							
	5.0	6.2	0.720	0	YES	3.0	2.7	3.7	0.0	0.0	0.0	3.0	2.7	3.7	0.0	0.0	0.0	3.0	2.7	3.7	0.0	0.0	0.0	23
	460	4.5	0.831																					
XFN00106B	SPEED SWITCH ROOMS AH UNIT B SUPPLY FAN																							
	10.0	10.7	0.820	0	YES	7.0	6.1	7.5	7.0	6.1	7.5	7.0	6.1	7.5	7.0	6.1	7.5	7.0	6.1	7.5	7.0	6.1	7.5	
	460	8.8	0.850																					

FSAR TABLE 8.3-3 PART B2
BASIS FOR DIESEL GENERATOR FUEL OIL CONSUMPTION
Connected Automatic and Manual Loading and Unloading of the Diesel Generator
Channel B

Tag Number	Rated Load Data: Hp/kVA / Volts	kVA / kW	PF / Eff	(9) Load Seq (Sec.)	(20) Auto Start	LARGE BREAK LOCA WITH A LOOP — Injection Phase - 1/2 to 1 Hour: (31) Bhp/kVA	(32) kW	(33) kVA	LARGE BREAK LOCA WITH A LOOP — Indefinite Recirc. (8): (31) Bhp/kVA	(32) kW	(33) kVA	STEAM LINE BREAK WITH A LOOP — Short Term Phase - 2 Hours: (31) Bhp/kVA	(32) kW	(33) kVA	STEAM LINE BREAK WITH A LOOP — Long Term. (8): (31) Bhp/kVA	(32) kW	(33) kVA	LOSS OF OFFSITE POWER — Hot Standby - 30 Hours: (31) Bhp/kVA	(32) kW	(33) kVA	LOSS OF OFFSITE POWER — Cold Shutdown (8): (31) Bhp/kVA	(32) kW	(33) kVA	Notes
XMC1DB2X (Continued)																									
XHX00001B CNTRL PWR	HVAC SYSTEM MECHANICAL WATER CHILLER B																								
	15.0	15.0	0.850	0	N/A	7.5	6.4	7.5	7.5	6.4	7.5	7.5	6.4	7.5	7.5	6.4	7.5	7.5	6.4	7.5	7.5	6.4	7.5		
	480	12.8																							
XHX00001C CTRL PWR B	XHX1C CTRL PWR HVAC SYS MECH. WATER CHILLER C CHANNEL B																								
	15.0	15.0	0.850	0	N/A	7.5	6.4	7.5	7.5	6.4	7.5	7.5	6.4	7.5	7.5	6.4	7.5	7.5	6.4	7.5	7.5	6.4	7.5		
	480	12.8																							
XPN07215B 480V PWR	POST ACCIDENT ANALYZER SYSTEM																								
	1.7	1.7	0.850	0	N/A	0.0	0.0	0.0	1.6	1.4	1.6	0.0	0.0	0.0	0.0	0.0	0.0	0.0	0.0	0.0	0.0	0.0	0.0	1	
	480	1.4																							
XTF1FB	XFMR FOR 120V AC NSSS INSTR. MAIN DISTR. PNL 1FB																								
	25.0	25.0	0.850	0	N/A	8.3	7.1	8.3	8.3	7.1	8.3	8.3	7.1	8.3	8.3	7.1	8.3	8.3	7.1	8.3	8.3	7.1	8.3		
	480	21.3																							
Total Load On Motor Control Center: XMC1DB2X							**135.6**	**168.3**		**134.4**	**166.2**		**135.6**	**168.3**		**133.0**	**164.5**		**135.6**	**168.3**		**130.2**	**160.9**		
XMC1DB2Y																									
APN08013B	LIGHTING PANEL 13, ESSENTIAL PANEL, TRAIN B																								
	30.0	30.0	0.850	0	N/A	28.0	23.8	28.0	28.0	23.8	28.0	28.0	23.8	28.0	28.0	23.8	28.0	28.0	23.8	28.0	28.0	23.8	28.0		
	480	25.5																							
IRM00002	RADIATION MONITORING REACTOR BUILDING SAMPLE LINE PUMP 1																								
	1.0	1.3	0.750	0	YES	1.0	1.0	1.3	1.0	1.0	1.3	1.0	1.0	1.3	1.0	1.0	1.3	1.0	1.0	1.3	1.0	1.0	1.3	4	
	460	1.0	0.765																						
IRM00006	RADIATION MONITORING FUEL HANDLING BLDG. EXHAUST PUMP																								
	1.0	1.3	0.750	0	YES	1.0	1.0	1.3	1.0	1.0	1.3	1.0	1.0	1.3	1.0	1.0	1.3	1.0	1.0	1.3	1.0	1.0	1.3	4	
	460	1.0	0.765																						
IRM00011	RADIATION MONITOR AUX. BLDG. VENTS																								
	1.0	1.1	0.850	0	YES	1.0	1.0	1.1	1.0	1.0	1.1	1.0	1.0	1.1	1.0	1.0	1.1	1.0	1.0	1.1	1.0	1.0	1.1	4	
	460	1.0	0.765																						
XBC1A-1B TRAIN B	DC 1A-1B BACKUP BATTERY CHRG																								
	43.3	43.3	0.750	N/A	NO	0.0	0.0	0.0	0.0	0.0	0.0	0.0	0.0	0.0	0.0	0.0	0.0	0.0	0.0	0.0	0.0	0.0	0.0	21	
	480	32.5																							
XFN00028B	CONTROLLED ACCESS EXHAUST FAN B																								
	50.0	48.5	0.850	N/A	NO	0.0	0.0	0.0	0.0	0.0	0.0	0.0	0.0	0.0	0.0	0.0	0.0	0.0	0.0	0.0	0.0	0.0	0.0	22	
	460	41.3	0.904																						
XFN00030B	CONT RM EMERGENCY FILTERING SYS FAN B																								
	40.0	39.3	0.828	0	YES	40.0	32.5	39.3	40.0	32.5	39.3	40.0	32.5	39.3	40.0	32.5	39.3	40.0	32.5	39.3	0.0	0.0	0.0		
	460	32.5	0.918																						
XFN00032B	CONTROL ROOM COOLING UNIT B FAN																								
	25.0	25.5	0.830	0	YES	18.0	15.3	18.4	18.0	15.3	18.4	18.0	15.3	18.4	18.0	15.3	18.4	18.0	15.3	18.4	18.0	15.3	18.4		
	460	21.2	0.880																						
XFN00036B	RELAY ROOM SUPPLY FAN B																								
	15.0	15.6	0.830	0	YES	11.0	9.5	11.4	11.0	9.5	11.4	11.0	9.5	11.4	11.0	9.5	11.4	11.0	9.5	11.4	11.0	9.5	11.4		
	460	12.9	0.865																						

FSAR TABLE 8.3-3 PART B2
BASIS FOR DIESEL GENERATOR FUEL OIL CONSUMPTION
Connected Automatic and Manual Loading and Unloading of the Diesel Generator
Channel B

Tag Number	Rated Load Data: Hp/kVA / Volts	kVA / kW	PF / Eff	(9) Load Seq (Sec.)	(20) Auto Start	LARGE BREAK LOCA WITH A LOOP — Injection Phase - 1/2 to 1 Hour: (31) Bhp/kVA	(32) kW	(33) kVA	LARGE BREAK LOCA WITH A LOOP — Indefinite Recirc. (8): (31) Bhp/kVA	(32) kW	(33) kVA	STEAM LINE BREAK WITH A LOOP — Short Term Phase - 2 Hours: (31) Bhp/kVA	(32) kW	(33) kVA	STEAM LINE BREAK WITH A LOOP — Long Term. (8): (31) Bhp/kVA	(32) kW	(33) kVA	LOSS OF OFFSITE POWER — Hot Standby - 30 Hours: (31) Bhp/kVA	(32) kW	(33) kVA	LOSS OF OFFSITE POWER — Cold Shutdown (8): (31) Bhp/kVA	(32) kW	(33) kVA	Notes
XMC1DB2Y (Continued)																										
XFN00041B	COMPUTER ROOM SUPPLY FAN B (UNIT 1)																									
	5.0	5.3	0.850	N/A	NO	0.0	0.0	0.0	0.0	0.0	0.0	0.0	0.0	0.0	0.0	0.0	0.0	0.0	0.0	0.0	0.0	0.0	0.0	0.0	0.0	22
	460	4.5	0.831																							
XFN00046B	CHARGING/SI PUMP RM 3 COOLING UNIT FAN																									
	3.0	3.7	0.760	0	YES	3.0	2.8	3.7	3.0	2.8	3.7	3.0	2.8	3.7	0.0	0.0	0.0	3.0	2.8	3.7	0.0	0.0	0.0			
	460	2.8	0.799																							
XFN00049B	RHR/SPRAY PUMP ROOM 2 COOLING UNIT FAN																									
	3.0	3.7	0.760	0	YES	3.0	2.8	3.7	3.0	2.8	3.7	3.0	2.8	3.7	3.0	2.8	3.7	3.0	2.8	3.7	3.0	2.8	3.7			
	460	2.8	0.799																							
XFN00087B	CONTROLLED ACCESS LAB HOOD EXHAUST FAN B																									
	5.0	5.3	0.850	N/A	NO	0.0	0.0	0.0	0.0	0.0	0.0	0.0	0.0	0.0	0.0	0.0	0.0	0.0	0.0	0.0	0.0	0.0	0.0	0.0	0.0	22
	460	4.5	0.831																							
XFN00133	AUX BLDG MCC-SWGR ROOM COOLING UNIT FAN																									
	5.0	6.2	0.720	0	YES	3.4	3.1	4.2	3.4	3.1	4.2	3.4	3.1	4.2	3.4	3.1	4.2	3.4	3.1	4.2	3.4	3.1	4.2			
	460	4.5	0.831																							
XIT05903	INSTRUMENT SUPPLY INVERTERS																									
	10.0	10.0	0.850	0	N/A	7.6	6.5	7.6	7.6	6.5	7.6	7.6	6.5	7.6	7.6	6.5	7.6	7.6	6.5	7.6	7.6	6.5	7.6			
	480	8.5																								
XIT05904	INSTRUMENT SUPPLY INVERTERS																									
	10.0	10.0	0.850	0	N/A	5.4	4.6	5.4	5.4	4.6	5.4	5.4	4.6	5.4	5.4	4.6	5.4	5.4	4.6	5.4	5.4	4.6	5.4			
	480	8.5																								
XPN00040 TRAIN B	PUMP AUXILIARIES TRANSFER PNL-XPP0043C																									
	1.0	1.0	0.850	0	N/A	1.0	0.8	1.0	1.0	0.8	1.0	1.0	0.8	1.0	1.0	0.8	1.0	1.0	0.8	1.0	1.0	0.8	1.0	17		
	480	0.8																								
XPN02022	REFLING WTR STRGE TANK & PIPING HEAT TRACING CENTRLZD CONT P																								RN 12-006	
	15.0	15.0	1.000	0	YES	0.0	0.0	0.0	0.0	0.0	0.0	0.0	0.0	0.0	0.0	0.0	0.0	0.0	0.0	0.0	0.0	0.0	0.0			
	460	6.0																								
XPN02008	REAC MU WTR STRGE TANK&PIPING HEAT TRACING CENTRLZD CONTRL P																									
	6.0	6.0	1.000	0	YES	0.0	0.0	0.0	0.0	0.0	0.0	0.0	0.0	0.0	0.0	0.0	0.0	0.0	0.0	0.0	0.0	0.0	0.0			
	460	6.0																								
XPN02020	SODIUM HYDROXIDE SPRAY SYSTEM HEAT TRACING CENTRLZD CONT PN																								RN 12-006	
	3.0	3.0	1.000	0	YES	0.0	0.0	0.0	0.0	0.0	0.0	0.0	0.0	0.0	0.0	0.0	0.0	0.0	0.0	0.0	0.0	0.0	0.0			
	460	3.0																								
XPP00013B	BORIC ACID PUMPS																									
	15.5	15.7	0.850	0	NO	0.0	0.0	0.0	0.0	0.0	0.0	0.0	0.0	0.0	0.0	0.0	0.0	0.0	0.0	0.0	0.0	0.0	0.0			
	460	13.4	0.865																							
XPP00043B PP AUX OIL	CHARGING/SI PUMP B AUXILIARY OIL PUMP ALOP2																									
	2.0	2.2	0.850	0	YES	1.4	1.3	1.5	1.4	1.3	1.5	1.4	1.3	1.5	1.4	1.3	1.5	1.4	1.3	1.5	0.0	0.0	0.0			
	460	1.8	0.808																							
XTF05014	SECURITY SYSTEM VIA XET04006																									
	37.5	37.5	0.850	0	N/A	30.0	25.5	30.0	30.0	25.5	30.0	30.0	25.5	30.0	30.0	25.5	30.0	30.0	25.5	30.0	30.0	25.5	30.0	17		
	480	31.9																								

FSAR TABLE 8.3-3 PART B2
BASIS FOR DIESEL GENERATOR FUEL OIL CONSUMPTION
Connected Automatic and Manual Loading and Unloading of the Diesel Generator
Channel B

Tag Number	Rated Load Data: Hp/kVA / Volts	kVA / kW	PF / Eff	(9) Load Seq (Sec.)	(20) Auto Start	LARGE BREAK LOCA WITH A LOOP — Injection Phase - 1/2 to 1 Hour: (31) Bhp/kVA	(32) kW	(33) kVA	LARGE BREAK LOCA WITH A LOOP — Indefinite Recirc. (8): (31) Bhp/kVA	(32) kW	(33) kVA	STEAM LINE BREAK WITH A LOOP — Short Term Phase - 2 Hours: (31) Bhp/kVA	(32) kW	(33) kVA	STEAM LINE BREAK WITH A LOOP — Long Term. (8): (31) Bhp/kVA	(32) kW	(33) kVA	LOSS OF OFFSITE POWER — Hot Standby - 30 Hours: (31) Bhp/kVA	(32) kW	(33) kVA	LOSS OF OFFSITE POWER — Cold Shutdown (8): (31) Bhp/kVA	(32) kW	(33) kVA	Notes
XMC1DB2Y (Continued)																										
XTF05930	BACKUP MET. TOWER DISTR. PANEL																									
	0.0	0.0	0.850	0	N/A	15.0	12.8	15.0	15.0	12.8	15.0	15.0	12.8	15.0	15.0	12.8	15.0	15.0	12.8	15.0	15.0	12.8	15.0		
	480	0.0																								
XTF08024B	XFMR FOR LIGHTING PANEL 24, ESSENTIAL PANEL, TRAIN B																									
	15.0	15.0	0.850	0	N/A	7.5	6.4	7.5	7.5	6.4	7.5	7.5	6.4	7.5	7.5	6.4	7.5	7.5	6.4	7.5	7.5	6.4	7.5		
	480	12.8																								
XTF09006B	RECEPTACLE TRANSFORMER #6																									
	10.0	10.0	0.850	0	N/A	0.0	0.0	0.0	0.0	0.0	0.0	0.0	0.0	0.0	0.0	0.0	0.0	0.0	0.0	0.0	0.0	0.0	0.0		
	480	8.5																								
Total Load On Motor Control Center: XMC1DB2Y							**150.5**	**180.5**		**150.5**	**180.5**		**150.5**	**180.5**		**147.7**	**176.8**		**150.5**	**180.5**		**113.9**	**136.1**		
XMC1DB2Z																										
APN08038B	LIGHTING PANEL 38, ESENTIAL PANEL																									
	45.0	45.0	0.850	0	N/A	3.0	2.5	3.0	3.0	2.5	3.0	3.0	2.5	3.0	3.0	2.5	3.0	3.0	2.5	3.0	3.0	2.5	3.0		
	480	38.3																								
XAC00008C	AIR STARTING PACKAGE - DIESEL GEN.																									
	15.0	15.2	0.850	0	YES	15.5	13.4	15.7	0.0	0.0	0.0	15.5	13.4	15.7	0.0	0.0	0.0	15.5	13.4	15.7	0.0	0.0	0.0		24
	460	12.9	0.865																							
XAC00008D	AIR STARTING PACKAGE - DIESEL GEN.																									
	15.0	15.2	0.850	0	NO	0.0	0.0	0.0	0.0	0.0	0.0	0.0	0.0	0.0	0.0	0.0	0.0	0.0	0.0	0.0	0.0	0.0	0.0		
	460	12.9	0.865																							
XFN00045A	DG AREA B VENTILATION AIR SUPPLY FAN A																									
	30.0	34.0	0.824	0	YES	25.0	23.3	28.3	25.0	23.3	28.3	25.0	23.3	28.3	25.0	23.3	28.3	25.0	23.3	28.3	25.0	23.3	28.3		
	460	28.0	0.800																							
XFN00045B	DG AREA B VENTILATION AIR SUPPY FAN B																									
	30.0	34.0	0.824	0	YES	25.0	23.3	28.3	25.0	23.3	28.3	25.0	23.3	28.3	25.0	23.3	28.3	25.0	23.3	28.3	25.0	23.3	28.3		
	460	28.0	0.800																							
XMC1DB2Z HTR	SPACE HTRS FOR XMC1DB2Z																									
	0.5	0.5	1.000	N/A	N/A	0.5	0.5	0.5	0.5	0.5	0.5	0.5	0.5	0.5	0.5	0.5	0.5	0.5	0.5	0.5	0.5	0.5	0.5		
	480	0.5																								
XPN00048	1B DIESEL POWER PANEL																									
	56.0	56.0	0.850	0	N/A	56.0	47.6	56.0	56.0	47.6	56.0	56.0	47.6	56.0	56.0	47.6	56.0	56.0	47.6	56.0	56.0	47.6	56.0		
	480	47.6																								
XPP00004B	DG FUEL OIL TRANSFER PUMP 4B																									
	1.0	1.4	0.720	0	YES	0.6	0.6	0.8	0.6	0.6	0.8	0.6	0.6	0.8	0.6	0.6	0.8	0.6	0.6	0.8	0.6	0.6	0.8		
	460	1.0	0.765																							
XPP00141B	DG FUEL OIL TRANSFER PUMP 141B																									
	1.0	1.4	0.720	0	YES	0.6	0.6	0.8	0.6	0.6	0.8	0.6	0.6	0.8	0.6	0.6	0.8	0.6	0.6	0.8	0.6	0.6	0.8		
	460	1.0	0.765																							
XPP00146B	DIESEL GENERATOR BLDG SUMP PUMP																									
	2.0	2.2	0.850	N/A	NO	0.0	0.0	0.0	0.0	0.0	0.0	0.0	0.0	0.0	0.0	0.0	0.0	0.0	0.0	0.0	0.0	0.0	0.0		22
	460	1.8	0.808																							
Total Load On Motor Control Center: XMC1DB2Z							**111.9**	**133.5**		**98.5**	**117.8**		**111.9**	**133.5**		**98.5**	**117.8**		**111.9**	**133.5**		**98.5**	**117.8**		

FSAR TABLE 8.3-3 PART B2
BASIS FOR DIESEL GENERATOR FUEL OIL CONSUMPTION
Connected Automatic and Manual Loading and Unloading of the Diesel Generator
Channel B

Tag Number	Rated Load Data			(9)	(20)	LARGE BREAK LOCA WITH A LOOP						STEAM LINE BREAK WITH A LOOP						LOSS OF OFFSITE POWER						Notes
						Injection Phase - 1/2 to 1 Hour			Indefinite Recirc. (8)			Short Term Phase - 2 Hours			Long Term. (8)			Hot Standby - 30 Hours			Cold Shutdown (8)			
	Hp/kVA	kVA	PF	Seq	Auto	(31)	(32)	(33)	(31)	(32)	(33)	(31)	(32)	(33)	(31)	(32)	(33)	(31)	(32)	(33)	(31)	(32)	(33)	
	Volts	kW	Eff	(Sec.)	Start	Bhp/kVA	kW	kVA	Bhp/kVA	kW	kVA	Bhp/kVA	kW	kVA	Bhp/kVA	kW	kVA	Bhp/kVA	kW	kVA	Bhp/kVA	kW	kVA	
XMC1EB1X																								
APN04007	SW BLDG POWER PANEL #2																							
	60.0	60.0	0.850	0	N/A	25.0	21.3	25.0	25.0	21.3	25.0	25.0	21.3	25.0	25.0	21.3	25.0	25.0	21.3	25.0	25.0	21.3	25.0	
	480	51.0																						
APN08032B	LIGHTING PANEL 32, ESSENTIAL PANEL, TRAIN B POWER FEED																							
	10.0	10.0	0.850	0	N/A	6.0	5.1	6.0	6.0	5.1	6.0	6.0	5.1	6.0	6.0	5.1	6.0	6.0	5.1	6.0	6.0	5.1	6.0	
	480	8.5																						
XFN00080B	SERVICE WATER BUILDING SUPPLY FAN B																							
	50.0	48.6	0.838	0	YES	58.0	47.2	56.4	58.0	47.2	56.4	58.0	47.2	56.4	58.0	47.2	56.4	58.0	47.2	56.4	58.0	47.2	56.4	
	460	40.7	0.916																					
XPP00147B	SERVICE WATER PUMPHOUSE SUMP PUMP																							
	1.0	1.1	0.850	N/A	NO	0.0	0.0	0.0	0.0	0.0	0.0	0.0	0.0	0.0	0.0	0.0	0.0	0.0	0.0	0.0	0.0	0.0	0.0	22
	460	1.0	0.765																					
XRS00002B	SW TRAVELING SCREEN B																							
	1.0	1.1	0.850	0	NO	1.0	1.0	1.1	1.0	1.0	1.1	1.0	1.0	1.1	1.0	1.0	1.1	1.0	1.0	1.1	1.0	1.0	1.1	22
	460	1.0	0.765																					
Total Load On Motor Control Center: XMC1EB1X							**74.6**	**88.5**		**74.6**	**88.5**		**74.6**	**88.5**		**74.6**	**88.5**		**74.6**	**88.5**		**74.6**	**88.5**	
XMC1EC1X																								
XRS00002C	SW TRAVELING SCREEN C																							
	1.0	1.1	0.850	N/A	NO	0.0	0.0	0.0	0.0	0.0	0.0	0.0	0.0	0.0	0.0	0.0	0.0	0.0	0.0	0.0	0.0	0.0	0.0	16,22
	460	1.0	0.765																					
Total Load On Motor Control Center: XMC1EC1X							**0.0**	**0.0**		**0.0**	**0.0**		**0.0**	**0.0**		**0.0**	**0.0**		**0.0**	**0.0**		**0.0**	**0.0**	
XSW1DB																								
MPP00001B	COMPONENT COOLING PUMP B MOTOR																							
	600.0	535.6	0.914	15	YES	550.0	448.8	491.0	550.0	448.8	491.0	550.0	448.8	491.0	550.0	448.8	491.0	550.0	448.8	491.0	550.0	448.8	491.0	2,11,30
	6900	489.6	0.914																					
MPP00001C TRAIN B	COMPONENT CLG PP C FED VIA XES2001C & XET02001C																							
	600.0	600.0	0.866	N/A	No	0.0	0.0	0.0	0.0	0.0	0.0	0.0	0.0	0.0	0.0	0.0	0.0	0.0	0.0	0.0	0.0	0.0	0.0	16
	6900	519.6																						
XPP00021B	EMERGENCY FEEDWATER PUMP B																							
	600.0	587.8	0.825	20	YES	550.0	444.5	538.8	0.0	0.0	0.0	550.0	444.5	538.8	0.0	0.0	0.0	550.0	444.5	538.8	0.0	0.0	0.0	11
	6900	484.9	0.923																					
XPP00038B	REACTOR BUILDING SPRAY PUMP B																							
	400.0	367.0	0.880	N/A	YES	400.0	322.9	367.0	420.0	339.1	385.3	400.0	322.9	367.0	400.0	322.9	367.0	0.0	0.0	0.0	0.0	0.0	0.0	3
	6900	322.9	0.924																					
XPP00043B	CHARGING/SI PUMP B																							
	900.0	778.0	0.922	0	YES	860.0	685.4	743.4	860.0	685.4	743.4	860.0	685.4	743.4	0.0	0.0	0.0	720.0	573.8	622.4	0.0	0.0	0.0	14
	6900	717.3	0.936																					

RN 15-025

RN 15-025

FSAR TABLE 8.3-3 PART B2
BASIS FOR DIESEL GENERATOR FUEL OIL CONSUMPTION
Connected Automatic and Manual Loading and Unloading of the Diesel Generator
Channel B

Tag Number	Rated Load Data: Hp/kVA / Volts	kVA / kW	PF / Eff	(9) Load Seq (Sec.)	(20) Auto Start	LARGE BREAK LOCA WITH A LOOP — Injection Phase - 1/2 to 1 Hour: (31) Bhp/kVA	(32) kW	(33) kVA	LARGE BREAK LOCA WITH A LOOP — Indefinite Recirc. (8): (31) Bhp/kVA	(32) kW	(33) kVA	STEAM LINE BREAK WITH A LOOP — Short Term Phase - 2 Hours: (31) Bhp/kVA	(32) kW	(33) kVA	STEAM LINE BREAK WITH A LOOP — Long Term. (8): (31) Bhp/kVA	(32) kW	(33) kVA	LOSS OF OFFSITE POWER — Hot Standby - 30 Hours: (31) Bhp/kVA	(32) kW	(33) kVA	LOSS OF OFFSITE POWER — Cold Shutdown (8): (31) Bhp/kVA	(32) kW	(33) kVA	Notes
XSW1DB (Continued)																									
XPP00043C Train B	Charging/SI Pump C Fed via XET2002C																								
	900.0 / 460	778.0 / 717.3	0.922 / 0.936	N/A	NO	0.0	0.0	0.0	0.0	0.0	0.0	0.0	0.0	0.0	0.0	0.0	0.0	0.0	0.0	0.0	0.0	0.0	0.0	0.0	16
XTF04102	PRESSURIZER HEATERS BACKUP GROUP 2																								
	750.0 / 480	750.0 / 750.0	1.000	N/A	NO	0.0	0.0	0.0	0.0	0.0	0.0	0.0	0.0	0.0	0.0	0.0	0.0	485.1	485.1	485.1	0.0	0.0	0.0	1
Total Load On Switchgear: XSW1DB							**1901.7**	**2140.2**		**1473.3**	**1619.8**		**1901.7**	**2140.2**		**771.7**	**858.0**		**1952.3**	**2137.3**		**448.8**	**491.0**	
XSW1DB1																									
APN01DB1	SWITCHGEAR XSW1DB1 DISTRIBUTION PANEL																								
	10.0 / 480	10.0 / 8.5	0.850	0	N/A	9.0	7.6	9.0	9.0	7.6	9.0	9.0	7.6	9.0	9.0	7.6	9.0	9.0	7.6	9.0	9.0	7.6	9.0	
XAC00012	SUPPLEMENTAL INSTRUMENT AIR COMPRESSOR																								
	150.0 / 460	141.0 / 121.2	0.860 / 0.923	N/A	NO	0.0	0.0	0.0	150.0	121.2	141.0	0.0	0.0	0.0	150.0	121.2	141.0	150.0	121.2	141.0	150.0	121.2	141.0	1
XFN00019B	CHARCOAL EXHAUST FAN B																								
	125.0 / 460	119.5 / 101.6	0.850 / 0.918	N/A	NO	0.0	0.0	0.0	125.0	101.6	119.5	0.0	0.0	0.0	125.0	101.6	119.5	125.0	101.6	119.5	125.0	101.6	119.5	1,26
XFN00019D	AUXILIARY BUILDING CHARCOAL EXHAUST FAN D																								
	125.0 / 460	119.5 / 101.6	0.850 / 0.918	N/A	NO	0.0	0.0	0.0	0.0	0.0	0.0	0.0	0.0	0.0	0.0	0.0	0.0	0.0	0.0	0.0	0.0	0.0	0.0	
XFN00064B MFN00096B	REACTOR BUILDING COOLING UNIT FAN (MFN0096B)																								
	275.0 / 460	246.5 / 219.2	0.889 / 0.936	N/A	NO	0.0	0.0	0.0	0.0	0.0	0.0	0.0	0.0	0.0	0.0	0.0	0.0	0.0	0.0	0.0	0.0	0.0	0.0	
XFN00064B MFN00097B	REACTOR BUILDING COOLING UNIT FAN (MFN0097B)																								
	75.0 / 460	77.4 / 60.3	0.779 / 0.928	25	YES	90.0	72.3	92.9	90.0	72.3	92.9	90.0	72.3	92.9	90.0	72.3	92.9	90.0	72.3	92.9	90.0	72.3	92.9	6,14,27
XFN00065B MFN00096D	REACTOR BUILDING COOLING UNIT FAN (MFN0096D)																								
	275.0 / 460	246.5 / 219.2	0.889 / 0.936	N/A	NO	0.0	0.0	0.0	0.0	0.0	0.0	0.0	0.0	0.0	0.0	0.0	0.0	0.0	0.0	0.0	0.0	0.0	0.0	
XFN00065B MFN00097D	REACTOR BUILDING COOLING UNIT FAN (MFN0097D)																								
	75.0 / 460	77.4 / 60.3	0.779 / 0.928	N/A	NO	0.0	0.0	0.0	0.0	0.0	0.0	0.0	0.0	0.0	0.0	0.0	0.0	0.0	0.0	0.0	0.0	0.0	0.0	14,27
XHX00001B	HVAC SYSTEM MECHANICAL WATER CHILLER B																								
	321.0 / 460	286.1 / 257.5	0.900 / 0.930	30	YES	321.0	257.5	286.1	321.0	257.5	286.1	321.0	257.5	286.1	321.0	257.5	286.1	321.0	257.5	286.1	321.0	257.5	286.1	13
XHX00001C TRAIN B	HVAC SYSTEM MECHANICAL WATER CHILLER C - LOAD FOR TRAIN B																								
	321.0 / 460	286.1 / 257.5	0.900 / 0.930	N/A	NO	0.0	0.0	0.0	0.0	0.0	0.0	0.0	0.0	0.0	0.0	0.0	0.0	0.0	0.0	0.0	0.0	0.0	0.0	16
XPP00031B	RESIDUAL HEAT REMOVAL PUMP B																								
	300.0 / 460	262.2 / 239.6	0.914 / 0.934	0	YES	285.0	227.6	249.1	300.0	239.6	262.2	285.0	227.6	249.1	285.0	227.6	249.1	285.0	227.6	249.1	300.0	239.6	262.2	

FSAR TABLE 8.3-3 PART B2
BASIS FOR DIESEL GENERATOR FUEL OIL CONSUMPTION
Connected Automatic and Manual Loading and Unloading of the Diesel Generator
Channel B

Tag Number	Rated Load Data: Hp/kVA / Volts	kVA / kW	PF / Eff	(9) Load Seq (Sec.)	(20) Auto Start	LARGE BREAK LOCA WITH A LOOP — Injection Phase - 1/2 to 1 Hour: (31) Bhp/kVA	(32) kW	(33) kVA	LARGE BREAK LOCA WITH A LOOP — Indefinite Recirc. (8): (31) Bhp/kVA	(32) kW	(33) kVA	STEAM LINE BREAK WITH A LOOP — Short Term Phase - 2 Hours: (31) Bhp/kVA	(32) kW	(33) kVA	STEAM LINE BREAK WITH A LOOP — Long Term. (8): (31) Bhp/kVA	(32) kW	(33) kVA	LOSS OF OFFSITE POWER — Hot Standby - 30 Hours: (31) Bhp/kVA	(32) kW	(33) kVA	LOSS OF OFFSITE POWER — Cold Shutdown (8): (31) Bhp/kVA	(32) kW	(33) kVA	Notes
XSW1DB1 (Continued)																									
XPP00040B	REACTOR MAKE-UP WATER PUMP B																								
	60.0	58.3	0.850	N/A	NO	0.0	0.0	0.0	0.0	0.0	0.0	0.0	0.0	0.0	0.0	0.0	0.0	0.0	0.0	0.0	0.0	0.0	0.0	0.0	
	460	49.6	0.903																						
XPP00045B	SERVICE WATER BOOSTER PUMP B																								
	350.0	303.5	0.920	35	YES	250.0	199.5	216.8	250.0	199.5	216.8	250.0	199.5	216.8	250.0	199.5	216.8	250.0	199.5	216.8	0.0	0.0	0.0	7,14	
	460	279.3	0.935																						
Total Load On Switchgear: XSW1DB1							**764.6**	**853.9**		**999.4**	**1127.5**		**764.6**	**853.9**		**987.4**	**1114.4**		**987.4**	**1114.4**		**800.0**	**910.6**		
XSW1DB2																									
APN01DB2	SWITCHGEAR XSW1DB2 DISTR. PNL.																								
	10.0	10.0	0.850	0	N/A	9.0	7.6	9.0	9.0	7.6	9.0	9.0	7.6	9.0	9.0	7.6	9.0	9.0	7.6	9.0	9.0	7.6	9.0		
	480	8.5																							
XFN00023B	FUEL BUILDING EXHAUST FAN 23B																								
	60.0	59.0	0.831	25	YES	56.0	45.8	55.1	56.0	45.8	55.1	56.0	45.8	55.1	56.0	45.8	55.1	56.0	45.8	55.1	56.0	45.8	55.1		
	460	49.0	0.913																						
XHR00004B	HYDROGEN RECOMBINER B																								
	75.0	75.0	1.000	N/A	NO	0.0	0.0	0.0	75.0	75.0	75.0	0.0	0.0	0.0	0.0	0.0	0.0	0.0	0.0	0.0	0.0	0.0	0.0	1,28	
	480	75.0																							
XIT05936 TRAIN B	INCOMING TRAIN B POWER																								
	125.0	125.0	1.000	0	N/A	105.7	105.7	105.7	105.7	105.7	105.7	105.7	105.7	105.7	105.7	105.7	105.7	105.7	105.7	105.7	105.7	105.7	105.7	15	
	480	125.0																							
XPP00032B	SPENT FUEL PIT COOLING PUMP B																								
	75.0	73.4	0.840	N/A	NO	0.0	0.0	0.0	60.0	49.3	58.7	0.0	0.0	0.0	60.0	49.3	58.7	60.0	49.3	58.7	60.0	49.3	58.7	1,29	
	460	61.6	0.908																						
XPP00048B	HVAC SYSTEM CHILL WATER PUMP B																								
	60.0	53.4	0.930	10	YES	48.0	39.7	42.7	48.0	39.7	42.7	48.0	39.7	42.7	48.0	39.7	42.7	48.0	39.7	42.7	48.0	39.7	42.7	13	
	460	49.6	0.902																						
XPP00048C TRAIN B	CHILLED WATER PUMP C - LOAD FOR TRAIN B																								
	50.0	44.4	0.920	N/A	NO	0.0	0.0	0.0	0.0	0.0	0.0	0.0	0.0	0.0	0.0	0.0	0.0	0.0	0.0	0.0	0.0	0.0	0.0	16	
	460	40.9	0.913																						
Total Load On Switchgear: XSW1DB2							**198.8**	**212.5**		**323.1**	**346.1**		**198.8**	**212.5**		**248.1**	**271.2**		**248.1**	**271.2**		**248.1**	**271.2**		
XSW1EB																									
MPP00039B	SERVICE WATER PUMP B MOTOR																								
	700.0	622.0	0.922	10	YES	650.0	532.5	577.6	650.0	532.5	577.6	650.0	532.5	577.6	650.0	532.5	577.6	650.0	532.5	577.6	650.0	532.5	577.6	12	
	6900	573.5	0.911																						
MPP00039C TRAIN B	SERVICE WATER PUMP C MOTOR - LOAD FOR TRAIN B																								
	700.0	622.0	0.922	N/A	NO	0.0	0.0	0.0	0.0	0.0	0.0	0.0	0.0	0.0	0.0	0.0	0.0	0.0	0.0	0.0	0.0	0.0	0.0	16	
	6900	573.5	0.911																						
Total Load On Switchgear: XSW1EB							**532.5**	**577.6**		**532.5**	**577.6**		**532.5**	**577.6**		**532.5**	**577.6**		**532.5**	**577.6**		**532.5**	**577.6**		

FSAR TABLE 8.3-3 PART B2
BASIS FOR DIESEL GENERATOR FUEL OIL CONSUMPTION
Connected Automatic and Manual Loading and Unloading of the Diesel Generator
Channel B

Tag Number	Rated Load Data Hp/kVA / Volts	kVA / kW	PF / Eff	(9) Load Seq (Sec.)	(20) Auto Start	LARGE BREAK LOCA WITH A LOOP — Injection Phase - 1/2 to 1 Hour (31) Bhp/kVA	(32) kW	(33) kVA	LARGE BREAK LOCA WITH A LOOP — Indefinite Recirc. (8) (31) Bhp/kVA	(32) kW	(33) kVA	STEAM LINE BREAK WITH A LOOP — Short Term Phase - 2 Hours (31) Bhp/kVA	(32) kW	(33) kVA	STEAM LINE BREAK WITH A LOOP — Long Term. (8) (31) Bhp/kVA	(32) kW	(33) kVA	LOSS OF OFFSITE POWER — Hot Standby - 30 Hours (31) Bhp/kVA	(32) kW	(33) kVA	LOSS OF OFFSITE POWER — Cold Shutdown (8) (31) Bhp/kVA	(32) kW	(33) kVA	Notes
XSW1EB1																									
APN01EB1	SWITCHGEAR XSW1EB1 DISTRIBUTION PANEL																								
	10.0 / 480	10.0 / 8.5	0.850	0	N/A	9.0	7.6	9.0	9.0	7.6	9.0	9.0	7.6	9.0	9.0	7.6	9.0	9.0	7.6	9.0	9.0	7.6	9.0		
Total Load On Switchgear: XSW1EB1							**7.6**	**9.0**		**7.6**	**9.0**		**7.6**	**9.0**		**7.6**	**9.0**		**7.6**	**9.0**		**7.6**	**9.0**		
Subtotal Load On The Diesel Generator:							**3877.9**	**4363.9**		**3846.0**	**4292.7**		**3877.9**	**4363.9**		**3053.2**	**3437.6**		**4252.6**	**4740.0**		**2506.2**	**2822.4**		
Cable Losses:							10.0	10.0		10.0	10.0		10.0	10.0		10.0	10.0		10.0	10.0		10.0	10.0		
Transformer Losses:							32.0	32.0		32.0	32.0		32.0	32.0		32.0	32.0		32.0	32.0		32.0	32.0		
Generator Exciter Load:							25.0	30.0		25.0	30.0		25.0	30.0		25.0	30.0		25.0	30.0		25.0	30.0		
Total Generator Load With Optional Loads:							**3944.9**	**4435.9**		**3913.0**	**4364.7**		**3944.9**	**4435.9**		**3120.2**	**3509.6**		**4319.6**	**4812.0**		**2573.2**	**2894.4**	**10**	
Optional Loads:							0.0	0.0		400.6	455.6		0.0	0.0		324.2	379.0		809.3	864.1		324.2	379.0		
Total Generator Load Without Optional Loads:							**3944.8**	**4435.9**		**3512.4**	**3909.1**		**3944.8**	**4435.9**		**2796.1**	**3130.5**		**3510.3**	**3947.9**		**2249.1**	**2515.4**		

Total Records Printed: 89

FSAR TABLE 8.3-3 PART B2
BASIS FOR DIESEL GENERATOR FUEL OIL CONSUMPTION
Connected Automatic and Manual Loading and Unloading of the Diesel Generator
Channel B

Notes:

1 This is an optional load which can be started manually. It may be added if the DG loading conditions permit, and this load was not considered for fuel oil storage requirements since it is not a required load.
2 The pump is normally in low speed but is assumed to be auto-started in high speed. The speed change switch is manually operated. The pump will be operated in high speed for approximately 8 hours for the first 7 days following a DBE. If both DGs are running, only one train's pump will be in high speed during the plant shutdown.
3 The pump starts on receipt of a spray initiation signal.
4 The motor is not required for the accident scenarios but the motor will be running as it is not locked out by the load sequencer.
5 The motor is running in the Hot Standby scenario as the SWBP is automatically started by the load sequencer.
6 The motor is not required for the LOOP - Hot standby / Cold shutdown scenarios but is auto started by the load sequencer and expected to remain on for air circulation related purposes.
7 The motor is not required for the LOOP - Hot standby scenario but is auto started by the load sequencer.
8 The equipment is required to be operable for six months following an accident.
9 Time 0 indicates the emergency diesel generator has started and reached no load speed and voltage, at which the circuit breaker connecting to the 7200 volt bus has closed.
10 Total includes the RHR pump and all manual loads whose application will be limited so that neither the 2 hour rating (4676 kW) is exceeded for more than 2 hours nor the continuous rating of 4250 kW is exceeded.
11 The required safety function is for emergency core cooling.
12 The required safety function is for emergency core cooling and containment cooling.
13 The required safety function is for equipment area cooling.
14 The required safety function is for containment cooling.
15 This inverter is assumed to be running on this diesel generator. It is fed via a manual switchgear breaker.
16 The "C" train equipment is assumed to be not running as the normal train equipment is running.
17 This equipment is assumed to be supplied from this diesel generator.
18 Generator efficiency is assumed to be taken into account by the diesel manufacturer as the load limit is based on generator output kW (including the exciter) as monitored at the MCB.
19 The dc powered oil pumps associated with the turning gear are included in the battery charger loads.
20 For the Auto-Start columns, YES means the load is able to automatically start based on its control circuitry, NO means it does not, and N/A means the load is continuous and not subject to starting and stopping.
21 The normal battery charger is assumed in service.
22 The load is locked out on receipt of an SI signal.
23 The fan runs only when the EFWP is running.
24 The compressor runs only to recharge the air start system. It is assumed to be running in the first hour only.
25 XTG00001 will be running less than 24 hours total during the 7 days following a DBE.
26 The fan is expected to be manually started within the first 30 hours and is therefore shown as a load for the LOOP/Hot Standby mode.
27 Only 1 out of 2 RBCU fans is required to run post accident as selected.
28 The H2 recombiner will be operated as needed to support post accident response.
29 The pump will be operated as needed to maintain spent fuel pool temperatures within acceptable limits.
30 The component cooling water pump slow speed ratings are 250hp, .8094 PF, .9114 Efficiency, and 250kVA.
31 The "BHP/kVA" field lists the demand load that has been calculated for the specified event.
32 The "kW" field equals BHP/kVA x 0.746 kW/HP / EFF for motors. For non-motor loads this field equals BHP / kVA x PF.
33 The "kVA" field equals BHP / kVA x 0.746 kW/HP / (EFF x PF) for motors. For non-motor loads this field equals BHP / kVA.

TABLE 8.3-3a

DIESEL GENERATOR PROTECTIVE DEVICES

Device	Protective Relay Function if Diesel Start is Initiated By: ESF OR Undervoltage	Test Start Switch	
67 DG Motoring - reverse power flow	Alarm	Trip [2]	RN 98-027 R1
51 DG Ground Overcurrent	Alarm	Trip [2]	
51VDG Time overcurrent - voltage controlled	Alarm	Trip [2]	
46 DG Negative phase sequence	Alarm	Trip [2]	
64 FDG Field ground relay	Alarm	Alarm	
87 DG Generator differential	Trip [3]	Trip [3]	
40 DG Field failure relay	Alarm	Trip [2]	RN 98-027 R1
Lube oil pressure low (4 switches)	Trip [1] [3]	Trip [3]	
Engine overspeed	Trip [3]	Trip [3]	
Crankcase pressure high	Alarm	Trip [3]	
Lube Oil temperature high	Alarm	Trip [3]	
Jacket coolant temperature high	Alarm	Trip [3]	
59 Overvoltage	Alarm	Alarm	
Fuel Oil Pressure Low	Alarm	Alarm	
Start failure	Alarm	Alarm	RN 98-027 R1
Barring Device Engaged	Prevent Start	Prevent start	

Note:

1. Trip occurs on actuation of 2 of 4 switches if at least 1 of the 2 actuated switches has setpoint of 60 psi. Setpoints are at 70, 65, 60, and 60 psi.

2. Trips Diesel Generator Breaker only.

3. Trips Diesel Generator Breaker and Diesel Generator Engine.

TABLE 8.3-3b

ENGINEERED SAFETY FEATURES BUS INDICATORS

Indicator Type	Function	Location
GE Type AB-40, Frequency Meter	Diesel generator A, frequency	Main Control Board (MCB) panel XCP6117
GE Type AB-40, A-C Wattmeter	Diesel generator A, watts	MCB panel XCP6117
GE Type AB-40, A-C Voltmeter	Diesel generator A, volts	MCB panel XCP6117
GE Type AB-40, A-C Wattmeter	ESF transformer, watts	MCB panel XCP6117
GE Type AB-40, A-C Voltmeter	ESF bus 1DA, volts	MCB panel XCP6117
GE Type AB-40, A-C Varmeter	ESF transformer, vars	MCB panel XCP6117
GE Type 180, A-C Ammeter	Diesel generator A, amperes	MCB panel XCP6117
GE Type 180, A-C Ammeter	ESF transformer, amperes	MCB panel XCP6117
GE Type 180, A-C Ammeter	7.2 kV bus 1DA feeder, amperes	MCB panel XCP6117
GE Type AB-40, Frequency Meter	Diesel generator B, frequency	MCB panel XCP6117
GE Type AB-40, A-C Wattmeter	Diesel generator B, watts	MCB panel XCP6117
GE Type AB-40, A-C Voltmeter	Diesel generator B, volts	MCB panel XCP6117
GE Type AB-40, A-C Voltmeter	7.2 kV bus 1DB, volts	MCB panel XCP6117
GE Type 180, A-C Ammeter	Diesel generator B, amperes	MCB panel XCP6117
GE Type 180, A-C Ammeter	7.2 kV bus 1DB feeder, amperes	MCB panel XCP6117
GE Type AB-40, A-C Ammeter	7.2 kV bus tie 1DX/2DX, amperes	MCB panel XCP6117
GE Type AB-40, A-C Voltmeter	115 kV incoming, volts	MCB panel XCP6117

RN 99-002

TABLE 8.3-4

IDENTIFICATION OF SAFETY-RELATED
CABLE TRAYS AND CABLES

Color	Reactor Protection Channel	Process Control Channel	Engineered Safety Features Actuation & Equipment Channel
Red	I	1	A, J
Orange	II	2	D, L
Blue	III	3	B, K
Yellow	IV	4	E, M
Green	-	-	C
Tan, plus Channel Color	Associated	-	X, plus channel
Tan or no color	Non-Safety-Related	-	X

99-01

TABLE 8.3-5

SEQUENCE OF OPERATION FOLLOWING A LOSS OR DEGRADED VOLTAGE CONDITION

Items of Operation	Loss of Voltage (Time in Seconds)	Degraded Voltage (Time in Seconds)
Loss or Degraded Voltage Condition	0	0
Diesel Generator Start	0.25	3
Permissive to EFW Pump Start	0.25	3
Initiate ESFLS Operation	2.25	7
7.2Kv Bus Circuit Breaker Trip	2.25	7
Permissive to Close Diesel Generator Circuit Breaker	5.25	10
Diesel Generator Ready to Load (Initiate Block Loading)	10.25	13

*****DGNSPEC*****
USERNAME *****SYTIME******

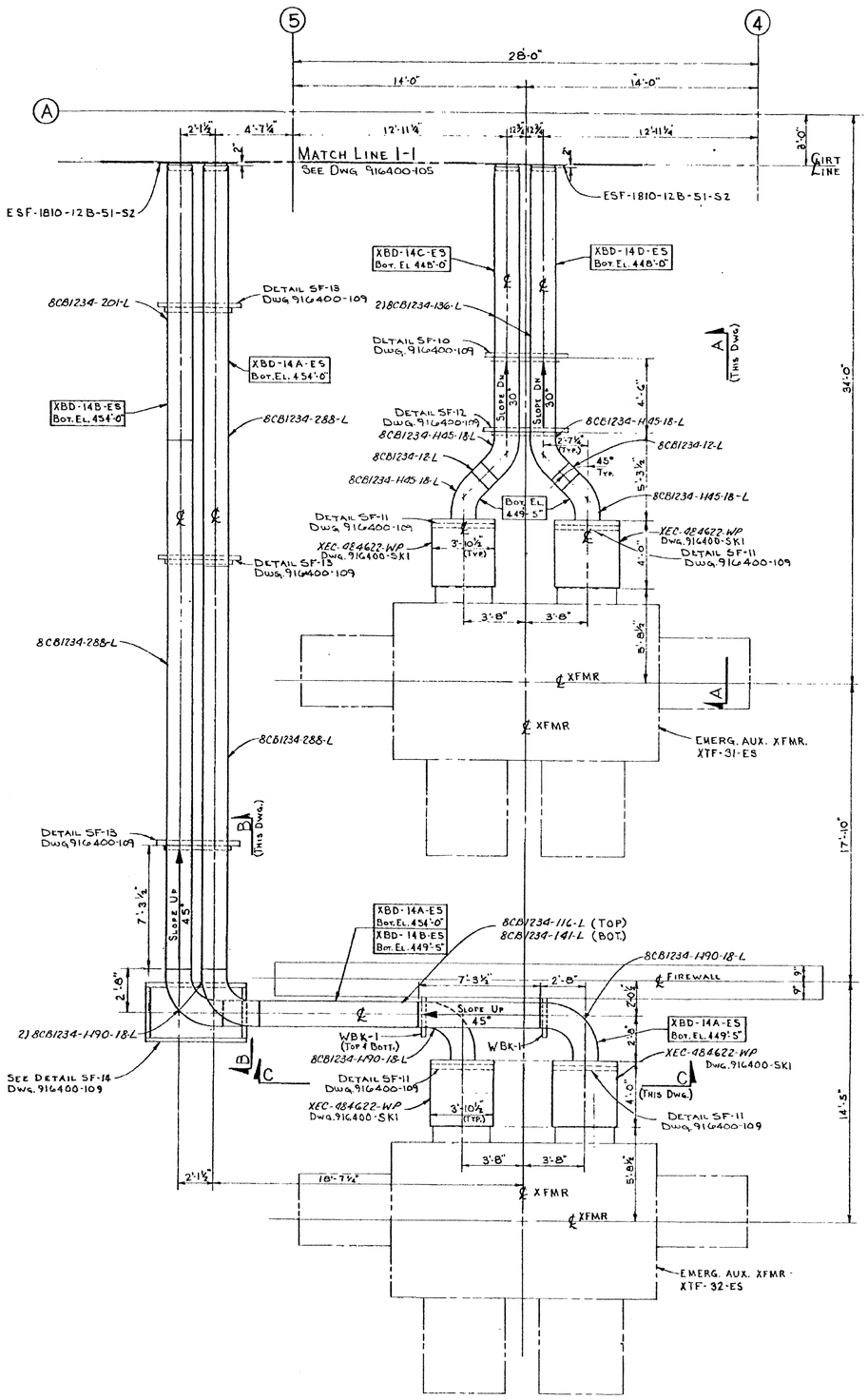

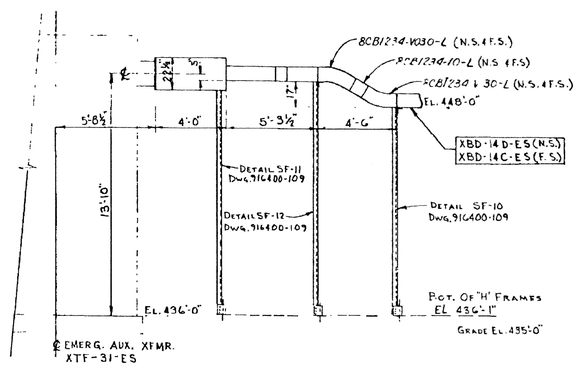

SECTION "A-A"

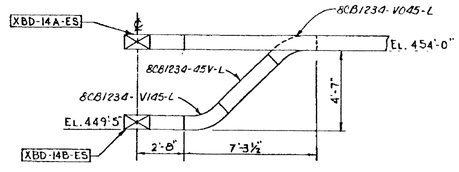

SECTION "B-B"

SEE DWG. 916400-108 FOR ANCHOR BOLT PLAN

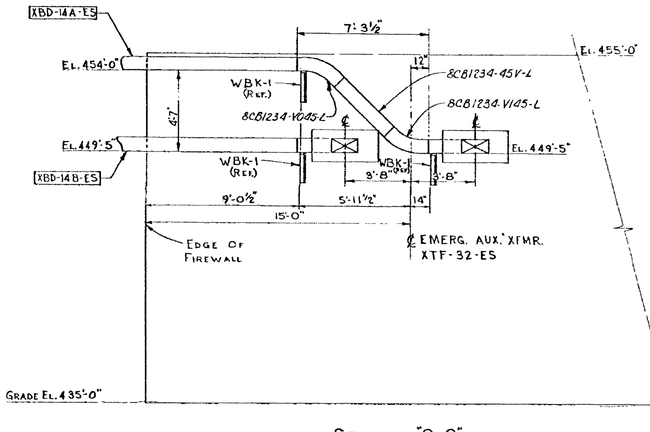

SECTION "C-C"

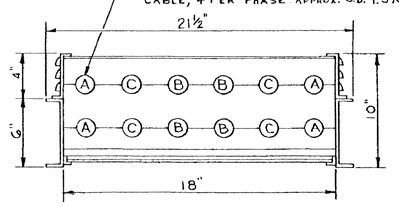

2000A 8KV 3Ø-3W SYSTEM
CATALOG NO. 8CB1234-( )-L

OUTDOOR CABL-BUS CROSS SECTION
APPROX. WT. PER FT. 44 LBS.

SOUTH CAROLINA ELECTRIC & GAS CO.
VIRGIL C. SUMMER NUCLEAR STATION UNIT No. 1

☒ APPROVED	CHECKING IS ONLY FOR GENERAL DESIGN AND GENERAL DIMENSIONS SET FORTH IN CONTRACT DOCUMENTS AND DOES NOT RELIEVE CONTRACTOR FROM HIS OBLIGATON AS TO DETAIL WORKMANSHIP AND GUARANTEES.
☐ APPROVED AS NOTED	
☐ RETURNED FOR CORRECTION	

GILBERT ASSOCIATES, INC.
BY R.T. STRAUSSER
B/M ITEM No. ED-1 DATE 6/19/77

FSAR Figure 8.3-0

OUTDOOR CABLE BUS LAYOUT & SECTIONS
EMERGENCY AUXILIARY TRANSFORMER AREA
VENDOR/DRAWING NO.: HUSKY PRODUCTS INC. 916400-100

DESIGN ENGINEERING
A BOWE COMPANY — V. C. SUMMER NUCLEAR STATION JENKINSVILLE, S. C.

MADE	CHECKED	LE APPROVAL
1. DDJ	2. MGR	3. DDJ

SCALE: NO SCALE
DRAWING NUMBER: 1MS-33-007
SHT. NUMBER: 3
REV: 3

NO.	DATE	BY	REVISION	CKD. BY	LE APPROVAL
3	10/09/01	DDJ	REVISED PER ECR-70028	MGR	DDJ

Amendment 02-01
May 2002

1/4"=1'-0" 0' 5' 10' 15' 20'

...\ondack\26041\v033_0007_0001.dgn Oct. 17, 2001 14:19:21

$$$$$DGNSPEC$$$$$$$$$$$$$$$$$$$$$$$$$$$$$$$$
$$USERNAME$$ $$$$$$SYTIME$$$$$$

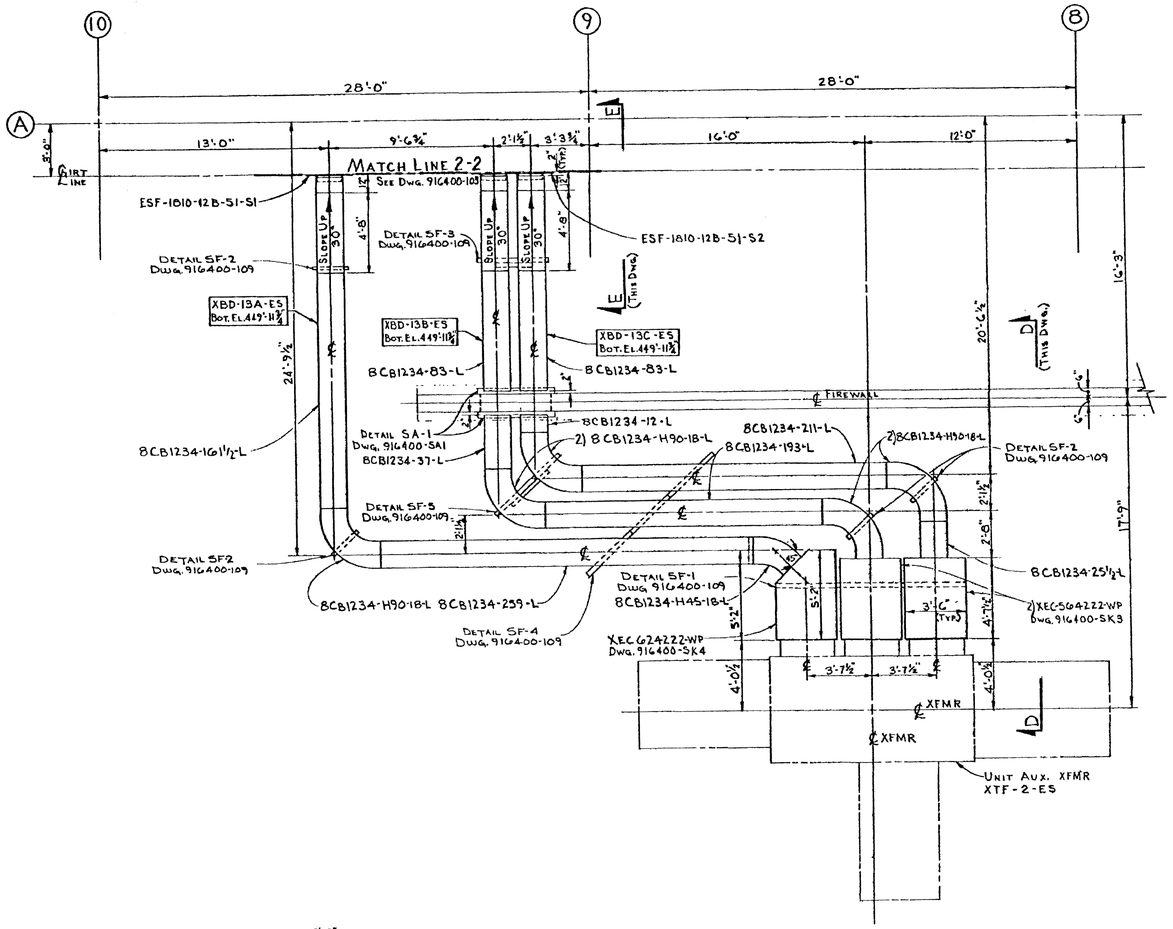

NORTH

SEE DWG. 916400-108 FOR ANCHOR BOLT PLAN

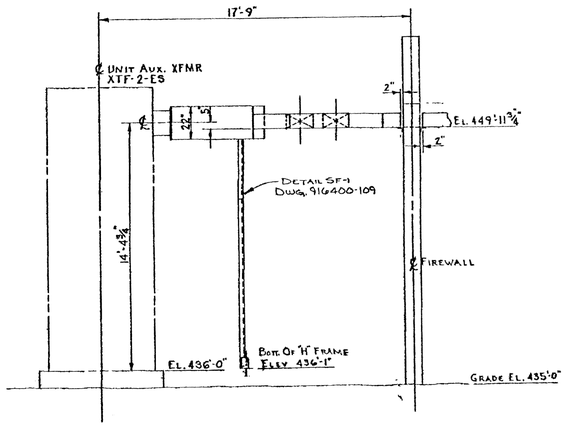

SECTION "D-D"

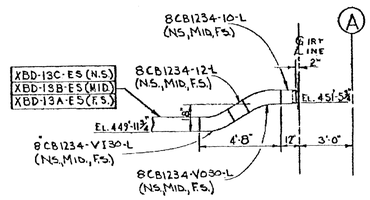

SECTION "E-E"

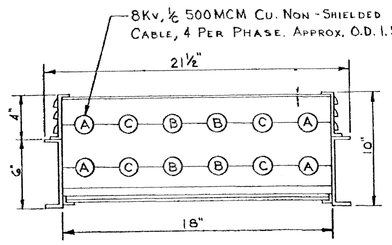

2000A 8KV 3Ø-3W SYSTEM
CATALOG NO 8CB1234-( )-L

OUTDOOR CABL-BUS CROSS SECTION

APPROX. WT. PER FT. 44 LBS.

SOUTH CAROLINA ELECTRIC & GAS CO.
VIRGIL C. SUMMER NUCLEAR STATION UNIT No. 1

☒ APPROVED
☐ APPROVED AS NOTED
☐ RETURNED FOR CORRECTION

CHECKING IS ONLY FOR GENERAL DESIGN AND GENERAL DIMENSIONS SET FORTH IN CONTRACT DOCUMENTS AND DOES NOT RELIEVE CONTRACTOR FROM HIS OBLIGATON AS TO DETAIL WORKMANSHIP AND GUARANTEES.

GILBERT ASSOCIATES, INC.
BY R.T. STRAUSSER
B/M ITEM No. ED-1 DATE 8/19/77

FSAR Figure 8.3-0a

OUTDOOR CABLE BUS LAYOUT & SECTIONS
UNIT AUXILIARY TRANSFORMER AREA

VENDOR/DRAWING No.: HUSKY PRODUCTS INC. 916400-101

A SCANA COMPANY — DESIGN ENGINEERING — V. C. SUMMER NUCLEAR STATION JENKINSVILLE, S. C.

MADE	CHECKED	LE APPROVAL
1. DDJ	2. MGR	3. DDJ

SCALE NO SCALE — 1MS-33-008 — SHT. NUMBER 3 — REV

NO.	DATE	BY	REVISION	CKD. BY	LE APPROVAL
3	10/10/01	DDJ	REVISED PER ECR-70028	MGR	DDJ

Amendment 02-01
May 2002

1/4"=1'-0" 0' 5' 10' 15' 20'

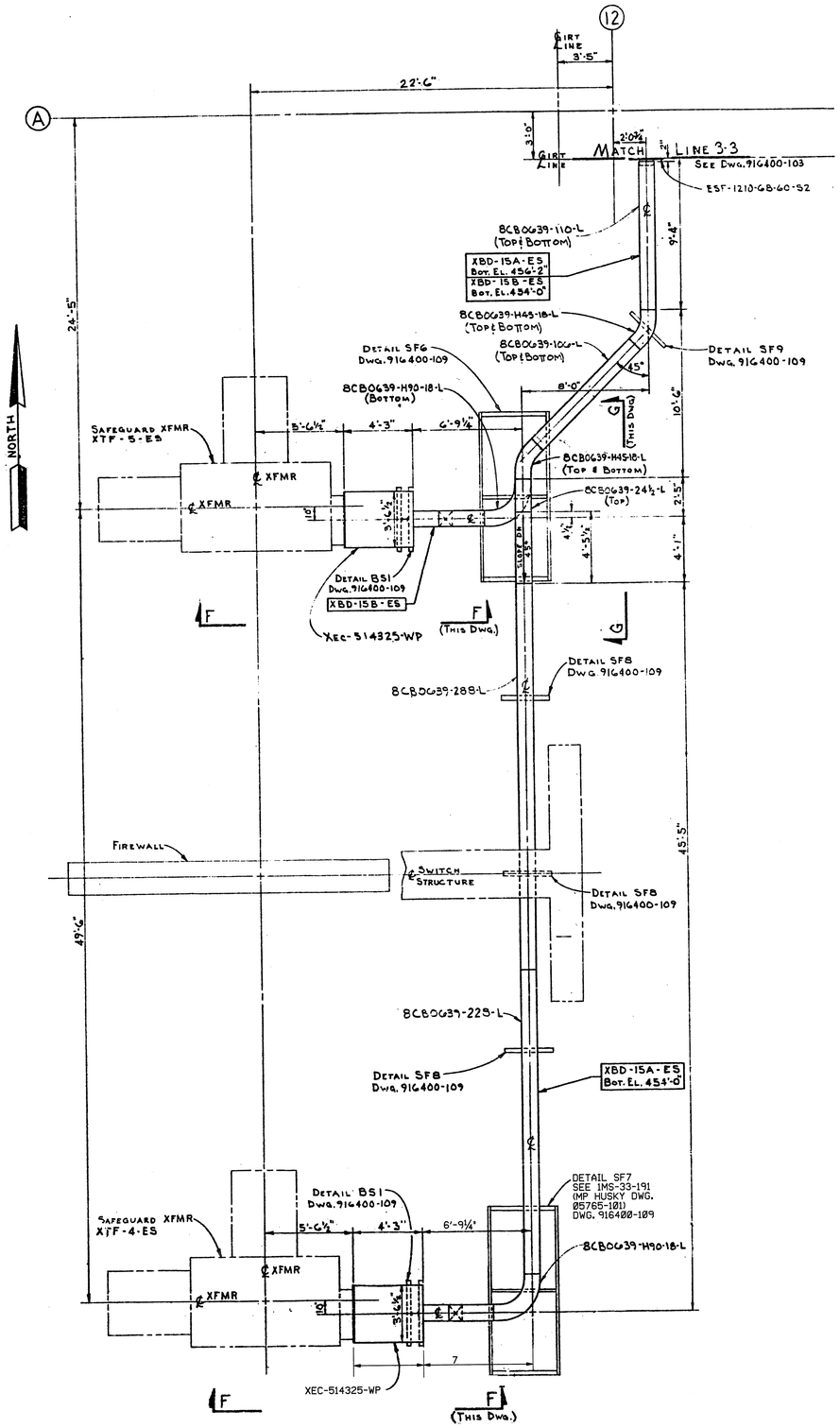

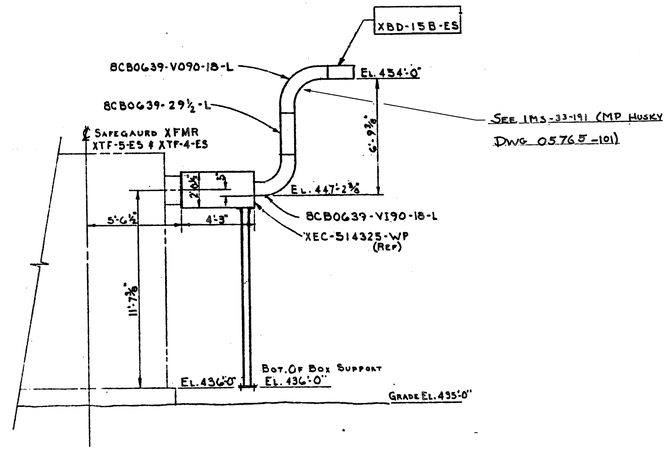

SECTION "F-F"

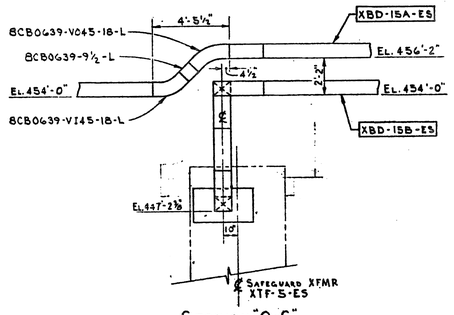

SECTION "G-G"

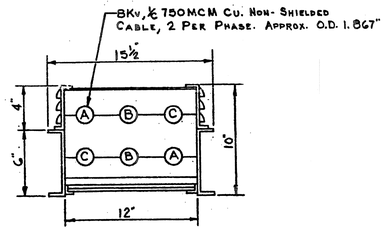

1200A 8Kv 3Ø-3W System
Catalog No 8CB0639-( )-L

OUTDOOR CABL-BUS CROSS SECTION
APPROX. WT. PER FT. 30 LBS

SEE DWG 916400-108 FOR ANCHOR BOLT PLAN

SOUTH CAROLINA ELECTRIC & GAS CO.
Virgil C. Summer Nuclear Station Unit No. 1

- [X] APPROVED
- [ ] APPROVED AS NOTED
- [ ] RETURNED FOR CORRECTION

CHECKING IS ONLY FOR GENERAL DESIGN AND GENERAL DIMENSIONS SET FORTH IN CONTRACT DOCUMENTS AND DOES NOT RELIEVE CONTRACTOR FROM HIS OBLIGATION AS TO DETAIL WORKMANSHIP AND GUARANTEES.

BY GILBERT ASSOCIATES, INC.

SCE&G ITEM No. ED-1 DATE 5-19-77

AMENDMENT 00-01
DECEMBER 2000

DRAWING LEGIBILITY
CLASS 2
SCE&G CAD ENHANCED

NO.	DATE	BY	REVISION	CKD. BY	LE APPROVAL
4	10/18/99	JMR	REVISED PER CGSS-99-0518	MGR	DKW

FSAR Figure 8.3-0b

OUTDOOR CABLE BUS LAYOUT & SECTIONS
SAFEGUARD TRANSFORMER AREA
VENDOR/DRAWING NO.: HUSKY PRODUCTS INC. 916400-102

SCE&G A SCANA COMPANY — DESIGN ENGINEERING
V. C. SUMMER NUCLEAR STATION JENKINSVILLE, S. C.

1. MADE	2. CHECKED	3. LE APPROVAL
JMR	MGR	DKW

SCALE NO SCALE | 1MS-33-009 (DRAWING NUMBER) | SHT. NUMBER | 4 REV

$$$$$DGNSPEC$$$$$

*****DGNSPEC*****
USERNAME ******SYTIME******

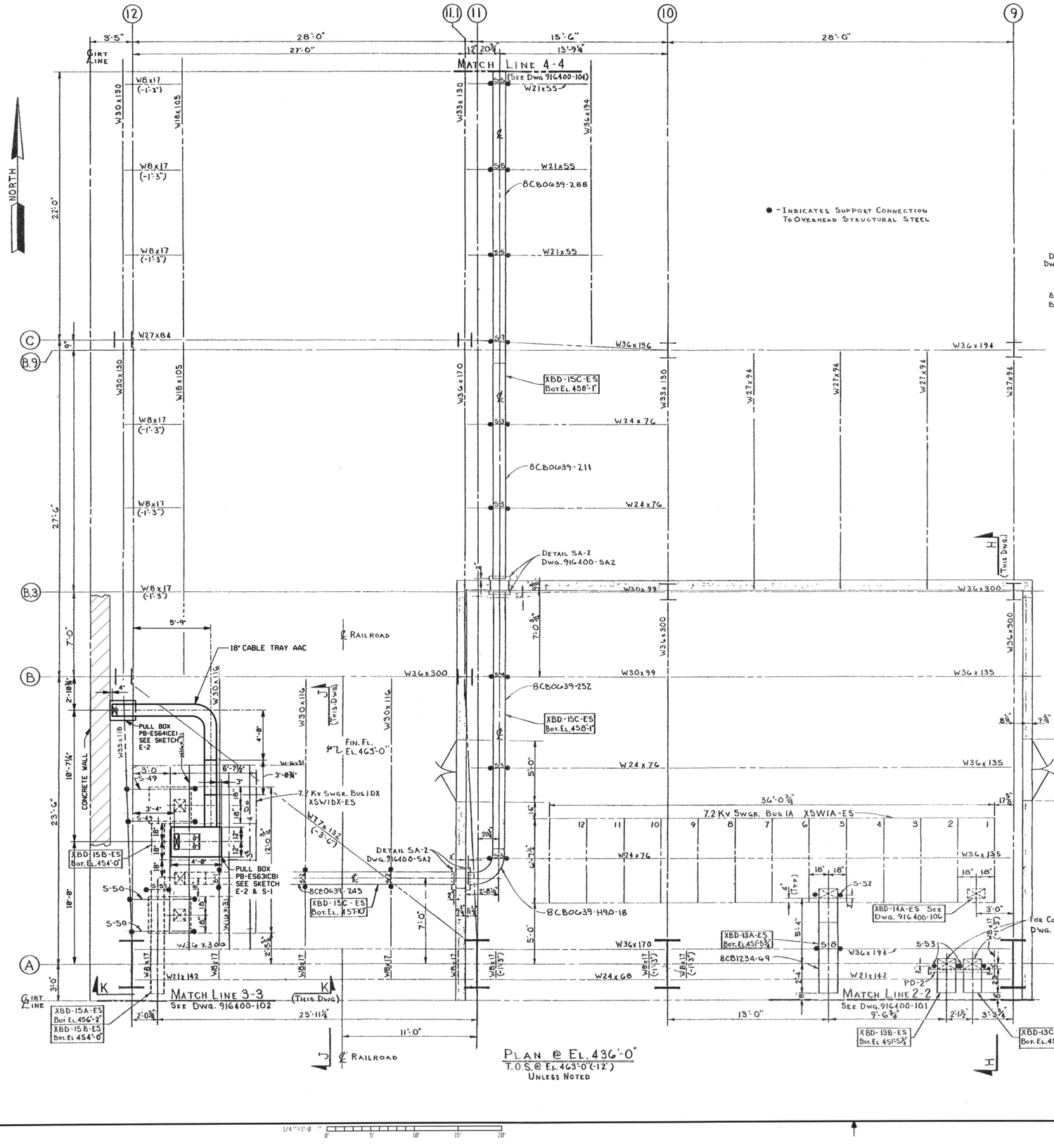

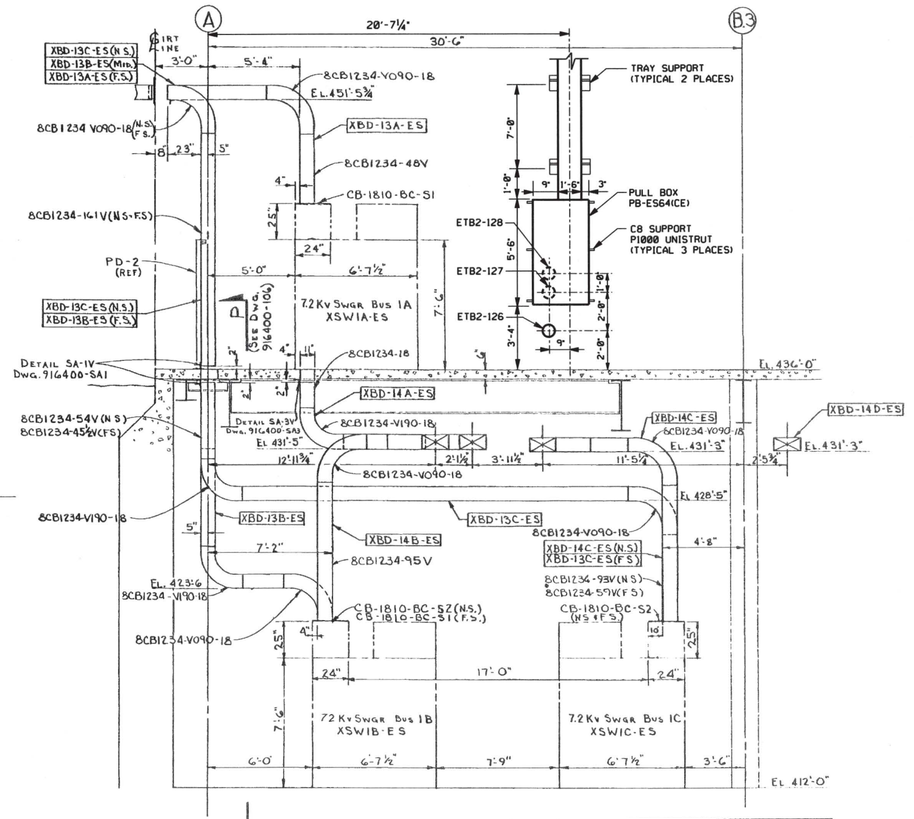

SECTION "H-H"

NOTE:
SEE DWG 916400-104 FOR CABL-BUS CROSS SECTIONS

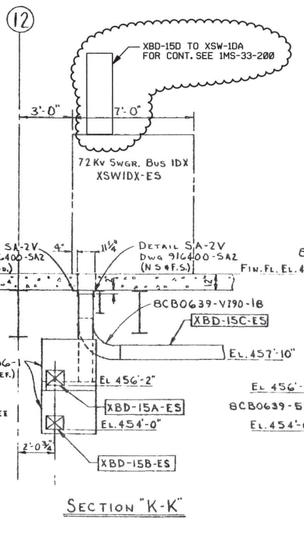

SECTION "K-K"

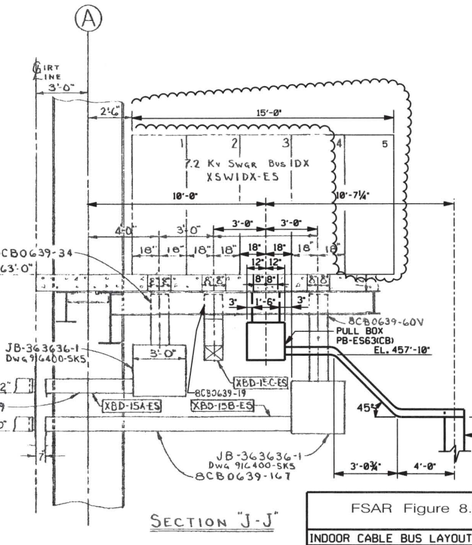

SECTION "J-J"

RN 12-007

SOUTH CAROLINA ELECTRIC & GAS CO.
VIRGIL C. SUMMER NUCLEAR STATION UNIT No. 1

☒ APPROVED
☐ APPROVED AS NOTED
☐ RETURNED FOR CORRECTION

CHECKING IS ONLY FOR GENERAL DESIGN AND GENERAL DIMENSIONS SET FORTH IN CONTRACT DOCUMENTS AND DOES NOT RELIEVE CONTRACTOR FROM HIS OBLIGATION AS TO DETAIL WORKMANSHIP AND GUARANTEES.

GILBERT ASSOCIATES, INC.
BY R.T. STRAUSSER
B/M ITEM No. ED-1 DATE 5/19/77

NO.	DATE	BY	REVISION	CKD. BY	APPROVAL
5	5/1/14	JMR	REVISED PER ECR-50800	MGR	EM
4	4/4/07	TGB	REVISED PER ECR-50555	MGR	JMW
3	10/10/01	DDJ	REVISED PER ECR-70028	MGR	DDJ

FSAR Figure 8.3-0c

INDOOR CABLE BUS LAYOUT & SECTIONS
PLAN VIEW, ELEVATION 436'-0".
COL. A TO COL. D
VENDOR/DRAWING NO.: HUSKY PRODUCTS INC. 916400-103

DESIGN ENGINEERING
A SCANA COMPANY
V. C. SUMMER NUCLEAR STATION JENKINSVILLE, S. C.

MADE	CHECKED	LE APPROVAL
1. DDJ	2. MGR	3. DDJ

SCALE: NO SCALE
IMS-33-028 — DRAWING NUMBER
SHT. NUMBER 5 — REV

*****DGNSPEC*****
USERNAME *****SYTIME******

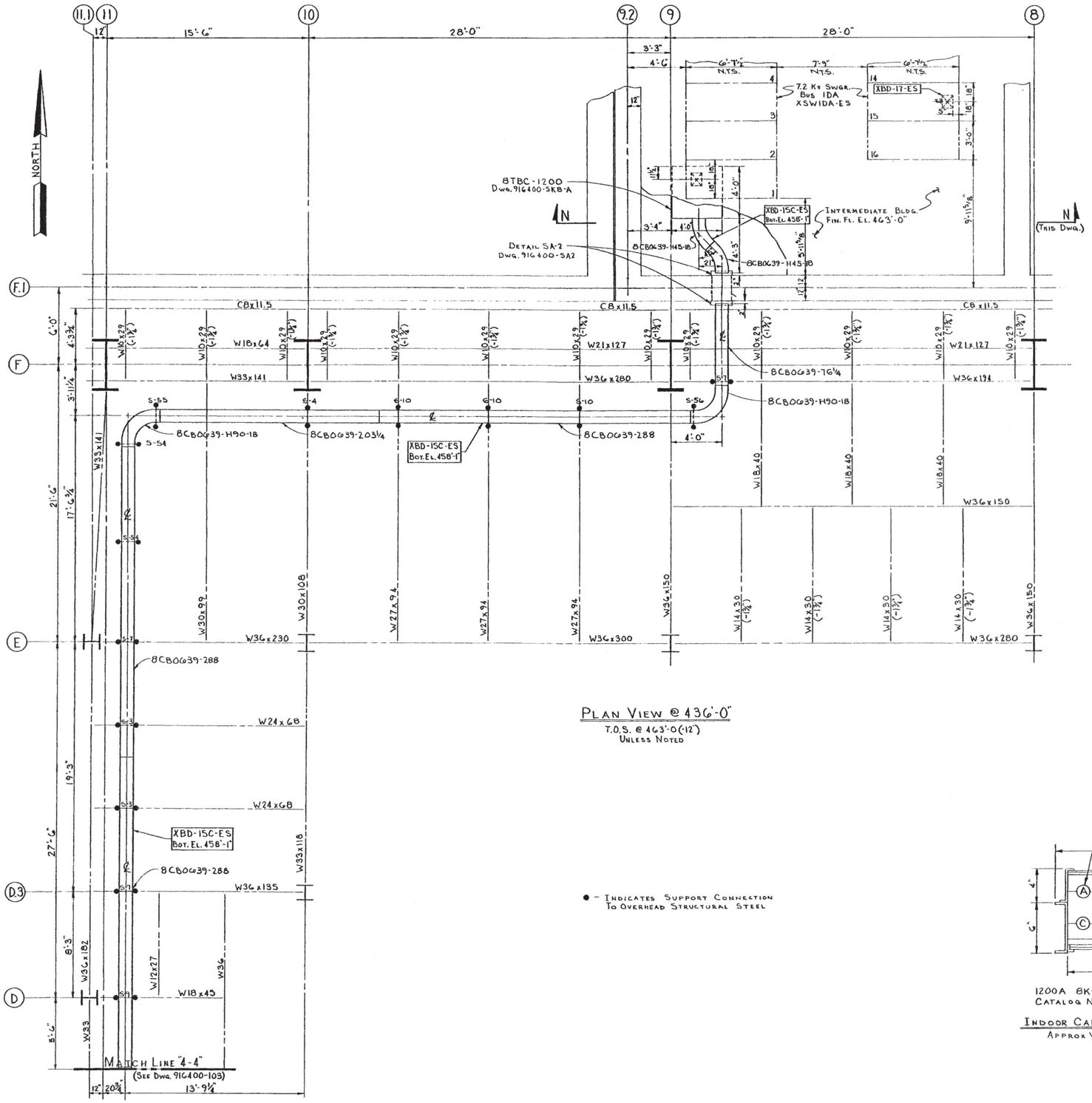

PLAN VIEW @ 436'-0"
T.O.S. @ 463'-0"(-12") UNLESS NOTED

● - INDICATES SUPPORT CONNECTION TO OVERHEAD STRUCTURAL STEEL

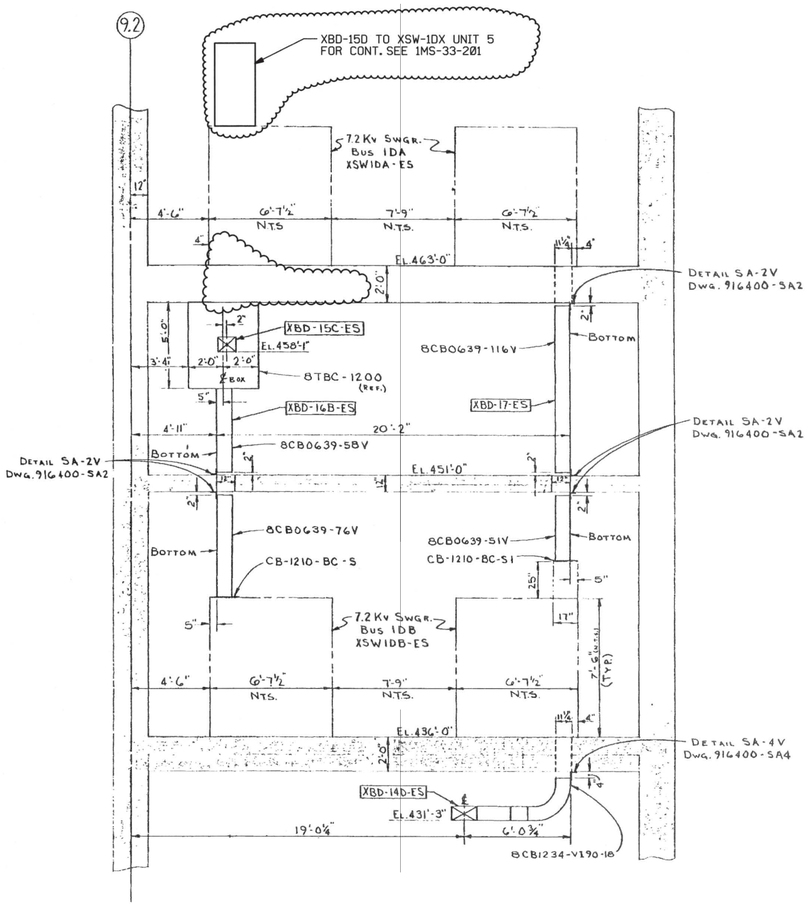

SECTION "N-N"

SOUTH CAROLINA ELECTRIC & GAS CO.
VIRGIL C. SUMMER NUCLEAR STATION UNIT No. 1

[X]	APPROVED	CHECKING IS ONLY FOR GENERAL DESIGN AND GENERAL DIMENSIONS SET FORTH IN CONTRACT DOCUMENTS AND DOES NOT RELIEVE CONTRACTOR FROM HIS OBLIGATION AS TO DETAIL WORKMANSHIP AND GUARANTEES.
[ ]	APPROVED AS NOTED	
[ ]	RETURNED FOR CORRECTION	

GILBERT ASSOCIATES, INC.
BY R.T. STRAUSSER
B/M ITEM No. ED-1 DATE 5/19/77

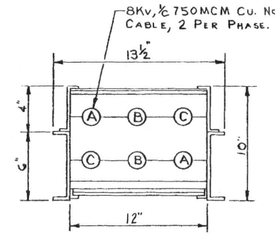

1200A 8Kv 3Ø-3W SYSTEM
CATALOG No. 8CB06 39-

INDOOR CABL-BUS CROSS SECTION
APPROX WT. PER FT. 30 LBS.

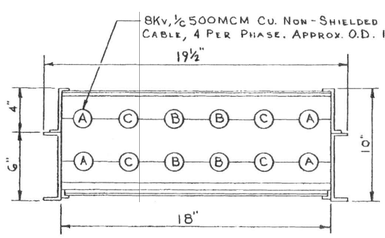

2000A 8Kv 3Ø-3W SYSTEM
CATALOG No. 8CB1234-

INDOOR CABL-BUS CROSS SECTION
APPROX. WT. PER FT. 44 LBS.

RN 12-007

NO.	DATE	BY	REVISION	CKD. BY	LE APPROVAL
4	5/14/14	JMR	REVISED PER ECR-50800	MGR	EM
3	10/18/11	DDJ	REVISED PER ECR-70028	MGR	DDJ

FSAR Figure 8.3-0d

INDOOR CABLE BUS LAYOUT & SECTIONS
PLAN VIEW, ELEVATION 436'-0",
COL. D-F.1 & 8-11.1

VENDOR/DRAWING NO. HUSKY PRODUCTS INC. 916400-104

DESIGN ENGINEERING
V. C. SUMMER NUCLEAR STATION JENKINSVILLE, S. C.

1. MADE	2. CHECKED	3. LE APPROVAL
DDJ	MGR	DDJ

SCALE NO SCALE
1MS-33-029 DRAWING NUMBER
SHT. NUMBER 4 REV

1/4"=1'-0" 0' 5' 10' 15' 20'

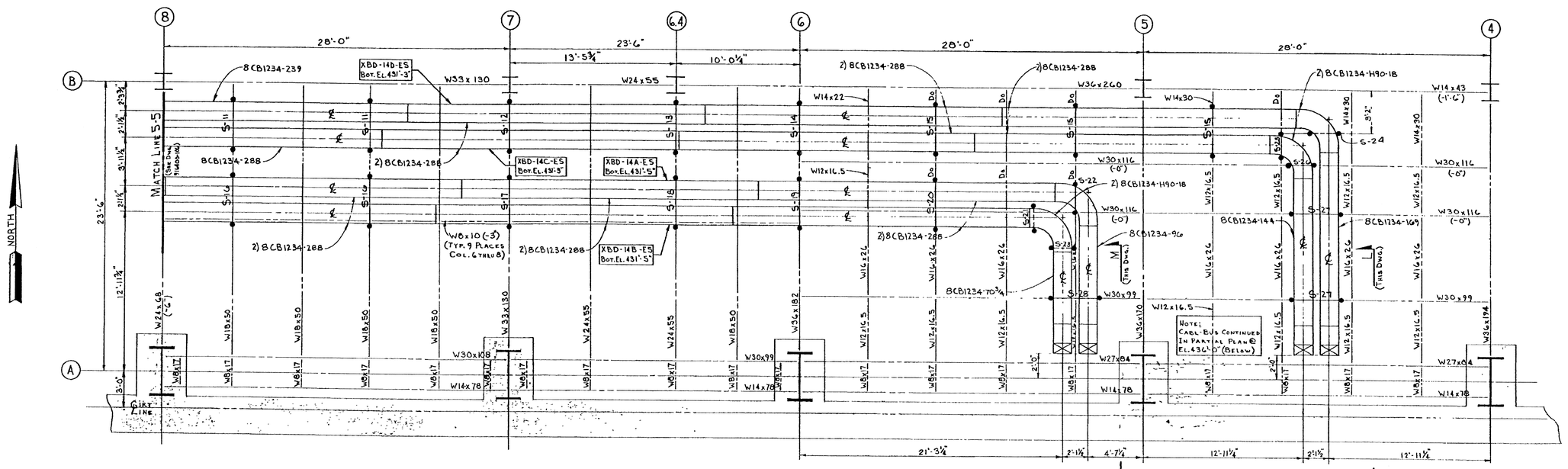

PLAN @ EL. 412'-0"

T.O.S. @ 436'-0" (-13¾") UNLESS NOTED

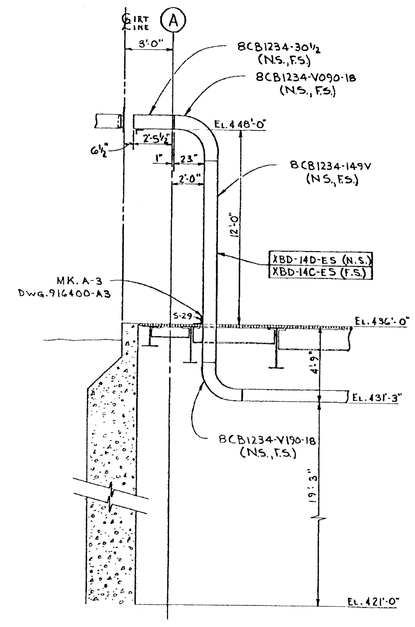

SECTION "L-L"

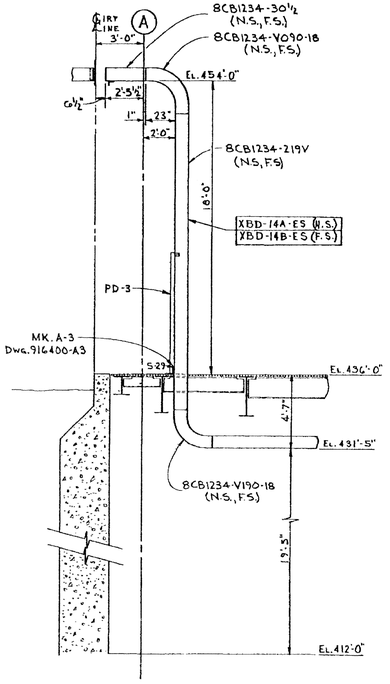

SECTION "M-M"

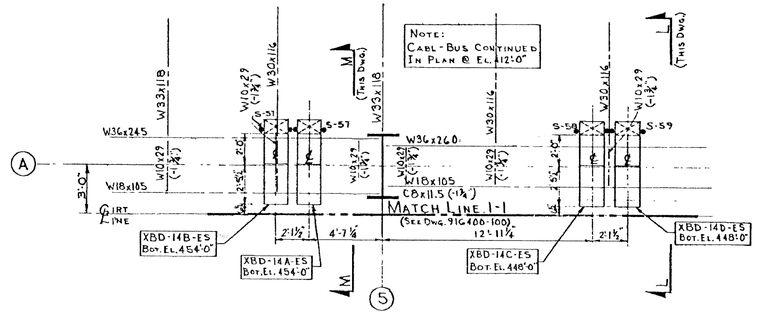

PARTIAL PLAN @ EL. 436'-0"

T.O.S. @ 463'-0" (-12") UNLESS NOTED

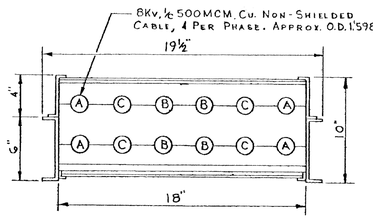

2000A 8Kv 3Ø-3W SYSTEM
CATALOG No. 8CB1234-

INDOOR CABL-BUS CROSS SECTION

APPROX. WT. PER FT. 44 LBS.

● - INDICATES SUPPORT CONNECTION TO OVERHEAD STRUCTURAL STEEL

SOUTH CAROLINA ELECTRIC & GAS CO.
VIRGIL C. SUMMER NUCLEAR STATION UNIT No. 1

☒	APPROVED	CHECKING IS ONLY FOR GENERAL DESIGN AND GENERAL DIMENSIONS SET FORTH IN CONTRACT DOCUMENTS AND DOES NOT RELIEVE CONTRACTOR FROM HIS OBLIGATION AS TO DETAIL WORKMANSHIP AND GUARANTEES.
☐	APPROVED AS NOTED	
☐	RETURNED FOR CORRECTION	

GILBERT ASSOCIATES, INC.
BY R.T. STRAUSSER
B/M ITEM No. ED-1 DATE 8/19/77

FSAR Figure 8.3-0e

INDOOR CABLE BUS LAYOUT & SECTIONS
PLAN VIEW, ELEVATION 412'-0",
COL. 4 THROUGH 8 & COL. A TO B

VENDOR/DRAWING NO.: HUSKY PRODUCTS INC. 916400-105

Amendment 02-01
May 2002

NO.	DATE	BY	REVISION	CKD. BY	LE APPROVAL
3	10/11/01	DDJ	REVISED PER ECR-70028	MGR	DDJ

SCALE: 1/4"=1'-0" (0' 5' 10' 15' 20')

DESIGN ENGINEERING
A SCANA COMPANY V. C. SUMMER NUCLEAR STATION JENKINSVILLE, S. C.

MADE	CHECKED	LE APPROVAL
DDJ	MGR	DDJ

SCALE: NO SCALE
DRAWING NUMBER: 1MS-33-030
SHT. NUMBER: 3
REV.

#####DGNSPEC#####################################
##USERNAME## #####SYTIME######

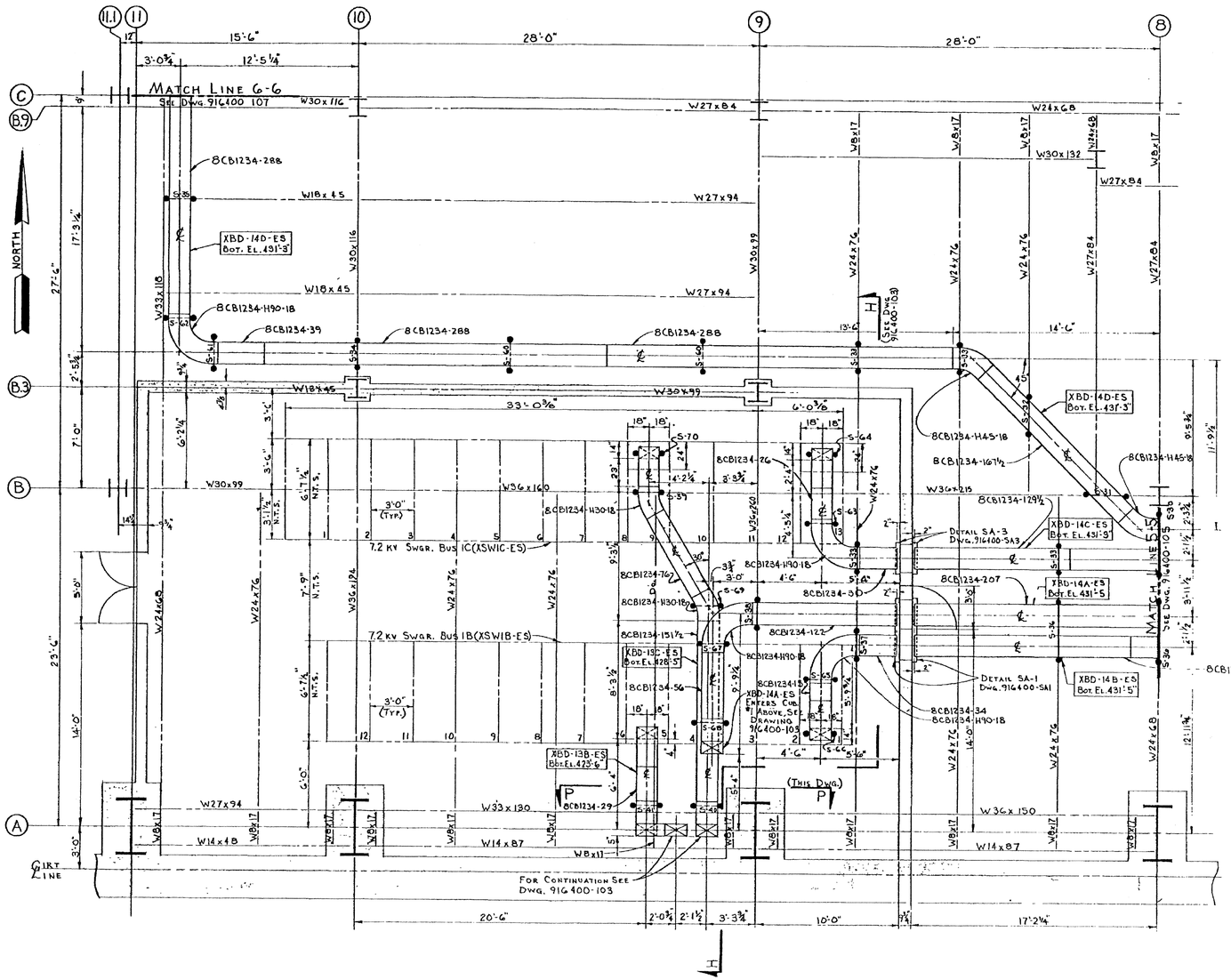

PLAN @ EL. 412'-0"
T.O.S. @ EL. 436'-0" (-6")

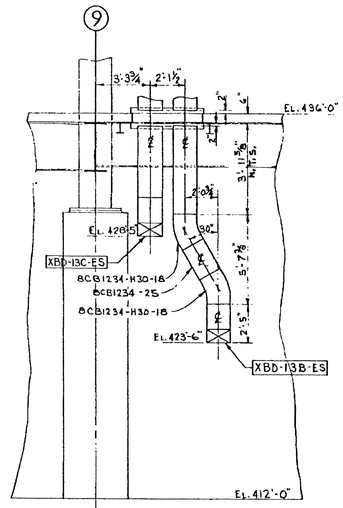

SECTION "P-P"

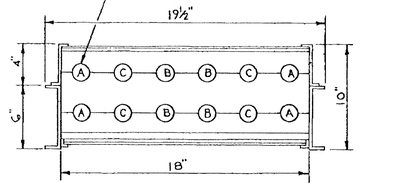

2000A 8Kv 3Ø-3W SYSTEM
CATALOG No. 8CB1234-

INDOOR CABL-BUS CROSS SECTION
APPROX. WT. PER FT. 44 LBS.

● - INDICATES SUPPORT CONNECTION TO OVERHEAD STRUCTURAL STEEL

SOUTH CAROLINA ELECTRIC & GAS CO.
VIRGIL C. SUMMER NUCLEAR STATION UNIT No. 1

☒ APPROVED — CHECKING IS ONLY FOR GENERAL DESIGN AND GENERAL DIMENSIONS SET FORTH IN CONTRACT DOCUMENTS AND DOES NOT RELIEVE CONTRACTOR FROM HIS OBLIGATION AS TO DETAIL WORKMANSHIP AND GUARANTEES.

☐ APPROVED AS NOTED

☐ RETURNED FOR CORRECTION

GILBERT ASSOCIATES, INC.
BY R.T. STRAUSSER
B/M ITEM No. ED-1 DATE 5/19/77

FSAR Figure 8.3-0f

INDOOR CABLE BUS LAYOUT & SECTIONS
PLAN VIEW, ELEVATION 412'-0",
COL. 8 TO 11.1 & COL. A TO C

VENDOR DRAWING NO.: HUSKY PRODUCTS INC. 916400-106

GILBERT A GCAM COMPANY — DESIGN ENGINEERING
V.C. SUMMER NUCLEAR STATION JENKINSVILLE, S.C.

MADE	CHECKED	LE APPROVAL
1. DDJ	2. MGR	3. DDJ

SCALE: NO SCALE
DRAWING NUMBER: 1MS-33-033
SHT. NUMBER: 3
REV: 3

NO.	DATE	BY	REVISION	CKD. BY	LE APPROVAL
3	10/11/01	DDJ	REVISED PER ECR-70028	MGR	DDJ

Amendment 02-01
May 2002

1/4"=1'-0" (0' 5' 10' 15' 20')

\Vndck\DEDA\V033_0033_0001.dgn Oct. 17, 2001 14:40:24

$$$$$DGNSPEC$$$$$$$$$$$$$$$$$$$$$$$$$$$$$$$$
$$USERNAME$$ $$$$$SYTIME$$$$$$

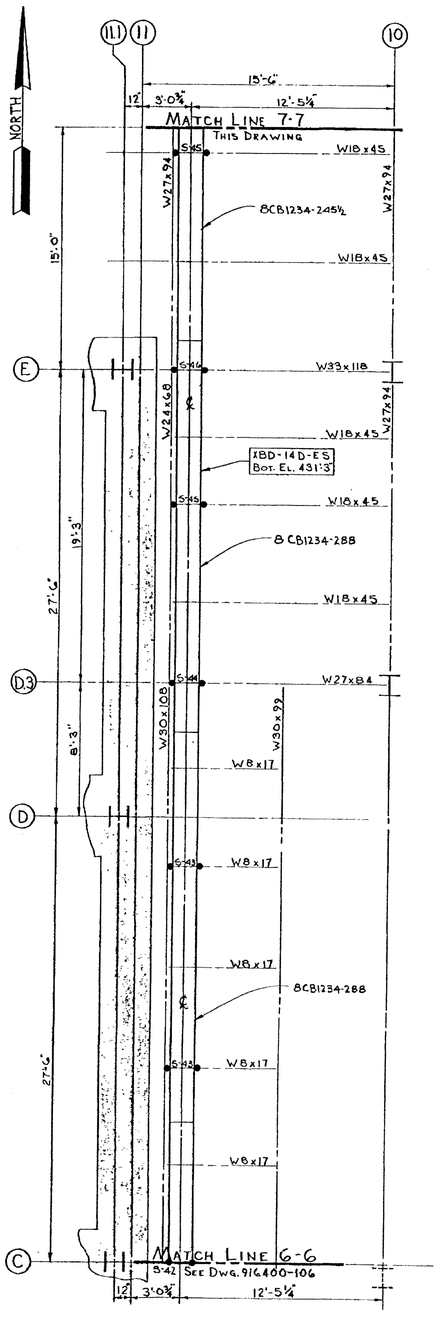

PLAN VIEW @ EL. 412'-0"
T.O.S. @ 436'-0" (-6")

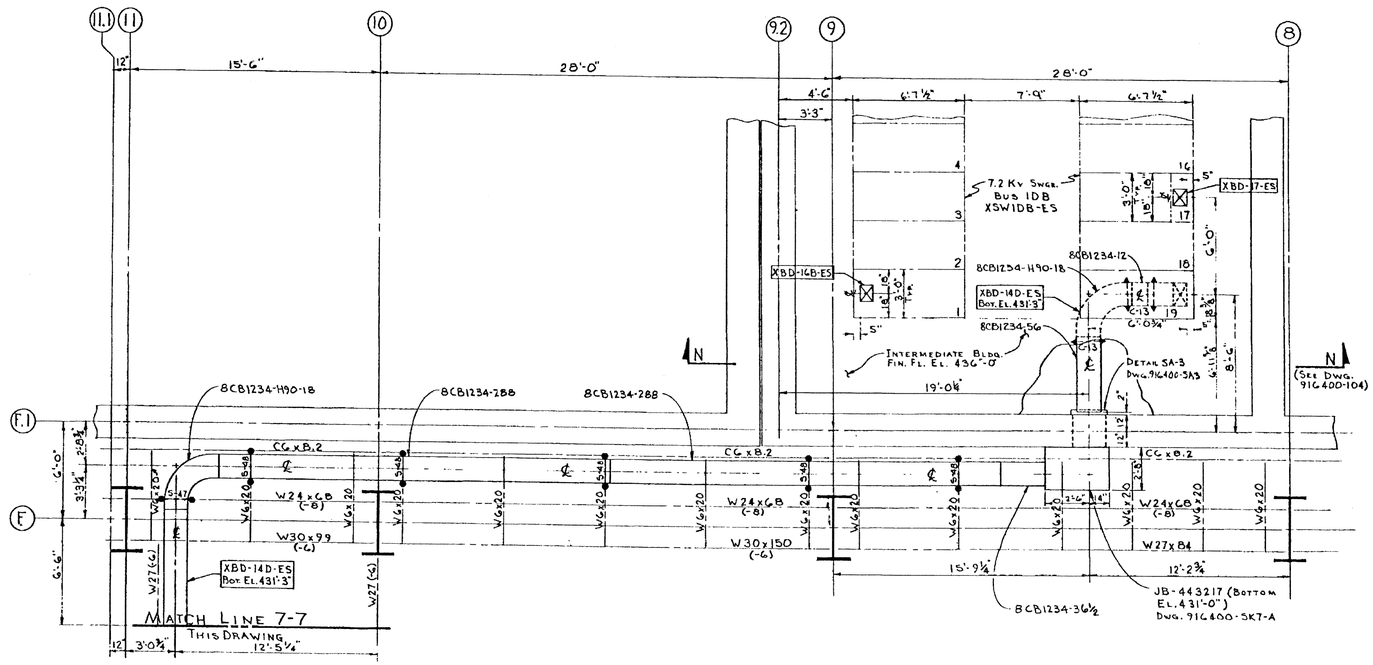

PLAN VIEW @ EL. 412'-0"
T.O.S. @ 436'-0" (-1⅜")
UNLESS NOTED

SOUTH CAROLINA ELECTRIC & GAS CO.
VIRGIL C. SUMMER NUCLEAR STATION UNIT No. 1

☒	APPROVED	CHECKING IS ONLY FOR GENERAL DESIGN AND GENERAL DIMENSIONS SET FORTH IN CONTRACT DOCUMENTS AND DOES NOT RELIEVE CONTRACTOR FROM HIS OBLIGATION AS TO DETAIL WORKMANSHIP AND GUARANTEES.
☐	APPROVED AS NOTED	
☐	RETURNED FOR CORRECTION	

GILBERT ASSOCIATES, INC.
BY R.T. STRAUSSER
B/M ITEM No. ED-1 DATE 8/19/77

● - INDICATES SUPPORT CONNECTION TO OVERHEAD STRUCTURAL STEEL.
▲ - INDICATES CONCRETE INSERT (BY OWNER)

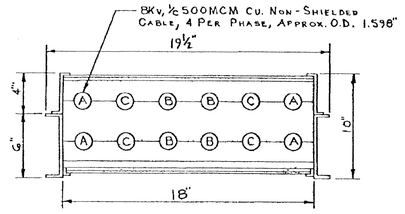

2000A 8Kv 3Ø-3W System
Catalog No. 8CB1234-

INDOOR CABL-BUS CROSS SECTION
Approx Wt. Per Ft. 44 LBS

FSAR Figure 8.3-0g

INDOOR CABLE BUS LAYOUT & SECTIONS
PLAN VIEW, ELEVATION 412'-0",
COL. 8 TO 11.1 & COL. C-F.1
VENDOR/DRAWING NO.: HUSKY PRODUCTS INC. 916400-107

Amendment 02-01
May 2002

NO.	DATE	BY	REVISION	CKD. BY	LE APPROVAL
3	10/1/81	DDJ	REVISED PER ECR-7002B	MGR	DDJ

DESIGN ENGINEERING
A BOWA COMPANY — V. C. SUMMER NUCLEAR STATION JENKINSVILLE, S. C.

MADE	CHECKED	LE APPROVAL
DDJ	MGR	DDJ

SCALE: NO SCALE — DRAWING NUMBER: 1MS-33-034 — SHT. NUMBER: 3 — REV.: 3

1/4"=1'-0" (0' 5' 10' 15' 20')

\\ndeck\2504\V033_0034_0001.dgn Oct. 17, 2001 14:50:09

SHUTDOWN SIGNAL FROM C-203-006 B

MAIN CONTROL BOARD RESET PUSH-BUTTON S41 XCP-6117

LOCAL RESET PUSH-BUTTON PB11

NORMAL INCOMING BREAKER CLOSED

EMERGENCY INCOMING BREAKER CLOSED

DIESEL GENERATOR BREAKER CLOSED

SAFETY INJECTION SIGNAL K608 XPN-7010

BUS UNDER VOLTAGE FROM C-209-010 G

MAIN CONTROL BOARD EMERGENCY START PUSH-BUTTON S40 XCP-6117

LOCAL EMERGENCY START PUSH-BUTTON PB7

SHUTDOWN CONTROL POWER AVAILABLE

MAIN CONTROL BOARD TEST START PUSH-BUTTON S62 XCP-6117

LOCAL TEST START PUSH-BUTTON PB8

SHUTDOWN SIGNAL FROM C-203-006 B

LOCAL CONTROL SELECTOR SWITCH 43DG01

REMOTE | LOCAL | MAINTENANCE

GENERATOR LOCKOUT RELAY TRIPPED 88

STARTING CONTROL POWER AVAILABLE

BARRING GEAR ENGAGED

JACKET WATER PRESSURE FOR ENGINE SPEED ABOVE 375 RPM

ENGINE SPEED RELAY ABOVE 335 RPM

EMERGENCY START SIGNAL

DIESEL GENERATOR IN PARALLEL WITH SYSTEM

TEST START SIGNAL

EMERGENCY START SIGNAL TO C-203-006 C

TEST START SIGNAL TO C-203-006 D

ENGINE SPEED RELAY GREATER THAN 115 RPM

ENGINE TROUBLE SHUTDOWN FROM C-203-006 A

7 SECONDS TIME DELAY TO CLOSE

START FAILURE

OPEN STARTING SOLENOID VALVE A

OPEN STARTING SOLENOID VALVE B

NOTES:-

1. FOR LEGEND, SEE DRAWING E-203-201.

THIS IS A
NUCLEAR SAFETY RELATED
DOCUMENT. NO DEVIATION SHALL BE
INITIATED OR PERFORMED WITHOUT PRIOR
DOCUMENTATION AND WRITTEN APPROVAL

FSAR Figure 8.3-0h

SOUTH CAROLINA ELECTRIC & GAS COMPANY

VIRGIL C. SUMMER NUCLEAR STATION

ELECTRICAL

DIESEL GENERATOR STARTING

CONTROL LOGIC DIAGRAM

SCE&G A SCANA COMPANY

DESIGN ENGINEERING

V. C. SUMMER NUCLEAR STATION JENKINSVILLE, S. C.

MADE	CHECKED	LE APPROVAL
1. DDJ	2. MGR	3. DDJ

SCALE NO SCALE

C-203-005 DRAWING NUMBER | SHT. NUMBER 3 | REV

Amendment 02-01
May 2002

NO.	DATE	BY	REVISION	CKD. BY	LE APPROVAL
3	9/19/01	DDJ	REVISED PER ECR-70028	MGR	DDJ

1/4"-1'-0" 0' 5' 10' 15' 20'

203005_0001.m DJ14998 Thursday September 20 2001 01:06:45 PM EDT

$$$$$DGNSPEC$$$$$$$$$$$$$$$$$$$$$$$$$$$$$$$$
$$USERNAME$$ $$$$$SYTIME$$$$$$

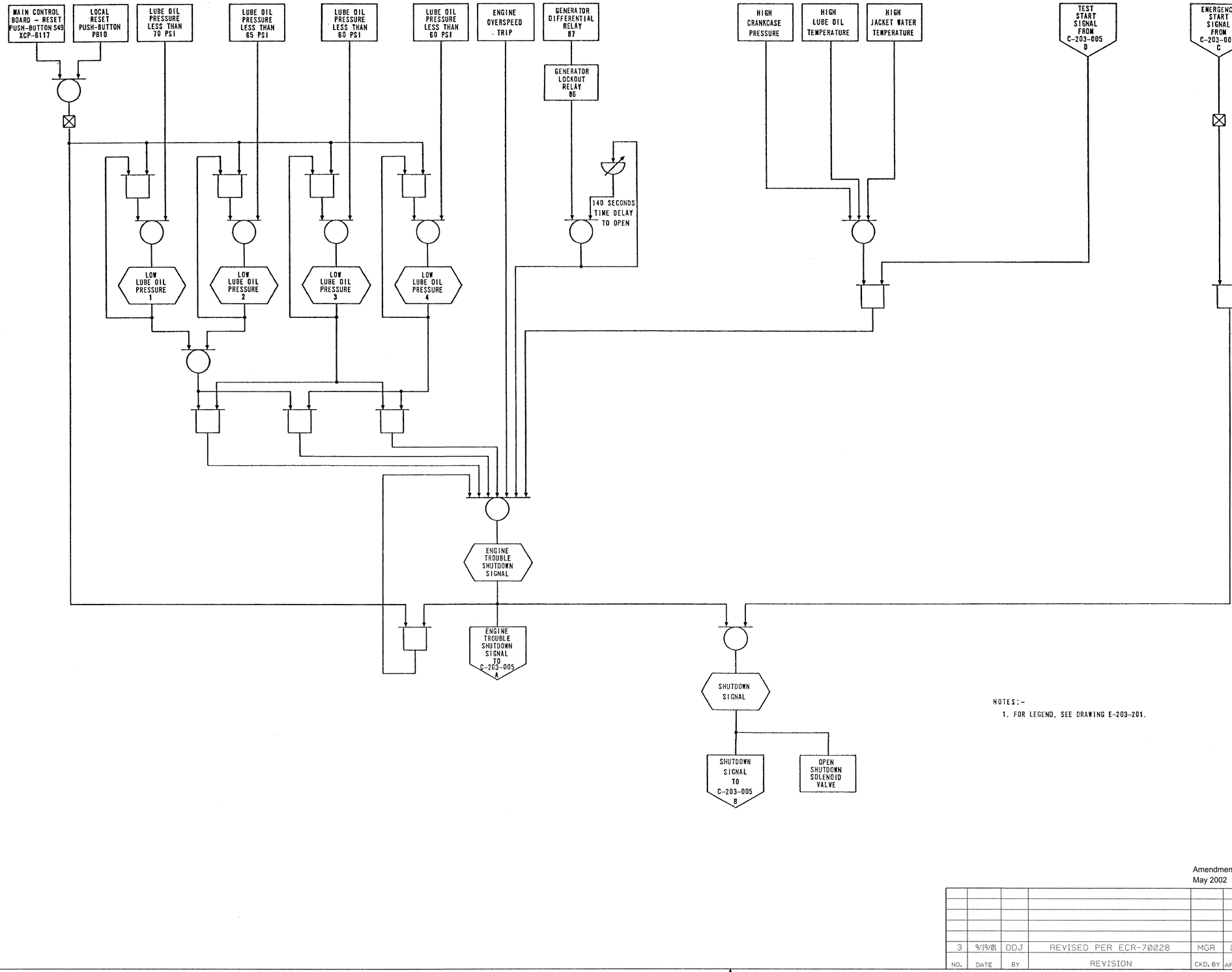

NOTES:-

1. FOR LEGEND, SEE DRAWING E-203-201.

NO.	DATE	BY	REVISION	CKD. BY	LE APPROVAL
3	9/19/01	DDJ	REVISED PER ECR-70028	MGR	DDJ

1/4"=1'-0" 0' 5' 10' 15' 20'

THIS IS A
NUCLEAR SAFETY RELATED
DOCUMENT. NO DEVIATION SHALL BE INITIATED OR PERFORMED WITHOUT PRIOR DOCUMENTATION AND WRITTEN APPROVAL

FSAR Figure 8.3-01

SOUTH CAROLINA ELECTRIC & GAS COMPANY

VIRGIL C. SUMMER NUCLEAR STATION

ELECTRICAL

DIESEL GENERATOR SHUTDOWN

CONTROL LOGIC DIAGRAM

SCE&G A SCANA COMPANY — DESIGN ENGINEERING — V. C. SUMMER NUCLEAR STATION JENKINSVILLE, S. C.

MADE	CHECKED	LE APPROVAL
1. DDJ	2. MGR	3. DDJ

SCALE NO SCALE | C-203-006 | 3
DRAWING NUMBER | SHT. NUMBER | REV

Amendment 02-01
May 2002

203006_0001.m D114998 Thursday September 20 2001 02:04:15 PM EDT

$$$$$DGNSPEC$$$$$$$$$$$$$$$$$$$$$$$$$$$$$$$$
$$USERNAME$$ $$$$$SYTIME$$$$$$

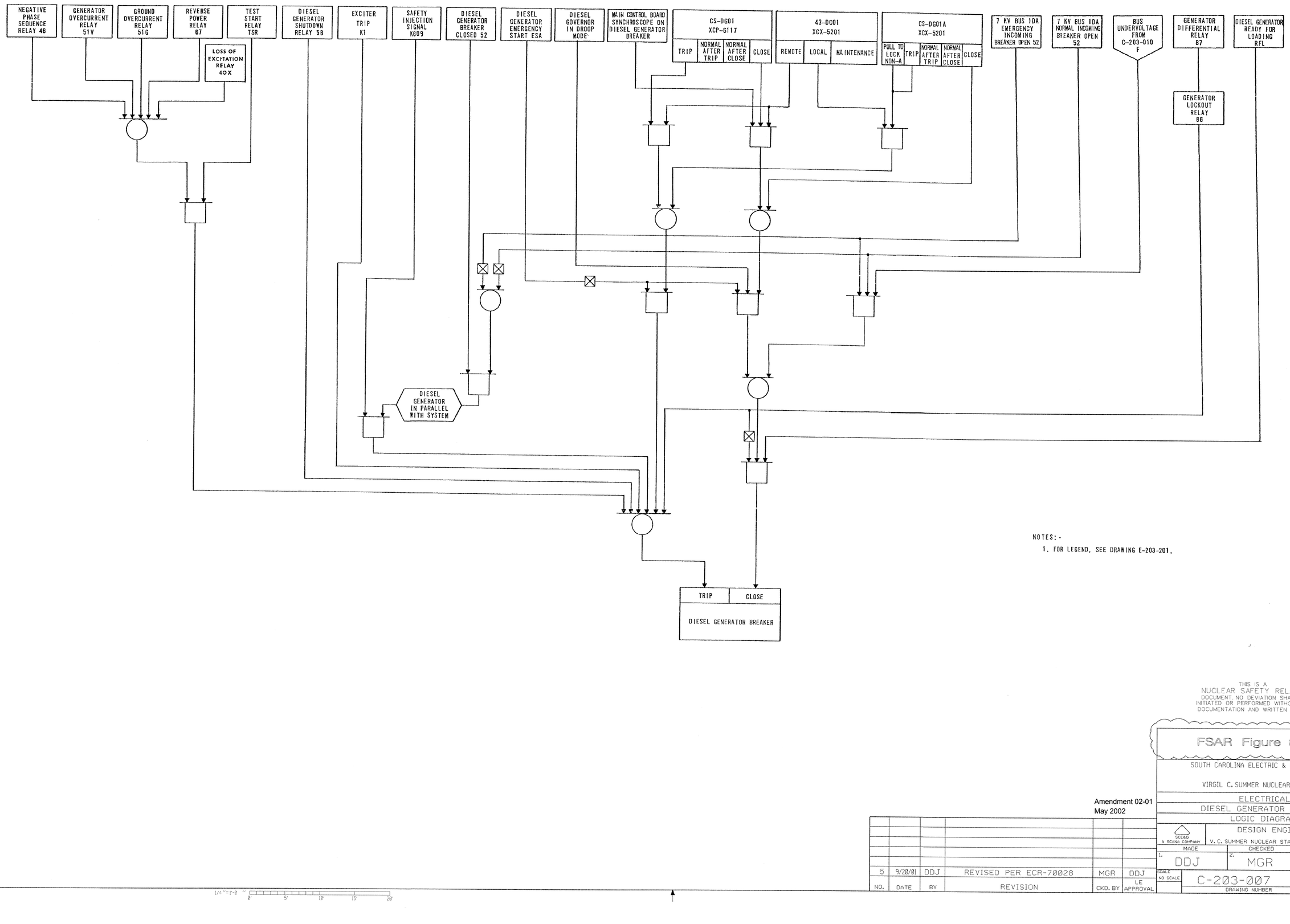

NOTES:-

1. FOR LEGEND, SEE DRAWING E-203-201.

THIS IS A
NUCLEAR SAFETY RELATED
DOCUMENT. NO DEVIATION SHALL BE
INITIATED OR PERFORMED WITHOUT PRIOR
DOCUMENTATION AND WRITTEN APPROVAL

Amendment 02-01
May 2002

NO.	DATE	BY	REVISION	CKD. BY	LE APPROVAL
5	9/20/01	DDJ	REVISED PER ECR-70028	MGR	DDJ

FSAR Figure 8.3-0j

SOUTH CAROLINA ELECTRIC & GAS COMPANY

VIRGIL C. SUMMER NUCLEAR STATION

ELECTRICAL

DIESEL GENERATOR BREAKER

LOGIC DIAGRAM

SCE&G A SCANA COMPANY

DESIGN ENGINEERING

V. C. SUMMER NUCLEAR STATION JENKINSVILLE, S. C.

MADE	CHECKED	LE APPROVAL
1. DDJ	2. MGR	3. DDJ

SCALE NO SCALE

C-203-007 — DRAWING NUMBER

SHT. NUMBER 5 — REV

1/4"=1'-0" (0' 5' 10' 15' 20')

203007_0001.m DJ14998 Thursday September 20 2001 03:13:31 PM EDT

$$$$$DGNSPEC$$$$$$$$$$$$$$$$$$$$$$$$$$$$$$$$
$$USERNAME$$ $$$$$SYTIME$$$$$$

TRANSFORMER XTF-4 DISCONNECT BREAKER CLOSED 52

TRANSFORMER XTF-4 LOCKOUT TRIPPED 86T4

VOLTAGE AVAILABLE FROM XTF-31 27-31-1DX

SYNCHRONIZING CHECK RELAY 25-1DX

REVERSE CURRENT ON FEEDER FROM ESF TRANSFORMERS 67X

BUS 1DA OVERCURRENT LOCKOUT RELAY 51BX-1DA

ESF LOADING SEQ TRIP NORMAL AND EMERGENCY FEEDER BREAKERS K37

BREAKER CONTROL SWITCH CS-ES09

TRIP	NORMAL AFTER TRIP	NORMAL AFTER CLOSE	CLOSE

TRANSFER SWITCH 43-ES10

E TO N	OFF	N TO E

EMERGENCY FEEDER BREAKER OPENING OR OPEN 52bb

DIESEL GENERATOR BREAKER OPEN

VOLTAGE AVAILABLE FROM XTF-4/5 27-5-1DX

NO VOLTAGE ON BUS 1DA 27V-1DA

1DX TO 1DA FEEDER BREAKER CLOSED 52a-05 XSW1DX

DIESEL GOVERNOR IN DROOP MODE

SYNCHROSCOPE ON NORMAL INCOMING BREAKER

ISOLATOR

TRIP	CLOSE
NORMAL BUS INCOMING BREAKER	

NOTES:-

1. FOR LEGEND, SEE DRAWING E-203-201.

1/4"=1'-0" 0' 5' 10' 15' 20'

NO.	DATE	BY	REVISION	CKD. BY	LE APPROVAL
5	5/14/14	JMR	REVISED PER ECR-50800	MGR	EM
4	1/20/2011	TGB	REVISED PER-ECR-71409	MGR	GFK
3	9/20/01	DDJ	REVISED PER ECR-70028	MGR	DDJ

RN 12-007

FSAR Figure 8.3-0k

SOUTH CAROLINA ELECTRIC & GAS COMPANY

VIRGIL C. SUMMER NUCLEAR STATION

ELECTRICAL

7.2 KV BUS 1DA - NORMAL INCOMING BREAKER

LOGIC DIAGRAM

SCE&G A SCANA COMPANY — DESIGN ENGINEERING — V. C. SUMMER NUCLEAR STATION JENKINSVILLE, S. C.

1. MADE	2. CHECKED	3. LE APPROVAL
DDJ	MGR	DDJ

SCALE NO SCALE | C-203-008 (DRAWING NUMBER) | SHT. NUMBER | 5 (REV)

$$$$$DGNSPEC$$$$$$$$$$$$$$$$$$$$$$$$$$$$$$$$
$$USERNAME$$ $$$$$SYTIME$$$$$$

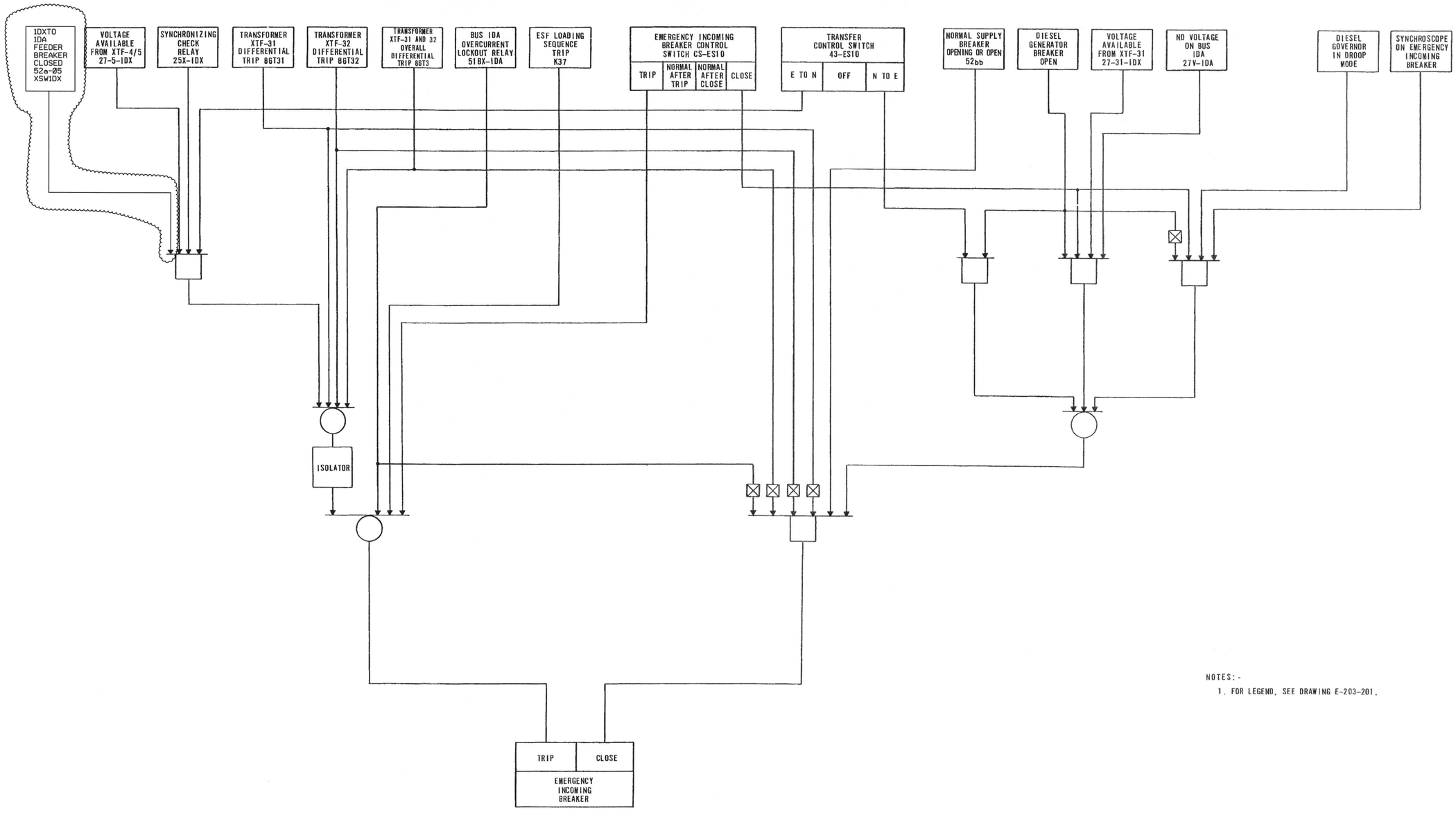

NOTES:-

1. FOR LEGEND, SEE DRAWING E-203-201.

RN 12-007

NO.	DATE	BY	REVISION	CKD. BY	LE APPROVAL
4	5/14/14	JMR	REVISED PER ECR-50800	MGR	EM
3	9/20/01	DDJ	REVISED PER ECR-70028	MGR	DDJ

FSAR Figure 8.3-01

SOUTH CAROLINA ELECTRIC & GAS COMPANY

VIRGIL C. SUMMER NUCLEAR STATION

ELECTRICAL

7.2 KV BUS 1DA - EMERGENCY INCOMING BREAKER LOGIC DIAGRAM

SCE&G A SCANA COMPANY — DESIGN ENGINEERING — V. C. SUMMER NUCLEAR STATION JENKINSVILLE, S. C.

MADE	CHECKED	LE APPROVAL
1. DDJ	2. MGR	3. DDJ

SCALE NO SCALE | C-203-009 | 4

DRAWING NUMBER | SHT. NUMBER | REV

1/4"=1'-0" 0' 5' 10' 15' 20'

	1	2	3	4	5	6
1	DG LOW LUBE OIL PRESSURE	DG OVERSPEED TRIP	DG FUEL OIL STORAGE TANK LOW/LOW LEVEL	DG FUEL OIL DAY TANK LOW/LOW LEVEL	NOTE 5	DG ENGINE FAILED START
2	DG NOT READY FOR AUTO START (NOTE 1)	DG AUX NOT IN AUTO POSITION	DG FUEL OIL STORAGE TANK HI/LOW LEVEL	DG FUEL OIL DAY TANK LOW LEVEL	NOTE 5	DG ENGINE RUNNING TROUBLE (NOTE 2)
3	DG STARTING AIR LOW PRESSURE	DG MANUAL VLVS NOT ALIGNED PROPERLY	DG FUEL OIL LOW PRESSURE	DG LOSS OF DC POWER	NOTE 5	DG ENGINE TEMPERATURE TROUBLE (NOTE 3)
4	SPARE	DG DIFF LOCKOUT ENERGIZED	DG GENERATOR TROUBLE (NOTE 4)	NOTE 5	NOTE 5	NOTE 5
5	NOTE 5	DG ENGINE TROUBLE SHUTDOWN	DG SELECT SWITCH IN MAINTENANCE	NOTE 5	SPARE	NOTE 5
6	NOTE 5	DG BARRING DEVICE ENGAGED	DG ANNUNCIATOR GROUND/POWER FAILURE	NOTE 5	NOTE 5	NOTE 5

(SHOWN TYPICAL FOR BOTH ANNUNCIATOR STATIONS XCP0636 & XCP0637.)

NOTE 1 - INCLUDES:

A) STARTING AIR LOW PRESSURE; B) DIFFERENTIAL LOCKOUT ENERGIZED; C) LOW LUBE OIL PRESSURE; D) BARRING DEVICE ENGAGED; E) DIESEL GENERATOR AUXILIARIES NOT IN AUTO POSITION; F) MANUAL VALVES NOT ALIGNED PROPERLY; G) SELECTOR SWITCH 43 IN MAINTENANCE; H) LOSS OF DC POWER; I) ENGINE TROUBLE SHUTDOWN; J) START FAILURE RELAY; K) EXCITER NOT RESET.

NOTE 2 INCLUDES:

A) LOW COOLANT PRESSURE; B) FUEL OIL PUMP RUNNING; C) WATER IN AIR TANKS; D) HIGH AFTER COOLING TEMPERATURE; E) CRANKCASE PRESSURE HIGH; F) ROCKER ARM LUBE OIL LEVEL HIGH; G) ROCKER ARM LUBE OIL PRESSURE LOW; H) LUBE OIL LEVEL LOW; I) COOLANT SYSTEM LEVEL LOW; J) FUEL OIL DAY TANK LEVEL HIGH; K) AIR INTAKE DIFFERENTIAL PRESSURE HIGH.

NOTE 3 INCLUDES:

A) LUBE OIL TEMPERATURE LOW; B) COOLING SYSTEM TEMPERATURE LOW; C) LUBE OIL TEMPERATURE HIGH; D) COOLING SYSTEM TEMPERATURE HIGH

NOTE 4 INCLUDES:

A) OVERVOLTAGE; B) OVERCURRENT 51VDG; C) REVERSE POWER 67DG; D) GEN. STATOR HIGH TEMPERATURE; E) NEG. PHASE SEQUENCE 46DG; F) FIELD GROUND 64DG; G) FIELD FAILURE 40DG; H) SYSTEM GROUND 51DG.

NOTE 5 - ALARMS ASSOCIATED WITH OTHER SYSTEMS

SOUTH CAROLINA ELECTRIC & GAS CO.
VIRGIL C. SUMMER NUCLEAR STATION

MAIN CONTROL BOARD
ANNUNCIATOR STATION
B-804-836 SH.1 & 637 SH. 1
REV. 9

Figure 8.3-0m

...\ondeck\1953\fsar830m.dgn May. 18, 1999 13:50:57

	1	2	3	4	5	6	7	8
1	LOW LUBE OIL PRESSURE	LOW COOLANT PRESSURE	LOW FUEL OIL PRESSURE	LOW ROCKER ARM LUBE OIL PRESSURE	LOW START-AIR PRESSURE	START FAILURE	ROCKER ARM LUBE PUMP OVERRUN OR CONTACTOR FAILURE	DIFFERENTIAL GENERATOR LOCKOUT
2	HIGH LUBE OIL TEMPERATURE	HIGH COOLANT TEMPERATURE	DC FUEL OIL PUMP RUNNING	HIGH ROCKER ARM LUBE OIL LEVEL	WATER IN AIR TANKS	OVERSPEED TRIP	OVERCURRENT 51 VDG	SYSTEM GROUND 51 DG
3	LOW LUBE OIL TEMPERATURE	LOW COOLANT TEMPERATURE	HIGH FUEL OIL LEVEL	HIGH CRANKCASE PRESSURE	HIGH AFTERCOOLER TEMPERATURE	ENGINE TROUBLE SHUTDOWN	REVERSE POWER 67 DG	NEGATIVE PHASE SEQUENCE 46 DG
4	LOW LUBE OIL LEVEL	LOW COOLANT LEVEL	LOW FUEL OIL LEVEL	HIGH AIR INTAKE FILTER DIFF. PRESSURE	OVERVOLTAGE	EMERGENCY SHUTDOWN	GENERATOR STATOR HIGH TEMPERATURE	FIELD GROUND 64 DG
5	LOSS OF DC POWER	BARRING DEVICE ENGAGED	LOW-LOW FUEL OIL LEVEL	SELECTOR SWITCH IN MAINTENANCE	VALVE IMPROPER POSITION	LOCAL CONTROL	AUX. SWITCH NOT IN AUTO	FIELD FAILURE 40 DG

(SHOWN TYPICAL FOR BOTH ANNUNCIATOR STATIONS XCX5201 & XCX5202.)

SOUTH CAROLINA ELECTRIC & GAS CO.
VIRGIL C. SUMMER NUCLEAR STATION

DIESEL GENERATOR LOCAL
ANNUNCIATOR STATIONS

DWG. NO. 1MS-32-120
REV. 0

Figure 8.3-On

6830n.mf(3028,jr14325) JR14325@jr14325. Thu Sep 18 14:15:16 EDT 1997

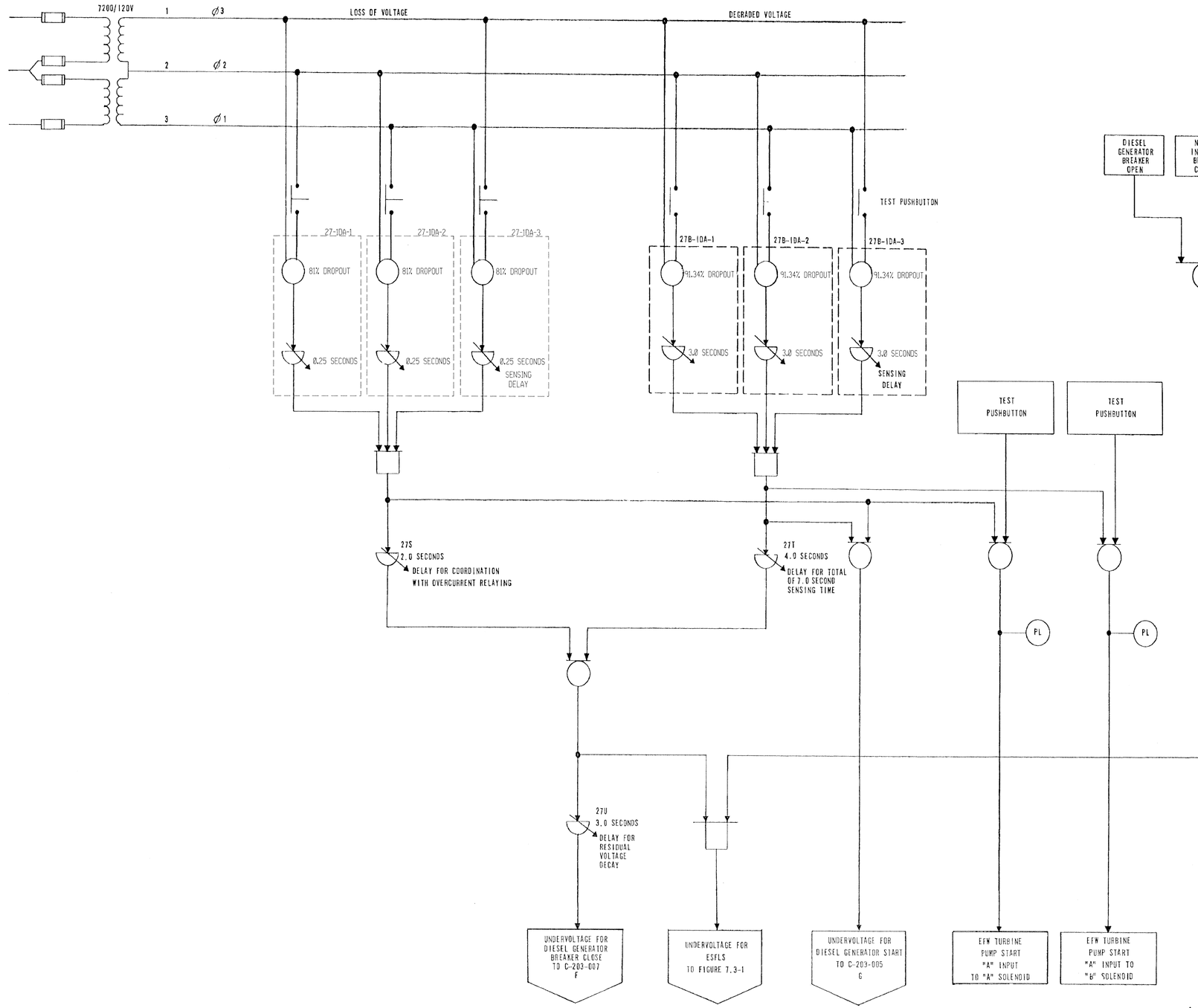

NOTES:-

1. FOR LEGEND, SEE DWG. E-203-201.
2. RELAYS 27-1DA-1, -2, AND -3 ARE ABB SOLID STATE RELAYS 411T6175-L WHICH RESET AT APPROXIMATELY 101% OF DROPOUT SETTING.
3. RELAYS 27B-1DA-1, -2, AND -3 ARE ITE STATIC RELAYS 411T4175-L WHICH RESET AT APPROXIMATELY 102% OF DROPOUT SETTING.
4. THIS LOGIC DIAGRAM IS TYPICAL FOR XSW1DB.

Amendment 02-01
May 2002

NO.	DATE	BY	REVISION	CKD. BY	LE APPROVAL
05	9/21/01	DDJ	REVISED PER ECR-70028	MGR	DDJ
04	04-24-93	SRM	REVISED PER CGSS-93-1455	RHM	KJR
03	02/27/92	DDJ	REVISED PER CGSS-28635-DE	RHM	RCB
02	10-29-91	CRR	REVISED PER MRF-21659	RHM	SGC

FSAR Figure 8.3-0o

SOUTH CAROLINA ELECTRIC & GAS COMPANY

VIRGIL C. SUMMER NUCLEAR STATION

ELECTRICAL

7.2 KV BUS 1DA-1DB UNDERVOLTAGE RELAYING

LOGIC DIAGRAM

SCE&G A SCANA COMPANY — DESIGN ENGINEERING — V. C. SUMMER NUCLEAR STATION JENKINSVILLE, S. C.

MADE	CHECKED	LE APPROVAL
1. CRR	2. RHM	3. SGC

SCALE: NO SCALE — C-203-010 — 5

DRAWING NUMBER — SHT. NUMBER — REV

1/4"=1'-0" 0' 5' 10' 15' 20'

203010_0001.m D114998 Friday September 21 2001 09:14:25 AM EDT

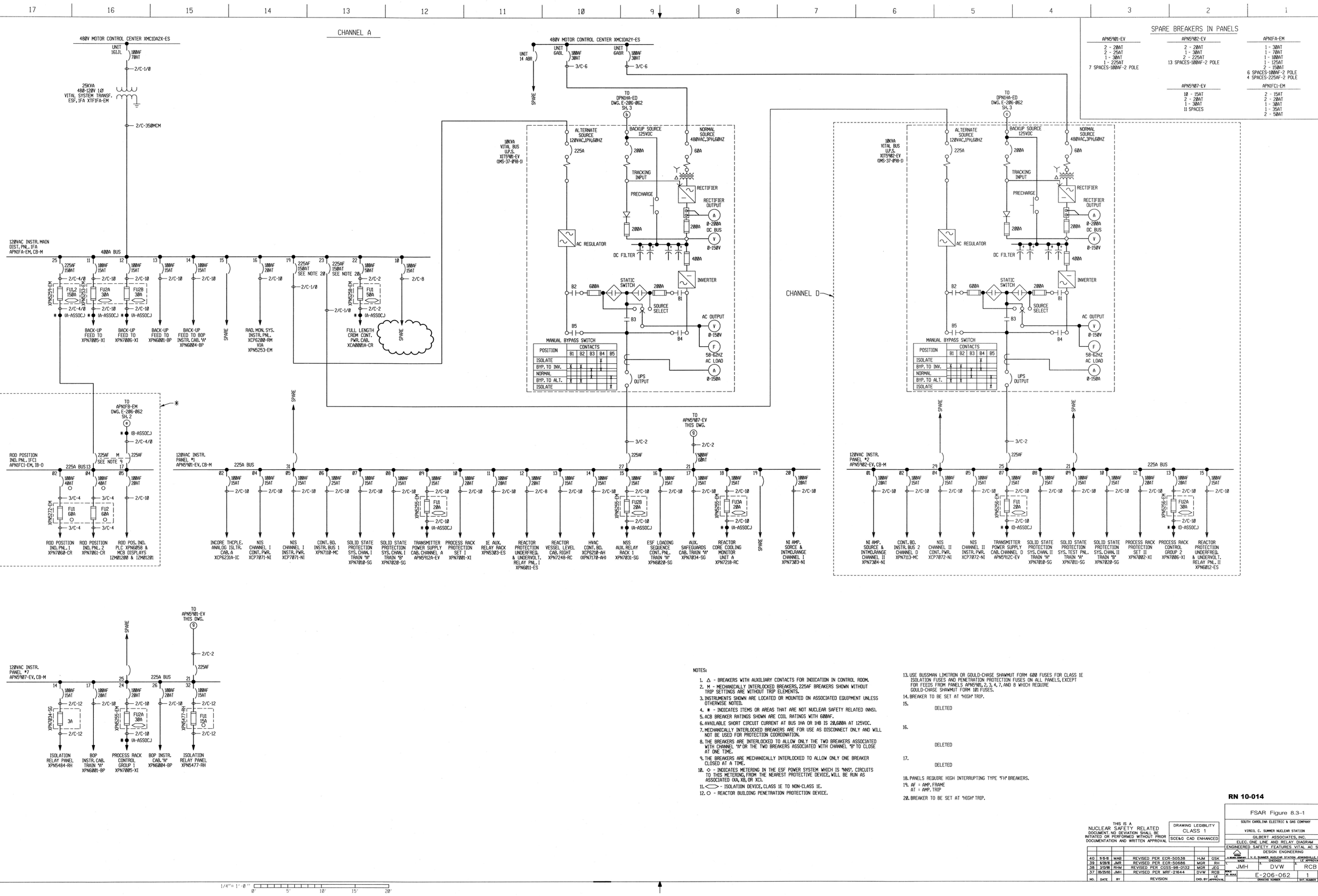

SPARE BREAKERS IN PANELS

APN5901-EV
- 2 - 20AT
- 2 - 25AT
- 1 - 30AT
- 1 - 225AT
- 7 SPACES-100AF-2 POLE

APN5902-EV
- 2 - 20AT
- 1 - 30AT
- 2 - 225AT
- 13 SPACES-100AF-2 POLE

APN5907-EV
- 10 - 15AT
- 2 - 20AT
- 1 - 30AT
- 11 SPACES

APN1FA-EM
- 1 - 30AT
- 1 - 70AT
- 1 - 100AT
- 1 - 125AT
- 2 - 150AT
- 6 SPACES-100AF-2 POLE
- 4 SPACES-225AF-2 POLE

APN1FC1-EM
- 2 - 15AT
- 2 - 20AT
- 1 - 30AT
- 1 - 35AT
- 2 - 50AT

NOTES:

1. △ - BREAKERS WITH AUXILIARY CONTACTS FOR INDICATION IN CONTROL ROOM.
2. M - MECHANICALLY INTERLOCKED BREAKERS, 225AF BREAKERS SHOWN WITHOUT TRIP SETTINGS ARE WITHOUT TRIP ELEMENTS.
3. INSTRUMENTS SHOWN ARE LOCATED OR MOUNTED ON ASSOCIATED EQUIPMENT UNLESS OTHERWISE NOTED.
4. ✱ - INDICATES ITEMS OR AREAS THAT ARE NOT NUCLEAR SAFETY RELATED (NNS).
5. ACB BREAKER RATINGS SHOWN ARE COIL RATINGS WITH 600AF.
6. AVAILABLE SHORT CIRCUIT CURRENT AT BUS 1HA OR 1HB IS 28,600A AT 125VDC.
7. MECHANICALLY INTERLOCKED BREAKERS ARE FOR USE AS DISCONNECT ONLY AND WILL NOT BE USED FOR PROTECTION COORDINATION.
8. THE BREAKERS ARE INTERLOCKED TO ALLOW ONLY THE TWO BREAKERS ASSOCIATED WITH CHANNEL "A" OR THE TWO BREAKERS ASSOCIATED WITH CHANNEL "B" TO CLOSE AT ONE TIME.
9. THE BREAKERS ARE MECHANICALLY INTERLOCKED TO ALLOW ONLY ONE BREAKER CLOSED AT A TIME.
10. ◇ - INDICATES METERING IN THE ESF POWER SYSTEM WHICH IS "NNS". CIRCUITS TO THIS METERING, FROM THE NEAREST PROTECTIVE DEVICE, WILL BE RUN AS ASSOCIATED (XA, XB, OR XC).
11. ⟨⟩ - ISOLATION DEVICE, CLASS 1E TO NON-CLASS 1E.
12. ○ - REACTOR BUILDING PENETRATION PROTECTION DEVICE.
13. USE BUSSMAN LIMITRON OR GOULD-CHASE SHAWMUT FORM 600 FUSES FOR CLASS 1E ISOLATION FUSES AND PENETRATION PROTECTION FUSES ON ALL PANELS, EXCEPT FOR FEEDS FROM PANELS APN5901, 2, 3, 4, 7, AND 8 WHICH REQUIRE GOULD-CHASE SHAWMUT FORM 101 FUSES.
14. BREAKER TO BE SET AT "HIGH" TRIP.
15. DELETED
16. DELETED
17. DELETED
18. PANELS REQUIRE HIGH INTERRUPTING TYPE "FH" BREAKERS.
19. AF = AMP. FRAME
    AT = AMP. TRIP
20. BREAKER TO BE SET AT "HIGH" TRIP.

RN 10-014

THIS IS A NUCLEAR SAFETY RELATED DOCUMENT. NO DEVIATION SHALL BE INITIATED OR PERFORMED WITHOUT PRIOR DOCUMENTATION AND WRITTEN APPROVAL

DRAWING LEGIBILITY CLASS 1
SCE&G CAD ENHANCED

NO.	DATE	BY	REVISION	CKD. BY	LE APPROVAL
40	5-5-10	MAB	REVISED PER ECR-50538	HJM	GSK
39	6/28/10	JMR	REVISED PER ECR-50686	MGR	RH
38	3/3/98	RHM	REVISED PER CGSS-98-0132	MGR	JEG
37	09/25/03	JMH	REVISED PER MRF-21644	DVW	RCB

FSAR Figure 8.3-1

SOUTH CAROLINA ELECTRIC & GAS COMPANY
VIRGIL C. SUMMER NUCLEAR STATION
GILBERT ASSOCIATES, INC.
ELEC. ONE LINE AND RELAY DIAGRAM
ENGINEERED SAFETY FEATURES VITAL AC SYS.
DESIGN ENGINEERING

DESIGN A BGMR COMPANY	V. C. SUMMER NUCLEAR STATION JENKINSVILLE, S. C.
MADE	CHECKED
JMH	DVW
RCB	

E-206-062 | 1 | 40
DRAWING NUMBER | SHT. NUMBER | REV.

CHANNEL B

480V MOTOR CONTROL CENTER XMC1D82X-ES

UNIT 6ABR 100AF 60AT — 2/C-1/0

25KVA 4160-120/V 1Ø VITAL SYSTEM TRANSF. XSF,1B XTF1FB-EM

2/C-350MCM

120VAC INST & MAIN DIST. PNL. 1F1 XPNFB-EM, C3-M

400A BUS

11	100AF 15AT	2/C-10	BACK-UP FEED TO XPN7027-X1
12	100AF 15AT	2/C-10	BACK-UP FEED TO XPN7006-X1
13	100AF 15AT	2/C-10	BACK-UP FEED TO XPN6002-BP
15	100AF 15AT	2/C-8	REDUNDANT COMMUNICATION SYSTEM
16	100AF 20AT	2/C-10	BACK-UP FEED TO BOP INSTR. CAB. "B" XPN6005-BP
17	100AF 20AT	2/C-10	RAD. MON. SYS. INSTR. PNL., XCP6200-EM VIA XPN5254-EM
19	225AF 150AT SEE NOTE 20	2/C-1/0	TO APN1FC1-EM DWG. E-206-062 SH. 1
23	225AF 150AT SEE NOTE 20	2/C-1/0	
25	225AF 150AT	2/C-4/0	

XPN5254-EM: FU3A 30A (B ASSOC); FU3B 30A (B ASSOC)

XPN5254-EM: FU1 15A (A-TRAIN); FU2 15A (B ASSOC.)

480V MOTOR CONTROL CENTER XMC1D82Y-ES

UNIT 14 FGL — SPARE

UNIT 5IJL 100AF 30AT — 3/C-6

UNIT 5IJR 100AF 30AT — 3/C-6

TO DPN1HB-ED DWG. E-206-062 SH. 4 (F)

10KVA VITAL BUS U.P.S. XIT5903-EV (IMS-37-098-1)

ALTERNATE SOURCE 120VAC,1PH,60HZ — 225A

BACKUP SOURCE 125VDC — 200A

NORMAL SOURCE 480VAC,3PH,60HZ — 60A

TRACKING INPUT

PRECHARGE — 200A

RECTIFIER — RECTIFIER OUTPUT (A) 0-200A

DC BUS (V) 0-150V

AC REGULATOR

DC FILTER — 400A

INVERTER

B2 600A — STATIC SWITCH — 200A B1

SOURCE SELECT — B3

B5 — B4

AC OUTPUT (V) 0-150V — (F) 58-62HZ AC LOAD — (A) 0-150A

UPS OUTPUT

MANUAL BYPASS SWITCH

POSITION	CONTACTS B1	B2	B3	B4	B5
ISOLATE					X
BYP. TO INV.		X	X		
NORMAL	X			X	
BYP. TO ALT.		X	X		
ISOLATE					X

CHANNEL E

10KVA VITAL BUS U.P.S. XIT5904-EV (IMS-37-098-1)

TO DPN1HB-ED DWG. E-206-062 SH. 4 (G)

ALTERNATE SOURCE 120VAC,1PH,60HZ — 225A

BACKUP SOURCE 125VDC — 200A

NORMAL SOURCE 480VAC,3PH,60HZ — 60A

TRACKING INPUT

PRECHARGE — 200A

RECTIFIER — RECTIFIER OUTPUT (A) 0-200A

DC BUS (V) 0-150V

AC REGULATOR

DC FILTER — 400A

INVERTER

B2 600A — STATIC SWITCH — 200A B1

SOURCE SELECT — B3

B5 — B4

AC OUTPUT (V) 0-150V — (F) 58-62HZ AC LOAD — (A) 0-150A

UPS OUTPUT

MANUAL BYPASS SWITCH

POSITION	CONTACTS B1	B2	B3	B4	B5
ISOLATE					X
BYP. TO INV.		X	X		
NORMAL	X			X	
BYP. TO ALT.		X	X		
ISOLATE					X

TO APN5908 THIS DWG. (C)

3/C-2 — 225AF — 2/C-2 — 100AF 60AT

120VAC INSTR. PANEL *3 APN5903-EV, CB-M

225A BUS

03			SPARE
04	100AF 15AT	2/C-10	NIS CHANNEL III CONT. PWR. XCP7073-NI
05	100AF 15AT	2/C-10	NIS CHANNEL III INSTR. PWR. XCP7073-NI
06	100AF 20AT	2/C-10	PROCESS RACK PROTECTION SET III XPN7003-X1 PWR. SUPPLY *1
07	100AF 20AT	2/C-10	IE AUX. RELAY RACK XPN5303-ES
08	100AF 15AT	2/C-10	SOLID STATE PROTECTION SYS. CHAN. III TRAIN "A" XPN7010-SG
09	100AF 15AT	2/C-10	SOLID STATE PROTECTION SYS. CHAN. III TRAIN "B" XPN7020-SG
10	100AF 15AT	2/C-10	TRANSMITTER POWER SUPPLY CAB. CHANNEL B APN5912B-EV
12	100AF 15AT	2/C-10	CONT. BD. INSTR. BUS 3 CHANNEL B XPN7123-MC
13	100AF 15AT	2/C-8	REACTOR PROTECTION UNDERFREQ. & UNDERVOLT. RELAY PNL. III XPN6013-ES
14	100AF 15AT	2/C-10	HVAC CONT. BD. XPN7176-AH
15	100AF 15AT	2/C-10	EARTHQUAKE MONITORING PANEL XPN6041-EI
16	100AF 15AT	2/C-10	ESF LOADING SEQUENCE CONT. PNL., TRAIN "B" XPN6025-SG
17	100AF 15AT	2/C-10	NSS AUX. RELAY RACK 2 XPN7032-SG
18	100AF 15AT	2/C-10	AUX. SAFEGUARDS CAB. TRAIN "B" XPN7035-SG
19	100AF 15AT	2/C-10	INCORE THCPLE. ANALOG ISLTR. CAB. B XCP6231B-IC

XPN5257-EM: FU2 20A (B ASSOC); FU1 20A (B ASSOC); FU3B 20A (B ASSOC)

120VAC INSTR. PANEL *4 APN5904-EV, CB-M

225A BUS

04	100AF 15AT	2/C-10	NIS CHANNEL IV INSTR. PWR. XCP7074-NI
05	100AF 15AT	2/C-10	NIS CHANNEL IV CONT. PWR. XCP7074-NI
07	100AF 15AT	2/C-10	SOLID STATE PROTECTION SYS. CHAN. IV TRAIN "A" XPN7010-SG
08	100AF 15AT	2/C-10	SOLID STATE PROTECTION SYS. CHAN. IV TRAIN "B" XPN7020-SG
09	100AF 15AT	2/C-10	SOLID STATE PROTECTION TEST PNL. TRAIN "B" XPN7021-SG
10	100AF 20AT	2/C-10	PROCESS RACK PROTECTION SET IV XPN7004-X1
11	100AF 20AT	2/C-10	PROCESS RACK CONTROL GROUP 4 XPN7028-X1
13	100AF 15AT	2/C-10	REACTOR VESSEL LEVEL CAB. LEFT XPN7248-RC
16	100AF 15AT	2/C-10	CONT. BD. INSTR. BUS 4 CHANNEL E XPN7122-MC
22	100AF 15AT	2/C-10	REACTOR CORE COOLING UNIT B XPN7218-RC

XPN5257-EM: FU4A 30A (E ASSOC); FU1B 20A (E ASSOC)

120V A. INSTR. PANEL *B APN5908-E, CB-H

225A BUS

21	100AF 5AT	2/C-12	ISOLATION RELAY PANEL XPN5483-RH
22	100AF 15AT	2/C-12	ISOLATION RELAY PANEL XPN 484-1 H
23	100AF 20AT	2/C-10	BOP INSTR CAB. TRAIN "B" XPN6032-BP
24	100AF 20AT	2/C-10	PROCESS RACK CONTROL GROUP 3 XPN7007-X1
26	100AF 20AT	2/C-10	BOP INSTR. CAB. "B" XPN6005-BP
28	100AF 20AT	2/C-10	PROCESS RACK PROTECTION SET III XPN7003-X1 PWR. SUPPLY *2 CARD FRAME *8
29			SPARE

XPN5257-EM: FU3A 30A (B ASSOC)

TO APN5903-EV THIS DWG. (E)

2/C-2 — 225AF

NOTES:

1. FOR NOTES, SEE DRAWING E-206-062, SHEET 1.

SPARE BREAKERS IN PANELS

APN5903-EV	APN5904-EV	APN1FB-EM
6 - 20AT 1 - 25AT 1 - 60AT 4 SPACES-100AF-2 POLE	5 - 15AT 2 - 20AT 1 - 25AT 2-225AT 7 SPACES-100AF-2 POLE	1 - 70AT 1 - 100AT 1 - 125AT 1 - 150AT 7 SPACES-100AF-2 POLE 4 SPACES-225AF-2 POLE
	APN5908-EV 10 - 15AT 1 - 20AT 1 - 100AT 11 SPACES	

DRAWING LEGIBILITY CLASS 1

NUCLEAR SAFETY RELATED

FSAR Figure 8.3-2

SOUTH CAROLINA ELECTRIC & GAS COMPANY

V.C. SUMMER NUCLEAR STATION

ELECTRICAL

ONE LINE AND RELAY DIAGRAM

ENGINEERED SAFETY FEATURES VITAL AC SYSTEM

DESIGN ENGINEERING

V.C. SUMMER NUCLEAR STATION, JENKINSVILLE, S.C.

DESIGNED: JRJ — DRAWN: CWH — CHECKED: SMC

SCALE: NO SCALE — DRAWING NUMBER: E-206-062 — SHT. NUMBER: 2 — REV: 34

NO.	DATE	BY	REVISION	CHG. BY	APPROVAL
34	9/20/01	DDJ	REVISED PER ECN-7002B	MGR	DDJ

Amendment 02-01
May 2002

1/16"=1'-0" 0' 5' 10' 15' 20'

206062_Q002.m DJJ 4998 Thursday September 27 2001 01:56:02 PM EDT

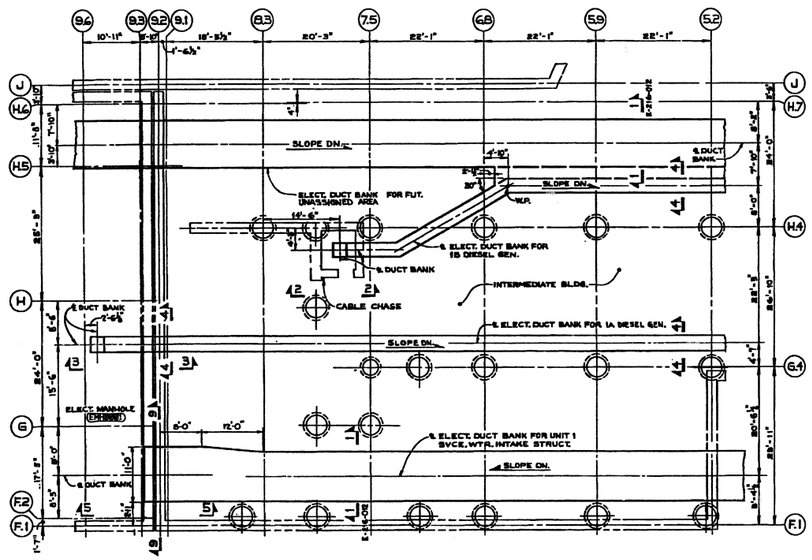

ENLARGED PLAN A
SCALE: 1/8"=1'-0"
(COORD. B-8)

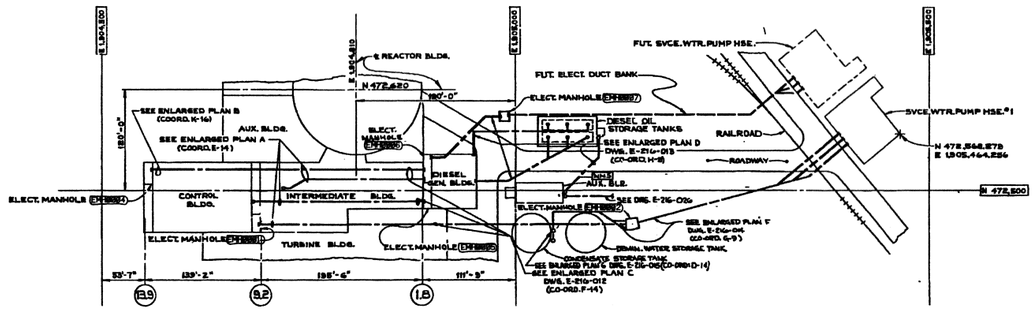

PLOT PLAN
SCALE: 1"=80'-0"

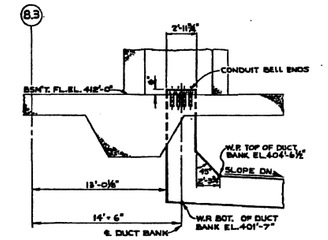

SECT. 2-2
SCALE: 1/4"=1'-0"
(COORD. C-14)

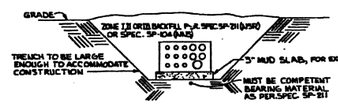

BACKFILL DETAIL

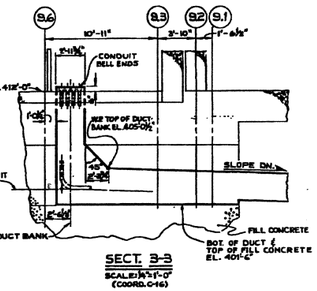

SECT. 3-3
SCALE: 3/8"=1'-0"
(COORD. C-16)

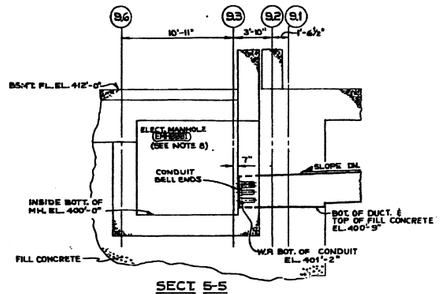

SECT. 5-5
SCALE: 3/8"=1'-0"
(COORD. D-16)

NOTES:
A. ALL CONDUIT 3½" EXCEPT WHERE NOTED.
B. ⊕ SEE NOTE #3 & #4.
C. SEE CONDUIT CHART 1- DWG. E-216-013.

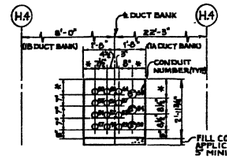

SECT. 4-4
SCALE: 3/8"=1'-0"
(COORDS. B-8 & C-12, 16)

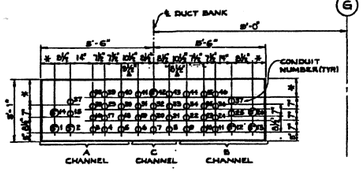

NOTES:
A. ALL CONDUIT 3½" EXCEPT WHERE NOTED
B. ⊕ SEE NOTE #3 & #4.
C. SEE CONDUIT CHART #1 DWG. E-216-012

SECT. 9-9
SCALE: 1/2"=1'-0"
(COORD. D-16)

REFERENCES:-

E-216-115	ARRANGEMENT OF CABLE TRAYS - ELECTRICAL BUILDING
E-216-116	CONDUIT LAYOUT - ELECTRICAL BUILDING
E-216-013	DUCT RUNS FOR DIESEL GENERATOR CIRCUITS OUTDOOR AREA - EAST END
E-216-013	DUCT RUNS FOR DIESEL GENERATOR CIRCUITS OUTDOOR AREA - EAST END
E-216-014	DUCT RUNS FOR DIESEL GENERATOR CIRCUITS TO SERVICE WATER STORAGE STRUCTURE
E-216-001	BUILDING, CABLE TUNNELS, TRENCHES AND DUCT RUNS - GENERAL ARRANGEMENT
E-216-011 SH.2	UNDERGROUND DUCT RUNS FOR PLANT SECURITY - EAST OF PLANT.

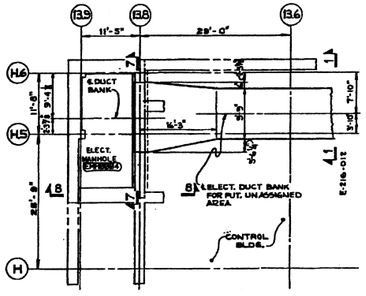

ENLARGED PLAN B
SCALE: 3/8"=1'-0"
(COORD. B-8)

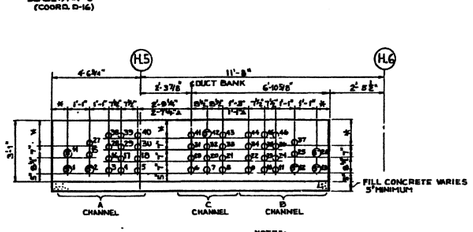

SECT. 7-7
SCALE: NONE
(COORD. J-16)

NOTES:
A. ALL CONDUIT 3½" EXCEPT WHERE NOTED.
B. ⊕ SEE NOTE #3 & #4.
C. SEE CONDUIT CHART #1 DWG. E-216-012.

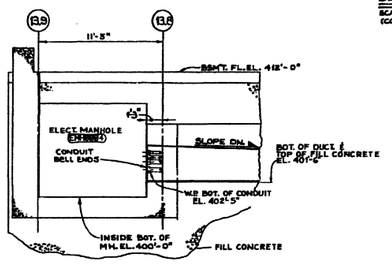

SECT. 8-8
SCALE: 3/8"=1'-0"
(COORD. J-16)

NOTES:-
1. ALL CONDUITS SHALL BE PVC SCHEDULE 40, OR ENGINEER APPROVED EQUAL.
2. ALL CONDUIT BENDS SHALL HAVE 36" RADII MINIMUM, UNLESS NOTED OTHERWISE.
3. "CONDUITS SHALL BE POSITIONED USING PLASTIC TYPE SPACERS. SPACE AND DIMENSIONS OF CONDUIT SPACERS ARE OPTIONAL WITH CONTRACTOR. INSTALLED ALL SPACERS WHEN POSSIBLE AT THE OPTION OF THE FIELD OR SUPPORT CONDUIT BY STEEL USING #16 TIE TO SECURE AND MAINTAIN PROPER SEPARATION".
4. "CONDUITS TO BE INSTALLED TO THE DIMENSIONS AS SHOWN WITH AN ALLOWABLE TOLERANCE OF 2", EXCEPT IN INSTANCES WHERE A DEVIATION OF 2" WILL BE ALLOWED IN ORDER TO CLEAR REINFORCING STEEL. (SEE NOTE 11), THESE PERMISSIBLE DEVIATIONS SHALL SUPERSEDE THOSE TOLERANCES LISTED IN SPECIFICATION 202. DIMENSIONAL DIFFERENCES DUE TO TOLERANCES SHALL BE MADE UP IN AREAS SHOWED WITH *. HOWEVER, NOTE 3 SHALL NOT BE VIOLATED.
5. ALL CONDUITS SHALL HAVE A MINIMUM COVERAGE OF 3" OF CONCRETE ON ALL SIDES.
6. CONDUITS SHALL BE TERMINATED WITH BELL ENDS AT EACH END OF THE RUN, UNLESS NOTED OTHERWISE.
7. THIS DRAWING TO BE WORKED IN CONJUNCTION WITH STRUCTURAL DWGS. S-414-001, S-414-002, S-434-009, S-434-011, S-434-013, AND S-434-015.
8. TYPE SUBSTRUC FOR CHANNEL SEPARATION WILL BE SHOWN ON DUCT RUN CONDUIT LAYOUT DWG. E-215-106. HANGER SUPPORTS WILL BE DETAILED ON STRUCTURAL DRAWINGS.
CABLE TRAYS WILL BE SHOWN ON DWG. E-214-100.
8A. DWG - INDICATES CONDUITS TO RUN NON-NUCLEAR SAFETY RELATED CIRCUITS. ALL OTHER CONDUITS ARE FOR SAFETY RELATED CIRCUITS.
8B. ALL CONDUIT, CONDUIT FITTINGS, AND MISCELLANEOUS HARDWARE SHALL BE NON-NUCLEAR SAFETY RELATED MATERIAL. CONDUITS FOR SAFETY RELATED CIRCUITS SHALL BE INSTALLED IN ACCORDANCE WITH A WORK PROCEDURE AS REQUIRED BY SECTION 1-18.2 OF THE SPECIFICATION 202.
10. PVC EXPANSION FITTINGS MAY BE USED AS NECESSARY TO ALLOW FOR THE THERMAL EXPANSION AND CONTRACTION OF THE PVC CONDUITS PRIOR TO POURING CONCRETE. THESE FITTINGS SHALL BE STANDARD 24-INCH OFF ADJACENT CONDUITS
11. Δ - INDICATES THE MINIMUM ALLOWABLE SPACING. NO TOLERANCE WILL BE ACCEPTABLE BELOW THIS DIMENSION.

SEE NOTES 9A & 9B

THIS IS A NUCLEAR SAFETY RELATED DRAWING. NO REVISION SHALL BE INITIATED OR PERFORMED WITHOUT PRIOR ORGANIZATIONAL AND WRITTEN APPROVAL

RN 07-026
April 2008

FSAR Figure 8.3-2a

SOUTH CAROLINA ELECTRIC & GAS COMPANY
VIRGIL C. SUMMER NUCLEAR STATION
ELECTRICAL
DUCT RUNS FOR DIESEL GENERATOR CIRCUITS
MAIN PLANT AREA WEST END
DESIGN ENGINEERING

NO.	DATE	BY	REVISION	DES. BY	CHECKED	E.E. APPROVAL
14	8/25/87	JHR	REVISED PER ECR-78674	MGR	GC	
13	8/28/86	LCL	REVISED PER ECR-58557	TMH	JEY	
12	9/24/85	DDJ	REVISED PER ECR-78028	MGR	DDJ	

A KOIN-TECH COMPANY — V. C. SUMMER NUCLEAR STATION — JENKINSVILLE, S.C.
DESIGNED: DDJ | CHECKED: MGR | E.E. APPROVAL: DDJ
DRAWING NUMBER: E-216-011 | SHT. NUMBER: 1 | REV: 14

1/4"=1'-0" (8" 5" 18" 15" 29")

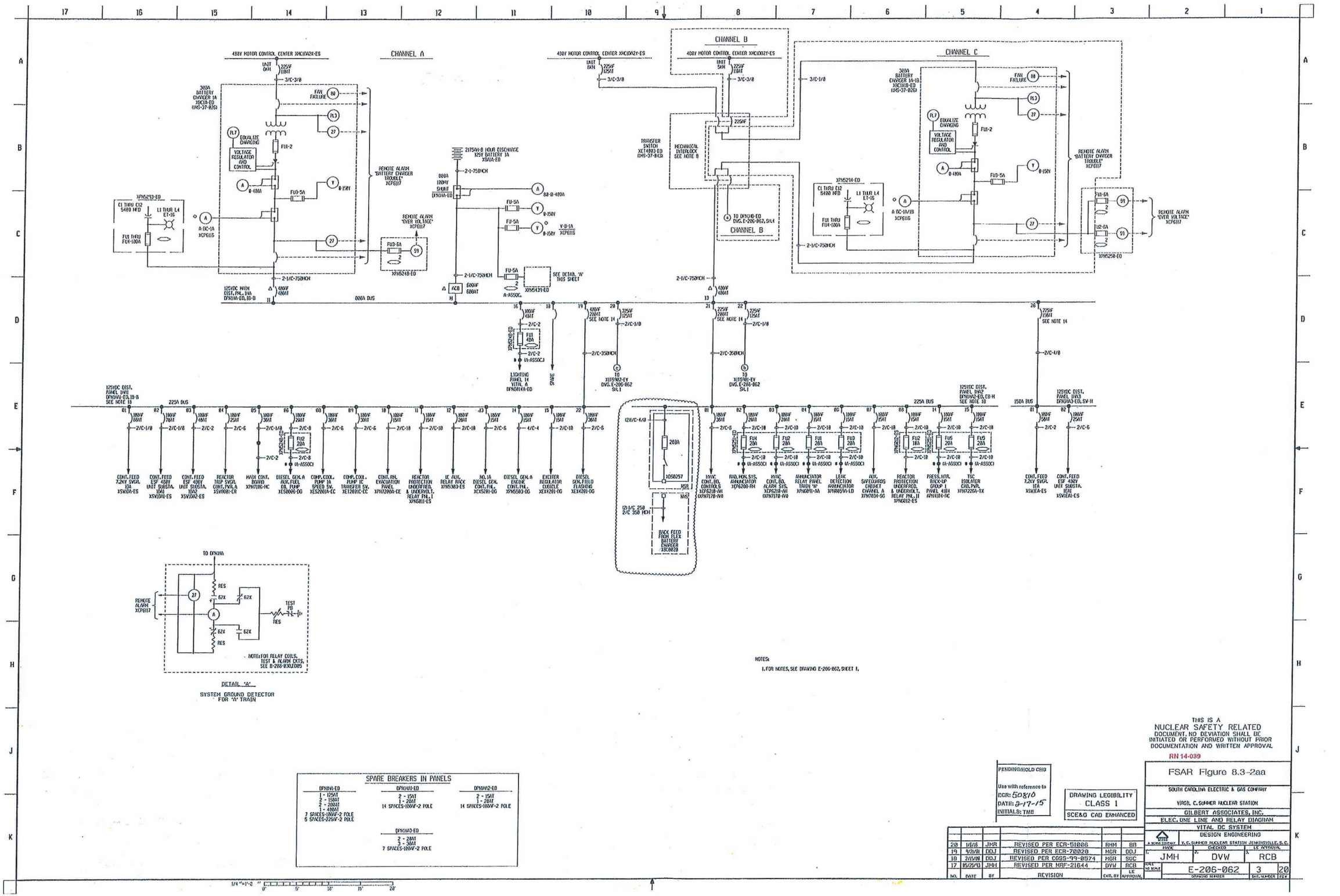

THIS IS A
NUCLEAR SAFETY RELATED
DOCUMENT. NO DEVIATION SHALL BE INITIATED OR PERFORMED WITHOUT PRIOR DOCUMENTATION AND WRITTEN APPROVAL

RN 14-039

PENDING/HOLD CHG
Use with reference to ECR: 50810
DATE: 9-17-15
INITIALS: TMB

DRAWING LEGIBILITY
CLASS 1
SCE&G CAD ENHANCED

NO.	DATE	BY	REVISION	EXM. BY	LE APPROVAL
20	1/6/16	JMR	REVISED PER ECR-51006	RHM	BR
19	9/2/08	DDJ	REVISED PER ECR-78028	MGR	DDJ
18	2/15/08	DDJ	REVISED PER CGSS-99-0574	MGR	SOC
17	05/25/93	JMH	REVISED PER NRF-21644	DVW	RCB

FSAR Figure 8.3-2aa

SOUTH CAROLINA ELECTRIC & GAS COMPANY
VIRGIL C. SUMMER NUCLEAR STATION
GILBERT ASSOCIATES, INC.
ELEC. ONE LINE AND RELAY DIAGRAM
VITAL DC SYSTEM
DESIGN ENGINEERING
V.C. SUMMER NUCLEAR STATION JENKINSVILLE, S.C.

DRAWN	CHECKED	LE APPROVAL
1. JMH	2. DVW	3. RCB

ONLY NO SCALE

E-206-062 | 3 | 20
DRAWING NUMBER | SHT. NUMBER | REV

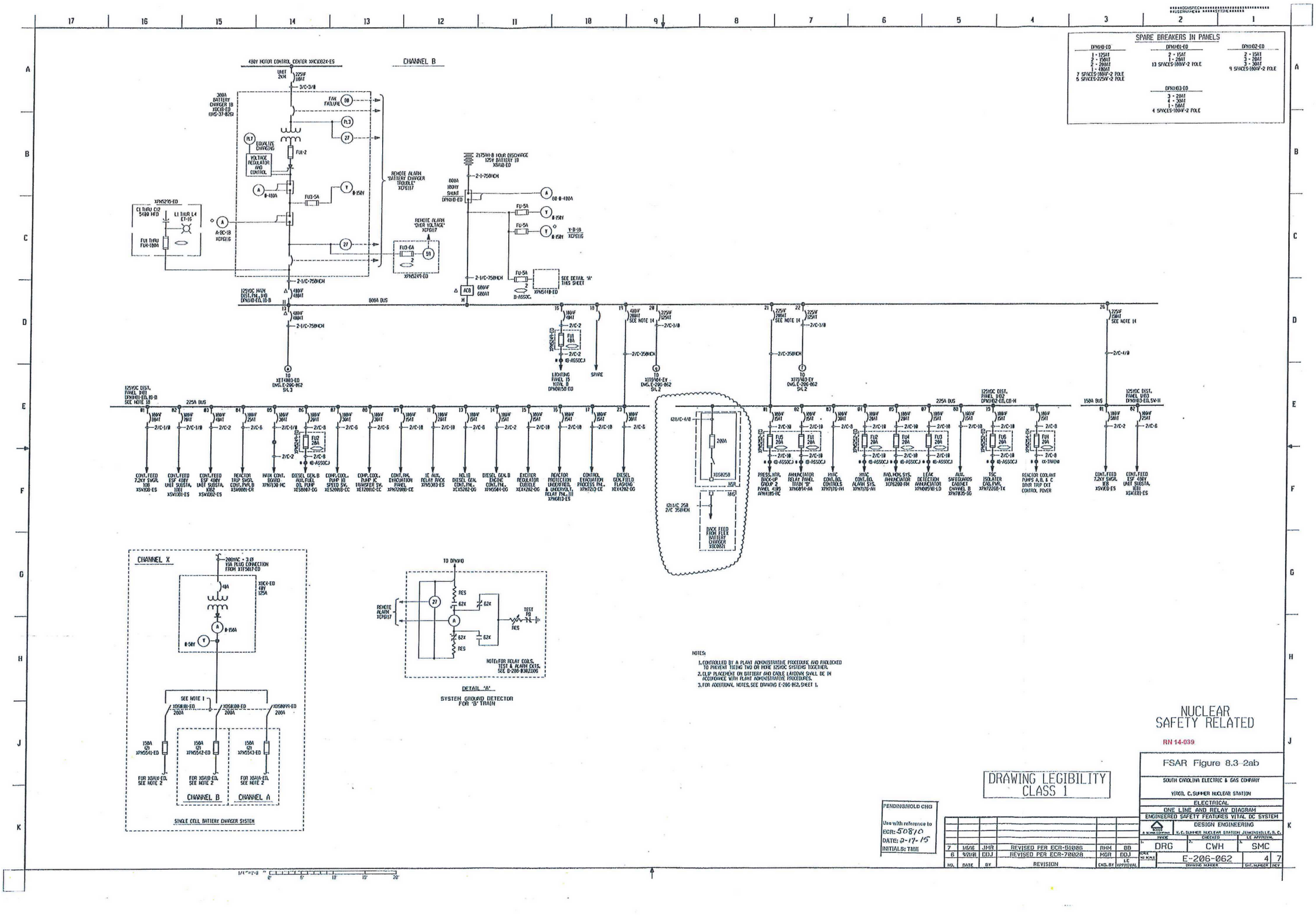
SPARE BREAKERS IN PANELS
DPN1B1-EO
2 - 15AT
1 - 20AT
13 SPACES-100VF-2 POLE
DPN1B2-EO
2 - 15AT
3 - 20AT
9 SPACES-100VF-2 POLE
DPN1B3-EO
3 - 20AT
2 - 30AT
1 - 50AT
4 SPACES-100VF-2 POLE
480V MOTOR CONTROL CENTER XMC0824-ES
CHANNEL B
UNIT 2KM
225AF 100AT
3/C-3/0
300A BATTERY CHARGER 1B XBCIB-EO (IHS-37-B25)
FAN FAILURE
EQUALIZE CHARGING
VOLTAGE REGULATOR AND CONTROL
FU1-2
FU3-5A
FU3-6A
REMOTE ALARM BATTERY CHARGER TROUBLE XCFE117
REMOTE ALARM "OVER VOLTAGE" XCFE117
XFR5295-EO
CT THRU C12 5400 MCD
LT THRU L4 ET-15
FU1 THRU FU4-100A
A-BC-1B XCFE116
XFR5249-EO
2175AH-8 HOUR DISCHARGE 125V BATTERY 1B XBAIB-EO
2-1-750MCM
800A 100MV SHUNT DPN1B-EO
FU-5A
B-156N
Y-B-1B XCFE116
SEE DETAIL 'W' THIS SHEET
XFR5248-EO
ACB 600AF 600AT
B-ASSOC.
125VDC MAIN DIST. PNL. 1AB DPN1B-EO, 1B-B
800A BUS
480AF 400AT
2-1/C-750MCM
TO XEE4803-EO DWG. E-206-862 SH. 3
100AF 40AT
2/C-2
FU1 40A
XDS6251-EO
43-ASSOCJ
LIGHTING PANEL 1B VITAL 1 DPN1B1S0-EO
SPARE
225AF 200AT SEE NOTE 14
225AF 125AT
2/C-1/0
2/C-350MCM
TO XIE1904-EY DWG. E-206-862 SH. 2
TO XIE1903-EY DWG. E-206-862 SH. 2
150A BUS
125VDC DIST. PANEL 1B1 DPN1B1-EO, 1B-B SEE NOTE 15
225A BUS
125VDC DIST. PANEL 1B2 DPN1B2-EO, CD-H
125VDC DIST. PANEL 1B3 DPN1B3-EO, SV-H
CONT. FEED 7.2KV SWGR. 1CB XSWICB-ES
CONT. FEED ESF 480V UNIT SUBSTA. 1D81 XSWID81-ES
CONT. FEED ESF 480V UNIT SUBSTA. 1B82 XSWIB82-ES
REACTOR TRIP SWGR. CONT. PNL B XSW0001-CR
MAIN CONT. BOARD XPN7130-MC
DIESEL GEN. B AUX. FUEL OIL PUMP XE5B07-DG
COMP. COOL. PUMP 1B SPEED SW. XES2001B-CC
COMP. COOL. PUMP 1C TRANSFER SW. XE1208B-CC
CONT. PNL EVACUATION PANEL XPN7208B-CE
1E AUX. RELAY RACK XPN5303-ES
NO. 1B DIESEL GEN. CONT. PNL. XC15202-DG
DIESEL GEN. B ENGINE CONT. PNL. XPN2581-DG
EXCITER REGULATOR CUBICLE XEX4282-DG
REACTOR PROTECTION UNDERFREQ. & UNDERVOLT. RELAY PNL. III XPN6813-ES
CONTROL EVACUATION PROCESS PNL. XPN7213-CE
DIESEL GEN. FIELD FLASHING XEX4282-DG
121/C-1/0
200A
XDS8258
121/C 2SB 2/C 350MCM
BACK FEED FROM FLEX BATTERY CHARGER XBCIBM1
PRESS. NTR. BACK-UP GROUP 2 PANEL 41B5 APN41B5-RE
ANNUNCIATOR RELAY PANEL "B" XPN6814-VA
HVAC CONT. EQ. CONTROLS XPN7176-VH
HVAC CONT. EQ. ALARM SYS. XPN7176-VH
RAD. MON. SYS. ANNUNCIATOR XDR6288-RM
LEAK DETECTION ANNUNCIATOR XPN6958-LD
AUX. SAFEGUARDS CABINET CHANNEL B XPN7835-SG
TSC ISOLATER CAB. PNL. XPN7226B-TX
REACTOR COOLANT PUMPS A, B, & C ERGR TRIP DET CONTROL POWER
CONT. FEED 7.2KV SWGR. 1EB XSWIEB-ES
CONT. FEED ESF 480V UNIT SUBSTA. 1EB1 XSWIEB1-ES
CHANNEL X
208VAC - 3 Ø VIA PLUG CONNECTION FROM XITE867-EO
XDC4-EO 48V 125A
49A
A-156A
Y-56V
SEE NOTE 1
XDS8181-EO 200A
XDS8188-EO 200A
XDS8999-EO 200A
150A 125V XFM6541-EO
150A 125V XFM6542-EO
150A 125V XFM6543-EO
FOR XBAIC-EO, SEE NOTE 2
FOR XBAIB-EO, SEE NOTE 2
FOR XBAIA-EO, SEE NOTE 2
CHANNEL B
CHANNEL A
SINGLE CELL BATTERY CHARGER SYSTEM
TO DPN1B
RES
62K
REMOTE ALARM XFR5117
TEST PB
NOTE: FOR RELAY COILS, TEST & ALARM CKTS, SEE D-208-B3BLE005
DETAIL 'A'
SYSTEM GROUND DETECTOR FOR 'B' TRAIN
NOTES:
1. CONTROLLED BY A PLANT ADMINISTRATIVE PROCEDURE AND INTERLOCKED TO PREVENT TYING TWO OR MORE 125VDC SYSTEMS TOGETHER.
2. CLIP PLACEMENT ON BATTERY AND CABLE LAYDOWN SHALL BE IN ACCORDANCE WITH PLANT ADMINISTRATIVE PROCEDURES.
3. FOR ADDITIONAL NOTES, SEE DRAWING E-206-862, SHEET 1.
NUCLEAR SAFETY RELATED
RN 14-039
DRAWING LEGIBILITY CLASS 1
PENDING/HOLD CHG
Use with reference to ECR: 50810
DATE: 2-17-15
INITIALS: TME
7 1/6/15 JMR REVISED PER ECR-15086 RHM BB
6 9/2/81 DDJ REVISED PER ECR-78028 MGR DDJ
NO. DATE BY REVISION CKD. BY LC APPROVAL
FSAR Figure 8.3-2ab
SOUTH CAROLINA ELECTRIC & GAS COMPANY
V.C. SUMMER NUCLEAR STATION
ELECTRICAL
ONE LINE AND RELAY DIAGRAM
ENGINEERED SAFETY FEATURES VITAL DC SYSTEM
DESIGN ENGINEERING
V.C. SUMMER NUCLEAR STATION, JENKINSVILLE, S.C.
DRAWN DRG
CHECKED CWH
LE APPROVAL SMC
SCALE NO SCALE
E-206-062
DRAWING NUMBER
SHT. NUMBER 4
REV 7

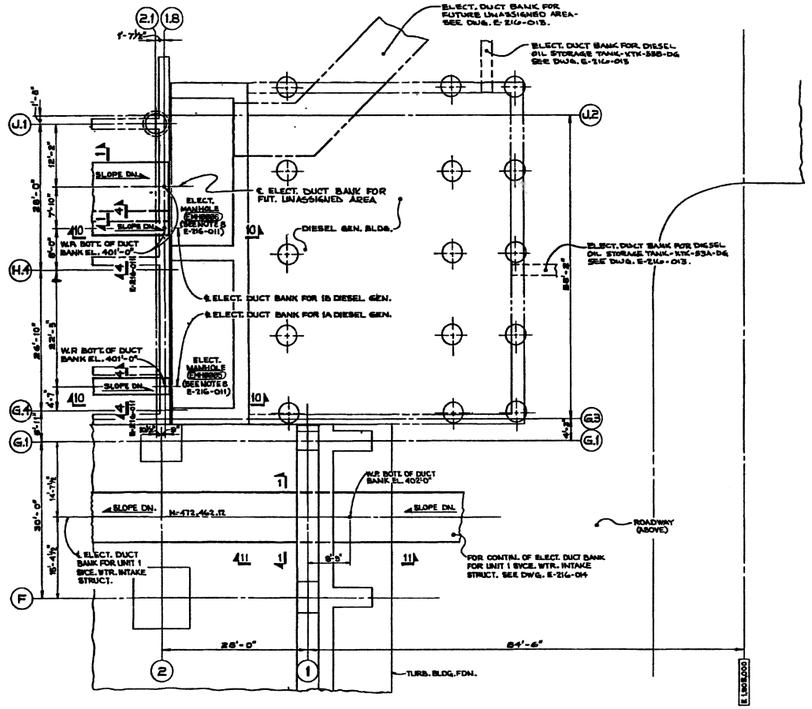

ENLARGED PLAN C

SCALE: 3/8"=1'-0"
(COORD. C-8 (DWG. E-216-011)

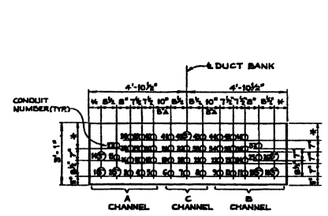

NOTES:
A. ALL CONDUIT 2"ø EXCEPT WHERE NOTED.
B. ✱ SEE NOTE #14 & DWG. E-216-011
C. SEE CONDUIT CHART (SEE BELOW)

SECT. 1-1

SCALE: NONE
(COORDS. B-16 (E-13)
(COORDS. B-12, D-14 & J-14; DWG. E-216-011)
(COORD. B, B-13 & C-16; DWG. E-216-013
(COORD. F-14 DWG. E-216-014)

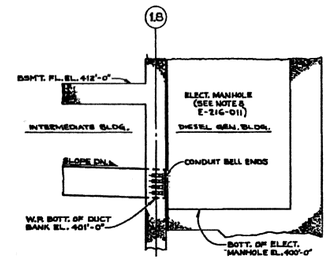

SECT. 10-10

SCALE: 3/8"=1'-0"
(COORDS. B-15 (D-15)

CONDUIT CHART 1

CONDUIT NO.	SIZE		CONDUIT NO.	SIZE	
1	5"		36	3½"	
2	5"		37		
3	3½"		38		
4			39		
5			40		
6			41	"	
7			42	5"	
8			43	3½"	
9			44		
10			45		
11	"		46		
12	5"		47		
13	5"		48		
14	5"		49	"	
15	3½"		50	5"	
16			51	3½"	
17			52		
18			53	"	
19			54	5"	
20			55	3½"	
21			56		
22			57	"	
23			58	5"	
24			59	3½"	
25	"		60		
26	5"		61	"	
27	3½"				
28					
29					
30					
31					
32					
33					
34					
35	"				

SEE BACKFILL DETAIL DWG. E-216-011

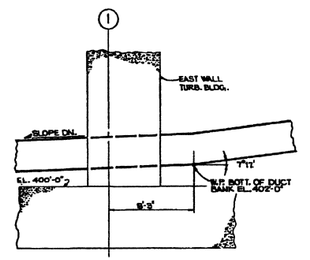

SECT. 11-11

SCALE: 3/8"=1'-0"
(COORD. E-14)

CONDUIT CHART 2

CONDUIT NO.	SIZE		CONDUIT NO.	SIZE	
G2	2"	XXL-6985X			
G3					
G4					
G5					
G6					
G7	"		G2	5"	
G8	5"	EFUN8	G3	"	
70	5"	EFUSA	G4		

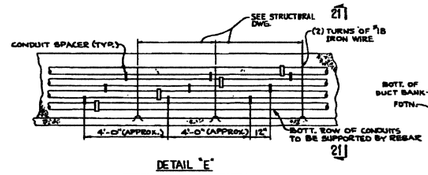

DETAIL "E"

TYPICAL SECTIONAL SIDE VIEW OF CONDUIT DUCT BANK

ARRANGE CONDUIT SPACERS AS SHOWN

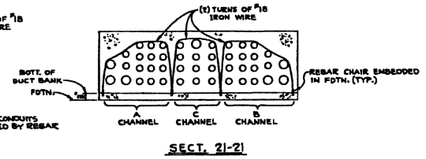

SECT. 21-21

TYPICAL METHOD OF SECURING CONDUIT TO PREVENT LIFT

NO SCALE
(COORD. G-6)

SEE NOTES 9A & 9B (E-216-011)

THIS IS A NUCLEAR SAFETY RELATED DRAWING. NO REVISION SHALL BE MADE TO THIS DRAWING WITHOUT PRIOR ORGANIZATION AND NUCLEAR APPROVAL

REFERENCES:
E-216-011 DUCT RUNS FOR DIESEL GEN. CIRCUITS MAIN PLANT AREA - WEST END

1/4"=1'-0" (0' 5' 10' 15' 20')

NO.	DATE	BY	REVISION	CKD. BY	LE APPROVAL
11	10/25/07	JMR	REVISED PER ECR-70674	MGR	GC
10	9/24/98	DDJ	REVISED PER ECR-70028	MGR	DDJ

RN 07-026
April 2008

FSAR Figure 8.3-2b

SOUTH CAROLINA ELECTRIC & GAS COMPANY

VIRGIL C. SUMMER NUCLEAR STATION

ELECTRICAL

DUCT RUNS FOR DIESEL GENERATOR CIRCUITS

MAIN PLANT AREA - EAST END

DESIGN ENGINEERING

V. C. SUMMER NUCLEAR STATION JENKINSVILLE, S. C.

DRAWN	CHECKED	LE APPROVAL
DDJ	MGR	DDJ

SCALE: NO SCALE

E-216-012 11

DRAWING NUMBER SHT. NUMBER REV

G:\Workarea\OnDesk\38411\256813_888.dgn
p14325 25-OCT-2007 09:44

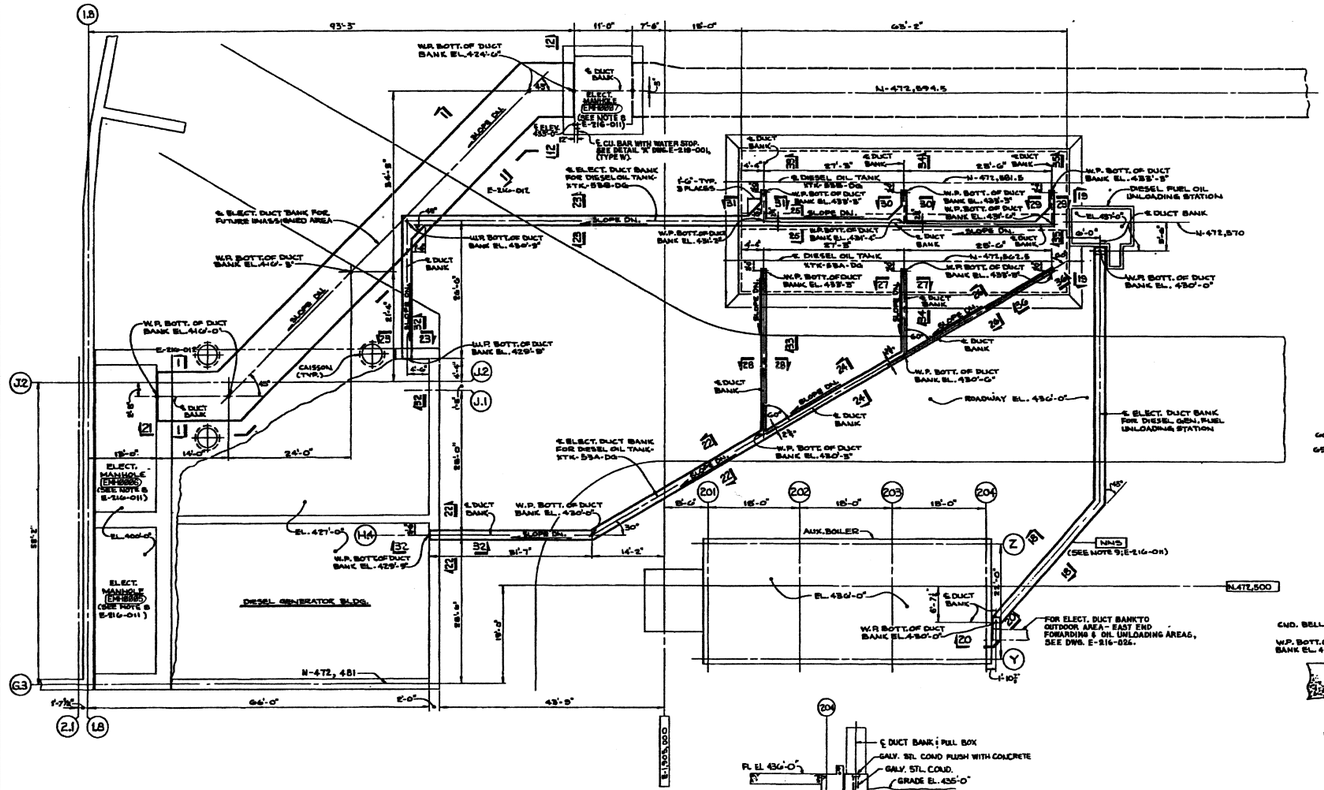

SECT. G-G
SCALE: 1/8"=1'-0"
(CO-ORD. G-10)
ELEC. MANHOLE MH-2
GRADE EL. 431'-0"
SLOPE DN.
CND. BELL ENDS
SLOPE DN.
TOP OF DUCT BANK EL. 418'-11"
INVERT PATH OF DUCT EL. 417'-0"
FOR ELECTRICAL DUCT BANK TO CONDENSATE STORAGE TANK SEE DWG. E-216-015
N-425,055.000
E-216-013
E-216-012
E-216-011
E-216-014
E-216-015
E-216-016
E-216-017
E-216-018
E-216-019
E-216-020
E-216-021
E-216-022
E-216-023
E-216-024
E-216-025
E-216-026
E-216-027
E-216-028
E-216-029
E-216-030
E-216-031
E-216-032
E-216-033
E-216-034
E-216-035
E-216-036
E-216-037
E-216-038
E-216-039
E-216-040
E-216-041
E-216-042
E-216-043
E-216-044
E-216-045
E-216-046
E-216-047
E-216-048
E-216-049
E-216-050
E-216-051
E-216-052
E-216-053

D:\Working\Drawings\3545\E434006_0001.dgn
jr14325
05-NOV-2007 08:29

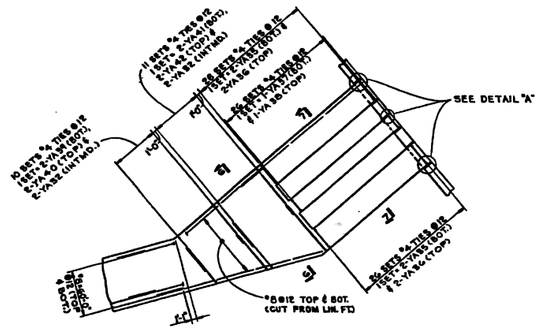

PLAN "B"

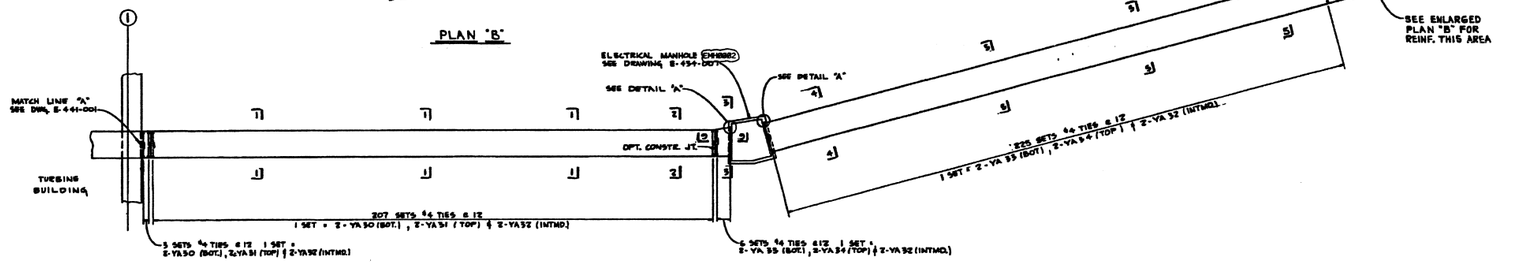

PLAN - ELECTRICAL DUCT BANK

FOR LOCATION OF DUCT BANK SEE DWGS. E-216-012 & E-216-014

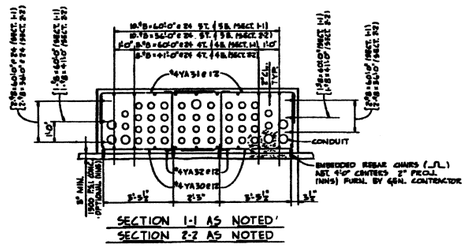

SECTION 1-1 AS NOTED
SECTION 2-2 AS NOTED

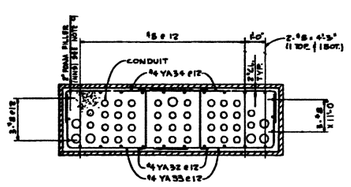

SECTION 3-3



DETAIL "A"

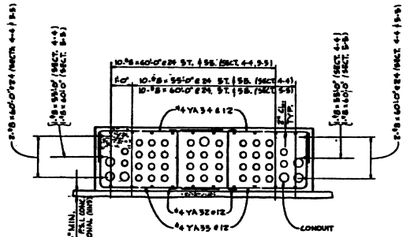

SECTION 4-4 AS NOTED
SECTION 5-5 AS NOTED

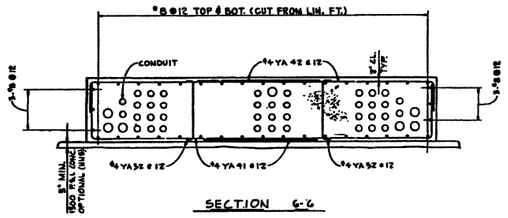

SECTION 6-6

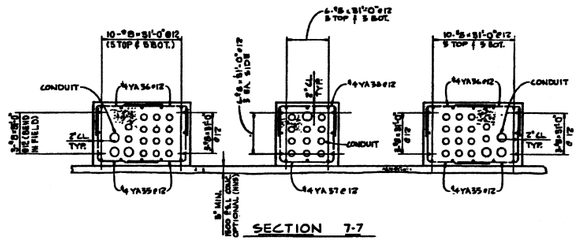

SECTION 7-7

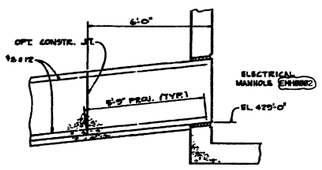

SECTION 8-8

NOTES:-

1. THE CONCRETE USED ON THIS DRAWING IS NUCLEAR SAFETY CLASS (NSC). FOR SAFETY CLASS DESIGNATIONS OF ENCLOSED ITEMS SEE REFERENCED DRAWINGS. FOR ITEMS WHICH ARE NON-NUCLEAR SAFETY (NNS), SPECIFICATION 795-4405-00 IS NOT APPLICABLE.
2. QUALITY ASSURANCE PROGRAM REQUIREMENTS QA-1. USE GAI SPECIFICATION QUALITY ASSURANCE PROGRAM REQUIREMENTS SP-795-4401-00.
3. STRUCTURAL CONCRETE TO BE IN ACCORDANCE WITH GAI SPECIFICATION, STRUCTURAL CONCRETE SP-795-4402-00.
4. STRUCTURAL CONCRETE TO HAVE A MINIMUM COMPRESSIVE STRENGTH OF 3000 PSI IN 28 DAYS.
5. PLACING OF REINFORCING STEEL TO BE IN ACCORDANCE WITH GAI SPECIFICATION PLACING OF REINFORCING STEEL SP-4202-4403-00.
6. FABRICATION OF REINFORCING BARS TO BE IN ACCORDANCE WITH GAI SPECIFICATION FABRICATION AND DELIVERY OF REINFORCING STEEL SP-4204-4403-00.
7. THE MINIMUM LAP SPLICE FOR ALL REINFORCEMENT BARS TO BE 0'-0" FOR #3 AND 1'-0" FOR #4.
8. THIS DRAWING TO BE READ IN CONJUNCTION WITH ELECTRICAL DRAWING E-216-012 AND E-216-014.
9. FOAM FILLER TO BE "SERVICISED CLOSED CELL PLASTIC FOAM FILLER" BY GRACE CONSTRUCTION MATERIALS COMPANY OR EQUAL.
10. CONSTRUCTION JOINTS MAY BE LOCATED BY THE FIELD AS REQUIRED.

REFERENCES:-

E-434-007	MISCELLANEOUS OUTDOOR STRUCTURES – ELECTRICAL MANHOLE EMH8B2 – REINFORCING DETAILS
E-441-001	ELECTRICAL DUCT BANKS – CONTROL COMPLEX, INTERMEDIATE BUILDING AND TURBINE BUILDING
E-216-012	ELECTRICAL – DUCT BANK FOR DIESEL GENERATOR CIRCUITS – MAIN PLANT AREA EAST END
E-216-014	ELECTRICAL – DUCT BANK FOR DIESEL GENERATOR CIRCUITS TO SERVICE WATER INTAKE STRUCTURE
E-434-026	REINFORCEMENT LIST
E-434-032	REINFORCEMENT LIST

THIS IS A
NUCLEAR SAFETY RELATED
DOCUMENT. NO DEVIATION SHALL BE INITIATED OR PERFORMED WITHOUT PRIOR DOCUMENTATION AND WRITTEN APPROVAL

RN 07-026
April 2008

NO.	DATE	BY	REVISION	CKD. BY	LE APPROVAL
4	11/5/07	JMR	REVISED PER ECR-70674	MGR	GC
3	9/26/07	DDJ	REVISED PER ECR-70028	MGR	DDJ

FSAR Figure 8.3-2e

SOUTH CAROLINA ELECTRIC & GAS COMPANY

VIRGIL C. SUMMER NUCLEAR STATION

MISCELLANEOUS OUTDOOR STRUCTURES

YARD DUCT RUN - TURBINE BUILDING

TO SERVICE WATER INTAKE STRUCTURE

DESIGN ENGINEERING

A BGE&E COMPANY — V. C. SUMMER NUCLEAR STATION JENKINSVILLE, S. C.

MADE	CHECKED	LE APPROVAL
1. DDJ	2. MGR	3. DDJ

SCALE: 1/4"=1'-0" — DRAWING NUMBER: E-434-006 — SHT. NUMBER: 4 — REV.

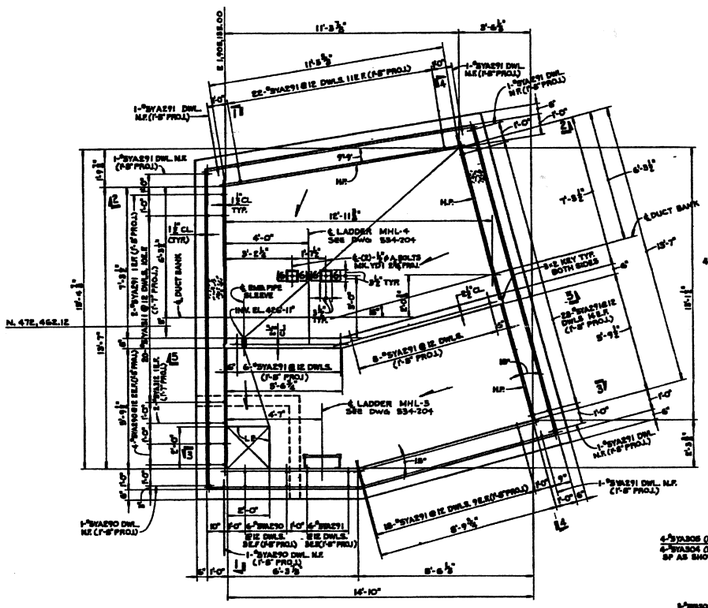

SECTIONAL PLAN - DOWEL PLACEMENT
ELECTRICAL MANHOLE (EMH0002)
FOR MANHOLE LOCATION SEE DWG. E-216-014

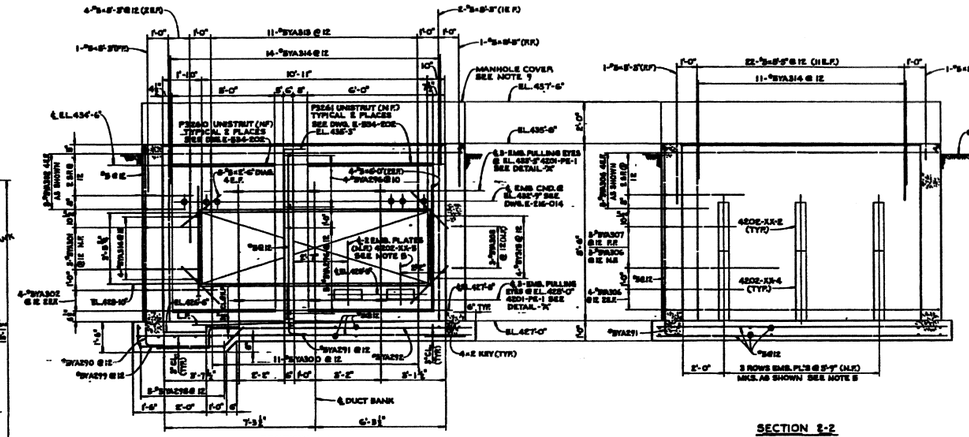

SECTION 1-1

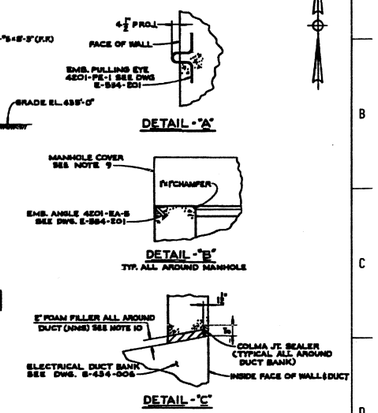

SECTION 2-2

DETAIL - "A"

DETAIL - "B"
TYP. ALL AROUND MANHOLE

DETAIL - "C"

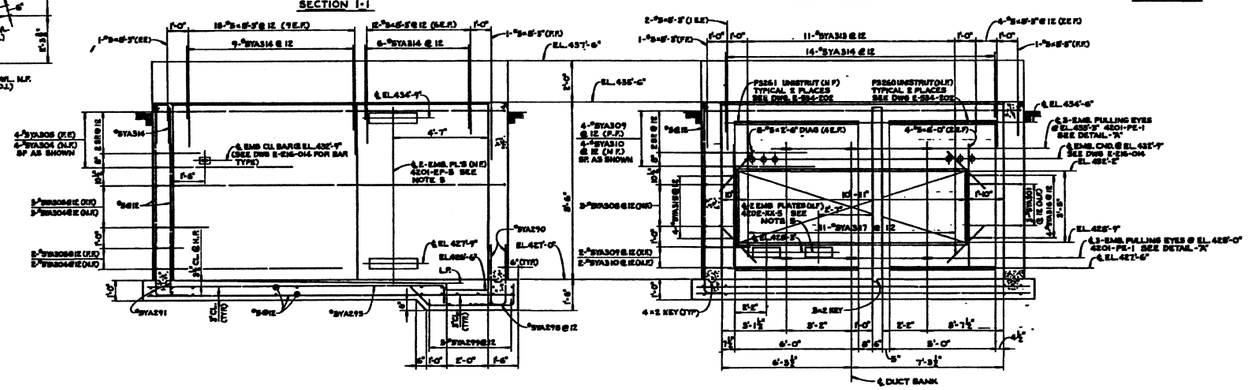

SECTION 3-3

SECTION 4-4

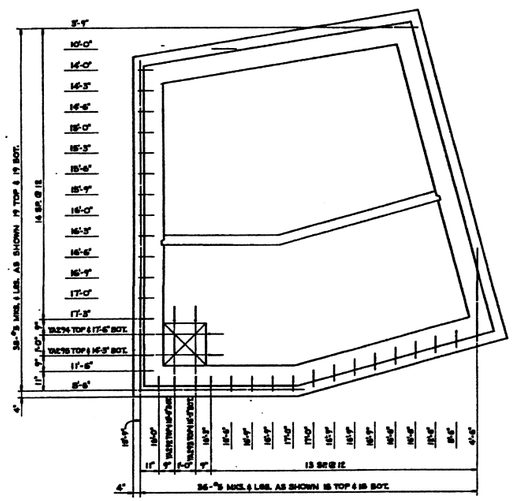

SLAB PLAN

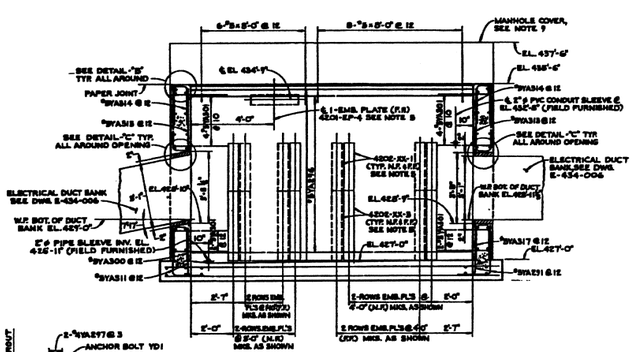

SECTION 5-5

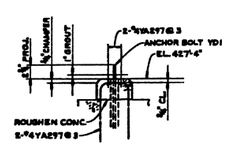

SECTION 6-6
TYPICAL 2 PLACES

NOTES:-

1. THE CONCRETE WORK ON THIS DRAWING IS NUCLEAR SAFETY CLASS (NSC). FOR SAFETY CLASS DESIGNATIONS OF ENGINEERED ITEMS, SEE REFERENCED DRAWINGS. FOR ITEMS WHICH ARE NON-NUCLEAR SAFETY (NNS), SPECIFICATION 701-4401-00 IS NOT APPLICABLE.
2. QUALITY ASSURANCE PROGRAM REQUIREMENTS QA-1. SEE QA1 SPECIFICATION QUALITY ASSURANCE PROGRAM REQUIREMENTS SP-701-4401-00.
3. STRUCTURAL CONCRETE TO BE IN ACCORDANCE WITH QA1 SPECIFICATION, STRUCTURAL CONCRETE SP-201-4401-00.
4. STRUCTURAL CONCRETE TO HAVE A MINIMUM COMPRESSIVE STRENGTH OF 3000 PSI IN 28 DAYS.
5. ALL ENGINEERED PLATES AND SUBSTRUTS TO BE MOUNTED FLUSH WITH FACE OF WALL (N.F. AND/OR F.F.), UNLESS OTHERWISE NOTED. FOR ENGINEERED PLATE AND SUBSTRUT DETAILS, SEE DRAWINGS E-234-201 AND E-234-202.
6. PLACING TOLERANCES ON ENGINEERED PLATES AND SUBSTRUTS TO BE ±1" UNLESS OTHERWISE NOTED.
7. PLACING OF REINFORCING STEEL TO BE IN ACCORDANCE WITH QA1 SPECIFICATION, PLACING OF REINFORCING STEEL SP-201-4401-00.
8. FABRICATION OF REINFORCING BARS TO BE IN ACCORDANCE WITH QA1 SPECIFICATION, FABRICATION AND DELIVERY OF REINFORCING STEEL SP-204-4401-00.
9. MANHOLE COVER TO BE CAST IN PLACE, REMOVED, AND INSTALLED AFTER GASKET HAVE BEEN PULLED, SEE DRAWING E-434-014.
10. FOAM FILLER TO BE "DEXPOSITION CLOSED CELL PLASTIC FOAM FILLER" BY GRADE CONSTRUCTION MATERIALS COMPANY OR EQUAL.
11. N.F. INDICATED IS SIGN POINT OF FLOOR EL. 427'-0", UNLESS NOTED OTHERWISE.
12. L.F. INDICATED IS LOW POINT OF FLOOR EL. 426'-10", UNLESS NOTED OTHERWISE.

REFERENCES:-

E-216-014	ELECTRICAL - DUCT BANK FOR DIESEL GENERATOR GIRDERS TO SERVICE WATER INTAKE STRUCTURE
E-434-006	MISCELLANEOUS OUTDOOR STRUCTURES - YARD DUCT RUN - DRAWING BUILDING TO SERVICE INTAKE STRUCTURE
E-434-014	MISCELLANEOUS OUTDOOR STRUCTURES - YARD DUCT RUN - COVERS - ELECTRICAL MANHOLES (EMH0002 AND EMH0007)
E-234-201	MISCELLANEOUS OUTDOOR STRUCTURES - MISCELLANEOUS STEEL - ENGINEER STEEL DETAILS
E-234-202	MISCELLANEOUS OUTDOOR STRUCTURES - MISCELLANEOUS STEEL - ENGINEER STEEL DETAILS
E-234-206	REINFORCEMENT LIST
E-234-207	REINFORCEMENT LIST
E-223-123	ANCHOR BOLT LIST

THIS IS A
NUCLEAR SAFETY RELATED
DOCUMENT. NO DEVIATION SHALL BE
INITIATED OR PERFORMED WITHOUT PRIOR
DOCUMENTATION AND WRITTEN APPROVAL

RN 07-026
April 2008

NO.	DATE	BY	REVISION	CKD. BY	LE APPROVAL
4	11/5/07	JMR	REVISED PER ECR-70674	MGR	GC
3	9/26/08	DDJ	REVISED PER ECR-70028	MGR	DDJ

FSAR Figure 8.3-2f

SOUTH CAROLINA ELECTRIC & GAS COMPANY

VIRGIL C. SUMMER NUCLEAR STATION

MISCELLANEOUS OUTDOOR STRUCTURES

YARD DUCT RUN

ELECTRICAL MANHOLE (EMH0002)

DESIGN ENGINEERING

V. C. SUMMER NUCLEAR STATION JENKINSVILLE, S.C.

MADE	CHECKED	LE APPROVAL
1. DDJ	2. MGR	3. DDJ

SCALE NO SCALE — DRAWING NUMBER E-434-007 — SHT. NUMBER — REV 4

######DGNSPEC#########################
##USERNAME## ######SYTIME######

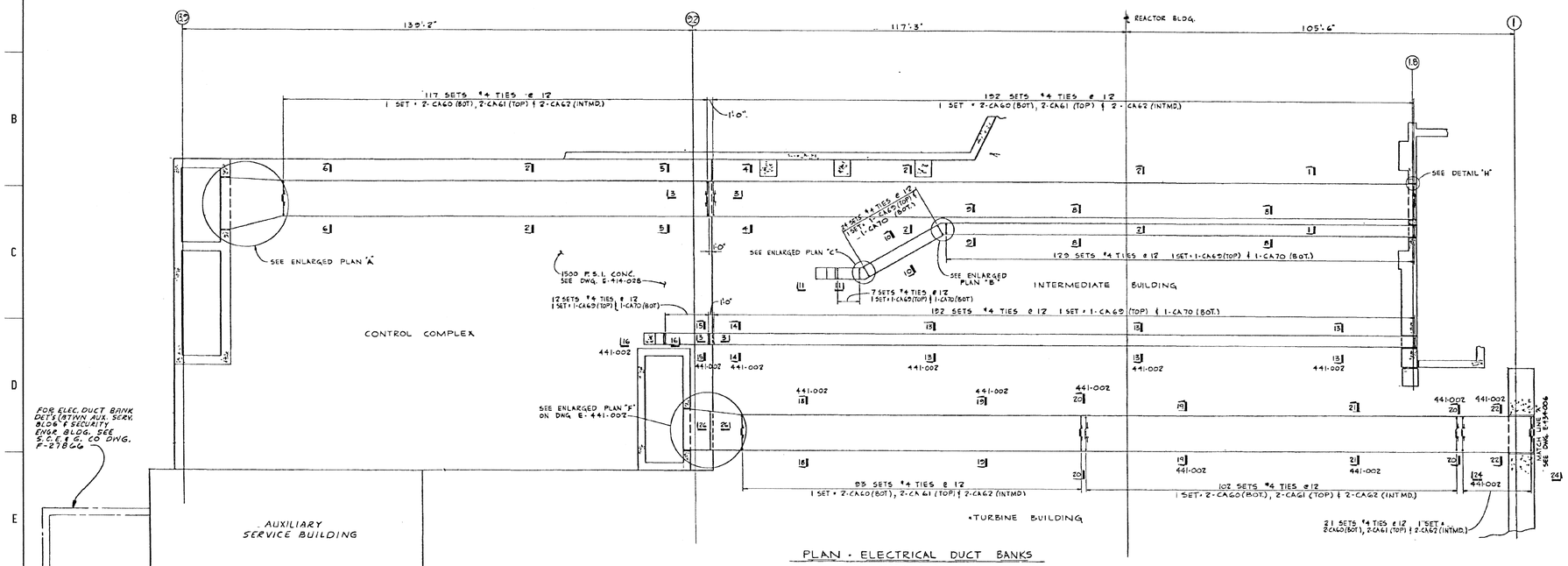

PLAN - ELECTRICAL DUCT BANKS

FOR LOCATION OF DUCT BANKS SEE DWGS 216-011 & 216-012

DUCT BANK REINFORCING		
SECTION	a	b
1-1	#8 x 60'-0"	#8 x 55'-0"
2-2	#8 x 60'-0"	——
4-4	#9 x 25'-0"	#9 x 30'-0"
5-5	#9 x 31'-5"	#9 x 26'-3"
6-6	#8 x 55'-0"	#8 x 60'-0"
8-8	#8 x 60'-0"	——
9-9	#8 CA 72	#8 x 23'-0"
10-10	#8 CA 73	#8 CA 74
13-13	#8 x 60'-0"	——
14-14	#9 x 25'-0"	——
15-15	#9 x 20'-6"	——
16-16	#8 x 60'-0"	#8 x 60'-0"
20-20	#8 x 15'-9"	#8 x 15'-9"
21-21	#8 x 42'-6"	#8 x 42'-6"
22-22	#8 CA 77	#8 CA 78

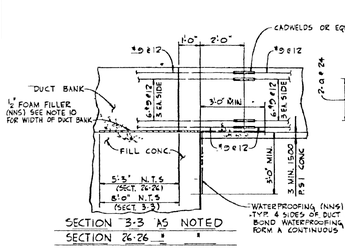

SECTION 3-3 AS NOTED
SECTION 26-26 " "

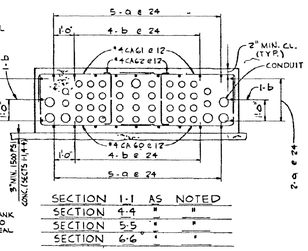

SECTION 1-1 AS NOTED
SECTION 4-4 " "
SECTION 5-5 " "
SECTION 6-6 " "

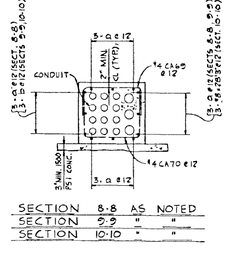

SECTION 8-8 AS NOTED
SECTION 9-9 " "
SECTION 10-10 " "

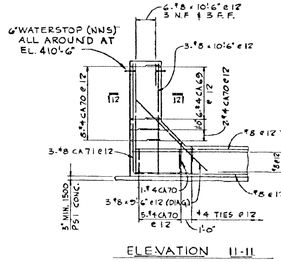

ELEVATION 11-11

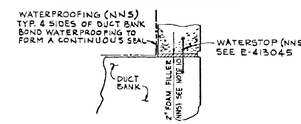

DETAIL "H"

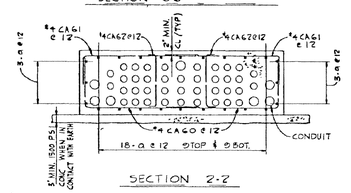

SECTION 2-2

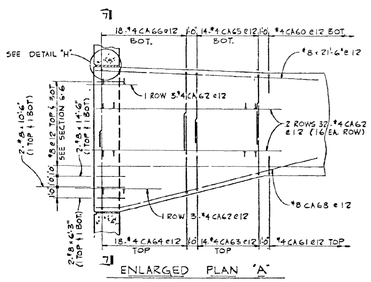

ENLARGED PLAN "A"

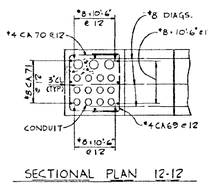

SECTIONAL PLAN 12-12

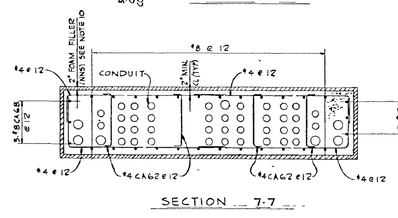

SECTION 7-7

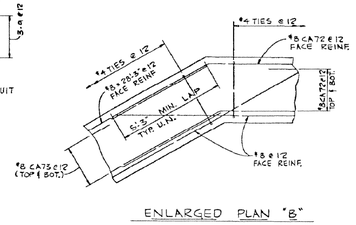

ENLARGED PLAN "B"

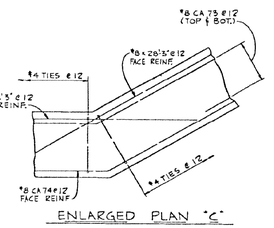

ENLARGED PLAN "C"

NOTES:
1. THE CONCRETE WORK ON THIS DRAWING IS NUCLEAR SAFETY CLASS (NSC). FOR SAFETY CLASS DESIGNATIONS OF ENNOCED ITEMS SEE REFERENCED DRAWINGS. FOR ITEMS WHICH ARE NON-NUCLEAR SAFETY (NNS), SPECIFICATION 7Q1-4461-80 IS NOT APPLICABLE.
2. QUALITY ASSURANCE PROGRAM REQUIREMENTS QA-1. SEE GAI SPECIFICATION QUALITY ASSURANCE PROGRAM REQUIREMENTS SP-7Q1-4461-80.
3. STRUCTURAL CONCRETE TO BE IN ACCORDANCE WITH GAI SPECIFICATION, STRUCTURAL CONCRETE SP-201-4461-80.
4. STRUCTURAL CONCRETE TO HAVE A MINIMUM COMPRESSIVE STRENGTH OF 3000 PSI IN 28 DAYS.
5. PLACING OF REINFORCING STEEL TO BE IN ACCORDANCE WITH GAI SPECIFICATION PLACING OF REINFORCING STEEL SP-202-4461-80.
6. FABRICATION OF REINFORCING BARS TO BE IN ACCORDANCE WITH GAI SPECIFICATION FABRICATION AND DELIVERY OF REINFORCING STEEL SP-504-4461-80.
7. THE MINIMUM LAP SPLICE FOR ALL REINFORCEMENT BARS TO BE 51'-3".
8. THIS DRAWING TO BE WORKED IN CONJUNCTION WITH ELECTRICAL DRAWINGS E-216-011 & E-216-012.
9. CADWELD, OR EQUAL, SPLICES SHALL CONFORM TO SECTIONS 1:08.4 AND 1:08.5 OF GAI SPECIFICATION, PLACING OF REINFORCING STEEL SP-202-4461-80.
10. FOAM FILLER TO BE "SERVICISED CLOSED CELL PLASTIC FOAM FILLER" BY GRACE CONSTRUCTION MATERIALS COMPANY OR EQUAL.
11. CONSTRUCTION JOINTS MAY BE LOCATED BY THE FIELD AS REQUIRED.

REFERENCES:

E-441-002	ELECTRICAL DUCT BANKS - CONTROL COMPLEX, INTERMEDIATE BUILDING & TURBINE BUILDING
E-216-011	ELECTRICAL - DUCT RUNS FOR DIESEL GENERATOR CIRCUITS - MAIN PLANT AREA WEST END
E-216-012	ELECTRICAL - DUCT RUNS FOR DIESEL GENERATOR CIRCUITS - MAIN PLANT AREA EAST END
S-424-341	REINFORCEMENT LIST
S-424-391	REINFORCEMENT LIST
S-424-392	REINFORCEMENT LIST
S-424-546	REINFORCEMENT LIST

1/4"=1'-0" (0', 5', 10', 15', 20')

THIS IS A NUCLEAR SAFETY RELATED DOCUMENT. NO DEVIATION SHALL BE INITIATED OR PERFORMED WITHOUT PRIOR DOCUMENTATION AND WRITTEN APPROVAL

FSAR Figure 8.3-2g

Amendment 02-01
May 2002

NO.	DATE	BY	REVISION	CHD. BY	APPROVAL
7	9/26/00	DDJ	REVISED PER ECR-73829	MGR	DDJ

SOUTH CAROLINA ELECTRIC & GAS COMPANY
VIRGIL C. SUMMER NUCLEAR STATION
ELECTRICAL DUCT BANKS
CONTROL COMPLEX, INTERMEDIATE BUILDING & TURBINE BUILDING
DESIGN ENGINEERING
A SUBSIDIARY OF S.C. GUPTA NUCLEAR STATION JOHNSONVILLE, S.C.

DESIGNED	DRAWN	CHECKED	APPROVED
DDJ	MGR	DDJ	

DRAWING NUMBER: E-441-001 7

441001_0001.m DJ149598 Wednesday September 26 2001 09:49:28 AM EDT

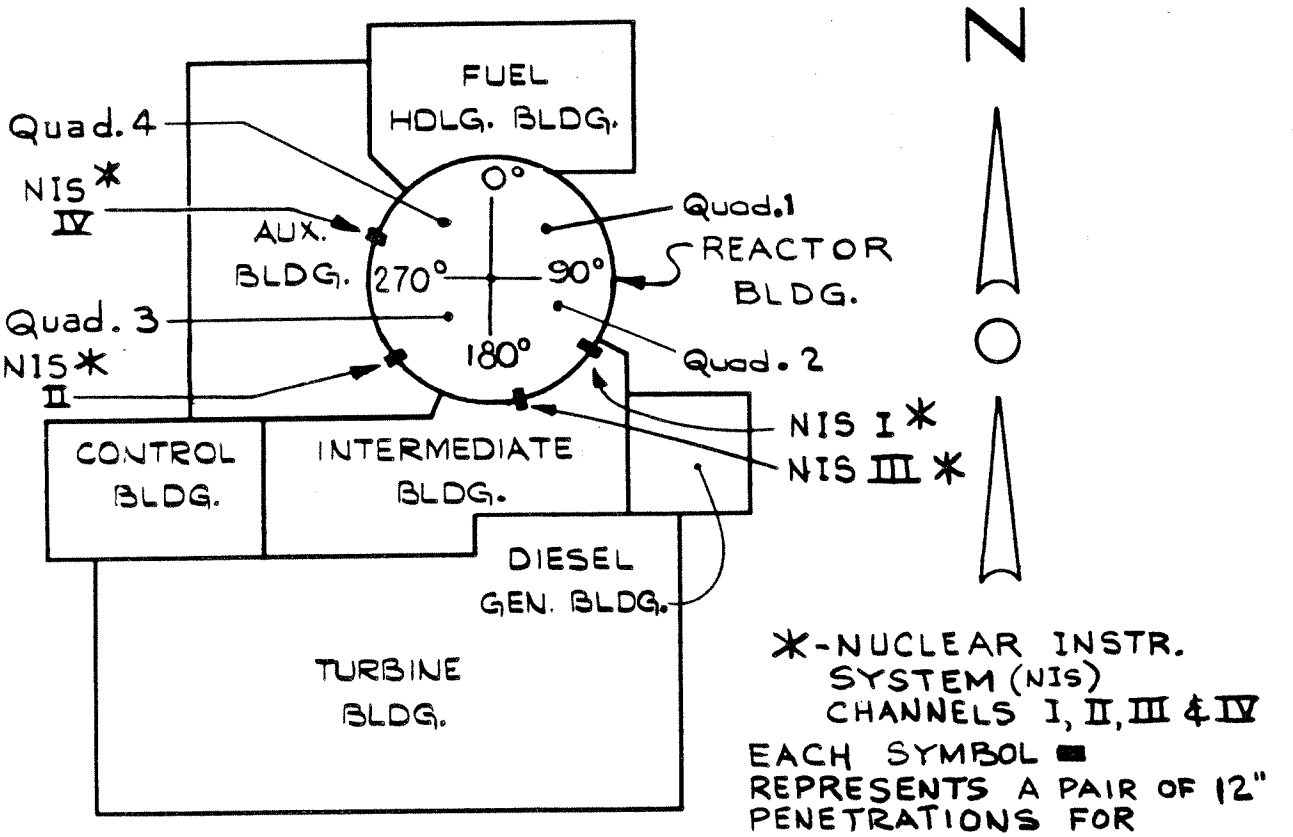

SEPARATION CRITERIA (DISTANCES ARE CENTER LINE TO CENTER LINE)

ABOVE MEZZANINE ELEVATION 436'-0".

A 4'-0" HORIZONTAL AND VERTICAL SPACING MAY BE USED BETWEEN ANY 2 ADJACENT PENETRATIONS IF THE COMBINED RADII OF THE PENETRATIONS DO NOT EXCEED 18".

IF A MINIMUM OF 18" CANNOT BE USED THEN THE SPACINGS MUST GO TO AT LEAST 8'-0".

BELOW MEZZANINE ELEVATION 436'-0".

VERTICAL SPACINGS - SAME AS ABOVE.

HORIZONTAL SPACINGS - SAME AS ABOVE - EXCEPT THAT THE COMBINED RADII OF THE PENETRATIONS MUST NOT EXCEED 10".

IF A MINIMUM OF 10" CANNOT BE USED THEN THE SPACINGS MUST GO TO 8'-0".

SOUTH CAROLINA ELECTRIC & GAS CO. VIRGIL C. SUMMER NUCLEAR STATION
Containment Penetration Separation
Figure 8.3-3

480V MOTOR CONTROL CENTER XMC1B4X-ES UNIT 2AB

100 AF 100 AT

2/C-1

375KVA 480-120V 1Ø, VITAL SYSTEM TRANSF. IFX XTF1FX-EM

2-#4/0-750MCM

120VAC. INST. MAIN DIST. PANEL IFX APN1FX-EM, CB-M

400A BUS

480V MOTOR CONTROL CENTER XMC1D2Y-ES UNIT 1ØEI

2-#4/0-500MCM

125V D.C. MAIN DIST. PANEL 1HX DPN1HX-ED (SEE NOTES 4, 6 & 16) B-B

1600A BUS

2688AH 125V BATTERY 1X XBAT-ED

1-3/C-500MCM POSITIVE
1-3/C-500MCM NEGATIVE

1500A 100MV NEW SHUNT DPN1HX

1500A 150MV SHUNT DPN1HX

REMOTE ALM. BATTERY CHARGER TROUBLE XCP6116

12-5400 MFD

BATTERY CHARGER 1X-2X XBC1X-2X-ED (IMS-37-013)

125V D.C. TEST PANEL DPN2X-ED TB-B

1-3/C-350MCM POS.
1-3/C-350MCM NEG.

TO COORD. H-6 THIS DWG.

FEEDWATER PUMP A SHP TPP0022A-FN

FEEDWATER PUMP B SHP TPP0022B-FN

FEEDWATER PUMP C SHP TPP0022C-FN

TURBINE EMERG. SEAL OIL PUMP 15HP XTP0001-SO

MAIN TURBINE EHOP 125 H.P. XOR0001

SPACE

FOR 480V MOTOR CONTROL CENTER XMC1D2X-ES UNIT 6EI

BATTERY CHARGER 1X-2X XBC1X-2X-ED (IMS-37-013)

FUTURE UNIT #2

REMOTE ALARM "BATTERY CHARGER TROUBLE" XCP6116

FUTURE UNIT 2 125 V MAIN DIST PNL. 2HX NO. DPN 2 HX-ED

2-2/C-500MCM

SPARE

BKRS. 1 TO 4 225AF SPACES

BKRS. 5 TO 20 100AF SPACES

SPARE

SPARE

SPARE

TO 1ØKVA VITAL BUS UPS ALTERNATE SOURCE E-206-Ø61, SHT. 3 IC-13

SPARE

SPARE

SPARE

TO 1ØKVA VITAL BUS UPS ALTERNATE SOURCE E-206-Ø61, SHT. 3 IC-12

ENERG. FEEDWATER TURBINE DRIVEN PUMP TPP0008-EF

TURBINE GENERATOR BEARING & PROTECTION PNL. XPN0017-FS

SPARE

SPACE

SPACE

SPACE

SPACE

SPARE

POSITION IND. ALARM

18KVA PLANT INVERTER NO. 6 XIT1P18E-EV (IMS-37-Ø18)

FM

V 0-150VAC

AM 0-100A

M

150A

100AT

98AT

STATIC S.W.

MANUAL SW.

POSITION IND. ALARM

120V AC. VITAL INST. PNL. Nº6 APN5906-EV, CB-M

225AF 200A BUS

ALL BREAKERS 100AF

2/C-1/0

SPARE

SPARE

SPARE

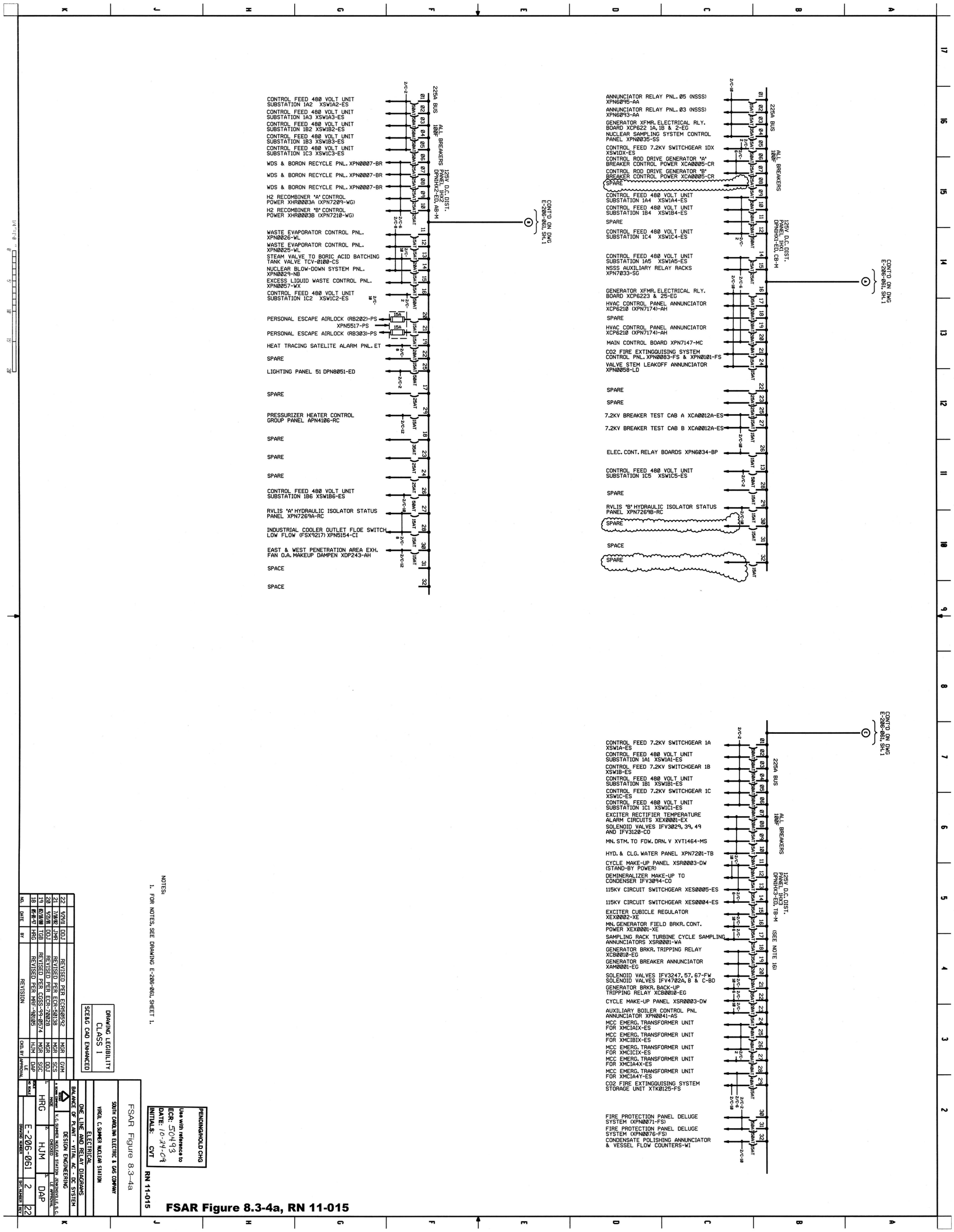

NOTES:

1. FOR NOTES SEE DRAWING E-206-061, SHEET 1.

PENDING/HOLD CHG
Use with reference to
ECR: 50493
DATE: 10-24-04
INITIALS: CVT
RN 11-015

FSAR Figure 8.3-4a

SOUTH CAROLINA ELECTRIC & GAS COMPANY

VIRGIL C. SUMMER NUCLEAR STATION

ELECTRICAL

ONE LINE AND RELAY DIAGRAMS

BALANCE OF PLANT - VITAL AC - DC SYSTEM

DESIGN ENGINEERING

V. C. SUMMER NUCLEAR STATION JENKINSVILLE, S. C.

DRAWN	CHECKED	LE APPROVAL
HRG	HJM	DAP

E-206-061 | 2 | 22

DRAWING NUMBER | SH. NUMBER | REV.

DRAWING LEGIBILITY CLASS 1

SCE&G CAD ENHANCED

NO.	DATE	BY	REVISION	CKD BY	LE APPROVAL
22	9/20/01	DDJ	REVISED PER ECR60592	MGR	GVM
21	1/30/02	JMR	REVISED PER ECR-50138	MGR	SCS
20	9/20/04	DDJ	REVISED PER ECR-70028	MGR	DDJ
19	02/10/05	TGB	REVISED PER CCSS-99-0574	MGR	SGC
18	05-8-07	HRG	REVISED PER MRF-90105	HJM	DAP

FSAR Figure 8.3-4a, RN 11-015

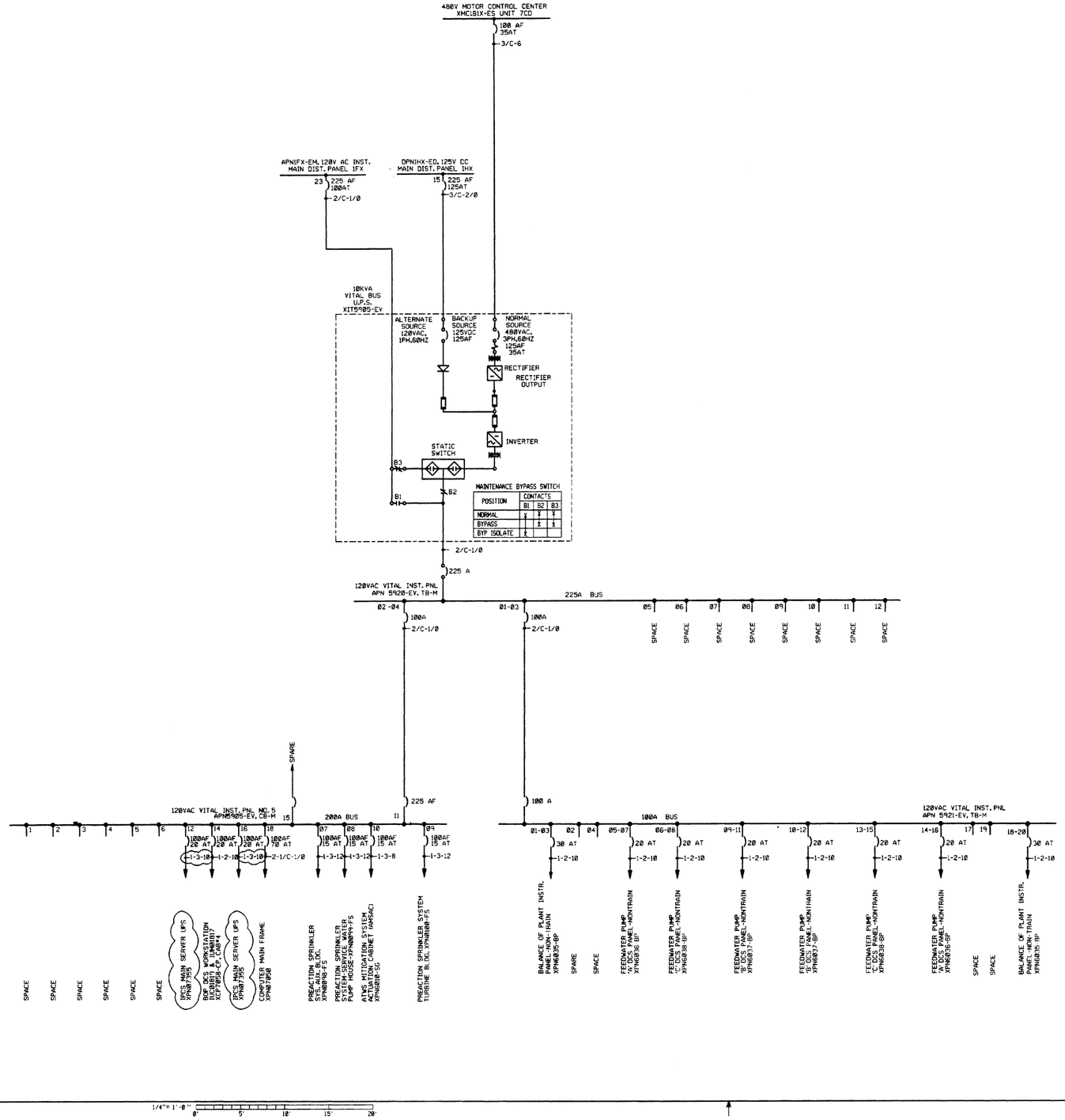

RN 06-011
August 2007

DRAWING LEGIBILITY
CLASS 1
SCE&G CAD ENHANCED

NO.	DATE	BY	REVISION	CHK. BY	APPROVAL
4	9/07/6	RJB	REVISED PER ECR-50938	MGR	MM
3	9/9/05	RHM	REVISED PER ECR-50092	MGR	T.L.W.
2	9/9/05	RHM	REVISED PER ECR-50091	MGR	G.R.
1	5/9/01	TGD	ISSUED PER ECR-50089	MGR	MCL
0	5/9/01	DDJ	ISSUED PER ECR-50089	MGR	MCL

FSAR Figure 8.3-4b

SOUTH CAROLINA ELECTRIC & GAS COMPANY

VIRGIL C. SUMMER NUCLEAR STATION

ELECTRICAL

ONE LINE AND RELAY DIAGRAMS

BALANCE OF PLANT-VITAL AC-DC SYSTEM

DESIGN ENGINEERING

V. C. SUMMER NUCLEAR STATION, ADDENDUM 2, S.C.

DESIGNED D.D.J. | DRAWN M.G.R. | CHECKED T.L.W.

DRAWING NUMBER E-206-061 | SHEET 3 | REV. NO. 4

206061 0003.m Printed by RB41103 Monday November 07 2005 01:27:01 PM EST

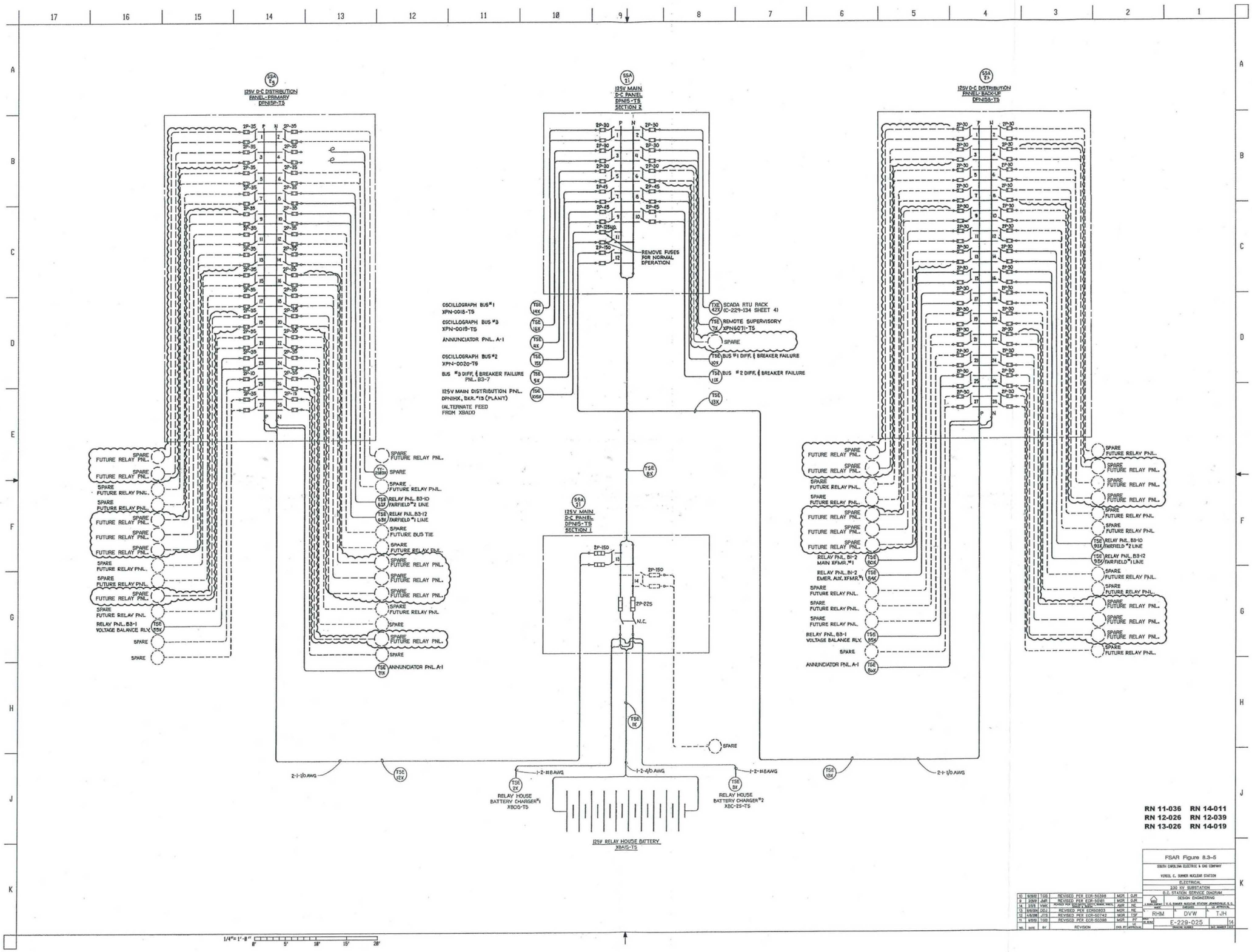

RN 11-036 RN 14-011
RN 12-026 RN 12-039
RN 13-026 RN 14-019

FSAR Figure 8.3-5

SOUTH CAROLINA ELECTRIC & GAS COMPANY

V.C. SUMMER NUCLEAR STATION

ELECTRICAL

230 KV SUBSTATION

D.C. STATION SERVICE DIAGRAM

DESIGN ENGINEERING

NO.	DATE	BY	REVISION	ENG. BY	APPROVAL
10	6/98	TGB	REVISED PER ECR-50388	MGR	GJR
9	2/98	JMR	REVISED PER ECR-50181	MGR	GJR
14	3/95	VMC	REVISED PER ECR-50181 (REVISED SPARE & RELAY PANEL NAMES, REMOVED & ADDED FUSES)	ASM	NE
13	8/93	DDJ	REVISED PER ECR0803	MGR	NE
12	4/93	JTS	REVISED PER ECR-50142	MGR	TSF
11	6/92	TGB	REVISED PER ECR-50388	MGR	PF

DRAWN: RHM | CHECKED: DVW | APPROVAL: TJH

DRAWING NUMBER: E-229-025 | REV. NUMBER: 14

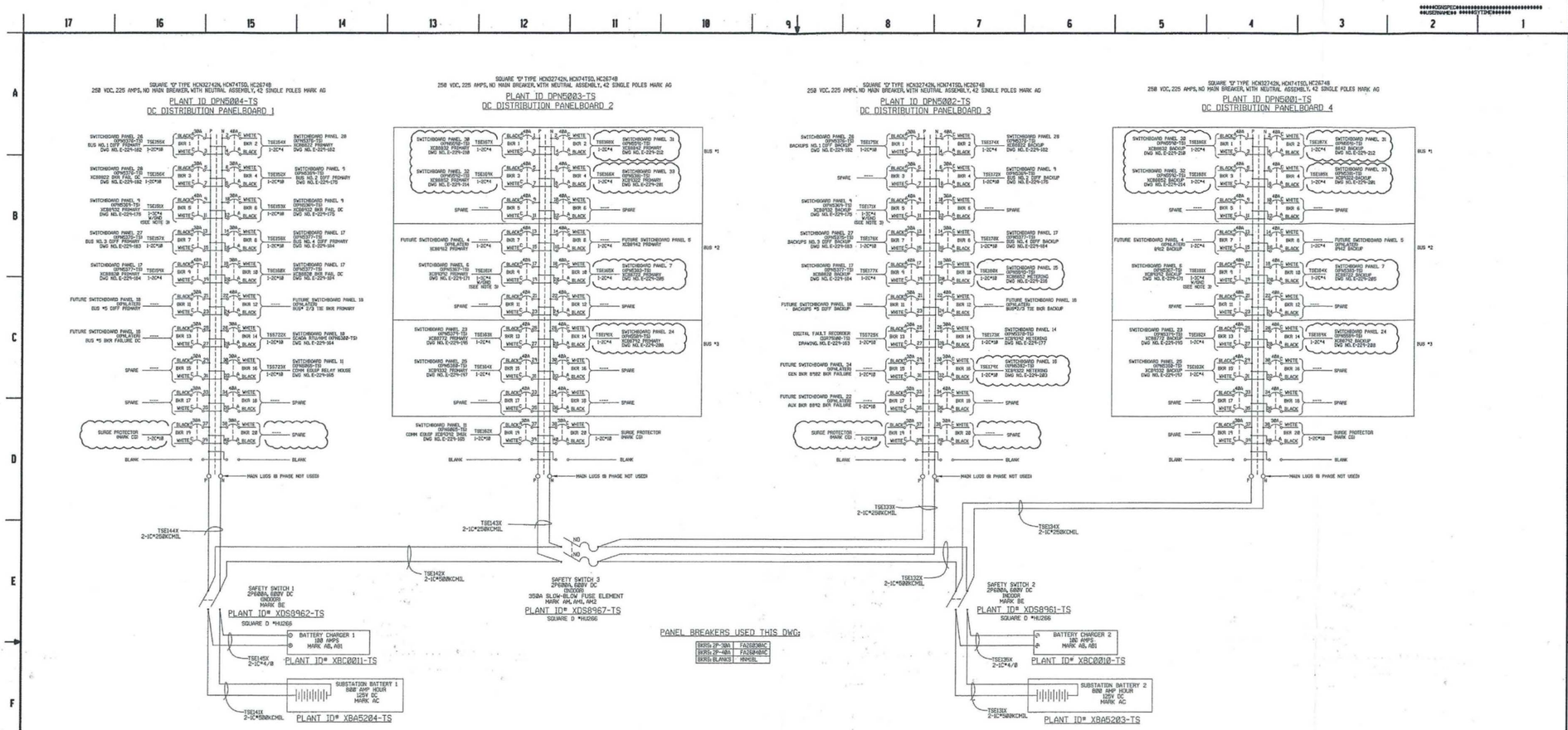

DC DISTRIBUTION PANELBOARD NO.1
LOAD SCHEDULE

CIRCUIT DESCRIPTION	P	N	
SWITCHBOARD PANEL 28 (XPN5376-TS)			BKR 1
BUS NO.1 DIFFERENTIAL PRIMARY	5.5		
SWITCHBOARD PANEL 29 (XPN5379-TS)			BKR 3
BUS NO.1 XCB5802 BREAKER FAILURE DC	8.2		
SWITCHBOARD PANEL 9 (XPN5309-TS)			BKR 5
XCB5122 PRIMARY	14.4		
SWITCHBOARD PANEL 27 (XPN5375-TS)			BKR 7
BUS NO.3 DIFFERENTIAL PRIMARY	5.5		
SWITCHBOARD PANEL 17 (XPN5377-TS)			BKR 9
XCB5832B PRIMARY	14.4		
FUTURE SWITCHBOARD PANEL 18			BKR 11
BUS 5 DIFFERENTIAL PRIMARY	5.5		
FUTURE SWITCHBOARD PANEL 35			BKR 13
BUS 5 BREAKER FAILURE DC	8.2		
SPARE			BKR 15
SPARE			BKR 17
SURGE PROTECTOR DWARK CO			BKR 19
BLANK			
TOTALS	43.7	0.0	

CIRCUIT DESCRIPTION	P	N	
SWITCHBOARD PANEL 28 (XPN5376-TS)			BKR 2
XCB5822 PRIMARY	14.4		
SWITCHBOARD PANEL 9 (XPN5309-TS)			BKR 4
BUS NO.2 DIFFERENTIAL PRIMARY	5.5		
SWITCHBOARD PANEL 9 (XPN5309-TS)			BKR 6
XCB5122 BREAKER FAILURE DC	8.2		
SWITCHBOARD PANEL 17 (XPN5377-TS)			BKR 8
BUS NO.4 DIFFERENTIAL PRIMARY	5.5		
SWITCHBOARD PANEL 17 (XPN5377-TS)			BKR 10
BUS NO.4 BREAKER FAILURE DC	8.2		
FUTURE SWITCHBOARD PANEL 18			BKR 12
BUS 2/3 TIE BKR PRIMARY	14.4		
SPARE			BKR 14
SPARE			BKR 16
SPARE			BKR 18
SPARE			BKR 20
BLANK			
TOTALS	43.3	0.0	

TOTAL=44.0

DC DISTRIBUTION PANELBOARD NO.2
LOAD SCHEDULE

CIRCUIT DESCRIPTION	P	N	
SWITCHBOARD PANEL 38 (XPN5392-TS)			BKR 1
XCB5122 PRIMARY	14.1		
SWITCHBOARD PANEL 32 (XPN5392-TS)			BKR 3
XCB5832A PRIMARY	14.5		
SPARE			BKR 5
FUTURE SWITCHBOARD PANEL 4			BKR 7
XCB5902 PRIMARY	14.1		
SWITCHBOARD PANEL 6 (XPN5367-TS)			BKR 9
XCB5712 PRIMARY	14.5		
SPARE			BKR 11
SWITCHBOARD PANEL 23 (XPN5379-TS)			BKR 13
XCB5772 PRIMARY	14.1		
SWITCHBOARD PANEL 25 (XPN5388-TS)			BKR 15
XCB5552 PRIMARY	14.5		
SPARE			BKR 17
SWITCHBOARD PANEL II (XPN5855-TS)			BKR 19
XCB5122 SPARE	8		
BLANK			
TOTALS	85.8	8.8	

CIRCUIT DESCRIPTION	P	N	
SWITCHBOARD PANEL 28 (XPN5376-TS)			BKR 2
XCB5822 PRIMARY	14.5		
SWITCHBOARD PANEL 33 (XPN5381-TS)			BKR 4
XCB5852 PRIMARY	14.5		
SPARE			BKR 6
FUTURE SWITCHBOARD PANEL 5			BKR 8
XCB5912 PRIMARY	14.1		
SWITCHBOARD PANEL 7 (XPN5383-TS)			BKR 10
XCB5732 PRIMARY	14.5		
SPARE			BKR 12
SWITCHBOARD PANEL 24 (XPN5389-TS)			BKR 14
XCB5782 PRIMARY	14.5		
SPARE			BKR 16
SPARE			BKR 18
SURGE PROTECTOR DWARK CO			BKR 20
BLANK			
TOTALS	71.7	0.0	

PART OF COMMUNICATIONS 6.6 AMPS

TOTAL=157.5

DC DISTRIBUTION PANELBOARD NO.3
LOAD SCHEDULE

CIRCUIT DESCRIPTION	P	N	
SWITCHBOARD PANEL 28 (XPN5376-TS)			BKR 1
BUS NO.1 DIFFERENTIAL BACKUP	5.5		
SPARE			BKR 3
SWITCHBOARD PANEL 9 (XPN5309-TS)			BKR 5
XCB5122 BACKUP	14.4		
SWITCHBOARD PANEL 27 (XPN5375-TS)			BKR 7
BUS NO.3 DIFFERENTIAL BACKUP	5.5		
SWITCHBOARD PANEL 17 (XPN5377-TS)			BKR 9
XCB5832B BACKUP	14.4		
FUTURE SWITCHBOARD PANEL 18			BKR 11
BUS 5 DIFFERENTIAL BACKUP	5.5		
DIGITAL FAULT RECORDER (DDR7588-TS)			BKR 13
DRAWING NO. E-229-163	2.5		
FUTURE SWITCHBOARD PANEL 34			BKR 15
GEN BKR 8902 BKR FAILURE	14.1		
FUTURE SWITCHBOARD PANEL 22			BKR 17
AUX BKR 8892 BKR FAILURE	14.1		
SURGE PROTECTOR DWARK CO			BKR 19
BLANK			
TOTALS	71.8	0.0	

CIRCUIT DESCRIPTION	P	N	
SWITCHBOARD PANEL 28 (XPN5376-TS)			BKR 2
XCB5822 BACKUP	14.4		
SWITCHBOARD PANEL 9 (XPN5309-TS)			BKR 4
BUS NO.2 DIFFERENTIAL BACKUP	5.5		
SPARE			BKR 6
SWITCHBOARD PANEL 27 (XPN5375-TS)			BKR 8
XCB5912 BACKUP	8.24		
SWITCHBOARD PANEL 17 (XPN5377-TS)			BKR 10
XCB5832 METERING	14.4		
FUTURE SWITCHBOARD PANEL 18 (XPN5378-TS)			BKR 12
BUS NO.5/6 TIE BUS BACKUP	5.5		
SWITCHBOARD PANEL 14 (XPN5378-TS)			BKR 14
XCB5732 METERING	8.24		
SWITCHBOARD PANEL 15 (XPN5381-TS)			BKR 16
XCB5852 METERING	8.24		
SPARE			BKR 18
SPARE			BKR 20
BLANK			
TOTALS	49.82	0.0	

TOTAL=108.52

DC DISTRIBUTION PANELBOARD NO.4
LOAD SCHEDULE

CIRCUIT DESCRIPTION	P	N	
SWITCHBOARD PANEL 38 (XPN5392-TS)			BKR 1
XCB5832 BACKUP	14.1		
SWITCHBOARD PANEL 32 (XPN5392-TS)			BKR 3
XCB5852A BACKUP	14.8		
SPARE			BKR 5
FUTURE SWITCHBOARD PANEL 4			BKR 7
XCB5902 BACKUP	14.1		
SWITCHBOARD PANEL 6 (XPN5367-TS)			BKR 9
XCB5712 BACKUP	14.8		
SPARE			BKR 11
SWITCHBOARD PANEL 23 (XPN5379-TS)			BKR 13
XCB5772 BACKUP	14.1		
SWITCHBOARD PANEL 25 (XPN5388-TS)			BKR 15
XCB5552 BACKUP	14.8		
SPARE			BKR 17
SPARE			BKR 19
BLANK			
TOTALS	84.3	8.8	

CIRCUIT DESCRIPTION	P	N	
SWITCHBOARD PANEL 31 (XPN5381-TS)			BKR 2
XCB5842 BACKUP	14.8		
SWITCHBOARD PANEL 33 (XPN5383-TS)			BKR 4
XCB5862 BACKUP	14.8		
SPARE			BKR 6
FUTURE SWITCHBOARD PANEL 5			BKR 8
XCB5922 BACKUP	14.1		
SWITCHBOARD PANEL 7 (XPN5383-TS)			BKR 10
XCB5742 BACKUP	14.8		
SPARE			BKR 12
SWITCHBOARD PANEL 24 (XPN5389-TS)			BKR 14
XCB5792 BACKUP	14.8		
SPARE			BKR 16
SPARE			BKR 18
SURGE PROTECTOR DWARK CO			BKR 20
BLANK			
TOTALS	78.2	8.8	

TOTAL=1054.5

NOTES

1. TWO OUTSIDE POLES ARE USED TO SWITCH DC.
2. FOR REFERENCES AND EQUIPMENT LOCATIONS SEE DRAWING E-229-056.
3. TAPE AND ISOLATE BARE GROUND WIRE WHERE INDICATED.
4. FOR BATTERY CONNECTIONS SEE DRAWING E-229-056.

RN 12-028 RN 12-026
RN 13-026 RN 14-019

INFORMATION ONLY
THIS ENTIRE DRAWING HAS BEEN REDRAWN ON REVISION 1 IN ITS ENTIRETY TO REFLECT PANEL AND BUS RECONFIGURATION

NO.	DATE	BY	REVISION	CKD. BY	APPROVAL
2	2/2/2015	VMK	REV PER ECR50884, 50885, 50932, 50934	AMR	NE
1	10/07/2014	DDJ	REV PER ECR50883, ECR50777, ECR50772	MGR	NE
0	9/9/2014	DDJ	ISSUED PER ECR50748A	MGR	NE

FSAR Figure 8.3-5a

SOUTH CAROLINA ELECTRIC & GAS COMPANY
VIRGIL C. SUMMER NUCLEAR STATION

ELECTRICAL
230 KV SUBSTATION UNIT 1 RELAY HOUSE
DC ONE LINE DIAGRAM AND PANEL SCHEDULES
DESIGN ENGINEERING
V. C. SUMMER NUCLEAR STATION JENKINSVILLE, S. C.

MADE	CHECKED	LE APPROVAL
DDJ	MGR	NE

SCALE: NO SCALE | DRAWING NUMBER: E-229-152 | SHT. NUMBER: 2 | REV: 2

CONTAINS CONTROL ENERGY INFRASTRUCTURE INFORMATION CONSIDERED CEII PROPRIETARY PRODUCT OF SCANA SERVICES INC. & SCE&G COMPANY. ANY UNAUTHORIZED USE, REPRODUCTION OR TRANSFER OF THIS MATERIAL IS STRICTLY PROHIBITED. ALL RIGHTS RESERVED.

1/4"=1'-0" 0' 5' 10' 15' 20'

PLAN "SAFETY" DWG ENTRY JOB

230KV SUBSTA DC PANELBORDS

FUSIBLE SWITCHES (FUSES NOT SUPPLIED BY NEVARES & CO.)				MOLDED CASE CIRCUIT BREAKERS					
AMPERE RATING	NO. OF LUGS PER Ø	PHASE LOAD SIDE LUGS WIRE RANGE min.	PHASE LOAD SIDE LUGS WIRE RANGE MAX.	FRAME	TRIP AMPERE RATING	INTERRUPTING CAPACITY R.M.S. SYMMETRICAL AMPERES AT SYSTEM VOLTAGES	NO. OF LUGS PER Ø	PHASE LOAD SIDE LUGS WIRE RANGE min.	PHASE LOAD SIDE LUGS WIRE RANGE MAX.
				KA	-	14,000	1		#2
				LA	-	20,000	1		250

NAMEPLATE TABLE	
CKT. No.	INSCRIPTION
1	TRAIN B-AC
2	TRAIN A-AC
3	TRAIN B-DC
4	TRAIN A-DC

POWERSWITCH ROTALLY ENCLOSED DEAD FRONT SWITCHBOARD

NOTES:

1. Switchboard frame constructed of formed steel angles & channels are welded & bolted together. Frame enclosed formed removable panels on front, rear, & sides, flat removable plate on top. Frame is mounted on 4.5" x 3" steel floor channels (see Drawing E12-04089-2A1 for anchor bolt details).
2. Switchboard Paint Finish: Phosphate rust inhibiting undercoat & finish coat of Square D Standard Gray ANSI #61 Baked Enamel (1 mil. minimum thickness).
3. Bussing with plated joints and copper bus bars based on a maximum temperature rise of 50 degrees C above an ambient temperature of 40 degrees C.
4. Switchboard main bus brace to withstand 50,000 R.M.S. Symmetrical Amperes.
5. Service: 600 Amperes, 2 Wire, 125 Volts D.C. and 208Y, 3 Phase, 3 Wire, 480 Volts A.C.
6. Lug sizes shown on this drawing are for copper or aluminum unless otherwise specified.
7. Section constructed for moving on rollers.
8. Packing for shipment to be in compliance with ANSI #45.2-2, Level B, except equipment will not be totally crated and no desiccants will be provided.
9. Terminal blocks to be States Type M25. Spare terminal blocks to be provided.
10. AMP insulated ring tongue terminals for #14 control wire to be used for all control wire connections.
11. AMP Ampower lugs to be used for all connections on linestde and loadside of breakers.
12. Control wire to be #14 AWG, Type SIS, 7-Strand, 600 Volt insulation, except across hinged points where 41-Strand WIS wire will be used. All control wires to be labeled at both ends.
13. Approximate shipping weight: 3900 pounds.
14. Bakelite nameplates, white with 1/4" black letters, to be inscribed per table.
15. Circuits 1-4 and 2-3 to have Kirk Key Interlocks so that only one breaker of each pair may be on at a time. Circuits 1-2 and 3-4 to have walking beam interlock so that only one breaker of each pair may be on at a time.
16. Breakers to have padlock attachment capable of holding 3 padlocks.
17. SEE E12-04089-2A2 FOR WIRING DETAILS.

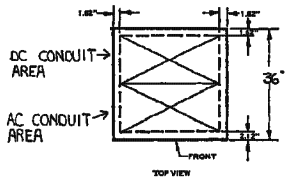

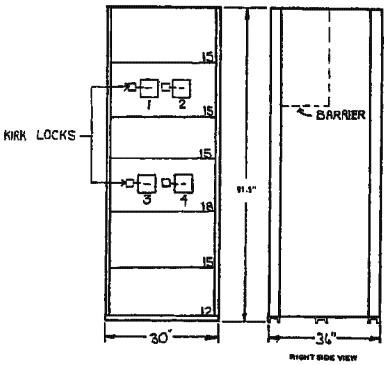

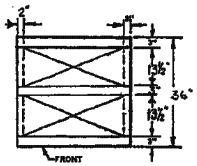

REPRESENTS AVAILABLE CONDUIT ENTRANCE AREA

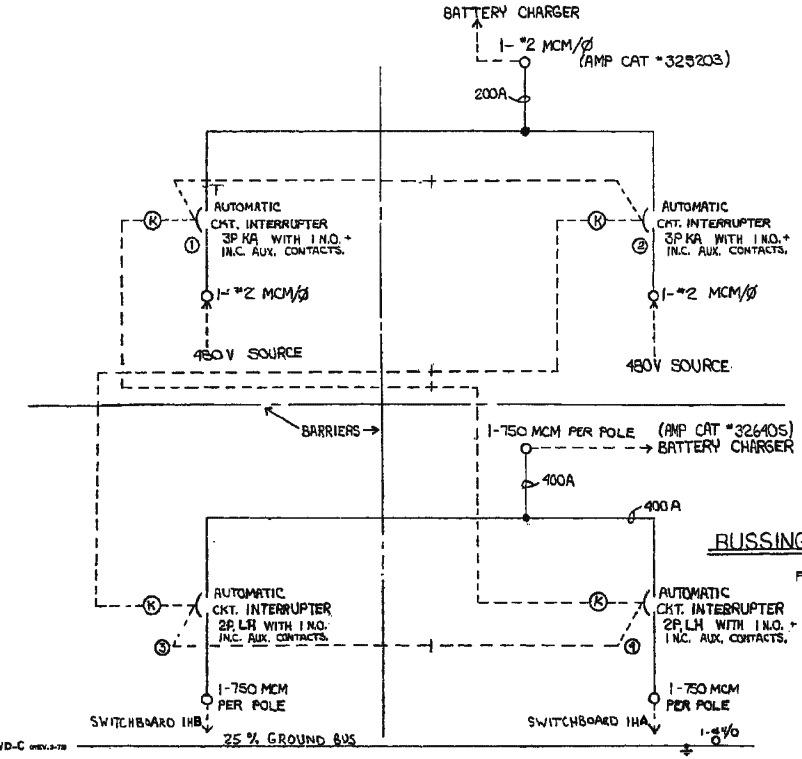

BUSSING DIAGRAM

FRONT VIEW

SWD-C REV. 3-78

SOUTH CAROLINA ELECTRIC & GAS CO.
VIRGIL C. SUMMER NUCLEAR STATION UNIT No. 1

- [X] APPROVED
- [ ] APPROVED AS NOTED
- [ ] RETURNED FOR CORRECTION

CHECKING IS ONLY FOR GENERAL DESIGN AND GENERAL DIMENSIONS SET FORTH IN CONTRACT DOCUMENTS AND DOES NOT RELIEVE CONTRACTOR FROM HIS OBLIGATION AS TO DETAIL WORKMANSHIP AND GUARANTEES.

GILBERT ASSOCIATES, INC.
BY: [signature]
R/M ITEM No. ER-8 DATE 3/15/77
125 VDC Main Dist. Pnl.

Amendment 02-01
May 2002

JOB TITLE: V.C. SUMMER NUCLEAR STATION	3	TAC	REVISED NOTE #9	WMS 12-12-77
LOCATION: PARR, SOUTH CAROLINA	1	WMS	PER NOTES	MRR 3-10-77
ARCHITECT:	2	WMS	PER NOTES	MRR 5-13-77
ENGINEER: GILBERT ASSOCIATES, INC.	NO.	CHKD	REVISIONS	BY DATE
ELEC. CONTRACTOR: SC. ELECTRIC & GAS CO.				
CUSTOMER: S.C. ELECTRIC & GAS CO.				
CUST. ORDER NO. SN-10202-SR DRAWN: RICHTER SCALE: N.T.S.				
FACTORY ORDER NO. 12-04089-2 CHECKED: WMS DATE: 2-1-77				

3	8/8/78	ODJ	REVISED PER ECR-70028	MGR	ODJ
2	2/8/78	JTS	REVISED PER MRF-10887H	MGR	LEK
NO.	DATE	BY	REVISION	CHD. BY	APPROVAL

FSAR Figure 8.3-6
125 VDC MAIN DIST. PNL.
FOUNDATIONAL SOFTWARE A COMPANY
C12-04089-2A1

DESIGN ENGINEERING
V. C. SUMMER NUCLEAR STATION, JENKINSVILLE, S.C.

DRAWN	CHECKED	LC APPROVAL
JTS	MGR	LEK

IMS-37-043 | 0 | 3

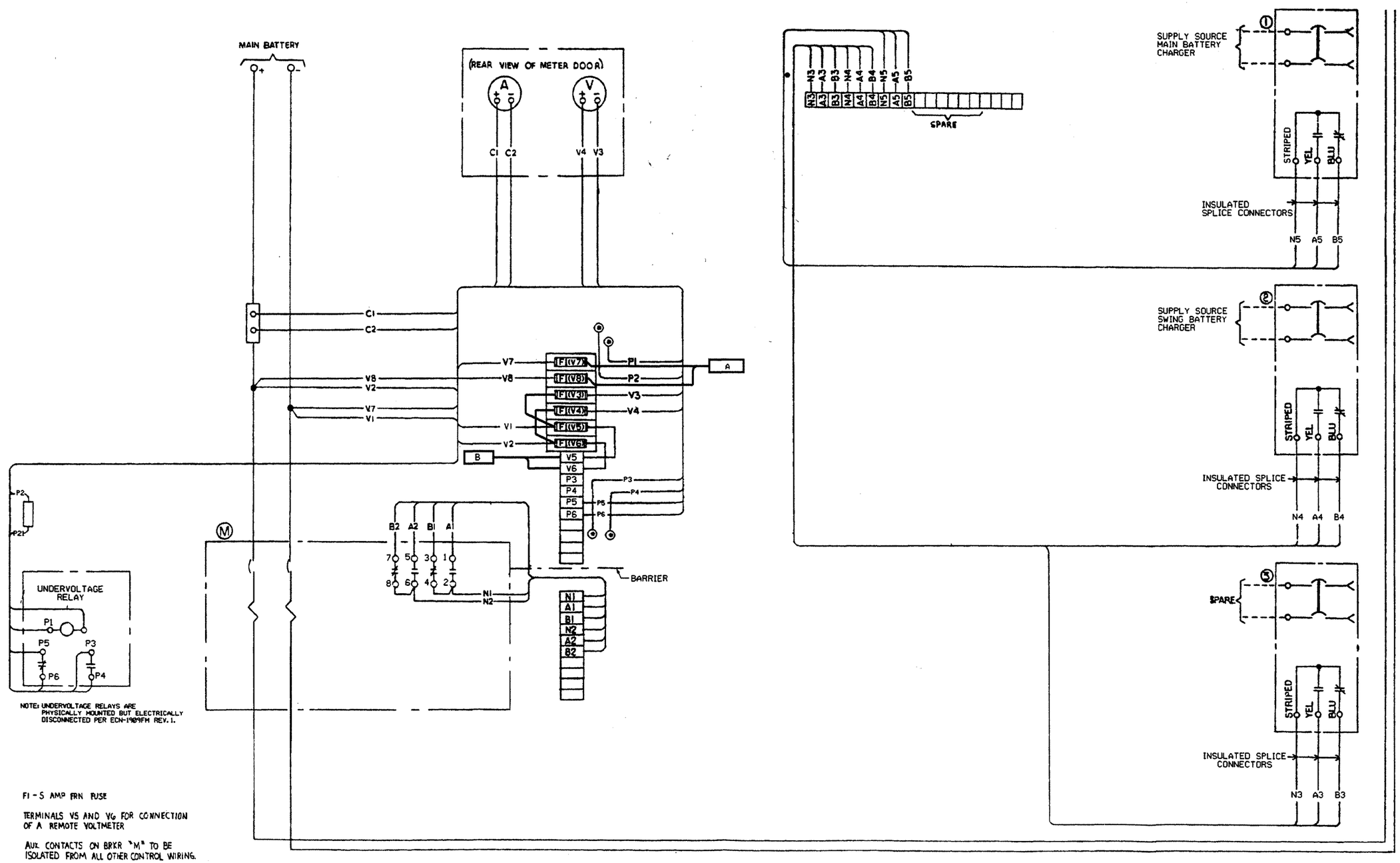

NOTE: UNDERVOLTAGE RELAYS ARE PHYSICALLY MOUNTED BUT ELECTRICALLY DISCONNECTED PER ECN-1909FM REV. 1.

F1 - 5 AMP FRN FUSE

TERMINALS V5 AND V6 FOR CONNECTION OF A REMOTE VOLTMETER

AUX CONTACTS ON BRKR "M" TO BE ISOLATED FROM ALL OTHER CONTROL WIRING.

* WIRES DISCONNECTED FROM FUSES AND TERMINAL BLOCK.

PANEL #	CKT A	CKT B
DPN1HA	EDE101XA	EDJ5XA
DPN1HB	EDE102XB	EDJ7XB

SOUTH CAROLINA ELECTRIC & GAS CO.
Virgil C. Summer Nuclear Station Unit No. 1

☒ APPROVED
☐ APPROVED AS NOTED
☐ RETURNED FOR CORRECTION

CHECKING IS ONLY FOR GENERAL DESIGN AND GENERAL DIMENSIONS SET FORTH IN CONTRACT DOCUMENTS AND DOES NOT RELIEVE CONTRACTOR FROM HIS OBLIGATION AS TO DETAIL, WORKMANSHIP AND GUARANTEES.

GILBERT ASSOCIATES, INC.
BY M.K. Sharma
ENG ITEM No. EH-8 DATE 3/15/78
125V DC Main Dist. PNL

JOB TITLE: V.C. SUMMER NUCLEAR STATION
LOCATION: PARR SOUTH CAROLINA
ARCHITECT:
ENGINEER: GILBERT ASSOCIATES, INC.
ELEC. CONTRACTOR: S.C. ELECTRIC & GAS CO.
CUSTOMER: S.C. ELECTRIC & GAS CO.
CUST. ORDER NO. SN-10202-SR
FACTORY ORDER NO. 12-04089-1

DRAWING LEGIBILITY
CLASS 2
SCE&G CAD ENHANCED

NO.	DATE	BY	REVISION	CKD. BY	LE APPROVAL
6	1/18/97	TMZ	REVISED PER CGSS-97-0043	MGR	RES
5	04/17/98	JTS	REVISED PER CGSS-98-0223	JAC	RES
4	01/21/92	ACI	REVISED PER MRF-21558	RHM	SGC

FSAR Figure 8.3-7
125V DC MAIN DIST. PNL
SQUARE D COMPANY
VENDOR DRAWING NO. D12-04089-1A2
DESIGN ENGINEERING
V.C. SUMMER NUCLEAR STATION JENKINSVILLE, S.C.
MADE ACI | CHECKED RHM | LE APPROVAL SGC
NO. 1MS-37-041 | 6

Amendment 98-01
April 1998

Amendment 98-01 April 1998

370002.m(3004.xx104a9) TZ80645@xx104a9. Wed Jan 29 09:35:58 CST 1997

NO.	DATE	BY	REVISION	CHKD. BY APPROVAL	
8	8/93	RH-H	REVISED PER ECR-9B092 AND ECR-75549 & ECR-9A056	MGR. KV DESIGN ENGINEERING GM	
7	10/92	JMH	REVISED PER ECR-9B028	MGR. SCS	
6	8/89/A	JTS	REVISED PER ECR-8B029	MGR. SCS	
5	4/89/B	TJS	REVISED PER ECR-9A097	MGR. GJH	
4	8/93	RH-H	REVISED PER ECR-9A104	MGR. TF	
3	8/93/A	RH-H	REVISED PER ECR-9A105	MGR. LEK	

DRAWN	DATE	CHECKED	DATE
JTS	8/93	MGR	LEK

SCALE	NONE
DRAWING NUMBER	E-203-201
SHEET	9

FSAR Figure 8.3-8

SOUTH CAROLINA ELECTRIC & GAS COMPANY

VIRGIL C. SUMMER NUCLEAR STATION

ELECTRICAL

REACTOR TRIPBREAKER AND CONTROL

TRIP DIAGRAM

DESIGN ENGINEERING

DETAIL 2 RN 13-030

LEGEND:

- = OR GATE
- = AND GATE
- = NOT
- = TIME DELAY
- = HYDRAULIC LINE
- = ELECTRICAL LINE
- = MECHANICAL CONNECTION
- P6 = 1/2 NEUTRON FLUX UNTIMEDIATE HANGED ABOVE SETPOINT / 2 NEUTRON FLUX UNTIMEDIATE HANGED BELOW SETPOINT
- P7 = 3 / 4 NEUTRON FLUX POWER RANGED BELOW SETPOINT AND 2 / 2 TURBINE IMPULSE CHAMBER PRESSURE BELOW SETPOINT
- P8 = 3 / 4 NEUTRON FLUX POWER RANGED BELOW SETPOINT
- P10 = 2 / 4 NEUTRON FLUX POWER RANGED ABOVE SETPOINT
- P9 = 3 / 4 NEUTRON FLUX POWER RANGED BELOW SETPOINT
- P-9 = 2 / 4 NEUTRON FLUX POWER RANGED ABOVE P8X SETPOINT

DETAIL 1

CO-ORDINANCE B-16

.5 SEC

1000

.5 SEC

1000

VOLT REG NOR CONTACTOR OPEN CORE 2

VOLT REG NOR CONTACTOR OPEN CORE 2

VOLT REG NOR CONTACTOR OPEN CORE 1

VOLT REG NOR CONTACTOR OPEN CORE 1

VOLT REG TRANSFER TO NORMAL CORE 1/2

VOLT REG LOSS OF PRIMARY PIS CORE 1/2

VOLT REG LOSS OF PRIMARY & SECONDARY PIS CORE 1/2

VOLT REG LOSS OF PRIMARY PIS CORE 2

GENERATOR BREAKER SIDE BREAKER CLOSED 52XGB

MAIN XFMR HI SIDE BREAKER CLOSED 52XHX3

TRAIN 'B' REACTOR TRIPS SHUNT TRIPS AS SHOWN

TRAIN 'A' REACTOR TRIPS SHUNT TRIPS AS SHOWN

WESTINGHOUSE

BY STEAM DUMP

TO STEAM DUMP

P-9 ABOVE 10% POWERED

REACTOR TRIP ON SIMILAR TO 'A'

TO TRAIN 'B' REACTOR TRIP CLOSED

P-9 ABOVE 50% POWERED

VALVES CLOSED TRAIN 'A'

VALVES CLOSED TRAIN 'B'

CLOSE EXTRACTION VALVES

EXTRACTION STEAM VALVE

TRAIN 'A'

TRAIN 'B'

CHANNEL 1

CHANNEL 2

CHANNEL 3

CHANNEL 4

TRIP BUS LOSS OF PRESSURE P458A

TRIP BUS LOSS OF PRESSURE P458B

TRIP BUS LOSS OF PRESSURE P459A

TRIP BUS LOSS OF PRESSURE P459B

G.E. TURBINE LOGIC

CLOSE MAIN STEAM ISOLATION VALVES

RELAY PANEL PANEL

INTERCEPT VV #1 CLOSED 1V4-1

INTERCEPT VV #2 CLOSED 1V4-2

INTERCEPT VV #3 CLOSED 1V4-3

INTERCEPT VV #4 CLOSED 1V4-4

INTMD STOP VV #1 CLOSED 1SV4-1

INTMD STOP VV #2 CLOSED 1SV4-2

INTMD STOP VV #3 CLOSED 1SV4-3

INTMD STOP VV #4 CLOSED 1SV4-4

STOP VALVE #1 CLOSED SV1-1

STOP VALVE #2 CLOSED SV1-2

STOP VALVE #3 CLOSED SV1-3

STOP VALVE #4 CLOSED SV1-4

TRAIN A TRIP SOLENOIDS 2/3

TRAIN B TRIP SOLENOIDS 2/3

TRAIN A TRIP HEADER DUMP VLVS 2/3

TRAIN B TRIP HEADER DUMP VLVS 2/3

TRAIN A CUSTOMER TRIPS

EXTERNAL TO EHC SYSTEM

TRAIN B CUSTOMER TRIPS

EXTERNAL TO EHC SYSTEM

TURBINE SPEED ABOVE 2826

TURBINE SPEED MAIN STOP VALVE TRIP 2/3

LOSS OIL PRESSURE LOW TRIP 2/3

HYDRAULIC HEADER PRESS LOW TRIP 2/3

EXCESSIVE HOOD HIGH TEMPERATURE TRIP 2/3 EACH HOOD

LOSS OF STATOR COOLING-TRIP ON FAILED FEEDBACK

TURBINE AXIAL POSITION TRIP 2/3

REMOTE MANUAL TRIP

MOISTURE SEPARATION LEVEL HIGH TRIP

SPLIT PACK HIGH TRIP

REHEAT STEAM TEMPERATURE HIGH TRIP

OFF-LINE 2/3 GTD TEST TRIP GTD TRAIN A AND GTD TRAIN B

MANUAL TURBINE TRIP PUSHBUTTONS 2/3

6 LOCATED BOTH ON MCB AND ON FRONT STD

<10 AND <P7 SPEED DIFFERENCE FAIL TRIP

EMERGENCY <P7 EXCESSIVE ACCEL/DECEL RATE CHG TRIP

PRIMARY <P7 EXCESSIVE ACCEL/DECEL RATE CHG TRIP

EMERGENCY <P7 OVERSPEED TRIP

PRIMARY <P7 OVERSPEED LATCHED TRIP

EMERGENCY <P7 ZERO SPEED MISMATCH TRIP

PRIMARY <P7 ZERO SPEED MISMATCH TRIP

10-48 SEC.

10-48 SEC.

REMOTE MANUAL TRIP

MAIN TRIP

TURBINE SPEED ABOVE 2826

MAIN STEAM A & MSR A SHUTOFF VALVES CLOSED 52XGA

MAIN STEAM B & MSR B SHUTOFF VALVES CLOSED 52XGB

MAIN XFMR HI SIDE BREAKER CLOSED 52XHX3

GENERATOR BREAKER SIDE BREAKER CLOSED 52XGB

MAIN XFMR HI SIDE BREAKER CLOSED 52XHX3

VOLT REGULATION LOCKOUT RELAY 86CK

TRIP BUS MAIN XFMR HIGH SIDE TIE

TRIP BUS GENERATOR BREAKER

8.4 STATION BLACKOUT

V. C. Summer Nuclear Station Unit No. 1 conforms to 10CFR50.63 entitled "Loss of All Alternating Current Power" (Station Blackout). V. C. Summer's program meets the guidance provided by Regulatory Guide (RG) 1.155, Station Blackout; Nuclear Management and Resources Council, Inc (NUMARC) 87-00, Guidelines and Technical Bases for NUMARC Initiatives addressing Station Blackout at Light Water Reactors; and NUMARC 87-00 Supplemental Questions/Answers and Major Assumptions dated December 27, 1989. Virgil C. Summer Technical Report TR08200-003 entitled "Compliance to NRC Rule 10CFR50.63" (Station Blackout), documents VCSNS compliance. Additional details are provided in the NRC issued Safety Evaluations References 1 and 2.

8.4.1 STATION BLACKOUT DURATION

NUMARC 87-00 was used to determine an SBO duration of four hours.

The following plant factors were identified in determining the proposed Station Blackout duration:

1. AC Power Design Characteristic Group is P1 based on: 00-01

    a. Independence of offsite power classification of Group "1 1/2"

    b. Severe weather (SW) classification of Group "1"

    c. An extreme severe weather (ESW) classification of Group "3"

2. The emergency AC power configuration group is C based on:

    a. There are two EDGs credited as AC power supplies

    b. One emergency AC power supply is necessary to operate safe shutdown equipment following a loss of offsite power.

3. The target EDG reliability is 0.95.

    a. A target EDG reliability of 0.95 was based on the Virgil C. Summer Station having an average EDG greater than 0.95 over the last 100 demands.

    b. EDG failure statistics for the last 20 and 50 demands, in accordance with the requirements of RG 1.155 was provided, which confirms that the target selection is appropriate.

New Section Per
Amendment 00-01

8.4.2 COPING METHOD

The V. C. Summer Nuclear Station coping method is in accordance with the "AC-Independent Approach" delineated in NUMARC 87-00 for the required coping duration of four hours and recovery therefrom. In this approach for VCSNS, DC power is required to be available for the coping duration to operate equipment necessary to achieve safe shutdown conditions until offsite or emergency AC power is restored. The following plant systems and components are required to have the availability, adequacy, and capability to achieve and maintain a safe shutdown and to recover from an SBO for a four-hour coping duration.

8.4.2.1 Class 1E Battery Capacity

The V. C. Summer Nuclear Station has sufficient battery capacity and size to support decay heat removal during a Station Blackout for the required four-hour coping duration in accordance with NUMARC 87-00 without load stripping, as discussed in Section 8.3.2.1.2. The battery analysis is documented/maintained in SCE&G Calculation DC08320-005.

8.4.2.2 Condensate Inventory For Decay Heat Removal

00-01

The V. C. Summer plant has adequate condensate inventory for decay heat removal during a Station Blackout for a required duration of four hours. The necessary condensate inventory is assessed by a bounding analysis based on the NUMARC 87-00 Equation. The minimum permissible condensate storage tank level per technical specification requirements provides 172,700 gallons, which exceeds the required quantity for coping with a four-hour Station Blackout per SCE&G Technical Report TR08200-003.

8.4.2.3 Compressed Air

The V. C. Summer air operated valves required for decay heat removal have been evaluated and accepted for manual operation under Station Blackout conditions for the four-hour duration.

8.4.2.4 Effects of Loss of Ventilation

The effects of loss of ventilation within areas of the plant containing equipment necessary to achieve and maintain safe shutdown during a Station Blackout is evaluated per NUMARC 87-00. The dominant areas of concern (DACs) and analysis are documented in SCE&G Technical Report TR08200-003.

8.4.2.5 Containment Isolation

Containment isolation valves that must be operated under SBO conditions must have the ability to be positioned, with indication, independent of the preferred and Class 1E AC power supplies and that no modifications or procedure changes are necessary to ensure containment integrity can be obtained if it is needed under SBO conditions. Containment isolation valve design and operation at VCSNS meet the intent of the guidance described in RG 1.155.

8.4.2.6 Reactor Coolant Inventory

The ability to maintain adequate reactor coolant system (RCS) inventory to ensure that the core is cooled has been assessed for four hours. The generic analysis listed in NUMARC 87-00 was used in this assessment. The expected rates of RCS inventory loss under SBO conditions do not result in core uncovery.

00-01

8.4.3 REFERENCES

1. USNRC Letter to SCE&G dated January 30, 1992, Subject: Safety Evaluation Regarding Station Blackout Analysis, Virgil C. Summer Nuclear Station, Unit No. 1 (TAC No. M68610).

2. USNRC Letter to SCE&G dated June 1, 1992, Subject: Supplemental Safety Evaluation Regarding Station Blackout, Virgil C. Summer Nuclear Station, Unit No. 1 (TAC No. M68610).

3. U. S. Nuclear Commission Regulatory Guide 1.155, "Station Blackout".

4. NUMARC 87-00, Nuclear Management and Resources Council, "Guidelines and Technical Bases for NUMARC Initiatives Addressing Station Blackout at Light Water Reactors".

APPENDIX 8A

ADDITIONAL CABLE AND TRAY DESIGN CONSIDERATIONS

8A.1 METHODS EMPLOYED

Sections 8A.1.1 through 8A.1.3 describe methods employed to show sufficient conservatism in the cable and tray design to assure that adequate cable tray hanger strength exists, that cables are sufficiently sized, and that the weight of upper cables in trays does not damage bottom layer cables.

8A.1.1 WEIGHT ON HANGER

Cables are routed in tray in two different configurations (e.g., single lay and random lay). The weight of the cables, tray, tray covers, fire barrier materials on the tray, and any conduits and pipes hung from the tray supports were used to establish the tray support cap ability. The allowable cable weight limit is based on the capability of the cable tray (e.g., 35 lbs/ft^2 of tray bottom area for single lay 4" deep trays and 45 lbs/ft^2 of tray bottom area for random lay 6" deep trays).

For single lay cable tray, percent fill and cable heating were not the deciding factors for limiting tray fill. Engineering determined that the maximum number of cables that a single lay tray can accommodate is based on the cable diameters versus the width of the tray.

The initial design criteria for random lay tray was based on a maximum of 50% fill. Engineering performed calculations to ensure that cable heating and cable weight were acceptable whenever the tray fill was less than 50%. Because the tray fill was conservatively calculated based on the square of the cable diameter in lieu of the cross sectional area of the cable, the actual tray fill is less than the calculated tray fill. The cable management system computer program was used to monitor tray fill. The 50% limit originally established was found to be inadequate as cables were added over the life of the plant. Therefore, calculations were performed whenever a random lay cable tray fill exceeded 50%. Subsequently the criteria for random lay power cable trays was changed to weight per tray support with an alarm point of either 50% fill for trays presently less than 50% filled or the last calculated allowable % fill for trays whose fill exceeded 50%. In addition, the criteria and alarm point for instrument and control tray were changed to weight only per tray support only, since heat loading was not a concern. 00-01

Whenever a power cable is added to a random lay power tray and the associated tray fill exceeds the previously accepted percent tray fill limit, a calculation is performed. The calculation addresses additional loading from the new power cables to ensure that the combined weight of the new and existing cables is less than the allowable design weight capability of the tray support. Heat loading is also evaluated to ensure that the existing ampacity derating factors are still applicable.

Engineering determined that cable heating was not a concern for the small currents and intermittent operating conditions associated with control and instrument cables and therefore only total cable weight needed to be considered. The design limit for control and instrumentation cable tray fill is based on verifying that the weight of the new and existing cable does not exceed the tray and tray support weight capability. The cable tray fill criteria for control and instrument trays is controlled by the cable management system computer program. This program contains an alarm limit for the maximum weight allowed for each tray size used. Therefore, manual calculations to monitor cable weight are not required because this calculation is performed by the cable management system and an alarm is provided if the tray or tray support weight capability is exceeded. 00-01

8A.1.2 CABLE HEATING

Single layer kV and 480 volt cable trays need not be considered with respect to possible cable overheating since, inherently, the fill is limited to the single layer of cable with appropriate derating factors applied. Rated ampacities are in accordance with ICEA P-46-426 [1]; the free air ratings for the applicable ambient temperatures were derated for the presence of adjacent power cables. In addition, a load factor of 100 percent was assumed and feeders are sized for 110, 125, or 140 percent of rated current, depending upon type of service (resistive loads; motors, power panels and small transformers; and large power transformers, respectively). 00-01 00-01

No ampacity derating factors are applied to control and instrument cables due to the type of service and low current levels.

For random lay power trays (Reference [2], Table 12), a 3 inch depth was used to determine cable ampacity. Therefore, derating due to tray fill need only be considered for trays with fill greater than 50 percent design objective, since the 50 percent design fill is equivalent to a 3 inch depth. The 100 percent load factor feeder sizing considerations previously noted were also applied, along with appropriate derating where required for higher ambient temperatures.

In selected cases fill above 50% was authorized to larger values after specific evaluation of heat dissipation and weight loading. Heat dissipation was evaluated using the methods described in Reference [3].

From Figure 4 of Reference [3] the following linear approximation can be made for the allowable heat generation versus tray fill: | 02-01

$$Q_d = \frac{6.5}{d^{1.47}} \qquad (1)$$

Where:

Q_d = Allowable heat generation per unit area of cable cross-section to limit conductor temperature to 90°C

d = Depth of tray fill in inches

Since heat generation in a given cable at a fixed temperature is proportional to the square of the current, the following relationships can be established:

$$Q_d = KI_d^2 \qquad (2)$$

Where:

I_d = Ampacity of cable for tray fill depth d

K = Constant

Combining into equation (1) and developing a ratio: | 00-01

$$\frac{Q_{d'}}{Q_d} = \frac{KI_{d'}^2}{KI_d^2} = \frac{(d)^{1.47}}{(d')^{1.47}}$$

Using the relationship, the curve of Figure 4 in Reference [3] was extended to cover larger fills of six inch deep tray. Because Reference [3] was developed for three inch deep tray, the tray fill permitted is one-half the value shown in Figure 4. As long as the tray fill meets this criterion, the cable ampacities of Reference [2] are still permissible.

There is an additional margin of conservatism in the heat dissipation calculation. Tray fill is calculated using diameter squared to represent cable cross-sectional area instead of actual cable area. This represents a margin of 27.3 percent above actual tray fill. In addition, non-continuous current carrying cables are not included in heat density calculations but are included in tray fill and weight calculations, which ensures conservatism.

No ampacity derating of cables has been necessary because of heat dissipation.

8A.1.3 CABLE SIDE WALL PRESSURE

In accordance with manufacture's published information the maximum allowable side wall pressure of typical cables used is considerably higher than the pressure that cables on the bottom of a tray will experience from cables above, even for fills in excess of 50 percent. The minimum allowable side wall pressure is 50 lb/ft, while the maximum loading per cable in a tray filled to the tray support limit, or 100% physical fill, will be less than 7 lb/ft [18] *. 00-01 00-01

8A.2 CONCLUSIONS

Tray fill is monitored by computer. Any tray that exceeds the design fill is reported on a separate printout. This printout is used in routing design, and cables are routed through other, less full trays. Late in construction other trays may exceed the maximum values justified in Sections 8A.1.1 through 8A.1.3. When this occurs, the situation will be evaluated and action will be taken to relieve such a condition. Alternatives are to calculate the actual tray load and verify that the load does not exceed the design capacity, enlarge the existing tray, strengthen the existing hangers, or in the case of random lay power trays where the concern is ampacity, each individual circuit application can be evaluated and the total ampacity calculated.

8A.3 REFERENCES

1. Insulated Cable Engineers Association, "Power Cable Ampacities," ICEA P-46-426-1962.

2. Insulated Cable Engineers Association, "Ampacities of Cables in Open-Top Cable Trays," ICEA P-54-440.

3. Stolpe, J. "Ampacities for Cables in Randomly Filled Trays," Institute of Electrical and Electronics Engineers Transaction Paper 70TP557PWR. 00-01

* Refers to Section 8.3, Reference [18], Calculation No. DC08500-022, "Determination of Maximum Sidewall Pressure Imposed on Cable in Cable Tray as a Result of Cable Weight." See Amendment 00-01, Revision Notice 99-14. 02-01

NOTE Appendix 8B
Appendix 8B is being retained for historical purposes only. 99-01

APPENDIX 8B

CABLE RACEWAY FIRE BARRIERS DESIGN

8B.1 PURPOSE

This report describes the criteria, assumptions and design used by Gilbert Associates, Inc. (GAI) to locate and construct cable raceway fire barriers on the Virgil C. Summer Nuclear Station for the South Carolina Electric and Gas Company.

8B.2 CRITERIA

Fire barriers were designed to comply with IEEE Standard 384-1977 “Criteria for Independence of Class 1E Equipment and Circuits.”

Fire barriers are required to prevent propagation of a fire between two, or more, raceways of redundant divisions or non-class 1E to Class 1E cable trays which do not maintain minimum physical separation. This minimum physical separation is specified in IEEE-384, and in GAI - “Construction Guideline for Electrical Circuit Physical Separation” (GAI Drawing Number S-200-926). In summary, the minimum separation distances are based on open ventilated cable trays and are as follows:

1. Cable spreading area - one foot horizontally and three feet vertically.

2. General plant area - three feet horizontally and five feet vertically.

Where the above separation is not provided the following specified criteria extracted from IEEE-384 are used:

1. The use of physical barriers or enclosed raceways, which qualify as barriers, shall be separated by a minimum distance of one inch.

2. Vertical barriers, separating redundant horizontal tray running parallel requiring horizontal separation will have a minimum of one foot (or to ceiling) extension above the top of the tray at the highest elevation in a stack.

3. Horizontal barriers, separating redundant horizontal trays crossing requiring vertical separation will have a minimum of three feet extension beyond each side of the widest tray (one foot in the cable spreading area).

4. Horizontal barriers, separating redundant horizontal trays running parallel requiring vertical separation will have a minimum of six inches extension beyond each side of the widest tray. 00-01

These barriers are intended to prevent redundant raceway-to raceway fires which are self-initiated only.

Based on the above, the following was extrapolated:

1. Solid tray covers and bottoms, referred to in this report as fire shields, may be added to open ladder tray to quality it as an enclosed raceway. Trays containing power cables (480 volt and higher) may require barriers in lieu of fire shields since fire shields may inhibit ventilation.

2. Channel tray (4 inch open top, solid bottom) will be considered an enclosed, open top tray and may require covers only.

3. Instrument trays, in this plant are installed with solid covers and bottoms and constitute an enclosed raceway.

4. Conduit alone constitutes an enclosed raceway.

5. Conduit installed beneath or alongside of an open tray of a redundant division does not require a barrier.

6. Conduit installed less than five feet (three feet in a cable spreading area) above a tray of a redundant division requires a barrier.

7. Conduits may be wrapped with a flexible fireproof material which will suffice as a barrier. This may be used where space permits installation.

8B.3 MATERIALS AND INSTALLATION

8B.3.1 FIRE SHIELDS

Tray covers and bottoms will be made of 18 gauge steel. They will be attached to the tray by one of several methods described in detail by the tray vendor for other applications in the plant. Basically, the covers are strapped or clamped to the tray. Covers will be peaked to 1 inch, except for covers for fittings which will be flat; bottoms will be flat.

8B.3.2 BARRIERS

Board barriers will be made from Babcock and Wilcox M-Board in one inch thickness. Installation techniques are under development.

8B.3.3 CONDUIT WRAPPING

Conduit wrapping will be done with Johns-Manville Cerablanket, or Babcock and Wilcox Kaowool blanket materials. These are high-temperature fiber blankets in a thickness of one inch and, typically, a width of 24 inches. The blanket will be wrapped around the conduit and fastened with fire resistant tape or by other similar method.

8B.4 ACTUAL CASES

Detailed in Figures 8B-1 through 8B-12 are representatives cases found in the Virgil C. Summer Nuclear Station where physical separation of redundant channels could not be maintained. The type of fire barrier designed for each case and the installation methods are described below. Options are provided for each case and an option may be selected, for individual cases, based on economics, available space and complexity (e.g., it may be more advantageous to use one board barrier rather than many covers and bottoms where several trays are involved).

1. Detail 1 - Redundant Horizontal Trays Crossing, Requiring Vertical separation

    a. Option A - shows the use of fire shields on each tray.

    b. Option B - shows the use of a horizontal board barrier.

2. Detail 2 - Redundant Horizontal Trays Running Parallel Requiring Vertical Separation

    a. Option A - shows the use of fire shields on each tray.

    b. Option B - shows the use of a horizontal board barrier

3. Detail 3 - Redundant Horizontal Trays Running Parallel Requiring Horizontal Separation

    a. Option A - shows the use of fire shields on each tray.

    b. Option B - shows the use of a vertical board barrier.

4. Detail 4 - Horizontal Tray Crossing Redundant Vertical Tray Requiring Horizontal Separation

    a. Option A - shows the use of a fire shield on each tray.

    b. Option B - shows the use of a vertical board barrier.

5. Detail 5 - Horizontal Conduit Crossing Over Redundant Horizontal Tray Requiring Vertical Separation

    a. Option A - shows the use of a fire shield on each tray.

    b. Option B - shows the wrapping of conduit.

    c. Option C - shows the use of a horizontal board barrier

6. Detail 6 - Horizontal Conduit Above Redundant Horizontal Tray Running Parallel Requiring Vertical Separation.

    a. Option A - shows the use of a fire shield on each tray.

    b. Option B - shows wrapping of the conduit

    c. Option C - shows the use of a horizontal board barrier.

7. Detail 7 - Vertical Conduit Crossing Redundant Horizontal Tray Requiring Horizontal Separation

    a. Option A - shows the use of a fire shield on each tray.

    b. Option B - shows wrapping of the conduit.

    c. Option C - shows the use of a vertical board barrier.

8. Detail 8 - Horizontal Conduit Crossing redundant Vertical Tray Requiring Horizontal Separation

    a. Option A - shows the use of a fire shield on each tray

    b. Option B - shows wrapping of the conduit.

    c. Option C shows the use of a vertical board barrier.

SOUTH CAROLINA ELECTRIC & GAS COMPANY VIRGIL C. SUMMER NUCLEAR STATION UNIT #1 ELECTRICAL FIRE BARRIER DETAILS	DETAILS TAKEN FROM GAI DRAWING E-201-240

FIRE BARRIER DETAILS

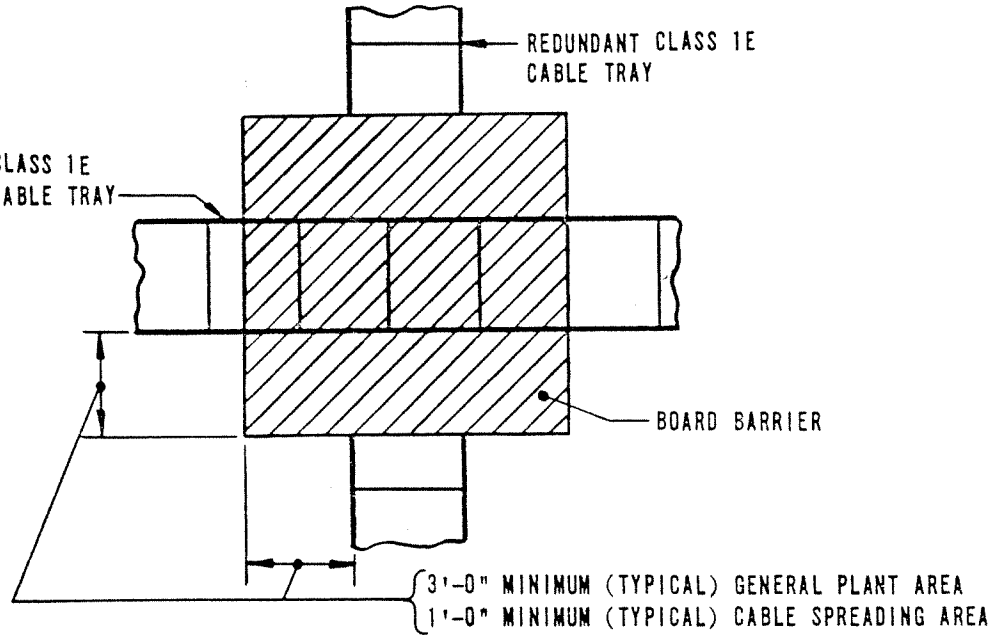

OPTION "B"

BOARD BARRIER

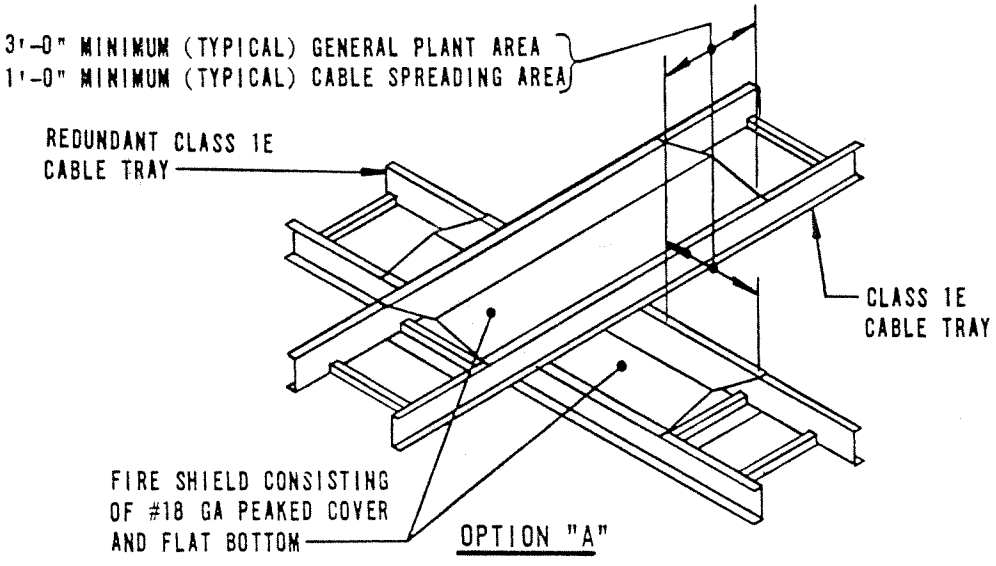

OPTION "A"

FIRE SHIELDS

DETAIL "1"

REDUNDANT HORIZONTAL TRAYS CROSSING REQUIRING VERTICAL SEPARATION

SOUTH CAROLINA ELECTRIC & GAS COMPANY VIRGIL C. SUMMER NUCLEAR STATION UNIT #1 ELECTRICAL FIRE BARRIER DETAILS	DETAILS TAKEN FROM GAI DRAWING E-201-240

FIRE BARRIER DETAILS

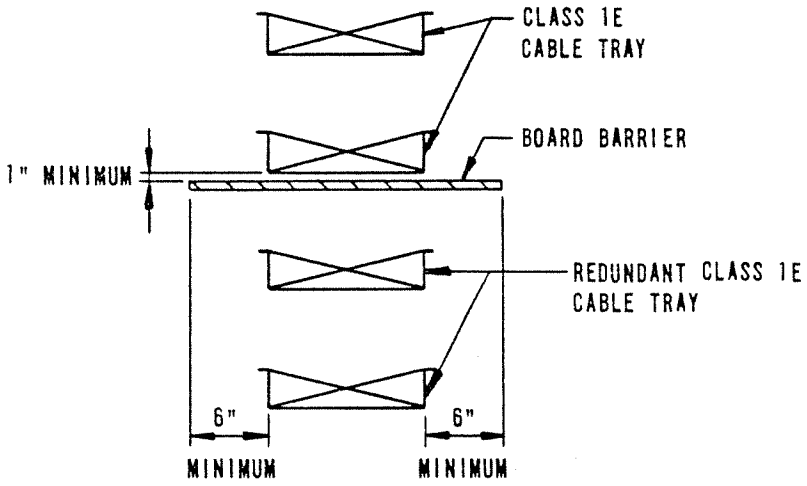

OPTION "B"

BOARD BARRIER

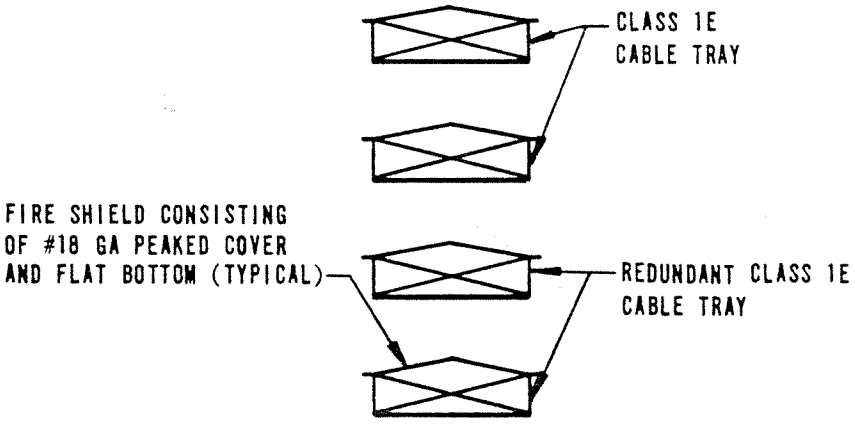

OPTION "A"

FIRE SHIELDS

DETAIL "2"

REDUNDANT HORIZONTAL TRAYS RUNNING
PARALLEL REQUIRING VERTICAL SEPARATION

SOUTH CAROLINA ELECTRIC & GAS COMPANY VIRGIL C. SUMMER NUCLEAR STATION UNIT #1 ELECTRICAL FIRE BARRIER DETAILS	DETAILS TAKEN FROM GAI DRAWING E-201-240

FIRE BARRIER DETAILS

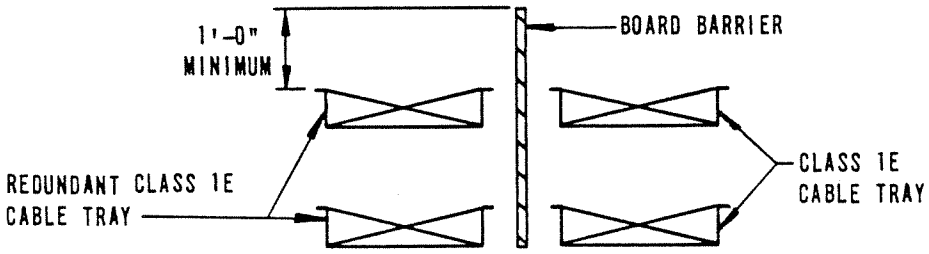

OPTION "B"

BOARD BARRIER

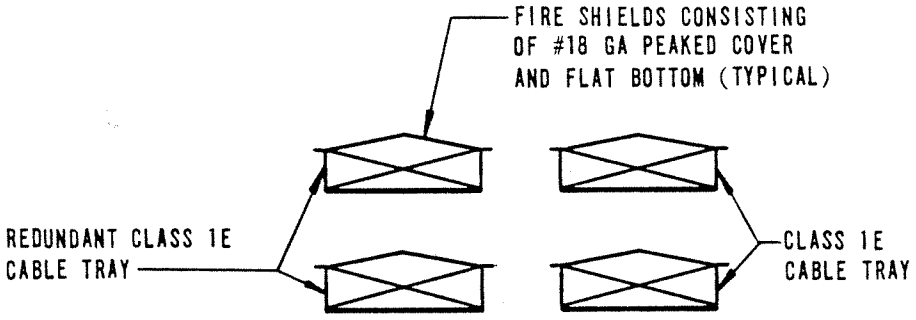

OPTION "A"

FIRE SHIELDS

DETAIL "3"

REDUNDANT HORIZONTAL TRAYS RUNNING
PARALLEL REQUIRING HORIZONTAL SEPARATION

SOUTH CAROLINA ELECTRIC & GAS COMPANY VIRGIL C. SUMMER NUCLEAR STATION UNIT #1 ELECTRICAL FIRE BARRIER DETAILS	DETAILS TAKEN FROM GAI DRAWING E-201-240

FIRE BARRIER DETAILS

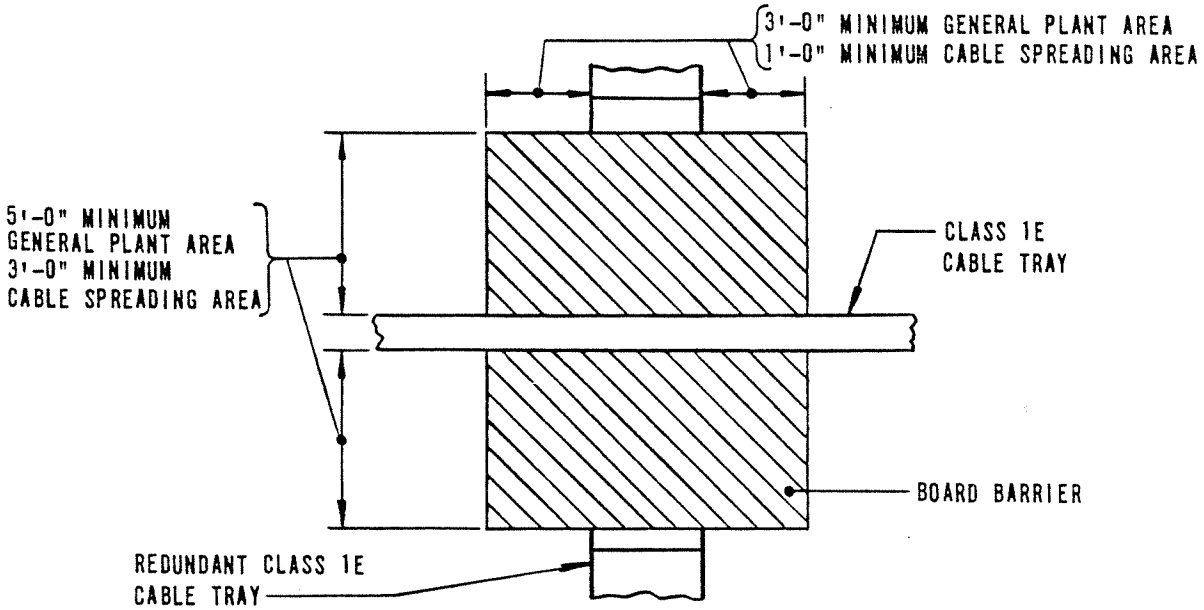

OPTION "B"

BOARD BARRIER

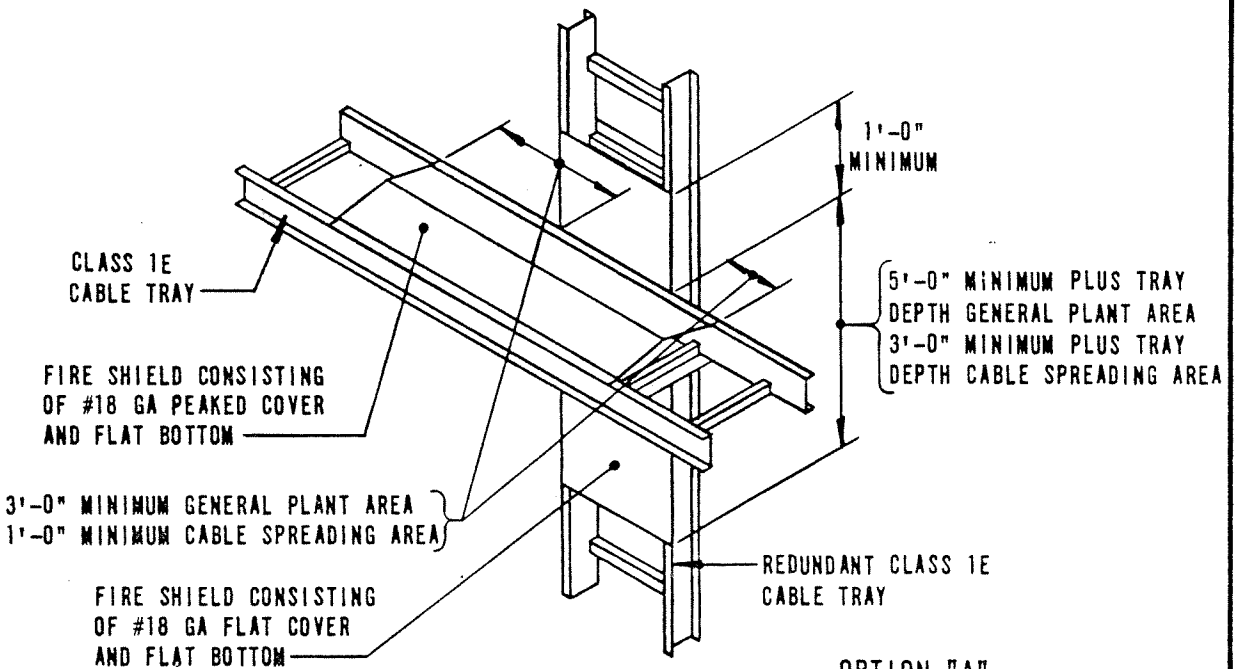

OPTION "A"

FIRE SHIELDS

DETAIL "4"

HORIZONTAL TRAY CROSSING REDUNDANT VERTICAL TRAY REQUIRING HORIZONTAL SEPARATION

SOUTH CAROLINA ELECTRIC & GAS COMPANY VIRGIL C. SUMMER NUCLEAR STATION UNIT #1 ELECTRICAL FIRE BARRIER DETAILS	DETAILS TAKEN FROM GAI DRAWING E-201-240

FIRE BARRIER DETAILS

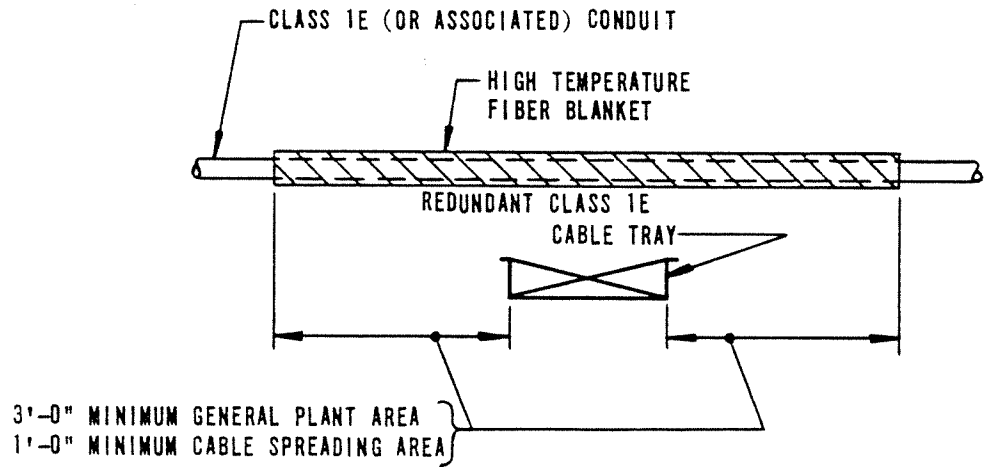

OPTION "B"

CONDUIT WRAPPING

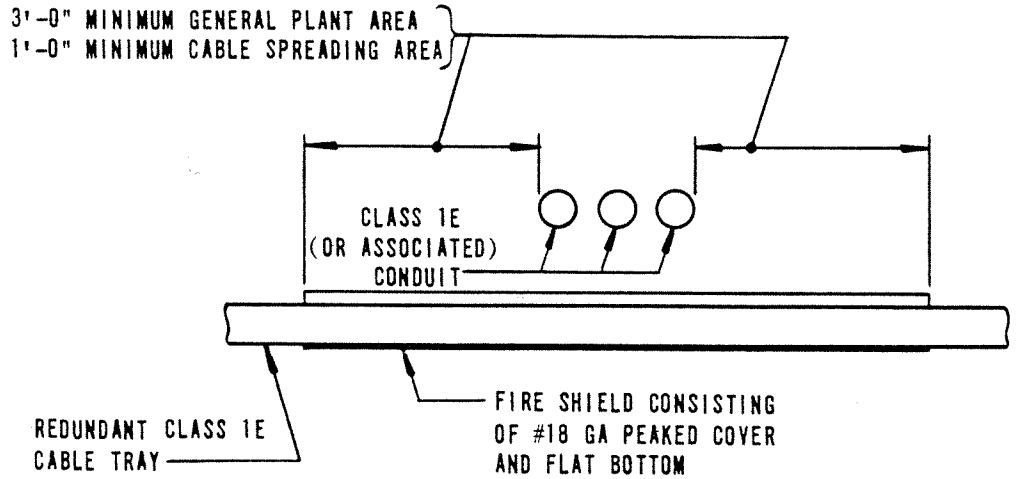

OPTION "A"

FIRE SHIELD

DETAIL "5"

HORIZONTAL CONDUIT CROSSING OVER REDUNDANT HORIZONTAL TRAY REQUIRING VERTICAL SEPARATION

SOUTH CAROLINA ELECTRIC & GAS COMPANY VIRGIL C. SUMMER NUCLEAR STATION UNIT #1 ELECTRICAL FIRE BARRIER DETAILS	DETAILS TAKEN FROM GAI DRAWING E-201-240

FIRE BARRIER DETAILS

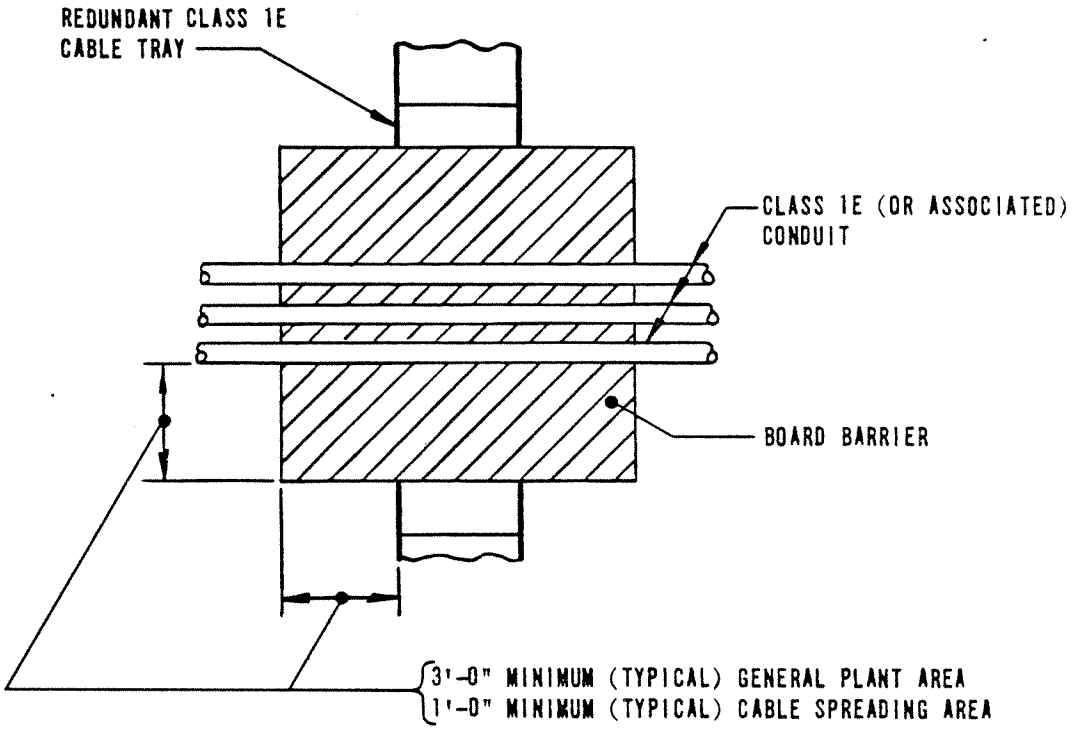

OPTION "C"

BOARD BARRIER

DETAIL "5"

HORIZONTAL CONDUIT CROSSING OVER REDUNDANT
HORIZONTAL TRAY REQUIRING VERTICAL SEPARATION

SOUTH CAROLINA ELECTRIC & GAS COMPANY VIRGIL C. SUMMER NUCLEAR STATION UNIT #1 ELECTRICAL FIRE BARRIER DETAILS	DETAILS TAKEN FROM GAI DRAWING E-201-240

FIRE BARRIER DETAILS

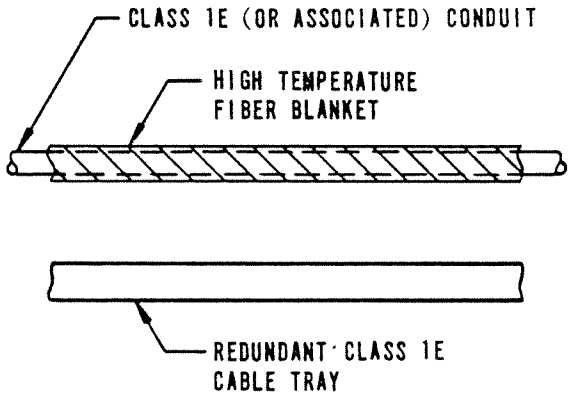

OPTION "B"

CONDUIT WRAPPING

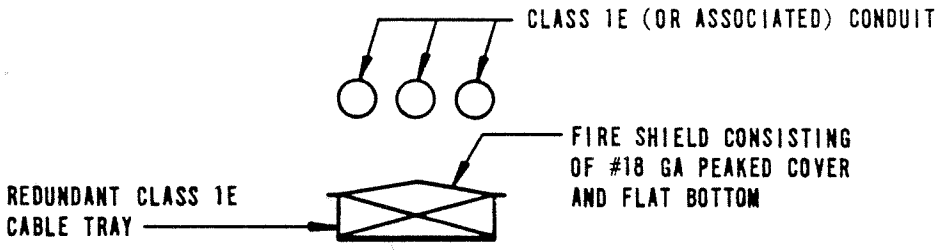

OPTION "A"

FIRE SHIELD

DETAIL "6"

HORIZONTAL CONDUIT ABOVE REDUNDANT HORIZONTAL TRAY RUNNING PARALLEL REQUIRING VERTICAL SEPARATION

SOUTH CAROLINA ELECTRIC & GAS COMPANY VIRGIL C. SUMMER NUCLEAR STATION UNIT #1 ELECTRICAL FIRE BARRIER DETAILS	DETAILS TAKEN FROM GAI DRAWING E-201-240

FIRE BARRIER DETAILS

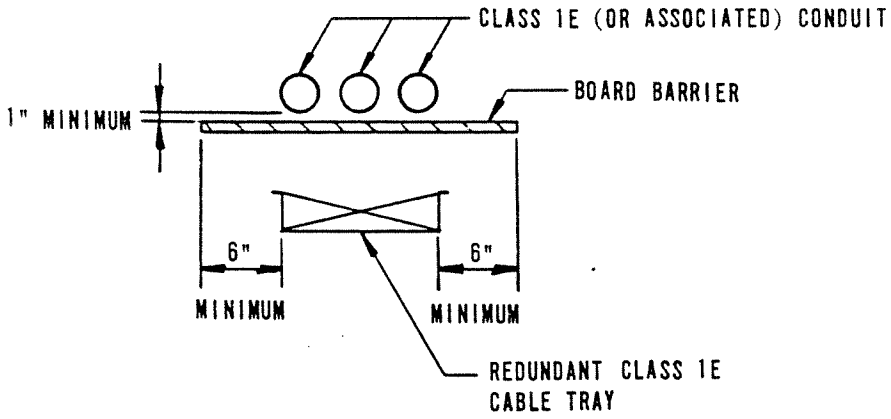

OPTION "C"

BOARD BARRIER

DETAIL "6"

HORIZONTAL CONDUIT ABOVE REDUNDANT HORIZONTAL TRAY RUNNING PARALLEL REQUIRING VERTICAL SEPARATION

SOUTH CAROLINA ELECTRIC & GAS COMPANY VIRGIL C. SUMMER NUCLEAR STATION UNIT #1 ELECTRICAL FIRE BARRIER DETAILS	DETAILS TAKEN FROM GAI DRAWING E-201-240

FIRE BARRIER DETAILS

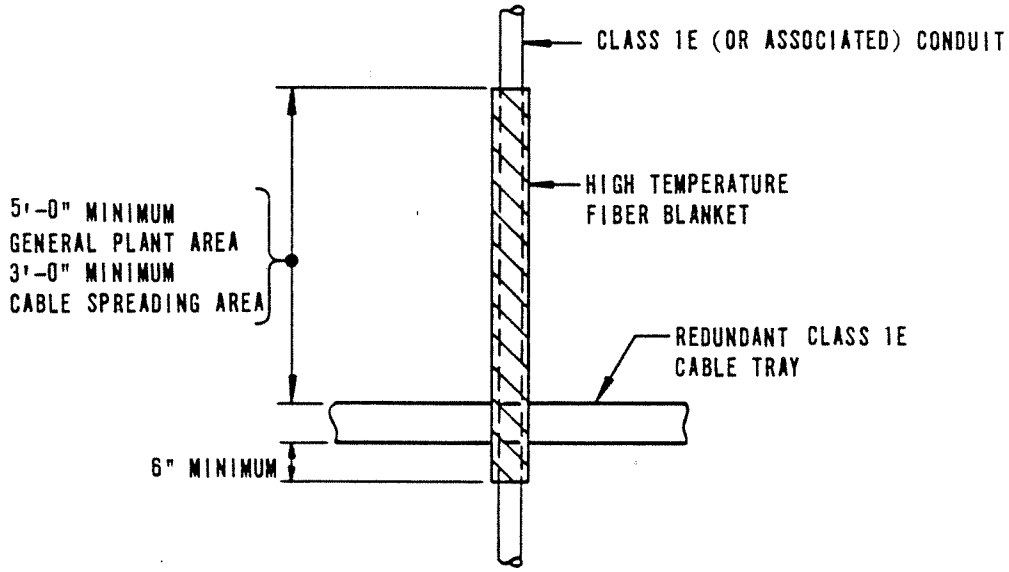

OPTION "B"

CONDUIT WRAPPING

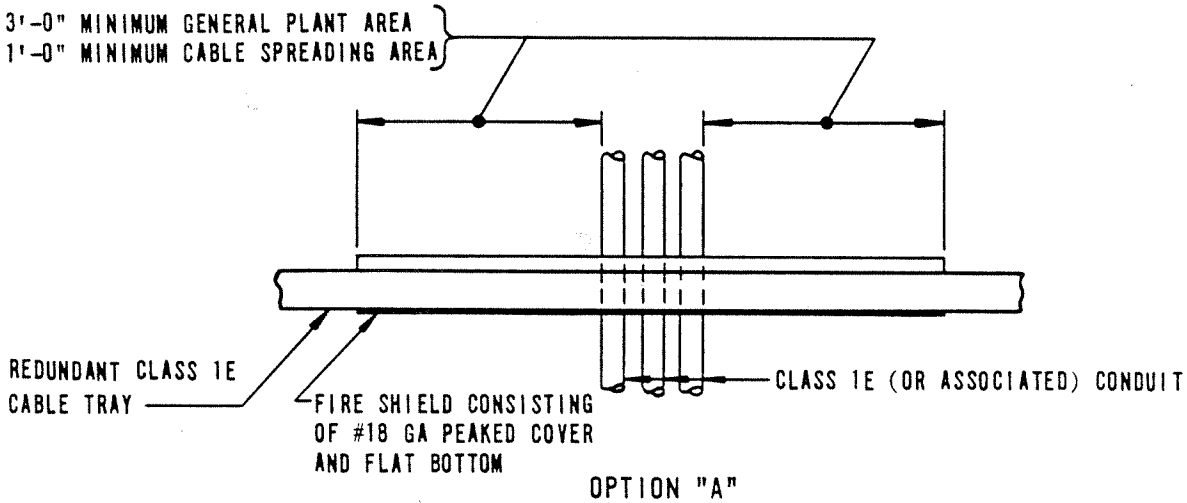

OPTION "A"

FIRE SHIELD

DETAIL "7"

VERTICAL CONDUIT CROSSING REDUNDANT HORIZONTAL TRAY REQUIRING HORIZONTAL SEPARATION

SOUTH CAROLINA ELECTRIC & GAS COMPANY VIRGIL C. SUMMER NUCLEAR STATION UNIT #1 ELECTRICAL FIRE BARRIER DETAILS	DETAILS TAKEN FROM GAI DRAWING E-201-240

FIRE BARRIER DETAILS

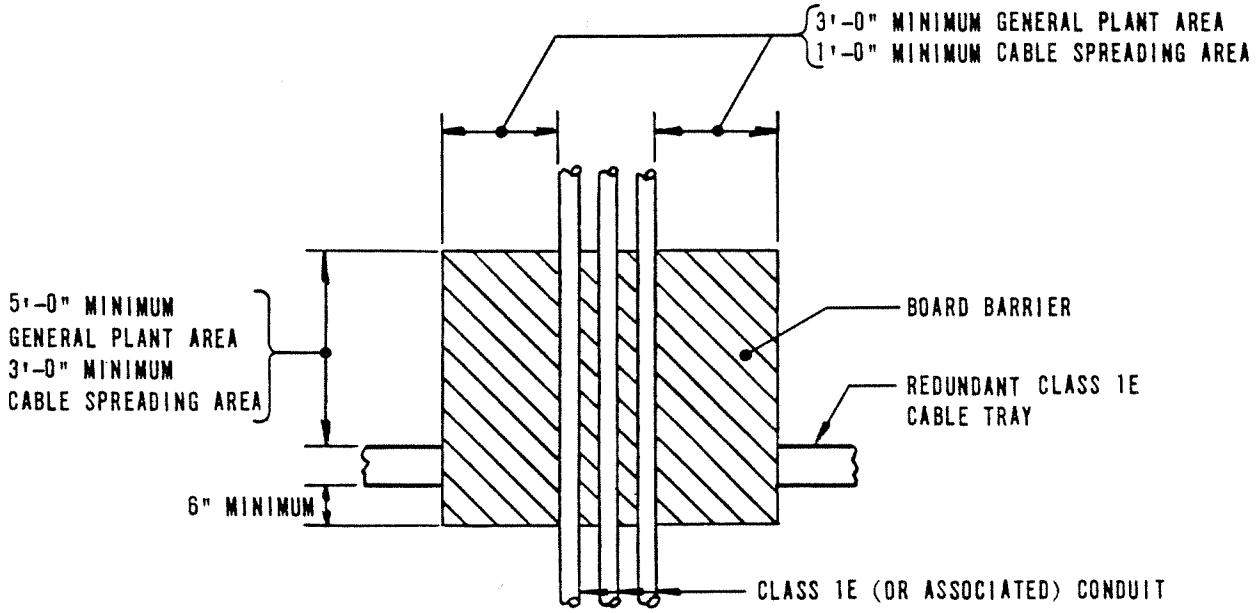

OPTION "C"

BOARD BARRIER

DETAIL "7"

VERTICAL CONDUIT CROSSING REDUNDANT HORIZONTAL TRAY REQUIRING HORIZONTAL SEPARATION

SOUTH CAROLINA ELECTRIC & GAS COMPANY VIRGIL C. SUMMER NUCLEAR STATION UNIT #1 ELECTRICAL FIRE BARRIER DETAILS	DETAILS TAKEN FROM GAI DRAWING E-201-240

FIRE BARRIER DETAILS

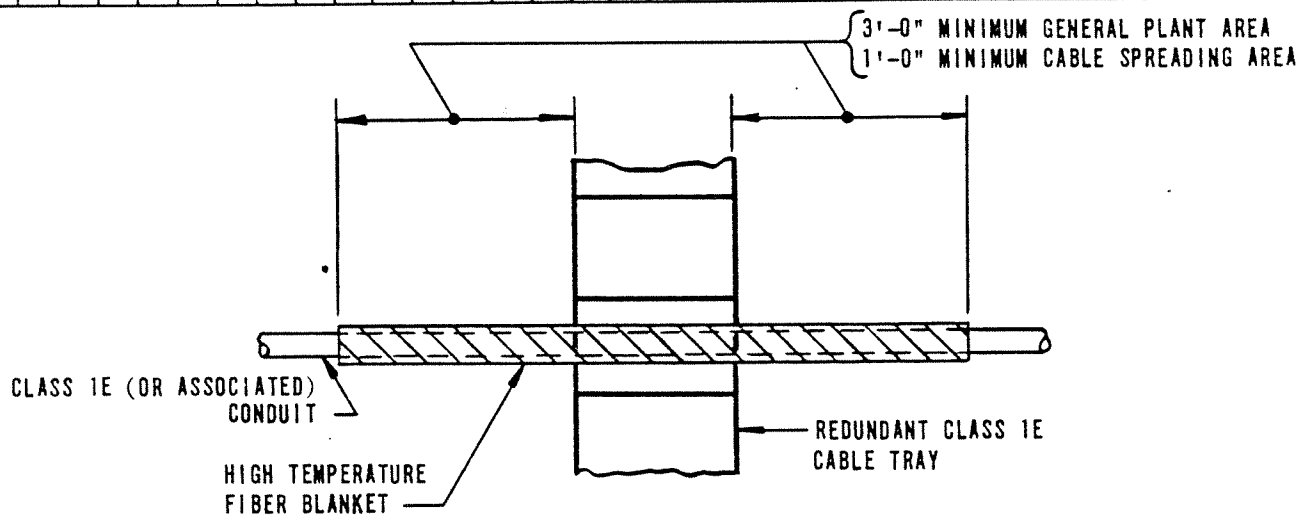

OPTION "B"

CONDUIT WRAPPING

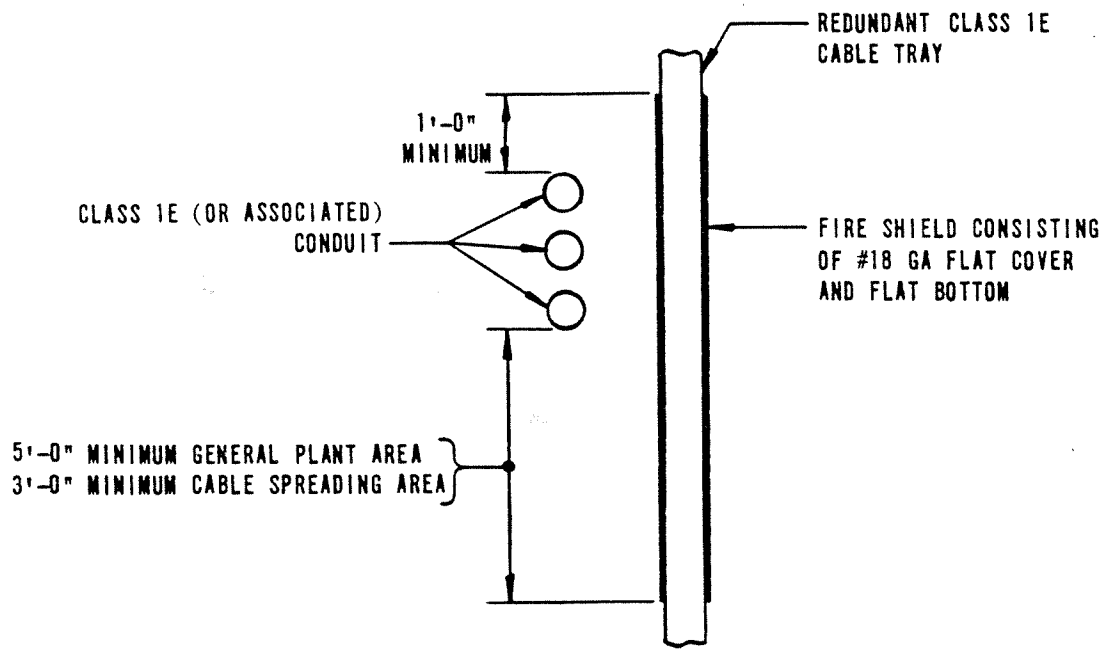

OPTION "A"

FIRE SHIELD

DETAIL "8"

HORIZONTAL CONDUIT CROSSING REDUNDANT VERTICAL TRAY REQUIRING HORIZONTAL SEPARATION

SOUTH CAROLINA ELECTRIC & GAS COMPANY VIRGIL C. SUMMER NUCLEAR STATION UNIT #1 ELECTRICAL FIRE BARRIER DETAILS	DETAILS TAKEN FROM GAI DRAWING E-201-240

FIRE BARRIER DETAILS

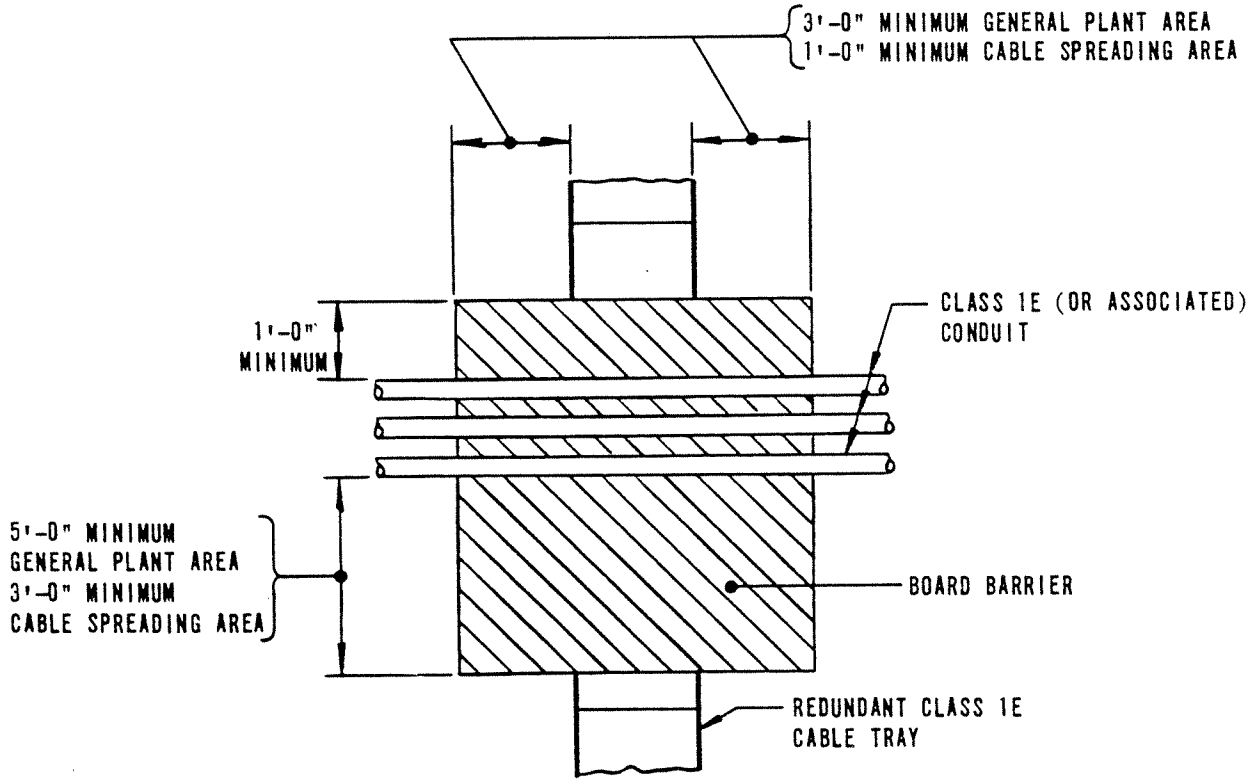

OPTION "C"

BOARD BARRIER

DETAIL "8"

HORIZONTAL CONDUIT CROSSING REDUNDANT VERTICAL TRAY REQUIRING HORIZONTAL SEPARATION

APPENDIX 8C

SUMMARY OF ANALYSIS OF SEPARATION BETWEEN TRAY FOR NON-CLASS 1E CIRCUITS AND TRAY FOR CLASS 1E CIRCUITS

8C.1 OBJECTIVE

Perform an analysis in accordance with IEEE 384-1974, Section 5.1.1.2, to ensure acceptable separation between trays for non-class 1E circuits and trays for Class 1E circuits.

8C.2 CRITERIA

Separation shall be sufficient that no single electrically initiated fire can result in the loss of a safety system function. 00-01

8C.3 BASIS

The Fire Protection Research Program tests performed at Sandia Laboratories for the U.S. Nuclear Regulatory Commission (NRC) were used as a source of data on the characteristics of cable fires. The following conclusions drawn from the reports were used in the analysis of individual situations:

1. It is difficult to initiate a fire from an electrical fault or overload in trays with cables which satisfy the flame retardant criteria of IEEE 384-1974.

2. If a fire can be started and propagated, it spreads through a stack of trays with an angle of spread of approximately 35 degrees from vertical.

3. In horizontal trays, the fire does not propagate horizontally within a given tray.

4. Fire does not propagate downward from one tray to the tray below.

The results of the IEEE 383 flammability tests for cable actually used at Virgil C. Summer Nuclear Station were also used to determine that the flammability of the cable used at Virgil C. Summer Nuclear Station is less than that used for the full scale tests at Sandia Laboratories. 00-01

8C.4 METHOD

The tray drawings for plant areas containing trays for Class 1E circuits are reviewed and each case where a tray for non-Class 1E circuits approaches a tray for Class 1E circuits is noted and given an identification number. Each case is then clarified with sections and details as necessary to determine separation distances and to categorize the situation. The cases are then individually reviewed using the basis given above to determine the adequacy of the separation. If the criteria stated above are not satisfied by the existing design, suitable barriers are added to the raceway system design so that the final design satisfies the criteria.

1. Tray for non-Class 1E circuits parallel to tray for Class 1E circuits. Subcategories include: above, below, beside, and between. 02-01

2. Tray for non-Class 1E circuits crossing tray for Class 1E circuits. Subcategories include: above, below, and between.

3. Tray for non-Class 1E circuits bridging between routes of trays for redundant Class 1E circuits. Subcategories include: above, below, and between.

4. Trays for non-Class 1E circuits diagonally parallel trays for Class 1E circuits. Subcategories include: above and below.

5. Trays for non-Class 1E circuits vertical. Subcategories include: parallel to or crossing tray for class 1E circuits.

8C.5 ANALYSIS

A listing of cases analyzed is provided by Section 8C.6. In addition, detailed analyses for three typical cases are presented in Sections 8C.5.1 through 8C.5.3.

8C.5.1 CASE NO. 041-C

8C.5.1.1 Description

1. Location

   Control Building, Elevation 425'-0

2. Figure

   Figure 8C-1

3. Type of Area

   Cable spreading room

4. General Description

   A tray for non-Class 1E (channel X) control circuits passes over a vertical stack of trays for Class 1E, channel A circuits and further north passes over a vertical stack of trays for Class 1E, channel B circuits.

5. Category

   Bridging - above

6. Types of Trays

   All trays shown in Figure 8C-1 are open ventilated ladder type, except tray 5144 (A) which is the totally metal enclosed type.

7. Number of Circuits

   Tray 4290 (x) - 316 control circuits

   Tray 4351 (x) - 103 control circuits

   Tray 4650 (x) - 38 control circuits

   Tray 4314 (A) - 337 control circuits

   Tray 4284 (A) - 182 control circuits

   Tray 5144 (A) - 124 instrument circuits

   Tray 4326 (B) - 435 control circuits

   Tray 4325 (B) - 209 control circuits

8. Significant Circuits

   Both the channel A and B trays contain a number of circuits for the component cooling water, emergency feedwater, safety injection, and service water systems; as well as circuits for other safety systems.

8C.5.1.2 Analysis

All circuits are for control or instrumentation and have very low internal energy levels. Therefore, energy is not available to initiate a fire.

Any fire which might start in the trays for non-class 1E circuits will not propagate to either of the stacks of trays for the Class 1E circuits since tests have demonstrated that cable fires do not propagate downward. In addition, the tests have shown that a cable fire will not propagate horizontally over the 5 foot-8 inch distance between the stacks of trays for the Class 1E circuits.

A fire which might start in the trays for the Class 1E circuits could propagate to trays for the non-Class 1E circuits but, as stated above, tests have shown that the fire would not propagate horizontally to the trays for the redundant Class 1E circuits nor would the fire propagate downward to the other stack. 00-01

Although the preceding analysis documents that a fire barrier is not required, a barrier was installed in the Channel B control trays in compliance with the licensing commitment to provide barriers for multiple separation violations as describe in paragraph 8.3.1.4.1, Item 4. 00-01

8C.5.2 CASE NO. 102-A

8C.5.2.1 Description

1. Location

   Reactor Building Elevation, 436'-0"

2. Figure

   Figure 8C-2

3. Type of Area

   General plant area

4. General Description

   Trays for Class 1E circuits, channels A and D, run parallel to trays for non-Class 1E (channel X) circuits throughout this elevation of the Reactor Building. No trays of other channels are present.

5. Category

   Parallel – beside

6. Types of Trays

   The trays, as shown by Figure 8C-2, consist of both open ventilated ladder trays and totally metal enclosed trays.

7. Number of Circuits

   Tray 3098 (X) - 13 480 volt random layed power circuits

   Tray 4168 (X) - 33 control circuits

   Tray 5063 (X) - 22 instrument circuits

   Tray 4174 (A) - 62 control circuits

   Tray 5069 (A) - 3 instrument circuits

   Tray 5077 (D) - 3 instrument circuits

8. Significant Circuits

   Tray 4174 contains a number of circuits from the chemical and volume control system, reactor coolant system, and safety injection system; as well as from other systems.

8C.5.2.2 Analysis

The Class 1E, channel D circuits are in a totally metal enclosed raceway at the bottom of the stack. Therefore they are adequately separated from other trays.

The lower of the two trays for Class 1E channel A circuits is totally metal enclosed and therefore, is adequately separated. Any fires which might start in the upper of the two trays for Class 1E channel A circuits would not propagate to the tray for the channel D circuits nor to the trays for non-Class 1E circuits. 00-01

The bottom tray for non-Class 1E circuits is totally metal enclosed and therefore, is adequately separated from other trays.

The middle tray for non-Class 1E circuits contains control circuits which do not have adequate energy to initiate a fire. Should a fire occur, it could propagate to the top tray for the Class 1E, channel A circuits and to the top tray for non-Class 1E circuits. However, this is acceptable because only one channel of Class 1E circuits would be affected and, therefore, system safety functions would be maintained.

The top tray for non-Class 1E circuits contains power circuits which potentially could initiate a fire. However, the tests have shown that such a fire is very unlikely and should such a fire occur, it would not propagate to any other trays in this configuration.

Although the preceding analysis documents that a fire barrier is not required, a barrier was installed in the Channel D control trays in compliance with the licensing commitment to provide barriers for multiple separation violations as describe in paragraph 8.3.1.4.1, Item 4. 00-01

8C.5.3 CASE NO. 073-A

8C.5.3.1 Description

1. Location

   Auxiliary Building Elevation, 388'-0" 02-01

2. Figure

   Figure 8C-3

3 Type of Area

   General plant area

4. General Description

   Trays for Class 1E circuits, channels A and B, run parallel to trays for non-Class 1E circuits, channel X. This situation exists for a distance of 20 feet. 02-01

5. Category

   Parallel - above and beside

6. Types of Trays

   Both trays for Class 1E circuits contain control circuits. Trays for non-Class 1E circuits include instrument, control, and random layed power circuits.

7. Number of Circuits

   Tray 4062 (A) - 28 control circuits

   Tray 4064 (B) - 27 control circuits

   Tray 5022 (X) - 38 instrument circuits

   Tray 4059 (X) - 106 control circuits

   Tray 3033 (X) - 49 random layed power circuits

8. Significant Circuits

   Both trays 4062 and 4064 contain circuits for the chemical and volume control system and the leak detection system, as well other systems.

8C.5.3.2 Analysis

Tray 4064 for Class 1E, channel B circuits is separated by considerably more than 5 feet vertically and 3 feet horizontally from all other trays and, therefore, is adequately separated.

Tray 4062 for Class 1E, channel A circuits is 14 inches away from tray 5022 for non-Class 1E, channel X circuits. However, tray 5022 is totally metal enclosed and, therefore, is not a hazard to tray 4062. Tray 4062 is more than 5 feet horizontally and 3 feet vertically from all other trays and therefore, is adequately separated.

8C.6 CASES ANALYZED

The following pages list the cases analyzed.

LEGEND
B = BRIDGING
C = CROSSING
D = DIAGONAL
P = PARALLEL
V = VERTICAL

NOTES:
1. FIRST 3 DIGITS ARE LAST 3 DIGITS OF CABLE TRAY DRAWING NUMBER; SERIES E-214-XXX.
2. FOR DEFINITION OF CIRCUIT CHANNEL DESIGNATIONS, SEE FSAR TABLE 8.3-4.
3. * - THESE BARRIERS WERE INCLUDED IN ORIGINAL TRAY SYSTEM DESIGN.
4. ◯ INDICATES SPECIAL NOTES - SEE SHEET SN-1.

SOUTH CAROLINA ELECTRIC & GAS COMPANY
VIRGIL C. SUMMER NUCLEAR STATION UNIT #1
ELECTRICAL
TRAY SEPARATION ANALYSIS
CONTROL BUILDING
ABOVE 425'-0"

MADE RDB | CHKD HWS | DRAWING NO. 04 4461SS-200-941 | SH. NO. 041-1 | REV D
SQ LOR RWP | ENG INTERF | GILBERT ASSOCIATES, INC. ENGINEERS AND CONSULTANTS READING, PA.
SCALE | W.O. 044461-020 | ENGINEER APPROVAL | DEPT | DATE
REV C | MADE | CH | SQL | APP | DATE | REV D | MADE | CH | SQL | APP | DATE

CASE NUMBER (NOTE 1)	DRAWING COORDINATES	CATEGORY SEE LEGEND	SITUATION (NOTE 2) (LETTERS REPRESENT CHANNEL OF CIRCUITS IN CABLE TRAYS)	VERTICAL DISTANCE	HORIZONTAL DISTANCE	BARRIER REQUIRED (NOTE 3)	REMARKS
041-A	E-11	P	M ABOVE B	2'-7"	-	YES*	
041-B	G-11	P	L ABOVE A	2'-7"	-	YES*	
041-C	F-6	P C	B BELOW X	12"	-	NO	① ⑥
041-D	H-7	C	D ABOVE X	12"	-	NO	②
		C	D ABOVE A	2'-7"	-	YES*	
041-E	E-5	P	B ABOVE E	12"	-	NO	E TOTALLY ENCLOSED
		D	B BELOW E	1'-1"	12"	NO	B TOTALLY ENCLOSED
		C	B BELOW E	1'-11"	-	YES*	
041-F	D-3	P	B BELOW X	12"	-	NO	①
041-G	H-8	P	D NEXT TO X	-	6"	NO	①
		P	D ABOVE X	12"	-	NO	②
041-H	H-12	C	B BELOW X	12"	-	NO	①
041-J	E-8	P	E BELOW X	12"	-	NO	①
041-K	C-3	P	B ABOVE X	12"	-	NO	②, ③ ⑥
041-L	E-3	P	B ABOVE E	1'-2"	-	NO	E TOTALLY ENCLOSED
041-M	H-6	P,V	D NEXT TO X	-	6"	NO	② D TOTALLY ENCLOSED
041-N	E-10	C	B BELOW X	4'-2"	-	NO	①
041-P	E-9	C	M ABOVE B	2'-7"	-	YES*	

CONSTRUCTION | BIDDING PURPOSES | RELEASED FOR | ENGR. | DATE

D

D

SOUTH CAROLINA ELECTRIC & GAS COMPANY
VIRGIL C SUMMER NUCLEAR STATION UNIT #1
ELECTRICAL
TRAY SEPARATION ANALYSIS
CONTROL BUILDING
ABOVE 425'-0"

MADE	CHKD	DRAWING NO.	SH. NO.	REV
ROB	HMS	04 4461 SS-200 941	041-2	D

SQ LDR: RWP
ENG INTERF:
GILBERT ASSOCIATES, INC.
ENGINEERS AND CONSULTANTS
READING, PA.
SCALE
W.O. 04446-020
ENGINEER APPROVAL: E.K. Kelly 4/25/77
DEPT. DATE

REV	MADE	CH	SQL	APP	DATE	REV	MADE	CH	SQL	APP	DATE
C	PH	-	-	[illegible]	9/1/8	D	PF				

LEGEND
B = BRIDGING
C = CROSSING
D = DIAGONAL
P = PARALLEL
V = VERTICAL

NOTES:
1. FIRST 3 DIGITS ARE LAST 3 DIGITS OF CABLE TRAY DRAWING NUMBER SERIES E-214 XXX
2. FOR DEFINITION OF CIRCUIT CHANNEL DESIGNATIONS SEE FSAR TABLE 8.3.4
3. * - THESE BARRIERS WERE INCLUDED IN ORIGINAL TRAY SYSTEM DESIGN
4. ◯ INDICATES SPECIAL NOTES - SEE SHEET SN 1

CASE NUMBER (NOTE 1)	DRAWING COORDINATES	CATEGORY SEE LEGEND	SITUATION (NOTE 2) (LETTERS REPRESENT CHANNEL OF CIRCUITS IN CABLE TRAYS)	VERTICAL DISTANCE	HORIZONTAL DISTANCE	BARRIER REQUIRED (NOTE 3)	REMARKS
041-Q	G-9	P	L ABOVE J	12"	-	NO	(3)
		C	L ABOVE A	2'-7"	-	NO	(2) L TOTALLY ENCLOSED
		C	J ABOVE A	12"	-	NO	(2) J TOTALLY ENCLOSED
041-R	D-11	P V	B NEXT TO X	-	8"	NO	(2), (1)
041-S	D-7	P	E BELOW X	2'-7"	-	NO	(1)
041-T	C-5	P	A NEXT TO X	-	6"	NO	(1)
041-U	E-4	P	A ABOVE X	8"	-	NO	(2)
041-V	C-5	P	B ABOVE X	12"	-	NO	(2), (3) (6)
041-W	G-5	C	B NEXT TO A	-	2'-8"	YES*	
041-X	C-4	D	B BELOW A	1'-7"	-	NO	(3)

CONSTRUCTION
BIDDING PURPOSES
RELEASED FOR
ENGR.
DATE

D

SOUTH CAROLINA ELECTRIC & GAS COMPANY
VIRGIL C. SUMMER NUCLEAR STATION UNIT #1
ELECTRICAL
TRAY SEPARATION ANALYSIS
CONTROL BUILDING
ABOVE 436' 0"

MADE	CHKD	DRAWING NO.	SH. NO.	REV
RDB	MS	04 4461 SS-200-941	042-1	C

SQ LDR: RWP
ENG INTERF:
GILBERT ASSOCIATES, INC. ENGINEERS AND CONSULTANTS READING, PA.
SCALE
W.O. 04446 1-020
ENGINEER APPROVAL: D. Kelly 0421 9/25/77
DEPT DATE

REV	MADE	CH	SQL	APP	DATE	REV	MADE	CH	SQL	APP	DATE
C	DH	-	-	RC	10/10	B					

LEGEND
B = BRIDGING
C = CROSSING
D = DIAGONAL
P = PARALLEL
V = VERTICAL

NOTES:
1. FIRST 3 DIGITS ARE LAST 3 DIGITS OF CABLE TRAY DRAWING NUMBER; SERIES E-214-XXX.
2. FOR DEFINITION OF CIRCUIT CHANNEL DESIGNATIONS, SEE FSAR TABLE 8.3-4.
3. * - THESE BARRIERS WERE INCLUDED IN ORIGINAL TRAY SYSTEM DESIGN.
4. ◯ INDICATES SPECIAL NOTES - SEE SHEET SN 1

CASE NUMBER (NOTE 1)	DRAWING COORDINATES	CATEGORY SEE LEGEND	SITUATION (NOTE 2) (LETTERS REPRESENT CHANNEL OF CIRCUITS IN CABLE TRAYS)	VERTICAL DISTANCE	HORIZONTAL DISTANCE	BARRIER REQUIRED (NOTE 3)	REMARKS
042-A	C-14	P	B ABOVE X	10"	-	NO	② X TOTALLY ENCLOSED
042-B	D-11	P V	B NEXT TO X	-	6"	NO	②.①
042-C	C 5	P	A NEXT TO X	-	6"	NO	①.②
042-D	E-4	P	A ABOVE X	8"	-	NO	②
042-E	C-5	P	A ABOVE X	8"	-	NO	②
042-F	H-6	P V	D NEXT TO X	-	6"	NO	①
042-G	D-4	C	A ABOVE X	1'-8"	-	NO	②

CONSTRUCTION
BIDDING PURPOSES
RELEASED FOR
ENGR.
DATE

SOUTH CAROLINA ELECTRIC & GAS COMPANY

VIRGIL C. SUMMER NUCLEAR STATION UNIT #1

ELECTRICAL

TRAY SEPARATION ANALYSIS

CONTROL BUILDING

ABOVE 448'-0"

MADE	CHKD	DRAWING NO.	SH. NO.	REV
RDB	HMS	011 4461 SS-200-911	043 1	C

SQ LDR: RLP

ENG INTERP:

GILBERT ASSOCIATES, INC.
ENGINEERS AND CONSULTANTS
READING, PA.

SCALE

W O 044461-020

ENGINEER APPROVAL: [signature] 0421 9/25/97

REV	MADE	CH	SQL	APP	DATE	REV	MADE	CH	SQL	APP	DATE
C	[illegible]			[illegible]	10 21 84	B				[illegible]	[illegible]

LEGEND

B = BRIDGING
C = CROSSING
D = DIAGONAL
P = PARALLEL
V = VERTICAL

NOTES:

1. FIRST 3 DIGITS ARE LAST 3 DIGITS OF CABLE TRAY DRAWING NUMBER, SERIES 6-214-XXX.
2. FOR DEFINITION OF CIRCUIT CHANNEL DESIGNATIONS, SEE FSAR TABLE 8.3-4.
3. * - THESE BARRIERS WERE INCLUDED IN ORIGINAL TRAY SYSTEM DESIGN.
4. ◯ INDICATES SPECIAL NOTES - SEE SHEET SH 1

CASE NUMBER (NOTE 1)	DRAWING COORDINATES	CATEGORY SEE LEGEND	SITUATION (NOTE 2) (LETTERS REPRESENT CHANNEL OF CIRCUITS IN CABLE TRAYS)	VERTICAL DISTANCE	HORIZONTAL DISTANCE	BARRIER REQUIRED (NOTE 3)	REMARKS
043-A	D-12	C	A ABOVE B	8"	-	YES*	
043-B	F-4	C	A NEXT TO D	-	6"	NO	②, ③
043-C	E-11	P.C	A ABOVE X	1'-3"	-	NO	②
043-D	E-8	P.C	A ABOVE X	1'-3"	-	NO	②
043-E	E-14	P	B ABOVE X	12"	-	NO	② X TOTALLY ENCLOSED
		P	B NEXT TO X	-	2'-0"	NO	① ②
		P	B NEXT TO A	-	4'-0"	NO	④
		P	A NEXT TO X	-	1'-8"	NO	①, ②
043-F	G-4	P.C	A ABOVE D	4'-5"	-	NO	D TOTALLY ENCLOSED
043-G	G-5	C	A ABOVE X	12"	-	NO	②
		P.D	A ABOVE D	4'-5"	3'-0"	NO	③ ④
		C	A BELOW X	9"	-	NO	①, ②
043-H	H-5	C	A ABOVE D	4'-5"	-	NO	③, ④
043-J	C-5	P	A BELOW X	11"	-	NO	①, ②
		P	A NEXT TO X	-	6"	NO	①, ②
043-K	D-11	P.V	B NEXT TO X	-	6"	NO	①, ②

CONSTRUCTION | BIDDING PURPOSES | RELEASED FOR | ENGR. | DATE

LEGEND

B = BRIDGING
C = CROSSING
D = DIAGONAL
P = PARALLEL
V = VERTICAL

NOTES:

1. FIRST 3 DIGITS ARE LAST 3 DIGITS OF CABLE TRAY DRAWING NUMBER, SERIES E 214 0??
2. FOR DEFINITION OF CIRCUIT CHANNEL DESIGNATIONS, SEE FSAR TABLE B 3-4
3. * - THESE BARRIERS WERE INCLUDED IN ORIGINAL TRAY SYSTEM DESIGN
4. ( ) INDICATES SPECIAL NOTES SEE SHEET SN 1

SOUTH CAROLINA ELECTRIC & GAS COMPANY
VIRGIL C. SUMMER NUCLEAR STATION UNIT #1
ELECTRICAL
TRAY SEPARATION ANALYSIS
CONTROL BUILDING
ABOVE 463'-0"

JOB 408 CNTR 1145 | DRAWING NO. 01 0461SS-200 001 | SH. NO. 001 | REV C
SO LOR KWP | ENG INTERF | GILBERT ASSOCIATES, INC. ENGINEERS AND CONSULTANTS READING, PA.
SCALE | * O 044461-070

REV	MADE	CH	SQL	ENGINEER APP	APPROVAL DATE	REV	MADE	DEPT CH	DEPT SQL	DEPT APP	DATE
C	[illegible]				7/6/98	B					9/25/98

CONSTRUCTION / BIDDING PURPOSES / RELEASED FOR — ENGR. — DATE

CASE NUMBER (NOTE 1)	DRAWING COORDINATES	CATEGORY SEE LEGEND	SITUATION (NOTE 2) (LETTERS REPRESENT CHANNEL OF CIRCUITS IN CABLE TRAYS)	VERTICAL DISTANCE	HORIZONTAL DISTANCE	BARRIER REQUIRED (NOTE 3)	REMARKS
044-A	D 4	C	A ABOVE D	12"	-	NO	(1), (2) D TOTALLY ENCLOSED
		P	A BELOW D	2'-3"	-	NO	(3), (2)
044-B	F 4	P	A BELOW D	2'-3"	-	NO	(3), (2)
		P,V	A NEXT TO D	-	12"	NO	(3), (2)
044-C	G-5	C	A ABOVE X	2'-6"	-	NO	(2)
		P	A BELOW X	12"	-	NO	(1) (2) A TOTALLY ENCLOSED
044 D	E 10	C	B NEXT TO X (X VERTICAL)	-	6"	NO	(1)
		P	B ABOVE X	12"	-	NO	(1)
		P	B BELOW X	2'-7"	-	NO	(1)

SOUTH CAROLINA ELECTRIC & GAS COMPANY

VIRGIL C SUMMER NUCLEAR STATION UNIT #1

ELECTRICAL

TRAY SEPARATION ANALYSIS

CONTROL BUILDING

ABOVE 482' 0"

DRAWING NO. 04 446 ISS-200 981 | SH. NO 045-1 | REV C

GILBERT ASSOCIATES, INC. ENGINEERS AND CONSULTANTS READING, PA.

SCALE

W.O. 044461 020

ENGINEER APPROVAL | DEPT | DATE

REV	MADE	CH	SQL	APP	DATE	REV	MADE	CH	SQL	APP	DATE
C	[illegible]	-		[illegible]	11/12	B					[illegible]

LEGEND

B = BRIDGING
C = CROSSING
D = DIAGONAL
P = PARALLEL
V = VERTICAL

NOTES:

1 FIRST 3 DIGITS ARE LAST 3 DIGITS OF CABLE TRAY DRAWING NUMBER; SERIES E-214-XXX
2 FOR DEFINITION OF CIRCUIT CHANNEL DESIGNATIONS, SEE FSAR TABLE 8.3-4
3 * THESE BARRIERS WERE INCLUDED IN ORIGINAL TRAY SYSTEM DESIGN
4 ( ) INDICATES SPECIAL NOTES SEE SHEET SN-1

CONSTRUCTION / BIDDING PURPOSES / RELEASED FOR — ENGR. — DATE

CASE NUMBER (NOTE 1)	DRAWING COORDINATES	CATEGORY SEE LEGEND	SITUATION (NOTE 2) (LETTERS REPRESENT CHANNEL OF CIRCUITS IN CABLE TRAYS)	VERTICAL DISTANCE	HORIZONTAL DISTANCE	BARRIER REQUIRED (NOTE 3)	REMARKS
045-A	F 8	C	A BELOW X	5'-0"	-	NO	(1)
045-B	C-14	C	B BELOW X	3'-4"	-	NO	(1)

C
C

SOUTH CAROLINA ELECTRIC & GAS COMPANY

VIRGIL C. SUMMER NUCLEAR STATION UNIT #1

ELECTRICAL

TRAY SEPARATION ANALYSIS

CONTROL BUILDING

ABOVE 425' 0"

MADE	CHKD	DRAWING NO.	SH. NO.	REV
[illegible]	[illegible]	04 4461 SS-200 941	047 1	C

SQ LDR: RWP

ENG INTERF:

GILBERT ASSOCIATES, INC.
ENGINEERS AND CONSULTANTS
READING, PA.

SCALE: 0444G1-020

ENGINEER APPROVAL: [illegible] 8/25/79

REV	MADE	CH	SQL	APP	DATE	REV	MADE	CH	SQL	APP	DATE
C	[illegible]		-	[illegible]	[illegible]	B				[illegible]	8/25/79

LEGEND

B = BRIDGING
C = CROSSING
D = DIAGONAL
P = PARALLEL
V = VERTICAL

NOTES

1. FIRST 3 DIGITS ARE LAST 3 DIGITS OF CABLE TRAY DRAWING NUMBER, SERIES E-214-XXX
2. FOR DEFINITION OF CIRCUIT CHANNEL DESIGNATIONS, SEE FSAR TABLE 8.3-4
3. * - THESE BARRIERS WERE INCLUDED IN ORIGINAL TRAY SYSTEM DESIGN
4. ◯ INDICATES SPECIAL NOTES SEE SHEET SH 1

CASE NUMBER (NOTE 1)	DRAWING COORDINATES	CATEGORY SEE LEGEND	SITUATION (NOTE 2) (LETTERS REPRESENT CHANNEL OF CIRCUITS IN CABLE TRAYS)	VERTICAL DISTANCE	HORIZONTAL DISTANCE	BARRIER REQUIRED (NOTE 3)	REMARKS
047-A	D 8	C	A BELOW X	3'-2"	-	NO	(1) A TOTALLY ENCLOSED
047 B	C 7	P C	A BELOW X	12"		NO	(1)
047-C	D-4	P	B BELOW X	12"	-	NO	(1)

CONSTRUCTION
BIDDING PURPOSES
RELEASED FOR
ENGR.
DATE

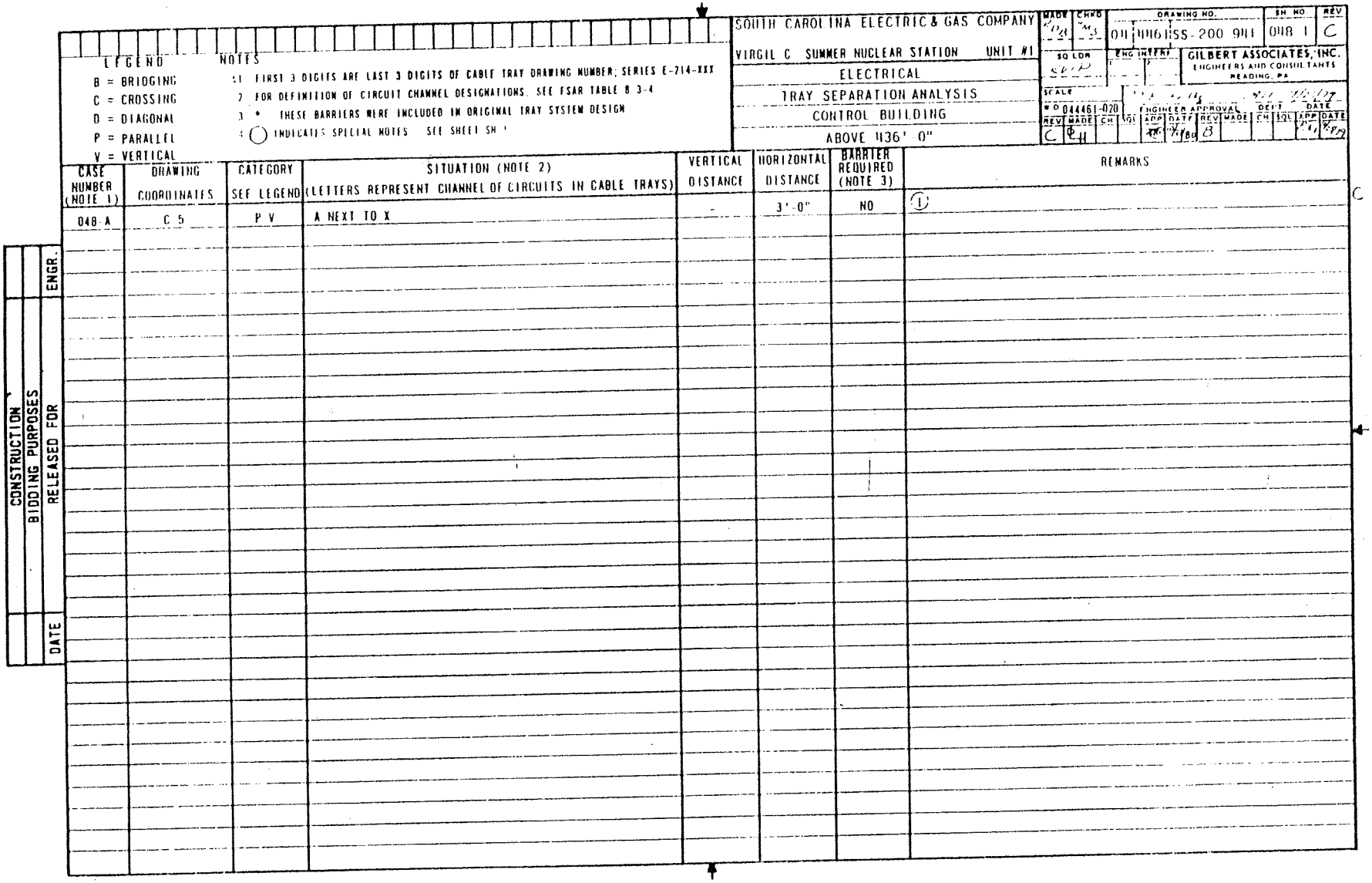

SOUTH CAROLINA ELECTRIC & GAS COMPANY

VIRGIL C SUMMER NUCLEAR STATION UNIT #1

ELECTRICAL

TRAY SEPARATION ANALYSIS

CONTROL BUILDING

ABOVE 436'-0"

MADE	CHKD	DRAWING NO.	SH NO	REV
		04 4461 SS-200 941	048 1	C

SQ LDR

ENG INTERF

GILBERT ASSOCIATES, INC.
ENGINEERS AND CONSULTANTS
READING, PA

SCALE

W.O. 044461-020

ENGINEER APPROVAL DEPT DATE

REV	MADE	CH	SQL	APP	DATE	REV	MADE	CH	SQL	APP	DATE
C						B					

LEGEND

B = BRIDGING
C = CROSSING
D = DIAGONAL
P = PARALLEL
V = VERTICAL

NOTES

1. FIRST 3 DIGITS ARE LAST 3 DIGITS OF CABLE TRAY DRAWING NUMBER; SERIES E-214-XXX
2. FOR DEFINITION OF CIRCUIT CHANNEL DESIGNATIONS, SEE FSAR TABLE 8.3-4
3. * THESE BARRIERS WERE INCLUDED IN ORIGINAL TRAY SYSTEM DESIGN
4. ◯ INDICATES SPECIAL NOTES SEE SHEET SH 1

CASE NUMBER (NOTE 1)	DRAWING COORDINATES	CATEGORY SEE LEGEND	SITUATION (NOTE 2) (LETTERS REPRESENT CHANNEL OF CIRCUITS IN CABLE TRAYS)	VERTICAL DISTANCE	HORIZONTAL DISTANCE	BARRIER REQUIRED (NOTE 3)	REMARKS
048-A	C 5	P V	A NEXT TO X	-	3'-0"	NO	1

CONSTRUCTION
BIDDING PURPOSES
RELEASED FOR
ENGR.
DATE

SOUTH CAROLINA ELECTRIC & GAS COMPANY

VIRGIL C. SUMMER NUCLEAR STATION UNIT #1

ELECTRICAL

TRAY SEPARATION ANALYSIS

CONTROL BUILDING

ABOVE 448' 0"

MADE	CHKD	DRAWING NO.	SH. NO	REV
[illegible]	[illegible]	04 446 1SS-200 941	049 1	C

SQ LDR: EWP

ENG INTERF

GILBERT ASSOCIATES, INC.
ENGINEERS AND CONSULTANTS
READING, PA

SCALE

W O 044461-020

ENGINEER APPROVAL / DEPT / DATE

REV	MADE	CH	SQL	APP	DATE	REV	MADE	CH	SQL	APP	DATE
C	[illegible]	-	-	[illegible]	[illegible]	B				[illegible]	[illegible]

LEGEND

B = BRIDGING
C = CROSSING
D = DIAGONAL
P = PARALLEL
V = VERTICAL

NOTES

1. FIRST 3 DIGITS ARE LAST 3 DIGITS OF CABLE TRAY DRAWING NUMBER, SERIES E-214-XXX
2. FOR DEFINITION OF CIRCUIT CHANNEL DESIGNATIONS, SEE FSAR TABLE 8.3-4
3. * THESE BARRIERS WERE INCLUDED IN ORIGINAL TRAY SYSTEM DESIGN
4. ◯ INDICATES SPECIAL NOTES SEE SHEET SH 1

CASE NUMBER (NOTE 1)	DRAWING COORDINATES	CATEGORY SEE LEGEND	SITUATION (NOTE 2) (LETTERS REPRESENT CHANNEL OF CIRCUITS IN CABLE TRAYS)	VERTICAL DISTANCE	HORIZONTAL DISTANCE	BARRIER REQUIRED (NOTE 3)	REMARKS
049-A	D-13	P	B NEXT TO X	-	1'-4"	NO	1
049-B	F-13	P	B NEXT TO X	-	1'-6"	NO	1

CONSTRUCTION
BIDDING PURPOSES
RELEASED FOR
ENGR.
DATE

SOUTH CAROLINA ELECTRIC & GAS COMPANY

VIRGIL C. SUMMER NUCLEAR STATION UNIT #1

ELECTRICAL

TRAY SEPARATION ANALYSIS

CONTROL BUILDING

ABOVE 448'-0"

MADE	CHKD	DRAWING NO.	SH NO.	REV
[illegible]	[illegible]	04 4461 SS-200 941	051 1	C

SQ LDR: [illegible] ENG INTERF: [illegible]

GILBERT ASSOCIATES, INC.
ENGINEERS AND CONSULTANTS
READING, PA

SCALE: [illegible] 9/25/79

W O 044461-020

REV	MADE	CH	SQL	APP	DATE	REV	MADE	CH	SQL	APP	DATE
C	[illegible]	-		[illegible]	[illegible]	3				[illegible]	[illegible]

LEGEND

B = BRIDGING
C = CROSSING
D = DIAGONAL
P = PARALLEL
V = VERTICAL

NOTES

1 FIRST 3 DIGITS ARE LAST 3 DIGITS OF CABLE TRAY DRAWING NUMBER; SERIES E-214-XXX
2 FOR DEFINITION OF CIRCUIT CHANNEL DESIGNATIONS, SEE FSAR TABLE 8.3-4.
3 * - THESE BARRIERS WERE INCLUDED IN ORIGINAL TRAY SYSTEM DESIGN.
4 ◯ INDICATES SPECIAL NOTES - SEE SHEET SH 1

CASE NUMBER (NOTE 1)	DRAWING COORDINATES	CATEGORY SEE LEGEND	SITUATION (NOTE 2) (LETTERS REPRESENT CHANNEL OF CIRCUITS IN CABLE TRAYS)	VERTICAL DISTANCE	HORIZONTAL DISTANCE	BARRIER REQUIRED (NOTE 3)	REMARKS
051-A	E-12	P	A NEXT TO X	-	12"	NO	1
		P	A NEXT TO B	-	4'-0"	NO	4 1
		P	B NEXT TO X	-	2'-0"	NO	1

CONSTRUCTION
BIDDING PURPOSES
RELEASED FOR
ENGR.
DATE

SOUTH CAROLINA ELECTRIC & GAS COMPANY

VIRGIL C. SUMMER NUCLEAR STATION UNIT #1

ELECTRICAL

TRAY SEPARATION ANALYSIS

AUXILIARY BUILDING

ABOVE 374'-0"

MADE	CHKD	DRAWING NO.	SH. NO.	REV
DB	YMS	04 4461 SS-200 941	071-1	D

SQ LOR: RWP

ENG INTERF:

GILBERT ASSOCIATES, INC.
ENGINEERS AND CONSULTANTS
READING, PA.

SCALE

W.O. 84461-020

ENGINEER APPROVAL — DEPT. — DATE: 9/28/79

REV	MADE	CH	SQL	APP	DATE	REV	MADE	CH	SQL	APP	DATE
C	CH	-	-	200	9/14/80	D	PF				

LEGEND

B = BRIDGING
C = CROSSING
D = DIAGONAL
P = PARALLEL
V = VERTICAL

NOTES:

1. FIRST 3 DIGITS ARE LAST 3 DIGITS OF CABLE TRAY DRAWING NUMBER; SERIES E-214-XXX
2. FOR DEFINITION OF CIRCUIT CHANNEL DESIGNATIONS, SEE FSAR TABLE 8.3-4.
3. * - THESE BARRIERS WERE INCLUDED IN ORIGINAL TRAY SYSTEM DESIGN
4. ◯ INDICATES SPECIAL NOTES SEE SHEET SN 1

CASE NUMBER (NOTE 1)	DRAWING COORDINATES	CATEGORY SEE LEGEND	SITUATION (NOTE 2) (LETTERS REPRESENT CHANNEL OF CIRCUITS IN CABLE TRAYS)	VERTICAL DISTANCE	HORIZONTAL DISTANCE	BARRIER REQUIRED (NOTE 3)	REMARKS
071-A	I-7	P	A ABOVE X	3'-5"	-	NO	2
071 B	F 9	P	B BELOW X	7'-11"	-	NO	1 4 2
071-C	E-9	P	B NEXT TO X	-	6"	NO	1 6 D
071-D	F-12	P	D NEXT TO X	-	6"	NO	3 6 D
071-E	G-12	C	B ABOVE X	4'-5"	-	NO	2

CONSTRUCTION
BIDDING PURPOSES
RELEASED FOR
ENGR.
DATE

SOUTH CAROLINA ELECTRIC & GAS COMPANY

VIRGIL C. SUMMER NUCLEAR STATION UNIT #1

ELECTRICAL

TRAY SEPARATION ANALYSIS

AUXILIARY BUILDING

ABOVE 388'-0"

MADE	CHKD	DRAWING NO.	SH. NO.	REV
RDB	JMS	04 4461 SS-200 941	073 1	C

SQ LDR: RWP

ENG INTERF

GILBERT ASSOCIATES, INC.
ENGINEERS AND CONSULTANTS
READING, PA.

SCALE

W.O. 044461-020

REV	MADE	CH	SQL	APP	DATE	REV	MADE	CH	SQL	APP	DATE
C	[illegible]		-	[illegible]	[illegible]	B				[illegible]	[illegible]

LEGEND

B = BRIDGING
C = CROSSING
D = DIAGONAL
P = PARALLEL
V = VERTICAL

NOTES:

1. FIRST 3 DIGITS ARE LAST 3 DIGITS OF CABLE TRAY DRAWING NUMBER; SERIES E-214-XXX
2. FOR DEFINITION OF CIRCUIT CHANNEL DESIGNATIONS, SEE FSAR TABLE 8.3-4.
3. * - THESE BARRIERS WERE INCLUDED IN ORIGINAL TRAY SYSTEM DESIGN
4. ◯ INDICATES SPECIAL NOTES SEE SHEET SH 1

CASE NUMBER (NOTE 1)	DRAWING COORDINATES	CATEGORY SEE LEGEND	SITUATION (NOTE 2) (LETTERS REPRESENT CHANNEL OF CIRCUITS IN CABLE TRAYS)	VERTICAL DISTANCE	HORIZONTAL DISTANCE	BARRIER REQUIRED (NOTE 3)	REMARKS
073-A	H-9	P	A NEXT TO X	-	12"	NO	1, 2

CONSTRUCTION
BIDDING PURPOSES
RELEASED FOR
ENGR.
DATE

SOUTH CAROLINA ELECTRIC & GAS COMPANY

VIRGIL C. SUMMER NUCLEAR STATION UNIT #1

ELECTRICAL

TRAY SEPARATION ANALYSIS

AUXILIARY BUILDING

ABOVE 397'-0"

MADE	CHKD	DRAWING NO.	SH. NO.	REV
RDB	HMS	04 4461 SS-200 941	074 1	D

SQ LDR: RWP

ENG INTERF

GILBERT ASSOCIATES, INC.
ENGINEERS AND CONSULTANTS
READING, PA.

SCALE

W.O. 844461-020

ENGINEER APPROVAL DEPT DATE

REV	MADE	CH	SQL	APP	DATE	REV	MADE	CH	SQL	APP	DATE
C	CH	-	-	[illegible]	[illegible]	D	PF				

LEGEND

B = BRIDGING
C = CROSSING
D = DIAGONAL
P = PARALLEL
V = VERTICAL

NOTES:

1. FIRST 3 DIGITS ARE LAST 3 DIGITS OF CABLE TRAY DRAWING NUMBER; SERIES E-214-XXX
2. FOR DEFINITION OF CIRCUIT CHANNEL DESIGNATIONS, SEE FSAR TABLE II.3-4.
3. * - THESE BARRIERS WERE INCLUDED IN ORIGINAL TRAY SYSTEM DESIGN
4. ◯ INDICATES SPECIAL NOTES SEE SHEET SN-1

CASE NUMBER (NOTE 1)	DRAWING COORDINATES	CATEGORY SEE LEGEND	SITUATION (NOTE 2) (LETTERS REPRESENT CHANNEL OF CIRCUITS IN CABLE TRAYS)	VERTICAL DISTANCE	HORIZONTAL DISTANCE	BARRIER REQUIRED (NOTE 3)	REMARKS
074-A	D-9	P	A NEXT TO X	-	1'-2"	NO	1
074-B	F-12	D	B ABOVE X	1'-2"	12"	NO	2 6

D

CONSTRUCTION
BIDDING PURPOSES
RELEASED FOR
ENGR.
DATE

LEGEND

B = BRIDGING
C = CROSSING
D = DIAGONAL
P = PARALLEL
V = VERTICAL

NOTES:

1. FIRST 3 DIGITS ARE LAST 3 DIGITS OF CABLE TRAY DRAWING NUMBER; SERIES E-714-XXX
2. FOR DEFINITION OF CIRCUIT CHANNEL DESIGNATIONS, SEE FSAR TABLE 8.3-4.
3. * - THESE BARRIERS WERE INCLUDED IN ORIGINAL TRAY SYSTEM DESIGN.
4. ◯ INDICATES SPECIAL NOTES SEE SHEET SN-1

SOUTH CAROLINA ELECTRIC & GAS COMPANY
VIRGIL C. SUMMER NUCLEAR STATION UNIT #1
ELECTRICAL
TRAY SEPARATION ANALYSIS
AUXILIARY BUILDING
ABOVE 412'-0"

MADE	CHKD	DRAWING NO.	SH. NO.	REV
RDB	HMS	01 4116 SS-200 911	076-1	D

SQ LOR: RWP
ENG INVEST:
GILBERT ASSOCIATES, INC. ENGINEERS AND CONSULTANTS READING, PA.
SCALE:
* 0 84461-020
ENGINEER APPROVAL: J.K. Kelly 7/31/97

REV	MADE	CH	SQL	APP	DATE	REV	MADE	CH	SQL	APP	DATE
C	PH	-	-	CP	10/1/10	D	PP				

CASE NUMBER (NOTE 1)	DRAWING COORDINATES	CATEGORY SEE LEGEND	SITUATION (NOTE 2) (LETTERS REPRESENT CHANNEL OF CIRCUITS IN CABLE TRAYS)	VERTICAL DISTANCE	HORIZONTAL DISTANCE	BARRIER REQUIRED (NOTE 3)	REMARKS
076-A	F-9	P	A NEXT TO X	-	2'-4"	NO	(1)
		D	A BELOW X	9"	1'-10"	NO	(1)
076-B	D 6	P	A NEXT TO X	-	2'-9"	NO	(1) (6)
076-C	J-9	P	A NEXT TO X	-	3'-9"	NO	(1)
		P	A BELOW X	12"	-	NO	(1)
076-D	G-9	P	A NEXT TO X	-	2'-4"	NO	(1)
		P	A BELOW X	12"	-	NO	(1)
076-E	J-4	P	B NEXT TO X	-	1'-6"	NO	(1)
076-F	G-5	P	B BELOW X	9"	-	NO	(1)

CONSTRUCTION
BIDDING PURPOSES
RELEASED FOR
ENGR.
DATE

D

SOUTH CAROLINA ELECTRIC & GAS COMPANY

VIRGIL C. SUMMER NUCLEAR STATION UNIT #1

ELECTRICAL

TRAY SEPARATION ANALYSIS

AUXILIARY BUILDING

ABOVE 412'-0"

MADE	CHKD	DRAWING NO.	SH. NO.	REV
RDB	HMJ	04 4461 SS-200 941	077 1	C

SQ LDR: RWP

ENG INTERF:

GILBERT ASSOCIATES, INC.
ENGINEERS AND CONSULTANTS
READING, PA.

SCALE

W.O. 044461-020

ENGINEER APPROVAL / DEPT / DATE

REV	MADE	CH	SQL	APP	DATE	REV	MADE	CH	SQL	APP	DATE
C	RH	-	-	[illegible]	9/1/80	B				[illegible]	9/5/79

LEGEND

B = BRIDGING
C = CROSSING
D = DIAGONAL
P = PARALLEL
V = VERTICAL

NOTES:

1. FIRST 3 DIGITS ARE LAST 3 DIGITS OF CABLE TRAY DRAWING NUMBER; SERIES F-214-XXX
2. FOR DEFINITION OF CIRCUIT CHANNEL DESIGNATIONS, SEE FSAR TABLE 8.3-4.
3. * - THESE BARRIERS WERE INCLUDED IN ORIGINAL TRAY SYSTEM DESIGN.
4. ◯ INDICATES SPECIAL NOTES SEE SHEET SN-1

CASE NUMBER (NOTE 1)	DRAWING COORDINATES	CATEGORY SEE LEGEND	SITUATION (NOTE 2) (LETTERS REPRESENT CHANNEL OF CIRCUITS IN CABLE TRAYS)	VERTICAL DISTANCE	HORIZONTAL DISTANCE	BARRIER REQUIRED (NOTE 3)	REMARKS
077-A	H-9	P	A NEXT TO X	-	6"	NO	1
077-B	G-9	P	A NEXT TO X	-	3'-3"	NO	1, 4
077-C	B-8	P	A BELOW X	12"	-	NO	1
077-D	B-8	P	A BELOW X	7'-10"	-	NO	1, 4
077-E	B-6	C	A BELOW X	1'-2"	-	NO	1
077-F	B-5	P	B NEXT TO X	-	1'-6"	NO	1
077-G	E-5	P	B NEXT TO X	-	1'-9"	NO	1
		B	X ABOVE A AND B	5"	-	NO	1 X GOES THROUGH FIRE STOP IN WALL
077-H	H-5	P	B NEXT TO X	-	6"	NO	1
077-J	H-2	P	B NEXT TO E	-	1'-2"	YES*	
		D	B BELOW E	12"	1'-2"	YES*	
077-K	G-2	P	B NEXT TO E	-	2'-6"	YES*	

CONSTRUCTION / BIDDING PURPOSES / RELEASED FOR — ENGR. / DATE

SOUTH CAROLINA ELECTRIC & GAS COMPANY

VIRGIL C. SUMMER NUCLEAR STATION UNIT #1

ELECTRICAL

TRAY SEPARATION ANALYSIS

AUXILIARY BUILDING

ABOVE 436'-0"

MADE BDG CHKD MMS | DRAWING NO. 04 4461 SS-200-941 | SH. NO. 078-1 | REV D

SQ LOG 2WP | ENG INTERF | GILBERT ASSOCIATES, INC. ENGINEERS AND CONSULTANTS READING, PA.

SCALE | J.K. Mackey 12/21 Wes/89

P.O. 04446-020 | ENGINEER APPROVAL | DEPT | DATE

REV	MADE	CH	SQL	APP	DATE	REV	MADE	CH	SQL	APP	DATE
C	PH	-	-		9/1/90	D	PF				

LEGEND

B = BRIDGING
C = CROSSING
D = DIAGONAL
P = PARALLEL
V = VERTICAL

NOTES:

1. FIRST 3 DIGITS ARE LAST 3 DIGITS OF CABLE TRAY DRAWING NUMBER; SERIES E-214-XXX.
2. FOR DEFINITION OF CIRCUIT CHANNEL DESIGNATIONS, SEE FSAR TABLE 8.3-4.
3. * - THESE BARRIERS WERE INCLUDED IN ORIGINAL TRAY SYSTEM DESIGN.
4. ◯ INDICATES SPECIAL NOTES - SEE SHEET SN-1

CONSTRUCTION BIDDING PURPOSES RELEASED FOR — ENGR. — DATE

CASE NUMBER (NOTE 1)	DRAWING COORDINATES	CATEGORY SEE LEGEND	SITUATION (NOTE 2) (LETTERS REPRESENT CHANNEL OF CIRCUITS IN CABLE TRAYS)	VERTICAL DISTANCE	HORIZONTAL DISTANCE	BARRIER REQUIRED (NOTE 3)	REMARKS
078-A	H-9	P	A BELOW X	1'-2"	-	NO	(1)
078-B	J-5	P	A ABOVE X	6'-2"	-	NO	(4)
078-C	H-6	C	A ABOVE B	5'-2"	-	NO	(4)
		C,P	B ABOVE X	3'-0"	-	NO	(5) (6) D
078-D	J-6	C	A ABOVE X	5'-2"	-	NO	(4)
		C,P	A BELOW X	3'-0"	-	NO	(1) (6) D
078-E	G-6	C,P	A ABOVE B	6'-2"	-	NO	(4)
078-F	J-6	P	A ABOVE X	6'-2"	-	NO	(4)
078-G	H-6	P	A ABOVE B	6'-2"	-	NO	(4)
078-H	F-3	P	A BELOW X	12"	-	NO	(1)
078-J	G-5	P	A BELOW X	12"	-	NO	(1)
078-K	G-7	C	A BELOW X	6"	-	NO	(1)
		P	A BELOW X	6'-3"	-	NO	(1)

SOUTH CAROLINA ELECTRIC & GAS COMPANY

VIRGIL C SUMMER NUCLEAR STATION UNIT #1

ELECTRICAL

TRAY SEPARATION ANALYSIS

AUXILIARY BUILDING

ABOVE 436'-0"

DRAWING NO. 01 446 SS-200-941 | SH. NO. 079-1 | REV. D

GILBERT ASSOCIATES, INC. ENGINEERS AND CONSULTANTS READING, PA.

W.O. 044461-020

LEGEND

B = BRIDGING
C = CROSSING
D = DIAGONAL
P = PARALLEL
V = VERTICAL

NOTES:

1. FIRST 3 DIGITS ARE LAST 3 DIGITS OF CABLE TRAY DRAWING NUMBER, SERIES E-214 XXX
2. FOR DEFINITION OF CIRCUIT CHANNEL DESIGNATIONS, SEE FSAR TABLE 8.3-4
3. * - THESE BARRIERS WERE INCLUDED IN ORIGINAL TRAY SYSTEM DESIGN
4. ( ) INDICATES SPECIAL NOTES - SEE SHEET SH 1

CASE NUMBER (NOTE 1)	DRAWING COORDINATES	CATEGORY SEE LEGEND	SITUATION (NOTE 2) (LETTERS REPRESENT CHANNEL OF CIRCUITS IN CABLE TRAYS)	VERTICAL DISTANCE	HORIZONTAL DISTANCE	BARRIER REQUIRED (NOTE 3)	REMARKS
079-A	G-12	C	B NEXT TO X (B VERTICAL)	-	3'-9"	NO	(1) (4)
079-B	E-12	C	B NEXT TO X (B VERTICAL)	-	3'-9"	NO	(1) (4)
079-C	D-9	P	A BELOW X	1'-10"	-	NO	(1)
		P	A NEXT TO X	-	6"	NO	(3)
079-D	B-9	P	A BELOW X	1'-2"	-	NO	(1)
079-E	G-9	P	A BELOW X	11"	-	NO	(1)
		P	A NEXT TO X	-	6"	NO	(3) (6)
079-I	F-6	C	A ABOVE X	10"	-	NO	(5)
079-G	D-6	P	A NEXT TO X	-	2'-0"	NO	(1)
079-H	D-6	C	A ABOVE X	2'-1"	-	NO	(5) (6)
079-J	C-6	D	A ABOVE X	5"	6"	NO	(5) (6)

CONSTRUCTION
BIDDING PURPOSES
RELEASED FOR
ENGR.
DATE

D
D
D

SOUTH CAROLINA ELECTRIC & GAS COMPANY

VIRGIL C. SUMMER NUCLEAR STATION UNIT #1

ELECTRICAL

TRAY SEPARATION ANALYSIS

AUXILIARY BUILDING

ABOVE 463'-0"

MADE	CHKD	DRAWING NO.	SH. NO.	REV
RDB	HMS	04 4461 SS-200-941	080-1	D

SQ LDR: RWP

ENG INTERF

GILBERT ASSOCIATES, INC.
ENGINEERS AND CONSULTANTS
READING, PA.

SCALE

W.O. 04446 1-020

ENGINEER APPROVAL / DEPT / DATE

REV	MADE	CH	SQL	APP	DATE	REV	MADE	CH	SQL	APP	DATE
L	[illegible]	-	-	[illegible]	[illegible]	D	PF				

LEGEND

B = BRIDGING
C = CROSSING
D = DIAGONAL
P = PARALLEL
V = VERTICAL

NOTES:-

1. FIRST 3 DIGITS ARE LAST 3 DIGITS OF CABLE TRAY DRAWING NUMBER; SERIES E-214-XXX
2. FOR DEFINITION OF CIRCUIT CHANNEL DESIGNATIONS, SEE FSAR TABLE 8.3-4.
3. * - THESE BARRIERS WERE INCLUDED IN ORIGINAL TRAY SYSTEM DESIGN.
4. ◯ INDICATES SPECIAL NOTES - SEE SHEET SN-1.

CASE NUMBER (NOTE 1)	DRAWING COORDINATES	CATEGORY SEE LEGEND	SITUATION (NOTE 2) (LETTERS REPRESENT CHANNEL OF CIRCUITS IN CABLE TRAYS)	VERTICAL DISTANCE	HORIZONTAL DISTANCE	BARRIER REQUIRED (NOTE 3)	REMARKS
080-A	J-12	P	B BELOW X	12"	-	NO	1
		P	B ABOVE X	8"	-	NO	5
		P	B NEXT TO X	-	3'-3"	NO	1, 4
080-B	F-12	P	B ABOVE X	8"	-	NO	5
		P	B BELOW X	12"	-	NO	1
080-C	E-10	P	B ABOVE X	8"	-	NO	5
		P	B BELOW X	12"	-	NO	1
		D	B NEXT TO X	2'-1"	4'-8"	NO	1, 4
080-D	D-6	P	B ABOVE X	8"	-	NO	5
		P	B BELOW X	12"	-	NO	1 6
080-E	K-8	P	D NEXT TO L	-	8"	NO	3 6

CONSTRUCTION
BIDDING PURPOSES
RELEASED FOR
ENGR.
DATE

D

D

SOUTH CAROLINA ELECTRIC & GAS COMPANY
VIRGIL C. SUMMER NUCLEAR STATION UNIT #1
ELECTRICAL
TRAY SEPARATION ANALYSIS
AUXILIARY BUILDING
ABOVE 463' 0"

MADE	CHKD	DRAWING NO.	SH. NO.	REV
RDB	HMS	04 4461 SS-200-911	081-1	D

SQ LDR: RWP — ENG INTERF — GILBERT ASSOCIATES, INC. ENGINEERS AND CONSULTANTS READING, PA.
SCALE — P.K. Kelly 1971 9/21/79
W.O. 044461-020 — ENGINEER APPROVAL — DEPT — DATE

REV	MADE	CH	SQL	APP	DATE	REV	MADE	CH	SQL	APP	DATE
C	EH		-	[illegible]	9/11/79	D	PF				

LEGEND
B = BRIDGING
C = CROSSING
D = DIAGONAL
P = PARALLEL
V = VERTICAL

NOTES:
1. FIRST 3 DIGITS ARE LAST 3 DIGITS OF CABLE TRAY DRAWING NUMBER; SERIES E-214-XXX
2. FOR DEFINITION OF CIRCUIT CHANNEL DESIGNATIONS, SEE FSAR TABLE 8.3-4.
3. * - THESE BARRIERS WERE INCLUDED IN ORIGINAL TRAY SYSTEM DESIGN.
4. ◯ INDICATES SPECIAL NOTES - SEE SHEET SN-1.

CONSTRUCTION — BIDDING PURPOSES — RELEASED FOR — ENGR. — DATE

CASE NUMBER (NOTE 1)	DRAWING COORDINATES	CATEGORY SEE LEGEND	SITUATION (NOTE 2) (LETTERS REPRESENT CHANNEL OF CIRCUITS IN CABLE TRAYS)	VERTICAL DISTANCE	HORIZONTAL DISTANCE	BARRIER REQUIRED (NOTE 3)	REMARKS
081-A	H-13	P	D NEXT TO X	-	3"	NO	①, ② D TOTALLY ENCLOSED
		P	D ABOVE A	11"	-	NO	③
		P	A NEXT TO X	-	3"	NO	①, ②, ③ ⑥ D
081-B	G-16	P	B ABOVE X	8"	-	NO	⑤
		P	B NEXT TO X	-	7"	NO	①
		P	B BELOW X	1'-1"	-	NO	①
081-C	F-14	P	B ABOVE X	8"	-	NO	⑤
		P	B BELOW X	12"	-	NO	①
081-D	D-12	P	B BELOW X	12"	-	NO	①
		P	B ABOVE X	11"	-	NO	⑤
		P	D BELOW X	12"	-	NO	①, ② D TOTALLY ENCLOSED
081-E	E-12	P	B BELOW X	12"	-	NO	①
		P	B ABOVE X	8"	-	NO	⑤
		P	D BELOW X	12"	-	NO	①, ② D TOTALLY ENCLOSED
081-F	B-12	C	B BELOW X	3"	-	NO	①, ②
			B ABOVE X	10"	-	NO	⑤
			D BELOW X	12"	-	NO	①, ② D TOTALLY ENCLOSED
081-G	B-12	P	B BELOW X	12"	-	NO	①
		P	B ABOVE X	10"	-	NO	⑤
081-H	B-10	P	D BELOW X	12"	-	NO	①
		P	D NEXT TO X	-	6"	NO	③ ⑥ D
081-J	B-8	P	D NEXT TO X	-	6"	NO	③ ⑥ D

SOUTH CAROLINA ELECTRIC & GAS COMPANY
VIRGIL C. SUMMER NUCLEAR STATION UNIT #1
ELECTRICAL
TRAY SEPARATION ANALYSIS
AUXILIARY BUILDING
ABOVE 463'-0"

MADE	CHKD	DRAWING NO.	SH. NO.	REV
RDB	HMS	04 4461 SS-200 941	081 2	C

SQ LDR: RWP
ENG INTERF.
GILBERT ASSOCIATES, INC. ENGINEERS AND CONSULTANTS READING, PA.
SCALE
W.O. 044461-020
ENGINEER APPROVAL DEPT DATE
REV C MADE CH SQL APP DATE REV B MADE CH SQL APP DATE

LEGEND
B = BRIDGING
C = CROSSING
D = DIAGONAL
P = PARALLEL
V = VERTICAL

NOTES:
1. FIRST 3 DIGITS ARE LAST 3 DIGITS OF CABLE TRAY DRAWING NUMBER; SERIES E-214-XXX.
2. FOR DEFINITION OF CIRCUIT CHANNEL DESIGNATIONS, SEE FSAR TABLE 8.3-4.
3. * - THESE BARRIERS WERE INCLUDED IN ORIGINAL TRAY SYSTEM DESIGN
4. ◯ INDICATES SPECIAL NOTES - SEE SHEET SN-1

CASE NUMBER (NOTE 1)	DRAWING COORDINATES	CATEGORY SEE LEGEND	SITUATION (NOTE 2) (LETTERS REPRESENT CHANNEL OF CIRCUITS IN CABLE TRAYS)	VERTICAL DISTANCE	HORIZONTAL DISTANCE	BARRIER REQUIRED (NOTE 3)	REMARKS
081-K	G-9	P V	A NEXT TO X	-	3"	NO	1
081-L	G-10	P	A NEXT TO X	-	3'-2"	NO	1
		C	A BELOW X	1'-5"	-	NO	1
081-M	D-8	V	A ABOVE X	4'-0"	-	NO	5
081-N	G-12	C	B ABOVE X	10"	-	NO	5
		D	B ABOVE D	2'-1"	3"	NO	1, 2, D TOTALLY ENCLOSED
		D	D ABOVE A	11"	2'-0"	NO	BOTH TRAYS TOTALLY ENCLOSED

CONSTRUCTION
BIDDING PURPOSES
RELEASED FOR
ENGR.
DATE

SOUTH CAROLINA ELECTRIC & GAS COMPANY
VIRGIL C. SUMMER NUCLEAR STATION UNIT #1
ELECTRICAL
TRAY SEPARATION ANALYSIS
REACTOR BUILDING
ABOVE 412'-0"

MADE RDB CHKD HMS | DRAWING NO. 04 4461 SS-200-941 | SH. NO. 101-1 | REV D
SQ LDR KWP | ENG INTERF | GILBERT ASSOCIATES, INC. ENGINEERS AND CONSULTANTS READING, PA.
SCALE | W.O. 044461-020 | ENGINEER APPROVAL | DEPT | DATE
REV C MADE TPH CH - SQL - APP DATE 4/4/8 REV D MADE PF CH SQL APP DATE

LEGEND
B = BRIDGING
C = CROSSING
D = DIAGONAL
P = PARALLEL
V = VERTICAL

NOTES:
1. FIRST 3 DIGITS ARE LAST 3 DIGITS OF CABLE TRAY DRAWING NUMBER; SERIES E-214-XXX
2. FOR DEFINITION OF CIRCUIT CHANNEL DESIGNATIONS, SEE FSAR TABLE 8.3-4.
3. * - THESE BARRIERS WERE INCLUDED IN ORIGINAL TRAY SYSTEM DESIGN.
4. ◯ INDICATES SPECIAL NOTES - SEE SHEET SH-1

CASE NUMBER (NOTE 1)	DRAWING COORDINATES	CATEGORY SEE LEGEND	SITUATION (NOTE 2) (LETTERS REPRESENT CHANNEL OF CIRCUITS IN CABLE TRAYS)	VERTICAL DISTANCE	HORIZONTAL DISTANCE	BARRIER REQUIRED (NOTE 3)	REMARKS
101-A	D-7	P	B ABOVE E	12"	-	NO	③
		P	E NEXT TO X	-	6"	NO	①.② ⑥
		P	B NEXT TO X	-	6"	NO	①.②
		P	B ABOVE X	12"	-	NO	②
101-B	K-9	P	B ABOVE E	1'-7"	-	NO	③
		C	B BELOW X	1'-3"	-	NO	①.②
		P	E NEXT TO X	-	6"	NO	① ②
		P	B NEXT TO X	-	6"	NO	①.②
		P	B ABOVE X	1'-7"	-	NO	②
101-C	K-10	P	B ABOVE E	6"	-	NO	③
		P	E NEXT TO X	-	6"	NO	①.②
		C	B ABOVE X	6"	-	NO	②
		P	B ABOVE X	1'-7"	-	NO	②
		P	B NEXT TO X	-	6"	NO	①
101-D	K-12	C	B ABOVE X	6"	-	NO	③ ⑥
		P	B ABOVE E	1'-7"	-	NO	③ ⑥
		C	E BELOW X	6"	-	NO	③ ⑥
		P	E NEXT TO X	-	6"	NO	①.② ⑥
		P	B ABOVE X	1'-7"	-	NO	②
		P	B NEXT TO X	-	6"	NO	①
101-E	H-14	P	B ABOVE E	1'-7"	-	NO	③ ⑥
		P	E NEXT TO X	-	6"	NO	①.② ⑥
		P	B ABOVE X	1'-7"	-	NO	②
		P	B NEXT TO X	-	6"	NO	①.②

CONSTRUCTION
BIDDING PURPOSES
RELEASED FOR
ENGR.
DATE

SOUTH CAROLINA ELECTRIC & GAS COMPANY

VIRGIL C. SUMMER NUCLEAR STATION UNIT #1

ELECTRICAL

TRAY SEPARATION ANALYSIS

REACTOR BUILDING

ABOVE 412'-0"

MADE	CHKD	DRAWING NO.	SH. NO.	REV
DB	HMS	04 4461 SS-200-941	101 2	D

SQ LDR: RWP

ENG INTERP

GILBERT ASSOCIATES, INC.
ENGINEERS AND CONSULTANTS
READING, PA.

SCALE

W.O. 04446 1-070

ENGINEER APPROVAL — DEPT. — DATE

REV	MADE	CH	SQL	APP	DATE	REV	MADE	CH	SQL	APP	DATE
C	LP	–	–	[illegible]	9/2/80	D	PF				

LEGEND

B = BRIDGING
C = CROSSING
D = DIAGONAL
P = PARALLEL
V = VERTICAL

NOTES:-

1. FIRST 3 DIGITS ARE LAST 3 DIGITS OF CABLE TRAY DRAWING NUMBER; SERIES E-214-XXX.
2. FOR DEFINITION OF CIRCUIT CHANNEL DESIGNATIONS, SEE FSAR TABLE 8.3-4.
3. * - THESE BARRIERS WERE INCLUDED IN ORIGINAL TRAY SYSTEM DESIGN.
4. INDICATES SPECIAL NOTES - SEE SHEET SN-1

CASE NUMBER (NOTE 1)	DRAWING COORDINATES	CATEGORY SEE LEGEND	SITUATION (NOTE 2) (LETTERS REPRESENT CHANNEL OF CIRCUITS IN CABLE TRAYS)	VERTICAL DISTANCE	HORIZONTAL DISTANCE	BARRIER REQUIRED (NOTE 3)	REMARKS
101-F	F-15	P	E BELOW X	12"	-	NO	1 6
		P	E NEXT TO X	-	1'-3"	NO	3 6
		P	B NEXT TO E	-	1'-6"	NO	3
		P	B NEXT TO X	-	12"	NO	1 2
		C	B BELOW X	1'-10"	-	NO	1 6
101-G	C-15	P	B BELOW X	10"	-	NO	1 6
		P	B NEXT TO E	-	9"	NO	3
		P	E NEXT TO X	-	1'-6"	NO	1 6
		P	E BELOW X	2'-5"	-	NO	1 6

D D D D D D

CONSTRUCTION
BIDDING PURPOSES
RELEASED FOR
ENGR.
DATE

SOUTH CAROLINA ELECTRIC & GAS COMPANY
VIRGIL C. SUMMER NUCLEAR STATION . UNIT #1
ELECTRICAL
TRAY SEPARATION ANALYSIS
REACTOR BUILDING
ABOVE 436'-0"

MADE	CHKD	DRAWING NO.	SH. NO.	REV
RDB	HMS	04 4461 SS-200 941	102 1	D.

SO LDR: RWP
ENG INTERF:
GILBERT ASSOCIATES, INC. ENGINEERS AND CONSULTANTS READING, PA.
SCALE
P.O. 04446 -020
ENGINEER APPROVAL DEPT DATE 9/25/79

REV	MADE	CH	SQL	APP	DATE	REV	MADE	CH	SQL	APP	DATE
C	PH	-	-	[illegible]	7/11/78	D	PF				

LEGEND
B = BRIDGING
C = CROSSING
D = DIAGONAL
P = PARALLEL
V = VERTICAL

NOTES:-
1. FIRST 3 DIGITS ARE LAST 3 DIGITS OF CABLE TRAY DRAWING NUMBER; SERIES E-214-XXX.
2. FOR DEFINITION OF CIRCUIT CHANNEL DESIGNATIONS, SEE FSAR TABLE 8.3-4.
3. * - THESE BARRIERS WERE INCLUDED IN ORIGINAL TRAY SYSTEM DESIGN.
4. ◯ INDICATES SPECIAL NOTES - SEE SHEET SN-1

CASE NUMBER (NOTE 1)	DRAWING COORDINATES	CATEGORY SEE LEGEND	SITUATION (NOTE 2) (LETTERS REPRESENT CHANNEL OF CIRCUITS IN CABLE TRAYS)	VERTICAL DISTANCE	HORIZONTAL DISTANCE	BARRIER REQUIRED (NOTE 3)	REMARKS
102-A	F-7	P	A NEXT TO X	-	12"	NO	1
		P	A ABOVE D	12"	-	NO	3
		P	D NEXT TO X	-	1'-3"	NO	3 6
102-B	C-14	P	A NEXT TO X	-	6"	NO	1
		P	A ABOVE D	1'-2"	-	NO	3
		P	D NEXT TO X	-	6"	NO	3 6
102-C	F-15	C	D ABOVE X	1'-2"	-	NO	3 6
		C	D BELOW X	1'-5"	-	NO	1, 2 6
		C	A ABOVE D	2'-6".	-	NO	3
		P	A NEXT TO X	-	2'-9"	NO	1
102-D	H-15	P	A BELOW X	8"	-	NO	1, 2
		P	A ABOVE D	8"	-	NO	2, D TOTALLY ENCLOSED
		P	A NEXT TO D	-	6"	NO	3
102-E	K-10	P	A NEXT TO X	-	1'-2"	NO	1
		P	A ABOVE D	12"	-	NO	3
		P	D NEXT TO X	-	1'-5"	NO	3

CONSTRUCTION
BIDDING PURPOSES
RELEASED FOR
ENGR.
DATE

D
D
D
D

SOUTH CAROLINA ELECTRIC & GAS COMPANY
VIRGIL C. SUMMER NUCLEAR STATION UNIT #1
ELECTRICAL
TRAY SEPARATION ANALYSIS
INTERMEDIATE BUILDING
ABOVE 412'-0"

MADE	CHKD	DRAWING NO.	SH. NO.	REV
KDB	HMS	04 4461 SS-200-941	131-1	C

SQ LDR: RWP
ENG INTERF:
GILBERT ASSOCIATES, INC. ENGINEERS AND CONSULTANTS READING, PA.
SCALE: 0421 7/21/79
044461-020
ENGINEER APPROVAL / DEPT / DATE

REV	MADE	CH	SQL	APP	DATE	REV	MADE	CH	SQL	APP	DATE
C	[illegible]	-	-	[illegible]	[illegible]	B				[illegible]	[illegible]

LEGEND
B = BRIDGING
C = CROSSING
D = DIAGONAL
P = PARALLEL
V = VERTICAL

NOTES:
1. FIRST 3 DIGITS ARE LAST 3 DIGITS OF CABLE TRAY DRAWING NUMBER; SERIES E-214-XXX
2. FOR DEFINITION OF CIRCUIT CHANNEL DESIGNATIONS, SEE FSAR TABLE 8.3-4.
3. * - THESE BARRIERS WERE INCLUDED IN ORIGINAL TRAY SYSTEM DESIGN.
4. ◯ INDICATES SPECIAL NOTES - SEE SHEET SN-1

CASE NUMBER (NOTE 1)	DRAWING COORDINATES	CATEGORY SEE LEGEND	SITUATION (NOTE 2) (LETTERS REPRESENT CHANNEL OF CIRCUITS IN CABLE TRAYS)	VERTICAL DISTANCE	HORIZONTAL DISTANCE	BARRIER REQUIRED (NOTE 3)	REMARKS
131-A	D-16	P	B ABOVE X	12"	-	NO	(3)
		P	B NEXT TO X	-	6"	NO	(1), (2)
		P	B BELOW X	12"	-	NO	(1), (2)
131-B	E-15	P	B ABOVE E	1'-2"	-	NO	E TOTALLY ENCLOSED
		P	B NEXT TO E	-	1'-3"	NO	E TOTALLY ENCLOSED
131-C	D-14	P	B ABOVE E	1'-2"	-	NO	E TOTALLY ENCLOSED
		P	B NEXT TO E	-	1'-3"	NO	E TOTALLY ENCLOSED
		P P	B ABOVE X B NEXT TO X	1'-7"	- 6"	NO NO	(2) (1), (2)
131-D	C-13	P	B NEXT TO X	-	6"	NO	(1)
		D	B ABOVE X	12"	6"	NO	(5)
		D	B BELOW X	12"	6"	NO	(1)
131-E	C-11	P	B NEXT TO E	-	1'-3"	NO	E TOTALLY ENCLOSED
		D	B BELOW E	12"	1'-3"	NO	E TOTALLY ENCLOSED
131-F	E-12	P	B ABOVE E	1'-2"	-	NO	E TOTALLY ENCLOSED
		P	B NEXT TO E	-	1'-2"	NO	E TOTALLY ENCLOSED
131-G	E-10	P	B ABOVE E	3'-3"	-	NO	E TOTALLY ENCLOSED
		C	B ABOVE E	12"	-	NO	E TOTALLY ENCLOSED
131-H	D-7	P	B ABOVE X	2'-5"	-	NO	X TOTALLY ENCLOSED
		P	B NEXT TO X	-	6"	NO	(1), X TOTALLY ENCLOSED
131-J	F-13	C	B BELOW X	3"	-	NO	
		C	B ABOVE X	4"	-	NO	

CONSTRUCTION
BIDDING PURPOSES
RELEASED FOR
ENGR.
DATE

SOUTH CAROLINA ELECTRIC & GAS COMPANY
VIRGIL C. SUMMER NUCLEAR STATION UNIT #1
ELECTRICAL
TRAY SEPARATION ANALYSIS
INTERMEDIATE BUILDING
ABOVE 412'-0"

MADE	CHKD	DRAWING NO.	SH. NO.	REV
RDB	HMS	04 4461 SS-200-941	131 2	D

SQ LDR: RWP
ENG INTERP:
GILBERT ASSOCIATES, INC. ENGINEERS AND CONSULTANTS READING, PA.
SCALE
W.O. 04446 1-020
ENGINEER APPROVAL: D. H. Jeeby 0421 9/25/97
DEPT DATE

REV	MADE	CH	SQL	APP	DATE	REV	MADE	CH	SQL	APP	DATE
C	PH	-	-	[illegible]	10/1/90	D	PF				

LEGEND
B = BRIDGING
C = CROSSING
D = DIAGONAL
P = PARALLEL
V = VERTICAL

NOTES:
1. FIRST 3 DIGITS ARE LAST 3 DIGITS OF CABLE TRAY DRAWING NUMBER; SERIES E-214-XXX.
2. FOR DEFINITION OF CIRCUIT CHANNEL DESIGNATIONS, SEE FSAR TABLE 8.3-4.
3. * - THESE BARRIERS WERE INCLUDED IN ORIGINAL TRAY SYSTEM DESIGN.
4. ◯ INDICATES SPECIAL NOTES - SEE SHEET SN-1

CASE NUMBER (NOTE 1)	DRAWING COORDINATES	CATEGORY SEE LEGEND	SITUATION (NOTE 2) (LETTERS REPRESENT CHANNEL OF CIRCUITS IN CABLE TRAYS)	VERTICAL DISTANCE	HORIZONTAL DISTANCE	BARRIER REQUIRED (NOTE 3)	REMARKS
131-K	G-11	C	B ABOVE X	5"	-	NO	5
131-L	G-7	P	A ABOVE X	10"	-	NO	5
		P	A NEXT TO X	-	8"	NO	1
		D	A ABOVE X	10"	8"	NO	5 6
131-M	J-10	C,D	A BELOW C	6"	2'-3"	YES*	
131-N	J-7	C,V	A BELOW X (X VERTICAL)	6"	-	NO	1
		P	A NEXT TO X	-	6"	NO	1

D

CONSTRUCTION
BIDDING PURPOSES
RELEASED FOR
ENGR.
DATE

SOUTH CAROLINA ELECTRIC & GAS COMPANY

VIRGIL C. SUMMER NUCLEAR STATION UNIT #1

ELECTRICAL

TRAY SEPARATION ANALYSIS

INTERMEDIATE BUILDING

ABOVE 412'-0"

MADE	CHKD	DRAWING NO.	SH. NO.	REV
RDB	HMS	04 4461 SS-200-941	132 1	C

SQ LDR: RWP

ENG INTERP

GILBERT ASSOCIATES, INC.
ENGINEERS AND CONSULTANTS
READING, PA.

SCALE

W.O. 04446 1-020

ENGINEER APPROVAL DEPT DATE

REV	MADE	CH	SQL	APP	DATE	REV	MADE	CH	SQL	APP	DATE
C	RH			[illegible]	10/11/80	B				[illegible]	[illegible]

LEGEND

B = BRIDGING
C = CROSSING
D = DIAGONAL
P = PARALLEL
V = VERTICAL

NOTES:

1. FIRST 3 DIGITS ARE LAST 3 DIGITS OF CABLE TRAY DRAWING NUMBER; SERIES E-214-XXX
2. FOR DEFINITION OF CIRCUIT CHANNEL DESIGNATIONS, SEE FSAR TABLE 8.3-4.
3. * - THESE BARRIERS WERE INCLUDED IN ORIGINAL TRAY SYSTEM DESIGN.

/ ◯ INDICATES SPECIAL NOTES - SEE SHEET SN-1

CASE NUMBER (NOTE 1)	DRAWING COORDINATES	CATEGORY SEE LEGEND	SITUATION (NOTE 2) (LETTERS REPRESENT CHANNEL OF CIRCUITS IN CABLE TRAYS)	VERTICAL DISTANCE	HORIZONTAL DISTANCE	BARRIER REQUIRED (NOTE 3)	REMARKS
132-A	J-11	C	A BELOW X	4"	-	NO	1
		C	A ABOVE X	10"	-	NO	5
132-B	F-11	P	B ABOVE X	1'-10"	-	NO	2. X TOTALLY ENCLOSED
		P	B NEXT TO X	-	6"	NO	1. 2

CONSTRUCTION
BIDDING PURPOSES
RELEASED FOR
ENGR.
DATE

SOUTH CAROLINA ELECTRIC & GAS COMPANY
VIRGIL C. SUMMER NUCLEAR STATION UNIT #1
ELECTRICAL
TRAY SEPARATION ANALYSIS
INTERMEDIATE BUILDING
ABOVE 436' 0"

MADE	CHKD	DRAWING NO.	SH. NO	REV
RDB	MS	04 4461 SS-200 941	133-1	C

SQ LDR: RWP
ENG INTERF:
GILBERT ASSOCIATES, INC. ENGINEERS AND CONSULTANTS READING, PA.
SCALE
W.O. 044461-020
ENGINEER APPROVAL: D. K. Kelly 7/25/79
DEPT
DATE

REV	MADE	CH	SQL	APP	DATE	REV	MADE	CH	SQL	APP	DATE
C	RH		-		7/11/79	B					7/24/79

LEGEND
B = BRIDGING
C = CROSSING
D = DIAGONAL
P = PARALLEL
V = VERTICAL

NOTES:
1. FIRST 3 DIGITS ARE LAST 3 DIGITS OF CABLE TRAY DRAWING NUMBER; SERIES E-214-XXX
2. FOR DEFINITION OF CIRCUIT CHANNEL DESIGNATIONS, SEE FSAR TABLE 8.3-4
3. * - THESE BARRIERS WERE INCLUDED IN ORIGINAL TRAY SYSTEM DESIGN.
4. ◯ INDICATES SPECIAL NOTES - SEE SHEET SN 1

CASE NUMBER (NOTE 1)	DRAWING COORDINATES	CATEGORY SEE LEGEND	SITUATION (NOTE 2) (LETTERS REPRESENT CHANNEL OF CIRCUITS IN CABLE TRAYS)	VERTICAL DISTANCE	HORIZONTAL DISTANCE	BARRIER REQUIRED (NOTE 3)	REMARKS
133-A	H-10	C V	A NEXT TO X (A VERTICAL)	-	2'-6"	NO	(1)
		C	A BELOW X	10"	-	NO	(1)
133-B	H-13	C,V	A NEXT TO X (A VERTICAL)	-	1'-2"	NO	X TOTALLY ENCLOSED
133-C	E-14	C	A ABOVE X	7"	-	NO	(5)

CONSTRUCTION
BIDDING PURPOSES
RELEASED FOR
ENGR.
DATE

SOUTH CAROLINA ELECTRIC & GAS COMPANY

VIRGIL C. SUMMER NUCLEAR STATION UNIT #1

ELECTRICAL

TRAY SEPARATION ANALYSIS

INTERMEDIATE BUILDING

ABOVE 463'-0"

MADE	CHKD	DRAWING NO.	SH. NO.	REV
DB		04 4461 SS-200 941	135-1	C

SQ LDR: RWP

ENG INTERF

GILBERT ASSOCIATES, INC.
ENGINEERS AND CONSULTANTS
READING, PA.

SCALE

W.O. 04446-020

ENGINEER APPROVAL — DEPT — DATE

REV	MADE	CH	SQL	APP	DATE	REV	MADE	CH	SQL	APP	DATE
C	PH										

LEGEND

B = BRIDGING
C = CROSSING
D = DIAGONAL
P = PARALLEL
V = VERTICAL

NOTES:

1. FIRST 3 DIGITS ARE LAST 3 DIGITS OF CABLE TRAY DRAWING NUMBER; SERIES E-214-XXX
2. FOR DEFINITION OF CIRCUIT CHANNEL DESIGNATIONS, SEE FSAR TABLE 8.3-4.
3. * - THESE BARRIERS WERE INCLUDED IN ORIGINAL TRAY SYSTEM DESIGN.
4. ◯ INDICATES SPECIAL NOTES - SEE SHEET SN-1

CASE NUMBER (NOTE 1)	DRAWING COORDINATES	CATEGORY SEE LEGEND	SITUATION (NOTE 2) (LETTERS REPRESENT CHANNEL OF CIRCUITS IN CABLE TRAYS)	VERTICAL DISTANCE	HORIZONTAL DISTANCE	BARRIER REQUIRED (NOTE 3)	REMARKS
135-A	J-14	P	A BELOW X	12"	-	NO	1
		C	A BELOW X	12"	-	NO	1
135-B	G 14	P	A ABOVE X	12'	-	NO	5
		P	A BELOW X	1'-3"	-	NO	1

CONSTRUCTION
BIDDING PURPOSES
RELEASED FOR
ENGR.
DATE

SOUTH CAROLINA ELECTRIC & GAS COMPANY
VIRGIL C. SUMMER NUCLEAR STATION UNIT #1
ELECTRICAL
TRAY SEPARATION ANALYSIS
PENETRATION ACCESS AREA
ABOVE 412'-0"

MADE	CHKD	DRAWING NO.	SH. NO.	REV
RDB	KMS	04 446 ISS-200 941	141 1	C

SQ LDR: RWP
ENG INTERP:
GILBERT ASSOCIATES, INC.
ENGINEERS AND CONSULTANTS
READING, PA.
SCALE
W.O. 04446-070
ENGINEER APPROVAL DEPT DATE

REV	MADE	CH	SQL	APP	DATE	REV	MADE	CH	SQL	APP	DATE
C	[illegible]	-	-	[illegible]	4/11/8	B				[illegible]	4/11/9

LEGEND
B = BRIDGING
C = CROSSING
D = DIAGONAL
P = PARALLEL
V = VERTICAL

NOTES:
1 FIRST 3 DIGITS ARE LAST 3 DIGITS OF CABLE TRAY DRAWING NUMBER; SERIES E-214-XXX
2 FOR DEFINITION OF CIRCUIT CHANNEL DESIGNATIONS, SEE FSAR TABLE 8.3-4.
3 * - THESE BARRIERS WERE INCLUDED IN ORIGINAL TRAY SYSTEM DESIGN.
4 ◯ INDICATES SPECIAL NOTES - SEE SHEET SN-1

CASE NUMBER (NOTE 1)	DRAWING COORDINATES	CATEGORY SEE LEGEND	SITUATION (NOTE 2) (LETTERS REPRESENT CHANNEL OF CIRCUITS IN CABLE TRAYS)	VERTICAL DISTANCE	HORIZONTAL DISTANCE	BARRIER REQUIRED (NOTE 3)	REMARKS
141-A	G-11	D	B ABOVE X	1'-9"	3'-6"	NO	(4). X TOTALLY ENCLOSED

CONSTRUCTION
BIDDING PURPOSES
RELEASED FOR
ENGR.
DATE

C

SOUTH CAROLINA ELECTRIC & GAS COMPANY
VIRGIL C. SUMMER NUCLEAR STATION UNIT #1
ELECTRICAL
TRAY SEPARATION ANALYSIS
FUEL HANDLING BUILDING
ABOVE 412'-0" AND 436'-0"

MADE	CHKD	DRAWING NO.	SH NO.	REV
RDB	HMS	04 4461 SS-200 941	161-1	C

SQ LOR: RWP
ENG INTERF
GILBERT ASSOCIATES, INC.
ENGINEERS AND CONSULTANTS
READING, PA.
SCALE
W.O. 044461-020
ENGINEER APPROVAL DEPT DATE
REV MADE CH SQL APP DATE REV MADE CH SQL APP DATE
C EH - 8 8/11/97 B

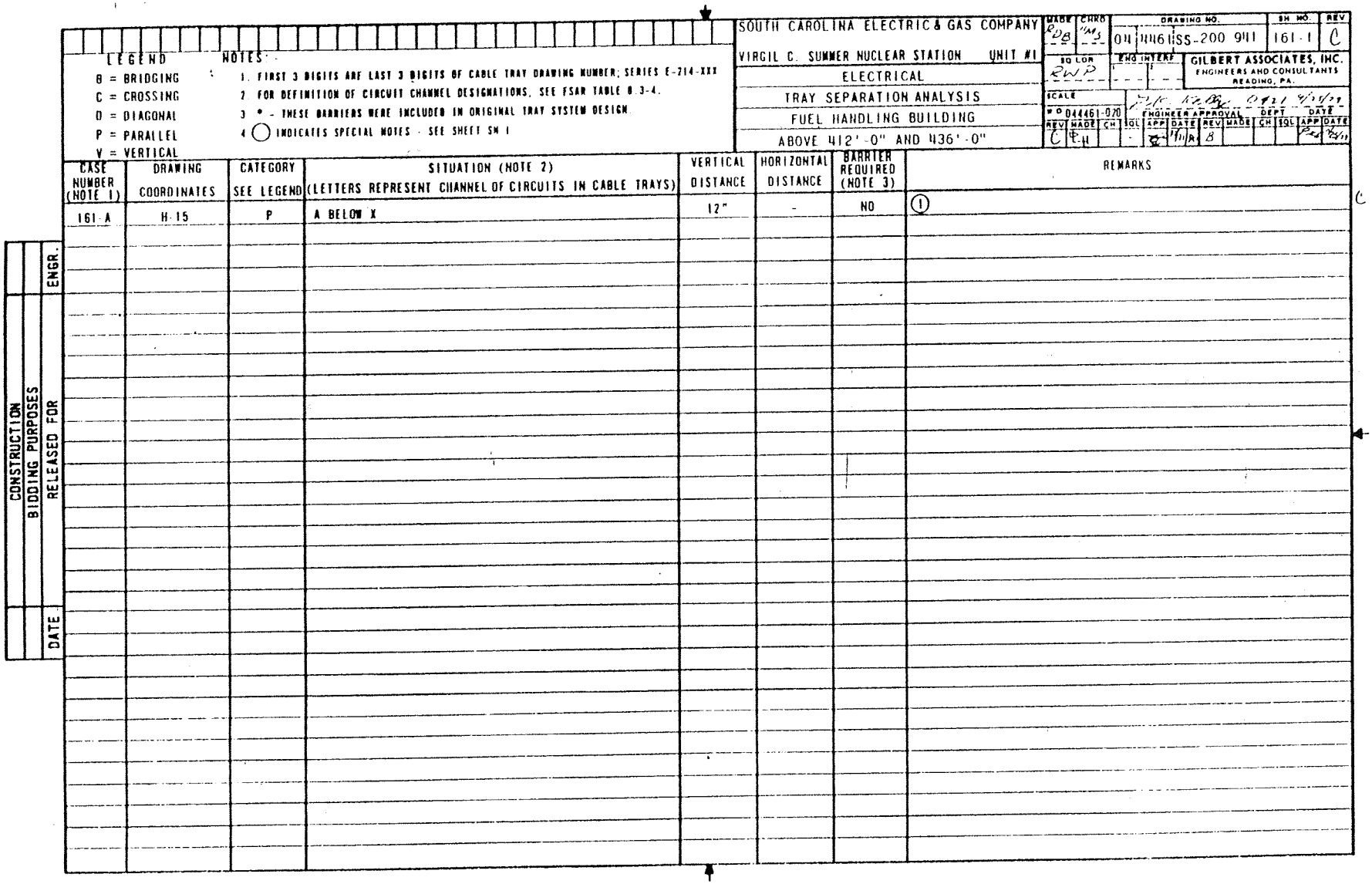

LEGEND
B = BRIDGING
C = CROSSING
D = DIAGONAL
P = PARALLEL
V = VERTICAL

NOTES:
1. FIRST 3 DIGITS ARE LAST 3 DIGITS OF CABLE TRAY DRAWING NUMBER; SERIES E-214-XXX
2. FOR DEFINITION OF CIRCUIT CHANNEL DESIGNATIONS, SEE FSAR TABLE 8.3-4.
3. * - THESE BARRIERS WERE INCLUDED IN ORIGINAL TRAY SYSTEM DESIGN.
4. ◯ INDICATES SPECIAL NOTES - SEE SHEET SH 1

CASE NUMBER (NOTE 1)	DRAWING COORDINATES	CATEGORY SEE LEGEND	SITUATION (NOTE 2) (LETTERS REPRESENT CHANNEL OF CIRCUITS IN CABLE TRAYS)	VERTICAL DISTANCE	HORIZONTAL DISTANCE	BARRIER REQUIRED (NOTE 3)	REMARKS
161-A	H-15	P	A BELOW X	12"	-	NO	1

CONSTRUCTION
BIDDING PURPOSES
RELEASED FOR
ENGR.
DATE

C

LEGEND

B = BRIDGING
C = CROSSING
D = DIAGONAL
P = PARALLEL
V = VERTICAL

NOTES:-

1. FIRST 3 DIGITS ARE LAST 3 DIGITS OF CABLE TRAY DRAWING NUMBER; SERIES E-214-XXX
2. FOR DEFINITION OF CIRCUIT CHANNEL DESIGNATIONS, SEE FSAR TABLE 8.3-4.
3. * - THESE BARRIERS WERE INCLUDED IN ORIGINAL TRAY SYSTEM DESIGN.
4. ◯ INDICATES SPECIAL NOTES - SEE SHEET SH-1

SOUTH CAROLINA ELECTRIC & GAS COMPANY
VIRGIL C. SUMMER NUCLEAR STATION UNIT #1
ELECTRICAL
TRAY SEPARATION ANALYSIS
FUEL HANDLING BUILDING
ABOVE 463'-0"

MADE RDB | CHKD HMS | DRAWING NO. 04 4461 SS-200-941 | SH. NO. 162-1 | REV C
SQ LDR RWP | ENG INTERF | GILBERT ASSOCIATES, INC. ENGINEERS AND CONSULTANTS READING, PA.
SCALE | W.O. 044461-020 | ENGINEER APPROVAL | DEPT | DATE
REV C | MADE | CH | SQL | APP | DATE | REV B | MADE | CH | SQL | APP | DATE

CASE NUMBER (NOTE 1)	DRAWING COORDINATES	CATEGORY SEE LEGEND	SITUATION (NOTE 2) (LETTERS REPRESENT CHANNEL OF CIRCUITS IN CABLE TRAYS)	VERTICAL DISTANCE	HORIZONTAL DISTANCE	BARRIER REQUIRED (NOTE 3)	REMARKS
162-A	G-15	P	B ABOVE X	8"	-	NO	5
		P	B BELOW X	12"	-	NO	1
	G-13	P	B NEXT TO X	-	12"	NO	1
		P	B BELOW X	12"	-	NO	1, 2

CONSTRUCTION
BIDDING PURPOSES
RELEASED FOR
ENGR.
DATE

SOUTH CAROLINA ELECTRIC & GAS COMPANY
VIRGIL C SUMMER NUCLEAR STATION UNIT #1
ELECTRICAL
TRAY SEPARATION ANALYSIS
SPECIAL NOTES

DRAWING NO. 01 1146 ISS-200-941 | SH. NO. SN-1 | REV B

GILBERT ASSOCIATES, INC.
ENGINEERS AND CONSULTANTS
READING, PA.

CONSTRUCTION
BIDDING PURPOSES
RELEASED FOR
ENGR.
DATE

NOTES FOR SN-1

1 FIRE WILL NOT PROPAGATE DOWN OR HORIZONTAL
2 CONTROL OR INSTRUMENT TRAY HAVE VERY LOW INTERNAL ENERGY LEVELS THEREFORE, ENERGY IS NOT AVAILABLE TO INITIATE A FIRE
3 TRAYS ARE TOTALLY ENCLOSED
4 ADEQUATE SPACIAL SEPARATIONS MAINTAINED
5 ONLY ONE CHANNEL OF CLASS 1E CIRCUITS AFFECTED THEREFORE, SYSTEM SAFETY FUNCTIONS MAINTAINED

6. This analysis concluded a barrier was not required. However, a barrier was subsequently installed in compliance with the licensing commitment to provide barriers for multiple separation violations as described in paragraph 8.3.1.4.1, Item 4.

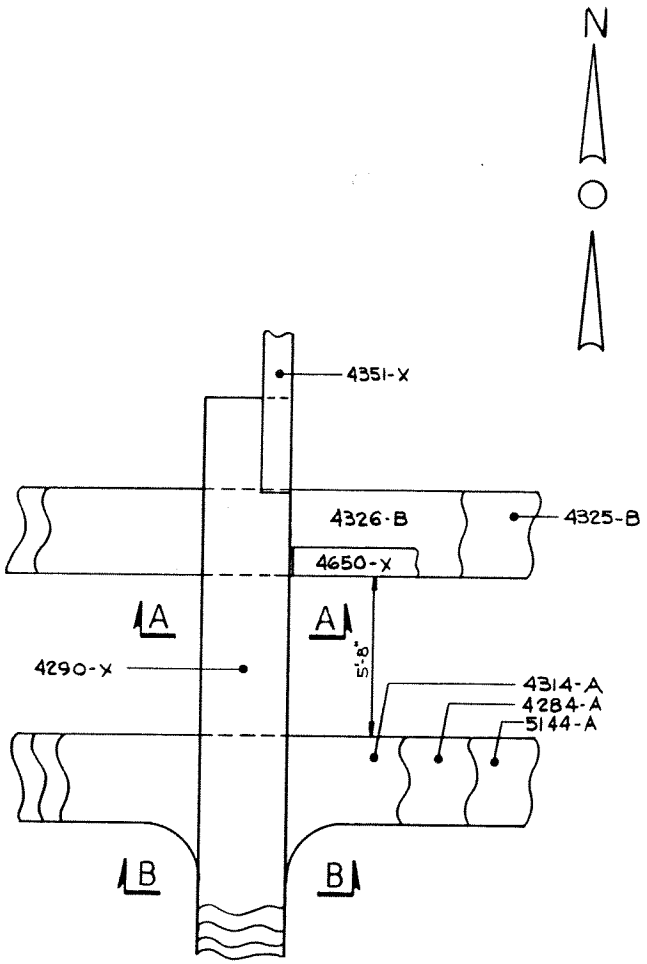

PLAN

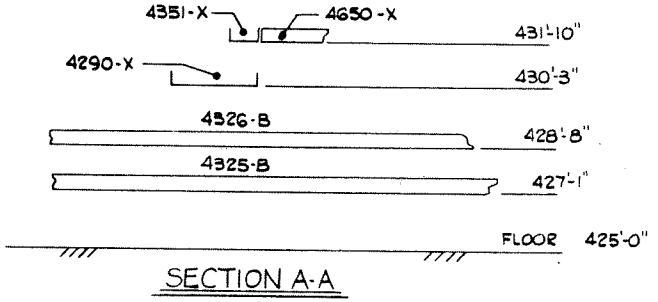

SECTION A-A

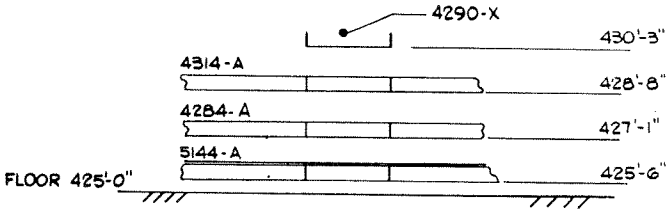

SECTION B-B

Case 041-C

Figure 8C-1

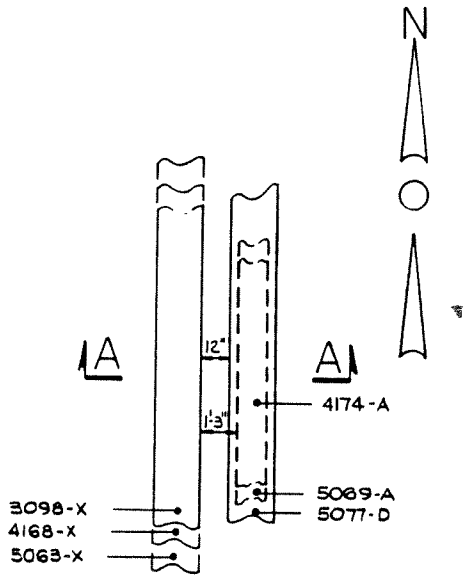

PLAN

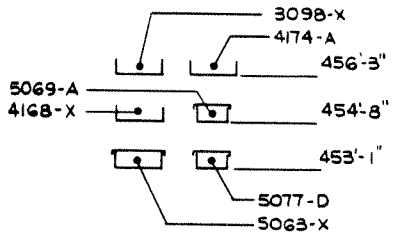

SECTION A-A

Case 102-A

Figure 8C-2

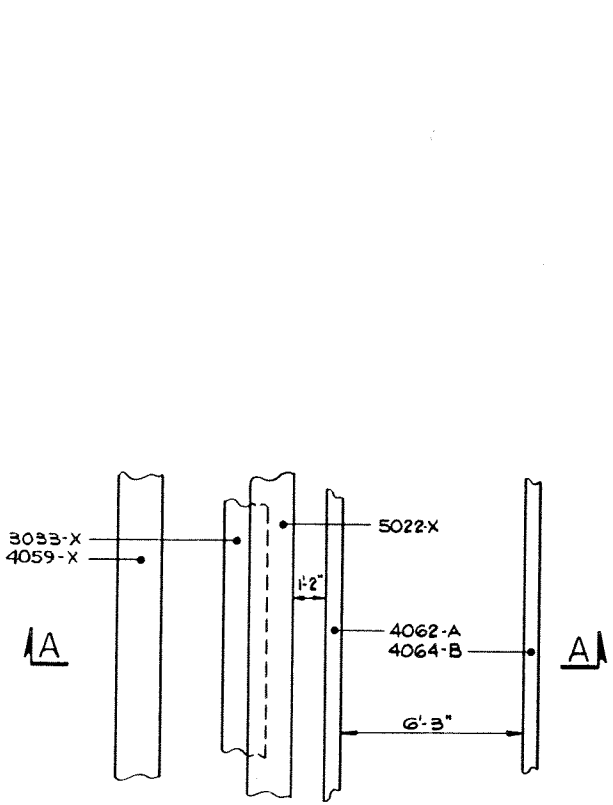

PLAN

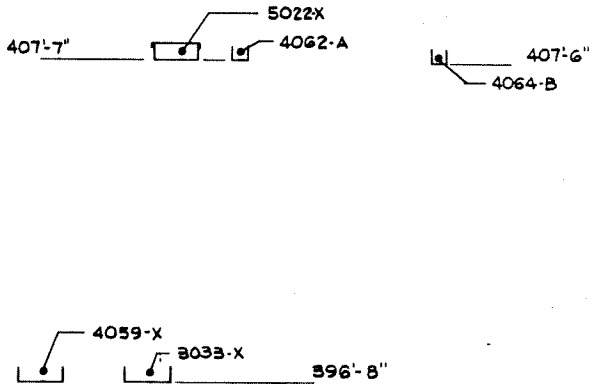

SECTION A-A

Case 073-A

Figure 8C-3

APPENDIX 8D

ANALYSIS OF THE ACCEPTABLE VOLTAGE RANGE TO BE APPLIED TO THE ESF SYSTEM

8D.1 CRITERIA

This calculation was based on two criteria:

- The voltage at each piece of safety related equipment must be within the safe operating range for that piece of equipment.

- The voltage of the offsite sources must be sufficient to operate the required loads in the event of an accident without actuating the degraded voltage relays.

NOTE 8D.2
This section is being retained for historical purposes only.

RN 99-093

8D.2 METHOD

In preparation for the development of the calculations, a "Feeder/Load Data Base" was developed and verified. This data base contains information on the characteristics of the safety related loads and their feeder circuits, including the demand load for various plant operating conditions. The characteristics for the system equipment and materials, such as transformers and cables, were taken from the "as-built" data for the specific equipment and materials.

RN 12-007

The system calculations were performed using electrical analysis software. The first calculation established a base case model of the electrical power distribution system. This model includes the existing transformer tap settings which include a 2.5% boost for the 480 volt unit substation transformers 1DA1, 1DA2, 1DB1, and 1DB2. For unit substations, 1EA1 and 1EB1 and for the emergency auxiliary and safeguards transformers, the taps are set at the nominal position. Throughout the calculation process, the transformer tap settings were reviewed to determine if revised settings could improve the overall performance of the system. (Reference Calculation DC-820-001.)

The next calculation modified the base case system model to evaluate the system under the worst case loading conditions. This condition results from the large break LOCA accident during the injection phase. The source voltage in this model was manually reduced and the system was repeatedly analyzed in an iterative process until the worst case motor terminal voltage was reduced to 90% of its rated voltage. The motors in V. C. Summer Station were specified and designed for steady state operation with a terminal voltage in the range of $\pm$ 10% of their rated voltage. The voltage at the motor control center (MCC) buses was also checked and found to exceed 420 volts.

This ensures that there is sufficient voltage for the pick-up of the MCC contactors. The resulting system model established that a voltage equal to or greater than 90.2% on 7.2 kV buses 1DA and 1DB is sufficient to ensure adequate voltage at the terminals of the safety related motors. Since the purpose of this part of the evaluation is to determine the minimum 7.2 kV bus voltage to provide adequate terminal voltage for all Class 1E loads, the number of buses connected to the offsite source and the voltage of the offsite source are not significant. The results of this model are summarized in Table 7.3.3 of Calculation DC-820-001. RN 99-087

With the minimum 7.2 kV bus voltage established, the next effort determined the minimum setpoint for the degraded voltage relays. Since these relays have a tolerance on both their calibration and operation, a detailed evaluation of the total tolerance band was performed. This determined a total tolerance band of $\pm$ 0.328%. Since the relay must operate before the 7.2 kV buses reach the minimum acceptable voltage, the setpoint value must exceed the minimum value by an amount at least equal to the tolerance. To provide both a margin and consistency with the previous settings, the setpoint was established at 91.34% of rated voltage. (Reference Calculation DC-820-001.)

Based on the degraded voltage relay setting, the tolerance on the relay calibration and operation, and the response of the SCE&G transmission system to a trip of the V. C. Summer Nuclear Station, the next part of the effort determined the minimum acceptable offsite source voltages during normal plant operation.

Studies of the transmission system under extreme loading and system configuration conditions have determined that 230 kV system voltage will dip to 95.5% of the pre-trip voltage in the event of a unit trip. After less than 3 seconds, the system voltage will recover to 97.1% of the pre-trip voltage. Similarly, the 115kV system voltage will dip to 95.6% of the pre-trip voltage in the event of a unit trip and will recover in less than 3 seconds to 97.3% of the pre-trip voltage. RN 06-042

Electrical analysis software was used to model the effects of motor starting conditions due to an accident loading sequence on the 230 kV and 115 kV offsite sources. Based on the tolerance band of the relays and the motor inrush conditions, the 7.2 kV bus voltage must be at least 93.9% of rated voltage prior to motor starting to avoid relay actuation (including a 1% margin which was determined to be unnecessary subsequent to the completion of the calculation). The minimum pre-accident voltage is also dependent on the number of plant buses connected to each offsite source. In a further evaluation, the capabilities of the various combinations of safeguard transformers and the voltage regulating transformer were determined and combined with the worst case voltage dip resulting from a unit trip. The results of these evaluations are summarized in Table 8.2-2. (Reference Calculation DC-820-001.) RN 12-007

The final part of the analysis determined the maximum allowable offsite system voltages. Additional system models were developed with electrical analysis software for plant operation in modes 5 or 6, cold shutdown or refueling. One model evaluated the system using the emergency auxiliary transformer, XTF-31, as the source and the second model used the safeguard transformers, XTF-4 and 5, as the source. The loading consisted of the minimum set of equipment that would be expected to be operational during plant shutdown and only one of the two trains of ESF equipment was supplied from each offsite source. The models were repeatedly analyzed with increased source voltages until the worst case motor terminal voltage reach 110% of motor rated voltage. The results of these models are summarized in Table 8D-2, and the maximum voltage limits are included in Table 8.2-2.

RN 12-007

8D.3 CONCLUSION

As described above, the 7.2 kV bus voltage must be at least 90.2% of rated voltage to ensure the voltage at motor terminals exceeds the rated minimum motor voltage for steady state operation. This voltage is also sufficient to ensure MCC contactor pick-up. (Reference Calculation DC-876-007.)

The setpoint for the degraded voltage relays must be at least 90.528% of rated voltage to ensure that the relays actuate when the 7.2 kV bus voltage reaches the minimum defined above. The actual relay setpoint is 91.34% of rated voltage.

The offsite system voltages must exceed the minimum values listed in Table 8.2-2 (Reference Calculation DC-820-001) in order to ensure that the degraded voltage relays will reset after the first loading step and will not (inadvertently) drop-out on subsequent steps in the event of an accident. These minimum voltages are dependent on the number of buses connected to each offsite source, the arrangement of transformers, and on whether the voltage regulator is in service.

RN 99-093

The voltage of the offsite sources must not exceed 104.2% of rated in order to avoid excessive voltage on motor terminals. The 115 kV line voltage can be higher than this if the voltage regulator is in service.

No improvement in overall system performance can be obtained with alternative transformer tap settings.

TABLE 8D-2

CALCULATED MOTOR VOLTAGES FOR MAXIMUM OFFSITE VOLTAGE

Two (2) cases, BLLXTF45 (115 kV source) and BLLXTF31 (230 kV source), were created to determine the maximum offsite system voltage allowable without producing excessive voltages at the motor terminals. Since "A" train was chosen as the worst case bus (heaviest load), "B" train was chosen as the bus to study under light load conditions (Mode 6). The criterion for evaluating worst case conditions was a running motor reaching 110% of rated terminal voltage (NEMA standard maximum).

The source used for the evaluation of the 230 kV system was an emergency auxiliary transformer, XTF-31. The source used for the evaluation of the 115 kV system was 2 ESF transformers, XTF-4 and 5, in parallel.

The offsite voltage was decreased by small increments of voltage from 1.0 per unit until the worst case motor was found.

			MAXIMUM OFFSITE VOLTAGE	
DAPPER BUS #	OPERATING "B" TRAIN MOTORS	MAXIMUM ALLOWABLE VOLTAGE	115kV SOURCE CASE BLLXTF45 120 kV (1.042 pu)	230 kV SOURCE CASE BLLXTF31 240 kV (1.042 pu)
55	XPP1B	7590	7477	7476
72	XPP39B	7590	7472	7471
502	XHX1B	506	506 *	506 *
504	XPP31B	506	504	504
509	MFN97B	506	501	501
601	XPP48B	506	497	497
602	XFN23B	506	495	495
604	XPP32B	506	496	496
5004	ALOP2	506	497	497
5007	XFN36B	506	496	496
5504	XFN46B	506	496	496
5507	XFN133	506	498	498
5509	XFN32B	506	497	497
6002	XPP4B	506	498	498
6003	XPP141B	506	498	498
6004	XFN45B	506	497	497
6006	XPN48	506	497	497
6007	XFN45A	506	497	497
7006	XFN80B	506	494	494
9003	XFN38B	506	498	498
9005	XFN39B	506	499	499
9013	XFN83B	506	498	498

* Worst Case Motor

APPENDIX 8E

ANALYSIS OF THE VOLTAGE DROPS ON THE ESF SYSTEM WHEN STARTING A 6900 OR 460 VOLT MOTOR WITH THE DIESEL GENERATOR AS THE SOURCE

8E.1 CRITERIA

The criteria was to determine (1) the voltage at the terminals of the largest safety related 6900 and 460 volt motors when they are started and (2) the voltage at the other Safety Related buses during the same period. The power source was considered to be the diesel generator with the safety injection signal loads operating on the buses.

8E.2 BACKGROUND

The 6900 volt charging/safety injection (CH/SI) pump motors and the 460 volt service water booster pump (SWBP) motors are the largest safety related motors for their respected voltages. Therefore, their characteristics were used in the calculations.

Electrical analysis software was used to simulate the restart of the largest motors and to determine the effect on system voltages. The diesel generator can be modeled as "an infinite source" with zero impedance when modeling the system under steady state conditions since the generator voltage regulator will hold the terminal voltage to within ± 1/2% of the setting. However, for transient conditions, the diesel generator model needs to include an internal impedance since the voltage regulator can not respond immediately to changes in loading. The source impedance for the transient model was based on the short circuit impedance of the generator as described below in section 8E.3. To obtain the internal source voltage, the source voltage of the model was manually adjusted to produce a machine terminal voltage of 0.945 per unit (under steady state conditions) with the generator load equal to the maximum system load, minus the load of the motor to be restarted. A terminal voltage of 0.945 per unit was used because the lower administrative limit for setting the voltage regulator is 95% and the regulator has a tolerance of ± 1/2%. To find the voltage levels during the initial inrush for motor starting, the source voltage was held constant and the starting load of the motor was added to the system. The system voltages were then calculated. RN 12-007 RN 98-061

As described in Section 8D.2, the safety injection signal load is the largest load to be applied to the ESF system buses at any one time. Thus, this load was used as the running load on the buses.

8E.3 METHOD

An analytical software model (from calculation DC-836-008, case DSTEP8S) of the diesel generator steady state full load condition was used as a base case for developing the large motor restart model (Reference calculation DC-8360-012). This DSTEP8S case model determines the voltage at the "A" train buses when the Safety Injection loads are operating and when the Diesel Generator is supplying the load. RN 12-007 RN 98-042

To evaluate the restart of large motors on the diesel generator, the steady state analytical software model was modified to incorporate a source impedance and to create two new cases. The first analytical software model, case DS825R, simulates the restart of the 6900 Volt Charging/SI pump (XPP43, 900 HP) and the second, case DS8101R, simulates the restart of the 480 volt service water booster pump (XPP45, 350 HP). RN 12-007 00-01

The source impedance was taken as equal to the short circuit impedance of the generator. This short circuit impedance was based on the generator test data which includes the following information: RN 98-061

Generator rating:	5845 KVA
Generator X/R ratio:	16
Short circuit reactance:	0.13 per unit

The steady state analytical software model was copied and modified by adding the source impedance and turning pumps XPP43A and XPP45A off-line in order to simulate the pumps tripping. The source voltage for the model was manually adjusted until the generator terminal voltage was equal to 0.945 per unit. This is the lowest value allowed by the combination of the regulator setting limit of 95% and the ± 1/2% tolerance of the regulator. The resulting source voltage was then held constant and the starting load for each of the two motors was added into each of the two respective models. The following are the load values used: RN 12-007

MODEL BUS	TAG	KW	KVAR
25	XPP43A	485	2992
101	XPP45A	231	1074

RN 12-007

The resulting bus voltage from the two new model cases DS825R and DS8101R were then evaluated to determine the following: RN 12-007 00-01

a. Acceptance of the motor starting voltage by comparing the model case voltage with the motor's minimum required starting voltage. RN 12-007

b. Verification that the motor control center (MCC) contactors do not drop out during large motor restart.

The 6900 volt safety related motors were designed to start at 70% of rated voltage and, therefore, have a minimum starting voltage of 4830 volts. The 460 volt safety related motors were designed to start at 80% of rated voltage and, therefore, have a minimum starting voltage of 368 volts.

The contactors in the SQUARE D motor control centers have a dropout of 65% of nominal voltage. A value of 5% was added to account for voltage drop within the control circuit. Since the 480/120 Volt power transformers are wound to produce 120 volts on the secondary when fully loaded, a value of 70% of 480 volts (336V) on the MCC busses was used in the evaluation.

8E.4 CONCLUSION

Considering the diesel generator as the power source, the calculated voltage at the terminals of the 6900 volt CH/SI pump motor and 460 volt SWBP motor is above the minimum design starting voltage as mentioned in Section 8.3.1.1.4.2 and listed below: 00-01

		VOLTAGE			RN 01-113 12-007
MODEL BUS	TAG	MIN START	CALCULATED	MARGIN	
25	XPP43A	4830	6323	31%	
101	XPP45A	368	415	13%	

Since other safety related motors are smaller than the CH/SI pump motor and the SWBP motor for their respective voltage levels, the motor terminal voltage during the starting of all safety related motors will be above the design starting voltage for these motors.

The following table lists the voltages at each MCC bus for each of the two restart conditions. The table shows that all voltages are substantially above the 336 volt criteria and, therefore, verifies that the energized contactors will not drop out during large motor restart.

MODEL BUS	TAG	START XPP43A	START XPP45A	RN 12-007 RN 01-113
1000	XMC1DA1X-P	410	431	
1500	XMC1DA2X-S	409	430	
2000	XMC1DA2Y-P	408	429	
2500	XMC1DA2Y-S	409	430	
3000	XMC1DA2Z	407	428	
4000	XMC1EA1X	418	438	
8000	XMC1EC1X*	418	438	

* Loads on this MCC are not energized. Therefore, the voltages are the same as for bus 4000.

Tables 8E-1 and 2 list the calculated voltages of the ESF system buses and the motor terminals.

TABLE 8E-1

CALCULATED VOLTAGE LEVEL OF ESF SYSTEM BUSES AND MOTOR TERMINALS WITH A DIESEL GENERATOR AS A SOURCE AND STARTING THE 6900 VOLT CHARGING/SAFETY INJECTION PUMP MOTOR

Condition:

Initial voltage:	6804 (94.5% of 7200 volts at diesel generator terminals prior to starting motor)
Initial Load:	3505 KW
Power Source:	Diesel Generator
Motor:	Charging/Safety Injection Pump Mtr. (6900 Volt)

Resulting Voltages:

ESF System Points	Voltages	Percent of Nominal Bus Voltage
Diesel Generator	6339	88.04
7200 Volt Bus 1DA	6328	87.88
6900 Volt CH/SI Pump	6323	91.63 of motor nominal rating
480 Volt Bus 1DA1	418	87.08
480 Volt Bus 1DA2	410	85.41
480 Volt MCC 1DA2Z	407	84.79
7200 Volt Bus 1EA	6322	87.8
480 Volt MCC 1EA1X	418	87.08

TABLE 8E-2

CALCULATED VOLTAGE LEVEL OF ESF SYSTEM BUSES AND MOTOR TERMINALS WITH A DIESEL GENERATOR AS A SOURCE AND STARTING THE 460 VOLT SERVICE WATER BOOSTER PUMP MOTOR

Condition:

Initial voltage:	6804 (94.5% of 7200 volts at diesel generator terminals prior to starting motor)
Initial Load:	4087 kW
Power Source:	Diesel Generator
Motor:	Service Water Booster Pump Motor (460 Volt)

Resulting Voltages:

ESF System Points	Voltages	Percent of Nominal Bus Voltage
Diesel Generator	6627	92.04
7200 Volt Bus 1DA	6618	91.92
460 Volt SWBP Pump	415	90.21 of motor nominal rating
480 Volt Bus 1DA1	423	88.12
480 Volt Bus 1DA2	431	89.79
480 Volt MCC 1DA2Z	428	89.16
7200 Volt Bus 1EA	6612	91.83
480 Volt MCC 1EA1X	438	91.25

RN 01-113

APPENDIX 8F

STARTING SEQUENCE OF ESF EQUIPMENT FOLLOWING AN ACCIDENT COINCIDENT WITH A DEGRADED VOLTAGE CONDITION

8F.1 INTRODUCTION

The following study identifies the timed sequence of starting the ESF system equipment for an accident coincident with degraded voltage on the offsite power system. The accidents considered are (1) Loss of Coolant Accident (LOCA) and (2) Main Steam Line Break (MSLB). The study compares the equipment starting times during accident conditions, with a degraded voltage to the starting times assumed in the accident analyses with total loss of voltage. See Tables 8F-1 and 2.

8F.2 DISCUSSION

During these two accident scenarios, the diesel generator will start when safety injection is initiated at time zero. A maximum of 10 seconds is then required for the generator to reach the speed and voltage necessary to connect to the ESF buses.

The degraded voltage relays are set to actuate at 91.34% of nominal voltage. If the voltage drops below 80% of nominal, the undervoltage relays will actuate. A time delay of 3 seconds is provided before the degraded voltage relays signal a start to the diesel to allow for voltage dips caused by a large motor starting. However, it should be noted that for these accidents the diesel was started at time zero by safety injection; therefore the signal to start the diesel generated by the degraded voltage relay is duplicative. If the degraded voltage condition persists for 4 more seconds (now a total of 7 seconds), the 7.2 kV ESF buses are cleared. An additional time delay of 3 seconds is then provided to allow residual motor voltage to decay.

8F.3 CONCLUSION

Under the accidents discussed here, a maximum of 10 seconds is required before the diesel generator can be connected to the ESF buses. However, if there is no accident and a degraded voltage condition exists, a maximum of 13 seconds would be required before the diesel is connected.

TABLE 8F-1

DEGRADED GRID VOLTAGE COINCIDENT WITH LOCA

TIME (SECONDS)	DESCRIPTION OF EVENT	
0	Degraded voltage condition on 7.2 kV ESF Buses Loss of Coolant Accident (SI Signal - Start Diesel Generator signal).	
3	Degraded voltage detection signal.	
7	Clear 7.2 kV ESF bus (Trip incoming and feeder breakers).	
10	Close Diesel Generator breaker. Start load block #1 (Start SI/Charging Pump, Start opening valves).	
12 Note 1	SI/Charging Pump at full speed (~2 sec starting time).	98-01
15	Start RHR Pump.	
19 Note 1	RHR Pump at full speed (~4 sec starting time).	98-01
20	Start SW Pump. Start Chilled Water Pump.	00-01
24.5 Note 2	SW Pump at full speed (~4.5 sec starting time).	98-01
25	Start Component Cooling Pump.	
	Component Cooling Pump at full speed (~4 sec starting time).	
27 Note 1	Safety Injection related valves at their final position (27 sec. includes EDG start time, valve stroke time, and signal processing time).	00-01
30	Start Emergency Feedwater Pump.	
35	Start Reactor Building Cooling Units. Start Fuel Handling Building Exhaust Fan.	

TABLE 8F-1 (Continued)

DEGRADED GRID VOLTAGE COINCIDENT WITH LOCA

TIME (SECONDS)	DESCRIPTION OF EVENT	
40	Start SW Booster Pump.	
42	Emergency Feedwater Pump at Full Speed. (~12 sec starting time).	
43 Note 4	Reactor Building Cooling Units at full speed and air flow has reached operating values (8 sec delay from time of starting the fans to the time of having reached operating values of air flow per FSAR, Section 6.2.2.2.2.2).	98-01
45	Start HVAC Chiller. SW Booster Pump at full speed (5 sec starting time per FSAR, Section 6.2.2.2.2.2).	

NOTES:

1.) See FSAR Table 15.4-1. 98-01

2.) Critical case is the requirement to provide cooling water to the Diesel Generator within 1 minute from the time of starting.

3.) See FSAR, Section 15.4.2.2.2.1. 98-01

4.) See FSAR, Section 6.2.1.3.4.3.

TABLE 8F-2

DEGRADED GRID VOLTAGE COINCIDENT WITH MSLB

TIME (SECONDS)	DESCRIPTION OF EVENT	
0	Degraded voltage condition on 7.2 kV ESF Bus on Main Steam Line Break Accident (SI Signal - Start Diesel Generator signal).	
3	Degraded voltage detection signal.	
7	Clear 7.2 kV ESF bus (Trip incoming and feeder breakers).	
10	Close Diesel Generator breaker. Start load block #1 (Start SI/Charging Pump, Start opening valves).	
12 Note 1	SI/Charging Pump at full speed (~2 sec starting time).	98-01
15	Start RHR Pump.	
19 Note 1	RHR Pump at full speed (~4 sec starting time).	98-01
20	Start SW Pump. Start Chilled Water Pump.	00-01
24.5 Note 2	SW Pump at full speed (~4.5 sec starting time).	98-01
25	Start Component Cooling Pump.	
27 Note 1	Safety Injection related valves at their final position (27 sec. includes EDG start time, valve stroke time, and signal processing time).	00-01
29	Component Cooling Pump at full speed (~4 sec starting time).	
30	Start Emergency Feedwater Pump.	
35	Start Reactor Building Cooling Units. Start Fuel Handling Building Exhaust Fan.	

TABLE 8F-2 (Continued)

DEGRADED GRID VOLTAGE COINCIDENT WITH MSLB 00-01

TIME (SECONDS)	DESCRIPTION OF EVENT	
40	Start SW Booster Pump.	
42 (60) Note 3	Emergency Feedwater Pump at Full Speed. (~12 sec starting time).	00-01
43 Note 4	Reactor Building Cooling Units at full speed and air flow has reached operating values (8 sec delay from time of starting the fans to the time of having reached operating values of air flow per FSAR, Section 6.2.2.2.2.2).	98-01
45	Start HVAC Chiller. SW Booster Pump at full speed (5 sec starting time per FSAR, Section 6.2.2.2.2.2).	

NOTES:

1.) See FSAR Section 15.4.2.1.2.1. 98-01

2.) Critical case is the requirement to provide cooling water to the Diesel Generator within 1 minute from the time of starting.

3.) See FSAR, Section 15.4.2.2.2.1. 98-01

4.) See FSAR, Section 6.2.1.3.4.3.

APPENDIX 8G

ELECTRICAL CONTAINMENT PENETRATION CONDUCTOR OVERCURRENT PROTECTION DEVICES

The following drawings identify overcurrent protection devices required to protect containment penetration assembly conductors in accordance with the requirements of Regulatory Guide 1.63. Regulatory Guide 1.63 is discussed in further detail in Appendix 3A.

17 | 16 | 15 | 14 | 13 | 12 | 11 | 10 | 9 | 8 | 7 | 6 | 5 | 4 | 3 | 2 | 1

TYPICAL PROCESS USED TO SIZE A PENETRATION PROTECTION DEVICE

A COMPARISON OF THE TIME VERSUS CURRENT WITHSTANDABILITY (I^2t) OF THE PENETRATION ASSEMBLY CONDUCTORS AND THE ASSOCIATED PROTECTIVE DEVICES SHALL BE PERFORMED TO ENSURE THAT BOTH PRIMARY AND BACKUP OVERCURRENT PROTECTIVE DEVICES ARE DESIGNED TO CLEAR A FAULT CONDITION PRIOR TO REACHING THE (I^2t) CAPABILITY OF THE ASSOCIATED PENETRATION ASSEMBLY CONDUCTORS.

STEP 1. PLOT THE (I^2t) WITHSTANDABILITY OF THE PENETRATION ASSEMBLY CONDUCTOR ON A LOG-LOG TIME-CURRENT CURVE USING INFORMATION OBTAINED FROM TABLE 1.

STEP 2. CALCULATE THE MAXIMUM AVAILABLE SHORT CIRCUIT CURRENT THAT COULD BE EXPERIENCED IF A BOLTED FAULT WERE TO OCCUR BETWEEN CONDUCTORS AT THE INBOARD END OF THE PENETRATION ASSEMBLY. NOTE THAT THIS STEP NEED NOT BE PERFORMED IF THE OVERCURRENT PROTECTIVE DEVICE TIME-CURRENT CHARACTERISTICS INDICATE A CLEARING TIME WHICH IS LESS THAN THE TIME REQUIRED TO REACH THE (I^2t) CURVE PLOTTED IN STEP 1 REGARDLESS OF THE SHORT CIRCUIT CURRENT VALUE (SEE NOTE 4).

STEP 3. PLOT A VERTICAL LINE TO DISPLAY THE MAXIMUM AVAILABLE SHORT CIRCUIT CURRENT CALCULATED IN STEP 2, IF APPLICABLE.

STEP 4. CHOOSE AN OVERCURRENT PROTECTIVE DEVICE WHOSE MANUFACTURER'S TIME-CURRENT CHARACTERISTICS COORDINATE WITH THE (I^2t) CURVE OF THE PENETRATION ASSEMBLY CONDUCTOR AS ESTABLISHED IN STEP 1 AND THE AVAILABLE SHORT CIRCUIT CALCULATION PERFORMED IN STEP 2, IF APPLICABLE.

STEP 5. PLOT THE TIME-CURRENT CHARACTERISTICS OF THE PRIMARY AND BACKUP OVERCURRENT PROTECTIVE DEVICES AS SPECIFIED BY THE RESPECTIVE DEVICE MANUFACTURER. THE MAXIMUM BAND VALUES DISPLAYED BY THE MANUFACTURER'S OVERCURRENT PROTECTIVE DEVICE TIME-CURRENT CHARACTERISTIC CURVE SHOULD BE USED FOR CONSERVATISM.

NOTES:-

1. THIS PROCESS IS NOT THE ONLY METHOD USED TO SIZE OVERCURRENT PROTECTIVE DEVICES.
2. THIS PROCESS DOES NOT ADDRESS OVERCURRENT PROTECTION OF LOAD EQUIPMENT OR ASSOCIATED FIELD CABLING. IN MOST CASES THE ABOVE PROCEDURE IS USED TO DETERMINE WHETHER THE G/C PROTECTIVE DEVICES DESIGNED FOR LOAD EQUIPMENT AND FIELD CABLING PROTECTION PROVIDE ADEQUATE PROTECTION FOR ASSOCIATED PENETRATION CONDUCTORS.
3. PRIMARY AND BACKUP OVERCURRENT DEVICES USED FOR PENETRATION PROTECTION MAY OR MAY NOT BE COORDINATED WITH EACH OTHER OR UPSTREAM SYSTEM PROTECTION.
4. ALTHOUGH NOT A REQUIREMENT OF NRC REGULATORY GUIDE 1.63, WHICH ADDRESSES ONLY PENETRATION PROTECTION, THE PROTECTIVE DEVICE SHALL HAVE AN INTERRUPTING RATING SUFFICIENT FOR THE SYSTEM VOLTAGE AND THE MAXIMUM SHORT CIRCUIT CURRENT WHICH IS AVAILABLE AT THE LINE TERMINALS OF THE PROTECTIVE DEVICE.

TABLE 1

THE FOLLOWING AMPERE VALUES WERE OBTAINED BY CALCULATION USING ICEA P-32-382 FORMULA AND D.G.O'BRIEN'S TEST REPORT NO. ER-262.
INFORMATION: ACTUAL CALCULATIONS ARE DOCUMENTED IN G/C CALCULATION NO. DC-350001/56, WHICH HAS BEEN REPLACED BY CALCULATION NOS. DC08470-006 AND DC08470-013.

ITEM	CONDUCTOR SIZE	I^2t	IF t=0.1 SECONDS, I=	IF t=75 SECONDS, I=	IF t=100 SECONDS, I=	IF t=200 SECONDS, I=	IF t=300 SECONDS, I=
1	*16 AWG	50,583.98	711.22	25.97	22.49	15.90	12.99
2	*12 AWG	324,840.99	1,800.11	65.73	56.92	40.25	32.87
3	*4 AWG	13,239,718	11,506.39	420.15	363.86	257.29	210.08
4	*1/0 AWG	84,742,530	29,110.57	1,062.97	920.56	650.93	531.48
5	250 MCM	474,956,250	68,917.87	2,516.50	2,179.35	1,541.03	1,258.25

THE FOLLOWING AMPERE VALUES WERE OBTAINED FROM D.G. O'BRIEN REPORT NO. ER-262:

ITEM	CONTINUOUS CURRENT	1000 SECOND CURRENT	60 SECOND SHORT TIME OVERLOAD
1	5 AMPS		
2	20 AMPS*	21	85 AMPS*
3	70 AMPS*	120	490 AMPS*
4	125 AMPS*	221	903 AMPS*
5	275 AMPS*	471	1925 AMPS*

* CONFIRMED BY D.G. O'BRIEN TESTS

NOTES:

1. THE 60 SECOND VALUE FOR *12 AWG CONDUCTORS IS LESS THAN 7X CONTINUOUS CURRENT RATING (FAILURES EXPERIENCED AT 140 AMPS).
2. 1000 MCM PENETRATION ASSEMBLY CONDUCTORS ARE USED SOLELY FOR 7.2 KV REACTOR COOLANT PUMPS, XPP-30A, B, AND C. THE (I^2t) WITHSTANDABILITY OF 1000 MCM PENETRATION ASSEMBLY CONDUCTORS WAS PLOTTED ON A LOG-LOG TIME CURRENT CURVE USING INFORMATION SPECIFIED BY D.G. O'BRIEN. SINCE ALL EXISTING 1000 MCM PENETRATION ASSEMBLY CONDUCTORS ARE USED (i.e., NO SPARES) AND SINCE FUTURE REQUIREMENTS FOR 1000 MCM PENETRATION ASSEMBLY CONDUCTORS ARE NOT ANTICIPATED, TIME-CURRENT VALUES ESTABLISHING (I^2t) WITHSTANDABILITY OF THE 1000 MCM CONDUCTORS WILL NOT BE IDENTIFIED.
3. CALCULATED CURRENT VALUES FOR TIMES OVER TEN (10) SECONDS ARE CONSERVATIVE SINCE THE ICEA STANDARD P-32-382 FORMULA DOES NOT COMPENSATE FOR HEAT DISPERSION TO THE ENVIRONMENT.

TYPICAL METHODOLOGY USED TO ESTABLISH TEST SETPOINTS AND RESPONSE TIMES OF PENETRATION PROTECTION DEVICES

TEST SETPOINT AND ASSOCIATED RESPONSE TIME VALUES ARE ESTABLISHED TO ENSURE THAT THE PROTECTION DEVICES WILL OPERATE IN ACCORDANCE WITH MANUFACTURER'S DESIGN CHARACTERISTICS AND THAT THE OPERATION WILL OCCUR PRIOR TO REACHING THE (I^2t) CAPABILITY OF THEIR ASSOCIATED PENETRATION ASSEMBLY CONDUCTORS, WITH ADEQUATE MARGIN (i.e., THE POINT ESTABLISHED BY THE TEST SETPOINT/RESPONSE TIME VALUE SHOULD AS A MINIMUM BE EQUAL TO THAT ESTABLISHED BY THE MAXIMUM BAND OF THE PROTECTIVE DEVICE, AND SHOULD AS A MAXIMUM BE LESS THAN THE VALUE OF PENETRATION ASSEMBLY CONDUCTOR (I^2t) CAPABILITY ESTABLISHED BY CALCULATION AS PLOTTED ON A TIME VERSUS CURRENT CURVE).

480V SWITCHGEAR POWER CIRCUIT BREAKERS

THE METHOD USED TO ESTABLISH TEST SETPOINTS AND RESPONSE TIMES ASSOCIATED WITH 480V SWITCHGEAR POWER CIRCUIT BREAKERS IS AS FOLLOWS:

ESTABLISH TEST SETPOINTS AND ASSOCIATED RESPONSE TIMES IN ACCORDANCE WITH GOULD/ITE SWITCHGEAR INSTRUCTION MANUAL BULLETIN IB-5.1.1-22 TABLE 4, PAGE 9 AND THE APPROPRIATE SHEETS OF G/C, INC RELAY AND BREAKER SETTING DWG. SS-200-327.

EXAMPLE:

TEST SET POINT

LONG-TIME DELAY = 3 X LONG-TIME P.U. AMP SETTING
SHORT-TIME DELAY = 1.5 X SHORT-TIME P.U. AMP SETTING
INSTANTANEOUS DELAY = 1.5 X INSTANTANEOUS P.U. AMP SETTING

RESPONSE TIME

LONG-TIME DELAY ≤ 2 X HIGH RANGE OF DEVICE BAND SETTING
SHORT-TIME DELAY ≤ 2 X HIGH RANGE OF DEVICE BAND SETTING
INSTANTANEOUS ≤ 4 X 0.05 SECONDS (0.20 SECONDS)

NOTE:
SOLID STATE TRIP DEVICE TYPE/BAND SELECTION, AND RELAY SETTING INFORMATION SHOULD BE OBTAINED FROM G/C, INC DRAWING SS-200-327.

480V AC, 120V AC, AND 125V DC MOLDED CASE CIRCUIT BREAKERS

THE METHOD USED TO ESTABLISH TEST SETPOINTS AND RESPONCE TIMES OF MOLDED CASE CIRCUIT BREAKERS LOCATED IN MOTOR CONTROL CENTERS AND POWER DISTRIBUTION PANELS IS AS FOLLOWS:

ESTABLISH TEST SETPOINTS AND ASSOCIATED RESPONSE TIMES FOR THERMAL-MAGNETIC CIRCUIT BREAKERS IN ACCORDANCE WITH NEMA STANDARD AB-2.

EXAMPLE:
TEST SET POINT=3 X BREAKER AMPERE RATING
RESPONSE TIME= MAXIMUM TRIPPING TIME (SECONDS) AS IDENTIFIED IN NEMA STANDARD AB-2 1980, PART 2, TABLE 2-1.

ESTABLISH TEST SETPOINTS AND ASSOCIATED RESPONSE TIMES FOR MAGNETIC CIRCUIT BREAKERS IN ACCORDANCE WITH MANUFACTURER'S RECOMMENDATIONS.

EXAMPLE:
TEST SET POINT= 15 X BREAKER AMPERE RATING
RESPONSE TIME= INSTANTANEOUS TRIPPING IN THE REGION OF ½ CYCLE (0.0083 SECONDS) IS REPRESENTED BY (N/A) ON THE FUSE CHART. RESPONSE TIME MEASUREMENT IS NOT REQUIRED SINCE FAILURE OF THE BREAKER TO TRIP INSTANTANEOUSLY WOULD CAUSE DAMAGE TO THE UNIT AND CONSEQUENT REPLACEMENT.

FUSES

THE METHOD USED TO ESTABLISH TEST SETPOINTS AND RESPONSE TIMES OF FUSES IS AS FOLLOWS:

ESTABLISH TEST SETPOINTS OF FUSES IN ACCORDANCE WITH VENDOR SUPPLIED RESISTANCE VALUES WHICH HAVE BEEN OBTAINED FOR EACH SPECIFIC TYPE AND SIZE OF FUSE USED. RESISTANCE VALUES AT 40°C WERE DERIVED BY CALCULATION USING 25°C VALUES PROVIDED BY THE FUSE MANUFACTURER.

TEST SET POINT RESISTANCE VALUES ARE AS FOLLOWS:

MANUFACTURER	TYPE AND SIZE	MATERIAL FUSE LINK	RESISTANCE IN MILLIOHMS (MINIMUM) AT 25°C (77°F)	(MINIMUM) (AT 40°C (104°F))	(MAXIMUM) (AT 25°C (77°F))	(MAXIMUM) (AT 40°C (104°F))
BUSS	ABC-3	COPPER	≥ 41.0	≥ 43.30	49.0	51.84
	ABC-5	ZINC	≥ 24.0	≥ 25.49	33.0	35.85
	ABC-6	ZINC	≥ 20.5	≥ 21.73	25.0	26.55
	P/N2432859	CHILOING METAL	≥ 37.5	N/A	52.5	N/A
	NON-3	AG PLATED CU	≥ 45.0	≥ 41.7	52.0	65.72
	NON-6	ZINC	≥ 18.0	≥ 19.17	24.0	25.49
	NON-15 (CLASS H)	ZINC	≥ 6.05	≥ 6.47	8.03	8.53
	(CLASS K5)	COPPER	≥ 11.10	≥ 10.60	16.5	17.46
	FRS-1.?	CONSTANTAN	≥ 65.0	≥ 65.0	80.0	80.82
	FRN-3.2 OR FRN-R3.2	COPPER	≥ 100.0	≥ 105.0	135.0	142.8
	FRN-R6	COPPER	≥ 75.9	≥ 79.35	84.0	88.87
	FRN-R10	CONSTANTAN	≥ 30.0	≥ 30.0	38.0	38.81
	FRN-R15	65% CU, 10% NI, 25% ZN	≥ 14.0	≥ 15.07	17.0	18.24
	FRN-3	COPPER	≥ 33.0	≥ 34.91	45.0	47.61
	FRN-R80	UNKNOWN	≥ 1.0	N/A	1.3	N/A
GOULD	OT-3	UNKNOWN	≥ 86.0	N/A	120.0	N/A
	OT-6	ZINC	≥ 18.3	≥ 20.7	25.4	26.97
	OT-10	ZINC	≥ 14.0	≥ 14.97	17.4	18.48
	OT-15	COPPER	≥ 6.71	≥ 6.65	7.8	8.25
	TRS150R	COPPER	> 0.619	> 0.655	0.728	0.762
	TRS200R	COPPER	> 0.401	> 0.433	0.460	0.487
	A25X50-4	COPPER	> 1.62	> 1.71	1.97	2.06
	A2Y6-1	UNKNOWN	> 22.4	N/A	26.6	N/A
	A2Y15-1	ZINC	> 8.13	> 8.61	9.10	9.66
	A2Y20-1	SILVER	> 4.37	> 4.55	4.74	5.02
	A2Y50-1	SILVER	> 1.66	> 1.76	1.81	1.92
	A2Y60-1	SILVER	> 1.26	> 1.34	1.46	1.55
	A2K6R	UNKNOWN	> 20.6	N/A	25.9	N/A
	A2K15R	UNKNOWN	> 7.7	N/A	9.8	
	A2K20R	UNKNOWN	> 7.65	N/A	8.7	
	A2K50R	UNKNOWN	≥ 1.5	N/A	1.73	
	A2K60R	UNKNOWN	≥ 1.21	N/A	1.5	
	TR3.2R	UNKNOWN	≥ 191.0	N/A	277.0	
	TR6R	UNKNOWN	≥ 73.4	N/A	80.6	
	TR10R	UNKNOWN	≥ 21.0	N/A	31.6	
	TR15R	UNKNOWN	≥ 18.0	N/A	22.5	
	TR60R	UNKNOWN	≥ 1.1	N/A	1.34	N/A
BUSS	AGS5	ZINC	≥ 35.0	≥ 26.55	34.0	36.11
	FWX-10	CHILOING METAL	≥ 37.5	N/A	52.5	N/A
	NON 10	ZINC	≥ 11.0	≥ 11.68	18.0	19.12
	KTN R6	AG PLATED CU	≥ 24.5	≥ 25.97	30.0	31.8
	KTN-R15	AG PLATED CU	≥ 6.5	≥ 6.89	8.05	8.53
	KTN-R20	AG PLATED CU	≥ 5.7	≥ 6.04	7.1	7.53
	KTN-R50	AG PLATED CU	≥ 1.63	≥ 1.72	2.1	2.23
	KTN-R60	AG PLATED CU	≥ 1.1	≥ 1.17	1.4	1.48
	KTS R6	AG PLATED CU	≥ 31.5	≥ 33.39	37.5	39.75
	KTS-R15	AG PLATED CU	≥ 8.0	≥ 8.48	9.2	9.75
	KTS-R20	AG PLATED CU	≥ 3.75	≥ 3.98	4.5	4.77
	KTS-R50	AG PLATED CU	≥ 1.5	≥ 1.59	1.85	1.96
	KTS-R60	AG PLATED CU	≥ 1.2	≥ 1.27	1.5	1.59
	SAB-50	SILVER	≥ 2.3	≥ 2.44	2.8	2.97
	MDA-15	BRASS	≥ 5.60	≥ 5.77	7.30	7.52
LITTELFUSE	313301	UNKNOWN	≥ 319.75	≥ 334.50	431.75	452.81
	313005	UNKNOWN	≥ 20.42	≥ 21.87	28.18	29.59
	314003	UNKNOWN	≥ 31.87	N/A	48.38	N/A
	314005	UNKNOWN	≥ 24.75	N/A	35.95	N/A
	314006	UNKNOWN	≥ 21.56	N/A	27.44	N/A

RESPONSE TIMES ARE NOT APPLICABLE AND ARE REPRESENTED BY (N/A) ON THE FUSE CHART.

NOTES:

1. FUSES WHICH HAVE BEEN IN SERVICE SHALL BE ALLOWED TO COOL TO ROOM TEMPERATURE BEFORE RESISTANCE TEST MEASUREMENTS ARE MADE. FOR CONSERVATISM THE 40°C RESISTANCE VALUES ARE APPLICABLE FOR ESTABLISHING TEST SETPOINTS. (EXCEPTIONS: BUSS 2432859, FWX-10 FRN-R80; GOULD A2K6R, A2K15R, A2K20R, A2K50R, A2K60R, A2Y6-1 OT-3, TR3.2R, TR6R, TR30R, TR15R, TR60R; LITTELFUSE 314003, 314005, 314006 FUSES SHALL BE TESTED AT 25°C (77°F ±5°F).
2. THE APPROPRIATE FUSE MANUFACTURER SHALL CONFIRM THAT THE MINIMUM RESISTANCE VALUES AT 25°C AND THE FUSE LINK MATERIAL OF APPLICABLE FUSES INSTALLED COMPLIES WITH THE ABOVE INFORMATION.
3. THE 25°C RESISTANCE VALUE CAN BE SUBSTITUED FOR ITS CORRESPONDING 40°C RESISTANCE VALUE (TEST SETPOINT VALUE) AS LONG AS THE AMBIENT TEMPERATURE IS VERIFIED TO BE 25°C (77°F ± 5°F).
4. BUSS FUSE PART NO. 2432859 IS A SPECIAL FUSE RECOMMENDED BY WESTINGHOUSE BUT PROCURED FROM BUSSMANN. SEE WESTINGHOUSE LETTER NSD-78-12, DATED 12-19-78 FOR FURTHER DETAILS.

GENERAL NOTES:-

1. THIS DRAWING IDENTIFIES OVERCURRENT PROTECTION DEVICES REQUIRED TO PROTECT CONTAINMENT PENETRATION ASSEMBLY CONDUCTORS IN ACCORDANCE WITH THE REQUIREMENTS OF NRC REGULATORY GUIDE 1.63, REVISION 1, DATED MAY 1977, AS INTERPRETED BY G/C INC.
2. THIS DRAWING IS IDENTIFIED AS NUCLEAR SAFETY RELATED SINCE IT CONTAINS INFORMATION FOR BOTH NON-CLASS 1E AND CLASS 1E PROTECTION DEVICES.
3. ALTHOUGH NRC REGULATORY GUIDE 1.63 REQUIRES THE USE OF TWO PROTECTIVE DEVICES WHEN PENETRATIONS CANNOT WITHSTAND THE MAXIMUM FAULT CURRENT INDEFINITELY, IT PERMITS THE USE OF NON-CLASS 1E PROTECTIVE DEVICES FOR PROTECTION OF NON-CLASS 1E CIRCUITS. HOWEVER, TO ENSURE THE CONTINUITY OF POWER TO CLASS 1E CIRCUITS, THE FAULT CURRENT PROTECTION DEVICES FOR CLASS 1E CIRCUITS MUST ALSO BE CLASS 1E.
4. THE LET-THRU ENERGY OF THE PROTECTIVE DEVICE SHALL NOT EXCEED THE SHORT CIRCUIT CURRENT WITHSTANDABILITY OF THE CONDUCTOR BEING PROTECTED.
5. THE SPECIFIC TEST SETPOINT AND ASSOCIATED RESPONSE TIME FOR EACH LISTED PROTECTIVE DEVICE WAS ESTABLISHED BY VENDOR SUPPLIED RECOMMENDATIONS AND/OR ENGINEERING EVALUATION.
6. EXCEPTIONS TO THE METHODOLOGY USED TO ESTABLISH SPECIFIC TEST SETPOINTS AND ASSOCIATED RESPONSE TIMES MAY EXIST. SPECIFIC TEST SETPOINT AND ASSOCIATED RESPONSE TIME VALUES MAY NOT ALWAYS BE CONSISTENT WITH VALUES DERIVED BY USING THE STANDARD METHODS.
7. CONTAINMENT PENETRATION ASSEMBLIES USED ON V.C. SUMMER NUCLEAR STATION WERE TESTED IN ACCORDANCE WITH IEEE 317 AND NRC REGULATORY GUIDE 1.63 USING MAXIMUM SHORT CIRCUIT CURRENT VALUES AND TIME REQUIREMENTS ESTABLISHED IN ACCORDANCE WITH ICEA STANDARD P-32-382 FORMULA.
8. AN EVALUATION TO ENSURE THAT ADEQUATE PRIMARY AND BACKUP OVERCURRENT PROTECTION, AND/OR JUSTIFICATION, EXISTS TO CONFIRM V.C. SUMMER NUCLEAR STATION COMPLIANCE TO NRC REGULATORY GUIDE 1.63 REQUIREMENTS IS DOCUMENTED IN CALCULATION NO. DC-350001/56 WHICH HAS BEEN REPLACED BY CALCULATION NOS. DC08470-006 AND DC08470-013.
9. G/C INC. SHOULD REVIEW ANY DESIGN CHANGES INVOLVING SIZING, TEST SETPOINTS, AND RESPONSE TIMES OF EXISTING AND NEW PENETRATION PROTECTIVE DEVICES FOR CONCURRENCE WITH NRC REGULATORY GUIDE 1.63 PRIOR TO COMPLETION OF THOSE DESIGN CHANGES.
10. CALCULATION NO. DC-350001/56 * WAS REPLACED BY CALCULATION NOS. DC08470-006 AND DC08470-013. CALCULATION NO. DC08470-006 PROVIDES THE DESIGN BASES FOR ESTABLISHING THE PENETRATION PROTECTION DEVICE TEST SETPOINTS. CALCULATION NO. DC08470-013 EVALUTES THE PRIMARY AND BACKUP PROTECTION FOR EACH SET OF PINS FEED THROUGH THE PENETRATION BASED ON THE DEVICE SIZES AND SETTINGS TO ENSURE COMPLIANCE WITH THE REQUIREMENTS OF NRC REGULATORY GUIDE 1.63. THESE CALCULATIONS SHALL BE REVISED AS REQUIRED WHENEVER ANY INFORMATION AS SHOWN ON THIS DRAWING IS CHANGED OR NEW INFORMATION ADDED.
11. PERIODIC TESTING AND SURVEILLANCE OF CONTAINMENT PENETRATION CONDUCTOR OVERCURRENT PROTECTIVE DEVICES SHALL BE PERFORMED IN ACCORDANCE WITH THE REQUIREMENTS ESTABLISHED BY TECHNICAL SPECIFICATION, SECTION 3/4.8.4.
12. ACCEPTABLE REPLACEMENT FUSES IDENTIFIED ON TABLE 1 OF S-200-961 (CLASS 1E AND PENETRATION PROTECTION FUSE LIST) MAY BE USED IN LIEU OF THOSES SHOWN ON SHEETS 5 THROUGH 10 OF THIS DRAWING PROVIDING THAT THE APPLICABLE TEST SETPOINT (RESISTANCE VALUES) ARE USED.

MANUFACTURER	TYPE	MATERIAL FUSE LINK	(MINIMUM) AT 25°C (77°F)	(MAXIMUM) AT 25°C (77°F)	(MINIMUM) AT 40°C (104°F)	(MAXIMUM) AT 40°C (104°F)
* BUSSMAN	KTS-R80	UNKNOWN	≥ 1.0 MILLIOHM	1.3 MILLIOHMS		
BUSSMAN	JJS-500	UNKNOWN	≥ 120 MICROHMS	150 MICROHMS		
BUSSMAN	KTU-800	SILVER	≥ 76 MICROHMS	90 MICROHMS		
GOULD	A6K-R80		≥			
GOULD	A6T-500		≥			
GOULD	A4BY-800		≥			
BUSSMAN	NON-2	COPPER	≥ 72.5 MILLIOHMS	92.5 MILLIOHMS	≥ 76.7 MILLIOHMS	97.8 MILLIOHMS
BUSSMAN	NON-1½	COPPER	≥ 115.0 MILLIOHMS	150.0 MILLIOHMS	≥ 121.6 MILLIOHMS	158.7 MILLIOHMS

THIS IS A NUCLEAR SAFETY RELATED DOCUMENT. NO DEVIATION SHALL BE INITIATED OR PERFORMED WITHOUT PRIOR DOCUMENTATION AND WRITTEN APPROVAL.

AMENDMENT 00-01
DECEMBER 2000

NO.	DATE	BY	REVISION	CHK'D	APP'D
8			REVISED PER CGSS-99-0173	CWH	CEH
7		RHM	REVISED PER CGSS-99-0311	WCR	SCS
6		DOJ	REVISED PER ECR-50144	RHM	GJR
5		JMH	REVISED PER MRF-22074	JHR	WLJ

FSAR Figure 8G-1
[illegible] ELECTRIC & GAS COMPANY
VIRGIL C. SUMMER NUCLEAR STATION
[illegible]
CONTAINMENT PENETRATION CONDUCTOR OVERCURRENT PROTECTION DEVICES
DESIGN ENGINEERING
JMH | JHR | WLJ
E-224-532 | 1 | 8

3/4" = 1'-0" 0' 5' 10' 15' 20'

...\rename\224532_0001.dgn Jun. 15, 1999 10:59:19

7.2 KV SWITCHGEAR

OVERCURRENT PROTECTION DEVICE									PENETRATION		LOAD	
LOCATION		APPLICATION		CLASS								
PARENT DEVICE NO.	UNIT NO. OR TAG NO.	PRI	BACK-UP	[illegible]	NSR	TYPE	TEST SET POINT	RESPONSE TIME	NO. XRP	CONDUCTOR SIZE	EQUIPMENT NO. - SYSTEM DESCRIPTION	REMARKS
XSW1A	3		X	X		7 KV G.E. BREAKER IAC66A2A IAC77A803A	LONG TIME 5544 AMPS LONG TIME 17,800 AMPS	≤15.33 SEC ≤2.0 SEC	0006	1000 MCM	XPP0030A-RC REACTOR COOLANT PUMP A	BUS 1A EMERGENCY FEED
XSW1A	5		X	X		7 KV G.E. BREAKER IAC66A2A IAC77A803A	LONG TIME 5544 AMPS LONG TIME 17,600 AMPS	≤15.33 SEC ≤2.0 SEC	0006	1000 MCM	XPP0030A-RC REACTOR COOLANT PUMP A	BUS 1A NORMAL FEED
XSW1A	9	X		X		7 KV G.E. BREAKER IAC66K20A	LONG TIME 3960 AMPS INSTANT 5808 AMPS	≤15.75 SEC N/A	0006	1000 MCM	XPP0030A-RC REACTOR COOLANT PUMP A	
XSW1B	3		X	X		7 KV G.E. BREAKER IAC66A2A IAC77A803A	LONG TIME 5544 AMPS LONG TIME 17,600 AMPS	≤15.33 SEC ≤2.0 SEC	0003	1000 MCM	XPP0030B-RC REACTOR COOLANT PUMP B	BUS 1B EMERGENCY FEED
XSW1B	5		X	X		7 KV G.E. BREAKER IAC66A2A IAC77A803A	LONG TIME 5544 AMPS LONG TIME 17,600 AMPS	≤15.33 SEC ≤2.0 SEC	0003	1000 MCM	XPP0030B-RC REACTOR COOLANT PUMP B	BUS 1B NORMAL FEED
XSW1B	7	X		X		7 KV G.E. BREAKER IAC66K20A	LONG TIME 3960 AMPS INSTANT 5808 AMPS	≤15.75 SEC N/A	0003	1000 MCM	XPP0030B-RC REACTOR COOLANT PUMP B	
XSW1C	3	X		X		7 KV G.E. BREAKER IAC66K20A	LONG TIME 3960 AMPS INSTANT 5808 AMPS	≤15.75 SEC N/A	0001	1000 MCM	XPP0030C-RC REACTOR COOLANT PUMP C	
XSW1C	9		X	X		7 KV G.E. BREAKER IAC66A2A IAC77A803A	LONG TIME 5544 AMPS LONG TIME 17,600 AMPS	≤15.33 SEC ≤2.0 SEC	0001	1000 MCM	XPP0030C-RC REACTOR COOLANT PUMP C	BUS 1C NORMAL FEED
XSW1C	11		X	X		7 KV G.E. BREAKER IAC66A2A IAC77A803A	LONG TIME 5544 AMPS LONG TIME 17,600 AMPS	≤15.33 SEC ≤2.0 SEC	0001	1000 MCM	XPP0030C-RC REACTOR COOLANT PUMP C	BUS 1C EMERGENCY FEED

480V SWITCHGEAR

OVERCURRENT PROTECTION DEVICE									PENETRATION		LOAD	
LOCATION		APPLICATION		CLASS								
PARENT DEVICE NO.	UNIT NO. OR TAG NO.	PRI	BACK-UP	[illegible]	NSR	TYPE	TEST SET POINT	RESPONSE TIME	NO. XRP	CONDUCTOR SIZE	EQUIPMENT NO. - SYSTEM DESCRIPTION	REMARKS
XSW1A3	1C	X		X		480V ITE POWER CIRCUIT BREAKER	LONG TIME 540 AMPS SHORT TIME 2700 AMPS INSTANT 3375 AMPS	≤98 SEC ≤0.17 SEC ≤0.09 SEC	0019	250 MCM	XFN0067A-AH CRDM COOLING SYSTEM FAN A	SEE NOTE 1
XSW1A3	2A	X		X		480V ITE POWER CIRCUIT BREAKER	LONG TIME 360 AMPS SHORT TIME 1350 AMPS INSTANT 1800 AMPS	≤30 SEC ≤0.17 SEC ≤0.09 SEC	0015	250 MCM	XFN0009A-AH RB REACTOR COMPARTMENT COOLING FAN A	SEE NOTE 1
XSW1A3	2C	X		X		480V ITE POWER CIRCUIT BREAKER	LONG TIME 744 AMPS SHORT TIME N/A INSTANT 4050 AMPS	≤98 SEC N/A ≤0.09 SEC	0015	250 MCM	XCR0004-FH RB POLAR CRANE	SEE NOTE 1
XSW1A3	3A	X		X		480V ITE POWER CIRCUIT BREAKER	LONG TIME 540 AMPS SHORT TIME 2700 AMPS INSTANT 3375 AMPS	≤98 SEC ≤0.17 SEC ≤0.09 SEC	0019	250 MCM	XFN0067D-AH CRDM COOLING SYSTEM FAN D	SEE NOTE 1
XSW1A3	4B		X	X		480V ITE POWER CIRCUIT BREAKER	LONG TIME 4800 AMPS SHORT TIME 7200 AMPS INSTANT N/A	≤12 SEC ≤0.50 SEC N/A	0015 0019	250 MCM	XFN0067A, 0067D, 009A-AH, XCR0004-FH	XSW1A3 MAIN INCOMING SEE NOTE 1
XSW1A3	4C		X	X		480V ITE POWER CIRCUIT BREAKER	LONG TIME 3000 AMPS SHORT TIME 4500 AMPS INSTANT N/A	≤12 SEC ≤0.32 SEC N/A	0015 0019	250 MCM	XFN0067A, 0067C, 0067D, 009A-AH, XCR0004-FH	BUS TIE TO XSW1C3 SEE NOTE 1
XSW1B3	2D	X		X		480V ITE POWER CIRCUIT BREAKER	LONG TIME 525 AMPS SHORT TIME 2250 AMPS INSTANT 3000 AMPS	≤98 SEC ≤0.17 SEC ≤0.09 SEC	0019	250 MCM	XFN0067B-AH CRDM COOLING SYSTEM FAN B	SEE NOTE 1
XSW1B3	3A	X		X		480V ITE POWER CIRCUIT BREAKER	LONG TIME 525 AMPS SHORT TIME 1125 AMPS INSTANT 1500 AMPS	≤12 SEC ≤0.17 SEC ≤0.09 SEC	0015	250 MCM	XFN0009B-AH RB REACTOR COMPARTMENT COOLING FAN B	SEE NOTE 1
XSW1B3	3B		X	X		480V ITE POWER CIRCUIT BREAKER	LONG TIME 4800 AMPS SHORT TIME 6000 AMPS INSTANT N/A	≤12 SEC ≤0.32 SEC N/A	0019	250 MCM	XFN0067B-AH CRDM COOLING SYSTEM FAN B	EMERGENCY FEED FROM XSW1DB1 SEE NOTE 1
XSW1B3	4B		X	X		480V ITE POWER CIRCUIT BREAKER	LONG TIME N/A SHORT TIME 9000 AMPS INSTANT N/A	≤12 SEC ≤0.50 SEC N/A	0019	250 MCM	XFN0067B-AH CRDM COOLING SYSTEM FAN B	XSW1B3 MAIN INCOMING SEE NOTE 1
XSW1C3	2D	X		X		480V ITE POWER CIRCUIT BREAKER	LONG TIME 540 AMPS SHORT TIME 2700 AMPS INSTANT 3375 AMPS	≤98 SEC ≤0.17 SEC ≤0.09 SEC	0019	250 MCM	XFN00067C-AH CRDM COOLING SYSTEM FAN C	SEE NOTE 1
XSW1C3	3B		X	X		480V ITE POWER CIRCUIT BREAKER	LONG TIME 4800 AMPS SHORT TIME 7200 AMPS INSTANT N/A	≤12 SEC ≤0.50 SEC N/A	0019	250 MCM	XFN00067C-AH CRDM COOLING SYSTEM FAN C	XSW1C3 MAIN INCOMING SEE NOTE 1
XSW1DA1	4B		X		X	480V ITE POWER CIRCUIT BREAKER	LONG TIME 6300 AMPS SHORT TIME 9000 AMPS INSTANT N/A	≤12 SEC ≤0.50 SEC N/A	0010 0011	250 MCM	MFN0096C, 0097C, 0096A, 0097A-AH	XSW1DA1 MAIN INCOMING SEE NOTE 1
XSW1DA1	5B	X			X	480V ITE POWER CIRCUIT BREAKER	LONG TIME 1260 AMPS SHORT TIME 5400 AMPS INSTANT 7200 AMPS	≤30 SEC ≤0.17 SEC ≤0.09 SEC	0010	250 MCM	MFN0096C-AH RB COOLING UNIT XFN65A NORMAL MOTOR	SEE NOTE 1
XSW1DA1	5C	X			X	480V ITE POWER CIRCUIT BREAKER	LONG TIME 525 AMPS SHORT TIME 1500 AMPS INSTANT 2250 AMPS	≤30 SEC ≤0.17 SEC ≤0.09 SEC	0011	250 MCM	MFN0097A-AH RB COOLING UNIT XFN64A EMERGENCY MOTOR	SEE NOTE 1
XSW1DA1	6B	X			X	480V ITE POWER CIRCUIT BREAKER	LONG TIME 1260 AMPS SHORT TIME 5400 AMPS INSTANT 7200 AMPS	≤30 SEC ≤0.17 SEC ≤0.09 SEC	0011	250 MCM	MFN0096A-AH RB COOLING UNIT XFN64A NORMAL MOTOR	SEE NOTE 1
XSW1DA1	6C	X			X	480V ITE POWER CIRCUIT BREAKER	LONG TIME 525 AMPS SHORT TIME 1500 AMPS INSTANT 2250 AMPS	≤30 SEC ≤0.17 SEC ≤0.09 SEC	0010	250 MCM	MFN0097C-AH RB COOLING UNIT XFN65A EMERGENCY MOTOR	SEE NOTE 1
XSW1DA2	4B		X		X	480V ITE POWER CIRCUIT BREAKER	LONG TIME 4800 AMPS SHORT TIME 7200 AMPS INSTANT N/A	≤12 SEC ≤0.50 SEC N/A	0010	250 MCM	XHR0004A-HR H_2 RECOMBINER POWER PANEL	XSW1DA2 MAIN INCOMING SEE NOTE 1
XSW1DA2	5C	X			X	480V ITE POWER CIRCUIT BREAKER	LONG TIME 315 AMPS SHORT TIME N/A INSTANT 900 AMPS	≤12 SEC N/A ≤0.09 SEC	0011	250 MCM	XHR0004A-HR H_2 RECOMBINER POWER PANEL	SEE NOTE 1
XSW1DB1	4B		X		X	480V ITE POWER CIRCUIT BREAKER	LONG TIME 6300 AMPS SHORT TIME 9000 AMPS INSTANT N/A	≤12 SEC ≤0.50 SEC N/A	0007 0014	250 MCM	MFN0096B, 0097B, 0096D, 0097D-AH	XSW1DB1 MAIN INCOMING SEE NOTE 1
XSW1DB1	6C	X			X	480V ITE POWER CIRCUIT BREAKER	LONG TIME 525 AMPS SHORT TIME 1500 AMPS INSTANT 2250 AMPS	≤30 SEC ≤0.17 SEC ≤0.09 SEC	0014	250 MCM	MFN0097D-AH RB COOLING UNIT XFN65B EMERGENCY MOTOR	SEE NOTE 1
XSW1DB1	6D	X			X	480V ITE POWER CIRCUIT BREAKER	LONG TIME 525 AMPS SHORT TIME 1500 AMPS INSTANT 2250 AMPS	≤30 SEC ≤0.17 SEC ≤0.09 SEC	0007	250 MCM	MFN0097B-AH RB COOLING UNIT XFN64B EMERGENCY MOTOR	SEE NOTE 1
XSW1DB1	7B	X			X	480V ITE POWER CIRCUIT BREAKER	LONG TIME 1260 AMPS SHORT TIME 5400 AMPS INSTANT 7200 AMPS	≤30 SEC ≤0.17 SEC ≤0.09 SEC	0007	250 MCM	MFN0096B-AH RB COOLING UNIT XFN64B NORMAL MOTOR	SEE NOTE 1
XSW1DB1	7C	X			X	480V ITE POWER CIRCUIT BREAKER	LONG TIME 1260 AMPS SHORT TIME 5400 AMPS INSTANT 7200 AMPS	≤30 SEC ≤0.17 SEC ≤0.09 SEC	0014	250 MCM	MFN0096D-AH RB COOLING UNIT XFN65B NORMAL MOTOR	SEE NOTE 1
XSW1DB2	4B		X		X	480V ITE POWER CIRCUIT BREAKER	LONG TIME 4800 AMPS SHORT TIME 7200 AMPS INSTANT N/A	≤12 SEC ≤0.50 SEC N/A	0007	250 MCM	XHR0004B-HR H_2 RECOMBINER POWER PANEL	XSW1DB2 MAIN INCOMING SEE NOTE 1
XSW1DB2	5C	X			X	480V ITE POWER CIRCUIT BREAKER	LONG TIME 315 AMPS SHORT TIME N/A INSTANT 900 AMPS	≤12 SEC N/A ≤0.09 SEC	0014	250 MCM	XHR0004B-HR H_2 RECOMBINER POWER PANEL	SEE NOTE 1

480V MOTOR CONTROL CENTERS

OVERCURRENT PROTECTION DEVICE									PENETRATION		LOAD	
LOCATION		APPLICATION		CLASS								
PARENT DEVICE NO.	UNIT NO. OR TAG NO.	PRI	BACK-UP	[illegible]	NSR	TYPE	TEST SET POINT	RESPONSE TIME	NO. XRP	CONDUCTOR SIZE	EQUIPMENT NO. - SYSTEM DESCRIPTION	REMARKS
XMC1A3X	1AC	X		X		SQUARE D FHL36080	240 AMPS	≤200 SEC	0053	#4 AWG	XTF9003-EM/ RECEPTACLE TRANSFORMER 3	
XMC1A3X	1AC		X	X		SQUARE D IFL34080	240 AMPS	≤200 SEC	0053	#4 AWG	XTF9003-EM/ RECEPTACLE TRANSFORMER 3	
XMC1A3X	3EG	X		X		SQUARE D FHL36015	45 AMPS	≤100 SEC	0018	#4 AWG	XDO 0001-IC TERMINAL BOX	
XMC1A3X	3EG		X	X		SQUARE D IFL34015	45 AMPS	≤100 SEC	0018	#4 AWG	XDO 0001-IC TERMINAL BOX	
XMC1A3X	4AD	X		X		SQUARE D FHL36015-13M	225 AMPS	N/A	0053	#4 AWG	XPP0059A-NO/ INCORE INSTRUMENT CHASE SUMP PUMP A	
XMC1A3X	4AD		X	X		SQUARE D IFL34015	45 AMPS	≤100 SEC	0053	#4 AWG	XPP0059A-NO/ INCORE INSTRUMENT CHASE SUMP PUMP A	
XMC1A3X	4EH	X		X		SQUARE D FHL3607-12M	105 AMPS	N/A	0053	#4 AWG	XPP0115A-NO/ RB SUMP PUMP A	
XMC1A3X	4EH		X	X		SQUARE D IFL34015	45 AMPS	≤100 SEC	0053	#4 AWG	XPP0115A-NO/ RB SUMP PUMP A	
XMC1A3X	4IL	X		X		SQUARE D FHL36015-13M	225 AMPS	N/A	0018	#4 AWG	XPP0138-NO/ LEAK DETECTION SUMP PUMP	
XMC1A3X	4IL		X	X		SQUARE D IFL34015	45 AMPS	≤100 SEC	0018	#4 AWG	XPP0138-NO/ LEAK DETECTION SUMP PUMP	
XMC1A3X	6CG	X		X		SQUARE D FHL36050-16M	750 AMPS	N/A	0053	#1/0 AWG	XPP0051A-WL/ RC DRAIN TANK - PUMP A	
XMC1A3X	6CG		X	X		SQUARE D IFL34070	210 AMPS	≤200 SEC	0053	#1/0 AWG	XPP0051A-WL/ RC DRAIN TANK - PUMP A	
XMC1A3X	9AD	X		X		SQUARE D FHL36050-16M	750 AMPS	N/A	0053	#1/0 AWG	XFN0070A-AH/ SECONDARY COMPT (LOOP C) COOLING FAN A	
XMC1A3X	9AD		X	X		SQUARE D IFL36050	150 AMPS	≤200 SEC	0053	#1/0 AWG	XFN0070A-AH/ SECONDARY COMPT (LOOP C) COOLING FAN A	
XMC1A3X	9IM	X		X		SQUARE D FHL3603-11M	45 AMPS	N/A	0033	#4 AWG	XYT9593A-CC/ MOV REACTOR COOLANT PUMP A THERMAL BARRIER	
XMC1A3X	9IM		X	X		SQUARE D IFL34015	45 AMPS	≤100 SEC	0033	#4 AWG	XYT9593A-CC/ MOV REACTOR COOLANT PUMP A THERMAL BARRIER	
XMC1A3X	10CF	X	-	X		SQUARE D FHL36050-16M	750 AMPS	N/A	0053	#1/0 AWG	XFN0069A-AH/ SECONDARY COMPT (LOOP B) COOLING FAN A	
XMC1A3X	10CF		X	X		SQUARE D IFL36050	150 AMPS	≤200 SEC	0053	#1/0 AWG	XFN0069A-AH/ SECONDARY COMPT (LOOP B) COOLING FAN A	
XMC1A3X	10GK	X		X		SQUARE D FHL36100-18M	1500 AMPS	N/A	0018	#1/0 AWG	XFN0066A-AH/RB CHARCOAL CLEANUP UNIT FAN A	
XMC1A3X	10GK		X	X		SQUARE D IFL36070	210 AMPS	≤200 SEC	0018	#1/0 AWG	XFN0066A-AH/RB CHARCOAL CLEANUP UNIT FAN A	
XMC1A3X	11AD	X		X		SQUARE D FHL36015-13M	225 AMPS	N/A	0033	#4 AWG	XPP0149-SW/DRPI COOLING UNIT BOOSTER PUMP	
XMC1A3X	11AD		X	X		SQUARE D IFL34015	45 AMPS	≤100 SEC	0033	#4 AWG	XPP0149-SW/DRPI COOLING UNIT BOOSTER PUMP	
XMC1A3X	11EH	X		X		SQUARE D FHL36050-16M	750 AMPS	N/A	0053	#1/0 AWG	XFN0068A-AH/ SECONDARY COMPT (LOOP A) COOLING FAN A	
XMC1A3X	11EH		X	X		SQUARE D IFL34050	150 AMPS	≤200 SEC	0053	#1/0 AWG	XFN0068A-AH/ SECONDARY COMPT (LOOP A) COOLING FAN A	
XMC1B2X	3AE	X		X		SQUARE D FHL36015-13M	225 AMPS	N/A	0033	#4 AWG	XVG9583-CC/MOV GATE EXCESS LETDOWN HX	
XMC1B2X	3AE		X	X		SQUARE D IFL34015	45 AMPS	≤100 SEC	0033	#4 AWG	XVG9583-CC/MOV GATE EXCESS LETDOWN HX	
XMC1B2X	5IM	X		X		SQUARE D FHL36015-13M	225 AMPS	N/A	0033	#4 AWG	XVG9576-CC/MOV, ISOLATION RCDT	
XMC1B2X	5IM		X	X		SQUARE D IFL34020	60 AMPS	≤100 SEC	0033	#4 AWG	XVG9576-CC/MOV, ISOLATION RCDT	
XMC1B3X	3EH	X		X		SQUARE D FHL36015-13M	225 AMPS	N/A	0018	#4 AWG	XPP0059B-NO/ INCORE INSTR CHASE SUMP PUMP B	
XMC1B3X	3EH		X	X		SQUARE D IFL34015	45 AMPS	≤100 SEC	0018	#4 AWG	XPP0059B-NO/ INCORE INSTR CHASE SUMP PUMP B	

NOTES:-

1. REFER TO G/C DRAWING SS-200-927 FOR 480V AC LOAD CENTER BREAKER TRIP DEVICE TYPE AND ASSOCIATED RELAY SETTINGS.

1/4"= 1'-0" 0' 5' 10' 15' 20'

NUCLEAR SAFETY RELATED

Amendment 00-01
December 2000

DRAWING LEGIBILITY CLASS 2
SCE&G CAD ENHANCED

NO.	DATE	BY	REVISION	CKD. BY	LE APPROVAL
3	10/12/99	JMR	REVISED PER CGSS-99-0489	MGR	DKW

FSAR Figure 8G-2

SOUTH CAROLINA ELECTRIC & GAS COMPANY
VIRGIL C. SUMMER NUCLEAR STATION
ELECTRICAL
CONTAINMENT PENETRATION CONDUCTOR
OVERCURRENT PROTECTION DEVICES
DESIGN ENGINEERING
SCE&G A SCANA COMPANY — V. C. SUMMER NUCLEAR STATION JENKINSVILLE, S. C.

MADE	CHECKED	LE APPROVAL
1. JMR	2. MGR	3. DKW

SCALE NO SCALE — DRAWING NUMBER E-224-532 — SHT. NUMBER 2 — REV 3

R224532_0002.m(5078.jr14325) JR14325@jr14325. Wed Oct 13 06:24:52 CDT 1999

480V MOTOR CONTROL CENTERS

OVERCURRENT PROTECTION DEVICE									PENETRATION		LOAD EQUIPMENT NO. - SYSTEM DESCRIPTION	REMARKS
LOCATION		APPLICATION		CLASS			TYPE	TEST SET POINT	RESPONSE TIME	NO. ZONE	CONDUCTOR SIZE		
PARENT DEVICE NO.	UNIT NO. OR TAG NO.	PRI	BACK-UP										
2XE1E22	31L	X				X	3SBABE D FWL36243-130	185 AMPS	N/A	0018	#4 AWG		
2XE1E32	31L			X	X	X	3SBABE D 1FL34615	45 AMPS	≤100 SEC	0019	#4 AWG		
2XE1E42	0CX	X				X	3SBABE D FWL30698	270 AMPS	≤100 SEC	0003	#1/0 AWG		
2XE1E52	0CX			X	X	X	3SBABE D 1FL34698	270 AMPS	≤200 SEC	0053	#1/0 AWG		
2XE1E23	0BJ	X				X	3SBABE D FWL30698	240 AMPS	≤200 SEC	0003	#1/0 AWG		
2XE1E33	0BJ			X	X	X	3SBABE D 1FL34698	240 AMPS	≤200 SEC	0053	#1/0 AWG		
2XE1E43	0AB	X				X	3SBABE D FWL30697-130	195 AMPS	N/A	0018	#4 AWG		
2XE1E53	0AB			X	X	X	3SBABE D 1FL34615	45 AMPS	≤100 SEC	0019	#4 AWG		
2XE1E63	09FJ	X				X	3SBABE D FWL34180-105	1380 AMPS	N/A	0018	#1/0 AWG		
2XE1E24	09FJ			X	X	X	3SBABE D 1FL34473	710 AMPS	≤200 SEC	0014	#1/0 AWG		
2XE1E34	34B	X				X	3SBABE D FWL36850-150	750 AMPS	N/A	0003	#1/0 AWG		
2XE1E44	34B			X	X	X	3SBABE D 1FL34698	180 AMPS	≤200 SEC	0053	#1/0 AWG		
2XE1E54	33E	X				X	3SBABE D FWL36250-150	250 AMPS	N/A	0003	#1/0 AWG		
2XE1E64	33E			X	X	X	3SBABE D 1FL34698	180 AMPS	≤200 SEC	0053	#1/0 AWG		
2XE1E25	31L	X				X	3SBABE D FWL36250-150	250 AMPS	N/A	0003	#1/0 AWG		
2XE1E35	31L			X	X	X	3SBABE D 1FL34698	180 AMPS	≤200 SEC	0053	#1/0 AWG		
2XE1E45	4JE	X				X	3SBABE D FWL36415-130	325 AMPS	N/A	0034	#4 AWG		
2XE1E55	4JE			X	X	X	3SBABE D 1FL34615	45 AMPS	≤100 SEC	0034	#4 AWG		
2XE1E65	4BJ	X				X	3SBABE D FWL36698	240 AMPS	≤200 SEC	0003	#1/0 AWG		
2XE1E26	4BJ			X	X	X	3SBABE D 1FL34698	240 AMPS	≤200 SEC	0053	#1/0 AWG		
2XE1E36	34B	X				X	3SBABE D FWL36315	45 AMPS	≤100 SEC	0018	#4 AWG		
2XE1E46	34B			X	X	X	3SBABE D 1FL34615	45 AMPS	≤100 SEC	0019	#4 AWG		
2XE1E56	34H	X				X	3SBABE D FWL36830-150	450 AMPS	N/A	0018	#4 AWG		
2XE1E66	34K			X	X	X	3SBABE D 1FL34625	75 AMPS	≤100 SEC	0018	#4 AWG		
2XE1E27	39L	X				X	3SBABE D 8AL36288	600 AMPS	≤200 SEC	0019	250 MCM		
2XE1E37	39L			X	X	X	3SBABE D 8XL34298	600 AMPS	≤200 SEC	0018	250 MCM		
2XE1E47	6JL	X				X	3SBABE D FWL36850-150	750 AMPS	N/A	0018	#1/0 AWG		
2XE1E57	36K			X	X	X	3SBABE D 1FL34678	210 AMPS	≤200 SEC	0018	#1/0 AWG		
2XE1E67	36L	X				X	3SBABE D 8AL36298	600 AMPS	≤200 SEC	0018	250 MCM		
2XE1E28	9CL	X				X	3SBABE D 8XL34298	600 AMPS	≤200 SEC	0015	250 MCM		
2XE1E38	24D	X				X	3SBABE D FWL30830-150	450 AMPS	N/A	0032	#4 AWG		
2XE1E48	24D			X	X	X	3SBABE D 1FL34625	75 AMPS	≤120 SEC	0035	#4 AWG		
2XE1E58	26H	X				X	3SBABE D FWL36850-150	750 AMPS	N/A	0018	#1/0 AWG		
2XE1E68	26B			X	X	X	3SBABE D 1FL34698	180 AMPS	≤200 SEC	0018	#1/0 AWG		
2XE1E29	24L	X				X	3SBABE D FWL36850-150	750 AMPS	N/A	0018	#1/0 AWG		

OVERCURRENT PROTECTION DEVICE									PENETRATION		LOAD EQUIPMENT NO. - SYSTEM DESCRIPTION	REMARKS
LOCATION		APPLICATION		CLASS			TYPE	TEST SET POINT	RESPONSE TIME	NO. ZONE	CONDUCTOR SIZE		
PARENT DEVICE NO.	UNIT NO. OR TAG NO.	PRI	BACK-UP										
1XE1C22	31L				X	X	3SBABE D 1FL34658	230 AMPS	≤200 SEC	0010	#1/0 AWG		
1XE1C31	36H	X		-		X	3SBABE D FWL36967-130	185 AMPS	N/A	0003	#4 AWG		
1XE1C32	32B			X	X		3SBABE D 1FL34615	45 AMPS	≤100 SEC	0053	#4 AWG		
1XE1C21	31L	X				X	3SBABE D FWL36959-100	230 AMPS	N/A	0061	#4 AWG		
1XE1C33	31L			X	X		3SBABE D 1FL34658	150 AMPS	≤200 SEC	0053	#4 AWG		
1XE1C23	42E	X				X	3SBABE D FWL36698	240 AMPS	≤200 SEC	0016	#1/0 AWG		
1XE1C31	42E			X	X		3SBABE D 1FL34698	240 AMPS	≤200 SEC	0018	#1/0 AWG		
1XE1C24	41B	X				X	3SBABE D FWL36815-130	225 AMPS	N/A	0033	#4 AWG		
1XE1C34	41B			X	X		3SBABE D 1FL34615	45 AMPS	≤100 SEC	0033	#4 AWG		
1XE1C25	54B	X				X	3SBABE D FWL36815	45 AMPS	≤1000 SEC	0051	#4 AWG		
1XE1C35	54B			X	X		3SBABE D 1FL34615	45 AMPS	≤100 SEC	0053	#4 AWG		
1XE1C21	54H	X				X	3SBABE D FWL36815	45 AMPS	≤1000 SEC	0010	#4 AWG		
1XE1C26	52B			X	X		3SBABE D 1FL34615	45 AMPS	≤100 SEC	0016	#4 AWG		
1XE1C36	04B	X			X		3SBABE D FWL36826-130	450 AMPS	N/A	0053	#4 AWG		
1XE1C26	04B			X	X		3SBABE D 1FL34625	26 AMPS	≤100 SEC	0053	#4 AWG		
1XE1C36	0KE	X				X	3SBABE D FWL36826-130	450 AMPS	N/A	0010	#4 AWG		
1XE1C27	0KE			X	X		3SBABE D 1FL34625	26 AMPS	≤100 SEC	0016	#4 AWG		
1XE1C37	31B	X				X	3SBABE D FWL36875-130	225 AMPS	N/A	0020	#4 AWG		
1XE1C28	31B			X	X		3SBABE D 1FL34625	45 AMPS	≤100 SEC	0020	#4 AWG		
1XE1C38	51B	X				X	3SBABE D FWL36875-130	225 AMPS	N/A	0025	#4 AWG		
1XE1C29	51B			X	X		3SBABE D 1FL34615	45 AMPS	≤100 SEC	0020	#4 AWG		
1XE1C39	31E	X				X	3SBABE D FWL36875-130	225 AMPS	N/A	0020	#4 AWG		
1XE1C2A	31E			X	X		3SBABE D 1FL34615	45 AMPS	≤100 SEC	0020	#4 AWG		
1XE1C3A	34E	X				X	3SBABE D FWL36815	45 AMPS	≤100 SEC	0020	#4 AWG		
1XE1C2B	34E			X	X		3SBABE D 1FL34615	45 AMPS	≤100 SEC	0020	#4 AWG		
1XE1C3B	34E	X				X	3SBABE D FWL36815	45 AMPS	≤100 SEC	0020	#4 AWG		
1XE1C2C	34E			X	X		3SBABE D 1FL34615	45 AMPS	≤100 SEC	0020	#4 AWG		
1XE1C3C	34E	X				X	3SBABE D FWL36815	45 AMPS	≤100 SEC	0020	#4 AWG		
1XE1C2D	34E			X	X		3SBABE D 1FL34615	45 AMPS	≤100 SEC	0020	#4 AWG		
1XE1C3D	34E	X				X	3SBABE D FWL36815	45 AMPS	≤100 SEC	0020	#4 AWG		
1XE1C2E	34E			X	X		3SBABE D 1FL34615	45 AMPS	≤100 SEC	0020	#4 AWG		
1XE1C3E	34E	X				X	3SBABE D FWL36815	45 AMPS	≤100 SEC	0020	#4 AWG		
1XE1C2F	34E			X	X		3SBABE D 1FL34615	45 AMPS	≤100 SEC	0020	#4 AWG		
1XE1C3F	34E	X				X	3SBABE D FWL36815	45 AMPS	≤100 SEC	0020	#4 AWG		
1XE1C2G	34E			X	X		3SBABE D 1FL34615	45 AMPS	≤100 SEC	0020	#4 AWG		
1XE1C3G	34E	X				X	3SBABE D FWL36815	45 AMPS	≤100 SEC	0020	#4 AWG		
1XE1C2H	34E			X	X		3SBABE D 1FL34615	45 AMPS	≤100 SEC	0020	#4 AWG		
1XE1C3H	34E	X				X	3SBABE D FWL36815	45 AMPS	≤100 SEC	0020	#4 AWG		
1XE1C2J	34E			X	X		3SBABE D 1FL34615	45 AMPS	≤100 SEC	0020	#4 AWG		
1XE1C3J	34E	X				X	3SBABE D FWL36815	45 AMPS	≤100 SEC	0020	#4 AWG		
1XE1C2K	34E			X	X		3SBABE D 1FL34615	45 AMPS	≤100 SEC	0020	#4 AWG		
1XE1C3K	34E	X				X	3SBABE D FWL36815	45 AMPS	≤100 SEC	0020	#4 AWG		
1XE1C2L	34E			X	X		3SBABE D 1FL34615	45 AMPS	≤100 SEC	0020	#4 AWG		
1XE1C3L	34E	X				X	3SBABE D FWL36815	45 AMPS	≤100 SEC	0020	#4 AWG		
1XE1C2M	34E			X	X		3SBABE D 1FL34615	45 AMPS	≤100 SEC	0020	#4 AWG		
1XE1C3M	34E	X				X	3SBABE D FWL36815	45 AMPS	≤100 SEC	0020	#4 AWG		
1XE1C2N	34E			X	X		3SBABE D 1FL34615	45 AMPS	≤100 SEC	0020	#4 AWG		
1XE1C3N	34E	X				X	3SBABE D FWL36815	45 AMPS	≤100 SEC	0020	#4 AWG		
1XE1C2P	34E			X	X		3SBABE D 1FL34615	45 AMPS	≤100 SEC	0020	#4 AWG		
1XE1C3P	34E	X				X	3SBABE D FWL36815	45 AMPS	≤100 SEC	0020	#4 AWG		
1XE1C2Q	34E			X	X		3SBABE D 1FL34615	45 AMPS	≤100 SEC	0020	#4 AWG		
1XE1C3Q	34E	X				X	3SBABE D FWL36815	45 AMPS	≤100 SEC	0020	#4 AWG		
1XE1C2R	34E			X	X		3SBABE D 1FL34615	45 AMPS	≤100 SEC	0020	#4 AWG		
1XE1C3R	34E	X				X	3SBABE D FWL36815	45 AMPS	≤100 SEC	0020	#4 AWG		
1XE1C2S	34E			X	X		3SBABE D 1FL34615	45 AMPS	≤100 SEC	0020	#4 AWG		
1XE1C3S	34E	X				X	3SBABE D FWL36815	45 AMPS	≤100 SEC	0020	#4 AWG		
1XE1C2T	34E			X	X		3SBABE D 1FL34615	45 AMPS	≤100 SEC	0020	#4 AWG		
1XE1C3T	34E	X				X	3SBABE D FWL36815	45 AMPS	≤100 SEC	0020	#4 AWG		
1XE1C2U	34E			X	X		3SBABE D 1FL34615	45 AMPS	≤100 SEC	0020	#4 AWG		
1XE1C3U	34E	X				X	3SBABE D FWL36815	45 AMPS	≤100 SEC	0020	#4 AWG		
1XE1C2V	34E			X	X		3SBABE D 1FL34615	45 AMPS	≤100 SEC	0020	#4 AWG		
1XE1C3V	34E	X				X	3SBABE D FWL36815	45 AMPS	≤100 SEC	0020	#4 AWG		
1XE1C2W	34E			X	X		3SBABE D 1FL34615	45 AMPS	≤100 SEC	0020	#4 AWG		
1XE1C3W	34E	X				X	3SBABE D FWL36815	45 AMPS	≤100 SEC	0020	#4 AWG		
1XE1C2X	34E			X	X		3SBABE D 1FL34615	45 AMPS	≤100 SEC	0020	#4 AWG		
1XE1C3X	34E	X				X	3SBABE D FWL36815	45 AMPS	≤100 SEC	0020	#4 AWG		
1XE1C2Y	34E			X	X		3SBABE D 1FL34615	45 AMPS	≤100 SEC	0020	#4 AWG		
1XE1C3Y	34E	X				X	3SBABE D FWL36815	45 AMPS	≤100 SEC	0020	#4 AWG		
1XE1C2Z	34E			X	X		3SBABE D 1FL34615	45 AMPS	≤100 SEC	0020	#4 AWG		
1XE1C3Z	34E	X				X	3SBABE D FWL36815	45 AMPS	≤100 SEC	0020	#4 AWG		

OVERCURRENT PROTECTION DEVICE									PENETRATION		LOAD EQUIPMENT NO. - SYSTEM DESCRIPTION	REMARKS
LOCATION		APPLICATION		CLASS			TYPE	TEST SET POINT	RESPONSE TIME	NO. ZONE	CONDUCTOR SIZE		
PARENT DEVICE NO.	UNIT NO. OR TAG NO.	PRI	BACK-UP										
2XE1A2E	11JE	X				X	3SBABE D FWL36815	45 AMPS	≤100 SEC	0017	#4 AWG		
2XE1A22	11JE			X		X	3SBABE D 1FL34615	50 AMPS	≤100 SEC	0017	#4 AWG		
2XE1A2F	31JE	X				X	3SBABE D FWL36815	45 AMPS	≤100 SEC	0030	#4 AWG		
2XE1A2Y	31JE			X		X	3SBABE D 1FL34615	45 AMPS	≤100 SEC	0029	#4 AWG		
2XE1A2Y	31JE			X		X	3SBABE D 1FL34615	45 AMPS	≤100 SEC	0029	#4 AWG		
2XE1A2Y	31JE	X				X	3SBABE D FWL36875-130	150 AMPS	≤200 SEC	0030	#4 AWG		
2XE1A2Y	31JE			X		X	3SBABE D 1FL34630	150 AMPS	≤200 SEC	0030	#4 AWG		
2XE1A2Y	14CE	X				X	3SBABE D FWL36815	45 AMPS	≤100 SEC	0030	#4 AWG		
2XE1A2Y	14CE			X		X	3SBABE D 1FL34615	45 AMPS	≤100 SEC	0030	#4 AWG		
2XE1A2Y	13CE	X				X	3SBABE D FWL36815	45 AMPS	≤100 SEC	0030	#4 AWG		
2XE1A2Y	13CE			X		X	3SBABE D 1FL34615	45 AMPS	≤100 SEC	0030	#4 AWG		
2XE1A2Y	13ML	X				X	3SBABE D FWL36815	45 AMPS	≤100 SEC	0030	#4 AWG		
2XE1A2Y	13ML			X		X	3SBABE D 1FL34615	45 AMPS	≤100 SEC	0030	#4 AWG		
2XE1A2Y	13JE	X				X	3SBABE D FWL36815	45 AMPS	≤100 SEC	0030	#4 AWG		
2XE1A2Y	11JE			X		X	3SBABE D 1FL34615

480V MOTOR CONTROL CENTERS

OVERCURRENT PROTECTION DEVICE									PENETRATION		LOAD EQUIPMENT NO SYSTEM DESCRIPTION	REMARKS
LOCATION		APPLICATION		CLASS								
PARENT DEVICE NO.	UNIT NO OR TAG NO	PRI	BACK-UP	2E2C	2E2C	TYPE	TEST SET POINT	RESPONSE TIME	NO. XRP	COND. SIZE		
XMC1DB2Y	121M	X			X	SQUARE D FHL36015-13M	225 AMPS	N/A	0030	#4 AWG	XVT8096B-RC/ REACTOR HEAD VENT VALVE TO PRESSURE RELIEF TANK	
XMC1DB2Y	121M		X		X	SQUARE D IFL34020	60 AMPS	≤ 100 SEC	0030	#4 AWG	XVT8096B-RC/ REACTOR HEAD VENT VALVE TO PRESSURE RELIEF TANK	
XMC1DB2Y	161M	X			X	SQUARE D FHL36100	300 AMPS	≤ 200 SEC	0030	(2) #4 AWG	XVG8808B-SI ACCUMULATOR B ISOLATION VALVE	
XMC1DB2Y	161M		X		X	SQUARE D IFL34100	300 AMPS	≤ 200 SEC	0030	(2) #4 AWG	XVG8808B-SI ACCUMULATOR B ISOLATION VALVE	
XMC1DB2Y	181M	X			X	SQUARE D FHL36015	45 AMPS	≤ 100 SEC	0018	#4 AWG	XVG3108C-SW/ RB RECIRCULATING UNIT C ISOLATION VALVE	
XMC1DB2Y	181M		X		X	SQUARE D IFL34015	45 AMPS	≤ 100 SEC	0018	#4 AWG	XVG3108C-SW/ RB RECIRCULATING UNIT C ISOLATION VALVE	
XMC1DB2Y	191M	X			X	SQUARE D FHL36015	45 AMPS	≤ 100 SEC	0018	#4 AWG	XVG3108D-SW/ RB RECIRCULATING UNIT C ISOLATION VALVE	
XMC1DB2Y	191M		X		X	SQUARE D IFL34015	45 AMPS	≤ 100 SEC	0018	#4 AWG	XVG3108D-SW/ RB RECIRCULATING UNIT C ISOLATION VALVE	
XMC1DB2Y	201M	X			X	SQUARE D FHL36015	45 AMPS	≤ 100 SEC	0030	#4 AWG	XVG3109C-SW/ RB RECIRCULATING UNIT C ISOLATION VALVE	
XMC1DB2Y	201M		X		X	SQUARE D IFL34015	45 AMPS	≤ 100 SEC	0030	#4 AWG	XVG3109C-SW/ RB RECIRCULATING UNIT C ISOLATION VALVE	
XMC1DB2Y	211M	X			X	SQUARE D FHL36015	45 AMPS	≤ 100 SEC	0030	#4 AWG	XVG3109D-SW/ RB RECIRCULATING UNIT C ISOLATION VALVE	
XMC1DB2Y	211M		X		X	SQUARE D IFL34015	45 AMPS	≤ 100 SEC	0030	#4 AWG	XVG3109D-SW/ RB RECIRCULATING UNIT C ISOLATION VALVE	
XMC1DB2Y	22CG	X			X	SQUARE D FHL36050	150 AMPS	≤ 200 SEC	0101B	#4 AWG	XVG8811B-SI/ RECIRCULATING SUMP TO RHR PUMP A ISOLATION VALVE	
XMC1DB2Y	22CG		X		X	SQUARE D IFL34050	150 AMPS	≤ 200 SEC	0101B	#4 AWG	XVG8811B-SI/ RECIRCULATING SUMP TO RHR PUMP A ISOLATION VALVE	
XMC1DB2Y	23FJ	X			X	SQUARE D FHL36015-13M	225 AMPS	N/A	0030	#4 AWG	XVG8095B-RC/ REACTOR HEAD VENT VALVE TO PRESSURE RELIEF TANK	
XMC1DB2Y	23FJ		X		X	SQUARE D IFL34020	60 AMPS	≤ 100 SEC	0030	#4 AWG	XVG8095B-RC/ REACTOR HEAD VENT VALVE TO PRESSURE RELIEF TANK	

MISCELLANEOUS FUSE PANELS (AC)

OVERCURRENT PROTECTION DEVICE									PENETRATION		LOAD EQUIPMENT NO SYSTEM DESCRIPTION	REMARKS
LOCATION		APPLICATION		CLASS								
PARENT DEVICE NO.	UNIT NO OR TAG NO	PRI	BACK-UP	2E2C	2E2C	TYPE	TEST SET POINT	RESPONSE TIME	NO. XRP	COND. SIZE		
APN4104	MAIN FUSED DISCONN. SWITCH		X	X		BUSSMAN KTU-800	≥ 76 MICROHMS	N/A		#1/0 AWG	PRESSURE HEATER NOS. 1-8, 21-30 47-58-RC	
APN4104	DISCONN. SWITCH 1							N/A	0022	#1/0 AWG		SPARE
APN4104	FUSED DISCONN. SWITCH 2	X		X		BUSSMAN KTS-R80	≥ 1.0 MILLIOHM	N/A	0022	#1/0 AWG	PRESSURE HEATER GROUP 28, 55, 56-RC	
APN4104	FUSED DISCONN. SWITCH 3	X		X		BUSSMAN KTS-R80	≥ 1.0 MILLIOHM	N/A	0022	#1/0 AWG	PRESSURE HEATER GROUP 29, 57, 58-RC	
APN4104	FUSED DISCONN. SWITCH 4	X		X		BUSSMAN KTS-R80	≥ 1.0 MILLIOHM	N/A	0022	#1/0 AWG	PRESSURE HEATER GROUP 26, 53, 54-RC	
APN4104	FUSED DISCONN. SWITCH 5	X		X		BUSSMAN KTS-R80	≥ 1.0 MILLIOHM	N/A	0022	#1/0 AWG	PRESSURE HEATER GROUP 21, 47, 48-RC	
APN4104	FUSED DISCONN. SWITCH 6	X		X		BUSSMAN KTS-R80	≥ 1.0 MILLIOHM	N/A	0022	#1/0 AWG	PRESSURE HEATER GROUP 1, 2, 22-RC	
APN4104	FUSED DISCONN. SWITCH 7	X		X		BUSSMAN KTS-R80	≥ 1.0 MILLIOHM	N/A	0022	#1/0 AWG	PRESSURE HEATER GROUP 5, 6, 27-RC	
APN4104	FUSED DISCONN. SWITCH 8	X		X		BUSSMAN KTS-R80	≥ 1.0 MILLIOHM	N/A	0022	#1/0 AWG	PRESSURE HEATER GROUP 3, 4, 25-RC	
APN4104	FUSED DISCONN. SWITCH 9	X		X		BUSSMAN KTS-R80	≥ 1.0 MILLIOHM	N/A	0022	#1/0 AWG	PRESSURE HEATER GROUP 7, 8, 30-RC	
APN4104	FUSED DISCONN. SWITCH 10	X		X		BUSSMAN KTS-R80	≥ 1.0 MILLIOHM	N/A	0022	#1/0 AWG	PRESSURE HEATER GROUP 24, 51, 52-RC	
APN4105	MAIN FUSED DISCONN. SWITCH		X	X		BUSSMAN KTU-800	≥ 76 MICROHMS	N/A	0021	#1/0 AWG	PRESSURE HEATER NOS. 15-20, 38-46, 67-78-RC	
APN4105	FUSED DISCONN. SWITCH 1	X		X		BUSSMAN KTS-R80	1.0 MILLIOHM	N/A	0021	#1/0 AWG	PRESSURE HEATER GROUP 17, 18, 42-RC	
APN4105	FUSED DISCONN. SWITCH 2	X		X		BUSSMAN KTS-R80	≥ 1.0 MILLIOHM	N/A	0021	#1/0 AWG	PRESSURE HEATER GROUP 19, 20, 45-RC	
APN4105	FUSED DISCONN. SWITCH 3	X		X		BUSSMAN KTS-R80	≥ 1.0 MILLIOHM	N/A	0021	#1/0 AWG	PRESSURE HEATER GROUP 38, 67, 68-RC	
APN4105	FUSED DISCONN. SWITCH 4	X		X		BUSSMAN KTS-R80	≥ 1.0 MILLIOHM	N/A	0021	#1/0 AWG	PRESSURE HEATER GROUP 39, 69, 70-RC	
APN4105	FUSED DISCONN. SWITCH 5	X		X		BUSSMAN KTS-R80	≥ 1.0 MILLIOHM	N/A	0021	#1/0 AWG	PRESSURE HEATER GROUP 44, 75, 76-RC	
APN4105	FUSED DISCONN. SWITCH 6	X		X		BUSSMAN KTS-R80	≥ 1.0 MILLIOHM	N/A	0021	#1/0 AWG	PRESSURE HEATER GROUP 41, 71, 72-RC	
APN4105	FUSED DISCONN. SWITCH 7	X		X		BUSSMAN KTS-R80	≥ 1.0 MILLIOHM	N/A	0021	#1/0 AWG	PRESSURE HEATER GROUP 43, 73, 74-RC	
APN4105	FUSED DISCONN. SWITCH 8	X		X		BUSSMAN KTS-R80	≥ 1.0 MILLIOHM	N/A	0021	#1/0 AWG	PRESSURE HEATER GROUP 15, 16, 40-RC	
APN4105	FUSED DISCONN. SWITCH 9	X		X		BUSSMAN KTS-R80	≥ 1.0 MILLIOHM	N/A	0021	#1/0 AWG	PRESSURE HEATER GROUP 46, 77, 78-RC	
APN4106	MAIN FUSED DISCONN. SWITCH		X	X		BUSSMAN JJS 500	≥ 120 MICROHMS	N/A	0020	#1/0 AWG	PRESSURE HEATER NOS. 9-14, 31-37, 59-66-RC	
APN4106	FUSED DISCONN. SWITCH 1	X		X		BUSSMAN KTS-R80	≥ 1.0 MILLIOHM	N/A	0020	#1/0 AWG	PRESSURE HEATER GROUP 9, 10, 32-RC	
APN4106	FUSED DISCONN. SWITCH 2	X		X		BUSSMAN KTS-R80	≥ 1.0 MILLIOHM	N/A	0020	#1/0 AWG	PRESSURE HEATER GROUP 11, 12, 35-RC	
APN4106	FUSED DISCONN. SWITCH 3	X		X		BUSSMAN KTS-R80	≥ 1.0 MILLIOHM	N/A	0020	#1/0 AWG	PRESSURE HEATER GROUP 31, 59, 60-RC	
APN4106	FUSED DISCONN. SWITCH 4	X		X		BUSSMAN KTS-R80	≥ 1.0 MILLIOHM	N/A	0020	#1/0 AWG	PRESSURE HEATER GROUP 36, 65, 66-RC	
APN4106	FUSED DISCONN. SWITCH 5	X		X		BUSSMAN KTS-R80	≥ 1.0 MILLIOHM	N/A	0020	#1/0 AWG	PRESSURE HEATER GROUP 13, 14, 37-RC	
APN4106	FUSED DISCONN. SWITCH 6	X		X		BUSSMAN KTS-R80	≥ 1.0 MILLIOHM	N/A	0020	#1/0 AWG	PRESSURE HEATER GROUP 33, 61, 62-RC	
APN4106	FUSED DISCONN. SWITCH 7	X		X		BUSSMAN KTS-R80	≥ 1.0 MILLIOHM	N/A	0020	#1/0 AWG	PRESSURE HEATER GROUP 34, 63, 64-RC	

120V AND 125V DC DISTRIBUTION PNLS-CKT. BRKR.

OVERCURRENT PROTECTION DEVICE									PENETRATION		LOAD EQUIPMENT NO SYSTEM DESCRIPTION	REMARKS (OUTBOARD CKT. NO.)
LOCATION		APPLICATION		CLASS								
PARENT DEVICE NO.	UNIT NO OR TAG NO	PRI	BACK-UP	R/GE	N 3OT	TYPE	TEST SET POINT	RESPONSE TIME	NO. XRP	COND. SIZE		
APN1A2	BREAKER 2	X		X		SQUARE D QOB-115	45 AMPS	≤ 40 SEC	RB303 CONAX	#14 AWG	RB303-PS PERSONNEL AIRLOCK	PSK11X
APN1A2	BREAKER 4	X		X		SQUARE D QOB-115	45 AMPS	≤ 40 SEC	RB202 CONAX	#14 AWG	RB202-PS PERSONNEL AIRLOCK	PSK12X
APN1DA1	BREAKER 14	X			X	SQUARE D QOB-115	45 AMPS	≤ 100 SEC	0028	#12 AWG	120V CONTROL	LDK48XA
APN1FB	BREAKER 15		X	X		SQUARE D FAB-TM15A	45 AMPS	≤ 100 SEC	0033	#12 AWG	120V CONTROL	EEP78X
APN1FC1	BREAKER 2	X		X		SQUARE D FA-100/40AT	120 AMPS	≤ 100 SEC	0053	#4 AWG	XPN7068-CR/ ROD POSITION IND PANEL 1	120V AC
APN1FC1	BREAKER 4	X		X		SQUARE D FA-100/40AT	120 AMPS	≤ 100 SEC	0053	#4 AWG	XPN7061-CR/ ROD POSITION IND PANEL 2	120V AC
APN5005	BREAKER 18		X	X		GOULD EHI-B015	45 AMPS	≤ 100 SEC	0034	#12 AWG	120V CONTROL	FSK27X
APN5901	BREAKER 14		X		X	SQUARE D FA-TM15A	45 AMPS	≤ 100 SEC	0017 0028	#12 AWG	120V CONTROL	HRJ121XA HRJ47XA AHW21XA
APN5903	BREAKER 12		X		X	SQUARE D FA-TM15A	45 AMPS	≤ 100 SEC	0030	#12 AWG	120V CONTROL	AHW11XB
APN5903	BREAKER 14		X	X		SQUARE D FA-TM15A	45 AMPS	≤ 100 SEC	0030	#12 AWG	120V CONTROL	AHW31XB
APN5906	BREAKER 25	X		X		SQUARE D FA-100/20AT	60 AMPS	≤ 100 SEC	0018	#4 AWG	APN5915-EV/ TRANSFORMER POWER SUPPLY CABINET 3	120V AC
APN5907	BREAKER 32	X			X	SQUARE D FAB-TM15A	45 AMPS	≤ 100 SEC	0017	#12 AWG	120V CONTROL	RHV7A
APN5908	BREAKER 21	X			X	SQUARE D FAB-TM15A	45 AMPS	≤ 100 SEC	0038	#12 AWG	120V CONTROL	RHV14B
DPN1HX-ED	BREAKER 14	X		X		SQUARE D FH-100/ 40AT	120 AMPS	≤ 100 SEC	0053	#1/0 AWG	DPN8007C ED EMERGENCY LIGHTING PANEL 7	125V DC
DPN0H2-ED	BREAKER 20	X		X		SQUARE D FAL26015	45 AMPS	≤ 40 SEC	RB202 CONAX	#14 AWG	RB202 PS PERSONNEL AIRLOCK	PSE4X
DPN0H2-ED	BREAKER 21	X				SQUARE D FAL26015	45 AMPS	≤ 40 SEC	RB303 CONAX	#14 AWG	RB303-PS PERSONNEL AIRLOCK	PSE3X

1/4"=1'-0"
0' 5' 10' 15' 20'

NUCLEAR SAFETY RELATED

FSAR Figure 8G-4

SOUTH CAROLINA ELECTRIC & GAS COMPANY

VIRGIL C. SUMMER NUCLEAR STATION

GILBERT ASSOCIATES, INC.

ELEC. CONTAINMENT PENETRATION CONDUCTOR OVERCURRENT PROTECTION DEVICES

DESIGN ENGINEERING

A SCANA COMPANY — V. C. SUMMER NUCLEAR STATION, JENKINSVILLE, S. C.

MADE	CHECKED	LE APPROVAL
JMH	DVW	RCB

DRWG NO. SCALE: E-224-532 | 4 | 9

DRAWING NUMBER | SHT. NUMBER | REV

Amendment 02-01
May 2002

NO.	DATE	BY	REVISION	CKD. BY	LE APPROVAL
9	3/27/01	JMR	REVISED PER MRF-34428 & MRF-28965	MGR	SCS
8	09/25/98	JTS	REVISED PER NCN-97-1280	MGR	RLJ
7	10/24/97	HJM	REVISED PER MRF-22074	TWO	DAP
6	10/25/94	RHM	REVISED PER CCSS-94-1414	MGR	GJM
5	09/07/93	JMH	REVISED PER MRF-22074	JMR	WLJ
4	05/14/93	JMH	REVISED PER MRF-21644	DVW	RCB

MISCELLANEOUS PANELS – FUSES (AC)

OVERCURRENT PROTECTION DEVICE										PENETRATION		LOAD	REMARKS
LOCATION		APPLICATION		CLASS									
PARENT DEVICE NO.	UNIT NO. OR TAG NO.	PRI	BACK-UP	J	K	R	T	TYPE	TEST SET POINT	RESPONSE TIME	NO. 230P	CONDUCTOR SIZE	EQUIPMENT NO. - SYSTEM DESCRIPTION	(OUTBOARD CNT NO.)
3PM0314	7K25		X	X				BUSS MDA-15	≥4.42 MILLIAMPS	N/A	0016	#4 AWG	AFW0015-CH/ TRANSFORMER FIXED SUPPLY CABINET 3	DYY54E
TB-E21	PW8	X			X			BUSS FNA-30	≥60 MILLIAMPS	N/A	0034	#12 AWG	120V CONTROL	DEP378E
TB-E19	PW8		X	X				BUSS FNA-10	≥8 MILLIAMPS	N/A	0034	#12 AWG	120V CONTROL	DEP378E
3AA-A6	PW	X			X			GOULD 30AMPERE 8075	≥4.73 MILLIAMPS	N/A	0034	#12 AWG	120V CONTROL	F36278
3CP6270-3B	PB-HK233	X			X			BUSS MDA-6	≥70.72 MILLIAMPS	N/A	0034	#12 AWG	120V CONTROL	AAA1403
3CP6219-3B	PB-HK232	X			X			BUSS MDA-6	≥75.93 MILLIAMPS	N/A	0033	#12 AWG	120V CONTROL	AAA1503
3CP6210-3B	PB-HK233	X			X			BUSS MDA-6	≥76.92 MILLIAMPS	N/A	0033	#12 AWG	120V CONTROL	AAA1603
3CP6218-3B	PB-HK234	X			X			BUSS FNA-6%	≥73.38 MILLIAMPS	N/A	0033	#12 AWG	120V CONTROL	AAA1703
3CP6219-3B	PB-HK235	X			X			BUSS MDA-6	≥76.12 MILLIAMPS	N/A	0033	#12 AWG	120V CONTROL	AAA1803
3CP6270-3B	PB-HK236	X			X			BUSS MDA-6	≥70.12 MILLIAMPS	N/A	0033	#12 AWG	120V CONTROL	AAA1903
3CP6220-3B	PB-HK205	X			X			BUSS MDA-6	≥73.12 MILLIAMPS	N/A	0030	#12 AWG	120V CONTROL	AAA2103
3CP6320-3B	PB-HK204	X			X			GOULD 30AMPERE 8075	≥86.2 MILLIAMPS	N/A	0033	#12 AWG	120V CONTROL	AAA2012
3CP6270-3B	PB-HK205	X			X			BUSS MDA-6	≥70.12 MILLIAMPS	N/A	0035	#12 AWG	120V CONTROL	AAA2B12
3CP6210-3B	PB-HK207	X			X			BUSS MDA-6	≥70.12 MILLIAMPS	N/A	0033	#12 AWG	120V CONTROL	AAA2312
3CP6290-3B	PB-HK208	X			X			BUSS MDA-6	≥70.12 MILLIAMPS	N/A	0033	#12 AWG	120V CONTROL	AAA2312
3CP6210-3B	PB-HK095	X				X		BUSS FNA-7	≥47.7 MILLIAMPS	N/A	0029 0007	#12 AWG	120V CONTROL	HB34214 HB3121A3
3CP6270-3B	PB-HK098	X			X			BUSS FNA-3.2	≥105.8 MILLIAMPS	N/A	0029 0034	#12 AWG	120V CONTROL	JBA12565 JBA12575 FS3163

MISCELLANEOUS PANELS – FUSES (AC)

OVERCURRENT PROTECTION DEVICE										PENETRATION		LOAD	REMARKS
LOCATION		APPLICATION		CLASS									
PARENT DEVICE NO.	UNIT NO. OR TAG NO.	PRI	BACK-UP	J	K	R	T	TYPE	TEST SET POINT	RESPONSE TIME	NO. 230P	CONDUCTOR SIZE	EQUIPMENT NO. - SYSTEM DESCRIPTION	(OUTBOARD CNT NO.)
3CP7006-3C	AB/P6	X			X			LITTELFUSE 313005	≥21.67 MILLIAMPS	N/A	0031	#12 AWG	120V CONTROL	NC864 864, 8KX, 8364, 1754
3CP7063-3C	AB/P6	X			X			LITTELFUSE 313005	≥334.00 MILLIAMPS	N/A	0031	#12 AWG	120V CONTROL	NC841X
3CP7065-3C	P34		X	X				BUSS MDA-15	≥4.93 MILLIAMPS	N/A	0030	#12 AWG	120V CONTROL	NC843, 35X, 353, 8364, 1754
3CP7009-3C	PB4		X	X				BUSS MDA-15	≥5.92 MILLIAMPS	N/A	0031	#12 AWG	120V CONTROL	NC8413
3CP3000-3C	PC815	X			X			BUSS MDA-15	≥5.92 MILLIAMPS	N/A	0033	#12 AWG	120V CONTROL	NC843, 535, 873, 1373, 1772
3CP7000-3C	PC819		X	X				BUSS MDA-25	≥6.93 MILLIAMPS	N/A	0031	#12 AWG	120V CONTROL	NC871, 877, 877, 1373, 1777
3PM5001-P1	1FU	X			X			BUSS NON-G	≥19.12 MILLIAMPS	N/A	0034	#12 AWG	120V CONTROL	FHF22X
3PM5001-P1	2FU		X	X				BUSS NON-G	≥19.12 MILLIAMPS	N/A	0034	#12 AWG	120V CONTROL	FHF22X
3PM5002-P1	1FU	X			X			BUSS NON-G	≥19.12 MILLIAMPS	N/A	0034	#12 AWG	120V CONTROL	FHF21X
3PM5003-P1	2FU		X	X				BUSS NON-G	≥19.12 MILLIAMPS	N/A	0034	#12 AWG	120V CONTROL	FHF21X
3PM5254-C1	P34	X			X			GOULD SHAWMUT A2Y15-I	≥6.69 MILLIAMPS	N/A	0033	#12 AWG	120V CONTROL	E37215E
3PM5273-C1	P34		X	X				GOULD SHAWMUT A2Y60-2	≥4.34 MILLIAMPS	N/A	0033	#4 AWG	XPM2003 C1/300 POSITION 300 PSI 1	120V AC
3PM5273-C1	P32		X	X				GOULD SHAWMUT A2Y60-1	≥4.34 MILLIAMPS	N/A	0033	#4 AWG	XPM2001 C1/300 POSITION 300 PSI 2	V313 AC
3PM5571-C1	P34		X	X				GOULD SHAWMUT TRS2000	≥6.433 MILLIAMPS	N/A	0015	250 MCM	XPM0035-01 30 AMPERE CONF CONN.105 FUS 3	480V AC

MISCELLANEOUS PANELS – FUSES (AC)

OVERCURRENT PROTECTION DEVICE										PENETRATION		LOAD	REMARKS
LOCATION		APPLICATION		CLASS									
PARENT DEVICE NO.	UNIT NO. OR TAG NO.	PRI	BACK-UP	J	K	R	T	TYPE	TEST SET POINT	RESPONSE TIME	NO. 230P	CONDUCTOR SIZE	EQUIPMENT NO. - SYSTEM DESCRIPTION	(OUTBOARD CNT NO.)
3PM6477	7J01		X		X			BUSS FNA-015	≥13.40 MILLIAMPS	N/A	0017	#12 AWG	120V CONTROL	BNF7A
3PM5403	P4C		X			X		BUSS FNA-025	≥15.52 MILLIAMPS	N/A	0030	#12 AWG	120V CONTROL	BNF40
3PM6600-E6	P4C	X					X	BUSS KTN-05	≥65.80 MILLIAMPS	N/A	0054	#10 AWG	120V CONTROL	BNF72A BNF85A
3PM5580-E3	P03	X					X	BUSS KTN-03	≥34.50 MILLIAMPS	N/A	0054	#10 AWG	120V CONTROL	BNF85A
3PM5580-E6	P04	X					X	BUSS KTN-06	≥65.80 MILLIAMPS	N/A	0051	#10 AWG	120V CONTROL	BNF6433
3PM5580-E6	P021		X				X	BUSS KTN-06	≥65.80 MILLIAMPS	N/A	0051	#10 AWG	120V CONTROL	BNF72A BNF85A
3PM5580-E6	P023		X				X	BUSS KTN-06	≥69.80 MILLIAMPS	N/A	0054	#10 AWG	120V CONTROL	BNF6433
3PM5580-E6	P023		X				X	BUSS KTN-06	≥65.80 MILLIAMPS	N/A	0051	#10 AWG	120V CONTROL	BNF6333
3PM5587-E6	P03	X					X	BUSS KTN-03	≥65.80 MILLIAMPS	N/A	0048	#10 AWG	120V CONTROL	BNF6733
3PM5581-E6	P029		X	X			X	BUSS KTN-06	≥65.80 MILLIAMPS	N/A	0048	#10 AWG	120V CONTROL	BNF6733
3PM7021-2E	P00	X			X			BUSS AGC-3	≥43.30 MILLIAMPS	N/A	0035	#12 AWG	120V CONTROL	B12233A
3PM7021-2E	P013		X			X		BUSS MDA-25	≥8.92 MILLIAMPS	N/A	0030	#12 AWG	120V CONTROL	B12233A
3PM7022-3E	P04	X			X			BUSS AGC-3	≥43.30 MILLIAMPS	N/A	0029	#12 AWG	120V CONTROL	B122332
3PM7023-E6	P07		X		X			BUSS MDA-25	≥4.92 MILLIAMPS	N/A	0030	#12 AWG	120V CONTROL	B122332

NUCLEAR SAFETY RELATED

AMENDMENT 02-01
MAY 2002

DRAWING LEGIBILITY CLASS 2
SCEGO CAD ENHANCED

FSAR Figure 8G-5

SOUTH CAROLINA ELECTRIC & GAS COMPANY
VIRGIL C. SUMMER NUCLEAR STATION

ELECTRICAL
CONTAINMENT PENETRATION CONDUCTOR OVERCURRENT PROTECTION DEVICES
DESIGN ENGINEERING

NO.	DATE	BY	REVISION	DSN	DWN	CHK
3	2/2/01	JMR	REVISED PER NCR-00084	MGR	BCS	
4	2/2/01	TGB	REVISED PER ECR-00084	MGR	RAT	

TGB | MGR | RAT

E-224-532 | 5 | 5

RN 01-064

1/4"= 1'-0" (0 5' 10' 15' 20')

...\ondeck\2467\224532_0005.dgn Apr. 12, 2001 09:50:37

G:\Working\OnDeck\3737\224532_0006.dgn
jr14325 08-MAR-2007 10:07

14 13 12 11 10 9 8 7 6 5 4 3 2 1

MISCELLANEOUS PANELS - FUSES (AC)

OVERCURRENT PROTECTION DEVICE									PENETRATION		LOAD	
LOCATION		APPLICATION		CLASS								
PARENT DEVICE NO.	UNIT NO. OR TAG NO.	PRI	BACK-UP			TYPE	TEST SET POINT	RESPONSE TIME	NO. XRP	CONDUCTOR SIZE	EQUIPMENT NO. - SYSTEM DESCRIPTION	REMARKS (OUTBOARD CKT NO.)
XPN7174-AN	FU1		X	X		BUSS FRN-R15	≥15.02 MILLIOHMS	N/A	0034	#12 AWG	120V CONTROL	ANJ141X
XSW1A2-ES	FU1		X	X		GOULD SHAWMUT A2Y15-1	≥8.81 MILLIOHMS	N/A	XX303 COAX	#14 AWG	XX303-PS PERSONNEL AIRLOCK	PSX11X
XSW1A2-ES	FU2		X	X		GOULD SHAWMUT A2Y15-1	≥8.81 MILLIOHMS	N/A	XX202 COAX	#14 AWG	XX202-PS PERSONNEL AIRLOCK	PSX12X
XSW10A1-ES	FU4		X		X	BUSS FRN-R15	≥15.02 MILLIOHMS	N/A	0028	#12 AWG	120V CONTROL	LNX48XA

MISCELLANEOUS PANELS - FUSES (DC)

OVERCURRENT PROTECTION DEVICE									PENETRATION		LOAD	
LOCATION		APPLICATION		CLASS								
PARENT DEVICE NO.	UNIT NO. OR TAG NO.	PRI	BACK-UP			TYPE	TEST SET POINT	RESPONSE TIME	NO. XRP	CONDUCTOR SIZE	EQUIPMENT NO. - SYSTEM DESCRIPTION	REMARKS
XCA1A-CR	A51-FU1	X		X		GOULD SHAWMUT A25X50-4	≥1.71 MILLIOHMS	N/A	0023	#1/0 AWG	CONTROL BANK A GROUP 1 MECHANISM 1	CRDM-F2 125V DC
XCA1A-CR	A51-FU2	X		X		GOULD SHAWMUT A25X50-4	≥1.71 MILLIOHMS	N/A	0023	#1/0 AWG	CONTROL BANK A GROUP 1 MECHANISM 2	CRDM-B10 125V DC
XCA1A-CR	A52-FU1	X		X		GOULD SHAWMUT A25X50-4	≥1.71 MILLIOHMS	N/A	0023	#1/0 AWG	CONTROL BANK A GROUP 1 MECHANISM 3	CRDM-K14 125V DC
XCA1A-CR	A52-FU2	X		X		GOULD SHAWMUT A25X50-4	≥1.71 MILLIOHMS	N/A	0023	#1/0 AWG	CONTROL BANK A GROUP 1 MECHANISM 4	CRDM-P8 125V DC
XCA1A-CR	A53-FU1	X		X		GOULD SHAWMUT A25X50-4	≥1.71 MILLIOHMS	N/A	0023	#1/0 AWG	CONTROL BANK C GROUP 1 MECHANISM 1	CRDM-D4 125V DC
XCA1A-CR	A53-FU2	X		X		GOULD SHAWMUT A25X50-4	≥1.71 MILLIOHMS	N/A	0023	#1/0 AWG	CONTROL BANK C GROUP 1 MECHANISM 2	CRDM-D12 125V DC
XCA1A-CR	A54-FU1	X		X		GOULD SHAWMUT A25X50-4	≥1.71 MILLIOHMS	N/A	0023	#1/0 AWG	CONTROL BANK C GROUP 1 MECHANISM 3	CRDM-M12 125V DC
XCA1A-CR	A54-FU2	X		X		GOULD SHAWMUT A25X50-4	≥1.71 MILLIOHMS	N/A	0024	#1/0 AWG	CONTROL BANK C GROUP 1 MECHANISM 4	CRDM-M4 125V DC
XCA1A-CR	A55-FU1	X		X		GOULD SHAWMUT A25X50-4	≥1.71 MILLIOHMS	N/A	0024	#1/0 AWG	SHUTDOWN BANK A GROUP 1 MECHANISM 1	CRDM-G3 125V DC
XCA1A-CR	A55-FU2	X		X		GOULD SHAWMUT A25X50-4	≥1.71 MILLIOHMS	N/A	0024	#1/0 AWG	SHUTDOWN BANK A GROUP 1 MECHANISM 2	CRDM-C9 125V DC
XCA1A-CR	A56-FU1	X		X		GOULD SHAWMUT A25X50-4	≥1.71 MILLIOHMS	N/A	0024	#1/0 AWG	SHUTDOWN BANK A GROUP 1 MECHANISM 3	CRDM-J13 125V DC
XCA1A-CR	A56-FU2	X		X		GOULD SHAWMUT A25X50-4	≥1.71 MILLIOHMS	N/A	0024	#1/0 AWG	SHUTDOWN BANK A GROUP 1 MECHANISM 4	CRDM-H7 125V DC
XCA1A-CR	A57-FU1		X	X		GOULD SHAWMUT A25X50-4	≥1.71 MILLIOHMS	N/A	0023 0024	#1/0 AWG	SHUTDOWN BANK A CONTROL BANK A,C GROUP 1 MECHANISM 1	CRDM-F2,D4,G3 125V DC
XCA1A-CR	A57-FU2		X	X		GOULD SHAWMUT A25X50-4	≥1.71 MILLIOHMS	N/A	0023 0024	#1/0 AWG	CONTROL BANK A,C SHUTDOWN BANK A GROUP 1 MECHANISM 2	CRDM-C9,B10,D12 125V DC
XCA1A-CR	A58-FU1		X	X		GOULD SHAWMUT A25X50-4	≥1.71 MILLIOHMS	N/A	0023 0024	#1/0 AWG	CONTROL BANK A,C SHUTDOWN BANK A GROUP 1 MECHANISM 3	CRDM-K14,J13,M12 125V DC
XCA1A-CR	A58-FU2		X	X		GOULD SHAWMUT A25X50-4	≥1.71 MILLIOHMS	N/A	0023 0024	#1/0 AWG	CONTROL BANK A,C SHUTDOWN BANK A GROUP 1 MECHANISM 4	CRDM-P8,M4,H7 125V DC
XCA1A-CR	A59-FU13	X		X		BUSS P/N BB1429	≥37.5 MILLIOHMS	N/A	0023	#1/0 AWG	CONTROL BANK A GROUP 1 MECHANISM 1	CRDM-F2 125V DC
XCA1A-CR	A59-FU14	X		X		BUSS P/N BB1429	≥37.5 MILLIOHMS	N/A	0023	#1/0 AWG	CONTROL BANK A GROUP 1 MECHANISM 2	CRDM-B10 125V DC
XCA1A-CR	A59-FU15	X		X		BUSS P/N BB1429	≥37.5 MILLIOHMS	N/A	0023	#1/0 AWG	CONTROL BANK A GROUP 1 MECHANISM 3	CRDM-K14 125V DC
XCA1A-CR	A59-FU16	X		X		BUSS P/N BB1429	≥37.5 MILLIOHMS	N/A	0023	#1/0 AWG	CONTROL BANK A GROUP 1 MECHANISM 4	CRDM-P8 125V DC
XCA1A-CR	A59-FU17		X	X		BUSS P/N BB1429	≥37.5 MILLIOHMS	N/A	0023	#1/0 AWG	CONTROL BANK A GROUP 1 MECHANISM 1	CRDM-F2 125V DC
XCA1A-CR	A59-FU18		X	X		BUSS P/N BB1429	≥37.5 MILLIOHMS	N/A	0023	#1/0 AWG	CONTROL BANK A GROUP 1 MECHANISM 2	CRDM-B10 125V DC
XCA1A-CR	A59-FU19		X	X		BUSS P/N BB1429	≥37.5 MILLIOHMS	N/A	0023	#1/0 AWG	CONTROL BANK A GROUP 1 MECHANISM 3	CRDM-K14 125V DC
XCA1A-CR	A59-FU20		X	X		BUSS P/N BB1429	≥37.5 MILLIOHMS	N/A	0023	#1/0 AWG	CONTROL BANK A GROUP 1 MECHANISM 4	CRDM-P8 125V DC
XCA1A-CR	A59-FU21	X		X		BUSS P/N BB1429	≥37.5 MILLIOHMS	N/A	0023	#1/0 AWG	CONTROL BANK A GROUP 1 MECHANISM 1	CRDM-F2 125V DC
XCA1A-CR	A59-FU22	X		X		BUSS P/N BB1429	≥37.5 MILLIOHMS	N/A	0023	#1/0 AWG	CONTROL BANK A GROUP 1 MECHANISM 2	CRDM-B10 125V DC
XCA1A-CR	A59-FU23	X		X		BUSS P/N BB1429	≥37.5 MILLIOHMS	N/A	0023	#1/0 AWG	CONTROL BANK A GROUP 1 MECHANISM 3	CRDM-K14 125V DC
XCA1A-CR	A59-FU24	X		X		BUSS P/N BB1429	≥37.5 MILLIOHMS	N/A	0023	#1/0 AWG	CONTROL BANK A GROUP 1 MECHANISM 4	CRDM-P8 125V DC
XCA1A-CR	A60-FU25	X		X		BUSS P/N BB1429	≥37.5 MILLIOHMS	N/A	0023	#1/0 AWG	CONTROL BANK C GROUP 1 MECHANISM 1	CRDM-D4 125V DC
XCA1A-CR	A60-FU26	X		X		BUSS P/N BB1429	≥37.5 MILLIOHMS	N/A	0022	#1/0 AWG	CONTROL BANK C GROUP 1 MECHANISM 2	CRDM-D12 125V DC
XCA1A-CR	A60-FU27	X		X		BUSS P/N BB1429	≥37.5 MILLIOHMS	N/A	0023	#1/0 AWG	CONTROL BANK C GROUP 1 MECHANISM 3	CRDM-M12 125V DC
XCA1A-CR	A60-FU28	X		X		BUSS P/N BB1429	≥37.5 MILLIOHMS	N/A	0024	#1/0 AWG	CONTROL BANK C GROUP 1 MECHANISM 4	CRDM-M4 125V DC
XCA1A-CR	A60-FU29		X	X		BUSS P/N BB1429	≥37.5 MILLIOHMS	N/A	0023	#1/0 AWG	CONTROL BANK C GROUP 1 MECHANISM 1	CRDM-D4 125V DC
XCA1A-CR	A60-FU30		X	X		BUSS P/N BB1429	≥37.5 MILLIOHMS	N/A	0023	#1/0 AWG	CONTROL BANK C GROUP 1 MECHANISM 2	CRDM-D12 125V DC
XCA1A-CR	A60-FU31		X	X		BUSS P/N BB1429	≥37.5 MILLIOHMS	N/A	0023	#1/0 AWG	CONTROL BANK C GROUP 1 MECHANISM 3	CRDM-M12 125V DC
XCA1A-CR	A60-FU32		X	X		BUSS P/N BB1429	≥37.5 MILLIOHMS	N/A	0024	#1/0 AWG	CONTROL BANK C GROUP 1 MECHANISM 4	CRDM-M4 125V DC

MISCELLANEOUS PANELS - FUSES (DC)

OVERCURRENT PROTECTION DEVICE									PENETRATION		LOAD	
LOCATION		APPLICATION		CLASS								
PARENT DEVICE NO.	UNIT NO. OR TAG NO.	PRI	BACK-UP			TYPE	TEST SET POINT	RESPONSE TIME	NO. XRP	CONDUCTOR SIZE	EQUIPMENT NO. - SYSTEM DESCRIPTION	REMARKS
XCA1A-CR	A60-FU33	X		X		BUSS P/N BB1429	≥37.5 MILLIOHMS	N/A	0023	#1/0 AWG	CONTROL BANK C GROUP 1 MECHANISM 1	CRDM-D4 125V DC
XCA1A-CR	A60-FU34	X		X		BUSS P/N BB1429	≥37.5 MILLIOHMS	N/A	0023	#1/0 AWG	CONTROL BANK C GROUP 1 MECHANISM 2	CRDM-D12 125V DC
XCA1A-CR	A60-FU35	X		X		BUSS P/N BB1429	≥37.5 MILLIOHMS	N/A	0023	#1/0 AWG	CONTROL BANK C GROUP 1 MECHANISM 3	CRDM-M12 125V DC
XCA1A-CR	A60-FU36	X		X		BUSS P/N BB1429	≥37.5 MILLIOHMS	N/A	0024	#1/0 AWG	CONTROL BANK C GROUP 1 MECHANISM 4	CRDM-M4 125V DC
XCA1A-CR	A60-FU37		X	X		BUSS P/N BB1429	≥37.5 MILLIOHMS	N/A	0024	#1/0 AWG	SHUTDOWN BANK A GROUP 1 MECHANISM 1	CRDM-G3 125V DC
XCA1A-CR	A60-FU38		X	X		BUSS P/N BB1429	≥37.5 MILLIOHMS	N/A	0024	#1/0 AWG	SHUTDOWN BANK A GROUP 1 MECHANISM 2	CRDM-C9 125V DC
XCA1A-CR	A60-FU39		X	X		BUSS P/N BB1429	≥37.5 MILLIOHMS	N/A	0024	#1/0 AWG	SHUTDOWN BANK A GROUP 1 MECHANISM 3	CRDM-J13 125V DC
XCA1A-CR	A60-FU40		X	X		BUSS P/N BB1429	≥37.5 MILLIOHMS	N/A	0024	#1/0 AWG	SHUTDOWN BANK A GROUP 1 MECHANISM 4	CRDM-H7 125V DC
XCA1A-CR	A61-FU41	X		X		BUSS P/N BB1429	≥37.5 MILLIOHMS	N/A	0024	#1/0 AWG	SHUTDOWN BANK A GROUP 1 MECHANISM 1	CRDM-G3 125V DC
XCA1A-CR	A61-FU42	X		X		BUSS P/N BB1429	≥37.5 MILLIOHMS	N/A	0024	#1/0 AWG	SHUTDOWN BANK A GROUP 1 MECHANISM 2	CRDM-C9 125V DC
XCA1A-CR	A61-FU43	X		X		BUSS P/N BB1429	≥37.5 MILLIOHMS	N/A	0024	#1/0 AWG	SHUTDOWN BANK A GROUP 1 MECHANISM 3	CRDM-J13 125V DC
XCA1A-CR	A61-FU44	X		X		BUSS P/N BB1429	≥37.5 MILLIOHMS	N/A	0024	#1/0 AWG	SHUTDOWN BANK A GROUP 1 MECHANISM 4	CRDM-H7 125V DC
XCA1A-CR	A61-FU45		X	X		BUSS P/N BB1429	≥37.5 MILLIOHMS	N/A	0023 0024	#1/0 AWG	CONTROL BANK A,C SHUTDOWN BANK A GROUP 1 MECHANISM 1	CRDM-D4,F2,G3 125V DC
XCA1A-CR	A61-FU46		X	X		BUSS P/N BB1429	≥37.5 MILLIOHMS	N/A	0023 0024	#1/0 AWG	CONTROL BANK A,C SHUTDOWN BANK A GROUP 1 MECHANISM 2	CRDM-B10,D12,C9 125V DC
XCA1A-CR	A61-FU47		X	X		BUSS P/N BB1429	≥37.5 MILLIOHMS	N/A	0023 0024	#1/0 AWG	CONTROL BANK A,C SHUTDOWN BANK A GROUP 1 MECHANISM 3	CRDM-M12,K14,J13 125V DC
XCA1A-CR	A61-FU48		X	X		BUSS P/N BB1429	≥37.5 MILLIOHMS	N/A	0023 0024	#1/0 AWG	CONTROL BANK A,C SHUTDOWN BANK A GROUP 1 MECHANISM 4	CRDM-M4,P8,H7 125V DC
XCA1A-CR	A61-FU49	X		X		BUSS P/N BB1429	≥37.5 MILLIOHMS	N/A	0024	#1/0 AWG	SHUTDOWN BANK A GROUP 1 MECHANISM 1	CRDM-G3 125V DC
XCA1A-CR	A61-FU50	X		X		BUSS P/N BB1429	≥37.5 MILLIOHMS	N/A	0024	#1/0 AWG	SHUTDOWN BANK A GROUP 1 MECHANISM 2	CRDM-C9 125V DC
XCA1A-CR	A61-FU51	X		X		BUSS P/N BB1429	≥37.5 MILLIOHMS	N/A	0024	#1/0 AWG	SHUTDOWN BANK A GROUP 1 MECHANISM 3	CRDM-J15 125V DC
XCA1A-CR	A61-FU52	X		X		BUSS P/N BB1429	≥37.5 MILLIOHMS	N/A	0024	#1/0 AWG	SHUTDOWN BANK A GROUP 1 MECHANISM 4	CRDM-H7 125V DC
XCA1B-CR	A51-FU1	X		X		GOULD SHAWMUT A25X50-4	≥1.71 MILLIOHMS	N/A	0026	#1/0 AWG	CONTROL BANK B GROUP 1 MECHANISM 1	CRDM-F6 125V DC
XCA1B-CR	A51-FU2	X		X		GOULD SHAWMUT A25X50-4	≥1.71 MILLIOHMS	N/A	0026	#1/0 AWG	CONTROL BANK B GROUP 1 MECHANISM 2	CRDM-B10 125V DC
XCA1B-CR	A52-FU1	X		X		GOULD SHAWMUT A25X50-4	≥1.71 MILLIOHMS	N/A	0026	#1/0 AWG	CONTROL BANK B GROUP 1 MECHANISM 3	CRDM-K12 125V DC
XCA1B-CR	A52-FU2	X		X		GOULD SHAWMUT A25X50-4	≥1.71 MILLIOHMS	N/A	0026	#1/0 AWG	CONTROL BANK B GROUP 1 MECHANISM 4	CRDM-[illegible] 125V DC
XCA1B-CR	A53-FU1	X		X		GOULD SHAWMUT A25X50-4	≥1.71 MILLIOHMS	N/A	0054	#1/0 AWG	CONTROL BANK B GROUP 1 MECHANISM 1	CRDM-K2 125V DC
XCA1B-CR	A53-FU2	X		X		GOULD SHAWMUT A25X50-4	≥1.71 MILLIOHMS	N/A	0054	#1/0 AWG	CONTROL BANK B GROUP 1 MECHANISM 2	CRDM-[illegible] 125V DC
XCA1B-CR	A54-FU1	X		X		GOULD SHAWMUT A25X50-4	≥1.71 MILLIOHMS	N/A	0054	#1/0 AWG	CONTROL BANK B GROUP 1 MECHANISM 3	CRDM-H14 125V DC
XCA1B-CR	A54-FU2	X		X		GOULD SHAWMUT A25X50-4	≥1.71 MILLIOHMS	N/A	0054	#1/0 AWG	CONTROL BANK B GROUP 1 MECHANISM 4	CRDM-P9 125V DC
XCA1B-CR	A55-FU1	X		X		GOULD SHAWMUT A25X50-4	≥1.71 MILLIOHMS	N/A	0054	#1/0 AWG	SHUTDOWN BANK B GROUP 1 MECHANISM 1	CRDM-E5 125V DC
XCA1B-CR	A55-FU2	X		X		GOULD SHAWMUT A25X50-4	≥1.71 MILLIOHMS	N/A	0054	#1/0 AWG	SHUTDOWN BANK B GROUP 1 MECHANISM 2	CRDM-E11 125V DC

1/4"=1'-0" 0' 5' 10' 15' 20'

RN 07-006

NUCLEAR SAFETY RELATED

NO.	DATE	BY	REVISION	CKD. BY	LE APPROVAL
5	3/5/07	JMR	REVISED PER ECR-50625	MGR	TOC
4	3/28/01	JMR	REVISED PER MRF-34428	MGR	SCS

FSAR Figure 8G-6

SOUTH CAROLINA ELECTRIC & GAS COMPANY

VIRGIL C. SUMMER NUCLEAR STATION

ELECTRICAL
CONTAINMENT PENETRATION CONDUCTOR
OVERCURRENT PROTECTION DEVICES

DESIGN ENGINEERING
SCANA A SCANA COMPANY — V. C. SUMMER NUCLEAR STATION JENKINSVILLE, S. C.

MADE	CHECKED	LE APPROVAL
1. JMR	2. MGR	3. SCS

SCALE	DRAWING NUMBER	SHT. NUMBER	REV
NO SCALE	E-224-532	6	5

MISCELLANEOUS PANELS – FUSES (DC)

OVERCURRENT PROTECTION DEVICE									PENETRATION		LOAD EQUIPMENT NO – SYSTEM DESCRIPTION	REMARKS
LOCATION		APPLICATION		CLASS		TYPE	TEST SET POINT	RESPONSE TIME	NO XRP	CONDUCTOR SIZE		
PARENT DEVICE NO	UNIT NO OR TAG NO.	PRI	BACK-UP	1E	NON 1E							
XCA1B-CR	A56-FU1	X			X	GOULD SHAWMUT A25X50-4	≥ 1.71 MILLIOHMS	N/A	0054	#1/0 AWG	SHUTDOWN BANK B GROUP 1 MECHANISM 3	CRDW-L11 125V DC
XCA1B-CR	A56-FU2	X			X	GOULD SHAWMUT A25X50-4	≥ 1.71 MILLIOHMS	N/A	0055	#1/0 AWG	SHUTDOWN BANK B GROUP 1 MECHANISM 4	CRDW-L5 125V DC
XCA1B-CR	A57-FU1		X	X		GOULD SHAWMUT A25X50-4	≥ 1.71 MILLIOHMS	N/A	0054 0028	#1/0 AWG	CONTROL BANK D,B SHUTDOWN BANK B GROUP 1 MECHANISM 1	CRDW-H2, F4, E5
XCA1B-CR	A57-FU2		X	X		GOULD SHAWMUT A25X50-4	≥ 1.71 MILLIOHMS	N/A	0026 0054	#1/0 AWG	CONTROL BANK D,B SHUTDOWN BANK B GROUP 1 MECHANISM 2	CRDW-B8, E11, D10 125V DC
XCA1B-CR	A58-FU1		X	X		GOULD SHAWMUT A25X50-4	≥ 1.71 MILLIOHMS	N/A	0054 0026	#1/0 AWG	CONTROL BANK D,B SHUTDOWN BANK B GROUP 1 MECHANISM 3	CRDW-H14,L11,K12 125V DC
XCA1B-CR	A58-FU2		X	X		GOULD SHAWMUT A25X50-4	≥ 1.71 MILLIOHMS	N/A	0026 0054 0055	#1/0 AWG	CONTROL BANK D,B SHUTDOWN BANK B GROUP 1 MECHANISM 4	CRDW-P8, H6, L5 125V DC
XCA1B-CR	A59-FU13	X		X		BUSS P/N (BB1425)	≥ 37.5 MILLIOHMS	N/A	0026	#1/0 AWG	CONTROL BANK B GROUP 1 MECHANISM 1	CRDW-F4 125V DC
XCA1B-CR	A59-FU14	X		X		BUSS P/N (BB1425)	≥ 37.5 MILLIOHMS	N/A	0026	#1/0 AWG	CONTROL BANK B GROUP 1 MECHANISM 2	CRDW-D10 125V DC
XCA1B-CR	A59-FU15	X		X		BUSS P/N (BB1425)	≥ 37.5 MILLIOHMS	N/A	0026	#1/0 AWG	CONTROL BANK B GROUP 1 MECHANISM 3	CRDW-K12 125V DC
XCA1B-CR	A59-FU16	X		X		BUSS P/N (BB1425)	≥ 37.5 MILLIOHMS	N/A	0026	#1/0 AWG	CONTROL BANK B GROUP 1 MECHANISM 4	CRDW-H6 125V DC
XCA1B-CR	A59-FU17		X	X		BUSS P/N (BB1425)	≥ 37.5 MILLIOHMS	N/A	0026	#1/0 AWG	CONTROL BANK B GROUP 1 MECHANISM 1	CRDW-F4 125V DC
XCA1B-CR	A59-FU18		X	X		BUSS P/N (BB1425)	≥ 37.5 MILLIOHMS	N/A	0026	#1/0 AWG	CONTROL BANK B GROUP 1 MECHANISM 2	CRDW-D10 125V DC
XCA1B-CR	A59-FU19		X	X		BUSS P/N (BB1425)	≥ 37.5 MILLIOHMS	N/A	0026	#1/0 AWG	CONTROL BANK B GROUP 1 MECHANISM 3	CRDW-K12 125V DC
XCA1B-CR	A59-FU20		X	X		BUSS P/N (BB1425)	≥ 37.5 MILLIOHMS	N/A	0026	#1/0 AWG	CONTROL BANK B GROUP 1 MECHANISM 4	CRDW-H6 125V DC
XCA1B-CR	A59-FU21	X		X		BUSS P/N (BB1425)	≥ 37.5 MILLIOHMS	N/A	0026	#1/0 AWG	CONTROL BANK B GROUP 1 MECHANISM 1	CRDW-F4 125V DC
XCA1B-CR	A59-FU22	X		X		BUSS P/N (BB1425)	≥ 37.5 MILLIOHMS	N/A	0026	#1/0 AWG	CONTROL BANK B GROUP 1 MECHANISM 2	CRDW-D10 125V DC
XCA1B-CR	A59-FU23	X		X		BUSS P/N (BB1425)	≥ 37.5 MILLIOHMS	N/A	0026	#1/0 AWG	CONTROL BANK B GROUP 1 MECHANISM 3	CRDW-K12 125V DC
XCA1B-CR	A59-FU24	X		X		BUSS P/N (BB1425)	≥ 37.5 MILLIOHMS	N/A	0026	#1/0 AWG	CONTROL BANK B GROUP 1 MECHANISM 4	CRDW-H6 125V DC
XCA1B-CR	A60-FU25	X		X		BUSS P/N (BB1425)	≥ 37.5 MILLIOHMS	N/A	0054	#1/0 AWG	CONTROL BANK D GROUP 1 MECHANISM 1	CRDW-H2 125V DC
XCA1B-CR	A60-FU26	X		X		BUSS P/N (BB1425)	≥ 37.5 MILLIOHMS	N/A	0054	#1/0 AWG	CONTROL BANK D GROUP 1 MECHANISM 2	CRDW-B8 125V DC
XCA1B-CR	A60-FU27	X		X		BUSS P/N (BB1425)	≥ 37.5 MILLIOHMS	N/A	0054	#1/0 AWG	CONTROL BANK D GROUP 1 MECHANISM 3	CRDW-H14 125V DC
XCA1B-CR	A60-FU28	X		X		BUSS P/N (BB1425)	≥ 37.5 MILLIOHMS	N/A	0054	#1/0 AWG	CONTROL BANK D GROUP 1 MECHANISM 4	CRDW-P8 125V DC
XCA1B-CR	A60-FU29		X	X		BUSS P/N (BB1425)	≥ 37.5 MILLIOHMS	N/A	0054	#1/0 AWG	CONTROL BANK D GROUP 1 MECHANISM 1	CRDW-H2 125V DC
XCA1B-CR	A60-FU30		X	X		BUSS P/N (BB1425)	≥ 37.5 MILLIOHMS	N/A	0054	#1/0 AWG	CONTROL BANK D GROUP 1 MECHANISM 2	CRDW-B8 125V DC
XCA1B-CR	A60-FU31		X	X		BUSS P/N (BB1425)	≥ 37.5 MILLIOHMS	N/A	0054	#1/0 AWG	CONTROL BANK D GROUP 1 MECHANISM 3	CRDW-H14 125V DC
XCA1B-CR	A60-FU32		X	X		BUSS P/N (BB1425)	≥ 37.5 MILLIOHMS	N/A	0054	#1/0 AWG	CONTROL BANK D GROUP 1 MECHANISM 4	CRDW-P8 125V DC
XCA1B-CR	A60-FU33	X		X		BUSS P/N (BB1425)	≥ 37.5 MILLIOHMS	N/A	0054	#1/0 AWG	CONTROL BANK D GROUP 1 MECHANISM 1	CRDW-H2 125V DC
XCA1B-CR	A60-FU34	X		X		BUSS P/N (BB1425)	≥ 37.5 MILLIOHMS	N/A	0054	#1/0 AWG	CONTROL BANK D GROUP 1 MECHANISM 2	CRDW-B8 125V DC
XCA1B-CR	A60-FU35	X		X		BUSS P/N (BB1425)	≥ 37.5 MILLIOHMS	N/A	0054	#1/0 AWG	CONTROL BANK D GROUP 1 MECHANISM 3	CRDW-H14 125V DC
XCA1B-CR	A60-FU36	X		X		BUSS P/N (BB1425)	≥ 37.5 MILLIOHMS	N/A	0054	#1/0 AWG	CONTROL BANK D GROUP 1 MECHANISM 4	CRDW-P8 125V DC
XCA1B-CR	A60-FU37		X	X		BUSS P/N (BB1425)	≥ 37.5 MILLIOHMS	N/A	0054	#1/0 AWG	SHUTDOWN BANK B GROUP 1 MECHANISM 1	CRDW-E5 125V DC
XCA1B-CR	A60-FU38		X	X		BUSS P/N (BB1425)	≥ 37.5 MILLIOHMS	N/A	0054	#1/0 AWG	SHUTDOWN BANK B GROUP 1 MECHANISM 2	CRDW-E11 125V DC
XCA1B-CR	A60-FU39		X	X		BUSS P/N (BB1425)	≥ 37.5 MILLIOHMS	N/A	0054	#1/0 AWG	SHUTDOWN BANK B GROUP 1 MECHANISM 3	CRDW-L11 125V DC
XCA1B-CR	A60-FU40		X	X		BUSS P/N (BB1425)	≥ 37.5 MILLIOHMS	N/A	0055	#1/0 AWG	SHUTDOWN BANK B GROUP 1 MECHANISM 4	CRDW-L5 125V DC
XCA1B-CR	A61-FU41	X			X	BUSS P/N (BB1425)	≥ 37.5 MILLIOHMS	N/A	0054	#1/0 AWG	SHUTDOWN BANK B GROUP 1 MECHANISM 1	CRDW-E5 125V DC

MISCELLANEOUS PANELS – FUSES (DC)

OVERCURRENT PROTECTION DEVICE									PENETRATION		LOAD EQUIPMENT NO. – SYSTEM DESCRIPTION	REMARKS
LOCATION		APPLICATION		CLASS		TYPE	TEST SET POINT	RESPONSE TIME	NO XRP	CONDUCTOR SIZE		
PARENT DEVICE NO	UNIT NO OR TAG NO.	PRI	BACK-UP	1E	NON 1E							
XCA1B-CR	A61-FU42	X			X	BUSS P/N (BB1425)	≥ 37.5 MILLIOHMS	N/A	0054	#1/0 AWG	SHUTDOWN BANK B GROUP 1 MECHANISM 2	CRDW-E11 125V DC
XCA1B-CR	A61-FU43	X			X	BUSS P/N (BB1425)	≥ 37.5 MILLIOHMS	N/A	0054	#1/0 AWG	SHUTDOWN BANK B GROUP 1 MECHANISM 3	CRDW-L11 125V DC
XCA1B-CR	A61-FU44	X			X	BUSS P/N (BB1425)	≥ 37.5 MILLIOHMS	N/A	0055	#1/0 AWG	SHUTDOWN BANK B GROUP 1 MECHANISM 4	CRDW-L5 125V DC
XCA1B-CR	A61-FU45		X	X		BUSS P/N (BB1425)	≥ 37.5 MILLIOHMS	N/A	0054 0026	#1/0 AWG	SHUTDOWN BANK B CONTROL BANK D,B GROUP 1 MECHANISM 1	CRDW-E5, H2, F4 125V DC
XCA1B-CR	A61-FU46		X	X		BUSS P/N (BB1425)	≥ 37.5 MILLIOHMS	N/A	0054 0026	#1/0 AWG	SHUTDOWN BANK B CONTROL BANK D,B GROUP 1 MECHANISM 2	CRDW-E11, B8, D10 125V DC
XCA1B-CR	A61-FU47		X	X		BUSS P/N (BB1425)	≥ 37.5 MILLIOHMS	N/A	0054 0026	#1/0 AWG	SHUTDOWN BANK B CONTROL BANK D,B GROUP 1 MECHANISM 3	CRDW-L11,H14,K12 125V DC
XCA1B-CR	A61-FU48		X	X		BUSS P/N (BB1425)	≥ 37.5 MILLIOHMS	N/A	0026 0054 0055	#1/0 AWG	SHUTDOWN BANK B CONTROL BANK D,B GROUP 1 MECHANISM 4	CRDW-L5, P8, H6 125V DC
XCA1B-CR	A61-FU49	X		X		BUSS P/N (BB1425)	≥ 37.5 MILLIOHMS	N/A	0054	#1/0 AWG	SHUTDOWN BANK B GROUP 1 MECHANISM 1	CRDW-E5 125V DC
XCA1B-CR	A61-FU50	X		X		BUSS P/N (BB1425)	≥ 37.5 MILLIOHMS	N/A	0054	#1/0 AWG	SHUTDOWN BANK B GROUP 1 MECHANISM 2	CRDW-E11 125V DC
XCA1B-CR	A61-FU51	X		X		BUSS P/N (BB1425)	≥ 37.5 MILLIOHMS	N/A	0054	#1/0 AWG	SHUTDOWN BANK B GROUP 1 MECHANISM 3	CRDW-L11 125V DC
XCA1B-CR	A61-FU52	X		X		BUSS P/N (BB1425)	≥ 37.5 MILLIOHMS	N/A	0055	#1/0 AWG	SHUTDOWN BANK B GROUP 1 MECHANISM 4	CRDW-L5 125V DC
XCA2A-CR	A51-FU1	X		X		GOULD SHAWMUT A25X50-4	≥ 1.71 MILLIOHMS	N/A	0024	#1/0 AWG	CONTROL BANK A GROUP 2 MECHANISM 1	CRDW-B6 125V DC
XCA2A-CR	A51-FU2	X		X		GOULD SHAWMUT A25X50-4	≥ 1.71 MILLIOHMS	N/A	0024	#1/0 AWG	CONTROL BANK A GROUP 2 MECHANISM 2	CRDW-F14 125V DC
XCA2A-CR	A52-FU1	X		X		GOULD SHAWMUT A25X50-4	≥ 1.71 MILLIOHMS	N/A	0025	#1/0 AWG	CONTROL BANK A GROUP 2 MECHANISM 3	CRDW-P10 125V DC
XCA2A-CR	A52-FU2	X		X		GOULD SHAWMUT A25X50-4	≥ 1.71 MILLIOHMS	N/A	0025	#1/0 AWG	CONTROL BANK A GROUP 2 MECHANISM 4	CRDW-K2 125V DC
XCA2A-CR	A53-FU1	X		X		GOULD SHAWMUT A25X50-4	≥ 1.71 MILLIOHMS	N/A	0025	#1/0 AWG	CONTROL BANK C GROUP 2 MECHANISM 1	CRDW-H6 125V DC
XCA2A-CR	A53-FU2	X		X		GOULD SHAWMUT A25X50-4	≥ 1.71 MILLIOHMS	N/A	0025	#1/0 AWG	CONTROL BANK C GROUP 2 MECHANISM 2	CRDW-F8 125V DC
XCA2A-CR	A54-FU1	X		X		GOULD SHAWMUT A25X50-4	≥ 1.71 MILLIOHMS	N/A	0025	#1/0 AWG	CONTROL BANK C GROUP 2 MECHANISM 3	CRDW-H10 125V DC
XCA2A-CR	A54-FU2	X		X		GOULD SHAWMUT A25X50-4	≥ 1.71 MILLIOHMS	N/A	0025	#1/0 AWG	CONTROL BANK C GROUP 2 MECHANISM 4	CRDW-K8 125V DC
XCA2A-CR	A55-FU1	X		X		GOULD SHAWMUT A25X50-4	≥ 1.71 MILLIOHMS	N/A	0025	#1/0 AWG	SHUTDOWN BANK A GROUP 2 MECHANISM 1	CRDW-C7 125V DC
XCA2A-CR	A55-FU2	X		X		GOULD SHAWMUT A25X50-4	≥ 1.71 MILLIOHMS	N/A	0026	#1/0 AWG	SHUTDOWN BANK A GROUP 2 MECHANISM 2	CRDW-G13 125V DC
XCA2A-CR	A56-FU1	X		X		GOULD SHAWMUT A25X50-4	≥ 1.71 MILLIOHMS	N/A	0026	#1/0 AWG	SHUTDOWN BANK A GROUP 2 MECHANISM 3	CRDW-N9 125V DC
XCA2A-CR	A56-FU2	X		X		GOULD SHAWMUT A25X50-4	≥ 1.71 MILLIOHMS	N/A	0026	#1/0 AWG	SHUTDOWN BANK A GROUP 2 MECHANISM 4	CRDW-J3 125V DC
XCA2A-CR	A57-FU1		X	X		GOULD SHAWMUT A25X50-4	≥ 1.71 MILLIOHMS	N/A	0025 0024	#1/0 AWG	SHUTDOWN BANK A CONTROL BANK C,A GROUP 2 MECHANISM 1	CRDW-C7, H6, B6 125V DC
XCA2A-CR	A57-FU2		X	X		GOULD SHAWMUT A25X50-4	≥ 1.71 MILLIOHMS	N/A	0026 0025 0024	#1/0 AWG	SHUTDOWN BANK A CONTROL BANK C,A GROUP 2 MECHANISM 2	CRDW-G13,F8,F14 125V DC
XCA2A-CR	A58-FU1		X	X		GOULD SHAWMUT A25X50-4	≥ 1.71 MILLIOHMS	N/A	0026 0025	#1/0 AWG	SHUTDOWN BANK A CONTROL BANK C,A GROUP 2 MECHANISM 3	CRDW-N9,H10,P10 125V DC
XCA2A-CR	A58-FU2		X	X		GOULD SHAWMUT A25X50-4	≥ 1.71 MILLIOHMS	N/A	0026 0025	#1/0 AWG	SHUTDOWN BANK A CONTROL BANK C,A GROUP 2 MECHANISM 4	CRDW-J3, K8, K2 125V DC
XCA2A-CR	A59-FU13	X		X		BUSS P/N (BB1425)	≥ 37.5 MILLIOHMS	N/A	0024	#1/0 AWG	CONTROL BANK A GROUP 2 MECHANISM 1	CRDW-B6 125V DC
XCA2A-CR	A59-FU14	X		X		BUSS P/N (BB1425)	≥ 37.5 MILLIOHMS	N/A	0024	#1/0 AWG	CONTROL BANK A GROUP 2 MECHANISM 2	CRDW-F14 125V DC
XCA2A-CR	A59-FU15	X		X		BUSS P/N (BB1425)	≥ 37.5 MILLIOHMS	N/A	0025	#1/0 AWG	CONTROL BANK A GROUP 2 MECHANISM 3	CRDW-P10 125V DC
XCA2A-CR	A59-FU16	X		X		BUSS P/N (BB1425)	≥ 37.5 MILLIOHMS	N/A	0025	#1/0 AWG	CONTROL BANK A GROUP 2 MECHANISM 4	CRDW-K2 125V DC
XCA2A-CR	A59-FU17		X	X		BUSS P/N (BB1425)	≥ 37.5 MILLIOHMS	N/A	0024	#1/0 AWG	CONTROL BANK A GROUP 2 MECHANISM 1	CRDW-B6 125V DC
XCA2A-CR	A59-FU18		X	X		BUSS P/N (BB1425)	≥ 37.5 MILLIOHMS	N/A	0024	#1/0 AWG	CONTROL BANK A GROUP 2 MECHANISM 2	CRDW-F14 125V DC
XCA2A-CR	A59-FU19		X	X		BUSS P/N (BB1425)	≥ 37.5 MILLIOHMS	N/A	0025	#1/0 AWG	CONTROL BANK A GROUP 2 MECHANISM 3	CRDW-P10 125V DC
XCA2A-CR	A59-FU20		X	X		BUSS P/N (BB1425)	≥ 37.5 MILLIOHMS	N/A	0025	#1/0 AWG	CONTROL BANK A GROUP 2 MECHANISM 4	CRDW-K2 125V DC

MISCELLANEOUS PANELS – FUSES (DC)

OVERCURRENT PROTECTION DEVICE									PENETRATION		LOAD EQUIPMENT NO – SYSTEM DESCRIPTION	REMARKS
LOCATION		APPLICATION		CLASS		TYPE	TEST SET POINT	RESPONSE TIME	NO XRP	CONDUCTOR SIZE		
PARENT DEVICE NO	UNIT NO OR TAG NO.	PRI	BACK-UP	1E	NON 1E							
XCA2A-CR	A59-FU21	X			X	BUSS P/N (BB1425)	≥ 37.5 MILLIOHMS	N/A	0024	#1/0 AWG	CONTROL BANK A GROUP 2 MECHANISM 1	CRDW-B6 125V DC
XCA2A-CR	A59-FU22	X			X	BUSS P/N (BB1425)	≥ 37.5 MILLIOHMS	N/A	0024	#1/0 AWG	CONTROL BANK A GROUP 2 MECHANISM 2	CRDW-F14 125V DC
XCA2A-CR	A59-FU23	X			X	BUSS P/N (BB1425)	≥ 37.5 MILLIOHMS	N/A	0025	#1/0 AWG	CONTROL BANK A GROUP 2 MECHANISM 3	CRDW-P10 125V DC
XCA2A-CR	A59-FU24	X			X	BUSS P/N (BB1425)	≥ 37.5 MILLIOHMS	N/A	0025	#1/0 AWG	CONTROL BANK A GROUP 2 MECHANISM 4	CRDW-K2 125V DC
XCA2A-CR	A60-FU25	X			X	BUSS P/N (BB1425)	≥ 37.5 MILLIOHMS	N/A	0025	#1/0 AWG	CONTROL BANK C GROUP 2 MECHANISM 1	CRDW-H6 125V DC
XCA2A-CR	A60-FU26	X			X	BUSS P/N (BB1425)	≥ 37.5 MILLIOHMS	N/A	0025	#1/0 AWG	CONTROL BANK C GROUP 2 MECHANISM 2	CRDW-F8 125V DC
XCA2A-CR	A60-FU27	X			X	BUSS P/N (BB1425)	≥ 37.5 MILLIOHMS	N/A	0025	#1/0 AWG	CONTROL BANK C GROUP 2 MECHANISM 3	CRDW-H10 125V DC
XCA2A-CR	A60-FU28	X			X	BUSS P/N (BB1425)	≥ 37.5 MILLIOHMS	N/A	0025	#1/0 AWG	CONTROL BANK C GROUP 2 MECHANISM 4	CRDW-K8 125V DC
XCA2A-CR	A60-FU29		X	X		BUSS P/N (BB1425)	≥ 37.5 MILLIOHMS	N/A	0025	#1/0 AWG	CONTROL BANK C GROUP 2 MECHANISM 1	CRDW-H6 125V DC
XCA2A-CR	A60-FU30		X	X		BUSS P/N (BB1425)	≥ 37.5 MILLIOHMS	N/A	0025	#1/0 AWG	CONTROL BANK C GROUP 2 MECHANISM 2	CRDW-F8 125V DC
XCA2A-CR	A60-FU31		X	X		BUSS P/N (BB1425)	≥ 37.5 MILLIOHMS	N/A	0025	#1/0 AWG	CONTROL BANK C GROUP 2 MECHANISM 3	CRDW-H10 125V DC
XCA2A-CR	A60-FU32		X	X		BUSS P/N (BB1425)	≥ 37.5 MILLIOHMS	N/A	0025	#1/0 AWG	CONTROL BANK C GROUP 2 MECHANISM 4	CRDW-K8 125V DC
XCA2A-CR	A60-FU33	X		X		BUSS P/N (BB1425)	≥ 37.5 MILLIOHMS	N/A	0025	#1/0 AWG	CONTROL BANK C GROUP 2 MECHANISM 1	CRDW-H6 125V DC
XCA2A-CR	A60-FU34	X		X		BUSS P/N (BB1425)	≥ 37.5 MILLIOHMS	N/A	0025	#1/0 AWG	CONTROL BANK C GROUP 2 MECHANISM 2	CRDW-F8 125V DC
XCA2A-CR	A60-FU35	X		X		BUSS P/N (BB1425)	≥ 37.5 MILLIOHMS	N/A	0025	#1/0 AWG	CONTROL BANK C GROUP 2 MECHANISM 3	CRDW-H10 125V DC
XCA2A-CR	A60-FU36	X		X		BUSS P/N (BB1425)	≥ 37.5 MILLIOHMS	N/A	0025	#1/0 AWG	CONTROL BANK C GROUP 2 MECHANISM 4	CRDW-K8 125V DC
XCA2A-CR	A60-FU37		X	X		BUSS P/N (BB1425)	≥ 37.5 MILLIOHMS	N/A	0025	#1/0 AWG	SHUTDOWN BANK A GROUP 2 MECHANISM 1	CRDW-C7 125V DC
XCA2A-CR	A60-FU38		X	X		BUSS P/N (BB1425)	≥ 37.5 MILLIOHMS	N/A	0025	#1/0 AWG	SHUTDOWN BANK A GROUP 2 MECHANISM 2	CRDW-G13 125V DC
XCA2A-CR	A60-FU39		X	X		BUSS P/N (BB1425)	≥ 37.5 MILLIOHMS	N/A	0026	#1/0 AWG	SHUTDOWN BANK A GROUP 2 MECHANISM 3	CRDW-N9 125V DC
XCA2A-CR	A60-FU40		X	X		BUSS P/N (BB1425)	≥ 37.5 MILLIOHMS	N/A	0026	#1/0 AWG	SHUTDOWN BANK A GROUP 2 MECHANISM 4	CRDW-J3 125V DC
XCA2A-CR	A61-FU41	X			X	BUSS P/N (BB1425)	≥ 37.5 MILLIOHMS	N/A	0025	#1/0 AWG	SHUTDOWN BANK A GROUP 2 MECHANISM 1	CRDW-C7 125V DC
XCA2A-CR	A61-FU42	X			X	BUSS P/N (BB1425)	≥ 37.5 MILLIOHMS	N/A	0026	#1/0 AWG	SHUTDOWN BANK A GROUP 2 MECHANISM 2	CRDW-G13 125V DC
XCA2A-CR	A61-FU43	X			X	BUSS P/N (BB1425)	≥ 37.5 MILLIOHMS	N/A	0026	#1/0 AWG	SHUTDOWN BANK A GROUP 2 MECHANISM 3	CRDW-N9 125V DC
XCA2A-CR	A61-FU44	X			X	BUSS P/N (BB1425)	≥ 37.5 MILLIOHMS	N/A	0026	#1/0 AWG	SHUTDOWN BANK A GROUP 2 MECHANISM 4	CRDW-J3 125V DC
XCA2A-CR	A61-FU45		X	X		BUSS P/N (BB1425)	≥ 37.5 MILLIOHMS	N/A	0025 0024	#1/0 AWG	SHUTDOWN BANK A CONTROL BANK C,A GROUP 2 MECHANISM 1	CRDW-C7, H6, B6 125V DC
XCA2A-CR	A61-FU46		X	X		BUSS P/N (BB1425)	≥ 37.5 MILLIOHMS	N/A	0026 0025 0024	#1/0 AWG	SHUTDOWN BANK A CONTROL BANK C,A GROUP 2 MECHANISM 2	CRDW-G13,F8,F14 125V DC
XCA2A-CR	A61-FU47		X	X		BUSS P/N (BB1425)	≥ 37.5 MILLIOHMS	N/A	0026 0025	#1/0 AWG	SHUTDOWN BANK A CONTROL BANK C,A GROUP 2 MECHANISM 3	CRDW-N9,H10,P10 125V DC
XCA2A-CR	A61-FU48		X	X		BUSS P/N (BB1425)	≥ 37.5 MILLIOHMS	N/A	0026 0025	#1/0 AWG	SHUTDOWN BANK A CONTROL BANK C,A GROUP 2 MECHANISM 4	CRDW-J3, K8, K2 125V DC
XCA2A-CR	A61-FU49	X		X		BUSS P/N (BB1425)	≥ 37.5 MILLIOHMS	N/A	0025	#1/0 AWG	SHUTDOWN BANK A GROUP 2 MECHANISM 1	CRDW-C7 125V DC
XCA2A-CR	A61-FU50	X		X		BUSS P/N (BB1425)	≥ 37.5 MILLIOHMS	N/A	0026	#1/0 AWG	SHUTDOWN BANK A GROUP 2 MECHANISM 2	CRDW-G13 125V DC

NUCLEAR SAFETY RELATED

RN 07-006

1/4"=1'-0" (0' 5' 10' 15' 20')

NO.	DATE	BY	REVISION	CKD. BY	LE APPROVAL
5	2/5/07	JMR	REVISED PER ECR-50625	MGR	TOC
4	9/24/01	DDJ	REVISED PER ECR-70028	MGR	DDJ

FSAR Figure 8G-7

SOUTH CAROLINA ELECTRIC & GAS COMPANY

VIRGIL C. SUMMER NUCLEAR STATION

ELECTRICAL

CONTAINMENT PENETRATION CONDUCTOR OVERCURRENT PROTECTION DEVICES

DESIGN ENGINEERING

SCANA a SCANA COMPANY — V. C. SUMMER NUCLEAR STATION JENKINSVILLE, S. C.

MADE	CHECKED	LE APPROVAL
1. DDJ	2. MGR	3. DDJ

SCALE NO SCALE — E-224-532 — DRAWING NUMBER — SHT. NUMBER 7 — REV 5

MISCELLANEOUS PANELS – FUSES (DC)

OVERCURRENT PROTECTION DEVICE								PENETRATION		LOAD EQUIPMENT NO. – SYSTEM DESCRIPTION	REMARKS
LOCATION		APPLICATION		CLASS							
PARENT DEVICE NO.	UNIT NO. OR TAG NO.	PRI	BACK-UP	T	R	TYPE	TEST SET POINT	RESPONSE TIME	NO. XRP	CONDUCTOR SIZE		
XCA2A-CR	A61-FU51	X		X		BUSS P/N (BB1429)	≥37.5 MILLIOHMS	N/A	0026	#1/0 AWG	SHUTDOWN BANK A GROUP 2 MECHANISM 3	CROM-N9 125V DC
XCA2A-CR	A61-FU52	X		X		BUSS P/N (BB1429)	≥37.5 MILLIOHMS	N/A	0026	#1/0 AWG	SHUTDOWN BANK A GROUP 2 MECHANISM 4	CROM-J3 125V DC
XCA2B-CR	A51-FU1	X		X		GOULD SHAWMUT A25X50-4	≥1.71 MILLIOHMS	N/A	0055	#1/0 AWG	CONTROL BANK B GROUP 2 MECHANISM 1	CROM-D6 125V DC
XCA2B-CR	A51-FU2	X		X		GOULD SHAWMUT A25X50-4	≥1.71 MILLIOHMS	N/A	0055	#1/0 AWG	CONTROL BANK B GROUP 2 MECHANISM 2	CROM-F12 125V DC
XCA2B-CR	A52-FU1	X		X		GOULD SHAWMUT A25X50-4	≥1.71 MILLIOHMS	N/A	0055	#1/0 AWG	CONTROL BANK B GROUP 2 MECHANISM 3	CROM-M10 125V DC
XCA2B-CR	A52-FU2	X		X		GOULD SHAWMUT A25X50-4	≥1.71 MILLIOHMS	N/A	0055	#1/0 AWG	CONTROL BANK B GROUP 2 MECHANISM 4	CROM-K4 125V DC
XCA2B-CR	A53-FU1	X		X		GOULD SHAWMUT A25X50-4	≥1.71 MILLIOHMS	N/A	0055	#1/0 AWG	CONTROL BANK D GROUP 2 MECHANISM 1	CROM-F6 125V DC
XCA2B-CR	A53-FU2	X		X		GOULD SHAWMUT A25X50-4	≥1.71 MILLIOHMS	N/A	0055	#1/0 AWG	CONTROL BANK D GROUP 2 MECHANISM 2	CROM-F10 125V DC
XCA2B-CR	A54-FU1	X		X		GOULD SHAWMUT A25X50-4	≥1.71 MILLIOHMS	N/A	0056	#1/0 AWG	CONTROL BANK D GROUP 2 MECHANISM 3	CROM-K10 125V DC
XCA2B-CR	A54-FU2	X		X		GOULD SHAWMUT A25X50-4	≥1.71 MILLIOHMS	N/A	0056	#1/0 AWG	CONTROL BANK D GROUP 2 MECHANISM 4	CROM-K8 125V DC
XCA2B-CR	A55-FU1	X		X		GOULD SHAWMUT A25X50-4	≥1.71 MILLIOHMS	N/A	0056	#1/0 AWG	SHUTDOWN BANK B GROUP 2 MECHANISM 1	CROM-G7 125V DC
XCA2B-CR	A55-FU2	X		X		GOULD SHAWMUT A25X50-4	≥1.71 MILLIOHMS	N/A	0056	#1/0 AWG	SHUTDOWN BANK B GROUP 2 MECHANISM 2	CROM-G9 125V DC
XCA2B-CR	A56-FU1	X		X		GOULD SHAWMUT A25X50-4	≥1.71 MILLIOHMS	N/A	0056	#1/0 AWG	SHUTDOWN BANK B GROUP 2 MECHANISM 3	CROM-J9 125V DC
XCA2B-CR	A56-FU2	X		X		GOULD SHAWMUT A25X50-4	≥1.71 MILLIOHMS	N/A	0056	#1/0 AWG	SHUTDOWN BANK B GROUP 2 MECHANISM 4	CROM-J7 125V DC
XCA2B-CR	A57-FU1		X	X		GOULD SHAWMUT A25X50-4	≥1.71 MILLIOHMS	N/A	0055 0056	#1/0 AWG	CONTROL BANK B,D SHUTDOWN BANK B GROUP 2 MECHANISM 1	CROM-D6,F6,G7 125V DC
XCA2B-CR	A57-FU2		X	X		GOULD SHAWMUT A25X50-4	≥1.71 MILLIOHMS	N/A	0055 0056	#1/0 AWG	CONTROL BANK B,D SHUTDOWN BANK B GROUP 2 MECHANISM 2	CROM-F12,F10,G9 125V DC
XCA2B-CR	A58-FU1		X	X		GOULD SHAWMUT A25X50-4	≥1.71 MILLIOHMS	N/A	0055 0056	#1/0 AWG	CONTROL BANK B,D SHUTDOWN BANK B GROUP 2 MECHANISM 3	CROM-M10,K10,J9 125V DC
XCA2B-CR	A58-FU2		X	X		GOULD SHAWMUT A25X50-4	≥1.71 MILLIOHMS	N/A	0055 0056	#1/0 AWG	CONTROL BANK B,D SHUTDOWN BANK B GROUP 2 MECHANISM 4	CROM-K4,K8,J7 125V DC
XCA2B-CR	A59-FU13	X		X		BUSS P/N (BB1429)	≥37.5 MILLIOHMS	N/A	0055	#1/0 AWG	CONTROL BANK B GROUP 2 MECHANISM 1	CROM-D6 125V DC
XCA2B-CR	A59-FU14	X		X		BUSS P/N (BB1429)	≥37.5 MILLIOHMS	N/A	0055	#1/0 AWG	CONTROL BANK B GROUP 2 MECHANISM 2	CROM-F12 125V DC
XCA2B-CR	A59-FU15	X		X		BUSS P/N (BB1429)	≥37.5 MILLIOHMS	N/A	0055	#1/0 AWG	CONTROL BANK B GROUP 2 MECHANISM 3	CROM-M10 125V DC
XCA2B-CR	A59-FU16	X		X		BUSS P/N (BB1429)	≥37.5 MILLIOHMS	N/A	0055	#1/0 AWG	CONTROL BANK B GROUP 2 MECHANISM 4	CROM-K4 125V DC
XCA2B-CR	A59-FU17		X	X		BUSS P/N (BB1429)	≥37.5 MILLIOHMS	N/A	0055	#1/0 AWG	CONTROL BANK B GROUP 2 MECHANISM 1	CROM-D6 125V DC
XCA2B-CR	A59-FU18		X	X		BUSS P/N (BB1429)	≥37.5 MILLIOHMS	N/A	0055	#1/0 AWG	CONTROL BANK B GROUP 2 MECHANISM 2	CROM-F12 125V DC
XCA2B-CR	A59-FU19		X	X		BUSS P/N (BB1429)	≥37.5 MILLIOHMS	N/A	0055	#1/0 AWG	CONTROL BANK B GROUP 2 MECHANISM 3	CROM-M10 125V DC
XCA2B-CR	A59-FU20		X	X		BUSS P/N (BB1429)	≥37.5 MILLIOHMS	N/A	0055	#1/0 AWG	CONTROL BANK B GROUP 2 MECHANISM 4	CROM-K4 125V DC
XCA2B-CR	A59-FU21	X		X		BUSS P/N (BB1429)	≥37.5 MILLIOHMS	N/A	0055	#1/0 AWG	CONTROL BANK B GROUP 2 MECHANISM 1	CROM-D6 125V DC
XCA2B-CR	A59-FU22	X		X		BUSS P/N (BB1429)	≥37.5 MILLIOHMS	N/A	0055	#1/0 AWG	CONTROL BANK B GROUP 2 MECHANISM 2	CROM-F12 125V DC
XCA2B-CR	A59-FU23	X		X		BUSS P/N (BB1429)	≥37.5 MILLIOHMS	N/A	0055	#1/0 AWG	CONTROL BANK B GROUP 2 MECHANISM 3	CROM-M10 125V DC
XCA2B-CR	A59-FU24	X		X		BUSS P/N (BB1429)	≥37.5 MILLIOHMS	N/A	0055	#1/0 AWG	CONTROL BANK B GROUP 2 MECHANISM 4	CROM-K4 125V DC
XCA2B-CR	A60-FU25	X		X		BUSS P/N (BB1429)	≥37.5 MILLIOHMS	N/A	0055	#1/0 AWG	CONTROL BANK D GROUP 2 MECHANISM 1	CROM-F6 125V DC
XCA2B-CR	A60-FU26	X		X		BUSS P/N (BB1429)	≥37.5 MILLIOHMS	N/A	0055	#1/0 AWG	CONTROL BANK D GROUP 2 MECHANISM 2	CROM-F10 125V DC
XCA2B-CR	A60-FU27	X		X		BUSS P/N (BB1429)	≥37.5 MILLIOHMS	N/A	0056	#1/0 AWG	CONTROL BANK D GROUP 2 MECHANISM 3	CROM-K10 125V DC
XCA2B-CR	A60-FU28	X		X		BUSS P/N (BB1429)	≥37.5 MILLIOHMS	N/A	0056	#1/0 AWG	CONTROL BANK D GROUP 2 MECHANISM 4	CROM-K8 125V DC
XCA2B-CR	A60-FU29		X	X		BUSS P/N (BB1429)	≥37.5 MILLIOHMS	N/A	0055	#1/0 AWG	CONTROL BANK D GROUP 2 MECHANISM 1	CROM-F6 125V DC

MISCELLANEOUS PANELS – FUSES (DC)

OVERCURRENT PROTECTION DEVICE								PENETRATION		LOAD EQUIPMENT NO. – SYSTEM DESCRIPTION	REMARKS
LOCATION		APPLICATION		CLASS							
PARENT DEVICE NO.	UNIT NO. OR TAG NO.	PRI	BACK-UP	T	R	TYPE	TEST SET POINT	RESPONSE TIME	NO. XRP	CONDUCTOR SIZE		
XCA2B-CR	A60-FU30		X	X		BUSS P/N (BB1429)	≥37.5 MILLIOHMS	N/A	0055	#1/0 AWG	CONTROL BANK D GROUP 2 MECHANISM 2	CROM-F10 125V DC
XCA2B-CR	A60-FU31		X	X		BUSS P/N (BB1429)	≥37.5 MILLIOHMS	N/A	0056	#1/0 AWG	CONTROL BANK D GROUP 2 MECHANISM 3	CROM-K10 125V DC
XCA2B-CR	A60-FU32		X	X		BUSS P/N (BB1429)	≥37.5 MILLIOHMS	N/A	0056	#1/0 AWG	CONTROL BANK D GROUP 2 MECHANISM 4	CROM-K8 125V DC
XCA2B-CR	A63-FU33	X		X		BUSS P/N (BB1429)	≥37.5 MILLIOHMS	N/A	0055	#1/0 AWG	CONTROL BANK D GROUP 2 MECHANISM 1	CROM-F6 125V DC
XCA2B-CR	A60-FU34	X		X		BUSS P/N (BB1429)	≥37.5 MILLIOHMS	N/A	0055	#1/0 AWG	CONTROL BANK D GROUP 2 MECHANISM 2	CROM-F10 125V DC
XCA2B-CR	A60-FU35	X		X		BUSS P/N (BB1429)	≥37.5 MILLIOHMS	N/A	0056	#1/0 AWG	CONTROL BANK D GROUP 2 MECHANISM 3	CROM-K10 125V DC
XCA2B-CR	A60-FU36	X		X		BUSS P/N (BB1429)	≥37.5 MILLIOHMS	N/A	0056	#1/0 AWG	CONTROL BANK D GROUP 2 MECHANISM 4	CROM-K8 125V DC
XCA2B-CR	A60-FU37		X	X		BUSS P/N (BB1429)	≥37.5 MILLIOHMS	N/A	0056	#1/0 AWG	SHUTDOWN BANK B GROUP 2 MECHANISM 1	CROM-G7 125V DC
XCA2B-CR	A60-FU38		X	X		BUSS P/N (BB1429)	≥37.5 MILLIOHMS	N/A	0056	#1/0 AWG	SHUTDOWN BANK B GROUP 2 MECHANISM 2	CROM-G9 125V DC
XCA2B-CR	A60-FU39		X	X		BUSS P/N (BB1429)	≥37.5 MILLIOHMS	N/A	0056	#1/0 AWG	SHUTDOWN BANK B GROUP 2 MECHANISM 3	CROM-J9 125V DC
XCA2B-CR	A60-FU40		X	X		BUSS P/N (BB1429)	≥37.5 MILLIOHMS	N/A	0056	#1/0 AWG	SHUTDOWN BANK B GROUP 2 MECHANISM 4	CROM-J7 125V DC
XCA2B-CR	A61-FU41	X		X		BUSS P/N (BB1429)	≥37.5 MILLIOHMS	N/A	0056	#1/0 AWG	SHUTDOWN BANK B GROUP 2 MECHANISM 1	CROM-G7 125V DC
XCA2B-CR	A61-FU42	X		X		BUSS P/N (BB1429)	≥37.5 MILLIOHMS	N/A	0056	#1/0 AWG	SHUTDOWN BANK B GROUP 2 MECHANISM 2	CROM-G9 125V DC
XCA2B-CR	A61-FU43	X		X		BUSS P/N (BB1429)	≥37.5 MILLIOHMS	N/A	0056	#1/0 AWG	SHUTDOWN BANK B GROUP 2 MECHANISM 3	CROM-J9 125V DC
XCA2B-CR	A61-FU44	X		X		BUSS P/N (BB1429)	≥37.5 MILLIOHMS	N/A	0056	#1/0 AWG	SHUTDOWN BANK B GROUP 2 MECHANISM 4	CROM-J7 125V DC
XCA2B-CR	A61-FU45		X	X		BUSS P/N (BB1429)	≥37.5 MILLIOHMS	N/A	0055 0056	#1/0 AWG	CONTROL BANK B,D SHUTDOWN BANK B GROUP 2 MECHANISM 1	CROM-D6,F6,G7 125V DC
XCA2B-CR	A61-FU46		X	X		BUSS P/N (BB1429)	≥37.5 MILLIOHMS	N/A	0055 0056	#1/0 AWG	CONTROL BANK B,D SHUTDOWN BANK B GROUP 2 MECHANISM 2	CROM-F12,F10,G9 125V DC
XCA2B-CR	A61-FU47		X	X		BUSS P/N (BB1429)	≥37.5 MILLIOHMS	N/A	0055 0056	#1/0 AWG	CONTROL BANK B,D SHUTDOWN BANK B GROUP 2 MECHANISM 3	CROM-M10,K10,J9 125V DC
XCA2B-CR	A61-FU48		X	X		BUSS P/N (BB1429)	≥37.5 MILLIOHMS	N/A	0055 0056	#1/0 AWG	CONTROL BANK B,D SHUTDOWN BANK B GROUP 2 MECHANISM 4	CROM-K4,K8,J7 125V DC
XCA2B-CR	A61-FU49	X		X		BUSS P/N (BB1429)	≥37.5 MILLIOHMS	N/A	0056	#1/0 AWG	SHUTDOWN BANK B GROUP 2 MECHANISM 1	CROM-G7 125V DC
XCA2B-CR	A61-FU50	X		X		BUSS P/N (BB1429)	≥37.5 MILLIOHMS	N/A	0056	#1/0 AWG	SHUTDOWN BANK B GROUP 2 MECHANISM 2	CROM-G9 125V DC
XCA2B-CR	A61-FU51	X		X		BUSS P/N (BB1429)	≥37.5 MILLIOHMS	N/A	0056	#1/0 AWG	SHUTDOWN BANK B GROUP 2 MECHANISM 3	CROM-J9 125V DC
XCA2B-CR	A61-FU52	X		X		BUSS P/N (BB1429)	≥37.5 MILLIOHMS	N/A	0056	#1/0 AWG	SHUTDOWN BANK B GROUP 2 MECHANISM 4	CROM-J7 125V DC
XCP5101-NC (XCP5100 SUBPNL 1)	FU-HR25	X		X		GOULD SHAWMUT OT-6	≥20.2 MILLIOHMS	N/A	0028	#12 AWG	125V CONTROL	OUTBOARD CIRCUIT NO. HRW2A
XCP5101-NC (XCP5100 SUBPNL 1)	FU-HR27	X		X		GOULD SHAWMUT OT-6	≥20.2 MILLIOHMS	N/A	0028	#12 AWG	125V CONTROL	OUTBOARD CIRCUIT NO. HRW21A
XCP5101-NC (XCP5100 SUBPNL 1)	FU-HR28	X		X		BUSS NON-6	≥19.12 MILLIOHMS	N/A	0028	#12 AWG	125V CONTROL	OUTBOARD CIRCUIT NO. HRW23A

MISCELLANEOUS PANELS – FUSES (DC)

OVERCURRENT PROTECTION DEVICE								PENETRATION		LOAD EQUIPMENT NO. – SYSTEM DESCRIPTION	REMARKS (OUTBOARD CKT NO.)
LOCATION		APPLICATION		CLASS							
PARENT DEVICE NO.	UNIT NO. OR TAG NO.	PRI	BACK-UP	T	R	TYPE	TEST SET POINT	RESPONSE TIME	NO. XRP	CONDUCTOR SIZE		
XCP5102-NC (XCP5100 SUBPNL 1)	FU-SS01	X	X		X	GOULD SHAWMUT OT-6	≥20.2 MILLIOHMS	N/A	0028	#12 AWG	125V CONTROL	SSW2A SSW7A
XCP5102-NC (XCP5100 SUBPNL 1)	FU-SS03	X	X		X	GOULD SHAWMUT OT-6	≥20.2 MILLIOHMS	N/A	0028	#12 AWG	125V CONTROL	SSW22A SSW27A
XCP5102-NC (XCP5100 SUBPNL 1)	FU-SS07	X	X		X	GOULD SHAWMUT OT-6	≥20.2 MILLIOHMS	N/A	0028	#12 AWG	125V CONTROL	SSW43A
XCP5102-NC (XCP5100 SUBPNL 1)	FU-SS08	X	X		X	GOULD SHAWMUT OT-10	≥14.67 MILLIOHMS	N/A	0028	#12 AWG	125V CONTROL	SSW53A
XCP5102-NC (XCP5100 SUBPNL 1)	FU-SS10	X	X		X	GOULD SHAWMUT OT-6	≥20.2 MILLIOHMS	N/A	0028	#12 AWG	125V CONTROL	SSW73A
XCP5102-NC (XCP5100 SUBPNL 1)	FU-SS11	X	X		X	GOULD SHAWMUT OT-3	≥ 86.8 MILLIOHMS @ 25°C	N/A	0028	#12 AWG	125V CONTROL	SSW83A
XCP5104-NC (XCP5100 SUBPNL 2)	FU-HR26	X	X		X	BUSS NON-6	≥19.12 MILLIOHMS	N/A	0030	#12 AWG	125V CONTROL	HRW11B
XCP5104-NC (XCP5100 SUBPNL 2)	FU-IA51	X	X		X	GOULD SHAWMUT OT-6	≥20.2 MILLIOHMS	N/A	0030	#12 AWG	125V CONTROL	IAW13B
XCP5104-NC (XCP5100 SUBPNL 2)	FU-SS44	X	X		X	GOULD SHAWMUT OT-6	≥20.2 MILLIOHMS	N/A	0030	#12 AWG	125V CONTROL	SSW164B
XCP5106-NC (XCP5100 SUBPNL 3)	FU-HR50	X	X		X	BUSS NON-2	≥ 76.7 MILLIOHMS	N/A	0028	#12 AWG	125V CONTROL	NOW1A
XCP5106-NC (XCP5100 SUBPNL 3)	FU-SI59	X	X		X	BUSS NON-1½	≥ 121.6 MILLIOHMS	N/A	0028	#12 AWG	125V CONTROL	SIW11A

RN 07-006

THIS IS A NUCLEAR SAFETY RELATED DOCUMENT. NO DEVIATION SHALL BE INITIATED OR PERFORMED WITHOUT PRIOR DOCUMENTATION AND WRITTEN APPROVAL

1/4"= 1'-0" (0' 5' 10' 15' 20')

FSAR Figure 8G-8

SOUTH CAROLINA ELECTRIC & GAS COMPANY

VIRGIL C. SUMMER NUCLEAR STATION

ELECTRICAL

CONTAINMENT PENETRATION CONDUCTOR OVERCURRENT PROTECTION DEVICES

DESIGN ENGINEERING

V. C. SUMMER NUCLEAR STATION JENKINSVILLE, S. C.

NO.	DATE	BY	REVISION	CKD. BY	LE APPROVAL
6	3/28/07	JMR	REVISED PER ECR-50625	MGR TOC	
5	5/28/99	RHM	REVISED PER CGSS-99-0311	MGR SCS	
4	4/29/99	DDJ	REVISED PER ECR-50144	RHM GJR	

MADE: DDJ | CHECKED: RHM | LE APPROVAL: GJR

SCALE: NO SCALE | DRAWING NUMBER: E-224-532 | SHT. NUMBER: 8 | REV: 6

MISCELLANEOUS PANELS - FUSES (DC)

OVERCURRENT PROTECTION DEVICE: LOCATION – PARENT DEVICE NO.	UNIT NO. OR TAG NO.	APPLICATION – PRI	BACK-UP	CLASS	CLASS	TYPE	TEST SET POINT	RESPONSE TIME	PENETRATION – NO. XRP	CONDUCTOR SIZE	LOAD EQUIPMENT NO. - SYSTEM DESCRIPTION	REMARKS (OUTBOARD CKT NO.)
XCP6107-NC (XCP6100 SUBPNL 3)	FU-CS59A	X	X		X	BUSS NON-1½	≥ 12.6 MILLIOHMS	N/A	0028	#12 AWG	125V CONTROL	CSV61XA
XCP6107-NC (XCP6100 SUBPNL 3)	FU-CS60A	X	X		X	BUSS NON-1½	≥ 12.6 MILLIOHMS	N/A	0028	#12 AWG	125V CONTROL	CSV71XA
XCP6107-NC (XCP6100 SUBPNL 3)	FU-CS81	X	X		X	GOULD SHAWMUT OT-6	≥20.2 MILLIOHMS	N/A	0028	#12 AWG	125V CONTROL	CSV181XA
XCP6107-NC (XCP6100 SUBPNL 3)	FU-CS82	X	X		X	GOULD SHAWMUT OT-6	≥20.2 MILLIOHMS	N/A	0028	#12 AWG	125V CONTROL	CSV191XA
XCP6107-NC (XCP6100 SUBPNL 3)	FU-CS83A	X	X		X	GOULD SHAWMUT OT-6	≥20.2 MILLIOHMS	N/A	0028	#12 AWG	125V CONTROL	CSV201XA
XCP6107-NC (XCP6100 SUBPNL 3)	FU-CS84A	X	X		X	GOULD SHAWMUT OT-6	≥20.2 MILLIOHMS	N/A	0028	#12 AWG	125V CONTROL	CSV211XA
XCP6107-NC (XCP6100 SUBPNL 3)	FU-CS85A	X	X		X	GOULD SHAWMUT OT-6	≥20.2 MILLIOHMS	N/A	0028	#12 AWG	125V CONTROL	CSV221XA
XCP6107-NC (XCP6100 SUBPNL 3)	FU-RC51	X	X		X	GOULD SHAWMUT OT-6	≥20.2 MILLIOHMS	N/A	0028	#12 AWG	125V CONTROL	RCV30A
XCP6107-NC (XCP6100 SUBPNL 3)	FU-RC52	X	X		X	GOULD SHAWMUT OT-6	≥20.2 MILLIOHMS	N/A	0028	#12 AWG	125V CONTROL	RCV31A
XCP6107-NC (XCP6100 SUBPNL 3)	FU-RC58	X	X		X	BUSS NON-1½	≥ 12.6 MILLIOHMS	N/A	0028	#12 AWG	125V CONTROL	RCV31A
XCP6108-NC (XCP6100 SUBPNL 4)	FU-AK282	X	X		X	BUSS NON-6	≥19.12 MILLIOHMS	N/A	0030	#12 AWG	125V CONTROL	AKV51B
XCP6108-NC (XCP6100 SUBPNL 4)	FU-AK284	X	X		X	GOULD SHAWMUT OT-6	≥20.2 MILLIOHMS	N/A	0030	#12 AWG	125V CONTROL	AKV71B
XCP6108-NC (XCP6100 SUBPNL 4)	FU-CS79	X	X	X		BUSS NON-1½	≥ 12.6 MILLIOHMS	N/A	0030	#12 AWG	125V CONTROL	CSV161X
XCP6108-NC (XCP6100 SUBPNL 4)	FU-CS87	X	X		X	BUSS NON-1½	≥ 12.6 MILLIOHMS	N/A	0030	#12 AWG	125V CONTROL	CSV241B
XCP6108-NC (XCP6100 SUBPNL 5)	FU-CS89	X	X	X		GOULD SHAWMUT OT-6	≥20.2 MILLIOHMS	N/A	0033	#12 AWG	125V CONTROL	CSV261X
XCP6108-NC (XCP6100 SUBPNL 4)	FU-RC30	X	X		X	GOULD SHAWMUT OT-6	≥20.2 MILLIOHMS	N/A	0030	#12 AWG	125V CONTROL	RCV22B
XCP6109-NC (XCP6100 SUBPNL 6)	FU-AK281	X	X		X	BUSS NON-6	≥19.12 MILLIOHMS	N/A	0028	#12 AWG	125V CONTROL	AKV41A
XCP6109-NC (XCP6100 SUBPNL 6)	FU-AK283	X	X		X	BUSS NON-6	≥19.12 MILLIOHMS	N/A	0028	#12 AWG	125V CONTROL	AKV61A
XCP6109-NC (XCP6100 SUBPNL 5)	FU-CS75	X	X	X		GOULD SHAWMUT OT-6	≥20.2 MILLIOHMS	N/A	0033	#12 AWG	125V CONTROL	CSV121X
XCP6109-NC (XCP6100 SUBPNL 5)	FU-CS76	X	X	X		BUSS NON-6	≥19.12 MILLIOHMS	N/A	0033	#12 AWG	125V CONTROL	CSV131X
XCP6109-NC (XCP6100 SUBPNL 5)	FU-CS77	X	X	X		BUSS NON-6	≥19.12 MILLIOHMS	N/A	0033	#12 AWG	125V CONTROL	CSV141X
XCP6109-NC (XCP6100 SUBPNL 5)	FU-CS78	X	X	X		GOULD SHAWMUT OT-6	≥20.2 MILLIOHMS	N/A	0033	#12 AWG	125V CONTROL	CSV151X
XCP6109-NC (XCP6100 SUBPNL 5)	FU-CS80	X	X	X		GOULD SHAWMUT OT-6	≥20.2 MILLIOHMS	N/A	0033	#12 AWG	125V CONTROL	CSV171X
XCP6109-NC (XCP6100 SUBPNL 4)	FU-CS28	X	X		X	BUSS NON-1½	≥ 12.6 MILLIOHMS	N/A	0030	#12 AWG	125V CONTROL	CSV251B
XCP6109-NC (XCP6100 SUBPNL 5)	FU-CS90	X	X	X		GOULD SHAWMUT OT-6	≥20.2 MILLIOHMS	N/A	0033	#12 AWG	125V CONTROL	CSV271X
XCP6109-NC (XCP6100 SUBPNL 5)	FU-CS91	X	X	X		GOULD SHAWMUT OT-6	≥20.2 MILLIOHMS	N/A	0033	#12 AWG	125V CONTROL	CSV281X

MISCELLANEOUS PANELS - FUSES (DC)

OVERCURRENT PROTECTION DEVICE: LOCATION – PARENT DEVICE NO.	UNIT NO. OR TAG NO.	APPLICATION – PRI	BACK-UP	CLASS	CLASS	TYPE	TEST SET POINT	RESPONSE TIME	PENETRATION – NO. XRP	CONDUCTOR SIZE	LOAD EQUIPMENT NO. - SYSTEM DESCRIPTION	REMARKS (OUTBOARD CKT NO.)
XCP6109-NC (XCP6100 SUBPNL 5)	FU-RC54	X	X	X		GOULD SHAWMUT OT-6	≥20.2 MILLIOHMS	N/A	0034	#12 AWG	125V CONTROL	RCV51X
XCP6109-NC (XCP6100 SUBPNL 5)	FU-RC55	X	X	X		BUSS NON-6	≥19.12 MILLIOHMS	N/A	0034	#12 AWG	125V CONTROL	RCV61X
XCP6109-NC (XCP6100 SUBPNL 5)	FU-RC56	X	X	X		GOULD SHAWMUT OT-6	≥20.2 MILLIOHMS	N/A	0034	#12 AWG	125V CONTROL	RCV71X
XCP6109-NC (XCP6100 SUBPNL 5)	FU-S160	X	X	X		BUSS NON-6	≥19.12 MILLIOHMS	N/A	0033	#12 AWG	125V CONTROL	SIV24X
XCP6109-NC (XCP6100 SUBPNL 5)	FU-S161	X	X	X		BUSS NON-6	≥19.12 MILLIOHMS	N/A	0033	#12 AWG	125V CONTROL	SIV25X
XCP6109-NC (XCP6100 SUBPNL 5)	FU-S162	X	X	X		GOULD SHAWMUT OT-6	≥20.2 MILLIOHMS	N/A	0033	#12 AWG	125V CONTROL	SIV34X
XCP6109-NC (XCP6100 SUBPNL 5)	FU-S163	X	X	X		GOULD SHAWMUT OT-6	≥20.2 MILLIOHMS	N/A	0033	#12 AWG	125V CONTROL	SIV35X
XCP6109-NC (XCP6100 SUBPNL 5)	FU-S164	X	X	X		GOULD SHAWMUT OT-6	≥20.2 MILLIOHMS	N/A	0033	#12 AWG	125V CONTROL	SIV44X
XCP6109-NC (XCP6100 SUBPNL 5)	FU-S165	X	X	X		GOULD SHAWMUT OT-6	≥20.2 MILLIOHMS	N/A	0033	#12 AWG	125V CONTROL	SIV45X
XCP6109-NC (XCP6100 SUBPNL 5)	FU-S166	X	X	X		BUSS NON-6	≥19.12 MILLIOHMS	N/A	0033	#12 AWG	125V CONTROL	SIV54X
XCP6109-NC (XCP6100 SUBPNL 5)	FU-S167	X	X	X		GOULD SHAWMUT OT-6	≥20.2 MILLIOHMS	N/A	0033	#12 AWG	125V CONTROL	SIV55X
XCP6109-NC (XCP6100 SUBPNL 5)	FU-S168	X	X	X		GOULD SHAWMUT OT-6	≥20.2 MILLIOHMS	N/A	0033	#12 AWG	125V CONTROL	SIV64X
XCP6109-NC (XCP6100 SUBPNL 5)	FU-S169	X	X	X		BUSS NON-6	≥19.12 MILLIOHMS	N/A	0033	#12 AWG	125V CONTROL	SIV65X
XCP6109-NC (XCP6100 SUBPNL 5)	FU-S170	X	X	X		BUSS NON-6	≥19.12 MILLIOHMS	N/A	0033	#12 AWG	125V CONTROL	SIV74X
XCP6109-NC (XCP6100 SUBPNL 5)	FU-S171	X	X	X		GOULD SHAWMUT OT-6	≥20.2 MILLIOHMS	N/A	0033	#12 AWG	125V CONTROL	SIV75X
XCP6110-NC (XCP6100 SUBPNL 7)	FU-RP50	X	X		X	BUSS NON-1½	≥ 12.6 MILLIOHMS	N/A	0028	#12 AWG	125V CONTROL	RPV2A
XCP6110-NC (XCP6100 SUBPNL 7)	FU-RP53	X	X		X	BUSS NON-6	≥19.12 MILLIOHMS	N/A	0028	#12 AWG	125V CONTROL	RPV33A
XCP6112-NC (XCP6100 SUBPNL 9)	FU-SS46	X	X	X		GOULD SHAWMUT OT-6	≥20.2 MILLIOHMS	N/A	0033	#12 AWG	125V CONTROL	SSV183X

MISCELLANEOUS PANELS - FUSES (DC)

OVERCURRENT PROTECTION DEVICE: LOCATION – PARENT DEVICE NO.	UNIT NO. OR TAG NO.	APPLICATION – PRI	BACK-UP	CLASS	CLASS	TYPE	TEST SET POINT	RESPONSE TIME	PENETRATION – NO. XRP	CONDUCTOR SIZE	LOAD EQUIPMENT NO. - SYSTEM DESCRIPTION	REMARKS (OUTBOARD CKT NO.)
XCP6210-AN	FU1-AN246	X	X	X		BUSS FRN-R6	≥79.35 MILLIOHMS	N/A	0033	#12 AWG	125V CONTROL	ANJ222X
XCP6210-AN	FU2-AN246	X	X		X	GOULD SHAWMUT OT-6	≥20.2 MILLIOHMS	N/A	0030	#12 AWG	125V CONTROL	ANJ232B
XCP6210-AN	FU1-AN248	X	X	X		BUSS NON-6	≥19.12 MILLIOHMS	N/A	0033	#12 AWG	125V CONTROL	ANJ285X
XCP6210-AN	FU2-AN248	X	X		X	GOULD SHAWMUT OT-6	≥20.2 MILLIOHMS	N/A	0033	#12 AWG	125V CONTROL	ANJ271B
XCP6210-AN	FU-NR01A	X	X		X	GOULD SHAWMUT OT-6	≥20.2 MILLIOHMS	N/A	0028	#12 AWG	125V CONTROL	NRC3A
XCP6210-AN	FU-NR243	X	X		X	BUSS NON-6	≥19.12 MILLIOHMS	N/A	0017	#12 AWG	125V CONTROL	NRJ72A
XCP6210-AN	FU-NR242	X	X	X		BUSS NON-6	≥19.12 MILLIOHMS	N/A	0034	#12 AWG	125V CONTROL	NRJ114X
XCP6210-AN	FU-SV78	X	X		X	BUSS NON-6	≥19.12 MILLIOHMS	N/A	0028	#12 AWG	125V CONTROL	SVJ22A
XCP6210-AN	FU-SV79	X	X		X	BUSS NON-6	≥19.12 MILLIOHMS	N/A	0038	#12 AWG	125V CONTROL	SVJ32B
XPN0087-BR	LF-2	X	X	X		BUSS FNM-3 2	≥45 MILLIOHMS	N/A	0034	#12 AWG	125V CONTROL	WL31X
XPN0087-BR	LF-3	X	X	X		BUSS FNM-3 2	≥45 MILLIOHMS	N/A	0034	#12 AWG	125V CONTROL	WL37X
XPN0087-BR	LF-4	X	X	X		BUSS FNM-3.2	≥45 MILLIOHMS	N/A	0034	#12 AWG	125V CONTROL	WL33X
XPN0087-BR	LF-5	X	X	X		BUSS FNM-3 2	≥45 MILLIOHMS	N/A	0034	#12 AWG	125V CONTROL	WL35X
XPN0035-SS	FU1	X	X	X		GOULD SHAWMUT OT-6	≥20.2 MILLIOHMS	N/A	0033	#12 AWG	125V CONTROL	SSJ21X
XPN0035-SS	FU2	X	X	X		GOULD SHAWMUT OT-6	≥20.2 MILLIOHMS	N/A	0033	#12 AWG	125V CONTROL	SSJ31X
XPN0035-SS	FU3	X	X	X		GOULD SHAWMUT OT-6	≥20.2 MILLIOHMS	N/A	0033	#12 AWG	125V CONTROL	SSJ41X
XPN0035-SS	FU4	X	X	X		BUSS NON-6	≥19.12 MILLIOHMS	N/A	0033	#12 AWG	125V CONTROL	SSJ51X
XPN0035-SS	FU5	X	X	X		GOULD SHAWMUT OT-6	≥20.2 MILLIOHMS	N/A	0033	#12 AWG	125V CONTROL	SSJ61X
XPN0035-SS	FU6	X	X	X		BUSS NON-6	≥19.12 MILLIOHMS	N/A	0033	#12 AWG	125V CONTROL	SSJ71X
XPN0035-SS	FU7	X	X	X		GOULD SHAWMUT OT-6	≥20.2 MILLIOHMS	N/A	0033	#12 AWG	125V CONTROL	SSJ81X
XPN0035-SS	FU8	X	X	X		BUSS NON-6	≥19.12 MILLIOHMS	N/A	0033	#12 AWG	125V CONTROL	SSJ91X
XPN0035-SS	FU9	X	X	X		BUSS FRN-R6	≥79.35 MILLIOHMS	N/A	0033	#12 AWG	125V CONTROL	SSJ101X

AMENDMENT 00-01
DECEMBER 2000

THIS IS A NUCLEAR SAFETY RELATED DOCUMENT. NO DEVIATION SHALL BE INITIATED OR PERFORMED WITHOUT PRIOR DOCUMENTATION AND WRITTEN APPROVAL.

FSAR Figure 8G-9

SOUTH CAROLINA ELECTRIC & GAS COMPANY
VIRGIL C. SUMMER NUCLEAR STATION
DESIGN ENGINEERING

NO.	DATE	BY	REVISION		
4		RHM	REVISED PER CGSS-99-0311	MGR	SCS
3		DDJ	REVISED PER ECR-50144	RHM	CJR

DDJ | RHM | CJR

E-224-532 | 9 | 4

MISCELLANEOUS PANELS – FUSES (DC)

OVERCURRENT PROTECTION DEVICE									PENETRATION		LOAD EQUIPMENT NO. – SYSTEM DESCRIPTION	REMARKS (OUTBOARD EXT'NG.)
LOCATION		APPLICATION		CLASS								
PARENT DEVICE NO.	UNIT NO. OR TAG NO.	PRI	BACK-UP	1E	NON-1E	TYPE	TEST SET POINT	RESPONSE TIME	NO. PER PEN	CONDUCTOR SIZE		
1PM1261	FU1		1	X		GOULD SHAWMUT A3715C-1	≥1.78 MILLIOHMS	N/A	-M053	#18 AWG	EMERGENCY LIGHTING PANEL 1	125V DC
1PM1494-2M	FU1, 2	X	X		X	GOULD SHAWMUT TR1510R	≥.655 MILLIOHMS	N/A	0M11	250 MCM	ECB 2M RACK BOT APM1498A	+12V DC
1PM1494-3M	FU3, 4	X	X		X	GOULD SHAWMUT TR1530R	≥.655 MILLIOHMS	N/A	0M10	250 MCM	ECB 3M RACK BOT APM1498C	+12V DC
1PM1495	FU1, 2	X	X		X	BUSS SHAWMUT TR1530R	≥.655 MILLIOHMS	N/A	0M07	250 MCM	ECB 2M RACK BOT APM1498B	+18V DC
1PM1496	FU3, 4	X	X		X	BUSS SHAWMUT TR1530R	≥.655 MILLIOHMS	N/A	0M14	250 MCM	ECB 3M RACK BOT APM1498D	+18V DC
1PM0517-PS	FU1		X	X		GOULD SHAWMUT A2715-1	≥8.81 MILLIOHMS	N/A	0M523 0M443	#14 AWG	M0383-PS PERSONNEL AIRLOCK	PSE13
1PM0517-PS	FU2		X	X		GOULD SHAWMUT A2715-1	≥8.81 MILLIOHMS	N/A	0M523 0M443	#14 AWG	M0383-PS PERSONNEL AIRLOCK	PSE43
2PM7934-3C	FU41	X	X		X	BUSS ABC-6	≥21.33 MILLIOHMS	N/A	0023	#12 AWG	125V CONTROL	CS1498A
2PM7934-3C	FU42	X	X		X	BUSS ABC-6	≥21.33 MILLIOHMS	N/A	0029	#12 AWG	125V CONTROL	CS1358A
2PM7934-3C	FU43	X			X	BUSS ABC-6	≥21.33 MILLIOHMS	N/A	0M28	#12 AWG	125V CONTROL	CS1498A
2PM7934-3C	FU44		X		X	BUSS ABC-6	≥21.33 MILLIOHMS	N/A	0M26	#12 AWG	125V CONTROL	CS1498A
2PM7204-CE	FU-CS58A	X	X		X	GOULD SHAWMUT A7-6	≥20.2 MILLIOHMS	N/A	0M28	#12 AWG	125V CONTROL	CSM218A
2PM7204-CE	FU-CS43A	X	X		X	GOULD SHAWMUT A7-6	≥20.2 MILLIOHMS	N/A	0M28	#12 AWG	125V CONTROL	CSM218A
2PM7203A-CE	FU-CS52A	X	X		X	GOULD SHAWMUT A7-6	≥20.2 MILLIOHMS	N/A	0M28	#12 AWG	125V CONTROL	CSM218A
2PM7208A-CE	FU-CS49C	X	X		X	GOULD SHAWMUT A7-6	≥20.2 MILLIOHMS	N/A	0M28	#12 AWG	125V CONTROL	CSM218A
2PM7208A-CE	FU-CS46A	X	X		X	GOULD SHAWMUT A7-6	≥20.2 MILLIOHMS	N/A	0M28	#12 AWG	125V CONTROL	CSM218A
2PM7203A-CE	FU-CS46C	X	X		X	GOULD SHAWMUT A7-6	≥20.2 MILLIOHMS	N/A	0M28	#12 AWG	125V CONTROL	CSM218A
2PM7203A-CE	FU-CS43A	X	X		X	GOULD SHAWMUT A7-6	≥20.2 MILLIOHMS	N/A	0M28	#12 AWG	125V CONTROL	CSM218A
2PM7204-CE	FU-CS49C	X	X		X	GOULD SHAWMUT A7-6	≥20.2 MILLIOHMS	N/A	0M28	#12 AWG	125V CONTROL	CSM218A
2PM7208A-CE	FU-MCS3	X	X		X	GOULD SHAWMUT A7-6	≥20.2 MILLIOHMS	N/A	0M28	#12 AWG	125V CONTROL	MCM228
2PM7208A-CE	FU-MCS3	X	X		X	GOULD SHAWMUT A7-6	≥20.2 MILLIOHMS	N/A	0M28	#12 AWG	125V CONTROL	MCM228

MISCELLANEOUS PANELS – FUSES (DC)

OVERCURRENT PROTECTION DEVICE									PENETRATION		LOAD EQUIPMENT NO. – SYSTEM DESCRIPTION	REMARKS
LOCATION		APPLICATION		CLASS								
PARENT DEVICE NO.	UNIT NO. OR TAG NO.	PRI	BACK-UP	1E	NON-1E	TYPE	TEST SET POINT	RESPONSE TIME	NO. PER PEN	CONDUCTOR SIZE		
1PM3533-AM DSM-A	FU1 FB2	X	X	X		BUSS FRN-R00	≥1.8 MILLIOHM	N/A	0M16	250 MCM	ECB 1M CREW COOLING SYSTEM FAN 1PM07A	+5V DC
1PM3533-AC DSM-B	FU1 FU2	X	X	X		BUSS FRN-R00	≥1.8 MILLIOHM	N/A	0M18	250 MCM	ECB 1M CREW COOLING SYSTEM FAN 1PM07B	+5V DC
1PM3533-AK DSM-C	FU1 FU2	X	X	X		BUSS FRN-R00	≥1.8 MILLIOHM	N/A	0M19	250 MCM	ECB 1M CREW COOLING SYSTEM FAN 1PM07C	+5V DC
1PM3533-AM DSM-D	FU1 FU2	X	X	X		BUSS FRN-R00	≥1.8 MILLIOHM	N/A	0M15	250 MCM	ECB 1M CREW COOLING SYSTEM FAN 1PM07D	+5V DC

OVERCURRENT PROTECTION DEVICE									PENETRATION		LOAD EQUIPMENT NO. – SYSTEM DESCRIPTION	REMARKS
LOCATION		APPLICATION		CLASS								
PARENT DEVICE NO.	UNIT NO. OR TAG NO.	PRI	BACK-UP	1E	NON-1E	TYPE	TEST SET POINT	RESPONSE TIME	NO. PER PEN	CONDUCTOR SIZE		