Tennessee Valley Authority, Post Office Box 2000, Spring City, Tennessee 37381

August 2, 2017

10 CFR 50.55(a)

ATTN: Document Control Desk
U.S. Nuclear Regulatory Commission
Washington, D.C. 20555-0001

Watts Bar Nuclear Plant, Units 1 and 2
Facility Operating License Nos. NPF-90 and NPF-96
NRC Docket Nos. 50-390 and 50-391

Subject: **Watts Bar Nuclear Plant, Units 1 and 2 - Updated Inservice Test Program**

The purpose of this letter is to provide the Nuclear Regulatory Commission (NRC) with Tennessee Valley Authority (TVA) Technical Instruction (TI), 0-TI-100.006, Revision 6, "Inservice Testing Program," for the Watts Bar Nuclear Plant (WBN) Units 1 and 2. The TI is a combined WBN Unit 1/Unit 2 program document and is being submitted for continual operation of WBN Unit 1 and Unit 2. This revision to the WBN IST Program aligns the WBN Unit 1 and Unit 2 10 year intervals as shown in Section 1.4 of the enclosure. This submittal complies with the American Society of Mechanical Engineers (ASME) Code for Operation and Maintenance of Nuclear Power Plants (OM Code), 2004 Edition through 2006 Addenda, administrative requirement ISTA-3200 to submit the IST plan to the regulatory authority having jurisdiction.

There are no new regulatory commitments contained in this letter. Please direct any questions concerning this matter to Kim Hulvey, WBN Licensing Manager, at (423) 365-7720.

Respectfully,

Paul Simmons
Site Vice President
Watts Bar Nuclear Plant

Enclosure
0-TI-100.006, Rev. 6, "Inservice Testing Program"
cc: See Page 2

cc (Enclosure):

NRC Regional Administrator - Region II
NRC Senior Resident Inspector - Watts Bar Nuclear Plant

Watts Bar Nuclear Plant

Unit 0

Technical Instruction

0-TI-100.006

Inservice Testing Program

Revision 0006

Quality Related

Level of Use: Information Use

Effective Date: 7/6/2017

Responsible Organization: PGM, Engineering Programs Group

Prepared By: Charlie Driskell

Approved By: Jimmy Harvey

Current Revision Description

Type of Change: Intent Tracking Number: 006

PCRs: None

CRs: None

Affected Pages: 3, 79-80, 174-175, 272

Specific changes include the following:

- Relocated 1-CKV-32-293/303/313 & 2-CKV-32-323/333/343 to the Condition Monitoring Program.
- Revised DTJ-09 to delete system 32 CKVs being moved to the Condition Monitoriing Program.

This revision is exempt from the requirements of 10CFR50.59. It implements the requirements for Inservice Testing that are controlled by 10CFR50.55a.

Table Contents

Section	Description	Page
1.0	INTRODUCTION	4
1.1	Purpose	4
1.2	Scope	4
1.3	Applicability	4
1.4	Owner Information and Interval Dates	5
1.5	Regulatory Requirements and WBN Compliance	6
2.0	REFERENCES	8
3.0	PROGRAM DEVELOPMENT	11
3.1	Development of Program Scope	11
3.2	Applicable Drawings and System Descriptions	12
3.3	Development of Component Test Requirements	15
3.4	Description of Appendix A, Pump Test Plan	16
3.5	Description of Appendix B, Valve Test Plan	19
3.6	Description of Appendix F, Snubber Test Plan	27
4.0	STRUCTURE OF PRESERVICE/INSERVICE TESTING PROGRAM REQUIREMENTS	29
4.1	Upper Tier Requirement for IST Program Scope and Content	30
4.2	Administration and Implementation of the IST Program	31
5.0	RECORDS	32
Appendix A, Pump Test Plan		33
Appendix B, Valve Test Plan		48
Appendix C, Pump Relief Requests		242
Appendix D, Valve Relief Requests		250
Appendix E, Deferred Test Justifications		263
Appendix F, Snubber Test Plan		305
Appendix G, Snubber Relief Requests		371
Appendix H, Pumps Exempt from the IST Program		379
Appendix I, Valves Exempt from the IST Program		382
Appendix J, Snubbers Exempt from the IST Program		490

1.0 INTRODUCTION

1.1 Purpose

This procedure represents the Watts Bar Nuclear Plant (WBN) Inservice Testing (IST) Program developed to satisfy the requirements stipulated in the Code of Federal Regulations, Title 10, Part 50.55a (10CFR50.55a), paragraphs (f) and (g) and Technical Specification 5.7.2.11.

This procedure also defines the scope and test requirements for testing required to be performed during the Unit 2 (U2) Preservice Testing (PST) period. U2 pumps, valves, and,pressure relief devices not previously in scope of the Unit 1 (U1) IST Program could be in scope of either American Society of Mechanical Engineers (ASME) Operations and Maintenance (OM) Code, 2001 Edition through 2003 Addenda, or OM Code, 2004 Edition through 2006 Addenda. U2 Snubbers previously in scope of the WBN U2 Preservice Inspection (PSI) Program were not in scope of this procedure during the U2 PST period.

1.2 Scope

The IST Program establishes the testing and examination requirement to assess operational readiness of certain ASME Code Class 1, 2, and 3 components important to nuclear safety. These requirements apply to:

A. Pumps and valves required to perform a specific function in shutting down the reactor to safe shutdown condition, in maintaining the safe shutdown condition, or in mitigating the consequences of an accident;

B. Pressure relief devices that protect systems or portions of systems that perform one or more of these three functions;

C. Dynamic restraints (snubbers) used in systems that perform one or more of these three functions, or to ensure the integrity of the reactor coolant pressure boundary.

Both WBN units are designed as Hot Standby (Mode 3) for the safe shutdown condition.

1.3 Applicability

This procedure was not applicable for U1 components until U2 entered commercial operation. U1 components were covered by TI-100.006 prior to U2 commercial operation. This procedure now covers all components in the U1 and U2 IST Programs.

1.4 Owner Information and Interval Dates

Pertinent Owner information and dates are provided in the table below.

Owner	Tennessee Valley Authority	
Address of Corporate Office	Chattanooga Office Complex 1101 Market St. Chattanooga, TN 37402-2801	
Name and Address of Power Plant	Watt Bar Nuclear Plant P.O. Box 2000 Spring City, TN 37381-2000	
Applicable Nuclear Power Units	**WBN Unit 1**	**WBN Unit 2**
Construction Permit Date	January 23, 1973	January 23, 1973
Commercial Operation Date	May 27, 1996	October 19, 2016
First 10 year IST Interval	May 27, 1996 to May 26, 2007	October 19, 2016 to October 18, 2026
Second 10 year IST Interval	May 27, 2007 to October 18, 2016[1]	--
Third 10 year IST Interval	October 19, 2016[1] to October 18, 2026[1]	--

1. The Second 10 Year IST Interval for U1 is being adjusted to coincide with the start of the First 10 Year IST Interval for U2 (date of initial commercial operation). This interval adjustment is in accordance with OM Code, Subsection ISTA-3120(d) as shown below.

   The first 10 year interval for Unit 1 was 132 months (11 years) and the second 10 year interval was approximately months 113 months (9 years 5 months). The original interval schedule of 120 months (10 years) per interval would have started the Unit 1 third 10 year interval after 240 months (20 years) from the date of initial commercial operation whereas the actual start is approximately 245 months (20 years, 5 months). The time frame allowed by ISTA-3120(d) for start of the Unit 1 third 10 year interval is from 228 months (19 years) to 252 months (21 years) from the date of initial commercial operation.

1.5 Regulatory Requirements and WBN Compliance

1.5.1 Code of Record

IST Period (Unit 1 and Unit 2)

Licensees of pressurized water reactors are required by 10CFR50.55a(f) and (g) to establish an IST Program for their initial 120 month (10 year) interval based on the requirements of the latest edition and addenda of the ASME OM Code incorporated by reference in paragraph 10CFR50.55a(a)(1)(iv) 12 months before issuance of an operating license. At the end of this initial interval, and each succeeding interval, they must revise their IST Program to comply with the requirements of the latest edition and addenda of the ASME OM Code incorporated by reference in paragraph 10CFR50.55a(a)(1)(iv) 12 months before the start of the 120 month interval, subject to the conditions listed 10CFR50.55a(b).

Watts Bar Unit 1 updated its IST Interval effective on the date of Unit 2 commercial operation in order to be on a concurrent interval with Unit 2. The code of record for the concurrent U1 and U2 IST intervals is the ASME OM Code, 2004 Edition through 2006 Addenda. The WBN IST Program presented in this procedure complies with the requirements of this code of record.

Preservice Testing (PST) Period (Unit 2 Components Only)

10CFR50.55a does not specifically address requirements for PST of pumps, valves, and pressure relief devices. ASME OM Code, ISTA-3200(f)(1) requires that PST shall comply with the edition and addenda that has been adopted by the regulatory authority 36 months prior to the docket date of the unit's construction permit, or subsequent editions and addenda that have been adopted by the regulatory authority. Specific portions of such subsequent editions and addenda may be used, provided all related requirements are met.

Therefore, the code of record for the PST period of pumps, valves, and pressure relief devices not previously in scope of the U1 IST Program could be either OM Code, 2001 Edition through 2003 Addenda, or OM Code, 2004 Edition through 2006 Addenda. Procedure SPP-09.1.20 provides a comparison of the difference between these code editions/addenda.

10CFR50.55a provides an option to perform snubber testing in accordance with ASME OM Code (IST) or ASME Boiler and Pressure Vessel Code, Section XI (ISI). The Unit 2 snubbers were included in scope of ASME Section XI for the Preservice Inspection (PSI) period activities.

1.5.2 Conditions Applicable to Code of Record

The applicable conditions of 10CFR50.55a, paragraph (b)(3) are provided below with an explanation of WBN's method of addressing each condition.

A. (b)(3)(i) Quality Assurance

The quality assurance program implemented by WBN is the TVA Nuclear Quality Assurance Program Plan (TVA-NQA-PLN89-A). This program is in accordance with 10CFR50, Appendix B. WBN has elected not to use ASME NQA-1, "Quality Assurance Requirements for Nuclear Facilities," 1979 Addenda.

B. (b)(3)(ii) Motor Operated Valves Testing

Procedure SPP-09.26.14, Motor Operated Valve Program, describes the program used at WBN to ensure that motor operated valves continue to be capable of performing their design basis safety functions.

C. (b)(3)(v) Subsection ISTD

The conditions of paragraph (b)(3) and its subparagraphs (b)(3)(v)(A) and (b)(3)(v)(B) for snubbers are incorporated into the WBN preservice and inservice programs for snubbers contained in WBN-2 PSI (U2 preservice inspection) and 0-TI-203 (U1 and U2 snubber program).

1.5.3 Code Cases

In accordance with 10CFR50.55a, paragraph (b)(6), code cases referenced in Regulatory Guide (RG) 1.192, "Operation and Maintenance Code Case Acceptability, ASME OM Code," may be used without prior NRC approval subject to the requirements of (b)(6)(i) through (b)(6)(iii). However, at this time, TVA has not elected to adopt any of the code cases approved for use in RG 1.192 for WBN 1 and 2.

1.5.4 Requests for Relief

In accordance with 10CFR50.55a, paragraphs (f)(6)(i), (z)(1), and (z)(2), licensees may submit a request for relief from code requirements. WBN has submitted six U2 relief requests and three U1 relief requests to the NRC for review and all have been approved. The three U1 relief requests (IST-RR-1, 2, and 3) are duplicated in the six U2 relief requests. The U1 versions were submitted and approved after the U2 versions were approved (except for the U2 snubber relief request (IST-RR-6). Because there were changes made to the U1 version of IST-RR-2, that version is included in this document. There were no changes made to the other two common relief requests (IST-RR-1, and 3). All six relief requests are contained in Appendix C, Pump Relief Requests, Appendix D, Valve Relief Requests, and Appendix G, Snubber Relief Requests.

1.5.5 IST Program Scope Technical Position

IST Program Scope Technical Position is provided in Appendix G of 0-TI-100.011, Inservice Testing Program Basis Document, to document WBN's method for determination of which components are in the scope of the IST program.

1.5.6 NUREG-1482

The NRC published NUREG-1482, “Guidelines for Inservice Testing at Nuclear Power Plants,” to provide guidance and recommendations for developing and implementing IST Programs. Guidance provided was used in the development of the WBN IST Program where applicable.

2.0 REFERENCES

A. Code of Federal Regulations, Title 10, Part 50.55a

B. ASME OM Code, Code for Operation and Maintenance of Nuclear Power Plants, 2004 Edition through 2006 Addenda

C. NUREG-1482, Revision 2, Guidelines for Inservice Testing at Nuclear Power Plants

D. Regulatory Guide 1.192, Operation and Maintenance Code Case Applicability, ASME OM Code

E. Regulatory Guide 1.193, ASME Code Cases Not Approved For Use

F. ASME OM Code Interpretation 98-8

G. ASME OM Code Interpretation 01-1

H. TVA-NQA-PLN89-A, TVA Nuclear Quality Assurance Program Plan

I. NPG-SPP-09.1, ASME Code and Augmented Programs

J. NPG-SPP-09.1.20, Inservice Testing Program Requirements

K. NPG-SPP-09.1.21 Inservice Testing Program Evaluations and Reference Values

L. NPG-SPP-09.1.22, Inservice Testing Program Trending Requirements

M. NPG-SPP-09.1.23, Inservice Testing Program Preconditioning Guidelines

N. NPG-SPP-09.1.24, Inservice Testing of Pressure Relief Devices

2.0 REFERENCES (Continued)

O. NPG-SPP-09.1.25, IST Program Check Valve Condition Monitoring Requirements

P. NPG-SPP-09.26.14, Motor Operated Valve Program

Q. WBN Technical Specifications/Technical Requirements Manuals Unit 1 and Unit 2

R. WBN Final Safety Analysis Report, Section 3.9.6

S. TI-100.006, Inservice Testing Program (superseded by 0-TI-100.006)

T. 1-TRI-0-10.2, ASME Section XI ISI/NDE Program

U. 1-TRI-0-10.3, ASME Section XI ISI/NDE Program

V. WBN-2 PSI, Preservice Inspection Program Plan

W. 2-TRI-0-10.1, ASME Section XI ISI/NDE Program

X. TI-360.01, WBN Containment Leak Rate Programs

Y. 2-TI-360.01, WBN Containment Leak Rate Programs

Z. 0-TI-100.011, Inservice Testing Program Bases Document

AA. TI-100.008, Inservice and Augmented Inservice Testing and System Pressure Test Program Implementation Matrix

AB. 2-TI-100.008, Unit 2 Inservice and Augmented Inservice testing and System Pressure Test Program Implementation Matrix

AC. 0-TI-100.013, Check Valve Condition Monitoring Program

AD. 0-TI-100.007, Augmented Inservice Testing Program

AE. 0-TI-100.016, Augmented Inservice Testing Program Bases Document

AF. 1-SI-0-902, Inservice Testing of Safety and Relief Valves

AG. 2-SI-0-902, Unit 2 Inservice Testing of Safety and Relief Valves

2.0 REFERENCES (Continued)

AH. 1-SI-1-907, Testing and Setpoint Adjustment of Man Steam Safety Valves Using Trevitest Equipment

AI. 2-SI-1-907, Unit 2 Testing and Setpoint Adjustment of Man Steam Safety Valves Using Trevitest Equipment

AJ. 1-SI-0-911, Periodic Thermal Relief Valve Replacement

AK. 2-SI-0-911, Unit 2 Periodic Replacement of Thermal Relief Valves

AL. TI-203, Snubber Program (superseded by 0-TI-203)

AM. 0-TI-203, Snubber Program

AN. 47B21-1 & -1A, Mechanical Piping Systems Classification

AO. NUREG-0847 Supplement 23, Safety Evaluation Report Related to the Operation of Watts Bar Nuclear Plant, Unit 2

AP. Letter from Jessie Quichocho to Joseph Shea dated October 21, 2014 with attached SER approving Relief Requests IST-RR-1/2/3/4 for the First 10-Year Interval of the Unit 2 Inservice Testing Program (TAC No. MF4118)

AQ. Letter from Benjamin Beasley to Joseph Shea dated March 10, 2016 with attached SER approving Relief Requests IST-RR-1/2/3 for the Third 10-Year Interval of the Unit 1 Inservice Testing Program (CAC No. MF6191)

AR. Letter from Benjamin Beasley to Joseph Shea dated April 6, 2016 with attached SER approving Relief Request IST-RR-5 for the First 10-Year Interval of the Unit 2 Inservice Testing Program (CAC No. MF7396)

AS. Letter from Benjamin Beasley to Joseph Shea dated April 5, 2016 with attached SER approving Relief Request WBN-2/PSI for the First 10-Year Interval of the Unit 2 Inservice Testing Program (CAC No. MF7447)

3.0 PROGRAM DEVELOPMENT

3.1 Development of Program Scope

The methodology used to develop the scope for the WBN IST Program is described below.

A. TVA upper tier procedures NPG-SPP-09.1 and NPG-SPP-09.1.20 series were used in development of the WBN IST Program.

B. In accordance with 10CFR50.55a, paragraph (f), the consideration for scope of the IST Program was limited to Code Class 1, 2, and 3 components. There are no Code Class MC pumps, valves, pressure relief devices, or snubbers at WBN.

C. TVA uses an alphabetical classification to correlate ASME Code Class to an ASME Code Class equivalent. The term "ASME Code Class equivalent" is used because the Browns Ferry and Sequoyah plants were not designed or built using ASME Section III, and a method was needed to comply with 10CFR50 requirements for inservice testing. Watts Bar was the first TVA plant which was designed and constructed in accordance with ASME Section III. For WBN the alphabetical equivalency is also used, but the components were actually designed and built as ASME components (with exceptions for components which could not be obtained as ASME components). The correlation is shown below.

ASME Code Class	TVA ASME Code Class Equivalent
1	A
2	B
3	C, D

D. The WBN drawings listed in Section 3.2 were used to identify the Code Class 1, 2, and 3 components. The drawings indicate the Code Class equivalent (A, B, C or D) rather than the actual ASME Code Class.

E. The Final Safety Analysis Report, Technical Specifications and Bases (Unit 1 and 2), and all System Description Documents (SDDs) were reviewed to determine the nuclear safety related functions credited at WBN.

F. The function(s) of each component within the Code Class 1, 2, and 3 boundaries shown on the system drawings were reviewed. Based on this review, each component was determined to be “in scope” or “exempt from scope” of the Code of Record (ASME OM Code, 2004 Edition through 2006 Addenda). The component functions and scope determination are documented in 0-TI-100.011, Inservice Testing Program Bases Document.

3.1 Development of Program Scope (Continued)

G. Pumps, valves, pressure relief devices, and snubbers in scope of the IST Program are shown in Appendix A, Pump Test Plan; Appendix B, Valve Test Plan; and Appendix F, Snubber Test Plan. An explanation of the abbreviations used in these appendices is provided in Section 3.4, Section 3.5, and Section 3.6.

3.2 Applicable Drawings and System Descriptions

The table below provides a list of the systems in scope of the PST/IST Program along with the applicable drawings and SDDs used in development of the program scope.

System No	System Name	Applicable System Description Document	Applicable Drawing
01	Main Steam	N3-1-4002	1 & 2-47W801-1 1 & 2-47W801-2 47W600 & 1/2-47W600 series
03A	Main Feedwater	N3-3A-4002	1 & 2-47W803-1 47W600 & 2-47W600 series
03B	Auxiliary Feedwater	N3-3B-4002	0-47W803-2 1 & 2-47W803-3 47W600 & 2-47W600 series
15	Steam Generator Blowdown	N3-15-4002	1 & 2-47W801-2
18	Diesel Fuel Oil	N3-82-4002	0-47W840-1, 1A, 4, 5 2-47W840-1B 47W600 & 1-47W600 series
26	High Pressure Fire Protection	N3-26-4002	0-47W832-1, 2 0-47W850-2 1 & 2-47W850-9 47W600 series
30	Ventilation	N3-30RB-4002	1 & 2-47W866-1 47W600 & 2-47W600 series
31	Chilled Water	N3-30AB-4001 N3-30CB-4002 N3-30RB-4002	0-47W865-3, 7, 8, 12 1 & 2-47W865-5, 6 47W600 & 2-47W600 series
32	Compressed Air	N3-32-4002	1-47W830-12 0-47W848-1, 5, 10 47W600 series
33	Service Air	N3-32-4002	0-47W846-2

3.2 Applicable Drawings and System Descriptions (Continued)

System No	System Name	Applicable System Description Document	Applicable Drawing
43	Sampling and Water Quality System	N3-43-4001 N3-83-4001	1 & 2-47W625-1, 2, 3 0-47W625-4, 5 1 & 2-47W625-7 0-47W625-8, 9 1 & 2-47W625-11 0-47W625-12 1 & 2-47W625-15 1 & 2-47W625-22, 23 0-47W625-24, 25
52	Loose Parts Monitoring System	N/A	47W331-3 2-47W331-3
59	Demineralized Water System	N/A	0-47W856-1
61	Ice Condenser System	N3-61-4001	1 & 2-47W814-2
62	Chemical and Volume Control	N3-62-4001	1 & 2-47W809-1, 2, 1-47W809-6, 6A 0-47W809-3, 4, 5, 7, 9 47W600 & 1/2-47W600 series
63	Safety Injection	N3-63-4001	1 & 2-47W811-1 47W600 & 2-47W600 series
65	Emergency Gas Treatment	N3-65-4001	47W600 & 2-47W600 series
67	Essential Raw Cooling Water	N3-67-4002	0-47W845-1, 2, 5 1 & 2-47W845-3 1-47W845-4 2-47W845-7 47W600 & 2-47W600 series
68	Reactor Coolant	N3-68-4001	0-47W625-8 1 & 2-47W813-1 0-47W830-6 47W600 & 1/2-47W600 series
70	Component Cooling	N3-70-4002	0-47W859-1, 4 1-47W859-2 2-47W859-3 47W600 & 2-47W600 series
72	Containment Spray	N3-72-4001	1 & 2-47W812-1 47W600 & 2-47W600 series
74	Residual Heat Removal	N3-74-4001	1 & 2-47W810-1 47W600 & 2-47W600 series

3.2 Applicable Drawings and System Descriptions (Continued)

System No	System Name	Applicable System Description Document	Applicable Drawing
77	Gaseous Waste Disposal Liquid Waste Disposal	N3-77A-4001 N3-77C-4001	0-47W830-1, 1A, 3, 4, 6, 6A 1-47W830-12 1 & 2-47W851-1 47W600 series
78	Spent Fuel Pool Cooling and Cleaning	N3-78-4001	0-47W855-1 47W600 series
81	Primary Makeup Water System	N3-81-4001	0-47W819-1
82	Diesel Starting Air Diesel Lube Oil Diesel Cooling Water	N3-82-4002	1-47W839-1, 1A 2-47W839-1B, 1C 1-47W880-1, 2 2-47W880-3, 4 1-47W881-1, 2 2-47W881-3, 4 47W600 & 1-47W600 series
84	Flood Mode Boration Makeup	N3-84-4001	0-47W809-7 47W600 & 2-47W600 series
90	Radiation Monitoring System	N/A	1 & 2-47W610-90-3 47W600 & 2-47W600 series

3.3 Development of Component Test Requirements

The methodology used to determine test requirements for components in scope of the WBN IST Program is described below.

A. Each component in scope of the program was categorized in accordance with OM Code, ISTB-1300, ISTC-1300, and ISTD-4220 (SPP-09.1.20).

B. The test requirements for each pump were determined in accordance with OM Code, Table ISTB-3000-1, ISTB-3100 (SPP-09.1.20), ISTB-3200 (SPP-09.1.20), and ISTB-3400 (SPP-09.1.20) as applicable for the pump group.

C. The test requirements for each valve and pressure relief device were determined in accordance with OM Code, Table ISTC-3500-1, ISTC-3100 (SPP-09.1.20), ISTC-3200 (SPP-09.1.20), and ISTC 3510 (SPP-09.1.20).

D. The examination, test, and monitoring requirements for each snubber were determined in accordance with OM Code, ISTD-4000, ISTD-5000, and ISTD-6000 (SPP-09.1.20).

E. In cases where it is not practicable to perform valve testing on a quarterly frequency, an alternative test frequency is selected in accordance with the OM Code for deferring valve test frequency.

F. In cases where it is not practicable to perform testing in accordance with the OM Code, a request for relief from the code requirements is submitted to NRC for approval. A copy of the relief requests is provided in Appendix C, Pump Relief Requests, Appendix D, Valve Relief Requests, and Appendix G, Snubber Relief Requests.

G. The specific inservice test requirements (test type and frequency) for pumps, valves, pressure relief devices, and snubbers in scope of the IST Program are shown in Appendix A, Pump Test Plan; Appendix B, Valve Test Plan; and Appendix F, Snubber Test Plan. An explanation of the abbreviations used in these appendices is provided in Section 3.4, Section 3.5, and Section 3.6.

   Specific information regarding test frequency deferrals are provided in Appendix E, Deferred Test Justifications. The Notes column of Appendix A, Pump Test Plan; and Appendix B, Valve Test Plan, provides reference to the applicable relief request or deferred test justification.

H. The preservice test requirements for U2 valves and pressure relief devices were the first performance of the inservice tests listed in Appendix B. The preservice test requirement for U2 pumps is not the same as the inservice test requirements listed in Appendix A. The preservice test establishes a five point pump curve and initial reference values as described in SPP-09.1.20. The preservice pump test is not listed in Appendix A because it is a one time only test for each pump.

3.4 Description of Appendix A, Pump Test Plan

Appendix A, Pump Test Plan, provides a complete list of all pumps in scope of the IST Program along with pertinent information such as the associated test requirements and test frequency.

A description of each column heading in Appendix A, Pump Test Plan, along with the meaning of abbreviations used therein is provided below:

A. Pump ID

The pump identification is a shortened version of the TVA UNID as shown in Maximo. Specifically, the pump identification is the TVA UNID with the plant designator (WBN) and leading zeros removed. Maximo is TVA's official master equipment list.

B. Function

Function description of the component as shown in Maximo.

C. Drawing

The applicable drawing where the pump is shown.

D. Group

Pump group as defined in OM Code, Subsection ISTB.

Group	
Abbreviation	**Description**
A	Pumps that are operated continuously or routinely during normal operation, cold shutdown, or refueling operations.
B	Pumps in standby systems that are not operated routinely except for testing.

3.4 Description of Appendix A, Pump Test Plan (Continued)

E. Class

Identifies the Code Class classification of the pump as shown on the applicable system flow drawings.

Class	
Abbreviation	**Description**
1	Code Class 1
2	Code Class 2
3	Code Class 3

F. Type

Description
Centrifugal Horizontal - pump and driver are on a horizontal plane (i.e. C-H)
Centrifugal Vertical - pump and driver are on a vertical plane (i.e. C-V)
Vertical Line Shaft pump - a vertically suspended pump where the pump driver and pump element are connected by a line shaft within an enclosed column (i.e. VLS)

G. Fixed or Var

Fixed or Var	
Abbreviation	**Description**
Fixed	Pump speed is fixed
Var	Pump speed is variable

H. Actual Speed

Actual Speed	
Abbreviation	**Description**
GE600	Pump speed is greater than or equal to 600 rpm
LT600	Pump speed is less than 600 rpm

3.4 Description of Appendix A, Pump Test Plan (Continued)

I. Test Req

Identifies specific pump test parameters required to be tested.

Test Req	
Abbreviation	**Description**
dP	Pump differential pressure
Q	Pump flow
N	Pump speed
V	Pump vibration. The actual number of vibration points varies from pump to pump depending on the pump design configuration. The actual pump vibration points and locations are identified in the procedures which test the pumps.

J. Freq

Identifies the test frequency of the associated pump test.

Freq	
Abbreviation	**Description**
2Y	2 Year - this frequency is used for the comprehensive pump test
Q	Quarterly - this frequency is used for the Group A or Group B pump test

K. Procedure

Identifies the procedure(s) used to perform the associated pump test. The procedures are currently listed in TI-100.008 (U1) and 2-TI-100.008 (U2) and will be migrated to this procedure over time. The listings are for information only and are subject to change.

L. Notes

Identifies additional pertinent information as applicable. C* designation in the Notes column indicates the pump is Vendor Supplied Safety Related Equipment or included in a limited QA Program that requires testing in accordance with IST. See 47B21-1, 47B21-1A, and applicable System Description for details.

3.5 Description of Appendix B, Valve Test Plan

Appendix B, Valve Test Plan, provides a complete list of all valves in scope of the IST Program along with pertinent information such as the associated test requirements and test frequency.

A description of each column in Appendix B, Valve Test Plan, along with the meaning of abbreviations used therein is provided below:

A. Valve ID

The valve identification is a shortened version of the TVA UNID as shown in Maximo. Specifically, the valve identification is the TVA UNID with the plant designator (WBN) and leading zeros removed. Maximo is TVA's official master equipment list.

B. Function

Function description of the component as shown in Maximo.

C. Drawing / Coord

The applicable drawing and drawing coordinate where the valve is shown.

3.5 Description of Appendix B, Valve Test Plan (Continued)

D. Cat

Valve category as defined in OM Code, Subsection ISTC

Cat	
Abbreviation	**Description**
A	Valves for which seat leakage is limited to a specific maximum amount in the closed position for fulfillment of their required function(s), as specified in ISTA-1100.
A/C	Valves which share the characteristics of both Category A and Category C valves.
B	Valves for which seat leakage in the closed position is inconsequential for fulfillment of the required function(s), as specified in ISTA-1100.
C	Valves that are self-actuating in response to some system characteristic, such as pressure (relief valves) or flow direction (check valves) for fulfillment of the required function(s), as specified in ISTA-1100.

E. Act / Pass

Designates whether the valve performs an active or passive safety function.

Act / Pass	
Abbreviation	**Description**
ACT	Valves that are required to change obturator position to accomplish a specific function in shutting down a reactor to the safe shutdown condition, maintaining the safe shutdown condition, or mitigating the consequences of an accident.
PASS	Valves that maintain obturator position and are not required to change obturator position to accomplish the required function(s) in shutting down a reactor to the safe shutdown condition, maintaining the safe shutdown condition, or mitigating the consequences of an accident.

3.5 Description of Appendix B, Valve Test Plan (Continued)

F. Class

Identifies the Code Class classification of the valve as shown on the applicable system flow drawings.

Class	
Abbreviation	**Description**
1	Code Class 1
2	Code Class 2
3	Code Class 3

G. Size

Nominal valve size in inches.

H. Type

Type	
Abbreviation	**Description**
ANG	Angle valve
BA	Ball valve
BF	Butterfly valve
CK	Check valve
CTV	Control Valve
DIA	Diaphragm valve
GA	Gate valve
GL	Globe valve
PLG	Plug valve
RV	Relief valve
TRV	Thermal relief valve

3.5 Description of Appendix B, Valve Test Plan (Continued)

I. Act

Act	
Abbreviation	**Description**
AO	Air operator
HO	Hydraulic actuator
M	Manual actuator
MO	Motor operator
SA	Self actuated valve
SO	Solenoid actuator

J. Position - Norm

Position(s) of the valve when performing its normal operating function.

Norm	
Abbreviation	**Description**
C	Closed
LC	Locked closed
LO	Locked open
PO	Partially Open
O	Open
O/C	Open / Closed
TH	Throttled

K. Position - Safe

Position(s) of the valve when performing its safety related function.

Safe	
Abbreviation	**Description**
C	Closed
O	Open
O/C	Open / Closed

3.5 Description of Appendix B, Valve Test Plan (Continued)

L. Position - Fail

Fail	
Abbreviation	**Description**
O	Open
C	Closed
FAI	Fail as is
N/A	No fail position (valve does not have motive power to fail)

M. Test Req

Identifies specific valve tests required to be performed.

Test Req	
Abbreviation	**Description**
BDC	Bi-Direction Close test. A close exercise test method for check valves that do not perform a safety function in the closed position.
BDO	Bi-Direction Open test. The open exercise test method for check valves that do not perform a safety function in the open position. This test only requires the valve to be exercised to the partially open position.
CM	Condition Monitoring test. This test type is shown for those check valves that are tested in accordance with the Check Valve Condition Monitoring Program as described and controlled in 0-TI-100.013.
CVC	Check Valve Close exercise test. The close exercise test method for check valves that perform a safety function in the closed position. This test method verifies the obturator travels to the seat.
CVO	Check Valve Open exercise test. The open exercise test method for check valves that perform a safety function in the open position. This test method verifies the obturator travels to the full open position (e.g. disc on backstop) or position required to fulfill its safety function (e.g. passes maximum accident flow rate).
ET	Exercise Test. Test method where a valve is full stroke exercised open and closed but stroke timing is not performed.
FSC	Fail Safe Close test. Test method for valves that have an actuator that causes the valve to fail in the closed position. This test method verifies the valve travels to the closed position upon loss of valve actuating power.

3.5 Description of Appendix B, Valve Test Plan (Continued)

M. Test Req (Continued)

Test Req	
Abbreviation	**Description**
FSO	Fail Safe Open test. Test method for valves that have an actuator that causes the valve to fail in the open position. This test method verifies the valve travels to the open position upon loss of valve actuating power.
LTJ	Seat leakage test in accordance with 10CFR50, App. J. This test type is shown for containment isolation valves that are leak tested in accordance with the requirements of WBN's 10CFR50, Appendix J, Containment Leak Rate Program (TI-360.01 for U1 and 2-TI-360.01 for U2). There are no specific IST related requirements for this test type. It is provided for reference purposes only.
LTP	Seat leakage test for Pressure Isolataion Valve (PIV). Test method for those valves that have a specific leakage rate based on the PIV function. This test method verifies the leakage rate of the valves is within Owner specified limits.
LT	Seat leakage test for reasons other than 10CFR50, App. J or PIV seat leakage. Test method for those valves that have a specific leakage rate based on requirements other than 10CFR50, App. J or PIVs. This test method verifies the leakage rate of the valves is within Owner specified limits.
MS	Manual Stroke test. Test method for manual valves. This test full stroke exercises the valve using the manual actuator.
NTR	No Test Required. This test designator is used for those valves in which no test is required. Typically, this test designator is applicable to Category B Passive valves which are not equipped with remote position indication.
PSO	Part Stroke Open test. Test method for power operated valves which perform a safety function in the partially open position. This test performs a partial stroke exercise from closed or partially open to a partially open position and measures the stroke time to the partially open position.
RPI	Remote Position Indication test. Test method for valves that are equipped with remote position indication. This test verifies the indicating lights accurately reflect actual valve position. In most cases, this test is performed by local observation of valve travel as compared to indication lights. Other methods include verification of a change in flow, pressure, temperature, etc. relative to valve obturator position as compared to indicating lights.

3.5 Description of Appendix B, Valve Test Plan (Continued)

M. Test Req (Continued)

RRA	Relief Request Activities. Special activities (e.g., maintenance activities) to be performed for compliance with an approved relief request.
RV	Relief Valve test. This test method verifies relief valves lift at their specified setpoint (within Owner specified criteria) and verifies other parameters as described and controlled in the Relief Valve Program (1/2-SI-0-902, 1/2-SI-1-907, and 1/2-SI-0-911).
STC	Stroke Time Close test. Test method for power operated valves which perform a safety function in the closed position. This test performs a full stroke exercise from open to closed and measures the stroke time closed.
STO	Stroke Time Open test. Test method for power operated valves which perform a safety function in the open position. This test performs a full stroke exercise from closed to open and measures the stroke time open.

N. Freq

Identifies the test frequency of the associated valve test.

Freq	
Abbreviation	**Description**
2Y	2 Year
10Y	10 Years
AppJ	Frequency determined and controlled by the 10CFR50, Appendix J, Containment Leak Rate Program (TI-360.01 for U1 and 2-TI-360.01 for U2).
CM	Frequency determined and controlled by the Check Valve Condition Monitoring Program (0-TI-100.013).
CSD	Cold Shutdown
NTR	Frequency assigned to the NTR test type in which no testing is required.
Q	Quarterly
RO	Refueling Outage
RV	Frequency determined and controlled by the Relief Valve Program (1/2-SI-0-902, 1/2-SI-1-907, and 1/2-SI-0-911).

3.5 Description of Appendix B, Valve Test Plan (Continued)

O. Procedures

Identifies the procedure(s) used to perform the associated valve test. The procedures are currently listed in TI-100.008 (U1) and 2-TI-100.008 (U2) and will be migrated to this procedure over time. The listings are for information only and are subject to change.

P. Notes

Identifies pertinent information such as reference to the Deferred Test Justification (Appendix E) associated with a specific test. C* designation in the Notes column indicates the valve is Vendor Supplied Safety Related Equipment or included in a limited QA Program that requires testing in accordance with IST. See 47B21-1, 47B21-1A, and applicable System Description for details.

3.6 Description of Appendix F, Snubber Test Plan

Appendix F, Snubber Test Plan, provides a complete list of all snubbers in scope of the IST Program along with pertinent information such as the snubber identification, manufacturer, model, and size. Specific snubber test requirements are not listed in Appendix F because the requirements are identical for each component.

A description of each column heading in Appendix F, Snubber Test Plan, along with the meaning of abbreviations used therein is provided below:

A. Component ID

The snubber identification is a shortened version of the TVA UNID as shown in Maximo. Specifically, the snubber identification is the TVA UNID with the plant designator (WBN) and leading zeros removed. Maximo is TVA's official master equipment list.

B. Support ID

Identification of the associated support / hanger. This information is provided to assist in location of the snubber and provide a link to the support portion which is in scope of the ISI Program.

C. Mark No

Same as Support ID.

D. ISO Dwg

Drawing showing the snubber in relation to the piping system it supports.

E. Support Dwg

Not used.

F. Class

ASME Code Class of the piping the snubber is supporting.

G. System

Three digit number designation of the piping system the snubber is supporting.

3.6 Description of Appendix F, Snubber Test Plan (Continued)

H. Type

Description
Mechanical
Hydraulic

I. Mfg

Manufacturer of the snubber

J. Model

Manufacturer's model number of the snubber

K. DTPG

Defined Test Plan Group assigned to the snubber

L. Plan

Plan assigned to the snubber (Safety related or non-safety related).

4.0 STRUCTURE OF PRESERVICE/INSERVICE TESTING PROGRAM REQUIREMENTS

The diagram below provides a graphic representation of the hierarchy and structure of various regulations and requirements related to the WBN PST/IST Program. The relationships depicted in this diagram are described in the following subsections.

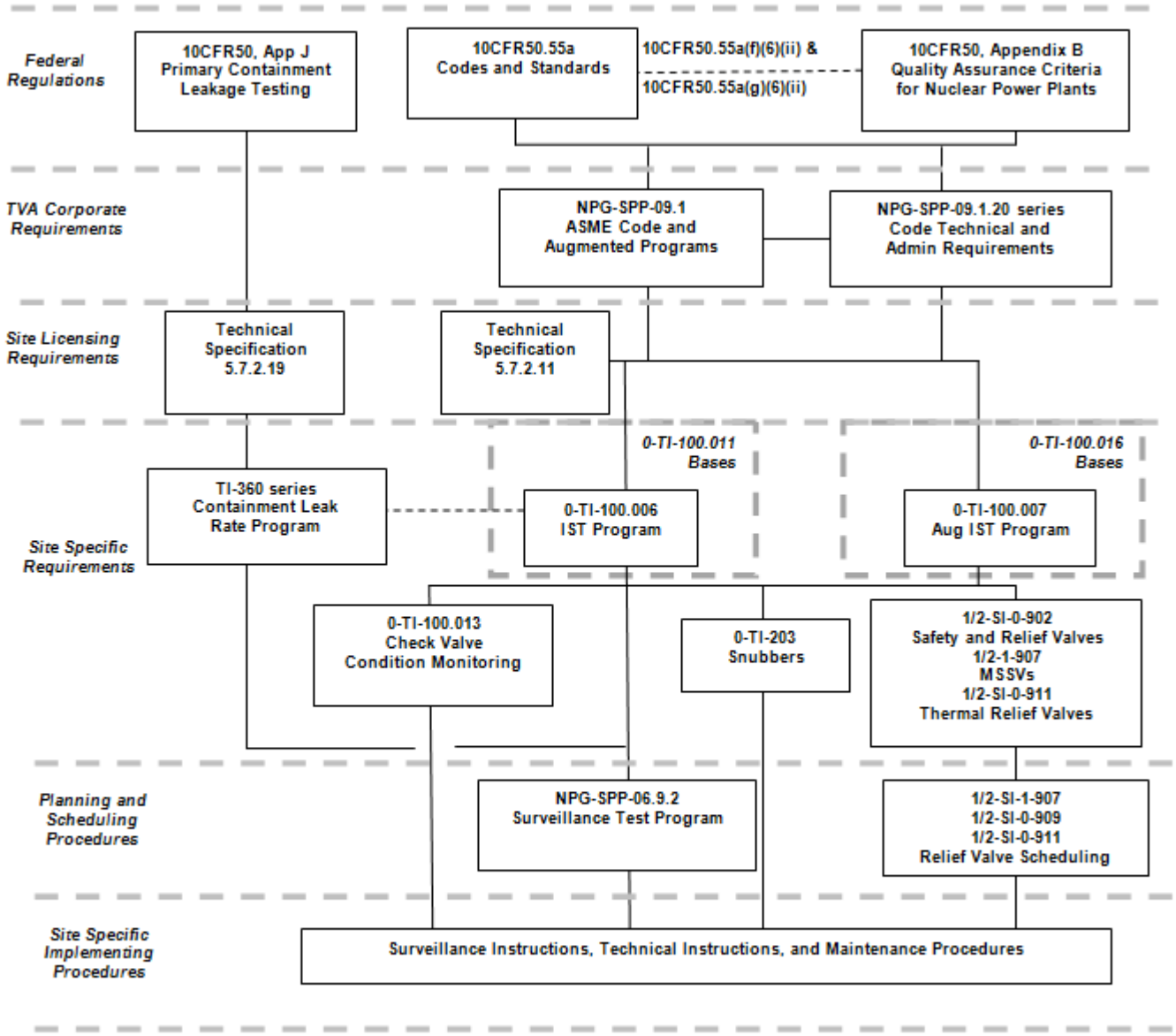

4.1 Upper Tier Requirements for IST Program Scope and Content

10CFR50.55a requires each licensee of a pressurized water-cooled nuclear power plant to periodically update their IST Program to ensure pumps, valves, pressure relief devices, and snubbers which are classified as Code Class 1, 2, and 3 meet the test requirements of the ASME OM Code edition and addenda incorporated by reference. Section 1.5 of this procedure provides the necessary specific information. It is important to note that 10CFR50.55a restricts the scope of IST Program to include only those Class 1, 2, and 3 components in scope of the ASME OM Code.

TVA corporate fleet-wide procedure NPG-SPP-09.1 provides the TVA process for compliance with 10CFR50.55a.

The following TVA corporate fleet-wide procedures provide the TVA procedure equivalent of the OM Code applicable to the WBN IST Program. Content of the IST Program (e.g., test type, test frequency, pump and valve test plan tables, test deferral justifications, etc.) was developed in accordance with these procedures.

Procedure	Description
SPP-09.1.20	Procedure eqivalent of OM Code, Subsections: ISTA - General Requirements ISTB - Pumps ISTC - Valves ISTD - Snubbers
SPP-09.1.21	This procedure addresses specific requirements in SPP-09.1.20 (OM Code Subsections ISTB and ISTC) related to reference values and acceptance criteria. It provides the technical and administrative process for performing component evaluations and establishing new reference valves and associated acceptance criteria.
SPP-09.1.22	This procedure addresses specific requirements in SPP-09.1.20 (OM Code Subsections ISTB and ISTC) related to component trending. It provides the requirements for periodic performance trending.
SPP-09.1.23	Provides requirements for evaluation of potential preconditioning activities affecting IST required tests.
SPP-09.1.24	Procedure eqivalent of OM Code, Appendix I - Pressure Relief Devices. This procedure also provides requirements for administration of the IST Pressure Relief Device Program as discussed in Section 4.2.1.
SPP-09.1.25	Procedure eqivalent of OM Code, Appendix II - Check Valve Condition Monitoring Program. This procedure also provides requirements for administration of the IST Check Valve Condition Monitoring Program as dicussed in Section 4.2.2.

These procedures should be used in lieu of direct reference to OM Code where possible because they represent TVA's official position for OM Code meaning and implementation requirements. These procedures have been developed to ensure consistent interpretation and implementation of the OM Code requirements at all TVA nuclear plants.

4.2 Administration and Implementation of the IST Program

TVA fleet-wide procedures SPP-09.1.20 through SPP-09.1.25 provide specific processes for administration of the IST Program. This includes day-to-day activities such as:

A. Evaluation of components which have undergone maintenance and development of new reference values and acceptance criteria (SPP-09.1.21).

B. Performing periodic trending of component performance (SPP-09.1.22).

C. Performing periodic review of online and outage schedules for activities which could lead to unacceptable preconditioning (SPP-09.1.23).

Implementation of the WBN IST Program is accomplished by performance of site specific test procedures developed to satisfy the specific component tests identified in Appendix A, B, and F of this procedure. These implementing procedures are also listed in the appendices where possible. Scheduling of the implementing test procedures is controlled by procedure NPG-SPP-06.9.2. Exceptions to this implementation method are described below.

The WBN IST Program is supplemented by three sub-programs: a) IST Pressure Relief Device Program; b) Check Valve Condition Monitoring Program, and c) Snubber Program. This approach was taken because these components in these sub-programs have unique test types and test frequencies based on groups of similar components (e.g., design type, service conditions, performance history, etc) rather than an individual component's categorization. Accordingly, Appendix B, Valve Test Plan, of this procedure identifies the test type and test frequency for valves included in the sub-programs in general terms such as CM for reference to the Check Valve Condition Monitoring Program and RV for reference to the IST Pressure Relief Device Program. Additional information regarding each of these sub-programs is provided in Sections 4.2.1 and 4.2.2. Appendix F, Snubber Test Plan, provides the scope of snubbers in the plan and the associated test requirements are described in Section 4.2.3.

4.2.1 IST Pressure Relief Device Program

Technical and administrative requirements for the IST Pressure Relief Device Program are delineated in SPP-09.1.24.

The IST Pressure Relief Device Program is described in procedures 1-SI-0-902 and 2-SI-0-902 for safety and relief valves; 1-SI-1-907 and 2-SI-1-907 for MSSVs; and 1-SI-0-911 and 2-SI-0-911 for thermal relief valves. These procedures provide a list of the valve groups, valves in each group, and the test frequency for each valve and valve group.

4.2.2 Check Valve Condition Monitoring Program

Technical and administrative requirements for the Check Valve Condition Monitoring Program are delineated in SPP-09.1.25.

The Check Valve Condition Monitoring Program is described in procedure 0-TI-100.013. This procedure provides a list of the valve groups, valves in each group, condition monitoring activities (e.g., tests, examinations) and frequency for each valve group, and reference to the evaluation prepared to substantiate the condition monitoring activities (Condition Monitoring Plan). As described in 0-TI-100.013 reviews of check valve testing activities associated with condition monitoring should be scheduled and performed.

Should a required change to check valve condition monitoring activities conflict with plant Technical Specifications (TS) a TS amendment must be approved in accordance with 10CFR50.55a(f)(5)(ii) prior to implementation.

4.2.3 Snubber Program

Technical and administrative requirements for the Snubber Program is delineated in SPP-09.1.20. This procedure incorporates the requirements of OM Code, Subsection ISTD.

The Snubber Program is described in procedure 0-TI-203. Procedures 1/2-SI-0-912 provide a list of the snubber Defined Test Plan Group (DTPG) and snubbers in each DTPG.

5.0 RECORDS

This document does not create any records, either QA or non-QA.

Appendix A - Pump Test Plan

PUMP ID	FUNCTION	DRAWING/COOR	GROUP	CLASS	TYPE	FIXED OR VAR.	ACTUAL SPEED	TEST REQ	FREQ	PROCEDURE	NOTES
0-PMP-67-28-A	ESSENTIAL RAW COOLING WATER PUMP A-A	0-47W845-1	A	3	Vertical Line Shaft	Fixed	GE600	dP	2Y		
								Q	2Y		
								V	2Y		IST-RR-1
								dP	Q		
								Q	Q		
								V	Q		IST-RR-1
0-PMP-67-32-A	ESSENTIAL RAW COOLING WATER PUMP B-A	0-47W845-1	A	3	Vertical Line Shaft	Fixed	GE600	dP	2Y		
								Q	2Y		
								V	2Y		IST-RR-1
								dP	Q		
								Q	Q		
								V	Q		IST-RR-1
0-PMP-67-36-A	ESSENTIAL RAW COOLING WATER PUMP C-A	0-47W845-1	A	3	Vertical Line Shaft	Fixed	GE600	dP	2Y		
								Q	2Y		
								V	2Y		IST-RR-1
								dP	Q		
								Q	Q		
								V	Q		IST-RR-1

Appendix A - Pump Test Plan

PUMP ID	FUNCTION	DRAWING/COOR	GROUP	CLASS	TYPE	FIXED OR VAR.	ACTUAL SPEED	TEST REQ	FREQ	PROCEDURE	NOTES
0-PMP-67-40-A	ESSENTIAL RAW COOLING WATER PUMP D-A	0-47W845-1	A	3	Vertical Line Shaft	Fixed	GE600	dP	2Y		
								Q	2Y		
								V	2Y		IST-RR-1
								dP	Q		
								Q	Q		
								V	Q		IST-RR-1
0-PMP-67-47-B	ESSENTIAL RAW COOLING WATER PUMP E-B	0-47W845-1	A	3	Vertical Line Shaft	Fixed	GE600	dP	2Y		
								Q	2Y		
								V	2Y		IST-RR-1
								dP	Q		
								Q	Q		
								V	Q		IST-RR-1
0-PMP-67-51-B	ESSENTIAL RAW COOLING WATER PUMP F-B	0-47W845-1	A	3	Vertical Line Shaft	Fixed	GE600	dP	2Y		
								Q	2Y		
								V	2Y		IST-RR-1
								dP	Q		
								Q	Q		
								V	Q		IST-RR-1

Appendix A - Pump Test Plan

PUMP ID	FUNCTION	DRAWING/COOR	GROUP	CLASS	TYPE	FIXED OR VAR.	ACTUAL SPEED	TEST REQ	FREQ	PROCEDURE	NOTES
0-PMP-67-55-B	ESSENTIAL RAW COOLING WATER PUMP G-B	0-47W845-1	A	3	Vertical Line Shaft	Fixed	GE600	dP	2Y		
								Q	2Y		
								V	2Y		IST-RR-1
								dP	Q		
								Q	Q		
								V	Q		IST-RR-1
0-PMP-67-59-B	ESSENTIAL RAW COOLING WATER PUMP H-B	0-47W845-1	A	3	Vertical Line Shaft	Fixed	GE600	dP	2Y		
								Q	2Y		
								V	2Y		IST-RR-1
								dP	Q		
								Q	Q		
								V	Q		IST-RR-1
0-PMP-70-51-S	CCS PUMP C-S	0-47W859-1	A	3	Centrifugal Horizontal	Fixed	GE600	dP	2Y		
								Q	2Y		
								V	2Y		IST-RR-1
								dP	Q		
								Q	Q		
								V	Q		IST-RR-1

Appendix A - Pump Test Plan

PUMP ID	FUNCTION	DRAWING/COOR	GROUP	CLASS	TYPE	FIXED OR VAR.	ACTUAL SPEED	TEST REQ	FREQ	PROCEDURE	NOTES
1-PMP-3-1A-S	TD AUX FEEDWATER PUMP 1A-S	0-47W803-2	B	3	Centrifugal Horizontal	Var	GE600	dP	2Y		
								N	2Y		
								Q	2Y		
								V	2Y		IST-RR-1
								N	Q		
								Q	Q		
								V	Q		IST-RR-1
								dP	Q		
1-PMP-3-118-A	AUX FEEDWATER PMP 1A-A	0-47W803-2	A	3	Centrifugal Horizontal	Fixed	GE600	dP	2Y		
								Q	2Y		
								V	2Y		IST-RR-1
								dP	Q		
								Q	Q		
								V	Q		IST-RR-1
1-PMP-3-128-B	AUX FEEDWATER PMP 1B-B	0-47W803-2	A	3	Centrifugal Horizontal	Fixed	GE600	dP	2Y		
								Q	2Y		
								V	2Y		IST-RR-1
								dP	Q		
								Q	Q		
								V	Q		IST-RR-1

Appendix A - Pump Test Plan

PUMP ID	FUNCTION	DRAWING/COOR	GROUP	CLASS	TYPE	FIXED OR VAR.	ACTUAL SPEED	TEST REQ	FREQ	PROCEDURE	NOTES
1-PMP-62-104-B	CENTRIFUGAL CHARGING PUMP 1B-B	1-47W809-1	A	2	Centrifugal Horizontal	Fixed	GE600	dP	2Y		
								Q	2Y		
								V	2Y		IST-RR-1
								dP	Q		
								Q	Q		
								V	Q		IST-RR-1
1-PMP-62-108-A	CENTRIFUGAL CHARGING PUMP 1A-A	1-47W809-1	A	2	Centrifugal Horizontal	Fixed	GE600	dP	2Y		
								Q	2Y		
								V	2Y		IST-RR-1
								dP	Q		
								Q	Q		
								V	Q		IST-RR-1
1-PMP-62-230-A	BORIC ACID TRANSFER PUMP 1A-A	0-47W809-5	A	3	Centrifugal Horizontal	Fixed	GE600	dP	2Y		
								Q	2Y		
								V	2Y		IST-RR-1
								dP	Q		
								Q	Q		
								V	Q		IST-RR-1

Appendix A - Pump Test Plan

PUMP ID	FUNCTION	DRAWING/COOR	GROUP	CLASS	TYPE	FIXED OR VAR.	ACTUAL SPEED	TEST REQ	FREQ	PROCEDURE	NOTES
1-PMP-62-232-B	BORIC ACID TRANSFER PUMP 1B-B	0-47W809-5	A	3	Centrifugal Horizontal	Fixed	GE600	dP	2Y		
								Q	2Y		
								V	2Y		IST-RR-1
								dP	Q		
								Q	Q		
								V	Q		IST-RR-1
1-PMP-63-10-A	SAFETY INJECTION PUMP 1A-A	1-47W811-1	B	2	Centrifugal Horizontal	Fixed	GE600	dP	2Y		
								Q	2Y		
								V	2Y		IST-RR-1
								dP	Q		
								Q	Q		
								V	Q		IST-RR-1
1-PMP-63-15-B	SAFETY INJECTION PUMP 1B-B	1-47W811-1	B	2	Centrifugal Horizontal	Fixed	GE600	dP	2Y		
								Q	2Y		
								V	2Y		IST-RR-1
								dP	Q		
								Q	Q		
								V	Q		IST-RR-1

Appendix A - Pump Test Plan

PUMP ID	FUNCTION	DRAWING/COOR	GROUP	CLASS	TYPE	FIXED OR VAR.	ACTUAL SPEED	TEST REQ	FREQ	PROCEDURE	NOTES
1-PMP-67-431-A	ERCW SCREEN WASH PUMP 1A-A	0-47W845-1	A	3	Vertical Line Shaft	Fixed	GE600	dP	2Y		
								Q	2Y		IST-RR-2
								V	2Y		IST-RR-1
								dP	Q		
								Q	Q		IST-RR-2
								V	Q		IST-RR-1
1-PMP-67-440-B	ERCW SCREEN WASH PUMP 1B-B	0-47W845-1	A	3	Vertical Line Shaft	Fixed	GE600	dP	2Y		
								Q	2Y		IST-RR-2
								V	2Y		IST-RR-1
								dP	Q		
								Q	Q		IST-RR-2
								V	Q		IST-RR-1
1-PMP-70-38-B	CCS PUMP 1B-B	0-47W859-1	A	3	Centrifugal Horizontal	Fixed	GE600	dP	2Y		
								Q	2Y		
								V	2Y		IST-RR-1
								dP	Q		
								Q	Q		
								V	Q		IST-RR-1

Appendix A - Pump Test Plan

PUMP ID	FUNCTION	DRAWING/COOR	GROUP	CLASS	TYPE	FIXED OR VAR.	ACTUAL SPEED	TEST REQ	FREQ	PROCEDURE	NOTES
1-PMP-70-46-A	CCS PUMP 1A-A	0-47W859-1	A	3	Centrifugal Horizontal	Fixed	GE600	dP	2Y		
								Q	2Y		
								V	2Y		IST-RR-1
								dP	Q		
								Q	Q		
								V	Q		IST-RR-1
1-PMP-72-10-B	CONTAINMENT SPRAY PUMP 1B-B	1-47W812-1	B	2	Centrifugal Horizontal	Fixed	GE600	dP	2Y		
								Q	2Y		
								V	2Y		IST-RR-1
								dP	Q		
								V	Q		IST-RR-1
1-PMP-72-27-A	CONTAINMENT SPRAY PUMP 1A-A	1-47W812-1	B	2	Centrifugal Horizontal	Fixed	GE600	dP	2Y		
								Q	2Y		
								V	2Y		IST-RR-1
								dP	Q		
								V	Q		IST-RR-1
1-PMP-74-10-A	RHR PUMP 1A-A	1-47W810-1	A	2	Centrifugal Vertical	Fixed	GE600	dP	2Y		
								Q	2Y		
								V	2Y		IST-RR-1
								dP	Q		
								Q	Q		
								V	Q		IST-RR-1

Appendix A - Pump Test Plan

PUMP ID	FUNCTION	DRAWING/COOR	GROUP	CLASS	TYPE	FIXED OR VAR.	ACTUAL SPEED	TEST REQ	FREQ	PROCEDURE	NOTES
1-PMP-74-20-B	RHR PUMP 1B-B	1-47W810-1	A	2	Centrifugal Vertical	Fixed	GE600	dP	2Y		
								Q	2Y		
								V	2Y		IST-RR-1
								dP	Q		
								Q	Q		
								V	Q		IST-RR-1

Appendix A - Pump Test Plan

PUMP ID	FUNCTION	DRAWING/COOR	GROUP	CLASS	TYPE	FIXED OR VAR.	ACTUAL SPEED	TEST REQ	FREQ	PROCEDURE	NOTES
2-PMP-3-2A-S	TD AUX FEEDWATER PUMP 2A-S	0-47W803-2	B	3	Centrifugal Horizontal	Var	GE600	dP	2Y		
								N	2Y		
								Q	2Y		
								V	2Y		IST-RR-1
								N	Q		
								Q	Q		
								V	Q		IST-RR-1
								dP	Q		
2-PMP-3-118-A	AUX FEEDWATER PMP 2A-A	0-47W803-2	A	3	Centrifugal Horizontal	Fixed	GE600	dP	2Y		
								Q	2Y		
								V	2Y		IST-RR-1
								dP	Q		
								Q	Q		
								V	Q		IST-RR-1
2-PMP-3-128-B	AUX FEEDWATER PMP 2B-B	0-47W803-2	A	3	Centrifugal Horizontal	Fixed	GE600	dP	2Y		
								Q	2Y		
								V	2Y		IST-RR-1
								dP	Q		
								Q	Q		
								V	Q		IST-RR-1

Appendix A - Pump Test Plan

PUMP ID	FUNCTION	DRAWING/COOR	GROUP	CLASS	TYPE	FIXED OR VAR.	ACTUAL SPEED	TEST REQ	FREQ	PROCEDURE	NOTES
2-PMP-62-104-B	CENTRIFUGAL CHARGING PUMP 2B-B	2-47W809-1	A	2	Centrifugal Horizontal	Fixed	GE600	dP	2Y		
								Q	2Y		
								V	2Y		IST-RR-1
								dP	Q		
								Q	Q		
								V	Q		IST-RR-1
2-PMP-62-108-A	CENTRIFUGAL CHARGING PUMP 2A-A	2-47W809-1	A	2	Centrifugal Horizontal	Fixed	GE600	dP	2Y		
								Q	2Y		
								V	2Y		IST-RR-1
								dP	Q		
								Q	Q		
								V	Q		IST-RR-1
2-PMP-62-230-A	BORIC ACID TRANSFER PUMP 2A-A	0-47W809-5	A	3	Centrifugal Horizontal	Fixed	GE600	dP	2Y		
								Q	2Y		
								V	2Y		IST-RR-1
								dP	Q		
								Q	Q		
								V	Q		IST-RR-1

Appendix A - Pump Test Plan

PUMP ID	FUNCTION	DRAWING/COOR	GROUP	CLASS	TYPE	FIXED OR VAR.	ACTUAL SPEED	TEST REQ	FREQ	PROCEDURE	NOTES
2-PMP-62-232-B	BORIC ACID TRANSFER PUMP 2B-B	0-47W809-5	A	3	Centrifugal Horizontal	Fixed	GE600	dP	2Y		
								Q	2Y		
								V	2Y		IST-RR-1
								dP	Q		
								Q	Q		
								V	Q		IST-RR-1
2-PMP-63-10-A	SAFETY INJECTION PUMP 2A-A	2-47W811-1	B	2	Centrifugal Horizontal	Fixed	GE600	dP	2Y		
								Q	2Y		
								V	2Y		IST-RR-1
								dP	Q		
								Q	Q		
								V	Q		IST-RR-1
2-PMP-63-15-B	SAFETY INJECTION PUMP 2B-B	2-47W811-1	B	2	Centrifugal Horizontal	Fixed	GE600	dP	2Y		
								Q	2Y		
								V	2Y		IST-RR-1
								dP	Q		
								Q	Q		
								V	Q		IST-RR-1

Appendix A - Pump Test Plan

PUMP ID	FUNCTION	DRAWING/COOR	GROUP	CLASS	TYPE	FIXED OR VAR.	ACTUAL SPEED	TEST REQ	FREQ	PROCEDURE	NOTES
2-PMP-67-437-A	ERCW SCREEN WASH PUMP 2A-A	0-47W845-1	A	3	Vertical Line Shaft	Fixed	GE600	dP	2Y		C*
								Q	2Y		IST-RR-2
								V	2Y		IST-RR-1
								dP	Q		
								Q	Q		IST-RR-2
								V	Q		IST-RR-1
2-PMP-67-447-B	ERCW SCREEN WASH PUMP 2B-B	0-47W845-1	A	3	Vertical Line Shaft	Fixed	GE600	dP	2Y		C*
								Q	2Y		IST-RR-2
								V	2Y		IST-RR-1
								dP	Q		
								Q	Q		IST-RR-2
								V	Q		IST-RR-1
2-PMP-70-33-B	CCS PUMP 2B-B	0-47W859-1	A	3	Centrifugal Horizontal	Fixed	GE600	dP	2Y		
								Q	2Y		
								V	2Y		IST-RR-1
								dP	Q		
								Q	Q		
								V	Q		IST-RR-1

Appendix A - Pump Test Plan

PUMP ID	FUNCTION	DRAWING/COOR	GROUP	CLASS	TYPE	FIXED OR VAR.	ACTUAL SPEED	TEST REQ	FREQ	PROCEDURE	NOTES
2-PMP-70-59-A	CCS PUMP 2A-A	0-47W859-1	A	3	Centrifugal Horizontal	Fixed	GE600	dP	2Y		
								Q	2Y		
								V	2Y		IST-RR-1
								dP	Q		
								Q	Q		
								V	Q		IST-RR-1
2-PMP-72-10-B	CONTAINMENT SPRAY PUMP 2B-B	2-47W812-1	B	2	Centrifugal Horizontal	Fixed	GE600	dP	2Y		
								Q	2Y		
								V	2Y		IST-RR-1
								dP	Q		
								V	Q		IST-RR-1
2-PMP-72-27-A	CONTAINMENT SPRAY PUMP 2A-A	2-47W812-1	B	2	Centrifugal Horizontal	Fixed	GE600	dP	2Y		
								Q	2Y		
								V	2Y		IST-RR-1
								dP	Q		
								V	Q		IST-RR-1
2-PMP-74-10-A	RHR PUMP 2A-A	2-47W810-1	A	2	Centrifugal Vertical	Fixed	GE600	dP	2Y		
								Q	2Y		
								V	2Y		IST-RR-1
								dP	Q		
								Q	Q		
								V	Q		IST-RR-1

Appendix A - Pump Test Plan

PUMP ID	FUNCTION	DRAWING/COOR	GROUP	CLASS	TYPE	FIXED OR VAR.	ACTUAL SPEED	TEST REQ	FREQ	PROCEDURE	NOTES
2-PMP-74-20-B	RHR PUMP 2B-B	2-47W810-1	A	2	Centrifugal Vertical	Fixed	GE600	dP	2Y		
								Q	2Y		
								V	2Y		IST-RR-1
								dP	Q		
								Q	Q		
								V	Q		IST-RR-1

Appendix B - Valve Test Plan

VALVE ID	FUNCTION	DRAWING/COOR	CAT	ACT/ PASS	CLASS	SIZE	TYPE	ACT	POSITION			TEST REQ	FREQ	PROCEDURE	NOTES
									NORM	SAFE	FAIL				
0-CKV-18-123	FUEL OIL PMP SUCTION CHECK VLV	0-47W840-5 / E-2	C	ACT	3	1.5	CK	SA	C	C	N/A	CM	CM		
0-CKV-18-223	FUEL OIL PMP SUCTION CHECK VLV	0-47W840-5 / B-2	C	ACT	3	1.5	CK	SA	C	C	N/A	CM	CM		
0-CKV-18-DG/A1	FUEL OIL SUCTION CHECK VLV	0-47W840-4 / B-2	C	ACT	3	1	CK	SA	C	C	N/A	CM	CM		
0-CKV-18-DG/B1	FUEL OIL SUCTION CHECK VLV	0-47W840-4 / D-2	C	ACT	3	1	CK	SA	C	C	N/A	CM	CM		
0-FCV-32-82	ESSENT CONTROL AIR TR A NORM FLOW ISOL	0-47W848-1 / C-5	B	ACT	3	2	GL	AO	O	C	C	RPI FSC STC	2Y Q Q		
0-FCV-32-85	ESSENT CONTROL AIR TR B NORM FLOW ISOL	0-47W848-1 / E-5	B	ACT	3	2	GL	AO	O	C	C	RPI FSC STC	2Y Q Q		
0-CKV-32-256	ESSENT CONTROL AIR TR A NORM FLOW CHECK	0-47W848-1 / C-5	C	ACT	3	2	CK	SA	O	C	N/A	BDO CVC	Q Q		
0-CKV-32-264	ESSENT CONTROL AIR TR B NORM FLOW CHECK	0-47W848-1 / E-5	C	ACT	3	2	CK	SA	O	C	N/A	BDO CVC	Q Q		
0-RFV-32-366	AUX AIR COMPRESSOR A-A DISCH RELIEF	0-47W848-1 / A-4	C	ACT	3	0.5	RV	SA	C	O/C	N/A	RV	RV		Class C*
0-RFV-32-367	ESSENT CONTROL AIR TR A AIR RECEIVER RELIEF	0-47W848-1 / A-5	C	ACT	3	0.5	RV	SA	C	O/C	N/A	RV	RV		Class C*
0-RFV-32-368	AUX AIR COMPRESSOR B-B DISCH RELIEF	0-47W848-1 / H-5	C	ACT	3	0.5	RV	SA	C	O/C	N/A	RV	RV		Class C*
0-RFV-32-369	ESSENT CONTROL AIR TR B AIR RECEIVER RELIEF	0-47W848-1 / H-5	C	ACT	3	0.5	RV	SA	C	O/C	N/A	RV	RV		Class C*
0-RFV-32-372	AUX AIR COMPRESSOR A-A ACCUMULATOR RELIEF	0-47W848-1 / A-5	C	ACT	3	0.5	RV	SA	C	O/C	N/A	RV	RV		Class C*

Appendix B - Valve Test Plan

VALVE ID	FUNCTION	DRAWING/COOR	CAT	ACT/ PASS	CLASS	SIZE	TYPE	ACT	POSITION			TEST REQ	FREQ	PROCEDURE	NOTES
									NORM	SAFE	FAIL				
0-CKV-32-380	ESSENT CNTL AIR ISOL CKV TO 1-LCV-3-172/175	0-47W848-10 / G-4	C	ACT	3	2	CK	SA	C	O	N/A	BDO CVC	RO RO		DTJ-32 DTJ-32
0-CKV-32-386	ESSENT CNTL AIR SUPPLY CKV TO 2-LCV-3-172/175	0-47W848-10 / G-4	C	ACT	3	2	CK	SA	C	O	N/A	BDO CVC	RO RO		DTJ-32 DTJ-32
0-RFV-32-391	AUX AIR COMPRESSOR B-B ACCUMULATOR RELIEF	0-47W848-1 / H-5	C	ACT	3	0.5	RV	SA	C	O/C	N/A	RV	RV		Class C*
0-CKV-32-407	ESSENT CNTL AIR SUPPLY CKV TO 1-LCV-3-173/174	0-47W848-10 / C-3	C	ACT	3	2	CK	SA	C	O	N/A	BDO CVC	RO RO		DTJ-32 DTJ-32
0-CKV-32-414	ESSENT CNTL AIR SUPPLY CKV TO 2-LCV-3-173/174	0-47W848-10 / B-3	C	ACT	3	2	CK	SA	C	O	N/A	BDO CVC	RO RO		DTJ-32 DTJ-32
0-CKV-32-1509	ESSENT CNTL AIR CKV TO 1-LCV-3-172/175	0-47W848-10 / G-5	A/C	ACT	3	0.5	CK	SA	C	O/C	N/A	LTP CVC CVO	2Y RO RO		 DTJ-33 DTJ-33
0-CKV-32-1511	ESSENT CNTL AIR CKV TO 1-LCV-3-173/174	0-47W848-10 / C-4	A/C	ACT	3	0.5	CK	SA	C	O/C	N/A	LTP CVC CVO	2Y RO RO		 DTJ-33 DTJ-33

Appendix B - Valve Test Plan

VALVE ID	FUNCTION	DRAWING/COOR	CAT	ACT/ PASS	CLASS	SIZE	TYPE	ACT	POSITION			TEST REQ	FREQ	PROCEDURE	NOTES
									NORM	SAFE	FAIL				
0-CKV-32-1579	ESSENT CNTL AIR CKV TO 2-LCV-3-172/175	0-47W848-10 / F-5	A/C	ACT	3	0.5	CK	SA	C	O/C	N/A	LTP	2Y		
												CVC	RO		DTJ-33
												CVO	RO		DTJ-33
0-CKV-32-1581	ESSENT CNTL AIR CKV TO 2-LCV-3-173/174	0-47W848-10 / B-4	A/C	ACT	3	0.5	CK	SA	C	O/C	N/A	LTP	2Y		
												CVC	RO		DTJ-33
												CVO	RO		DTJ-33
0-FCV-67-144	CCS HX C OUTLET ERCW FLOW CNTL BYP	0-47W845-2 / C-6	B	ACT	3	16	GL	MO	O/C	O/C	FAI	RPI	2Y		
												STC	Q	0-SI-67-907-B	
												STO	Q		
0-FCV-67-152	CCS HX C OUTLET ERCW HDR B FLOW CNTL	0-47W845-2 / C-6	B	ACT	3	24	BF	MO	O/C	O/C	FAI	RPI	2Y		
												STC	Q	0-SI-67-907-B	
												STO	Q	0-SI-67-907-B	
0-FCV-67-205	STA AIR COMPR ERCW SUP HDR 1A ISOL	0-47W845-5 / H-2	B	ACT	3	4	BF	MO	O	C	FAI	RPI	2Y	0-SI-67-914-A	
												STC	Q	0-SI-67-907-A	
0-FCV-67-208	STA AIR COMPR ERCW SUP HDR 1B ISOL	0-47W845-5 / H-3	B	ACT	3	4	BF	MO	O	C	FAI	RPI	2Y	0-SI-67-914-B	
												STC	Q	0-SI-67-907-B	
0-CKV-67-502A	ERCW PUMP A-A AIR VENT LINE CHECK	0-47W845-1 / E-8	C	ACT	3	2	CK	SA	O/C	O/C	N/A	CVC	Q	0-SI-67-901-A 0-SI-67-917-A 0-SI-67-921-A	
												CVO	Q	0-SI-67-901-A 0-SI-67-917-A 0-SI-67-921-A	

Appendix B - Valve Test Plan

VALVE ID	FUNCTION	DRAWING/COOR	CAT	ACT/ PASS	CLASS	SIZE	TYPE	ACT	POSITION			TEST REQ	FREQ	PROCEDURE	NOTES
									NORM	SAFE	FAIL				
0-CKV-67-502B	ERCW PUMP B-A AIR VENT LINE CHECK	0-47W845-1 / E-6	C	ACT	3	2	CK	SA	O/C	O/C	N/A	CVC CVO	Q Q	0-SI-67-901-A 0-SI-67-918-A 0-SI-67-922-A 0-SI-67-901-A 0-SI-67-918-A 0-SI-67-922-A	
0-CKV-67-502C	ERCW PUMP C-A AIR VENT LINE CHECK	0-47W845-1 / F-6	C	ACT	3	2	CK	SA	O/C	O/C	N/A	CVC CVO	Q Q	0-SI-67-902-A 0-SI-67-917-A 0-SI-67-923-A 0-SI-67-902-A 0-SI-67-917-A 0-SI-67-923-A	
0-CKV-67-502D	ERCW PUMP D-A AIR VENT LINE CHECK	0-47W845-1 / F-8	C	ACT	3	2	CK	SA	O/C	O/C	N/A	CVC CVO	Q Q	0-SI-67-902-A 0-SI-67-918-A 0-SI-67-924-A 0-SI-67-902-A 0-SI-67-918-A 0-SI-67-924-A	
0-CKV-67-502E	ERCW PUMP E-B AIR VENT LINE CHECK	0-47W845-1 / F-4	C	ACT	3	2	CK	SA	O/C	O/C	N/A	CVC CVO	Q Q	0-SI-67-901-B 0-SI-67-917-B 0-SI-67-921-B 0-SI-67-901-B 0-SI-67-917-B 0-SI-67-921-B	
0-CKV-67-502F	ERCW PUMP F-B AIR VENT LINE CHECK	0-47W845-1 / F-6	C	ACT	3	2	CK	SA	O/C	O/C	N/A	CVC CVO	Q Q	0-SI-67-901-B 0-SI-67-917-B 0-SI-67-918-B 0-SI-67-922-B 0-SI-67-901-B 0-SI-67-917-B 0-SI-67-922-B	
0-CKV-67-502G	ERCW PUMP G-B AIR VENT LINE CHECK	0-47W845-1 / E-6	C	ACT	3	2	CK	SA	O/C	O/C	N/A	CVC CVO	Q Q	0-SI-67-902-B 0-SI-67-918-B 0-SI-67-923-B 0-SI-67-902-B 0-SI-67-918-B 0-SI-67-923-B	
0-CKV-67-502H	ERCW PUMP H-B AIR VENT LINE CHECK	0-47W845-1 / E-4	C	ACT	3	2	CK	SA	O/C	O/C	N/A	CVC CVO	Q Q	0-SI-67-902-B 0-SI-67-918-B 0-SI-67-924-B 0-SI-67-902-B 0-SI-67-918-B 0-SI-67-924-B	

Appendix B - Valve Test Plan

VALVE ID	FUNCTION	DRAWING/COOR	CAT	ACT/ PASS	CLASS	SIZE	TYPE	ACT	POSITION			TEST REQ	FREQ	PROCEDURE	NOTES
									NORM	SAFE	FAIL				
0-CKV-67-503A	ERCW PUMP A-A DISCH CHECK	0-47W845-1 / E-8	C	ACT	3	20	CK	SA	O/C	O/C	N/A	CVC CVO	Q Q	0-SI-67-901-A 0-SI-67-902-A 0-SI-67-917-A 0-SI-67-918-A 0-SI-67-922-A 0-SI-67-923-A 0-SI-67-924-A 0-SI-67-901-A 0-SI-67-917-A 0-SI-67-921-A	
0-CKV-67-503B	ERCW PUMP B-A DISCH CHECK	0-47W845-1 / D-7	C	ACT	3	20	CK	SA	O/C	O/C	N/A	CVC CVO	Q Q	0-SI-67-901-A 0-SI-67-902-A 0-SI-67-917-A 0-SI-67-918-A 0-SI-67-921-A 0-SI-67-923-A 0-SI-67-924-A 0-SI-67-901-A 0-SI-67-918-A 0-SI-67-922-A	
0-CKV-67-503C	ERCW PUMP C-A DISCH CHECK	0-47W845-1 / F-7	C	ACT	3	20	CK	SA	O/C	O/C	N/A	CVC CVO	Q Q	0-SI-67-901-A 0-SI-67-902-A 0-SI-67-917-A 0-SI-67-918-A 0-SI-67-921-A 0-SI-67-922-A 0-SI-67-924-A 0-SI-67-902-A 0-SI-67-917-A 0-SI-67-923-A	
0-CKV-67-503D	ERCW PUMP D-A DISCH CHECK	0-47W845-1 / F-8	C	ACT	3	20	CK	SA	O/C	O/C	N/A	CVC CVO	Q Q	0-SI-67-901-A 0-SI-67-902-A 0-SI-67-917-A 0-SI-67-918-A 0-SI-67-921-A 0-SI-67-922-A 0-SI-67-923-A 0-SI-67-902-A 0-SI-67-918-A 0-SI-67-924-A	

Appendix B - Valve Test Plan

VALVE ID	FUNCTION	DRAWING/COOR	CAT	ACT/ PASS	CLASS	SIZE	TYPE	ACT	POSITION			TEST REQ	FREQ	PROCEDURE	NOTES
									NORM	SAFE	FAIL				
0-CKV-67-503E	ERCW PUMP E-B DISCH CHECK	0-47W845-1 / F-4	C	ACT	3	20	CK	SA	O/C	O/C	N/A	CVC CVO	Q Q	0-SI-67-901-B 0-SI-67-902-B 0-SI-67-917-B 0-SI-67-918-B 0-SI-67-922-B 0-SI-67-923-B 0-SI-67-924-B 0-SI-67-901-B 0-SI-67-917-B 0-SI-67-921-B	
0-CKV-67-503F	ERCW PUMP F-B DISCH CHECK	0-47W845-1 / F-5	C	ACT	3	20	CK	SA	O/C	O/C	N/A	CVC CVO	Q Q	0-SI-67-901-B 0-SI-67-902-B 0-SI-67-917-B 0-SI-67-918-B 0-SI-67-921-B 0-SI-67-923-B 0-SI-67-924-B 0-SI-67-901-B 0-SI-67-917-B 0-SI-67-922-B	
0-CKV-67-503G	ERCW PUMP G-B DISCH CHECK	0-47W845-1 / E-5	C	ACT	3	20	CK	SA	O/C	O/C	N/A	CVC CVO	Q Q	0-SI-67-901-B 0-SI-67-902-B 0-SI-67-917-B 0-SI-67-918-B 0-SI-67-921-B 0-SI-67-922-B 0-SI-67-924-B 0-SI-67-902-B 0-SI-67-918-B 0-SI-67-923-B	
0-CKV-67-503H	ERCW PUMP H-B DISCH CHECK	0-47W845-1 / E-4	C	ACT	3	20	CK	SA	O/C	O/C	N/A	CVC CVO	Q Q	0-SI-67-901-B 0-SI-67-902-B 0-SI-67-917-B 0-SI-67-918-B 0-SI-67-921-B 0-SI-67-922-B 0-SI-67-923-B 0-SI-67-902-B 0-SI-67-918-B 0-SI-67-924-B	
0-CKV-67-507A	ERCW PUMP A-A PRELUBE CHECK	0-47W845-1 / E-8	C	ACT	3	0.5	CK	SA	O/C	O	N/A	BDC CVO	Q Q		

Appendix B - Valve Test Plan

VALVE ID	FUNCTION	DRAWING/COOR	CAT	ACT/ PASS	CLASS	SIZE	TYPE	ACT	POSITION			TEST REQ	FREQ	PROCEDURE	NOTES
									NORM	SAFE	FAIL				
0-CKV-67-507B	ERCW PUMP B-A PRELUBE CHECK	0-47W845-1 / E-7	C	ACT	3	0.5	CK	SA	O/C	O	N/A	BDC CVO	Q Q		
0-CKV-67-507C	ERCW PUMP C-A PRELUBE CHECK	0-47W845-1 / F-7	C	ACT	3	0.5	CK	SA	O/C	O	N/A	BDC CVO	Q Q		
0-CKV-67-507D	ERCW PUMP D-A PRELUBE CHECK	0-47W845-1 / F-8	C	ACT	3	0.5	CK	SA	O/C	O	N/A	BDC CVO	Q Q		
0-CKV-67-507E	ERCW PUMP E-B PRELUBE CHECK	0-47W845-1 / F-5	C	ACT	3	0.5	CK	SA	O/C	O	N/A	BDC CVO	Q Q		
0-CKV-67-507F	ERCW PUMP F-B PRELUBE CHECK	0-47W845-1 / F-6	C	ACT	3	0.5	CK	SA	O/C	O	N/A	BDC CVO	Q Q		
0-CKV-67-507G	ERCW PUMP G-B PRELUBE CHECK	0-47W845-1 / E-6	C	ACT	3	0.5	CK	SA	O/C	O	N/A	BDC CVO	Q Q		
0-CKV-67-507H	ERCW PUMP H-B PRELUBE CHECK	0-47W845-1 / E-5	C	ACT	3	0.5	CK	SA	O/C	O	N/A	BDC CVO	Q Q		
0-ISV-67-529	ERCW FLOOD MODE SUP SFPC HX ISOL	0-47W845-2 / C-5	B	PASS	3	20	BF	M	C	C	N/A	NTR	NTR		
0-ISV-67-532A	ERCW FLOOD MODE SUP RCW/ICE COND ISOL	0-47W845-2 / E-10	B	PASS	3	8	BF	M	C	C	N/A	NTR	NTR		
0-ISV-67-532B	ERCW FLOOD MODE SUP RCW/ICE COND ISOL	0-47W845-2 / E-10	B	PASS	3	8	BF	M	C	C	N/A	NTR	NTR		
0-RFV-67-550	CCS HX C ERCW OUT RELIEF	0-47W845-2 / C-6	C	ACT	3	0.75	TRV	SA	C	O/C	N/A	RV	RV	1-SI-0-911	
0-ISV-67-557	ERCW FLOOD MODE RET SFPC HX ISOL	0-47W845-2 / H-7	B	PASS	3	16	BF	M	C	C	N/A	NTR	NTR		
0-ISV-67-558A	ERCW FLOOD MODE RET HDR A RCP TH BAR ISOL	0-47W845-2 / H-8	B	PASS	3	3	BF	M	C	C	N/A	NTR	NTR		
0-ISV-67-558B	FLOOD MODE ISOLATION VALVE	0-47W845-2 / G-3	B	PASS	3	3	BF	M	C	C	N/A	NTR	NTR		

Appendix B - Valve Test Plan

VALVE ID	FUNCTION	DRAWING/COOR	CAT	ACT/ PASS	CLASS	SIZE	TYPE	ACT	POSITION			TEST REQ	FREQ	PROCEDURE	NOTES
									NORM	SAFE	FAIL				
0-ISV-67-559A	ERCW FLOOD MODE RET HDR A SAMP/SEAL WTR ISOL	0-47W845-2 / H-8	B	PASS	3	3	BF	M	C	C	N/A	NTR	NTR		
0-ISV-67-559B	FLOOD MODE ISOLATION VALVE	0-47W845-2 / G-3	B	PASS	3	3	BF	M	C	C	N/A	NTR	NTR		
0-RFV-67-671	AUX CNTL AIR COMPR A ERCW RELIEF	1-47W845-4 / B-10	C	ACT	3	0.75	TRV	SA	C	O/C	N/A	RV	RV	1-SI-0-902	
0-RFV-67-672	AUX CNTL AIR COMPR B ERCW RELIEF	2-47W845-7 / B-12	C	ACT	3	0.75	TRV	SA	C	O/C	N/A	RV	RV	1-SI-0-902	
0-RFV-67-1021A	MCR WTR CHLR A-A ERCW RELIEF	0-47W845-2 / A-10	C	ACT	3	0.75	TRV	SA	C	O/C	N/A	RV	RV	1-SI-0-911	
0-RFV-67-1021B	MCR WTR CHLR B-B ERCW RELIEF	0-47W845-2 / B-9	C	ACT	3	0.75	TRV	SA	C	O/C	N/A	RV	RV	1-SI-0-911	
0-RFV-67-1039A	ELEC BD RM A/C COND A-A ERCW RELIEF	1-47W845-4 / H-4	C	ACT	3	0.75	TRV	SA	C	O/C	N/A	RV	RV	1-SI-0-911	
0-RFV-67-1039B	ELEC BD RM A/C COND B-B ERCW RELIEF	1-47W845-4 / H-6	C	ACT	3	0.75	TRV	SA	C	O/C	N/A	RV	RV	1-SI-0-911	
0-FCV-70-194	SFP HEAT EXCHANGER B CCS SUPPLY	0-47W859-1 / B-4	B	ACT	3	20	BF	MO	O	C	FAI	RPI STC	2Y Q	1-SI-70-908-B 1-SI-70-908-B	
0-FCV-70-197	SFP HEAT EXCHANGER A CCS SUPPLY	0-47W859-1 / B-5	B	ACT	3	20	BF	MO	O	C	FAI	RPI STC	2Y Q	 1-SI-70-904-A 1-SI-70-908-A	
0-CKV-70-504	CCS PUMP C-S DISCHARGE CHECK	0-47W859-1 / D-7	C	ACT	3	16	CK	SA	O/C	O/C	N/A	CVC CVO	Q Q	0-SI-70-902-S 0-SI-70-903-S 0-SI-70-902-S 0-SI-70-903-S	
0-ISV-70-515A	SFP ERCW SUPPLY CCS ISOLATION	0-47W859-1 / B-4	B	PASS	3	20	BF	M	C	C	N/A	NTR	NTR		
0-ISV-70-515B	SFP ERCW SUPPLY CCS ISOLATION	0-47W859-1 / B-5	B	PASS	3	20	BF	M	C	C	N/A	NTR	NTR		
0-RFV-70-527A	SFP HEAT EXCHANGER A CCS OUT RELIEF	0-47W859-1 / H-4	C	ACT	3	0.75	TRV	SA	C	O/C	N/A	RV	RV	1-SI-0-911	
0-RFV-70-527B	SFP HEAT EXCHANGER B CCS OUT RELIEF	0-47W859-1 / H-6	C	ACT	3	0.75	TRV	SA	C	O/C	N/A	RV	RV	1-SI-0-911	
0-ISV-70-531A	SFP HEAT EXCHANGER A FLOOD MODE ERCW RETURN	0-47W859-1 / G-9	B	PASS	3	12	BF	M	C	C	N/A	NTR	NTR		

Appendix B - Valve Test Plan

VALVE ID	FUNCTION	DRAWING/COOR	CAT	ACT/ PASS	CLASS	SIZE	TYPE	ACT	POSITION			TEST REQ	FREQ	PROCEDURE	NOTES
									NORM	SAFE	FAIL				
0-ISV-70-531B	SFP HEAT EXCHANGER B FLOOD MODE ERCW RETURN	0-47W859-1 / G-9	B	PASS	3	12	BF	M	C	C	N/A	NTR	NTR		
0-ISV-70-601	CCS SPARE	1-47W859-2 / A-5	B	PASS	3	8	BF	M	C	C	N/A	NTR	NTR		

Appendix B - Valve Test Plan

VALVE ID	FUNCTION	DRAWING/COOR	CAT	ACT/ PASS	CLASS	SIZE	TYPE	ACT	POSITION			TEST REQ	FREQ	PROCEDURE	NOTES
									NORM	SAFE	FAIL				
1-FCV-1-4	MAIN STEAM ISOL VALVE LOOP 1	1-47W801-1 / C-3	B	ACT	2	32	GL	AO	O	C	C	RPI	2Y	1-SI-1-904	
												FSC	RO	1-SI-1-904	DTJ-01
												STC	RO	1-SI-1-904	DTJ-01
1-PCV-1-5	MAIN STEAM LOOP 1 PORV	1-47W801-1 / C-2	B	ACT	2	6	GL	AO	C	O/C	C	RPI	2Y	1-SI-1-906-A	
												FSC	RO	1-SI-1-902-A 1-SI-1-906-A	
												STC	RO	1-SI-1-902-A 1-SI-1-906-A	
												STO	RO	1-SI-1-902-A 1-SI-1-906-A	
1-FCV-1-7	STEAM GENERATOR 1 BLOWDOWN ISOL	1-47W801-2 / D-4	B	ACT	2	4	GL	SO	O	C	C	RPI	2Y	1-SI-1-905	
												FSC	Q	1-SI-1-901	
												STC	Q	1-SI-1-901	
1-FCV-1-11	MAIN STEAM ISOL VALVE LOOP 2	1-47W801-1 / E-3	B	ACT	2	32	GL	AO	O	C	C	RPI	2Y	1-SI-1-904	
												FSC	RO	1-SI-1-904	DTJ-01
												STC	RO	1-SI-1-904	DTJ-01
1-PCV-1-12	MAIN STEAM LOOP 2 PORV	1-47W801-1 / D-2	B	ACT	2	6	GL	AO	C	O/C	C	RPI	2Y	1-SI-1-906-B	
												FSC	RO	1-SI-1-902-B 1-SI-1-906-B	
												STC	RO	1-SI-1-902-B 1-SI-1-906-B	
												STO	RO	1-SI-1-902-B 1-SI-1-906-B	
1-FCV-1-14	STEAM GENERATOR 2 BLOWDOWN ISOL	1-47W801-2 / E-4	B	ACT	2	4	GL	SO	O	C	C	RPI	2Y	1-SI-1-905	
												FSC	Q	1-SI-1-901	
												STC	Q	1-SI-1-901	
1-FCV-1-15	MAIN STEAM LOOP 1 TD AUX FWP SUP	0-47W803-2 / C-8	B	ACT	2	4	GA	MO	O	O/C	FAI	RPI	2Y	1-SI-1-906-A	
												STC	Q	1-SI-1-901	
												STO	Q		

Appendix B - Valve Test Plan

VALVE ID	FUNCTION	DRAWING/COOR	CAT	ACT/ PASS	CLASS	SIZE	TYPE	ACT	POSITION			TEST REQ	FREQ	PROCEDURE	NOTES
									NORM	SAFE	FAIL				
1-FCV-1-16	MAIN STEAM LOOP 4 TD AUX FWP SUP	0-47W803-2 / A-8	B	ACT	2	4	GA	MO	C	O/C	FAI	RPI	2Y	1-SI-1-906-A	
												STC	Q	1-SI-1-901	
												STO	Q		
1-FCV-1-17	MAIN STEAM AUX FWP HDR SUPPLY ISOL	0-47W803-2 / C-7	B	ACT	3	4	GA	MO	O	O/C	FAI	RPI	2Y	1-SI-1-906-A	
												STC	CSD	1-SI-1-902-A 1-SI-1-906-A	DTJ-02
												STO	CSD		DTJ-02
1-FCV-1-18	MAIN STEAM AUX FWP HDR SUPPLY ISOL	0-47W803-2 / C-7	B	ACT	2	4	GA	MO	O	O/C	FAI	RPI	2Y	1-SI-1-906-B	
												STC	CSD	1-SI-1-902-B 1-SI-1-906-B	DTJ-02
												STO	CSD		DTJ-02
1-FCV-1-22	MAIN STEAM ISOL VLV LOOP 3	1-47W801-1 / F-3	B	ACT	2	32	GL	AO	O	C	C	RPI	2Y	1-SI-1-904	
												FSC	RO	1-SI-1-904	DTJ-01
												STC	RO	1-SI-1-904	DTJ-01
1-PCV-1-23	MAIN STEAM LOOP 3 PORV	1-47W801-1 / F-2	B	ACT	2	6	GL	AO	C	O/C	C	RPI	2Y	1-SI-1-906-A	
												FSC	RO	1-SI-1-902-A 1-SI-1-906-A	
												STC	RO	1-SI-1-902-A 1-SI-1-906-A	
												STO	RO	1-SI-1-902-A 1-SI-1-906-A	
1-FCV-1-25	STEAM GENERATOR 3 BLOWDOWN ISOL	1-47W801-2 / G-4	B	ACT	2	4	GL	SO	O	C	C	RPI	2Y	1-SI-1-905	
												FSC	Q	1-SI-1-901	
												STC	Q	1-SI-1-901	

Appendix B - Valve Test Plan

VALVE ID	FUNCTION	DRAWING/COOR	CAT	ACT/ PASS	CLASS	SIZE	TYPE	ACT	POSITION			TEST REQ	FREQ	PROCEDURE	NOTES
									NORM	SAFE	FAIL				
1-FCV-1-29	MAIN STEAM ISOL VALVE LOOP 4	1-47W801-1 / A-3	B	ACT	2	32	GL	AO	O	C	C	RPI	2Y	1-SI-1-904	
												FSC	RO	1-SI-1-904	DTJ-01
												STC	RO	1-SI-1-904	DTJ-01
1-PCV-1-30	MAIN STEAM LOOP 4 PORV	1-47W801-1 / A-2	B	ACT	2	6	GL	AO	C	O/C	C	RPI	2Y	1-SI-1-906-B	
												FSC	RO	1-SI-1-902-B 1-SI-1-906-B	
												STC	RO	1-SI-1-902-B 1-SI-1-906-B	
												STO	RO	1-SI-1-902-B 1-SI-1-906-B	
1-FCV-1-32	STEAM GENERATOR 4 BLOWDOWN ISOL	1-47W801-2 / B-4	B	ACT	2	4	GL	SO	O	C	C	RPI	2Y	1-SI-1-905	
												FSC	Q	1-SI-1-901	
												STC	Q	1-SI-1-901	
1-FCV-1-147	MAIN STEAM ISOL VLV LOOP 1 BYP WARMING VLV	1-47W801-1 / C-3	B	ACT	2	2	GL	AO	LC	C	C	RPI	2Y	1-SI-1-906-A	
												FSC	CSD	1-SI-1-902-A 1-SI-1-906-A	DTJ-03
												STC	CSD	1-SI-1-902-A 1-SI-1-906-A	DTJ-03
1-FCV-1-148	MAIN STEAM ISOL VLV LOOP 2 BYP WARMING VLV	1-47W801-1 / E-3	B	ACT	2	2	GL	AO	LC	C	C	RPI	2Y	1-SI-1-906-B	
												FSC	CSD	1-SI-1-902-B 1-SI-1-906-B	DTJ-03
												STC	CSD	1-SI-1-902-B 1-SI-1-906-B	DTJ-03
1-FCV-1-149	MAIN STEAM ISOL VLV LOOP 3 BYP WARMING VLV	1-47W801-1 / F-3	B	ACT	2	2	GL	AO	LC	C	C	RPI	2Y	1-SI-1-906-A	
												FSC	CSD	1-SI-1-902-A 1-SI-1-906-A	DTJ-03
												STC	CSD	1-SI-1-902-A 1-SI-1-906-A	DTJ-03

Appendix B - Valve Test Plan

VALVE ID	FUNCTION	DRAWING/COOR	CAT	ACT/ PASS	CLASS	SIZE	TYPE	ACT	POSITION			TEST REQ	FREQ	PROCEDURE	NOTES
									NORM	SAFE	FAIL				
1-FCV-1-150	MAIN STEAM ISOL VLV LOOP 4 BYP WARMING VLV	1-47W801-1 / A-3	B	ACT	2	2	GL	AO	LC	C	C	RPI	2Y	1-SI-1-906-B	
												FSC	CSD	1-SI-1-902-B 1-SI-1-906-B	DTJ-03
												STC	CSD	1-SI-1-902-B 1-SI-1-906-B	DTJ-03
1-FCV-1-181	STEAM GENERATOR 1 BLOWDOWN ISOL	1-47W801-2 / D-2	B	ACT	2	4	GL	SO	O	C	C	RPI	2Y	1-SI-1-905	
												FSC	Q	1-SI-1-901	
												STC	Q	1-SI-1-901	
1-FCV-1-182	STEAM GENERATOR 2 BLOWDOWN ISOL	1-47W801-2 / F-2	B	ACT	2	4	GL	SO	O	C	C	RPI	2Y	1-SI-1-905	
												FSC	Q	1-SI-1-901	
												STC	Q	1-SI-1-901	
1-FCV-1-183	STEAM GENERATOR 3 BLOWDOWN ISOL	1-47W801-2 / H-2	B	ACT	2	4	GL	SO	O	C	C	RPI	2Y	1-SI-1-905	
												FSC	Q	1-SI-1-901	
												STC	Q	1-SI-1-901	
1-FCV-1-184	STEAM GENERATOR 4 BLOWDOWN ISOL	1-47W801-2 / B-2	B	ACT	2	4	GL	SO	O	C	C	RPI	2Y	1-SI-1-905	
												FSC	Q	1-SI-1-901	
												STC	Q	1-SI-1-901	
1-SFV-1-512	MAIN STEAM LOOP 3 SAFETY VALVE	1-47W801-1 / F-2	C	ACT	2	6	RV	SA	C	O/C	N/A	RV	RV	1-SI-1-907	
1-SFV-1-513	MAIN STEAM LOOP 3 SAFETY VALVE	1-47W801-1 / F-2	C	ACT	2	6	RV	SA	C	O/C	N/A	RV	RV	1-SI-1-907	
1-SFV-1-514	MAIN STEAM LOOP 3 SAFETY VALVE	1-47W801-1 / F-2	C	ACT	2	6	RV	SA	C	O/C	N/A	RV	RV	1-SI-1-907	
1-SFV-1-515	MAIN STEAM LOOP 3 SAFETY VALVE	1-47W801-1 / F-2	C	ACT	2	6	RV	SA	C	O/C	N/A	RV	RV	1-SI-1-907	
1-SFV-1-516	MAIN STEAM LOOP 3 SAFETY VALVE	1-47W801-1 / F-2	C	ACT	2	6	RV	SA	C	O/C	N/A	RV	RV	1-SI-1-907	

Appendix B - Valve Test Plan

VALVE ID	FUNCTION	DRAWING/COOR	CAT	ACT/ PASS	CLASS	SIZE	TYPE	ACT	POSITION			TEST REQ	FREQ	PROCEDURE	NOTES
									NORM	SAFE	FAIL				
1-SFV-1-517	MAIN STEAM LOOP 2 SAFETY VALVE	1-47W801-1 / D-2	C	ACT	2	6	RV	SA	C	O/C	N/A	RV	RV		
1-SFV-1-518	MAIN STEAM LOOP 2 SAFETY VALVE	1-47W801-1 / D-2	C	ACT	2	6	RV	SA	C	O/C	N/A	RV	RV	1-SI-1-907	
1-SFV-1-519	MAIN STEAM LOOP 2 SAFETY VALVE	1-47W801-1 / D-2	C	ACT	2	6	RV	SA	C	O/C	N/A	RV	RV	1-SI-1-907	
1-SFV-1-520	MAIN STEAM LOOP 2 SAFETY VALVE	1-47W801-1 / D-2	C	ACT	2	6	RV	SA	C	O/C	N/A	RV	RV	1-SI-1-907	
1-SFV-1-521	MAIN STEAM LOOP 2 SAFETY VALVE	1-47W801-1 / D-2	C	ACT	2	6	RV	SA	C	O/C	N/A	RV	RV	1-SI-1-907	
1-SFV-1-522	MAIN STEAM LOOP 1 SAFETY VALVE	1-47W801-1 / B-2	C	ACT	2	6	RV	SA	C	O/C	N/A	RV	RV	1-SI-1-907	
1-SFV-1-523	MAIN STEAM LOOP 1 SAFETY VALVE	1-47W801-1 / B-2	C	ACT	2	6	RV	SA	C	O/C	N/A	RV	RV	1-SI-1-907	
1-SFV-1-524	MAIN STEAM LOOP 1 SAFETY VALVE	1-47W801-1 / B-2	C	ACT	2	6	RV	SA	C	O/C	N/A	RV	RV	1-SI-1-907	
1-SFV-1-525	MAIN STEAM LOOP 1 SAFETY VALVE	1-47W801-1 / B-2	C	ACT	2	6	RV	SA	C	O/C	N/A	RV	RV	1-SI-1-907	
1-SFV-1-526	MAIN STEAM LOOP 1 SAFETY VALVE	1-47W801-1 / B-2	C	ACT	2	6	RV	SA	C	O/C	N/A	RV	RV	1-SI-1-907	
1-SFV-1-527	MAIN STEAM LOOP 4 SAFETY VALVE	1-47W801-1 / A-2	C	ACT	2	6	RV	SA	C	O/C	N/A	RV	RV	1-SI-1-907	
1-SFV-1-528	MAIN STEAM LOOP 4 SAFETY VALVE	1-47W801-1 / A-2	C	ACT	2	6	RV	SA	C	O/C	N/A	RV	RV	1-SI-1-907	
1-SFV-1-529	MAIN STEAM LOOP 4 SAFETY VALVE	1-47W801-1 / A-2	C	ACT	2	6	RV	SA	C	O/C	N/A	RV	RV	1-SI-1-907	
1-SFV-1-530	MAIN STEAM LOOP 4 SAFETY VALVE	1-47W801-1 / A-2	C	ACT	2	6	RV	SA	C	O/C	N/A	RV	RV	1-SI-1-907	
1-SFV-1-531	MAIN STEAM LOOP 4 SAFETY VALVE	1-47W801-1 / A-2	C	ACT	2	6	RV	SA	C	O/C	N/A	RV	RV	1-SI-1-907	
1-ISV-1-619	MAIN STEAM LOOP 1 PORV ISOLATION	1-47W801-1 / C-2	B	ACT	2	6	GA	M	O	O/C	N/A	MS	2Y	1-SI-1-902-A	
1-ISV-1-620	MAIN STEAM LOOP 2 PORV ISOLATION	1-47W801-1 / D-2	B	ACT	2	6	GA	M	O	O/C	N/A	MS	2Y	1-SI-1-902-B 1-SI-1-906-B	
1-ISV-1-621	MAIN STEAM LOOP 3 PORV ISOLATION	1-47W801-1 / F-2	B	ACT	2	6	GA	M	O	O/C	N/A	MS	2Y	1-SI-1-902-A	
1-ISV-1-622	MAIN STEAM LOOP 4 PORV ISOLATION	1-47W801-1 / A-2	B	ACT	2	6	GA	M	O	O/C	N/A	MS	2Y	1-SI-1-902-B 1-SI-1-906-B	

Appendix B - Valve Test Plan

VALVE ID	FUNCTION	DRAWING/COOR	CAT	ACT/ PASS	CLASS	SIZE	TYPE	ACT	POSITION			TEST REQ	FREQ	PROCEDURE	NOTES
									NORM	SAFE	FAIL				
1-CKV-1-891	MS SUPPLY FW TURB CHECK	0-47W803-2 / C-8	C	ACT	2	4	CK	SA	C	O/C	N/A	CM	CM	1-SI-1-908 1-SI-3-912 1-SI-3-923-S	
1-CKV-1-892	MS SUPPLY FW TURB CHECK	0-47W803-2 / A-8	C	ACT	2	4	CK	SA	C	O/C	N/A	CM	CM	1-SI-1-908 1-SI-3-912 1-SI-3-923-S	
1-FCV-3-33	STEAM GENERATOR 1 MFW ISOL	1-47W803-1 / C-3	B	ACT	2	16	GA	MO	O	C	FAI	RPI	2Y	1-SI-3-904	
												STC	RO	1-SI-3-904	DTJ-06
1-FCV-3-35	STEAM GENERATOR 1 MFW REG VALVE	1-47W803-1 / C-4	B	ACT	3	16	ANG	AO	O	C	C	RPI	2Y	1-SI-3-904	
												FSC	RO	1-SI-3-904	DTJ-06
												STC	RO	1-SI-3-904	DTJ-06
1-FCV-3-47	STEAM GENERATOR 2 MFW ISOL	1-47W803-1 / E-3	B	ACT	2	16	GA	MO	O	C	FAI	RPI	2Y	1-SI-3-904	
												STC	RO	1-SI-3-904	DTJ-06
1-FCV-3-48	STEAM GENERATOR 2 MFW REG VALVE	1-47W803-1 / E-4	B	ACT	3	16	ANG	AO	O	C	C	RPI	2Y	1-SI-3-904	
												FSC	RO	1-SI-3-904	DTJ-06
												STC	RO	1-SI-3-904	DTJ-06
1-FCV-3-87	STEAM GENERATOR 3 MFW ISOL	1-47W803-1 / F-3	B	ACT	2	16	GA	MO	O	C	FAI	RPI	2Y	1-SI-3-904	
												STC	RO	1-SI-3-904	DTJ-06
1-FCV-3-90	STEAM GENERATOR 3 MFW REG VALVE	1-47W803-1 / F-4	B	ACT	3	16	ANG	AO	O	C	C	RPI	2Y	1-SI-3-904	
												FSC	RO	1-SI-3-904	DTJ-06
												STC	RO	1-SI-3-904	DTJ-06
1-FCV-3-100	STEAM GENERATOR 4 MFW ISOL	1-47W803-1 / B-3	B	ACT	2	16	GA	MO	O	C	FAI	RPI	2Y	1-SI-3-904	
												STC	RO	1-SI-3-904	DTJ-06

Appendix B - Valve Test Plan

VALVE ID	FUNCTION	DRAWING/COOR	CAT	ACT/ PASS	CLASS	SIZE	TYPE	ACT	POSITION			TEST REQ	FREQ	PROCEDURE	NOTES
									NORM	SAFE	FAIL				
1-FCV-3-103	STEAM GENERATOR 4 MFW REG VALVE	1-47W803-1 / B-4	B	ACT	3	16	ANG	AO	O	C	C	RPI	2Y	1-SI-3-904	
												FSC	RO		DTJ-06
												STC	RO	1-SI-3-904	DTJ-06
1-FCV-3-116A	ERCW HEADER A AFW PUMP 1A-A SUCTION	0-47W803-2 / F-5	B	ACT	3	4	GA	MO	C	O	FAI	RPI	2Y	1-SI-3-907-A	
												STO	Q	1-SI-3-903-A 1-SI-3-907-A	
1-FCV-3-116B	ERCW HEADER A AFW PUMP 1A-A SUCTION	0-47W803-2 / F-5	B	ACT	3	4	GA	MO	C	O	FAI	RPI	2Y	1-SI-3-907-A	
												STO	Q	1-SI-3-903-A 1-SI-3-907-A	
1-PCV-3-122	AUX FEEDWATER PMP 1A-A DISCHARGE PRESS CONTROL	0-47W803-2 / F-5	B	ACT	3	4	GL	AO	PO	PO	C	FSC	Q	1-SI-3-901-A 1-SI-3-923-A	
												PSO	Q		
												STO	Q	1-FOR-3-4-A 1-SI-3-901-A 1-SI-3-923-A	
1-FCV-3-126A	ERCW HEADER B AFW PUMP 1B-B SUCTION	0-47W803-2 / F-7	B	ACT	3	4	GA	MO	C	O	FAI	RPI	2Y	1-SI-3-907-B	
												STO	Q	1-SI-3-903-B 1-SI-3-907-B	
1-FCV-3-126B	ERCW HEADER B AFW PUMP 1B-B SUCTION	0-47W803-2 / F-7	B	ACT	3	4	GA	MO	C	O	FAI	RPI	2Y	1-SI-3-907-B	
												STO	Q	1-SI-3-903-B 1-SI-3-907-B	
1-PCV-3-132	AUX FEEDWATER PMP 1B-B DISCHARGE PRESS CONTROL	0-47W803-2 / F-6	B	ACT	3	4	GL	AO	PO	PO	C	FSC	Q	1-SI-3-901-B 1-SI-3-923-B	
												PSO	Q		
												STO	Q	1-FOR-3-4-B 1-SI-3-901-B 1-SI-3-923-B	
1-FCV-3-136A	ERCW HEADER A TD AFW PMP SUCT	0-47W803-2 / H-4	B	ACT	3	6	GA	MO	C	O	FAI	RPI	2Y	1-SI-3-920	
												STO	Q	1-SI-3-908 1-SI-3-920	

Appendix B - Valve Test Plan

VALVE ID	FUNCTION	DRAWING/COOR	CAT	ACT/ PASS	CLASS	SIZE	TYPE	ACT	POSITION			TEST REQ	FREQ	PROCEDURE	NOTES
									NORM	SAFE	FAIL				
1-FCV-3-136B	ERCW HEADER A TD AFW PMP SUCT	0-47W803-2 / H-4	B	ACT	3	6	GA	MO	C	O	FAI	RPI STO	2Y Q	1-SI-3-920 1-SI-3-908 1-SI-3-920	
1-LCV-3-148A	SG 3 AUX FEEDWATER 1-LCV-3-148 BYPASS	0-47W803-2 / G-8	B	ACT	3	2	ANG	AO	C	O/C	C	RPI FSC STC STO	2Y Q Q Q	1-SI-3-907-B 1-SI-3-903-B 1-SI-3-907-B 1-FOR-3-4-B 1-SI-3-903-B 1-SI-3-907-B 1-FOR-3-4-B 1-SI-3-903-B 1-SI-3-907-B	
1-LCV-3-148	MD AFW PUMP 1B-B SG 3 LEVEL CONTROL	0-47W803-2 / G-8	B	ACT	3	4	GL	AO	C	O/C	O	RPI FSO STC STO	2Y Q Q Q	1-SI-3-907-B 1-SI-3-903-B 1-SI-3-907-B 1-FOR-3-4-B 1-SI-3-903-B 1-SI-3-907-B 1-FOR-3-4-B 1-SI-3-903-B 1-SI-3-907-B	
1-LCV-3-156	MD AFW PUMP 1A-A SG 2 LEVEL CONTROL	0-47W803-2 / E-8	B	ACT	3	4	GL	AO	C	O/C	O	RPI FSO STC STO	2Y Q Q Q	1-SI-3-907-A 1-SI-3-903-A 1-SI-3-907-A 1-FOR-3-4-A 1-SI-3-903-A 1-SI-3-907-A 1-FOR-3-4-A 1-SI-3-903-A 1-SI-3-907-A	
1-LCV-3-156A	SG 2 AUX FEEDWATER 1-LCV-3-156 BYPASS	0-47W803-2 / E-8	B	ACT	3	2	ANG	AO	C	O/C	C	RPI FSC STC STO	2Y Q Q Q	1-SI-3-907-A 1-SI-3-903-A 1-SI-3-907-A 1-FOR-3-4-A 1-SI-3-903-A 1-SI-3-907-A 1-FOR-3-4-A 1-SI-3-903-A 1-SI-3-907-A	

Appendix B - Valve Test Plan

VALVE ID	FUNCTION	DRAWING/COOR	CAT	ACT/ PASS	CLASS	SIZE	TYPE	ACT	POSITION			TEST REQ	FREQ	PROCEDURE	NOTES
									NORM	SAFE	FAIL				
1-LCV-3-164	MD AFW PUMP 1A-A SG 1 LEVEL CONTROL	0-47W803-2 / D-8	B	ACT	3	4	GL	AO	C	O/C	O	RPI	2Y	1-SI-3-907-A	
												FSO	Q	1-SI-3-903-A 1-SI-3-907-A	
												STC	Q	1-FOR-3-4-A 1-SI-3-903-A 1-SI-3-907-A	
												STO	Q	1-FOR-3-4-A 1-SI-3-903-A 1-SI-3-907-A	
1-LCV-3-164A	SG 1 AUX FEEDWATER 1-LCV-3-164 BYPASS	0-47W803-2 / C-8	B	ACT	3	2	ANG	AO	C	O/C	C	RPI	2Y	1-SI-3-907-A	
												FSC	Q	1-SI-3-903-A 1-SI-3-907-A	
												STC	Q	1-FOR-3-4-A 1-SI-3-903-A 1-SI-3-907-A	
												STO	Q	1-FOR-3-4-A 1-SI-3-903-A 1-SI-3-907-A	
1-LCV-3-171A	SG 4 AUX FEEDWATER 1-LCV-3-171 BYPASS	0-47W803-2 / B-8	B	ACT	3	2	ANG	AO	C	O/C	C	RPI	2Y	1-SI-3-907-B	
												FSC	Q	1-SI-3-903-B 1-SI-3-907-B	
												STC	Q	1-FOR-3-4-B 1-SI-3-903-B 1-SI-3-907-B	
												STO	Q	1-FOR-3-4-B 1-SI-3-903-B 1-SI-3-907-B	
1-LCV-3-171	MD AFW PUMP 1B-B SG 4 LEVEL CONTROL	0-47W803-2 / B-8	B	ACT	3	4	GL	AO	C	O/C	O	RPI	2Y	1-SI-3-907-B	
												FSO	Q	1-SI-3-903-B 1-SI-3-907-B	
												STC	Q	1-FOR-3-4-B 1-SI-3-903-B 1-SI-3-907-B	
												STO	Q	1-FOR-3-4-B 1-SI-3-903-B 1-SI-3-907-B	

Appendix B - Valve Test Plan

VALVE ID	FUNCTION	DRAWING/COOR	CAT	ACT/ PASS	CLASS	SIZE	TYPE	ACT	POSITION			TEST REQ	FREQ	PROCEDURE	NOTES
									NORM	SAFE	FAIL				
1-LCV-3-172	TD AFW PUMP SG 3 LEVEL CONTROL	0-47W803-2 / F-8	B	ACT	3	3	GL	AO	C	O/C	C	RPI	2Y	1-SI-3-920	
												FSC	Q	1-SI-3-908 1-SI-3-920	
												STC	Q	1-FOR-3-5 1-SI-3-908 1-SI-3-920	
												STO	Q	1-FOR-3-5 1-SI-3-908 1-SI-3-920	
1-LCV-3-173	TD AFW PUMP SG 2 LEVEL CONTROL	0-47W803-2 / E-8	B	ACT	3	3	GL	AO	C	O/C	C	RPI	2Y	1-SI-3-920	
												FSC	Q	1-SI-3-908 1-SI-3-920	
												STC	Q	1-FOR-3-5 1-SI-3-908 1-SI-3-920	
												STO	Q	1-FOR-3-5 1-SI-3-908 1-SI-3-920	
1-LCV-3-174	TD AFW PUMP SG 1 LEVEL CONTROL	0-47W803-2 / C-8	B	ACT	3	3	GL	AO	C	O/C	C	RPI	2Y	1-SI-3-920	
												FSC	Q	1-SI-3-908 1-SI-3-920	
												STC	Q	1-FOR-3-5 1-SI-3-908 1-SI-3-920	
												STO	Q	1-FOR-3-5 1-SI-3-908 1-SI-3-920	
1-LCV-3-175	TD AFW PUMP SG 4 LEVEL CONTROL	0-47W803-2 / B-8	B	ACT	3	3	GL	AO	C	O/C	C	RPI	2Y	1-SI-3-920	
												FSC	Q	1-SI-3-908 1-SI-3-920	
												STC	Q	1-FOR-3-5 1-SI-3-908 1-SI-3-920	
												STO	Q	1-FOR-3-5 1-SI-3-908 1-SI-3-920	
1-FCV-3-179A	ERCW HEADER B TD AFW PMP SUCT	0-47W803-2 / H-4	B	ACT	3	6	GA	MO	C	O	FAI	RPI	2Y	1-SI-3-920	
												STO	Q	1-SI-3-908 1-SI-3-920	

Appendix B - Valve Test Plan

VALVE ID	FUNCTION	DRAWING/COOR	CAT	ACT/ PASS	CLASS	SIZE	TYPE	ACT	POSITION			TEST REQ	FREQ	PROCEDURE	NOTES
									NORM	SAFE	FAIL				
1-FCV-3-179B	ERCW HEADER B TD AFW PMP SUCT	0-47W803-2 / H-4	B	ACT	3	6	GA	MO	C	O	FAI	RPI	2Y	1-SI-3-920	
												STO	Q	1-SI-3-908 1-SI-3-920	
1-FCV-3-236	STEAM GENERATOR 1 MFW BYPASS LINE ISOL	1-47W803-1 / C-3	B	ACT	2	6	GL	AO	O/C	C	C	RPI	2Y	1-SI-3-904	
												FSC	RO	1-SI-3-904	DTJ-06
												STC	RO	1-SI-3-904	DTJ-06
1-FCV-3-239	STEAM GENERATOR 2 MFW BYPASS LINE ISOL	1-47W803-1 / D-3	B	ACT	2	6	GL	AO	O/C	C	C	RPI	2Y	1-SI-3-904	
												FSC	RO	1-SI-3-904	DTJ-06
												STC	RO	1-SI-3-904	DTJ-06
1-FCV-3-242	STEAM GENERATOR 3 MFW BYPASS LINE ISOL	1-47W803-1 / E-3	B	ACT	2	6	GL	AO	O/C	C	C	RPI	2Y	1-SI-3-904	
												FSC	RO	1-SI-3-904	DTJ-06
												STC	RO	1-SI-3-904	DTJ-06
1-FCV-3-245	STEAM GENERATOR 4 MFW BYPASS LINE ISOL	1-47W803-1 / A-3	B	ACT	2	6	GL	AO	O/C	C	C	RPI	2Y	1-SI-3-904	
												FSC	RO	1-SI-3-904	DTJ-06
												STC	RO	1-SI-3-904	DTJ-06
1-FCV-3-355	AUX FEEDWATER PMP 1A-A RECIRC FLOW	0-47W803-2 / F-4	B	ACT	3	2	GL	AO	C	C	C	RPI	2Y	1-SI-3-907-A	
												FSC	Q	1-SI-3-903-A 1-SI-3-907-A	
												STC	Q	1-SI-3-903-A 1-SI-3-907-A	

Appendix B - Valve Test Plan

VALVE ID	FUNCTION	DRAWING/COOR	CAT	ACT/ PASS	CLASS	SIZE	TYPE	ACT	POSITION			TEST REQ	FREQ	PROCEDURE	NOTES
									NORM	SAFE	FAIL				
1-FCV-3-359	AUX FEEDWATER PMP 1B-B RECIRC FLOW	0-47W803-2 / G-7	B	ACT	3	2	GL	AO	C	C	C	RPI FSC STC	2Y Q Q	1-SI-3-907-B 1-SI-3-903-B 1-SI-3-907-B 1-SI-3-903-B 1-SI-3-907-B	
1-CKV-3-508	STEAM GENERATOR 3 MFW CHECK	1-47W803-1 / F-2	C	ACT	2	16	CK	SA	O	C	N/A	BDO CVC	CSD CSD		DTJ-05 DTJ-05
1-CKV-3-509	STEAM GENERATOR 2 MFW CHECK	1-47W803-1 / E-2	C	ACT	2	16	CK	SA	O	C	N/A	BDO CVC	CSD CSD		DTJ-05 DTJ-05
1-CKV-3-510	STEAM GENERATOR 1 MFW CHECK	1-47W803-1 / C-2	C	ACT	2	16	CK	SA	O	C	N/A	BDO CVC	CSD CSD		DTJ-05 DTJ-05
1-CKV-3-511	STEAM GENERATOR 4 MFW CHECK	1-47W803-1 / B-2	C	ACT	2	16	CK	SA	O	C	N/A	BDO CVC	CSD CSD		DTJ-05 DTJ-05
1-CKV-3-638	STEAM GENERATOR 4 MFW BYPASS LINE CHECK	1-47W803-1 / A-3	C	ACT	2	6	CK	SA	C	C	N/A	CM	CM	1-SI-3-919	
1-CKV-3-644	STEAM GENERATOR 4 MFW BYPASS LINE CHECK	1-47W803-1 / A-1	C	ACT	2	6	CK	SA	C	O/C	N/A	CM	CM	1-SI-3-912 1-SI-3-918 1-SI-3-923-S	
1-CKV-3-645	STEAM GENERATOR 4 MFW BYPASS LINE CHECK	1-47W803-1 / A-1	C	ACT	2	6	CK	SA	C	O/C	N/A	CM	CM	1-SI-3-912 1-SI-3-918 1-SI-3-923-S	
1-CKV-3-652	STEAM GENERATOR 1 MFW BYPASS LINE CHECK	1-47W803-1 / C-2	C	ACT	2	6	CK	SA	C	C	N/A	CM	CM	1-SI-3-919	
1-CKV-3-655	STEAM GENERATOR 1 MFW BYPASS LINE CHECK	1-47W803-1 / C-1	C	ACT	2	6	CK	SA	C	O/C	N/A	CM	CM	1-SI-3-912 1-SI-3-918 1-SI-3-923-S	
1-CKV-3-656	STEAM GENERATOR 1 MFW BYPASS LINE CHECK	1-47W803-1 / C-1	C	ACT	2	6	CK	SA	C	O/C	N/A	CM	CM	1-SI-3-912 1-SI-3-918 1-SI-3-923-S	
1-CKV-3-669	STEAM GENERATOR 2 MFW BYPASS LINE CHECK	1-47W803-1 / D-2	C	ACT	2	6	CK	SA	C	C	N/A	CM	CM	1-SI-3-919	

Appendix B - Valve Test Plan

VALVE ID	FUNCTION	DRAWING/COOR	CAT	ACT/ PASS	CLASS	SIZE	TYPE	ACT	POSITION			TEST REQ	FREQ	PROCEDURE	NOTES
									NORM	SAFE	FAIL				
1-CKV-3-670	STEAM GENERATOR 2 MFW BYPASS LINE CHECK	1-47W803-1 / D-1	C	ACT	2	6	CK	SA	C	O/C	N/A	CM	CM	1-SI-3-912 1-SI-3-918 1-SI-3-923-S	
1-CKV-3-678	STEAM GENERATOR 3 MFW BYPASS LINE CHECK	1-47W803-1 / E-2	C	ACT	2	6	CK	SA	C	C	N/A	CM	CM	1-SI-3-919	
1-CKV-3-679	STEAM GENERATOR 3 MFW BYPASS LINE CHECK	1-47W803-1 / F-1	C	ACT	2	6	CK	SA	C	O/C	N/A	CM	CM	1-SI-3-912 1-SI-3-918 1-SI-3-923-S	
1-CKV-3-805	AUX FEEDWATER PMP 1A-A SUCTION CHECK	0-47W803-2 / F-5	C	ACT	3	8	CK	SA	C	O/C	N/A	CVC CVO	RO RO	1-SI-3-923-A	DTJ-07 DTJ-07
1-CKV-3-806	AUX FEEDWATER PMP 1B-B SUCTION CHECK	0-47W803-2 / F-6	C	ACT	3	8	CK	SA	C	O/C	N/A	CVC CVO	RO RO	1-SI-3-923-B	DTJ-07 DTJ-07
1-CKV-3-810	TD AUX FEEDWATER PUMP SUCTION CHECK	0-47W803-2 / G-3	C	ACT	3	10	CK	SA	C	O/C	N/A	CVC CVO	RO RO	1-SI-3-923-S 1-SI-3-912 1-SI-3-923-S	DTJ-07 DTJ-07
1-CKV-3-814	AUX FEEDWATER PMP 1A-A RECIRC CHECK	0-47W803-2 / G-5	C	ACT	3	1.5	CK	SA	C	O	N/A	BDC CVO	Q Q	1-SI-3-901-A 1-SI-3-923-A	
1-CKV-3-815	AUX FEEDWATER PMP 1B-B RECIRC CHECK	0-47W803-2 / G-6	C	ACT	3	1.5	CK	SA	C	O	N/A	BDC CVO	Q Q	1-SI-3-901-B 1-SI-3-923-B	
1-CKV-3-818	TD AUX FEEDWATER PUMP RECIRC CHECK	0-47W803-2 / G-6	C	ACT	3	1.5	CK	SA	C	O	N/A	BDC CVO	Q Q	1-SI-3-902 1-SI-3-923-S	
1-CKV-3-830	AUX FEEDWATER PMP 1B-B SG 3 SUPPLY CHECK	0-47W803-2 / G-8	C	ACT	2	4	CK	SA	C	O/C	N/A	CM	CM	1-SI-3-906-B 1-SI-3-911	

Appendix B - Valve Test Plan

VALVE ID	FUNCTION	DRAWING/COOR	CAT	ACT/ PASS	CLASS	SIZE	TYPE	ACT	POSITION			TEST REQ	FREQ	PROCEDURE	NOTES
									NORM	SAFE	FAIL				
1-CKV-3-831	AUX FEEDWATER PMP 1A-A SG 2 SUPPLY CHECK	0-47W803-2 / E-8	C	ACT	2	4	CK	SA	C	O/C	N/A	CM	CM	1-SI-3-906-A 1-SI-3-911	
1-CKV-3-832	AUX FEEDWATER PMP 1A-A SG 1 SUPPLY CHECK	0-47W803-2 / D-8	C	ACT	2	4	CK	SA	C	O/C	N/A	CM	CM	1-SI-3-906-A 1-SI-3-911	
1-CKV-3-833	AUX FEEDWATER PMP 1B-B SG 4 SUPPLY CHECK	0-47W803-2 / B-8	C	ACT	2	4	CK	SA	C	O/C	N/A	CM	CM	1-SI-3-906-B 1-SI-3-911	
1-CKV-3-861	AUX FEEDWATER PMP 1B-B SG 3 SUPPLY CHECK	0-47W803-2 / G-10	C	ACT	2	4	CK	SA	C	O/C	N/A	CM	CM	1-SI-3-909 1-SI-3-912 1-SI-3-923-S	
1-CKV-3-862	AUX FEEDWATER PMP 1A-A SG 2 SUPPLY CHECK	0-47W803-2 / E-10	C	ACT	2	4	CK	SA	C	O/C	N/A	CM	CM	1-SI-3-909 1-SI-3-912 1-SI-3-923-S	
1-CKV-3-864	TD AUX FEEDWATER PUMP DISCHARGE CHECK	0-47W803-2 / H-6	C	ACT	3	6	CK	SA	C	O/C	N/A	CVC CVO	RO RO	1-SI-3-923-S 1-SI-3-912 1-SI-3-923-S	DTJ-07 DTJ-07
1-CKV-3-871	TD AUX FEEDWATER PUMP SG 3 SUPPLY CHECK	0-47W803-2 / F-8	C	ACT	2	4	CK	SA	C	O/C	N/A	CM	CM	1-SI-3-912 1-SI-3-917 1-SI-3-923-S	
1-CKV-3-872	TD AUX FEEDWATER PUMP SG 2 SUPPLY CHECK	0-47W803-2 / E-8	C	ACT	2	4	CK	SA	C	O/C	N/A	CM	CM	1-SI-3-912 1-SI-3-917 1-SI-3-923-S	
1-CKV-3-873	TD AUX FEEDWATER PUMP SG 1 SUPPLY CHECK	0-47W803-2 / C-8	C	ACT	2	4	CK	SA	C	O/C	N/A	CM	CM	1-SI-3-912 1-SI-3-917 1-SI-3-923-S	
1-CKV-3-874	TD AUX FEEDWATER PUMP SG 4 SUPPLY CHECK	0-47W803-2 / A-8	C	ACT	2	4	CK	SA	C	O/C	N/A	CM	CM	1-SI-3-912 1-SI-3-917 1-SI-3-923-S	
1-CKV-3-921	AUX FEEDWATER PMP 1B-B SG 3 SUPPLY CHECK	0-47W803-2 / G-10	C	ACT	2	4	CK	SA	C	O/C	N/A	CM	CM	1-SI-3-909 1-SI-3-912 1-SI-3-923-S	
1-CKV-3-922	AUX FEEDWATER PMP 1A-A SG 2 SUPPLY CHECK	0-47W803-2 / F-10	C	ACT	2	4	CK	SA	C	O/C	N/A	CM	CM	1-SI-3-909 1-SI-3-912 1-SI-3-923-S	

Appendix B - Valve Test Plan

VALVE ID	FUNCTION	DRAWING/COOR	CAT	ACT/ PASS	CLASS	SIZE	TYPE	ACT	POSITION			TEST REQ	FREQ	PROCEDURE	NOTES
									NORM	SAFE	FAIL				
1-FCV-26-240	REACTOR BLDG STANDPIPE ISOL	1-47W850-9 / B-9	A	ACT	2	4	GA	MO	O	C	FAI	RPI	2Y		
												LTJ	AppJ	1-SI-26-701	
												STC	Q	1-SI-26-901 1-SI-26-903	
1-FCV-26-243	REACTOR COOLANT PUMP SPRINKLER HDR ISOL	1-47W850-9 / B-3	A	ACT	2	4	GA	MO	O	C	FAI	RPI	2Y		
												LTJ	AppJ	1-SI-26-701	
												STC	Q	1-SI-26-901 1-SI-26-903	
1-CKV-26-1260	REACTOR BLDG HPFP SUPPLY HDR CHECK	1-47W850-9 / B-9	A/C	ACT	2	4	CK	SA	C	C	N/A	LTJ	AppJ	1-SI-26-701	
												CM	CM	1-SI-26-701	
1-CKV-26-1296	REACTOR COOLANT PUMP SPRINKLER HDR ISOL CHK	1-47W850-9 / B-3	A/C	ACT	2	4	CK	SA	C	C	N/A	LTJ	AppJ	1-SI-26-701	
												CM	CM	1-SI-26-701	
1-FCV-30-7	CNTMT UPPER COMPARTMENT PURGE SUPPLY	1-47W866-1 / C-1	A	ACT	2	24	BF	AO	O/C	C	C	RPI	2Y	1-SI-30-902-A	
												LTJ	AppJ	1-SI-30-701	
												FSC	Q	1-SI-30-901-A	
												STC	Q	1-SI-30-901-A	
1-FCV-30-8	CNTMT UPPER COMPARTMENT PURGE SUPPLY	1-47W866-1 / C-2	A	ACT	2	24	BF	AO	O/C	C	C	RPI	2Y	1-SI-30-902-B	
												LTJ	AppJ	1-SI-30-701	
												FSC	Q	1-SI-30-901-B	
												STC	Q	1-SI-30-901-B	
1-FCV-30-9	CNTMT UPPER COMPARTMENT PURGE SUPPLY	1-47W866-1 / C-1	A	ACT	2	24	BF	AO	O/C	C	C	RPI	2Y	1-SI-30-902-B	
												LTJ	AppJ	1-SI-30-701	
												FSC	Q	1-SI-30-901-B	
												STC	Q	1-SI-30-901-B	

Appendix B - Valve Test Plan

VALVE ID	FUNCTION	DRAWING/COOR	CAT	ACT/ PASS	CLASS	SIZE	TYPE	ACT	POSITION			TEST REQ	FREQ	PROCEDURE	NOTES
									NORM	SAFE	FAIL				
1-FCV-30-10	CNTMT UPPER COMPARTMENT PURGE SUPPLY	1-47W866-1 / C-2	A	ACT	2	24	BF	AO	O/C	C	C	RPI	2Y	1-SI-30-902-A	
												LTJ	AppJ	1-SI-30-701	
												FSC	Q	1-SI-30-901-A	
												STC	Q	1-SI-30-901-A	
1-FCV-30-14	CNTMT LOWER COMPARTMENT PURGE SUPPLY	1-47W866-1 / E-1	A	ACT	2	24	BF	AO	O/C	C	C	RPI	2Y	1-SI-30-902-A	
												LTJ	AppJ	1-SI-30-701	
												FSC	Q	1-SI-30-901-A	
												STC	Q	1-SI-30-901-A	
1-FCV-30-15	CNTMT LOWER COMPARTMENT PURGE SUPPLY	1-47W866-1 / E-2	A	ACT	2	24	BF	AO	O/C	C	C	RPI	2Y	1-SI-30-902-B	
												LTJ	AppJ	1-SI-30-701	
												FSC	Q	1-SI-30-901-B	
												STC	Q	1-SI-30-901-B	
1-FCV-30-16	CNTMT LOWER COMPARTMENT PURGE SUPPLY	1-47W866-1 / E-1	A	ACT	2	24	BF	AO	O/C	C	C	RPI	2Y	1-SI-30-902-B	
												LTJ	AppJ	1-SI-30-701	
												FSC	Q	1-SI-30-901-B	
												STC	Q	1-SI-30-901-B	
1-FCV-30-17	CNTMT LOWER COMPARTMENT PURGE SUPPLY	1-47W866-1 / E-2	A	ACT	2	24	BF	AO	O/C	C	C	RPI	2Y	1-SI-30-902-A	
												LTJ	AppJ	1-SI-30-701	
												FSC	Q	1-SI-30-901-A	
												STC	Q	1-SI-30-901-A	

Appendix B - Valve Test Plan

VALVE ID	FUNCTION	DRAWING/COOR	CAT	ACT/ PASS	CLASS	SIZE	TYPE	ACT	POSITION			TEST REQ	FREQ	PROCEDURE	NOTES
									NORM	SAFE	FAIL				
1-FCV-30-19	CNTMT INCORE INSTR ROOM PURGE SUPPLY	1-47W866-1 / G-1	A	ACT	2	12	BF	AO	O/C	C	C	RPI	2Y	1-SI-30-902-B	
												LTJ	AppJ	1-SI-30-701	
												FSC	Q	1-SI-30-901-B	
												STC	Q	1-SI-30-901-B	
1-FCV-30-20	CNTMT INCORE INSTR ROOM PURGE SUPPLY	1-47W866-1 / G-2	A	ACT	2	12	BF	AO	O/C	C	C	RPI	2Y	1-SI-30-902-A	
												LTJ	AppJ	1-SI-30-701	
												FSC	Q	1-SI-30-901-A	
												STC	Q	1-SI-30-901-A	
1-FCV-30-37	CNTMT LOWER COMPARTMENT PURGE EXH PRESS RELIEF	1-47W866-1 / D-10	A	ACT	2	8	BF	AO	O	C	C	RPI	2Y	1-SI-30-902-B	
												LTJ	AppJ	1-SI-30-701	
												FSC	Q	1-SI-30-901-B	
												STC	Q	1-SI-30-901-B	
1-FCV-30-40	CNTMT LOWER COMPARTMENT PURGE EXH PRESS RELIEF	1-47W866-1 / D-9	A	ACT	2	8	BF	AO	O	C	C	RPI	2Y	1-SI-30-902-A	
												LTJ	AppJ	1-SI-30-701	
												FSC	Q	1-SI-30-901-A	
												STC	Q	1-SI-30-901-A	

Appendix B - Valve Test Plan

VALVE ID	FUNCTION	DRAWING/COOR	CAT	ACT/ PASS	CLASS	SIZE	TYPE	ACT	POSITION			TEST REQ	FREQ	PROCEDURE	NOTES
									NORM	SAFE	FAIL				
1-FCV-30-50	CNTMT UPPER COMPARTMENT EXHAUST ISOLATION	1-47W866-1 / C-9	A	ACT	2	24	BF	AO	O/C	C	C	RPI	2Y	1-SI-30-902-B	
												LTJ	AppJ	1-SI-30-701	
												FSC	Q	1-SI-30-901-B	
												STC	Q	1-SI-30-901-B	
1-FCV-30-51	CNTMT UPPER COMPARTMENT EXHAUST ISOLATION	1-47W866-1 / C-10	A	ACT	2	24	BF	AO	O/C	C	C	RPI	2Y	1-SI-30-902-A	
												LTJ	AppJ	1-SI-30-701	
												FSC	Q	1-SI-30-901-A	
												STC	Q	1-SI-30-901-A	
1-FCV-30-52	CNTMT UPPER COMPARTMENT EXHAUST ISOLATION	1-47W866-1 / C-9	A	ACT	2	24	BF	AO	O/C	C	C	RPI	2Y	1-SI-30-902-A	
												LTJ	AppJ	1-SI-30-701	
												FSC	Q	1-SI-30-901-A	
												STC	Q	1-SI-30-901-A	
1-FCV-30-53	CNTMT UPPER COMPARTMENT EXHAUST ISOLATION	1-47W866-1 / C-10	A	ACT	2	24	BF	AO	O/C	C	C	RPI	2Y	1-SI-30-902-B	
												LTJ	AppJ	1-SI-30-701	
												FSC	Q	1-SI-30-901-B	
												STC	Q	1-SI-30-901-B	

Appendix B - Valve Test Plan

VALVE ID	FUNCTION	DRAWING/COOR	CAT	ACT/ PASS	CLASS	SIZE	TYPE	ACT	POSITION			TEST REQ	FREQ	PROCEDURE	NOTES
									NORM	SAFE	FAIL				
1-FCV-30-56	CNTMT LOWER COMPARTMENT EXHAUST ISOLATION	1-47W866-1 / E-9	A	ACT	2	24	BF	AO	O/C	C	C	RPI	2Y	1-SI-30-902-A	
												LTJ	AppJ	1-SI-30-701	
												FSC	Q	1-SI-30-901-A	
												STC	Q	1-SI-30-901-A	
1-FCV-30-57	CNTMT LOWER COMPARTMENT EXHAUST ISOLATION	1-47W866-1 / E-10	A	ACT	2	24	BF	AO	O/C	C	C	RPI	2Y	1-SI-30-902-B	
												LTJ	AppJ	1-SI-30-701	
												FSC	Q	1-SI-30-901-B	
												STC	Q	1-SI-30-901-B	
1-FCV-30-58	CNTMT INSTRUMENT ROOM EXHAUST ISOLATION	1-47W866-1 / G-9	A	ACT	2	12	BF	AO	O/C	C	C	RPI	2Y	1-SI-30-902-B	
												LTJ	AppJ	1-SI-30-701	
												FSC	Q	1-SI-30-901-B	
												STC	Q	1-SI-30-901-B	
1-FCV-30-59	CNTMT INSTRUMENT ROOM EXHAUST ISOLATION	1-47W866-1 / G-10	A	ACT	2	12	BF	AO	O/C	C	C	RPI	2Y	1-SI-30-902-A	
												LTJ	AppJ	1-SI-30-701	
												FSC	Q	1-SI-30-901-A	
												STC	Q	1-SI-30-901-A	

Appendix B - Valve Test Plan

VALVE ID	FUNCTION	DRAWING/COOR	CAT	ACT/ PASS	CLASS	SIZE	TYPE	ACT	POSITION			TEST REQ	FREQ	PROCEDURE	NOTES
									NORM	SAFE	FAIL				
1-FSV-30-134	CONTAINMENT ANNULUS DIFF PRESSURE ISOLATION	1-47W866-1 / F-9	A	ACT	2	0.5	GA	SO	O	C	C	RPI	2Y	1-SI-30-902-B	
												LTJ	AppJ	1-SI-30-701-A	
												FSC	Q	1-SI-30-901-B	
												STC	Q	1-SI-30-901-B	
1-FSV-30-135	CONTAINMENT ANNULUS DIFF PRESSURE ISOLATION	1-47W866-1 / F-10	A	ACT	2	0.5	GA	SO	O	C	C	RPI	2Y	1-SI-30-902-A	
												LTJ	AppJ	1-SI-30-701-A	
												FSC	Q	1-SI-30-901-A	
												STC	Q	1-SI-30-901-A	
1-TV-30-554	CNTMT PURGE AIR EXHAUST TEST CONNECTION	1-47W866-1 / G-9	A	PASS	2	0.75	GA	M	LC	C	N/A	LTJ	AppJ		
1-TV-30-555	CNTMT PURGE AIR EXHAUST TEST CONNECTION	1-47W866-1 / E-9	A	PASS	2	0.75	GA	M	LC	C	N/A	LTJ	AppJ		
1-TV-30-556	CNTMT PURGE AIR EXHAUST TEST CONNECTION	1-47W866-1 / D-9	A	PASS	2	0.75	GA	M	LC	C	N/A	LTJ	AppJ		
1-TV-30-557	CNTMT PURGE AIR EXHAUST TEST CONNECTION	1-47W866-1 / C-9	A	PASS	2	0.75	GA	M	LC	C	N/A	LTJ	AppJ		
1-TV-30-558	CNTMT PURGE AIR EXHAUST TEST CONNECTION	1-47W866-1 / C-9	A	PASS	2	0.75	GA	M	LC	C	N/A	LTJ	AppJ		
1-TV-30-559	CNTMT PURGE AIR SUPPLY TEST CONNECTION	1-47W866-1 / G-2	A	PASS	2	0.75	GA	M	LC	C	N/A	LTJ	AppJ		
1-TV-30-560	CNTMT PURGE AIR SUPPLY TEST CONNECTION	1-47W866-1 / E-2	A	PASS	2	0.75	GA	M	LC	C	N/A	LTJ	AppJ		

Appendix B - Valve Test Plan

VALVE ID	FUNCTION	DRAWING/COOR	CAT	ACT/ PASS	CLASS	SIZE	TYPE	ACT	POSITION			TEST REQ	FREQ	PROCEDURE	NOTES
									NORM	SAFE	FAIL				
1-TV-30-561	CNTMT PURGE AIR SUPPLY TEST CONNECTION	1-47W866-1 / E-2	A	PASS	2	0.75	GA	M	LC	C	N/A	LTJ	AppJ		
1-TV-30-562	CNTMT PURGE AIR SUPPLY TEST CONNECTION	1-47W866-1 / C-2	A	PASS	2	0.75	GA	M	LC	C	N/A	LTJ	AppJ		
1-TV-30-563	CNTMT PURGE AIR SUPPLY TEST CONNECTION	1-47W866-1 / C-2	A	PASS	2	0.75	GA	M	LC	C	N/A	LTJ	AppJ		
1-FCV-31-305	INCORE INSTR RM AHU 1A CWR ISOL	1-47W865-5 / B-7	A	ACT	2	2	GL	AO	O	C	C	RPI	2Y	1-SI-31-901-A	
												LTJ	AppJ	1-SI-31-701	
												FSC	Q		
												STC	Q	1-SI-31-901-A	
1-FCV-31-306	INCORE INSTR RM AHU 1A CWR ISOL	1-47W865-5 / B-7	A	ACT	2	2	GL	AO	O	C	C	RPI	2Y	1-SI-31-901-A	
												LTJ	AppJ	1-SI-31-701	
												FSC	Q		
												STC	Q	1-SI-31-901-A	
1-FCV-31-308	INCORE INSTR RM AHU 1A CWS ISOL	1-47W865-5 / C-7	A	ACT	2	2	GL	AO	O	C	C	RPI	2Y	1-SI-31-901-A	
												LTJ	AppJ	1-SI-31-701	
												FSC	Q		
												STC	Q	1-SI-31-901-A	
1-FCV-31-309	INCORE INSTR RM AHU 1A CWS ISOL	1-47W865-5 / C-7	A	ACT	2	2	GL	AO	O	C	C	RPI	2Y	1-SI-31-901-A	
												LTJ	AppJ	1-SI-31-701	
												FSC	Q		
												STC	Q	1-SI-31-901-A	

Appendix B - Valve Test Plan

VALVE ID	FUNCTION	DRAWING/COOR	CAT	ACT/ PASS	CLASS	SIZE	TYPE	ACT	POSITION			TEST REQ	FREQ	PROCEDURE	NOTES
									NORM	SAFE	FAIL				
1-FCV-31-326	INCORE INSTR RM AHU 1B CWR ISOL	1-47W865-5 / E-7	A	ACT	2	2	GL	AO	O	C	C	RPI	2Y	1-SI-31-901-B	
												LTJ	AppJ	1-SI-31-701	
												FSC	Q		
												STC	Q	1-SI-31-901-B	
1-FCV-31-327	INCORE INSTR RM AHU 1B CWR ISOL	1-47W865-5 / E-7	A	ACT	2	2	GL	AO	O	C	C	RPI	2Y	1-SI-31-901-B	
												LTJ	AppJ	1-SI-31-701	
												FSC	Q		
												STC	Q	1-SI-31-901-B	
1-FCV-31-329	INCORE INSTR RM AHU 1B CWS ISOL	1-47W865-5 / F-7	A	ACT	2	2	GL	AO	O	C	C	RPI	2Y	1-SI-31-901-B	
												LTJ	AppJ	1-SI-31-701	
												FSC	Q		
												STC	Q	1-SI-31-901-B	
1-FCV-31-330	INCORE INSTR RM AHU 1B CWS ISOL	1-47W865-5 / F-7	A	ACT	2	2	GL	AO	O	C	C	RPI	2Y	1-SI-31-901-B	
												LTJ	AppJ	1-SI-31-701	
												FSC	Q		
												STC	Q	1-SI-31-901-B	
1-CKV-31-3378	INCORE INSTR RM AHU 1B CWS LEAK RATE CHECK	1-47W865-5 / F-7	A/C	ACT	2	0.5	CK	SA	C	O/C	N/A	LTJ	AppJ	1-SI-31-701	
												CM	CM	1-SI-31-701 1-SI-31-902	
1-CKV-31-3392	INCORE INSTR RM AHU 1B CWR LEAK RATE CHECK	1-47W865-5 / E-7	A/C	ACT	2	0.5	CK	SA	C	O/C	N/A	LTJ	AppJ	1-SI-31-701	
												CM	CM	1-SI-31-701 1-SI-31-902	

Appendix B - Valve Test Plan

VALVE ID	FUNCTION	DRAWING/COOR	CAT	ACT/ PASS	CLASS	SIZE	TYPE	ACT	POSITION			TEST REQ	FREQ	PROCEDURE	NOTES
									NORM	SAFE	FAIL				
1-CKV-31-3407	INCORE INSTR RM AHU 1A CWS LEAK RATE CHECK	1-47W865-5 / C-7	A/C	ACT	2	0.5	CK	SA	C	O/C	N/A	LTJ	AppJ	1-SI-31-701	
												CM	CM	1-SI-31-701 1-SI-31-902	
1-CKV-31-3421	INCORE INSTR RM AHU 1A CWR LEAK RATE CHECK	1-47W865-5 / B-7	A/C	ACT	2	0.5	CK	SA	C	O/C	N/A	LTJ	AppJ	1-SI-31-701	
												CM	CM	1-SI-31-701 1-SI-31-902	
1-FCV-32-80	ESSENT CONTROL AIR TR A CNTMT ISOL	0-47W848-1 / C-9	A	ACT	2	2	GL	AO	O	C	C	RPI	2Y	1-SI-32-901-A	
												LTJ	AppJ	1-SI-32-701	
												FSC	CSD	1-SI-32-901-A	DTJ-09
												STC	CSD	1-SI-32-901-A	DTJ-09
1-FCV-32-102	ESSENT CONTROL AIR TR B CNTMT ISOL	0-47W848-1 / D-9	A	ACT	2	2	GL	AO	O	C	C	RPI	2Y	1-SI-32-901-B	
												LTJ	AppJ	1-SI-32-701	
												FSC	CSD	1-SI-32-901-B	DTJ-09
												STC	CSD	1-SI-32-901-B	DTJ-09
1-FCV-32-110	CONTROL AIR CNTMT ISOL	0-47W848-1 / A-9	A	ACT	2	2	GL	AO	O	C	C	RPI	2Y	1-SI-32-901-A	
												LTJ	AppJ	1-SI-32-701	
												FSC	CSD	1-SI-32-901-A	DTJ-09
												STC	CSD	1-SI-32-901-A	DTJ-09
1-BYV-32-288	CONTROL AIR 1-FCV-32-110 BYPASS	0-47W848-1 / A-9	A	PASS	2	2	GL	M	LC	C	N/A	LTJ	AppJ	1-SI-32-701	
1-CKV-32-293	CONTROL AIR CNTMT CHECK	0-47W848-1 / A-9	A/C	ACT	2	2	CK	SA	O	C	N/A	LTJ	AppJ	1-SI-32-701	
												CM	CM	1-SI-32-701	

Appendix B - Valve Test Plan

VALVE ID	FUNCTION	DRAWING/COOR	CAT	ACT/ PASS	CLASS	SIZE	TYPE	ACT	POSITION			TEST REQ	FREQ	PROCEDURE	NOTES
									NORM	SAFE	FAIL				
1-BYV-32-298	ESSENT CONTROL AIR 1-FCV-32-80 BYPASS	0-47W848-1 / C-9	A	PASS	2	2	GL	M	LC	C	N/A	LTJ	AppJ	1-SI-32-701	
1-CKV-32-303	ESSENT CNTL AIR CNTMT CHECK	0-47W848-1 / C-9	A/C	ACT	2	2	CK	SA	O	C	N/A	LTJ CM	AppJ CM	1-SI-32-701 1-SI-32-701	
1-BYV-32-308	ESSENT CONTROL AIR 1-FCV-32-102 BYPASS	0-47W848-1 / D-9	A	PASS	2	2	GL	M	LC	C	N/A	LTJ	AppJ	1-SI-32-701	
1-CKV-32-313	ESSENT CNTL AIR CNTMT CHECK	0-47W848-1 / D-9	A/C	ACT	2	2	CK	SA	O	C	N/A	LTJ CM	AppJ CM	1-SI-32-701 1-SI-32-701	
1-CKV-32-9211	DOWNSTREAM CKV VLV FOR AIR LINE TO 1-LCV-3-172 & -175	0-47W848-10 / G-5	A/C	ACT	3	0.5	CK	SA	C	O/C	N/A	LTP CVC CVO	2Y RO RO		 DTJ-33 DTJ-33
1-CKV-32-9212	UPSTREAM CKV VLV FOR N2 LINE TO 1-LCV-3-172 & -175	1-47W830-12 / F-4	A/C	ACT	3	0.5	CK	SA	C	C	N/A	LTP CVC BDO	2Y RO RO		 DTJ-34 DTJ-34
1-CKV-32-9213	DOWNSTREAM CKV VLV FOR N2 LINE TO 1-LCV-3-172 & -175	1-47W830-12 / F-5	A/C	ACT	3	0.5	CK	SA	C	C	N/A	LTP CVC BDO	2Y RO RO		 DTJ-34 DTJ-34

Appendix B - Valve Test Plan

VALVE ID	FUNCTION	DRAWING/COOR	CAT	ACT/ PASS	CLASS	SIZE	TYPE	ACT	POSITION			TEST REQ	FREQ	PROCEDURE	NOTES
									NORM	SAFE	FAIL				
1-CKV-32-9221	DOWNSTREAM CKV VLV FOR AIR LINE TO 1-LCV-3 -173 & -174	0-47W848-10 / C-4	A/C	ACT	3	0.5	CK	SA	C	O/C	N/A	LTP	2Y		
												CVC	RO		DTJ-33
												CVO	RO		DTJ-33
1-CKV-32-9222	UPSTREAM CKV VLV FOR N2 LINE TO 1-LCV-3-173 & -174	1-47W830-12 / E-4	A/C	ACT	3	0.5	CK	SA	C	C	N/A	LTP	2Y		
												CVC	RO		DTJ-34
												BDO	RO		DTJ-34
1-CKV-32-9223	DOWNSTREAM CKV VLV FOR N2 LINE TO 1-LCV-3-173 & -174	1-47W830-12 / E-5	A/C	ACT	3	0.5	CK	SA	C	C	N/A	LTP	2Y		
												CVC	RO		DTJ-34
												BDO	RO		DTJ-34
1-CKV-32-9230	UPSTREAM CKV VLV FOR AIR LINE TO 1-LCV-3-148 & -148A	0-47W848-10 / D-3	A/C	ACT	3	0.5	CK	SA	C	O/C	N/A	LTP	2Y		
												CVC	RO		DTJ-33
												CVO	RO		DTJ-33
1-CKV-32-9231	DOWNSTREAM CKV VLV FOR AIR LINE TO 1-LCV-3 -148 & -148A	0-47W848-10 / D-3	A/C	ACT	3	0.5	CK	SA	C	O/C	N/A	LTP	2Y		
												CVC	RO		DTJ-33
												CVO	RO		DTJ-33

Appendix B - Valve Test Plan

VALVE ID	FUNCTION	DRAWING/COOR	CAT	ACT/ PASS	CLASS	SIZE	TYPE	ACT	POSITION			TEST REQ	FREQ	PROCEDURE	NOTES
									NORM	SAFE	FAIL				
1-CKV-32-9232	UPSTREAM CKV VLV FOR N2 TO 1-LCV-3-148 & -148A	1-47W830-12 / B-9	A/C	ACT	3	0.5	CK	SA	C	C	N/A	LTP	2Y		
												CVC	RO		DTJ-34
												BDO	RO		DTJ-34
1-CKV-32-9233	DOWNSTREAM CKV VLV FOR N2 TO 1-LCV-3-148 & -148A	1-47W830-12 / B-9	A/C	ACT	3	0.5	CK	SA	C	C	N/A	LTP	2Y		
												CVC	RO		DTJ-34
												BDO	RO		DTJ-34
1-CKV-32-9240	UPSTREAM CHECK VLV FOR AIR LINE TO 1-LCV-3 -156 & -156A	0-47W848-10 / G-3	A/C	ACT	3	0.5	CK	SA	C	O/C	N/A	LTP	2Y		
												CVC	RO		DTJ-33
												CVO	RO		DTJ-33
1-CKV-32-9241	DOWNSTREAM CKV VLV FOR AIR LINE TO 1-LCV-3 -156 & -156A	0-47W848-10 / G-3	A/C	ACT	3	0.5	CK	SA	C	O/C	N/A	LTP	2Y		
												CVC	RO		DTJ-33
												CVO	RO		DTJ-33
1-CKV-32-9242	UPSTREAM CKV VLV FOR N2 LINE TO 1-LCV-3-156 & -156A	1-47W830-12 / C-9	A/C	ACT	3	0.5	CK	SA	C	C	N/A	LTP	2Y		
												CVC	RO		DTJ-34
												BDO	RO		DTJ-34

Appendix B - Valve Test Plan

VALVE ID	FUNCTION	DRAWING/COOR	CAT	ACT/ PASS	CLASS	SIZE	TYPE	ACT	POSITION			TEST REQ	FREQ	PROCEDURE	NOTES
									NORM	SAFE	FAIL				
1-CKV-32-9243	DOWNSTREAM CKV VLV FOR N2 LINE TO 1-LCV-3-156 & -156A	1-47W830-12 / C-9	A/C	ACT	3	0.5	CK	SA	C	C	N/A	LTP	2Y		
												CVC	RO		DTJ-34
												BDO	RO		DTJ-34
1-CKV-32-9250	UPSTREAM CKV VLV FOR AIR LINE TO 1-PCV-3-122	0-47W848-10 / G-3	A/C	ACT	3	0.5	CK	SA	C	O/C	N/A	LTP	2Y		
												CVC	RO		DTJ-33
												CVO	RO		DTJ-33
1-CKV-32-9251	DOWNSTREAM CKV VLV FOR AIR LINE TO 1-PCV-3-122	0-47W848-10 / G-3	A/C	ACT	3	0.5	CK	SA	C	O/C	N/A	LTP	2Y		
												CVC	RO		DTJ-33
												CVO	RO		DTJ-33
1-CKV-32-9252	UPSTREAM CKV VLV FOR N2 LINE TO 1-PCV-3-122	1-47W830-12 / B-4	A/C	ACT	3	0.5	CK	SA	C	C	N/A	LTP	2Y		
												CVC	RO		DTJ-34
												BDO	RO		DTJ-34
1-CKV-32-9253	DOWNSTREAM CKV VLV FOR N2 LINE TO 1-PCV-3-122	1-47W830-12 / B-5	A/C	ACT	3	0.5	CK	SA	C	C	N/A	LTP	2Y		
												CVC	RO		DTJ-34
												BDO	RO		DTJ-34

Appendix B - Valve Test Plan

VALVE ID	FUNCTION	DRAWING/COOR	CAT	ACT/ PASS	CLASS	SIZE	TYPE	ACT	POSITION			TEST REQ	FREQ	PROCEDURE	NOTES
									NORM	SAFE	FAIL				
1-CKV-32-9260	UPSTREAM CKV VLV FOR AIR LINE TO LINE TO 1-PCV-3-132	0-47W848-10 / C-2	A/C	ACT	3	0.5	CK	SA	C	O/C	N/A	LTP	2Y		
												CVC	RO		DTJ-33
												CVO	RO		DTJ-33
1-CKV-32-9261	DOWNSTREAM CKV VLV FOR AIR LINE TO 1-PCV-3-132	0-47W848-10 / C-1	A/C	ACT	3	0.5	CK	SA	C	O/C	N/A	LTP	2Y		
												CVC	RO		DTJ-33
												CVO	RO		DTJ-33
1-CKV-32-9262	UPSTREAM CKV VLV FOR N2 LINE TO 1-PCV-3-132	1-47W830-12 / B-4	A/C	ACT	3	0.5	CK	SA	C	C	N/A	LTP	2Y		
												CVC	RO		DTJ-34
												BDO	RO		DTJ-34
1-CKV-32-9263	DOWNSTREAM CKV VLV FOR N2 LINE TO 1-PCV-3-132	1-47W830-12 / B-5	A/C	ACT	3	0.5	CK	SA	C	C	N/A	LTP	2Y		
												CVC	RO		DTJ-34
												BDO	RO		DTJ-34
1-CKV-32-9270	UPSTREAM CKV VLV FOR AIR LINE TO 1-LCV-3-164 & -164A	0-47W848-10 / H-3	A/C	ACT	3	0.5	CK	SA	C	O/C	N/A	LTP	2Y		
												CVC	RO		DTJ-33
												CVO	RO		DTJ-33

Appendix B - Valve Test Plan

VALVE ID	FUNCTION	DRAWING/COOR	CAT	ACT/ PASS	CLASS	SIZE	TYPE	ACT	POSITION			TEST REQ	FREQ	PROCEDURE	NOTES
									NORM	SAFE	FAIL				
1-CKV-32-9271	DOWNSTREAM CHECK VALVE FOR AIR LINE TO 1-LCV-3-164 & -164A	0-47W848-10 / H-3	A/C	ACT	3	0.5	CK	SA	C	O/C	N/A	LTP	2Y		
												CVC	RO		DTJ-33
												CVO	RO		DTJ-33
1-CKV-32-9272	UPSTREAM CKV VLV FOR N2 LINE TO 1-LCV-3-171 & -171A	1-47W830-12 / B-6	A/C	ACT	3	0.5	CK	SA	C	C	N/A	LTP	2Y		
												CVC	RO		DTJ-34
												BDO	RO		DTJ-34
1-CKV-32-9273	DOWNSTREAM CKV VLV FOR N2 LINE TO 1-LCV-3-171 & -171A	1-47W830-12 / B-7	A/C	ACT	3	0.5	CK	SA	C	C	N/A	LTP	2Y		
												CVC	RO		DTJ-34
												BDO	RO		DTJ-34
1-CKV-32-9280	UPSTREAM CKV VLV FOR AIR LINE TO 1-LCV-3-171 & 171A	0-47W848-10 / D-3	A/C	ACT	3	0.5	CK	SA	C	O/C	N/A	LTP	2Y		
												CVC	RO		DTJ-33
												CVO	RO		DTJ-33
1-CKV-32-9281	DOWNSTREAM CKV VLV FOR AIR LINE TO 1-LCV-3 -171 & -171A	0-47W848-10 / D-3	A/C	ACT	3	0.5	CK	SA	C	O/C	N/A	LTP	2Y		
												CVC	RO		DTJ-33
												CVO	RO		DTJ-33

Appendix B - Valve Test Plan

VALVE ID	FUNCTION	DRAWING/COOR	CAT	ACT/ PASS	CLASS	SIZE	TYPE	ACT	POSITION			TEST REQ	FREQ	PROCEDURE	NOTES
									NORM	SAFE	FAIL				
1-CKV-32-9282	UPSTREAM CKV VLV FOR N2 LINE TO 1-LCV-3-164 & -164A	1-47W830-12 / D-6	A/C	ACT	3	0.5	CK	SA	C	C	N/A	LTP	2Y		
												CVC	RO		DTJ-34
												BDO	RO		DTJ-34
1-CKV-32-9283	DOWNSTREAM CKV VLV FOR N2 LINE TO 1-LCV-3-164 & 164A	1-47W830-12 / D-7	A/C	ACT	3	0.5	CK	SA	C	C	N/A	LTP	2Y		
												CVC	RO		DTJ-34
												BDO	RO		DTJ-34
1-ISV-33-713	SERVICE AIR U1 RX BLDG HDR ISOL	0-47W846-2 / F-5	A	PASS	2	2	DIA	M	LC	C	N/A	LTJ	AppJ	1-SI-33-701	
1-ISV-33-714	SERVICE AIR U1 RX BLDG HDR ISOL	0-47W846-2 / F-6	A	PASS	2	2	DIA	M	LC	C	N/A	LTJ	AppJ	1-SI-33-701	
1-FCV-43-2	PRESSURIZER GAS SAMPLE ISOL	1-47W625-1 / D-3	A	ACT	2	0.375	GL	SO	O/C	C	C	RPI	2Y	1-SI-43-902-B	
												LTJ	AppJ	1-SI-43-701-B	
												FSC	Q	1-SI-43-901-B 1-SI-43-902-B	
												STC	Q	1-SI-43-901-B 1-SI-43-902-B	
1-FCV-43-3	PRESSURIZER GAS SAMPLE ISOL	1-47W625-1 / D-5	A	ACT	2	0.375	GL	AO	O/C	C	C	RPI	2Y	1-SI-43-902-B	
												LTJ	AppJ	1-SI-43-701-B	
												FSC	Q	1-SI-43-901-A 1-SI-43-902-B	
												STC	Q	1-SI-43-901-A 1-SI-43-902-B	
1-FCV-43-11	PRESSURIZER LIQUID SAMPLE ISOL	1-47W625-1 / B-2	A	ACT	2	0.375	GL	SO	O/C	C	C	RPI	2Y	1-SI-43-902-B	
												LTJ	AppJ	1-SI-43-701-B	
												FSC	Q	1-SI-43-901-B 1-SI-43-902-B	
												STC	Q	1-SI-43-901-B 1-SI-43-902-B	

Appendix B - Valve Test Plan

VALVE ID	FUNCTION	DRAWING/COOR	CAT	ACT/ PASS	CLASS	SIZE	TYPE	ACT	POSITION			TEST REQ	FREQ	PROCEDURE	NOTES
									NORM	SAFE	FAIL				
1-FCV-43-12	PRESSURIZER LIQUID SAMPLE ISOL	1-47W625-1 / B-4	A	ACT	2	0.375	GL	AO	O/C	C	C	RPI	2Y	1-SI-43-902-B	
												LTJ	AppJ	1-SI-43-701-B	
												FSC	Q	1-SI-43-901-A 1-SI-43-902-B	
												STC	Q	1-SI-43-901-A 1-SI-43-902-B	
1-FCV-43-22	HOT LEGS 1/3 SAMPLE ISOL	1-47W625-1 / F-5	A	ACT	2	0.375	GL	SO	O/C	C	C	RPI	2Y	1-SI-43-902-B	
												LTJ	AppJ	1-SI-43-701-B	
												FSC	Q	1-SI-43-901-B 1-SI-43-902-B	
												STC	Q	1-SI-43-901-B 1-SI-43-902-B	
1-FCV-43-23	HOT LEGS 1/3 SAMPLE ISOL	1-47W625-1 / D-5	A	ACT	2	0.375	GL	AO	O/C	C	C	RPI	2Y	1-SI-43-902-B	
												LTJ	AppJ	1-SI-43-701-B	
												FSC	Q	1-SI-43-901-A 1-SI-43-902-B	
												STC	Q	1-SI-43-901-A 1-SI-43-902-B	
1-FCV-43-34	ACCUM TANK SAMPLE HDR ISOL	1-47W625-2 / B-2	A	ACT	2	0.375	GL	SO	O/C	C	C	RPI	2Y	1-SI-43-902-B	
												LTJ	AppJ	1-SI-43-701-B	
												FSC	Q	1-SI-43-901-B 1-SI-43-902-B	
												STC	Q	1-SI-43-901-B 1-SI-43-902-B	
1-FCV-43-35	ACCUM TANK SAMPLE HDR ISOL	1-47W625-2 / C-4	A	ACT	2	0.375	GL	AO	O/C	C	C	RPI	2Y	1-SI-43-902-B	
												LTJ	AppJ	1-SI-43-701-B	
												FSC	Q	1-SI-43-901-A 1-SI-43-902-B	
												STC	Q	1-SI-43-901-A 1-SI-43-902-B	
1-FCV-43-55	STEAM GEN 1 DRUM/BLDN SAMPLE ISOL	1-47W625-2 / C-6	B	ACT	2	0.375	GL	AO	O/C	C	C	RPI	2Y	1-SI-43-902-A	
												FSC	Q	1-SI-43-901-A 1-SI-43-902-A	
												STC	Q	1-SI-43-902-A	

Appendix B - Valve Test Plan

VALVE ID	FUNCTION	DRAWING/COOR	CAT	ACT/ PASS	CLASS	SIZE	TYPE	ACT	POSITION			TEST REQ	FREQ	PROCEDURE	NOTES
									NORM	SAFE	FAIL				
1-FCV-43-58	STEAM GEN 2 DRUM/BLDN SAMPLE ISOL	1-47W625-2 / C-6	B	ACT	2	0.375	GL	AO	O/C	C	C	RPI FSC STC	2Y Q Q	1-SI-43-902-A 1-SI-43-901-A 1-SI-43-902-A 1-SI-43-901-A 1-SI-43-902-A	
1-FCV-43-61	STEAM GEN 3 DRUM/BLDN SAMPLE ISOL	1-47W625-2 / D-7	B	ACT	2	0.375	GL	AO	O/C	C	C	RPI FSC STC	2Y Q Q	1-SI-43-902-A 1-SI-43-901-A 1-SI-43-902-A 1-SI-43-901-A 1-SI-43-902-A	
1-FCV-43-64	STEAM GEN 4 DRUM/BLDN SAMPLE ISOL	1-47W625-2 / E-8	B	ACT	2	0.375	GL	AO	O/C	C	C	RPI FSC STC	2Y Q Q	1-SI-43-902-A 1-SI-43-901-A 1-SI-43-902-A 1-SI-43-901-A 1-SI-43-902-A	
1-FCV-43-75	DS EXCESS LTDN HX SAMPLE ISOL	1-47W625-7 / E-7	A	ACT	2	0.375	GL	SO	O/C	C	C	RPI LTJ FSC STC	2Y AppJ Q Q	1-SI-43-701-B 1-SI-43-902-B 1-SI-43-701-B 1-SI-43-901-B 1-SI-43-902-B 1-SI-43-901-B 1-SI-43-902-B	
1-FCV-43-77	EXCESS LTDN HX SAMPLE ISOL	1-47W625-7 / E-8	A	ACT	2	0.375	GL	AO	O/C	C	C	RPI LTJ FSC STC	2Y AppJ Q Q	1-SI-43-701-B 1-SI-43-902-B 1-SI-43-701-B 1-SI-43-901-A 1-SI-43-902-B 1-SI-43-901-A 1-SI-43-902-B	
1-FCV-43-201	LOCA H2 CNTMT MONITOR INLET ISOL	1-47W625-11 / F-5	A	ACT	2	0.375	GL	SO	O/C	C	C	RPI LTJ FSC STC	2Y AppJ Q Q	1-SI-43-902-A 1-SI-43-701-B 1-SI-43-901-A 1-SI-43-902-A 1-SI-43-901-A 1-SI-43-902-A	

Appendix B - Valve Test Plan

VALVE ID	FUNCTION	DRAWING/COOR	CAT	ACT/ PASS	CLASS	SIZE	TYPE	ACT	POSITION			TEST REQ	FREQ	PROCEDURE	NOTES
									NORM	SAFE	FAIL				
1-FCV-43-202	LOCA H2 CNTMT MONITOR OUTLET ISOL	1-47W625-11 / F-5	A	ACT	2	0.375	GL	SO	O/C	C	C	RPI LTJ FSC STC	2Y AppJ Q Q	1-SI-43-902-A 1-SI-43-701-B 1-SI-43-901-A 1-SI-43-902-A 1-SI-43-901-A 1-SI-43-902-A	
1-FCV-43-207	LOCA H2 CNTMT MONITOR INLET ISOL	1-47W625-11 / D-6	A	ACT	2	0.375	GL	SO	O/C	C	C	RPI LTJ FSC STC	2Y AppJ Q Q	1-SI-43-902-B 1-SI-43-701-B 1-SI-43-901-B 1-SI-43-902-B 1-SI-43-901-B 1-SI-43-902-B	
1-FCV-43-208	LOCA H2 CNTMT MONITOR OUTLET ISOL	1-47W625-11 / C-6	A	ACT	2	0.375	GL	SO	O/C	C	C	RPI LTJ FSC STC	2Y AppJ Q Q	1-SI-43-902-B 1-SI-43-701-B 1-SI-43-901-B 1-SI-43-902-B 1-SI-43-901-B 1-SI-43-902-B	
1-FSV-43-250	PAS HOT LEG 1 SAMPLE ISOL	1-47W625-15 / D-1	A	PASS	2	0.375	GL	SO	C	C	C	RPI LTJ	2Y AppJ	1-SI-43-701-A 1-SI-43-902-A 1-SI-43-701-A	
1-FSV-43-251	PAS HOT LEG 1 SAMPLE ISOL	1-47W625-15 / C-1	A	PASS	2	0.375	GL	SO	C	C	C	RPI LTJ	2Y AppJ	1-SI-43-701-A 1-SI-43-902-A 1-SI-43-701-A	
1-FSV-43-287	PAS CONTAINMENT AIR SUPPLY ISOL	1-47W625-15 / B-8	A	PASS	2	0.375	GL	SO	C	C	C	RPI LTJ	2Y AppJ	1-SI-43-701-A 1-SI-43-902-A 1-SI-43-701-A	
1-FSV-43-288	PAS CONTAINMENT AIR SUPPLY ISOL	1-47W625-15 / B-8	A	PASS	2	0.375	GL	SO	C	C	C	RPI LTJ	2Y AppJ	1-SI-43-701-A 1-SI-43-902-A 1-SI-43-701-A	
1-FSV-43-307	PAS CONTAINMENT AIR RETURN ISOL	1-47W625-15 / B-9	A	PASS	2	0.375	GL	SO	C	C	C	RPI LTJ	2Y AppJ	1-SI-43-701-A 1-SI-43-902-A 1-SI-43-701-A	

Appendix B - Valve Test Plan

VALVE ID	FUNCTION	DRAWING/COOR	CAT	ACT/ PASS	CLASS	SIZE	TYPE	ACT	POSITION			TEST REQ	FREQ	PROCEDURE	NOTES
									NORM	SAFE	FAIL				
1-FSV-43-309	PAS HOT LEG 3 SAMPLE ISOL	1-47W625-15 / D-2	A	PASS	2	0.375	GL	SO	C	C	C	RPI LTJ	2Y AppJ	1-SI-43-701-A 1-SI-43-902-A 1-SI-43-701-A	
1-FSV-43-310	PAS HOT LEG 3 SAMPLE ISOL	1-47W625-15 / C-2	A	PASS	2	0.375	GL	SO	C	C	C	RPI LTJ	2Y AppJ	1-SI-43-701-A 1-SI-43-902-A 1-SI-43-701-A	
1-FSV-43-318	PAS CONTAINMENT AIR SUPPLY ISOL	1-47W625-15 / B-9	A	PASS	2	0.375	GL	SO	C	C	C	RPI LTJ	2Y AppJ	1-SI-43-701-A 1-SI-43-902-A 1-SI-43-701-A	
1-FSV-43-319	PAS CONTAINMENT AIR SUPPLY ISOL	1-47W625-15 / B-9	A	PASS	2	0.375	GL	SO	C	C	C	RPI LTJ	2Y AppJ	1-SI-43-701-A 1-SI-43-902-A 1-SI-43-701-A	
1-FSV-43-325	PAS CONTAINMENT AIR RETURN ISOL	1-47W625-15 / B-10	A	PASS	2	0.375	GL	SO	C	C	C	RPI LTJ	2Y AppJ	1-SI-43-701-A 1-SI-43-902-A 1-SI-43-701-A	
1-FSV-43-341	PAS WASTE TO CNTMT SUMP ISOL	1-47W625-15 / H-6	A	PASS	2	0.375	GL	SO	C	C	C	RPI LTJ	2Y AppJ	1-SI-43-701-A 1-SI-43-902-A 1-SI-43-701-A	
1-FSV-43-342	PAS WASTE TO CNTMT SUMP ISOL	1-47W625-15 / G-6	A	PASS	2	0.375	GL	SO	C	C	C	RPI LTJ	2Y AppJ	1-SI-43-701-A 1-SI-43-902-A 1-SI-43-701-A	
1-FCV-43-433	LOCA H2 CNTMT MONITOR U/S SAMPLE ISOL	1-47W625-11 / F-4	A	ACT	2	0.375	GL	SO	O/C	C	C	RPI LTJ FSC STC	2Y AppJ Q Q	1-SI-43-902-A 1-SI-43-701-B 1-SI-43-901-A 1-SI-43-902-A 1-SI-43-901-A 1-SI-43-902-A	
1-FCV-43-434	LOCA H2 CNTMT MONITOR D/S SAMPLE ISOL	1-47W625-11 / F-4	A	ACT	2	0.375	GL	SO	O/C	C	C	RPI LTJ FSC STC	2Y AppJ Q Q	1-SI-43-902-A 1-SI-43-701-B 1-SI-43-901-A 1-SI-43-902-A 1-SI-43-901-A 1-SI-43-902-A	

Appendix B - Valve Test Plan

VALVE ID	FUNCTION	DRAWING/COOR	CAT	ACT/ PASS	CLASS	SIZE	TYPE	ACT	POSITION			TEST REQ	FREQ	PROCEDURE	NOTES
									NORM	SAFE	FAIL				
1-FCV-43-435	LOCA H2 CNTMT MONITOR U/S SAMPLE ISOL	1-47W625-11 / D-5	A	ACT	2	0.375	GL	SO	O/C	C	C	RPI LTJ FSC STC	2Y AppJ Q Q	1-SI-43-902-B 1-SI-43-701-B 1-SI-43-901-B 1-SI-43-902-B 1-SI-43-901-B 1-SI-43-902-B	
1-FCV-43-436	LOCA H2 CNTMT MONITOR D/S SAMPLE ISOL	1-47W625-11 / C-5	A	ACT	2	0.375	GL	SO	O/C	C	C	RPI LTJ FSC STC	2Y AppJ Q Q	1-SI-43-902-B 1-SI-43-701-B 1-SI-43-901-B 1-SI-43-902-B 1-SI-43-901-B 1-SI-43-902-B	
1-RTV-43-677	1-FI-43-9 ROOT	1-47W625-1 / G-6	B	PASS	2	1	GL	M	C	C	N/A	NTR	NTR		
1-CKV-43-834	PAS WASTE TO CNTMT SUMP CHECK	1-47W625-15 / H-5	A/C	PASS	2	0.375	CK	SA	C	C	N/A	LTJ	AppJ	1-SI-43-701-A	
1-CKV-43-841	PAS WASTE TO CNTMT SUMP CHECK	1-47W625-15 / G-5	A/C	PASS	2	0.375	CK	SA	C	C	N/A	LTJ	AppJ	1-SI-43-701-A	
1-CKV-43-883	PAS CONTAINMENT AIR RETURN CHECK	1-47W625-15 / A-9	A/C	PASS	2	0.375	CK	SA	C	C	N/A	LTJ	AppJ	1-SI-43-701-A	
1-CKV-43-884	PAS CONTAINMENT AIR RETURN CHECK	1-47W625-15 / A-10	A/C	PASS	2	0.375	CK	SA	C	C	N/A	LTJ	AppJ	1-SI-43-701-A	
1-ISV-43-1631	ZINC INJECTION ISOLATION VALVE	1-47W625-1 / H-6	B	PASS	2	0.5	GL	M	C	C	N/A	NTR	NTR		
1-ISV-52-500	PENETRATION 26B ILRT OUTSIDE	47W331-3 / H-2	A	PASS	2	0.75	GA	M	LC	C	N/A	LTJ	AppJ	1-SI-52-701	
1-ISV-52-501	PENETRATION 26A ILRT OUTSIDE	47W331-3 / H-2	A	PASS	2	0.75	GA	M	LC	C	N/A	LTJ	AppJ	1-SI-52-701	
1-ISV-52-502	PEN 96A INTERGRATED LE AK RATE TEST OUTSIDE	47W331-3 / H-2	A	PASS	2	0.75	GA	M	LC	C	N/A	LTJ	AppJ	1-SI-52-701	
1-ISV-52-503	PEN 96B INTERGRATED LE AK RATE TEST OUTSIDE	47W331-3 / H-2	A	PASS	2	0.75	GA	M	LC	C	N/A	LTJ	AppJ	1-SI-52-701	
1-ISV-52-504	PENETRATION 26B ILRT INSIDE	47W331-3 / H-2	A	PASS	2	0.75	GA	M	LC	C	N/A	LTJ	AppJ	1-SI-52-701	
1-ISV-52-505	PENETRATION 26A ILRT INSIDE	47W331-3 / H-2	A	PASS	2	0.75	GA	M	LC	C	N/A	LTJ	AppJ	1-SI-52-701	

Appendix B - Valve Test Plan

VALVE ID	FUNCTION	DRAWING/COOR	CAT	ACT/ PASS	CLASS	SIZE	TYPE	ACT	POSITION			TEST REQ	FREQ	PROCEDURE	NOTES
									NORM	SAFE	FAIL				
1-ISV-52-506	PEN 96A INTERGRATED LE AK RATE TEST INSIDE	47W331-3 / H-2	A	PASS	2	0.75	GA	M	LC	C	N/A	LTJ	AppJ	1-SI-52-701	
1-ISV-52-507	PEN 96B INTERGRATED LE AK RATE TEST INSIDE	47W331-3 / H-2	A	PASS	2	0.75	GA	M	LC	C	N/A	LTJ	AppJ	1-SI-52-701	
1-ISV-59-522	UNIT 1 RB DI WATER HEADER ISOLATION	0-47W856-1 / F-2	A	PASS	2	2	DIA	M	LC	C	N/A	LTJ	AppJ	1-SI-59-701	
1-ISV-59-698	UNIT 1 RB DI WATER HEADER ISOLATION	0-47W856-1 / F-2	A	PASS	2	2	DIA	M	LC	C	N/A	LTJ	AppJ	1-SI-59-701	
1-FCV-61-96	GLYCOL COOLED FLOOR SUPPLY HEADER ISOL	1-47W814-2 / E-11	A	ACT	2	2	DIA	AO	O	C	C	RPI LTJ FSC STC	2Y AppJ Q Q	1-SI-61-902-A 1-SI-61-701 1-SI-61-901-A 1-SI-61-902-A 1-SI-61-901-A 1-SI-61-902-A	
1-FCV-61-97	GLYCOL COOLED FLOOR SUPPLY HEADER ISOL	1-47W814-2 / E-11	A	ACT	2	2	DIA	AO	O	C	C	RPI LTJ FSC STC	2Y AppJ Q Q	1-SI-61-902-B 1-SI-61-701 1-SI-61-901-B 1-SI-61-902-B 1-SI-61-901-B 1-SI-61-902-B	
1-FCV-61-110	GLYCOL COOLED FLOOR RETURN HEADER ISOL	1-47W814-2 / G-9	A	ACT	2	2	DIA	AO	O	C	C	RPI LTJ FSC STC	2Y AppJ Q Q	1-SI-61-902-A 1-SI-61-701 1-SI-61-901-A 1-SI-61-902-A 1-SI-61-901-A 1-SI-61-902-A	
1-FCV-61-122	GLYCOL COOLED FLOOR RETURN HEADER ISOL	1-47W814-2 / G-9	A	ACT	2	2	DIA	AO	O	C	C	RPI LTJ FSC STC	2Y AppJ Q Q	1-SI-61-902-B 1-SI-61-701 1-SI-61-901-B 1-SI-61-902-B 1-SI-61-901-B 1-SI-61-902-B	

Appendix B - Valve Test Plan

VALVE ID	FUNCTION	DRAWING/COOR	CAT	ACT/ PASS	CLASS	SIZE	TYPE	ACT	POSITION			TEST REQ	FREQ	PROCEDURE	NOTES
									NORM	SAFE	FAIL				
1-FCV-61-191	GLYCOL SUPPLY TO AHUS CONTAINMENT ISOLATION	1-47W814-2 / A-6	A	ACT	2	4	DIA	AO	O	C	C	RPI	2Y	1-SI-61-902-A	
												LTJ	AppJ	1-SI-61-701	
												FSC	Q	1-SI-61-901-A 1-SI-61-902-A	
												STC	Q	1-SI-61-901-A 1-SI-61-902-A	
1-FCV-61-192	GLYCOL SUPPLY TO AHUS CONTAINMENT ISOLATION	1-47W814-2 / A-7	A	ACT	2	4	DIA	AO	O	C	C	RPI	2Y	1-SI-61-902-B	
												LTJ	AppJ	1-SI-61-701	
												FSC	Q	1-SI-61-901-B 1-SI-61-902-B	
												STC	Q	1-SI-61-901-B 1-SI-61-902-B	
1-FCV-61-193	GLYCOL RETURN AUX BLDG ISOLATION	1-47W814-2 / B-6	A	ACT	2	4	DIA	AO	O	C	C	RPI	2Y	1-SI-61-902-A	
												LTJ	AppJ	1-SI-61-701	
												FSC	Q	1-SI-61-901-A 1-SI-61-902-A	
												STC	Q	1-SI-61-901-A 1-SI-61-902-A	
1-FCV-61-194	GLYCOL RETURN CONTAINMENT ISOLATION	1-47W814-2 / B-7	A	ACT	2	4	DIA	AO	O	C	C	RPI	2Y	1-SI-61-902-B	
												LTJ	AppJ	1-SI-61-701	
												FSC	Q	1-SI-61-901-B 1-SI-61-902-B	
												STC	Q	1-SI-61-901-B 1-SI-61-902-B	
1-CKV-61-533	GLYCOL SUPPLY HEADER BYPASS CHECK	1-47W814-2 / B-7	A/C	ACT	2	0.375	CK	SA	C	O/C	N/A	LTJ	AppJ		
												CM	CM	1-SI-61-701 1-SI-61-903	

Appendix B - Valve Test Plan

VALVE ID	FUNCTION	DRAWING/COOR	CAT	ACT/ PASS	CLASS	SIZE	TYPE	ACT	POSITION			TEST REQ	FREQ	PROCEDURE	NOTES
									NORM	SAFE	FAIL				
1-CKV-61-658	ICE CONDENSER FLOOR DRAIN GATE 1	1-47W814-2 / D-12	C	ACT	3	12	CK	SA	C	O	N/A	CVO BDC	RO RO		DTJ-10 : Class C* DTJ-10
1-CKV-61-659	ICE CONDENSER FLOOR DRAIN GATE 2	1-47W814-2 / D-12	C	ACT	3	12	CK	SA	C	O	N/A	CVO BDC	RO RO		DTJ-10 : Class C* DTJ-10
1-CKV-61-660	ICE CONDENSER FLOOR DRAIN GATE 3	1-47W814-2 / D-12	C	ACT	3	12	CK	SA	C	O	N/A	CVO BDC	RO RO		DTJ-10 : Class C* DTJ-10
1-CKV-61-661	ICE CONDENSER FLOOR DRAIN GATE 4	1-47W814-2 / D-12	C	ACT	3	12	CK	SA	C	O	N/A	CVO BDC	RO RO		DTJ-10 : Class C* DTJ-10
1-CKV-61-662	ICE CONDENSER FLOOR DRAIN GATE 5	1-47W814-2 / D-12	C	ACT	3	12	CK	SA	C	O	N/A	CVO BDC	RO RO		DTJ-10 : Class C* DTJ-10
1-CKV-61-663	ICE CONDENSER FLOOR DRAIN GATE 6	1-47W814-2 / D-12	C	ACT	3	12	CK	SA	C	O	N/A	CVO BDC	RO RO		DTJ-10 : Class C* DTJ-10
1-CKV-61-664	ICE CONDENSER FLOOR DRAIN GATE 7	1-47W814-2 / D-12	C	ACT	3	12	CK	SA	C	O	N/A	CVO BDC	RO RO		DTJ-10 : Class C* DTJ-10
1-CKV-61-665	ICE CONDENSER FLOOR DRAIN GATE 8	1-47W814-2 / D-12	C	ACT	3	12	CK	SA	C	O	N/A	CVO BDC	RO RO		DTJ-10 : Class C* DTJ-10
1-CKV-61-666	ICE CONDENSER FLOOR DRAIN GATE 9	1-47W814-2 / D-12	C	ACT	3	12	CK	SA	C	O	N/A	CVO BDC	RO RO		DTJ-10 : Class C* DTJ-10

Appendix B - Valve Test Plan

VALVE ID	FUNCTION	DRAWING/COOR	CAT	ACT/ PASS	CLASS	SIZE	TYPE	ACT	POSITION			TEST REQ	FREQ	PROCEDURE	NOTES
									NORM	SAFE	FAIL				
1-CKV-61-667	ICE CONDENSER FLOOR DRAIN GATE 10	1-47W814-2 / D-12	C	ACT	3	12	CK	SA	C	O	N/A	CVO BDC	RO RO		DTJ-10 : Class C* DTJ-10
1-CKV-61-668	ICE CONDENSER FLOOR DRAIN GATE 11	1-47W814-2 / D-12	C	ACT	3	12	CK	SA	C	O	N/A	CVO BDC	RO RO		DTJ-10 : Class C* DTJ-10
1-CKV-61-669	ICE CONDENSER FLOOR DRAIN GATE 12	1-47W814-2 / D-12	C	ACT	3	12	CK	SA	C	O	N/A	CVO BDC	RO RO		DTJ-10 : Class C* DTJ-10
1-CKV-61-670	ICE CONDENSER FLOOR DRAIN GATE 13	1-47W814-2 / D-12	C	ACT	3	12	CK	SA	C	O	N/A	CVO BDC	RO RO		DTJ-10 : Class C* DTJ-10
1-CKV-61-671	ICE CONDENSER FLOOR DRAIN GATE 14	1-47W814-2 / D-12	C	ACT	3	12	CK	SA	C	O	N/A	CVO BDC	RO RO		DTJ-10 : Class C* DTJ-10
1-CKV-61-672	ICE CONDENSER FLOOR DRAIN GATE 15	1-47W814-2 / D-12	C	ACT	3	12	CK	SA	C	O	N/A	CVO BDC	RO RO		DTJ-10 : Class C* DTJ-10
1-CKV-61-673	ICE CONDENSER FLOOR DRAIN GATE 16	1-47W814-2 / D-12	C	ACT	3	12	CK	SA	C	O	N/A	CVO BDC	RO RO		DTJ-10 : Class C* DTJ-10
1-CKV-61-674	ICE CONDENSER FLOOR DRAIN GATE 17	1-47W814-2 / D-12	C	ACT	3	12	CK	SA	C	O	N/A	CVO BDC	RO RO		DTJ-10 : Class C* DTJ-10
1-CKV-61-675	ICE CONDENSER FLOOR DRAIN GATE 18	1-47W814-2 / D-12	C	ACT	3	12	CK	SA	C	O	N/A	CVO BDC	RO RO		DTJ-10 : Class C* DTJ-10

Appendix B - Valve Test Plan

VALVE ID	FUNCTION	DRAWING/COOR	CAT	ACT/ PASS	CLASS	SIZE	TYPE	ACT	POSITION			TEST REQ	FREQ	PROCEDURE	NOTES
									NORM	SAFE	FAIL				
1-CKV-61-676	ICE CONDENSER FLOOR DRAIN GATE 19	1-47W814-2 / D-12	C	ACT	3	12	CK	SA	C	O	N/A	CVO BDC	RO RO		DTJ-10 : Class C* DTJ-10
1-CKV-61-677	ICE CONDENSER FLOOR DRAIN GATE 20	1-47W814-2 / D-12	C	ACT	3	12	CK	SA	C	O	N/A	CVO BDC	RO RO		DTJ-10 : Class C* DTJ-10
1-CKV-61-680	GLYCOL RETURN HEADER BYPASS CHECK	1-47W814-2 / B-7	A/C	ACT	2	0.375	CK	SA	C	O/C	N/A	LTJ CM	AppJ CM	1-SI-61-701 1-SI-61-701 1-SI-61-903	
1-CKV-61-692	GLYCOL COOLED FLOOR SUPPLY BYPASS CHECK	1-47W814-2 / F-11	A/C	ACT	2	0.375	CK	SA	C	O/C	N/A	LTJ CM	AppJ CM	1-SI-61-701 1-SI-61-701 1-SI-61-904	
1-CKV-61-745	GLYCOL COOLED FLOOR RETURN BYPASS CHECK	1-47W814-2 / G-9	A/C	ACT	2	0.375	CK	SA	C	O/C	N/A	LTJ CM	AppJ CM	1-SI-61-701 1-SI-61-701 1-SI-61-904	
1-FCV-62-61	CVCS SEAL WATER RETURN HEADER ISOL	1-47W809-1 / B-7	A	ACT	2	4	GA	MO	O	C	FAI	RPI LTJ STC	2Y AppJ RO	 1-SI-62-701 1-SI-62-905 1-SI-62-907	 DTJ-14
1-FCV-62-63	CVCS SEAL WATER RETURN HEADER ISOL	1-47W809-1 / B-8	A	ACT	2	4	GA	MO	O	C	FAI	RPI LTJ STC	2Y AppJ RO	 1-SI-62-701 1-SI-62-905 1-SI-62-907	 DTJ-14
1-FCV-62-69	CVCS LETDOWN ISOLATION	1-47W809-1 / A-2	B	ACT	1	3	GL	AO	O/C	C	C	RPI FSC STC	2Y CSD CSD	 1-SI-62-905 1-SI-62-907 1-SI-62-905 1-SI-62-907	 DTJ-15 DTJ-15

Appendix B - Valve Test Plan

VALVE ID	FUNCTION	DRAWING/COOR	CAT	ACT/ PASS	CLASS	SIZE	TYPE	ACT	POSITION			TEST REQ	FREQ	PROCEDURE	NOTES
									NORM	SAFE	FAIL				
1-FCV-62-70	CVCS LETDOWN ISOLATION	1-47W809-1 / A-2	B	ACT	1	3	GL	AO	O/C	C	C	RPI	2Y		
												FSC	CSD	1-SI-62-905 1-SI-62-907	DTJ-15
												STC	CSD	1-SI-62-905 1-SI-62-907	DTJ-15
1-FCV-62-72	CVCS LETDOWN ORIFICE A ISOLATION	1-47W809-1 / A-5	A	ACT	2	2	GL	AO	O	C	C	RPI	2Y		
												LTJ	AppJ	1-SI-62-701	
												FSC	Q	1-SI-62-904 1-SI-62-907	
												STC	Q	1-SI-62-904 1-SI-62-907	
1-FCV-62-73	CVCS LETDOWN ORIFICE B ISOLATION	1-47W809-1 / A-4	A	ACT	2	2	GL	AO	O	C	C	RPI	2Y		
												LTJ	AppJ	1-SI-62-701	
												FSC	Q	1-SI-62-904 1-SI-62-907	
												STC	Q	1-SI-62-904 1-SI-62-907	
1-FCV-62-74	CVCS LETDOWN ORIFICE C ISOLATION	1-47W809-1 / A-4	A	ACT	2	2	GL	AO	O	C	C	RPI	2Y		
												LTJ	AppJ	1-SI-62-701	
												FSC	Q	1-SI-62-904 1-SI-62-907	
												STC	Q	1-SI-62-904 1-SI-62-907	
1-FCV-62-76	CVCS LETDOWN ORIFICE ISOLATION	1-47W809-1 / A-5	A	ACT	2	2	GL	AO	O	C	C	RPI	2Y		
												LTJ	AppJ	1-SI-62-701	
												FSC	Q	1-SI-62-904 1-SI-62-907	
												STC	Q	1-SI-62-904 1-SI-62-907	
1-FCV-62-77	CVCS LP LETDOWN ISOL	1-47W809-1 / A-7	A	ACT	2	2	GL	AO	O	C	C	RPI	2Y		
												LTJ	AppJ	1-SI-62-701	
												FSC	CSD	1-SI-62-905 1-SI-62-907	DTJ-15
												STC	CSD	1-SI-62-905 1-SI-62-907	DTJ-15

Appendix B - Valve Test Plan

VALVE ID	FUNCTION	DRAWING/COOR	CAT	ACT/ PASS	CLASS	SIZE	TYPE	ACT	POSITION			TEST REQ	FREQ	PROCEDURE	NOTES
									NORM	SAFE	FAIL				
1-FCV-62-84	PZR AUXILARY SPRAY LINE ISOLATION	1-47W809-1 / B-2	B	ACT	1	3	GL	AO	C	C	C	RPI	2Y		
												FSC	CSD	1-SI-62-905 1-SI-62-907	DTJ-08
												STC	CSD	1-SI-62-905 1-SI-62-907	DTJ-08
1-FCV-62-90	CVCS CHARGING HEADER ISOLATION	1-47W809-1 / D-8	B	ACT	2	3	GA	MO	O	C	FAI	RPI	2Y		
												STC	CSD	1-SI-62-905 1-SI-62-907	DTJ-15
1-FCV-62-91	CVCS CHARGING HEADER ISOLATION	1-47W809-1 / D-8	B	ACT	2	3	GA	MO	O	C	FAI	RPI	2Y		
												STC	CSD	1-SI-62-905 1-SI-62-907	DTJ-15
1-LCV-62-132	VOLUME CONTROL TANK OUTLET ISOLATION	1-47W809-1 / D-10	B	ACT	2	4	GA	MO	O	C	FAI	RPI	2Y		
												STC	CSD	1-SI-62-905 1-SI-62-907	DTJ-16
1-LCV-62-133	VOLUME CONTROL TANK OUTLET ISOLATION	1-47W809-1 / D-10	B	ACT	2	4	GA	MO	O	C	FAI	RPI	2Y		
												STC	CSD	1-SI-62-905 1-SI-62-907	DTJ-16
1-LCV-62-135	RWST CVCS SUPPLY HDR ISOLATION	1-47W809-1 / H-10	B	ACT	2	8	GA	MO	C	O/C	FAI	RPI	2Y		
												STC	CSD		DTJ-16
												STO	CSD	1-SI-62-905 1-SI-62-907	DTJ-16
1-LCV-62-136	RWST CVCS SUPPLY HDR ISOLATION	1-47W809-1 / H-10	B	ACT	2	8	GA	MO	C	O/C	FAI	RPI	2Y		
												STC	CSD		DTJ-16
												STO	CSD	1-SI-62-905 1-SI-62-907	DTJ-16
1-CKV-62-504	RWST TO CVCS CHG PUMP SUCTION CHECK	1-47W809-1 / H-10	C	ACT	2	8	CK	SA	C	O/C	N/A	NTR	NTR		DTJ-13
												CVC	RO	1-SI-62-906	DTJ-11
												CVO	RO	1-SI-63-905	DTJ-11

Appendix B - Valve Test Plan

VALVE ID	FUNCTION	DRAWING/COOR	CAT	ACT/ PASS	CLASS	SIZE	TYPE	ACT	POSITION			TEST REQ	FREQ	PROCEDURE	NOTES
									NORM	SAFE	FAIL				
1-RFV-62-505	CHARGING PUMP SUCTION HDR RELIEF	1-47W809-1 / F-10	C	ACT	2	0.75	RV	SA	C	O/C	N/A	RV	RV	1-SI-0-902	
1-CKV-62-523	CCP 1A-A MINIFLOW CHECK	1-47W809-1 / G-9	A/C	ACT	2	2	CK	SA	C	O/C	N/A	LTP	2Y		
												CVC	Q		
												CVO	Q	1-SI-63-905	
1-CKV-62-525	CCP 1A-A DISCHARGE CHECK	1-47W809-1 / G-9	A/C	ACT	2	4	CK	SA	O	O/C	N/A	LT	2Y	1-SI-63-905	
												CVC	RO	1-SI-62-901-B	DTJ-11
												CVO	RO	1-SI-63-905	DTJ-11
1-CKV-62-530	CCP 1B-B MINIFLOW CHECK	1-47W809-1 / F-9	A/C	ACT	2	2	CK	SA	C	O/C	N/A	LTP	2Y		
												CVC	Q		
												CVO	Q	1-SI-63-905	
1-CKV-62-532	CCP 1B-B DISCHARGE CHECK	1-47W809-1 / F-9	A/C	ACT	2	4	CK	SA	O	O/C	N/A	LT	2Y	1-SI-63-905	
												CVC	RO	1-SI-62-901-A	DTJ-11
												CVO	RO	1-SI-63-905	DTJ-11
1-CKV-62-543	CVCS CHARGING HEADER CHECK	1-47W809-1 / A-7	C	ACT	2	3	CK	SA	O	C	N/A	CM	CM		
1-CKV-62-560	RCP 1 SEAL WATER INJECTION CHK	1-47W809-1 / F-6	C	ACT	1	2	CK	SA	O	O/C	N/A	CM	CM	1-SI-62-911 1-SI-68-33	
1-CKV-62-561	RCP 2 SEAL WATER INJECTION CHK	1-47W809-1 / F-6	C	ACT	1	2	CK	SA	O	O/C	N/A	CM	CM	1-SI-62-911 1-SI-68-33	
1-CKV-62-562	RCP 3 SEAL WATER INJECTION CHK	1-47W809-1 / H-6	C	ACT	1	2	CK	SA	O	O/C	N/A	CM	CM	1-SI-62-911 1-SI-68-33	
1-CKV-62-563	RCP 4 SEAL WATER INJECTION CHK	1-47W809-1 / H-6	C	ACT	1	2	CK	SA	O	O/C	N/A	CM	CM	1-SI-62-911 1-SI-68-33	
1-CKV-62-576	RCP 1 SEAL WATER INJECTION CHECK	1-47W809-1 / E-4	C	ACT	1	2	CK	SA	O	O/C	N/A	CM	CM	1-SI-62-911 1-SI-68-33	
1-CKV-62-577	RCP 2 SEAL WATER INJECTION CHECK	1-47W809-1 / E-2	C	ACT	1	2	CK	SA	O	O/C	N/A	CM	CM	1-SI-62-911 1-SI-68-33	
1-CKV-62-578	RCP 3 SEAL WATER INJECTION CHECK	1-47W809-1 / G-2	C	ACT	1	2	CK	SA	O	O/C	N/A	CM	CM	1-SI-62-911 1-SI-68-33	

Appendix B - Valve Test Plan

VALVE ID	FUNCTION	DRAWING/COOR	CAT	ACT/ PASS	CLASS	SIZE	TYPE	ACT	POSITION			TEST REQ	FREQ	PROCEDURE	NOTES
									NORM	SAFE	FAIL				
1-CKV-62-579	RCP 4 SEAL WATER INJECTION CHECK	1-47W809-1 / G-4	C	ACT	1	2	CK	SA	O	O/C	N/A	CM	CM	1-SI-62-911 1-SI-68-33	
1-RFV-62-636	CVCS SEAL WTR RETURN HEADER RELIEF	1-47W809-1 / B-6	C	ACT	2	2	RV	SA	C	O/C	N/A	RV	RV	1-SI-0-902	
1-CKV-62-638	CVCS NORM CHARGING CHECK	1-47W809-1 / A-2	C	ACT	1	3	CK	SA	O	C	N/A	CM	CM	1-SI-62-912	
1-CKV-62-639	CVCS SEAL WTR 1-FCV-62-61 EQL CHECK	1-47W809-1 / C-7	A/C	ACT	2	0.75	CK	SA	C	O/C	N/A	LTJ CM	AppJ CM	1-SI-62-701 1-SI-62-701 1-SI-62-913	
1-CKV-62-640	CVCS ALT CHARGING CHECK	1-47W809-1 / A-1	C	ACT	1	3	CK	SA	O	C	N/A	CM	CM	1-SI-62-912	
1-RFV-62-649	CVCS SEAL WATER HX RELIEF	1-47W809-1 / C-9	C	ACT	2	2	RV	SA	C	O/C	N/A	RV	RV	1-SI-0-902	
1-CKV-62-659	CVCS NORM CHARGING CHECK	1-47W809-1 / A-2	C	ACT	1	3	CK	SA	O	C	N/A	CM	CM	1-SI-62-912	
1-CKV-62-660	CVCS ALT CHARGING CHECK	1-47W809-1 / A-1	C	ACT	1	3	CK	SA	O	C	N/A	CM	CM	1-SI-62-912	
1-CKV-62-661	CVCS CHARGING TO RCS SPRAY CHECK	1-47W809-1 / B-2	C	ACT	1	3	CK	SA	O/C	C	N/A	CM	CM	1-SI-62-912	
1-RFV-62-662	CVCS LETDOWN HEADER RELIEF	1-47W809-1 / A-3	A/C	ACT	2	2	RV	SA	C	O/C	N/A	LTJ RV	AppJ RV	1-SI-62-701 1-SI-0-902	
1-RFV-62-675	CVCS LETDOWN RELIEF	1-47W809-1 / B-10	C	ACT	2	2	RV	SA	C	O/C	N/A	RV	RV	1-SI-0-902	
1-ISV-62-1000	BORIC ACID EMERGENCY CONN ISOLATION VALVE	0-47W809-5 / H-8	B	PASS	3	3	BA	M	C	C	N/A	NTR	NTR		
1-CKV-62-1052A	BA XFER PUMP 1A-A DISCH CHECK	0-47W809-5 / F-8	C	ACT	3	2	CK	SA	O/C	O/C	N/A	CVC CVO	Q Q	1-SI-62-902-B 1-SI-62-914-B 1-SI-62-902-A 1-SI-62-902-B 1-SI-62-914-A	
1-CKV-62-1052B	BA XFER PUMP 1B-B DISCH CHECK	0-47W809-5 / F-7	C	ACT	3	2	CK	SA	O/C	O/C	N/A	CVC CVO	Q Q	1-SI-62-902-A 1-SI-62-914-A 1-SI-62-914-B	
1-RFV-62-1221	CCP 1A-A SUCTION RELIEF	1-47W809-1 / G-10	C	ACT	2	0.75	RV	SA	C	O/C	N/A	RV	RV	1-SI-0-902	
1-RFV-62-1222	CCP 1B-B SUCTION RELIEF	1-47W809-1 / E-9	C	ACT	2	0.75	RV	SA	C	O/C	N/A	RV	RV	1-SI-0-902	

Appendix B - Valve Test Plan

VALVE ID	FUNCTION	DRAWING/COOR	CAT	ACT/ PASS	CLASS	SIZE	TYPE	ACT	POSITION			TEST REQ	FREQ	PROCEDURE	NOTES
									NORM	SAFE	FAIL				
1-FCV-62-1228	CCP SUCTION TO VCT VENT HDR ISOL	1-47W809-1 / C-10	B	ACT	2	1	GL	AO	O	C	C	RPI	2Y		
												FSC	CSD	1-SI-62-905 1-SI-62-907	DTJ-16
												STC	CSD	1-SI-62-905 1-SI-62-907	DTJ-16
1-FCV-62-1229	CCP SUCTION TO VCT VENT HDR ISOL	1-47W809-1 / C-10	B	ACT	2	1	GL	AO	O	C	C	RPI	2Y		
												FSC	CSD	1-SI-62-905 1-SI-62-907	DTJ-16
												STC	CSD	1-SI-62-905 1-SI-62-907	DTJ-16
1-FCV-63-1	RWST TO RHR SUCTION	1-47W811-1 / E-10	B	ACT	2	14	GA	MO	O	O/C	FAI	RPI	2Y	1-SI-63-915-A	
												STC	CSD	1-SI-63-911 1-SI-63-915-A	DTJ-19
												STO	CSD		DTJ-19
1-FCV-63-3	SI PUMP MINI FLOW RECIRC HDR TO RWST ISOL	1-47W811-1 / E-8	B	ACT	2	2	GL	MO	O	O/C	FAI	RPI	2Y	1-SI-63-915-A	
												STC	CSD	1-SI-63-903-A 1-SI-63-915-A	DTJ-20
												STO	CSD		DTJ-20
1-FCV-63-4	SI PUMP 1A-A MINI FLOW RECIRC TO RWST ISOL	1-47W811-1 / E-8	B	ACT	2	2	GL	MO	O	O/C	FAI	RPI	2Y	1-SI-63-915-B	
												STC	Q	1-SI-63-902-A 1-SI-63-915-B	
												STO	Q		
1-FCV-63-5	RWST TO SI PUMP SUCTION ISOL	1-47W811-1 / D-10	B	ACT	2	6	GA	MO	O	O/C	FAI	RPI	2Y	1-SI-63-915-B	
												STC	CSD	1-SI-63-903-B 1-SI-63-915-B	DTJ-19
												STO	CSD		DTJ-19

Appendix B - Valve Test Plan

VALVE ID	FUNCTION	DRAWING/COOR	CAT	ACT/ PASS	CLASS	SIZE	TYPE	ACT	POSITION			TEST REQ	FREQ	PROCEDURE	NOTES
									NORM	SAFE	FAIL				
1-FCV-63-6	RHR HX A OUTLET TO SI PUMP SUCTION	1-47W811-1 / F-10	B	ACT	2	4	GA	MO	C	O/C	FAI	RPI	2Y	1-SI-63-915-B	
												STC	Q		
												STO	Q	1-SI-63-902-A 1-SI-63-915-B	
1-FCV-63-7	RHR HX 1A-A OUTLET TO SI PUMP 1A-A SUCT	1-47W811-1 / F-10	B	ACT	2	4	GA	MO	C	O/C	FAI	RPI	2Y	1-SI-63-915-A	
												STC	Q		
												STO	Q	1-SI-63-902-A 1-SI-63-915-A	
1-FCV-63-8	RHR PMP 1A-A TO CHG PMP & SIP 1A-A SUCT ISOL	1-47W811-1 / H-9	B	ACT	2	8	GA	MO	C	O/C	FAI	RPI	2Y	1-SI-63-915-A	
												STC	RO		DTJ-21
												STO	RO	1-SI-63-903-A 1-SI-63-915-A	DTJ-21
1-FCV-63-11	RHR HX 1B-B OUTLET TO SIP 1B-B SUCT ISOL	1-47W811-1 / F-9	B	ACT	2	8	GA	MO	C	O/C	FAI	RPI	2Y	1-SI-63-915-A	
												STC	RO		DTJ-21
												STO	RO	1-SI-63-903-A 1-SI-63-915-A	DTJ-21
1-FCV-63-21	SIP 1A-A HOT LEG 1&3 CHK VLV LEAK TEST ISOL	1-47W811-1 / F-5	B	ACT	2	0.75	GL	AO	C	C	C	RPI	2Y		
												FSC	Q		
												STC	Q		
1-FCV-63-22	SI PUMPS TO COLD LEG INJECTION	1-47W811-1 / E-6	B	ACT	2	4	GA	MO	O	O/C	FAI	RPI	2Y	1-SI-63-915-B	
												STC	CSD	1-SI-63-903-B 1-SI-63-915-B	DTJ-22
												STO	CSD		DTJ-22

Appendix B - Valve Test Plan

VALVE ID	FUNCTION	DRAWING/COOR	CAT	ACT/ PASS	CLASS	SIZE	TYPE	ACT	POSITION			TEST REQ	FREQ	PROCEDURE	NOTES
									NORM	SAFE	FAIL				
1-FCV-63-23	COLD LEG ACCUMULATOR FILL FROM SIP 1A-A ISV	1-47W811-1 / E-7	A	ACT	2	1	GL	AO	O	C	C	RPI	2Y	1-SI-63-915-B	
												LTJ	AppJ	1-SI-63-701	
												FSC	Q	1-SI-63-902-B 1-SI-63-915-B	
												STC	Q	1-SI-63-902-B 1-SI-63-915-B	
1-FCV-63-24	BORON INJ CL CKV LEAK TEST/ACCUM MAKEUP ISOL	1-47W811-1 / C-6	B	ACT	2	1	GL	AO	C	C	C	RPI	2Y		
												FSC	Q		
												STC	Q		
1-FCV-63-25	SIS BORON INJ TANK OUTLET ISOLATION	1-47W811-1 / B-7	B	ACT	2	4	GA	MO	C	O/C	FAI	RPI	2Y	1-SI-63-915-B	
												STC	CSD		DTJ-23
												STO	CSD	1-SI-63-903-A 1-SI-63-915-B	DTJ-23
1-FCV-63-26	SIS BORON INJ TANK OUTLET ISOLATION	1-47W811-1 / B-7	B	ACT	2	4	GA	MO	C	O/C	FAI	RPI	2Y	1-SI-63-915-A	
												STC	CSD		DTJ-23
												STO	CSD	1-SI-63-903-A 1-SI-63-915-A	DTJ-23
1-RFV-63-28	PENET X-30 PRESSURE RELIEF	1-47W811-1 / D-6	A/C	ACT	2	0.75	RV	SA	C	O/C	N/A	LTJ	AppJ	1-SI-63-701	
												RV	RV	1-SI-0-902	
1-FCV-63-47	SAFETY INJ PUMP 1A-A SUCTION ISOLATION	1-47W811-1 / E-10	B	ACT	2	6	GA	MO	O	O/C	FAI	RPI	2Y	1-SI-63-915-A	
												STC	Q	1-SI-63-902-A 1-SI-63-915-A	
												STO	Q		

Appendix B - Valve Test Plan

VALVE ID	FUNCTION	DRAWING/COOR	CAT	ACT/ PASS	CLASS	SIZE	TYPE	ACT	POSITION			TEST REQ	FREQ	PROCEDURE	NOTES
									NORM	SAFE	FAIL				
1-FCV-63-48	SAFETY INJ PUMP 1B-B SUCTION ISOLATION	1-47W811-1 / E-10	B	ACT	2	6	GA	MO	O	O/C	FAI	RPI STC STO	2Y Q Q	1-SI-63-915-B 1-SI-63-902-B 1-SI-63-915-B	
1-FCV-63-63	SIS COLD LEG ACCUM 4 N2 MAKEUP	1-47W811-1 / A-5	B	PASS	2	1	GL	AO	C	C	C	RPI	2Y	1-SI-63-915-B	
1-FCV-63-64	SIS ACCUM N2 HDR INLET VLV	0-47W830-6 / B-6	A	ACT	2	1	GL	AO	O/C	C	C	RPI LTJ FSC STC	2Y AppJ Q Q	1-SI-63-915-A 1-SI-63-701 1-SI-63-902-A 1-SI-63-915-A 1-SI-63-902-A 1-SI-63-915-A	
1-FCV-63-67	SIS COLD LEG ACCUM 4 OUTLET ISOLATION	1-47W811-1 / B-5	B	PASS	1	10	GA	MO	O	O	FAI	RPI	2Y	1-SI-63-913	
1-FCV-63-68	SIS COLD LEG ACCUM 4 CKV LEAK TEST ISOL	1-47W811-1 / C-5	B	ACT	2	0.75	GL	AO	C	C	C	RPI FSC STC	2Y Q Q		
1-FCV-63-69	SI PUMP TO COLD LEG 4 CHK VLV LEAK TEST ISOL	1-47W811-1 / H-2	B	ACT	2	0.75	GL	AO	C	C	C	RPI FSC STC	2Y Q Q		
1-FCV-63-70	SIS COLD LEG ACCUM 4 MAKEUP	1-47W811-1 / B-6	B	ACT	2	1	GL	AO	C	C	C	RPI FSC STC	2Y Q Q		

Appendix B - Valve Test Plan

VALVE ID	FUNCTION	DRAWING/COOR	CAT	ACT/ PASS	CLASS	SIZE	TYPE	ACT	POSITION			TEST REQ	FREQ	PROCEDURE	NOTES
									NORM	SAFE	FAIL				
1-FCV-63-71	SIS CHECK VLV TEST LINE HOLDUP TANK ISOL	1-47W811-1 / D-6	A	ACT	2	0.75	GL	AO	O/C	C	C	RPI	2Y	1-SI-63-915-A	
												LTJ	AppJ	1-SI-63-701	
												FSC	Q	1-SI-63-902-A 1-SI-63-915-A	
												STC	Q	1-SI-63-902-A 1-SI-63-915-A	
1-FCV-63-72	CONTAINMENT SUMP TO RHR PUMP 1A-A ISOL	1-47W811-1 / H-7	B	ACT	2	18	GA	MO	C	O/C	FAI	RPI	2Y	1-SI-63-915-A	
												STC	RO		DTJ-24
												STO	RO	1-SI-63-903-A 1-SI-63-915-A	DTJ-24
1-FCV-63-73	CONTAINMENT SUMP TO RHR PUMP 1B-B ISOL	1-47W811-1 / H-7	B	ACT	2	18	GA	MO	C	O/C	FAI	RPI	2Y	1-SI-63-915-A	
												STC	RO		DTJ-24
												STO	RO	1-SI-63-903-A 1-SI-63-915-A	DTJ-24
1-FCV-63-77	SIS COLD LEG ACCUM 3 MAKEUP	1-47W811-1 / B-4	B	ACT	2	1	GL	AO	C	C	C	RPI	2Y		
												FSC	Q		
												STC	Q		
1-FCV-63-78	SIS COLD LEG ACCUM 3 CKV LEAK TEST ISOL	1-47W811-1 / C-4	B	ACT	2	0.75	GL	AO	C	C	C	RPI	2Y		
												FSC	Q		
												STC	Q		

Appendix B - Valve Test Plan

VALVE ID	FUNCTION	DRAWING/COOR	CAT	ACT/ PASS	CLASS	SIZE	TYPE	ACT	POSITION			TEST REQ	FREQ	PROCEDURE	NOTES
									NORM	SAFE	FAIL				
1-FCV-63-79	SI PUMP TO COLD LEG 3 CHK VLV LEAK TEST ISOL	1-47W811-1 / G-5	B	ACT	2	0.75	GL	AO	C	C	C	RPI	2Y		
												FSC	Q		
												STC	Q		
1-FCV-63-80	SIS COLD LEG ACCUM 3 OUTLET ISOLATION	1-47W811-1 / B-4	B	PASS	1	10	GA	MO	O	O	FAI	RPI	2Y	1-SI-63-913	
1-FCV-63-84	SIS CHECK VLV LEAK TEST HOLDUP TANK ISOL	1-47W811-1 / C-6	A	ACT	2	0.75	GL	AO	C	C	C	RPI	2Y	1-SI-63-915-B	
												LTJ	AppJ	1-SI-63-701	
												FSC	Q	1-SI-63-902-B 1-SI-63-915-B	
												STC	Q	1-SI-63-902-B 1-SI-63-915-B	
1-FCV-63-87	SIS COLD LEG ACCUM 3 N2 MAKEUP	1-47W811-1 / A-4	B	PASS	2	1	GL	AO	C	C	C	RPI	2Y	1-SI-63-915-A	
1-FCV-63-93	RHR TO COLD LEG 2 & 3 INJECTION ISOLATION	1-47W811-1 / G-7	B	ACT	2	8	GA	MO	O	O/C	FAI	RPI	2Y	1-SI-63-915-A	
												STC	CSD	1-SI-63-903-A 1-SI-63-915-A	DTJ-25
												STO	CSD		DTJ-25
1-FCV-63-94	RHR TO COLD LEG 1 & 4 INJECTION ISOLATION	1-47W811-1 / G-7	B	ACT	2	8	GA	MO	O	O/C	FAI	RPI	2Y	1-SI-63-915-B	
												STC	CSD	1-SI-63-903-B 1-SI-63-915-B	DTJ-25
												STO	CSD		DTJ-25

Appendix B - Valve Test Plan

VALVE ID	FUNCTION	DRAWING/COOR	CAT	ACT/ PASS	CLASS	SIZE	TYPE	ACT	POSITION			TEST REQ	FREQ	PROCEDURE	NOTES
									NORM	SAFE	FAIL				
1-FCV-63-95	SIS COLD LEG ACCUM 2 MAKEUP	1-47W811-1 / B-3	B	ACT	2	1	GL	AO	C	C	C	RPI FSC STC	2Y Q Q		
1-FCV-63-96	SIS ACCUM TK 2 CHECK VLV LEAK TEST	1-47W811-1 / C-2	B	ACT	2	0.75	GL	AO	C	C	C	RPI FSC STC	2Y Q Q		
1-FCV-63-97	SI PUMP TO COLD LEG 2 CHK VLV LEAK TEST ISOL	1-47W811-1 / H-4	B	ACT	2	0.75	GL	AO	C	C	C	RPI FSC STC	2Y Q Q		
1-FCV-63-98	SIS COLD LEG ACCUM 2 OUTLET ISOLATION	1-47W811-1 / B-3	B	PASS	1	10	GA	MO	O	O	FAI	RPI	2Y	1-SI-63-913	
1-FCV-63-107	SIS COLD LEG ACCUM 2 N2 MAKEUP	1-47W811-1 / A-2	B	PASS	2	1	GL	AO	C	C	C	RPI	2Y	1-SI-63-915-B	
1-FCV-63-111	COLD LEG 2 & 3 RHR CHK VLV LEAK TEST ISOL	1-47W811-1 / H-6	B	ACT	2	0.75	GL	AO	C	C	C	RPI FSC STC	2Y Q Q		
1-FCV-63-112	COLD LEG 1 & 4 RHR CHK VLV LEAK TEST ISOL	1-47W811-1 / H-6	B	ACT	2	0.75	GL	AO	C	C	C	RPI FSC STC	2Y Q Q		

Appendix B - Valve Test Plan

VALVE ID	FUNCTION	DRAWING/COOR	CAT	ACT/ PASS	CLASS	SIZE	TYPE	ACT	POSITION			TEST REQ	FREQ	PROCEDURE	NOTES
									NORM	SAFE	FAIL				
1-FCV-63-115	SIS COLD LEG ACCUM 1 MAKEUP	1-47W811-1 / B-2	B	ACT	2	1	GL	AO	C	C	C	RPI FSC STC	2Y Q Q		
1-FCV-63-116	SIS COLD LEG ACCUM 1 CKV LEAK TEST ISOL	1-47W811-1 / C-1	B	ACT	2	0.75	GL	AO	C	C	C	RPI FSC STC	2Y Q Q		
1-FCV-63-117	SI PMP TO COLD LEG 1 CKV VLV LEAK TEST ISOL	1-47W811-1 / H-1	B	ACT	2	0.75	GL	AO	C	C	C	RPI FSC STC	2Y Q Q		
1-FCV-63-118	SIS COLD LEG ACCUM 1 OUTLET ISOLATION	1-47W811-1 / B-1	B	PASS	1	10	GA	MO	O	O	FAI	RPI	2Y	1-SI-63-913	
1-FCV-63-121	SI PMP TO COLD LEG CHK VLV LEAK TEST ISOL	1-47W811-1 / F-5	B	ACT	2	0.75	GL	AO	C	C	C	RPI FSC STC	2Y Q Q		
1-FCV-63-127	SIS COLD LEG ACCUM 1 N2 MAKEUP	1-47W811-1 / A-1	B	PASS	2	1	GL	AO	C	C	C	RPI	2Y		
1-FCV-63-152	SIP 1A-A COLD LEG INJ FLOW CNTL	1-47W811-1 / F-7	B	ACT	2	4	GA	MO	O	O/C	FAI	RPI STC STO	2Y Q Q	1-SI-63-915-A 1-SI-63-902-A 1-SI-63-915-A	
1-FCV-63-153	SIP 1B-B COLD LEG INJ FLOW CNTL	1-47W811-1 / E-7	B	ACT	2	4	GA	MO	O	O/C	FAI	RPI STC STO	2Y Q Q	1-SI-63-915-B 1-SI-63-902-B 1-SI-63-915-B	

Appendix B - Valve Test Plan

VALVE ID	FUNCTION	DRAWING/COOR	CAT	ACT/ PASS	CLASS	SIZE	TYPE	ACT	POSITION			TEST REQ	FREQ	PROCEDURE	NOTES
									NORM	SAFE	FAIL				
1-FCV-63-156	SI PUMP 1A-A HOT LEG 1 & 3 INJECTION	1-47W811-1 / F-6	B	ACT	2	4	GA	MO	C	O/C	FAI	RPI STC STO	2Y Q Q	1-SI-63-915-A 1-SI-63-902-A 1-SI-63-915-A	
1-FCV-63-157	SI PUMP 1B-B HOT LEG 2 & 4 INJECTION	1-47W811-1 / D-6	B	ACT	2	4	GA	MO	C	O/C	FAI	RPI STC STO	2Y Q Q	1-SI-63-915-B 1-SI-63-902-B 1-SI-63-915-B	
1-FCV-63-158	RHR HOT LEG 1 & 3 CKV LEAK TEST ISOL	1-47W811-1 / G-5	B	ACT	2	0.75	GL	AO	C	C	C	RPI FSC STC	2Y Q Q		
1-FCV-63-163	HOT LEG 1 SIS CHECK VLV LEAK TEST ISOLATION	1-47W811-1 / G-5	B	ACT	2	0.75	GL	AO	C	C	C	RPI FSC STC	2Y Q Q		
1-FCV-63-164	HOT LEG 3 SIS CHECK VLV LEAK TEST ISOLATION	1-47W811-1 / F-4	B	ACT	2	0.75	GL	AO	C	C	C	RPI FSC STC	2Y Q Q		
1-FCV-63-165	HOT LEG 2 SIS CHECK VLV LEAK TEST ISOLATION	1-47W811-1 / C-3	B	ACT	2	0.75	GL	AO	C	C	C	RPI FSC STC	2Y Q Q		

Appendix B - Valve Test Plan

VALVE ID	FUNCTION	DRAWING/COOR	CAT	ACT/ PASS	CLASS	SIZE	TYPE	ACT	POSITION			TEST REQ	FREQ	PROCEDURE	NOTES
									NORM	SAFE	FAIL				
1-FCV-63-166	HOT LEG 4 SIS CHECK VLV LEAK TEST ISOLATION	1-47W811-1 / E-5	B	ACT	2	0.75	GL	AO	C	C	C	RPI FSC STC	2Y Q Q		
1-FCV-63-167	HOT LEG 2 & 4 SIS CHK VLV LEAK TEST ISOL	1-47W811-1 / C-6	B	ACT	2	0.75	GL	AO	C	C	C	RPI FSC STC	2Y Q Q		
1-FCV-63-172	RHR TO HOT LEG 1 & 3 INJECTION ISOLATION	1-47W811-1 / F-6	B	ACT	2	12	GA	MO	C	O/C	FAI	RPI STC STO	2Y CSD CSD	1-SI-63-915-B 1-SI-63-903-B 1-SI-63-915-B	 DTJ-25 DTJ-25
1-FCV-63-174	BORON INJ TO COLD LEGS CHK VLV LEAK TEST ISOL	1-47W811-1 / C-6	B	ACT	2	0.75	GL	AO	C	C	C	RPI FSC STC	2Y Q Q		
1-FCV-63-175	SI PUMP 1B-B MINI FLOW RECIRC TO RWST	1-47W811-1 / E-8	B	ACT	2	2	GL	MO	O	O/C	FAI	RPI STC STO	2Y Q Q	1-SI-63-915-B 1-SI-63-902-B 1-SI-63-915-B	
1-FCV-63-177	RHR HX 1A-A OUTLET TO SIP 1A-A SUCT ISOL	1-47W811-1 / F-10	B	PASS	2	4	GA	MO	O	O	FAI	RPI	2Y	1-SI-63-915-A	

Appendix B - Valve Test Plan

VALVE ID	FUNCTION	DRAWING/COOR	CAT	ACT/ PASS	CLASS	SIZE	TYPE	ACT	POSITION			TEST REQ	FREQ	PROCEDURE	NOTES
									NORM	SAFE	FAIL				
1-FCV-63-185	RHR SUPPLY 1-FCV-74-2 LEAK TEST LINE ISOL	1-47W811-1 / E-6	B	ACT	2	0.75	GL	AO	C	C	C	RPI	2Y	1-SI-63-915-A	
												FSC	Q	1-SI-63-902-A 1-SI-63-915-A	
												STC	Q	1-SI-63-902-A 1-SI-63-915-A	
1-FCV-63-186	RHR SUPPLY 1-FCV-74-1 LEAK TEST LINE ISOL	1-47W811-1 / C-6	B	ACT	2	0.75	GL	AO	C	C	C	RPI	2Y		
												FSC	Q		
												STC	Q		
1-CKV-63-502	RWST TO RHR SUCTION CHECK	1-47W811-1 / F-10	C	ACT	2	12	CK	SA	C	O/C	N/A	CVC	RO		DTJ-18
												CVO	RO	1-SI-63-907	DTJ-18
1-CKV-63-510	RWST TO SAFETY INJ PUMP SUCTION CHECK	1-47W811-1 / D-10	C	ACT	2	8	CK	SA	C	O/C	N/A	CVC	RO	1-SI-63-912	DTJ-11
												CVO	RO	1-SI-63-906	DTJ-11
1-RFV-63-511	SAFETY INJECTION PUMP 1A-A RELIEF	1-47W811-1 / E-10	C	ACT	2	0.75	RV	SA	C	O/C	N/A	RV	RV	1-SI-0-902	
1-CKV-63-524	SAFETY INJ PUMP 1A-A DISCHARGE CHECK	1-47W811-1 / F-8	A/C	ACT	2	4	CK	SA	C	O/C	N/A	LT	2Y	1-SI-63-906	
												CVC	RO	1-SI-63-901-B	DTJ-11
												CVO	RO	1-SI-63-906	DTJ-11
1-CKV-63-526	SAFETY INJ PUMP 1B-B DISCHARGE CHECK	1-47W811-1 / D-8	A/C	ACT	2	4	CK	SA	C	O/C	N/A	LT	2Y	1-SI-63-906	
												CVC	RO	1-SI-63-901-A	DTJ-11
												CVO	RO	1-SI-63-906	DTJ-11

Appendix B - Valve Test Plan

VALVE ID	FUNCTION	DRAWING/COOR	CAT	ACT/ PASS	CLASS	SIZE	TYPE	ACT	POSITION			TEST REQ	FREQ	PROCEDURE	NOTES
									NORM	SAFE	FAIL				
1-CKV-63-528	SI PUMP 1A-A MINI FLOW RECIRC CHECK	1-47W811-1 / F-8	A/C	ACT	2	0.75	CK	SA	C	O/C	N/A	LT CVC CVO	2Y Q Q	1-SI-63-906 1-SI-63-901-B 1-SI-63-901-A 1-SI-63-906	
1-CKV-63-530	SI PUMP 1B-B MINI FLOW RECIRC CHECK	1-47W811-1 / D-8	A/C	ACT	2	0.75	CK	SA	C	O/C	N/A	LT CVC CVO	2Y Q Q	1-SI-63-906 1-SI-63-901-A 1-SI-63-901-B 1-SI-63-906	
1-RFV-63-534	SI PUMP 1A-A HOT LEG INJ LINE DISCH RELIEF	1-47W811-1 / E-7	C	ACT	2	0.75	RV	SA	C	O/C	N/A	RV	RV	1-SI-0-902	
1-RFV-63-535	SI PUMP COLD LEG INJ LINE DISCH RELIEF	1-47W811-1 / E-7	C	ACT	2	0.75	RV	SA	C	O/C	N/A	RV	RV	1-SI-0-902	
1-RFV-63-536	SI PUMP 1B-B HOT LEG INJ LINE DISCH RELIEF	1-47W811-1 / D-7	C	ACT	2	0.75	RV	SA	C	O/C	N/A	RV	RV	1-SI-0-902	
1-CKV-63-543	HOT LEG 1 SAFETY INJ CHECK	1-47W811-1 / F-3	A/C	ACT	1	2	CK	SA	C	O/C	N/A	LTP CVC CVO	2Y RO RO	1-SI-0-903 1-SI-63-906 1-SI-63-906	PIV DTJ-11 DTJ-11
1-CKV-63-545	HOT LEG 3 SAFETY INJ CHECK	1-47W811-1 / F-3	A/C	ACT	1	2	CK	SA	C	O/C	N/A	LTP CVC CVO	2Y RO RO	1-SI-0-903 1-SI-63-906 1-SI-63-906	PIV DTJ-11 DTJ-11
1-CKV-63-547	HOT LEG 2 SAFETY INJ CHECK	1-47W811-1 / E-3	A/C	ACT	1	2	CK	SA	C	O/C	N/A	LTP CVC CVO	2Y RO RO	1-SI-0-903 1-SI-63-906 1-SI-63-906	PIV DTJ-11 DTJ-11
1-CKV-63-549	HOT LEG 4 SAFETY INJ CHECK	1-47W811-1 / E-3	A/C	ACT	1	2	CK	SA	C	O/C	N/A	LTP CVC CVO	2Y RO RO	1-SI-0-903 1-SI-63-906 1-SI-63-906	PIV DTJ-11 DTJ-11

Appendix B - Valve Test Plan

VALVE ID	FUNCTION	DRAWING/COOR	CAT	ACT/ PASS	CLASS	SIZE	TYPE	ACT	POSITION			TEST REQ	FREQ	PROCEDURE	NOTES
									NORM	SAFE	FAIL				
1-CKV-63-551	COLD LEG 1 SAFETY INJ CHECK	1-47W811-1 / H-1	A/C	ACT	1	2	CK	SA	C	O/C	N/A	LTP	2Y	1-SI-0-906 1-SI-63-906	PIV
												CVC	RO		DTJ-11
												CVO	RO	1-SI-63-906	DTJ-11
1-CKV-63-553	COLD LEG 2 SAFETY INJ CHECK	1-47W811-1 / H-3	A/C	ACT	1	2	CK	SA	C	O/C	N/A	LTP	2Y	1-SI-0-906 1-SI-63-906	PIV
												CVC	RO		DTJ-11
												CVO	RO	1-SI-63-906	DTJ-11
1-CKV-63-555	COLD LEG 3 SAFETY INJ CHECK	1-47W811-1 / G-3	A/C	ACT	1	2	CK	SA	C	O/C	N/A	LTP	2Y	1-SI-0-906 1-SI-63-906	PIV
												CVC	RO		DTJ-11
												CVO	RO	1-SI-63-906	DTJ-11
1-CKV-63-557	COLD LEG 4 SAFETY INJ CHECK	1-47W811-1 / G-2	A/C	ACT	1	2	CK	SA	C	O/C	N/A	LTP	2Y	1-SI-0-906 1-SI-63-906	PIV
												CVC	RO		DTJ-11
												CVO	RO	1-SI-63-906	DTJ-11
1-CKV-63-558	HOT LEG 4 SAFETY INJ CHECK	1-47W811-1 / E-2	A/C	ACT	1	6	CK	SA	C	O/C	N/A	LTP	2Y	1-SI-0-903 1-SI-63-906	PIV
												CVC	RO		DTJ-11
												CVO	RO	1-SI-63-906	DTJ-11
1-CKV-63-559	HOT LEG 2 SAFETY INJ CHECK	1-47W811-1 / E-1	A/C	ACT	1	6	CK	SA	C	O/C	N/A	LTP	2Y	1-SI-0-903 1-SI-63-906	PIV
												CVC	RO		DTJ-11
												CVO	RO	1-SI-63-906	DTJ-11
1-CKV-63-560	COLD LEG 1 INJ HEADER CHECK	1-47W811-1 / F-1	A/C	ACT	1	10	CK	SA	C	O/C	N/A	LTP	2Y	1-SI-0-904	PIV
												CM	CM	1-SI-63-917	
1-CKV-63-561	COLD LEG 2 INJ HEADER CHECK	1-47W811-1 / D-1	A/C	ACT	1	10	CK	SA	C	O/C	N/A	LTP	2Y	1-SI-0-904	PIV
												CM	CM	1-SI-63-917	

Appendix B - Valve Test Plan

VALVE ID	FUNCTION	DRAWING/COOR	CAT	ACT/ PASS	CLASS	SIZE	TYPE	ACT	POSITION			TEST REQ	FREQ	PROCEDURE	NOTES
									NORM	SAFE	FAIL				
1-CKV-63-562	COLD LEG 3 INJ HEADER CHECK	1-47W811-1 / E-2	A/C	ACT	1	10	CK	SA	C	O/C	N/A	LTP CM	2Y CM	1-SI-0-904 1-SI-63-917	PIV
1-CKV-63-563	COLD LEG 4 INJ HEADER CHECK	1-47W811-1 / F-2	A/C	ACT	1	10	CK	SA	C	O/C	N/A	LTP CM	2Y CM	1-SI-0-904 1-SI-63-917	PIV
1-RFV-63-577	SIS BORON INJECTION TNK OUTLET RELIEF	1-47W811-1 / A-7	C	ACT	2	0.75	RV	SA	C	O/C	N/A	RV	RV	1-SI-0-902	
1-CKV-63-581	BORON INJ LINE CHECK	1-47W811-1 / C-6	A/C	ACT	1	3	CK	SA	C	O/C	N/A	LTP CVC CVO	2Y RO RO	1-SI-0-907 1-SI-63-905 1-SI-63-905	PIV DTJ-11 DTJ-11
1-CKV-63-586	COLD LEG 1 BORON INJ CHECK	1-47W811-1 / E-1	A/C	ACT	1	1.5	CK	SA	C	O/C	N/A	LTP CVC CVO	2Y RO RO	1-SI-0-903 1-SI-63-905 1-SI-63-905	PIV DTJ-11 DTJ-11
1-CKV-63-587	COLD LEG 2 BORON INJ CHECK	1-47W811-1 / D-2	A/C	ACT	1	1.5	CK	SA	C	O/C	N/A	LTP CVC CVO	2Y RO RO	1-SI-0-903 1-SI-63-905 1-SI-63-905	PIV DTJ-11 DTJ-11
1-CKV-63-588	COLD LEG 3 BORON INJ CHECK	1-47W811-1 / E-2	A/C	ACT	1	1.5	CK	SA	C	O/C	N/A	LTP CVC CVO	2Y RO RO	1-SI-0-903 1-SI-63-905 1-SI-63-905	PIV DTJ-11 DTJ-11
1-CKV-63-589	COLD LEG 4 BORON INJ CHECK	1-47W811-1 / F-2	A/C	ACT	1	1.5	CK	SA	C	O/C	N/A	LTP CVC CVO	2Y RO RO	1-SI-0-903 1-SI-63-905 1-SI-63-905	PIV DTJ-11 DTJ-11
1-RFV-63-602	SIS COLD LEG ACCUM 1 RELIEF	1-47W811-1 / A-2	C	ACT	2	0.75	RV	SA	C	O/C	N/A	RV	RV	1-SI-0-902	
1-RFV-63-603	SIS COLD LEG ACCUM 2 RELIEF	1-47W811-1 / A-3	C	ACT	2	0.75	RV	SA	C	O/C	N/A	RV	RV	1-SI-0-902	

Appendix B - Valve Test Plan

VALVE ID	FUNCTION	DRAWING/COOR	CAT	ACT/ PASS	CLASS	SIZE	TYPE	ACT	POSITION			TEST REQ	FREQ	PROCEDURE	NOTES
									NORM	SAFE	FAIL				
1-RFV-63-604	SIS COLD LEG ACCUM 3 RELIEF	1-47W811-1 / A-4	C	ACT	2	0.75	RV	SA	C	O/C	N/A	RV	RV	1-SI-0-902	
1-RFV-63-605	SIS COLD LEG ACCUM 4 RELIEF	1-47W811-1 / A-6	C	ACT	2	0.75	RV	SA	C	O/C	N/A	RV	RV	1-SI-0-902	
1-CKV-63-622	SIS COLD LEG ACCUM 1 OUTLET CHECK	1-47W811-1 / D-1	A/C	ACT	1	10	CK	SA	C	O/C	N/A	LTP CM	2Y CM	1-SI-0-901 1-SI-63-917	PIV
1-CKV-63-623	SIS COLD LEG ACCUM 2 OUTLET CHECK	1-47W811-1 / D-1	A/C	ACT	1	10	CK	SA	C	O/C	N/A	LTP CM	2Y CM	1-SI-0-901 1-SI-63-917	PIV
1-CKV-63-624	SIS COLD LEG ACCUM 3 OUTLET CHECK	1-47W811-1 / D-3	A/C	ACT	1	10	CK	SA	C	O/C	N/A	LTP CM	2Y CM	1-SI-0-901 1-SI-63-917	PIV
1-CKV-63-625	SIS COLD LEG ACCUM 4 OUTLET CHECK	1-47W811-1 / D-3	A/C	ACT	1	10	CK	SA	C	O/C	N/A	LTP CM	2Y CM	1-SI-0-901 1-SI-63-917	PIV
1-RFV-63-626	RHR TO COLD LEG 2 & 3 INJ LINE RELIEF	1-47W811-1 / G-7	C	ACT	2	2	RV	SA	C	O/C	N/A	RV	RV	1-SI-0-902	
1-RFV-63-627	RHR TO COLD LEG 1 & 4 INJ LINE RELIEF	1-47W811-1 / F-7	C	ACT	2	2	RV	SA	C	O/C	N/A	RV	RV	1-SI-0-902	
1-CKV-63-632	COLD LEG 2 RHR INJ LINE CHECK	1-47W811-1 / H-2	A/C	ACT	1	6	CK	SA	C	O/C	N/A	LTP CVC CVO	2Y RO RO	1-SI-0-904 1-SI-63-907	PIV DTJ-18 DTJ-18
1-CKV-63-633	COLD LEG 1 RHR INJ LINE CHECK	1-47W811-1 / G-1	A/C	ACT	1	6	CK	SA	C	O/C	N/A	LTP CVC CVO	2Y RO RO	1-SI-0-904 1-SI-63-907	PIV DTJ-18 DTJ-18
1-CKV-63-634	COLD LEG 3 RHR INJ LINE CHECK	1-47W811-1 / G-3	A/C	ACT	1	6	CK	SA	C	O/C	N/A	LTP CVC CVO	2Y RO RO	1-SI-0-904 1-SI-63-907	PIV DTJ-18 DTJ-18

Appendix B - Valve Test Plan

VALVE ID	FUNCTION	DRAWING/COOR	CAT	ACT/ PASS	CLASS	SIZE	TYPE	ACT	POSITION			TEST REQ	FREQ	PROCEDURE	NOTES
									NORM	SAFE	FAIL				
1-CKV-63-635	COLD LEG 4 RHR INJ LINE CHECK	1-47W811-1 / G-1	A/C	ACT	1	6	CK	SA	C	O/C	N/A	LTP	2Y	1-SI-0-904	PIV
												CVC	RO		DTJ-18
												CVO	RO	1-SI-63-907	DTJ-18
1-RFV-63-637	RHR TO HOT LEG 1 & 3 INJ LINE RELIEF	1-47W811-1 / F-7	C	ACT	2	0.75	RV	SA	C	O/C	N/A	RV	RV	1-SI-0-902	
1-CKV-63-640	HOT LEG 1 RHR INJ LINE CHECK	1-47W811-1 / G-3	A/C	ACT	1	8	CK	SA	C	O/C	N/A	LTP	2Y	1-SI-0-903	PIV
												CVC	RO		DTJ-18
												CVO	RO	1-SI-63-907	DTJ-18
1-CKV-63-641	1-CKV-63-641 HOT LEG 1 INJ HEADER CHECK	1-47W811-1 / F-1	A/C	ACT	1	6	CK	SA	C	O/C	N/A	LTP	2Y	1-SI-0-903	PIV
												CVC	RO		DTJ-18
												CVO	RO	1-SI-63-907	DTJ-18
1-CKV-63-643	HOT LEG 3 RHR INJ LINE CHECK	1-47W811-1 / F-3	A/C	ACT	1	8	CK	SA	C	O/C	N/A	LTP	2Y	1-SI-0-903	PIV
												CVC	RO		DTJ-18
												CVO	RO	1-SI-63-907	DTJ-18
1-CKV-63-644	HOT LEG 3 INJ HEADER CHECK	1-47W811-1 / D-2	A/C	ACT	1	6	CK	SA	C	O/C	N/A	LTP	2Y	1-SI-0-903	PIV
												CVC	RO		DTJ-18
												CVO	RO	1-SI-63-907	DTJ-18
1-CKV-63-725	SIS RELIEF VALVE DISCHARGE HEADER CHECK	1-47W811-1 / E-8	C	ACT	2	2	CK	SA	C	O/C	N/A	CM	CM	1-SI-63-914	
1-RFV-63-835	RHR HX 1B-B OUTLET TO SI PUMP SUCTION RELIEF	1-47W811-1 / E-10	C	ACT	2	0.75	RV	SA	C	O/C	N/A	RV	RV	1-SI-0-902	

Appendix B - Valve Test Plan

VALVE ID	FUNCTION	DRAWING/COOR	CAT	ACT/ PASS	CLASS	SIZE	TYPE	ACT	POSITION			TEST REQ	FREQ	PROCEDURE	NOTES
									NORM	SAFE	FAIL				
1-CKV-63-868	1-CKV-63-868 CONTAINMENT N2 HEADER CHECK	0-47W830-6 / B-7	A/C	ACT	2	1	CK	SA	O	C	N/A	LTJ BDO CVC	AppJ CSD CSD	1-SI-63-701 1-SI-77-902 1-SI-63-701 1-SI-77-902	 DTJ-28 DTJ-28
1-ISV-63-1000A	SAFETY INJECTION HOSE ISOLATION VALVE	1-47W811-1 / F-8	B	PASS	2	2	GL	M	C	C	N/A	NTR	NTR		
1-ISV-63-1001A	SAFETY INJECTION HOSE ISOLATION VALVE	1-47W811-1 / F-8	B	PASS	2	2	GL	M	C	C	N/A	NTR	NTR		
1-ISV-63-1010B	SAFETY INJECTION HOSE ISOLATION VALVE	1-47W811-1 / D-8	B	PASS	2	2	GL	M	C	C	N/A	NTR	NTR		
1-ISV-63-1011B	SAFETY INJECTION HOSE ISOLATION VALVE	1-47W811-1 / D-8	B	PASS	2	2	GL	M	C	C	N/A	NTR	NTR		
1-FCV-67-9A	ERCW STRAINER 1A-A BACKWASH	0-47W845-1 / G-9	B	ACT	3	4	BA	MO	C	O	FAI	STO	Q	0-SI-67-907-A	
1-FCV-67-9B	ERCW STRAINER 1A-A FLUSH CONTROL	0-47W845-1 / H-9	B	ACT	3	4	BA	MO	C	O	FAI	STO	Q	0-SI-67-907-A	
1-FCV-67-10A	ERCW STRAINER 1B-B BACKWASH	0-47W845-1 / F-3	B	ACT	3	4	BA	MO	C	O	FAI	STO	Q	0-SI-67-907-B	
1-FCV-67-10B	ERCW STRAINER 1B-B FLUSH CONTROL	0-47W845-1 / F-3	B	ACT	3	4	BA	MO	C	O	FAI	STO	Q	0-SI-67-907-B	
1-FCV-67-65	DG HX 1B1/1B2 ERCW SUP HDR 2A ISOL	0-47W845-1 / C-5	B	PASS	3	8	BF	MO	C	C	FAI	RPI	2Y		
1-FCV-67-66	DG HX 1A1/1A2 ERCW SUP HDR 1A ISOL	0-47W845-1 / C-10	B	ACT	3	8	BF	MO	C	O	FAI	RPI STO	2Y Q	0-SI-67-914-A 0-SI-67-907-A	
1-FCV-67-67	DG HX 1B1/1B2 ERCW SUP HDR 1B ISOL	0-47W845-1 / C-6	B	ACT	3	8	BF	MO	C	O	FAI	RPI STO	2Y Q	0-SI-67-914-B 0-SI-67-907-B	
1-FCV-67-68	DG HX 1A1/1A2 ERCW SUP HDR 2B ISOL	0-47W845-1 / C-10	B	PASS	3	8	BF	MO	C	C	FAI	RPI	2Y		

Appendix B - Valve Test Plan

VALVE ID	FUNCTION	DRAWING/COOR	CAT	ACT/ PASS	CLASS	SIZE	TYPE	ACT	POSITION			TEST REQ	FREQ	PROCEDURE	NOTES
									NORM	SAFE	FAIL				
1-FCV-67-83	LOWER CNTMT CLR HDR A ERCW SUP ISOL	1-47W845-3 / H-8	A	ACT	2	6	BF	MO	O	C	FAI	RPI	2Y	0-SI-67-908-A	
												LTJ	AppJ	1-SI-67-701-C	
												STC	CSD	0-SI-67-908-A	DTJ-27
1-FCV-67-87	LOWER CNTMT CLR HDR A ERCW RET ISOL	1-47W845-3 / H-7	A	ACT	2	6	BF	MO	O	C	FAI	RPI	2Y	0-SI-67-908-A	
												LTJ	AppJ	1-SI-67-701-C	
												STC	CSD	0-SI-67-908-A	DTJ-27
1-FCV-67-88	LOWER CNTMT CLR HDR A ERCW RET ISOL	1-47W845-3 / H-8	A	ACT	2	6	BF	MO	O	C	FAI	RPI	2Y	0-SI-67-908-A	
												LTJ	AppJ	1-SI-67-701-C	
												STC	CSD	0-SI-67-908-A	DTJ-27
1-FCV-67-89	LOWER CNTMT CLR HDR A ERCW SUP ISOL	1-47W845-3 / H-7	A	ACT	2	6	BF	MO	O	C	FAI	RPI	2Y	0-SI-67-908-A	
												LTJ	AppJ	1-SI-67-701-C	
												STC	CSD	0-SI-67-908-A	DTJ-27
1-FCV-67-91	LOWER CNTMT CLR HDR C ERCW SUP ISOL	1-47W845-3 / G-8	A	ACT	2	6	BF	MO	O	C	FAI	RPI	2Y	0-SI-67-908-A	
												LTJ	AppJ	1-SI-67-701-C	
												STC	CSD	0-SI-67-908-A	DTJ-27
1-FCV-67-95	LOWER CNTMT CLR HDR C ERCW RET ISOL	1-47W845-3 / F-7	A	ACT	2	6	BF	MO	O	C	FAI	RPI	2Y	0-SI-67-908-A	
												LTJ	AppJ	1-SI-67-701-C	
												STC	CSD	0-SI-67-908-A	DTJ-27

Appendix B - Valve Test Plan

VALVE ID	FUNCTION	DRAWING/COOR	CAT	ACT/ PASS	CLASS	SIZE	TYPE	ACT	POSITION			TEST REQ	FREQ	PROCEDURE	NOTES
									NORM	SAFE	FAIL				
1-FCV-67-96	LOWER CNTMT CLR HDR C ERCW RET ISOL	1-47W845-3 / F-8	A	ACT	2	6	BF	MO	O	C	FAI	RPI	2Y	0-SI-67-908-A	
												LTJ	AppJ	1-SI-67-701-C	
												STC	CSD	0-SI-67-908-A	DTJ-27
1-FCV-67-97	LOWER CNTMT CLR HDR C ERCW SUP ISOL	1-47W845-3 / G-7	A	ACT	2	6	BF	MO	O	C	FAI	RPI	2Y	0-SI-67-908-A	
												LTJ	AppJ	1-SI-67-701-C	
												STC	CSD	0-SI-67-908-A	DTJ-27
1-FCV-67-99	LOWER CNTMT CLR HDR B ERCW SUP ISOL	1-47W845-3 / F-8	A	ACT	2	6	BF	MO	O	C	FAI	RPI	2Y	0-SI-67-908-B	
												LTJ	AppJ	1-SI-67-701-C	
												STC	CSD	0-SI-67-908-B	DTJ-27
1-FCV-67-103	LOWER CNTMT CLR HDR B ERCW RET ISOL	1-47W845-3 / E-7	A	ACT	2	6	BF	MO	O	C	FAI	RPI	2Y	0-SI-67-908-B	
												LTJ	AppJ	1-SI-67-701-C	
												STC	CSD	0-SI-67-908-B	DTJ-27
1-FCV-67-104	LOWER CNTMT CLR HDR B ERCW RET ISOL	1-47W845-3 / E-8	A	ACT	2	6	BF	MO	O	C	FAI	RPI	2Y	0-SI-67-908-B	
												LTJ	AppJ	1-SI-67-701-C	
												STC	CSD	0-SI-67-908-B	DTJ-27
1-FCV-67-105	LOWER CNTMT CLR HDR B ERCW SUP ISOL	1-47W845-3 / F-7	A	ACT	2	6	BF	MO	O	C	FAI	RPI	2Y	0-SI-67-908-B	
												LTJ	AppJ	1-SI-67-701-C	
												STC	CSD	0-SI-67-908-B	DTJ-27

Appendix B - Valve Test Plan

VALVE ID	FUNCTION	DRAWING/COOR	CAT	ACT/ PASS	CLASS	SIZE	TYPE	ACT	POSITION			TEST REQ	FREQ	PROCEDURE	NOTES
									NORM	SAFE	FAIL				
1-FCV-67-107	LOWER CNTMT CLR HDR D ERCW SUP ISOL	1-47W845-3 / E-8	A	ACT	2	6	BF	MO	O	C	FAI	RPI	2Y	0-SI-67-908-B	
												LTJ	AppJ	1-SI-67-701-C	
												STC	CSD	0-SI-67-908-B	DTJ-27
1-FCV-67-111	LOWER CNTMT CLR HDR D ERCW RET ISOL	1-47W845-3 / D-7	A	ACT	2	6	BF	MO	O	C	FAI	RPI	2Y	0-SI-67-908-B	
												LTJ	AppJ	1-SI-67-701-C	
												STC	CSD	0-SI-67-908-B	DTJ-27
1-FCV-67-112	LOWER CNTMT CLR HDR D ERCW RET ISOL	1-47W845-3 / D-8	A	ACT	2	6	BF	MO	O	C	FAI	RPI	2Y	0-SI-67-908-B	
												LTJ	AppJ	1-SI-67-701-C	
												STC	CSD	0-SI-67-908-B	DTJ-27
1-FCV-67-113	LOWER CNTMT CLR HDR D ERCW SUP ISOL	1-47W845-3 / E-7	A	ACT	2	6	BF	MO	O	C	FAI	RPI	2Y	0-SI-67-908-B	
												LTJ	AppJ	1-SI-67-701-C	
												STC	CSD	0-SI-67-908-B	DTJ-27
1-FCV-67-123	CNTMT SPRAY HX 1B-B ERCW SUPPLY	0-47W845-2 / D-9	B	ACT	3	18	BF	MO	C	O/C	FAI	RPI	2Y	0-SI-67-908-B	
												STC	CSD	0-SI-67-908-B	DTJ-12
												STO	CSD		DTJ-12
1-FCV-67-124	CNTMT SPRAY HX 1B-B ERCW RETURN	0-47W845-2 / E-8	B	ACT	3	18	BF	MO	C	O/C	FAI	RPI	2Y	0-SI-67-908-B	
												STC	CSD	0-SI-67-908-B	DTJ-12
												STO	CSD		DTJ-12
1-FCV-67-125	CNTMT SPRAY HX 1A-A ERCW SUPPLY	0-47W845-2 / C-9	B	ACT	3	18	BF	MO	C	O/C	FAI	RPI	2Y	0-SI-67-908-A	
												STC	CSD	0-SI-67-908-A	DTJ-12
												STO	CSD		DTJ-12

Appendix B - Valve Test Plan

VALVE ID	FUNCTION	DRAWING/COOR	CAT	ACT/ PASS	CLASS	SIZE	TYPE	ACT	POSITION			TEST REQ	FREQ	PROCEDURE	NOTES
									NORM	SAFE	FAIL				
1-FCV-67-126	CNTMT SPRAY HX 1A-A ERCW RETURN	0-47W845-2 / D-7	B	ACT	3	18	BF	MO	C	O/C	FAI	RPI	2Y	0-SI-67-908-A	
												STC	CSD	0-SI-67-908-A	DTJ-12
												STO	CSD		DTJ-12
1-FCV-67-130	UPPER CNTMT VENT CLR 1A ERCW SUP HDR ISOL	1-47W845-3 / C-8	A	ACT	2	2	PLG	MO	O	C	FAI	RPI	2Y	0-SI-67-914-A	
												LTJ	AppJ	1-SI-67-701-A	
												STC	Q	0-SI-67-907-A	
1-FCV-67-131	UPPER CNTMT VENT CLR 1A ERCW RET HDR ISOL	1-47W845-3 / C-8	A	ACT	2	2	PLG	MO	O	C	FAI	RPI	2Y	0-SI-67-914-A	
												LTJ	AppJ	1-SI-67-701-A	
												STC	Q	0-SI-67-907-A	
1-FCV-67-133	UPPER CNTMT VENT CLR 1C ERCW SUP HDR ISOL	1-47W845-3 / B-8	A	ACT	2	2	PLG	MO	O	C	FAI	RPI	2Y	0-SI-67-914-A	
												LTJ	AppJ	1-SI-67-701-A	
												STC	Q	0-SI-67-907-A	
1-FCV-67-134	UPPER CNTMT VENT CLR 1C ERCW RET HDR ISOL	1-47W845-3 / C-8	A	ACT	2	2	PLG	MO	O	C	FAI	RPI	2Y	0-SI-67-914-A	
												LTJ	AppJ	1-SI-67-701-A	
												STC	Q	0-SI-67-907-A	

Appendix B - Valve Test Plan

VALVE ID	FUNCTION	DRAWING/COOR	CAT	ACT/ PASS	CLASS	SIZE	TYPE	ACT	POSITION			TEST REQ	FREQ	PROCEDURE	NOTES
									NORM	SAFE	FAIL				
1-FCV-67-138	UPPER CNTMT VENT CLR 1B ERCW SUP HDR ISOL	1-47W845-3 / B-8	A	ACT	2	2	PLG	MO	O	C	FAI	RPI	2Y	0-SI-67-914-B	
												LTJ	AppJ	1-SI-67-701-B	
												STC	Q	0-SI-67-907-B	
1-FCV-67-139	UPPER CNTMT VENT CLR 1B ERCW RET HDR ISOL	1-47W845-3 / B-8	A	ACT	2	2	PLG	MO	O	C	FAI	RPI	2Y	0-SI-67-914-B	
												LTJ	AppJ	1-SI-67-701-B	
												STC	Q	0-SI-67-907-B	
1-FCV-67-141	UPPER CNTMT VENT CLR 1D ERCW SUP HDR ISOL	1-47W845-3 / A-8	A	ACT	2	2	PLG	MO	O	C	FAI	RPI	2Y	0-SI-67-914-B	
												LTJ	AppJ	1-SI-67-701-B	
												STC	Q	0-SI-67-907-B	
1-FCV-67-142	UPPER CNTMT VENT CLR 1D ERCW RET HDR ISOL	1-47W845-3 / A-8	A	ACT	2	2	PLG	MO	O	C	FAI	RPI	2Y	0-SI-67-914-B	
												LTJ	AppJ	1-SI-67-701-B	
												STC	Q	0-SI-67-907-B	
1-FCV-67-143	CCS HX A OUTLET ERCW FLOW CNTL BYP	0-47W845-2 / C-8	B	ACT	3	12	GL	MO	O/C	O/C	FAI	RPI	2Y	0-SI-67-914-A	
												STC	Q	0-SI-67-907-A	
												STO	Q	0-SI-67-907-A	

Appendix B - Valve Test Plan

VALVE ID	FUNCTION	DRAWING/COOR	CAT	ACT/ PASS	CLASS	SIZE	TYPE	ACT	POSITION			TEST REQ	FREQ	PROCEDURE	NOTES
									NORM	SAFE	FAIL				
1-FCV-67-146	CCS HX A OUTLET ERCW FLOW CNTL	0-47W845-2 / C-7	B	ACT	3	24	BF	MO	O/C	O/C	FAI	RPI	2Y	0-SI-67-914-A	
												STC	Q	0-SI-67-907-A	
												STO	Q	0-SI-67-907-A	
1-FCV-67-162	CCS/AFW PMP SPACE CLR 1A-A ERCW SUP FLOW CNTL	1-47W845-4 / B-4	B	ACT	3	2	GL	AO	C	O	O	RPI	2Y	0-SI-67-914-A	
												FSO	Q	0-SI-67-907-A	
												STO	Q	0-SI-67-907-A	
1-FCV-67-164	CCS/AFW PMP SPACE CLR 1B-B ERCW SUP FLOW CNTL	1-47W845-4 / B-6	B	ACT	3	2	GL	AO	C	O	O	RPI	2Y	0-SI-67-914-B	
												FSO	Q	0-SI-67-907-B	
												STO	Q	0-SI-67-907-B	
1-FCV-67-176	SIP ROOM COOLER 1A-A ERCW SUP FLOW CNTL	1-47W845-4 / D-4	B	ACT	3	1.5	GL	AO	C	O	O	RPI	2Y	0-SI-67-914-A	
												FSO	Q	0-SI-67-907-A	
												STO	Q	0-SI-67-907-A	
1-FCV-67-182	SIP ROOM COOLER 1B-B ERCW SUP FLOW CNTL	1-47W845-4 / D-6	B	ACT	3	1.5	GL	AO	C	O	O	RPI	2Y	0-SI-67-914-B	
												FSO	Q	0-SI-67-907-B	
												STO	Q	0-SI-67-907-B	
1-FCV-67-184	CSP ROOM COOLER 1A-A ERCW SUP FLOW CNTL	1-47W845-4 / D-4	B	ACT	3	1.5	GL	AO	C	O	O	RPI	2Y	0-SI-67-914-A	
												FSO	Q	0-SI-67-907-A	
												STO	Q	0-SI-67-907-A	

Appendix B - Valve Test Plan

VALVE ID	FUNCTION	DRAWING/COOR	CAT	ACT/ PASS	CLASS	SIZE	TYPE	ACT	POSITION			TEST REQ	FREQ	PROCEDURE	NOTES
									NORM	SAFE	FAIL				
1-FCV-67-186	CSP ROOM COOLER 1B-B ERCW SUP FLOW CNTL	1-47W845-4 / D-6	B	ACT	3	1.5	GL	AO	C	O	O	RPI	2Y	0-SI-67-914-B	
												FSO	Q	0-SI-67-907-B	
												STO	Q	0-SI-67-907-B	
1-FCV-67-213	SFP/TBBP SPACE CLR 1A-A ERCW SUP FLOW CNTL	1-47W845-4 / A-4	B	ACT	3	1.5	GL	AO	O/C	O	O	RPI	2Y	0-SI-67-914-A	
												FSO	Q	0-SI-67-907-A	
												STO	Q	0-SI-67-907-A	
1-FCV-67-215	SFP/TBBP SPACE CLR 1B-B ERCW SUP FLOW CNTL	1-47W845-4 / B-6	B	ACT	3	1.5	GL	AO	O/C	O	O	RPI	2Y	0-SI-67-914-B	
												FSO	Q	0-SI-67-907-B	
												STO	Q	0-SI-67-907-B	
1-FCV-67-295	UPPER CNTMT VENT CLR 1A ERCW RET ISOL	1-47W845-3 / C-7	A	ACT	2	2	PLG	MO	O	C	FAI	RPI	2Y	0-SI-67-914-A	
												LTJ	AppJ	1-SI-67-701-A	
												STC	Q	0-SI-67-907-A	
1-FCV-67-296	UPPER CNTMT VENT CLR 1C ERCW RET ISOL	1-47W845-3 / C-7	A	ACT	2	2	PLG	MO	O	C	FAI	RPI	2Y	0-SI-67-914-A	
												LTJ	AppJ	1-SI-67-701-A	
												STC	Q	0-SI-67-907-A	
1-FCV-67-297	UPPER CNTMT VENT CLR 1B ERCW RET ISOL	1-47W845-3 / B-7	A	ACT	2	2	PLG	MO	O	C	FAI	RPI	2Y	0-SI-67-914-B	
												LTJ	AppJ	1-SI-67-701-B	
												STC	Q	0-SI-67-907-B	

Appendix B - Valve Test Plan

VALVE ID	FUNCTION	DRAWING/COOR	CAT	ACT/ PASS	CLASS	SIZE	TYPE	ACT	POSITION			TEST REQ	FREQ	PROCEDURE	NOTES
									NORM	SAFE	FAIL				
1-FCV-67-298	UPPER CNTMT VENT CLR 1D ERCW RET ISOL	1-47W845-3 / A-7	A	ACT	2	2	PLG	MO	O	C	FAI	RPI	2Y	0-SI-67-914-B	
												LTJ	AppJ	1-SI-67-701-B	
												STC	Q	0-SI-67-907-B	
1-FCV-67-342	PIPE CHASE COOLER 1A-A ERCW SUP FLOW CNTL	1-47W845-4 / G-4	B	ACT	3	2	GL	AO	O/C	O	O	RPI	2Y	0-SI-67-914-A	
												FSO	Q	0-SI-67-907-A	
												STO	Q	0-SI-67-907-A	
1-FCV-67-344	PIPE CHASE COOLER 1B-B ERCW SUP FLOW CNTL	1-47W845-4 / G-6	B	ACT	3	2	GL	AO	O/C	O	O	RPI	2Y	0-SI-67-914-B	
												FSO	Q	0-SI-67-907-B	
												STO	Q	0-SI-67-907-B	
1-FCV-67-346	PENT ROOM COOLER 1A-A ERCW SUP FLOW CNTL	1-47W845-4 / F-4	B	ACT	3	1.5	GL	AO	O/C	O	O	RPI	2Y	0-SI-67-914-A	
												FSO	Q	0-SI-67-907-A	
												STO	Q	0-SI-67-907-A	
1-FCV-67-348	PENT ROOM COOLER 1B-B ERCW SUP FLOW CNTL	1-47W845-4 / F-6	B	ACT	3	1.5	GL	AO	O/C	O	O	RPI	2Y	0-SI-67-914-B	
												FSO	Q	0-SI-67-907-B	
												STO	Q	0-SI-67-907-B	

Appendix B - Valve Test Plan

VALVE ID	FUNCTION	DRAWING/COOR	CAT	ACT/ PASS	CLASS	SIZE	TYPE	ACT	POSITION			TEST REQ	FREQ	PROCEDURE	NOTES
									NORM	SAFE	FAIL				
1-FCV-67-350	PENT ROOM COOLER 1A-A ERCW SUP FLOW CNTL	1-47W845-4 / F-4	B	ACT	3	1.5	GL	AO	O/C	O	O	RPI	2Y	0-SI-67-914-A	
												FSO	Q	0-SI-67-907-A	
												STO	Q	0-SI-67-907-A	
1-FCV-67-352	PENT ROOM COOLER 1B-B ERCW SUP FLOW CNTL	1-47W845-4 / F-6	B	ACT	3	1.5	GL	AO	O/C	O	O	RPI	2Y	0-SI-67-914-B	
												FSO	Q	0-SI-67-907-B	
												STO	Q	0-SI-67-907-B	
1-FCV-67-354	PENT ROOM COOLER 1A-A ERCW SUP FLOW CNTL	1-47W845-4 / G-4	B	ACT	3	1.5	GL	AO	O/C	O	O	RPI	2Y	0-SI-67-914-A	
												FSO	Q	0-SI-67-907-A	
												STO	Q	0-SI-67-907-A	
1-FCV-67-356	PENT ROOM COOLER 1B-B ERCW SUP FLOW CNTL	1-47W845-4 / G-6	B	ACT	3	1.5	GL	AO	O/C	O	O	RPI	2Y	0-SI-67-914-B	
												FSO	Q	0-SI-67-907-B	
												STO	Q	0-SI-67-907-B	
1-CKV-67-508A	DG HX 1A1/1A2 ERCW SUP HDR 1A CHECK	0-47W845-1 / C-10	C	ACT	3	8	CK	SA	C	O/C	N/A	CM	CM	0-SI-67-907-A 0-SI-67-911	
1-CKV-67-508B	DG HX 1B1/1B2 ERCW SUP HDR 1B CHECK	0-47W845-1 / C-5	C	ACT	3	8	CK	SA	C	O/C	N/A	CM	CM	0-SI-67-907-B 0-SI-67-911	
1-RFV-67-509A	DG HX 1A2 ERCW RELIEF	0-47W845-1 / B-4	C	ACT	3	0.75	TRV	SA	C	O/C	N/A	RV	RV		
1-RFV-67-509B	DG HX 1B2 ERCW RELIEF	0-47W845-1 / B-4	C	ACT	3	0.75	TRV	SA	C	O/C	N/A	RV	RV	1-SI-0-911	

Appendix B - Valve Test Plan

VALVE ID	FUNCTION	DRAWING/COOR	CAT	ACT/ PASS	CLASS	SIZE	TYPE	ACT	POSITION			TEST REQ	FREQ	PROCEDURE	NOTES
									NORM	SAFE	FAIL				
1-CKV-67-513A	DG HX 1A1/1A2 ERCW SUP HDR 2B CHECK	0-47W845-1 / C-10	C	PASS	3	8	CK	SA	C	C	N/A	NTR	NTR		
1-CKV-67-513B	DG HX 1B1/1B2 ERCW SUP HDR 2A CHECK	0-47W845-1 / C-5	C	PASS	3	8	CK	SA	C	C	N/A	NTR	NTR		
1-RFV-67-514A	DG HX 1A1 ERCW RELIEF	0-47W845-1 / B-4	C	ACT	3	0.75	TRV	SA	C	O/C	N/A	RV	RV	1-SI-0-911	
1-RFV-67-514B	DG HX 1B1 ERCW RELIEF	0-47W845-1 / B-4	C	ACT	3	0.75	TRV	SA	C	O/C	N/A	RV	RV	1-SI-0-911	
1-RFV-67-539A	CS HX 1A ERCW RET HDR RELIEF	0-47W845-2 / D-8	C	ACT	3	2	RV	SA	C	O/C	N/A	RV	RV	1-SI-0-902	
1-RFV-67-539B	CS HX 1B ERCW RET HDR RELIEF	0-47W845-2 / D-8	C	ACT	3	2	RV	SA	C	O/C	N/A	RV	RV	1-SI-0-902	
1-ISV-67-543A	CCS SURGE TNK A ERCW SUP HDR ISOL	0-47W845-2 / D-10	B	ACT	3	3	GA	M	LC	O	N/A	MS	2Y		
1-ISV-67-543B	CCS SURGE TNK A ERCW SUP HDR ISOL	0-47W845-2 / C-10	B	ACT	3	3	GA	M	LC	O	N/A	MS	2Y		
1-ISV-67-544	CCS SURGE TNK A ERCW SUP HDR ISOL	0-47W845-2 / C-10	B	ACT	3	3	GA	M	LC	O/C	N/A	MS	2Y		
1-RFV-67-550	CCS HX A ERCW OUT RELIEF	0-47W845-2 / C-7	C	ACT	3	0.75	TRV	SA	C	O/C	N/A	RV	RV	1-SI-0-911	
1-RFV-67-566A	RCP/CRD VENT CLR A ERCW SUP HDR RELIEF	1-47W845-3 / H-5	C	ACT	3	0.75	TRV	SA	C	O/C	N/A	RV	RV	1-SI-0-911	
1-RFV-67-566B	RCP/CRD VENT CLR B ERCW SUP HDR RELIEF	1-47W845-3 / F-5	C	ACT	3	0.75	TRV	SA	C	O/C	N/A	RV	RV	1-SI-0-911	
1-RFV-67-566C	RCP/CRD VENT CLR C ERCW SUP HDR RELIEF	1-47W845-3 / G-5	C	ACT	3	0.75	TRV	SA	C	O/C	N/A	RV	RV	1-SI-0-911	
1-RFV-67-566D	RCP/CRD VENT CLR D ERCW SUP HDR RELIEF	1-47W845-3 / E-5	C	ACT	3	0.75	TRV	SA	C	O/C	N/A	RV	RV	1-SI-0-911	
1-RFV-67-573A	LOWER CNTMT CLR HDR A ERCW RET RELIEF	1-47W845-3 / G-6	C	ACT	3	0.75	TRV	SA	C	O/C	N/A	RV	RV	1-SI-0-911	
1-RFV-67-573B	LOWER CNTMT CLR HDR B ERCW RET RELIEF	1-47W845-3 / E-6	C	ACT	3	0.75	TRV	SA	C	O/C	N/A	RV	RV	1-SI-0-911	
1-RFV-67-573C	LOWER CNTMT CLR HDR C ERCW RET RELIEF	1-47W845-3 / F-6	C	ACT	3	0.75	TRV	SA	C	O/C	N/A	RV	RV	1-SI-0-911	
1-RFV-67-573D	LOWER CNTMT CLR HDR D ERCW RET RELIEF	1-47W845-3 / D-6	C	ACT	3	0.75	TRV	SA	C	O/C	N/A	RV	RV	1-SI-0-911	
1-CKV-67-575A	1-FCV-67-87 BYPASS CHECK	1-47W845-3 / H-7	A/C	ACT	2	0.5	CK	SA	C	O/C	N/A	LTJ CM	AppJ CM	1-SI-67-701-C 1-SI-67-701-C 1-SI-67-914	

Appendix B - Valve Test Plan

VALVE ID	FUNCTION	DRAWING/COOR	CAT	ACT/ PASS	CLASS	SIZE	TYPE	ACT	POSITION			TEST REQ	FREQ	PROCEDURE	NOTES
									NORM	SAFE	FAIL				
1-CKV-67-575B	1-FCV-67-103 BYPASS CHECK	1-47W845-3 / E-7	A/C	ACT	2	0.5	CK	SA	C	O/C	N/A	LTJ CM	AppJ CM	1-SI-67-701-C 1-SI-67-701-C 1-SI-67-914	
1-CKV-67-575C	1-FCV-67-95 BYPASS CHECK	1-47W845-3 / G-7	A/C	ACT	2	0.5	CK	SA	C	O/C	N/A	LTJ CM	AppJ CM	1-SI-67-701-C 1-SI-67-701-C 1-SI-67-914	
1-CKV-67-575D	1-FCV-67-111 BYPASS CHECK	1-47W845-3 / D-7	A/C	ACT	2	0.5	CK	SA	C	O/C	N/A	LTJ CM	AppJ CM	1-SI-67-701-C 1-SI-67-701-C 1-SI-67-914	
1-CKV-67-580A	UPPER CNTMT VENT CLR 1A ERCW SUP HDR CHECK	1-47W845-3 / C-7	A/C	ACT	2	2	CK	SA	O	C	N/A	LTJ BDO CVC	AppJ Q Q	1-SI-67-701-A 1-SI-67-913-A 1-SI-67-701-A 1-SI-67-913-A	
1-CKV-67-580B	UPPER CNTMT VENT CLR 1B ERCW SUP HDR CHECK	1-47W845-3 / B-7	A/C	ACT	2	2	CK	SA	O	C	N/A	LTJ BDO CVC	AppJ Q Q	1-SI-67-701-B 1-SI-67-913-B 1-SI-67-701-B 1-SI-67-913-B	
1-CKV-67-580C	UPPER CNTMT VENT CLR 1C ERCW SUP HDR CHECK	1-47W845-3 / B-7	A/C	ACT	2	2	CK	SA	O	C	N/A	LTJ BDO CVC	AppJ Q Q	1-SI-67-701-A 1-SI-67-913-A 1-SI-67-701-A 1-SI-67-913-A	

Appendix B - Valve Test Plan

VALVE ID	FUNCTION	DRAWING/COOR	CAT	ACT/ PASS	CLASS	SIZE	TYPE	ACT	POSITION			TEST REQ	FREQ	PROCEDURE	NOTES
									NORM	SAFE	FAIL				
1-CKV-67-580D	UPPER CNTMT VENT CLR 1D ERCW SUP HDR CHECK	1-47W845-3 / A-7	A/C	ACT	2	2	CK	SA	O	C	N/A	LTJ BDO CVC	AppJ Q Q	1-SI-67-701-B 1-SI-67-913-B 1-SI-67-701-B 1-SI-67-913-B	
1-RFV-67-582A	UPPER CNTMT VENT CLR 1A ERCW SUP HDR RELIEF	1-47W845-3 / C-3	C	ACT	3	0.75	TRV	SA	C	O/C	N/A	RV	RV	1-SI-0-911	
1-RFV-67-582B	UPPER CNTMT VENT CLR 1B ERCW SUP HDR RELIEF	1-47W845-3 / B-3	C	ACT	3	0.75	TRV	SA	C	O/C	N/A	RV	RV	1-SI-0-911	
1-RFV-67-582C	UPPER CNTMT VENT CLR 1C ERCW SUP HDR RELIEF	1-47W845-3 / B-3	C	ACT	3	0.75	TRV	SA	C	O/C	N/A	RV	RV	1-SI-0-911	
1-RFV-67-582D	UPPER CNTMT VENT CLR 1D ERCW SUP HDR RELIEF	1-47W845-3 / A-3	C	ACT	3	0.75	TRV	SA	C	O/C	N/A	RV	RV	1-SI-0-911	
1-CKV-67-585A	1-FCV-67-295 BYPASS CHECK	1-47W845-3 / D-7	A/C	ACT	2	0.5	CK	SA	C	O/C	N/A	LTJ CM	AppJ CM	1-SI-67-701-A 1-SI-67-701-A 1-SI-67-915	
1-CKV-67-585B	1-FCV-67-297 BYPASS CHECK	1-47W845-3 / B-7	A/C	ACT	2	0.5	CK	SA	C	O/C	N/A	LTJ CM	AppJ CM	1-SI-67-701-B 1-SI-67-701-B 1-SI-67-915	
1-CKV-67-585C	1-FCV-67-296 BYPASS CHECK	1-47W845-3 / C-7	A/C	ACT	2	0.5	CK	SA	C	O/C	N/A	LTJ CM	AppJ CM	1-SI-67-701-A 1-SI-67-701-A 1-SI-67-915	
1-CKV-67-585D	1-FCV-67-298 BYPASS CHECK	1-47W845-3 / A-7	A/C	ACT	2	0.5	CK	SA	C	O/C	N/A	LTJ CM	AppJ CM	1-SI-67-701-B 1-SI-67-701-B 1-SI-67-915	
1-CKV-67-940A	ERCW SCRN WASH PMP 1A-A DISCH CHECK	0-47W845-1 / H-6	C	ACT	3	3	CK	SA	C	O/C	N/A	CM	CM	0-SI-67-905-A 0-SI-67-916 0-SI-67-919-A	
1-RFV-67-1020A	INSTR RM WATER CLR 1A ERCW RELIEF	0-47W845-2 / F-8	C	ACT	3	0.75	TRV	SA	C	O/C	N/A	RV	RV	1-SI-0-911	
1-RFV-67-1020B	INSTR RM WATER CLR 1B ERCW RELIEF	0-47W845-2 / E-8	C	ACT	3	0.75	TRV	SA	C	O/C	N/A	RV	RV	1-SI-0-911	

Appendix B - Valve Test Plan

VALVE ID	FUNCTION	DRAWING/COOR	CAT	ACT/ PASS	CLASS	SIZE	TYPE	ACT	POSITION			TEST REQ	FREQ	PROCEDURE	NOTES
									NORM	SAFE	FAIL				
1-RFV-67-1022	SD BD RM WTR CLR A-A ERCW RELIEF	0-47W845-2 / B-11	C	ACT	3	0.75	TRV	SA	C	O/C	N/A	RV	RV	1-SI-0-911	
1-RFV-67-1022A	CRD VENT COOLER 1A-A ERCW RELIEF	1-47W845-3 / H-4	C	ACT	3	0.75	TRV	SA	C	O/C	N/A	RV	RV	1-SI-0-911	
1-RFV-67-1022B	CRD VENT COOLER 1B-B ERCW RELIEF	1-47W845-3 / F-4	C	ACT	3	0.75	TRV	SA	C	O/C	N/A	RV	RV	1-SI-0-911	
1-RFV-67-1022C	CRD VENT COOLER 1C-A ERCW RELIEF	1-47W845-3 / G-4	C	ACT	3	0.75	TRV	SA	C	O/C	N/A	RV	RV	1-SI-0-911	
1-RFV-67-1022D	CRD VENT CLR 1D-B ERCW RELIEF	1-47W845-3 / D-4	C	ACT	3	0.75	TRV	SA	C	O/C	N/A	RV	RV	1-SI-0-911	
1-RFV-67-1024A	RCP MTR CLR 1 ERCW RELIEF	1-47W845-3 / H-3	C	ACT	3	0.75	TRV	SA	C	O/C	N/A	RV	RV	1-SI-0-911	
1-RFV-67-1024B	RCP MTR CLR 2 ERCW RELIEF	1-47W845-3 / F-3	C	ACT	3	0.75	TRV	SA	C	O/C	N/A	RV	RV	1-SI-0-911	
1-RFV-67-1024C	RCP MTR CLR 3 ERCW RELIEF	1-47W845-3 / G-3	C	ACT	3	0.75	TRV	SA	C	O/C	N/A	RV	RV	1-SI-0-911	
1-RFV-67-1024D	RCP MTR CLR 4 ERCW RELIEF	1-47W845-3 / D-3	C	ACT	3	0.75	TRV	SA	C	O/C	N/A	RV	RV	1-SI-0-911	
1-RFV-67-1025A	LWR CNTMT VENT CLR 1A-A ERCW RELIEF	1-47W845-3 / H-6	C	ACT	3	0.75	TRV	SA	C	O/C	N/A	RV	RV	1-SI-0-911	
1-RFV-67-1025B	LWR CNTMT VENT CLR 1B-B ERCW RELIEF	1-47W845-3 / F-6	C	ACT	3	0.75	TRV	SA	C	O/C	N/A	RV	RV	1-SI-0-911	
1-RFV-67-1025C	LWR CNTMT VENT CLR 1C-A ERCW RELIEF	1-47W845-3 / G-6	C	ACT	3	0.75	TRV	SA	C	O/C	N/A	RV	RV	1-SI-0-911	
1-RFV-67-1025D	LWR CNTMT VENT CLR 1D-B ERCW RELIEF	1-47W845-3 / D-6	C	ACT	3	0.75	TRV	SA	C	O/C	N/A	RV	RV	1-SI-0-911	
1-RFV-67-1026A	UPPER CNTMT VENT CLR 1A ERCW RELIEF	1-47W845-3 / C-3	C	ACT	3	0.75	TRV	SA	C	O/C	N/A	RV	RV	1-SI-0-911	
1-RFV-67-1026B	UPPER CNTMT VENT CLR 1B ERCW RELIEF	1-47W845-3 / B-3	C	ACT	3	0.75	TRV	SA	C	O/C	N/A	RV	RV	1-SI-0-911	
1-RFV-67-1026C	UPPER CNTMT VENT CLR 1C ERCW RELIEF	1-47W845-3 / B-3	C	ACT	3	0.75	TRV	SA	C	O/C	N/A	RV	RV	1-SI-0-911	
1-RFV-67-1026D	UPPER CNTMT VENT CLR 1D ERCW RELIEF	1-47W845-3 / A-3	C	ACT	3	0.75	TRV	SA	C	O/C	N/A	RV	RV	1-SI-0-911	
1-RFV-67-1027A	SPF/TBBP SPACE CLR 1A-A ERCW RELIEF	1-47W845-4 / B-4	C	ACT	3	0.75	TRV	SA	C	O/C	N/A	RV	RV	1-SI-0-911	
1-RFV-67-1027B	SFP/TBBP SPACE CLR 1B-B ERCW RELIEF	1-47W845-4 / B-7	C	ACT	3	0.75	TRV	SA	C	O/C	N/A	RV	RV	1-SI-0-911	
1-RFV-67-1028A	CCS/AFW PMP SPACE CLR 1A-A ERCW RELIEF	1-47W845-4 / B-3	C	ACT	3	0.75	TRV	SA	C	O/C	N/A	RV	RV	1-SI-0-911	

Appendix B - Valve Test Plan

VALVE ID	FUNCTION	DRAWING/COOR	CAT	ACT/ PASS	CLASS	SIZE	TYPE	ACT	POSITION			TEST REQ	FREQ	PROCEDURE	NOTES
									NORM	SAFE	FAIL				
1-RFV-67-1028B	CCS/AFW PMP SPACE CLR 1B-B ERCW RELIEF	1-47W845-4 / C-7	C	ACT	3	0.75	TRV	SA	C	O/C	N/A	RV	RV	1-SI-0-911	
1-RFV-67-1029A	CVCS CCP ROOM CLR 1A-A ERCW RELIEF	1-47W845-4 / C-2	C	ACT	3	0.75	TRV	SA	C	O/C	N/A	RV	RV	1-SI-0-911	
1-RFV-67-1029B	CVCS CCP ROOM CLR 1B-B ERCW RELIEF	1-47W845-4 / C-8	C	ACT	3	0.75	TRV	SA	C	O/C	N/A	RV	RV	1-SI-0-911	
1-RFV-67-1030	PDP ROOM CLR 1C ERCW RELIEF	1-47W845-4 / C-8	C	ACT	3	0.75	TRV	SA	C	O/C	N/A	RV	RV	1-SI-0-911	
1-RFV-67-1031A	SIS PMP RM CLR 1A-A ERCW RELIEF	1-47W845-4 / D-2	C	ACT	3	0.75	TRV	SA	C	O/C	N/A	RV	RV	1-SI-0-911	
1-RFV-67-1031B	SIS PMP RM CLR 1B-B ERCW RELIEF	1-47W845-4 / D-6	C	ACT	3	0.75	TRV	SA	C	O/C	N/A	RV	RV	1-SI-0-911	
1-RFV-67-1032A	CS PMP RM CLR 1A-A ERCW RELIEF	1-47W845-4 / D-2	C	ACT	3	0.75	TRV	SA	C	O/C	N/A	RV	RV	1-SI-0-911	
1-RFV-67-1032B	CS PMP RM CLR 1B-B ERCW RELIEF	1-47W845-4 / D-8	C	ACT	3	0.75	TRV	SA	C	O/C	N/A	RV	RV	1-SI-0-911	
1-RFV-67-1033A	RHR PMP RM CLR 1A-A ERCW RELIEF	1-47W845-4 / E-2	C	ACT	3	0.75	TRV	SA	C	O/C	N/A	RV	RV	1-SI-0-911	
1-RFV-67-1033B	RHR PMP RM CLR 1B-B ERCW RELIEF	1-47W845-4 / E-8	C	ACT	3	0.75	TRV	SA	C	O/C	N/A	RV	RV	1-SI-0-911	
1-RFV-67-1034A	PENT ROOM CLR 1A-A ERCW RELIEF	1-47W845-4 / F-2	C	ACT	3	0.75	TRV	SA	C	O/C	N/A	RV	RV	1-SI-0-911	
1-RFV-67-1034B	PENT ROOM CLR 1B-B ERCW RELIEF	1-47W845-4 / F-8	C	ACT	3	0.75	TRV	SA	C	O/C	N/A	RV	RV	1-SI-0-911	
1-RFV-67-1035A	PENT ROOM CLR 1A-A ERCW RELIEF	1-47W845-4 / F-3	C	ACT	3	0.75	TRV	SA	C	O/C	N/A	RV	RV	1-SI-0-911	
1-RFV-67-1035B	PENT ROOM CLR 1B-B ERCW RELIEF	1-47W845-4 / F-8	C	ACT	3	0.75	TRV	SA	C	O/C	N/A	RV	RV	1-SI-0-911	
1-RFV-67-1036A	PENT ROOM CLR 1A-A ERCW RELIEF	1-47W845-4 / F-2	C	ACT	3	0.75	TRV	SA	C	O/C	N/A	RV	RV	1-SI-0-911	
1-RFV-67-1036B	PENT ROOM CLR 1B-B ERCW RELIEF	1-47W845-4 / G-8	C	ACT	3	0.75	TRV	SA	C	O/C	N/A	RV	RV	1-SI-0-911	
1-RFV-67-1038A	PIPE CHASE CLR 1A-A ERCW RELIEF	1-47W845-4 / G-2	C	ACT	3	0.75	TRV	SA	C	O/C	N/A	RV	RV	1-SI-0-911	
1-RFV-67-1038B	PIPE CHASE CLR 1B-B ERCW RELIEF	1-47W845-4 / G-8	C	ACT	3	0.75	TRV	SA	C	O/C	N/A	RV	RV	1-SI-0-911	
1-RFV-67-1042A	STRAINER 1A-A ERCW RELIEF	0-47W845-1 / B-4	C	ACT	3	0.75	TRV	SA	C	O/C	N/A	RV	RV	1-SI-0-911	
1-RFV-67-1042B	STRAINER 1B-B ERCW RELIEF	0-47W845-1 / B-4	C	ACT	3	0.75	TRV	SA	C	O/C	N/A	RV	RV	1-SI-0-911	

Appendix B - Valve Test Plan

VALVE ID	FUNCTION	DRAWING/COOR	CAT	ACT/ PASS	CLASS	SIZE	TYPE	ACT	POSITION			TEST REQ	FREQ	PROCEDURE	NOTES
									NORM	SAFE	FAIL				
1-RFV-67-1060A	PRESSURE RELIEF VALVE ON ERCW	1-47W845-3 / H-8	A/C	ACT	2	0.75	TRV	SA	C	O/C	N/A	LTJ RV	AppJ RV		
1-RFV-67-1060B	PRESSURE RELIEF VALVE ON ERCW	1-47W845-3 / E-8	A/C	ACT	2	0.75	TRV	SA	C	O/C	N/A	LTJ RV	AppJ RV		
1-RFV-67-1060C	PRESSURE RELIEF VALVE ON ERCW	1-47W845-3 / G-8	A/C	ACT	2	0.75	TRV	SA	C	O/C	N/A	LTJ RV	AppJ RV		
1-RFV-67-1060D	PRESSURE RELIEF VALVE ON ERCW	1-47W845-3 / D-8	A/C	ACT	2	0.75	TRV	SA	C	O/C	N/A	LTJ RV	AppJ RV		
1-FCV-68-22	REACTOR VESSEL FLANGE LEAKOFF	1-47W813-1 / B-8	B	PASS	2	0.375	GL	AO	O	O	O	RPI	2Y	1-SI-68-904-A	
1-FCV-68-305	PRESSURIZER RELIEF TANK NITROGEN SUP FLOW CNTL	0-47W830-6 / G-7	A	ACT	2	0.75	GL	AO	O	C	C	RPI LTJ FSC STC	2Y AppJ Q Q	1-SI-68-904-A 1-SI-63-701 1-SI-68-901-A 1-SI-68-904-A 1-SI-68-901-A 1-SI-68-904-A	
1-FCV-68-307	PRESSURIZER RELIEF TANK GAS ANALYZER SUPPLY	0-47W625-8 / G-2	A	ACT	2	0.375	GL	AO	O	C	C	RPI LTJ FSC STC	2Y AppJ Q Q	1-SI-68-904-A 1-SI-63-701 1-SI-68-901-A 1-SI-68-904-A 1-SI-68-901-A 1-SI-68-904-A	

Appendix B - Valve Test Plan

VALVE ID	FUNCTION	DRAWING/COOR	CAT	ACT/ PASS	CLASS	SIZE	TYPE	ACT	POSITION			TEST REQ	FREQ	PROCEDURE	NOTES
									NORM	SAFE	FAIL				
1-FCV-68-308	PRESSURIZER RELIEF TANK GAS ANALYZER SUPPLY	0-47W625-8 / F-1	A	ACT	2	0.375	GL	AO	O	C	C	RPI	2Y	1-SI-68-904-B	
												LTJ	AppJ	1-SI-63-701	
												FSC	Q	1-SI-68-901-B 1-SI-68-904-B	
												STC	Q	1-SI-68-901-B 1-SI-68-904-B	
1-FCV-68-332	PRESSURIZER PORV BLOCK VALVE	1-47W813-1 / C-2	B	ACT	1	3	GA	MO	O	O/C	FAI	RPI	2Y	1-SI-68-904-B	
												STC	Q	1-SI-68-901-B 1-SI-68-904-B	
												STO	Q	1-SI-68-901-B 1-SI-68-904-B	
1-FCV-68-333	PRESSURIZER PORV BLOCK VALVE	1-47W813-1 / B-2	B	ACT	1	3	GA	MO	O	O/C	FAI	RPI	2Y	1-SI-68-904-A	
												STC	Q	1-SI-68-901-A 1-SI-68-904-A	
												STO	Q	1-SI-68-901-A 1-SI-68-904-A	
1-PCV-68-334	PRESSURIZER PORV	1-47W813-1 / C-1	B	ACT	1	3	GL	SO	C	O/C	C	RPI	2Y	1-SI-68-904-B	
												FSC	RO	1-SI-68-904-B	
												STC	RO	1-SI-68-904-B	
												STO	RO	1-SI-68-904-B	
1-PCV-68-340A	PRESSURIZER PORV	1-47W813-1 / B-1	B	ACT	1	3	GL	SO	C	O/C	C	RPI	2Y	1-SI-68-904-A	
												FSC	RO	1-SI-68-904-A	
												STC	RO	1-SI-68-904-A	
												STO	RO	1-SI-68-904-A	

Appendix B - Valve Test Plan

VALVE ID	FUNCTION	DRAWING/COOR	CAT	ACT/ PASS	CLASS	SIZE	TYPE	ACT	POSITION			TEST REQ	FREQ	PROCEDURE	NOTES
									NORM	SAFE	FAIL				
1-FSV-68-394	REACTOR VESSEL HEAD VENT	1-47W813-1 / F-7	B	ACT	2	1	GL	SO	C	O/C	C	RPI	2Y	1-SI-68-904-A	
												FSC	CSD	1-SI-68-904-A 1-SI-68-905-A	DTJ-26
												STC	CSD	1-SI-68-904-A 1-SI-68-905-A	DTJ-26
												STO	CSD	1-SI-68-904-A 1-SI-68-905-A	DTJ-26
1-FSV-68-395	REACTOR VESSEL HEAD VENT	1-47W813-1 / G-7	B	ACT	2	1	GL	SO	C	O/C	C	RPI	2Y	1-SI-68-904-B	
												FSC	CSD	1-SI-68-904-B 1-SI-68-905-B	DTJ-26
												STC	CSD	1-SI-68-904-B 1-SI-68-905-B	DTJ-26
												STO	CSD	1-SI-68-904-B 1-SI-68-905-B	DTJ-26
1-FSV-68-396	REACTOR VESSEL HEAD VENT	1-47W813-1 / F-5	B	ACT	2	1	GL	SO	C	O/C	C	RPI	2Y	1-SI-68-904-B	
												ET	CSD	1-SI-68-904-B 1-SI-68-905-B	IST-RR-3
												FSC	CSD	1-SI-68-904-B 1-SI-68-905-B	IST-RR-3
												RRA	RO	1-SI-68-904-B	IST-RR-3
1-FSV-68-397	REACTOR VESSEL HEAD VENT	1-47W813-1 / G-6	B	ACT	2	1	GL	SO	C	O/C	C	RPI	2Y	1-SI-68-904-A	
												ET	CSD	1-SI-68-904-A 1-SI-68-905-A	IST-RR-3
												FSC	CSD	1-SI-68-904-A 1-SI-68-905-A	IST-RR-3
												RRA	RO		IST-RR-3
1-CKV-68-559	SAFETY INJ SYS RELIEF DISCH CHECK	1-47W813-1 / H-4	C	ACT	2	4	CK	SA	C	O/C	N/A	CM	CM	1-SI-68-906	
1-RFV-68-563	PRESSURIZER SAFETY VALVE	1-47W813-1 / A-3	C	ACT	1	6	RV	SA	C	O/C	N/A	RV	RV	1-SI-0-902	
1-RFV-68-564	PRESSURIZER SAFETY VALVE	1-47W813-1 / A-2	C	ACT	1	6	RV	SA	C	O/C	N/A	RV	RV	1-SI-0-902	
1-RFV-68-565	PRESSURIZER SAFETY VALVE	1-47W813-1 / A-2	C	ACT	1	6	RV	SA	C	O/C	N/A	RV	RV	1-SI-0-902	
1-DRV-68-566	PRESSURIZER SAFETY VLV RFV-68-563 LOOP SEAL DR	1-47W813-1 / A-3	B	PASS	1	0.75	GL	M	LO	O	N/A	NTR	NTR		

Appendix B - Valve Test Plan

VALVE ID	FUNCTION	DRAWING/COOR	CAT	ACT/ PASS	CLASS	SIZE	TYPE	ACT	POSITION			TEST REQ	FREQ	PROCEDURE	NOTES
									NORM	SAFE	FAIL				
1-DRV-68-567	PRESSURIZER SAFETY VLV RFV-68-564 LOOP SEAL DR	1-47W813-1 / A-2	B	PASS	1	0.75	GL	M	LO	O	N/A	NTR	NTR		
1-DRV-68-568	PRESSURIZER SAFETY VLV RFV-68-565 LOOP SEAL DR	1-47W813-1 / A-2	B	PASS	1	0.75	GL	M	LO	O	N/A	NTR	NTR		
1-CKV-68-849	PRESSURIZER RELIEF TANK N2 SUP HDR CHECK	0-47W830-6 / G-7	A/C	ACT	2	1	CK	SA	O	C	N/A	LTJ	AppJ	1-SI-63-701	
												BDO	CSD	1-SI-77-902	DTJ-28
												CVC	CSD	1-SI-63-701 1-SI-77-902	DTJ-28
1-LCV-70-63	CCS SURGE TANK A MAKEUP	0-47W859-1 / F-3	B	ACT	3	3	GL	AO	C	O	C	RPI	2Y		
												FSC	Q		
												STO	Q		
1-FCV-70-66	UNIT 1 CCS SURGE TANK VENT	0-47W859-1 / E-3	B	ACT	3	2	ANG	AO	O	C	C	RPI	2Y		
												FSC	Q	1-SI-70-904-A 1-SI-70-908-A	
												STC	Q	1-SI-70-904-A 1-SI-70-908-A	
1-FCV-70-85	EXCESS LETDOWN HX CCS OUTLET	1-47W859-2 / D-10	A	ACT	2	6	BF	AO	C	C	C	RPI	2Y	1-SI-70-908-B	
												LTJ	AppJ	1-SI-70-701	
												FSC	Q	1-SI-70-908-B	
												STC	Q	1-SI-70-904-A 1-SI-70-908-B	
1-FCV-70-87	THERMAL BARRIER CCS RETURN	1-47W859-2 / H-9	A	ACT	2	3	GA	MO	O	C	FAI	RPI	2Y	1-SI-70-905-B 1-SI-70-908-B	
												LTJ	AppJ	1-SI-70-701	
												STC	RO	1-SI-70-905-B 1-SI-70-908-B	DTJ-31

Appendix B - Valve Test Plan

VALVE ID	FUNCTION	DRAWING/COOR	CAT	ACT/ PASS	CLASS	SIZE	TYPE	ACT	POSITION			TEST REQ	FREQ	PROCEDURE	NOTES
									NORM	SAFE	FAIL				
1-FCV-70-89	RCP OIL COOLER CCS RET HDR	1-47W859-2 / E-9	A	ACT	2	6	BF	MO	O	C	FAI	RPI	2Y	1-SI-70-905-B 1-SI-70-908-B	
												LTJ	AppJ	1-SI-70-701	
												STC	RO	1-SI-70-905-B 1-SI-70-908-B	DTJ-31
1-FCV-70-90	THERMAL BARRIER CCS RETURN	1-47W859-2 / F-10	A	ACT	2	3	GA	MO	O	C	FAI	RPI	2Y	1-SI-70-905-A 1-SI-70-908-A	
												LTJ	AppJ	1-SI-70-701	
												STC	RO	1-SI-70-905-A 1-SI-70-908-A	DTJ-31
1-FCV-70-92	RCP OIL COOLER CCS RETURN	1-47W859-2 / E-10	A	ACT	2	6	BF	MO	O	C	FAI	RPI	2Y	1-SI-70-905-A 1-SI-70-908-A	
												LTJ	AppJ	1-SI-70-701	
												STC	RO	1-SI-70-905-A 1-SI-70-908-A	DTJ-31
1-FCV-70-100	RCP OIL COOLERS CCS SUPPLY	1-47W859-2 / G-3	A	ACT	2	6	BF	MO	O	C	FAI	RPI	2Y	1-SI-70-905-A 1-SI-70-908-A	
												LTJ	AppJ	1-SI-70-701	
												STC	RO	1-SI-70-905-A 1-SI-70-908-A	DTJ-31
1-FCV-70-133	THERMAL BARRIER CCS SUPPLY	1-47W859-2 / H-3	B	ACT	3	3	GA	MO	O	C	FAI	RPI	2Y	1-SI-70-905-A	
												STC	RO	1-SI-70-905-A 1-SI-70-908-A	DTJ-31
1-FCV-70-134	THERMAL BARRIER CCS SUPPLY	1-47W859-2 / H-3	A	ACT	2	3	GA	MO	O	C	FAI	RPI	2Y	1-SI-70-905-B 1-SI-70-908-B	
												LTJ	AppJ	1-SI-70-701	
												STC	RO	1-SI-70-905-B 1-SI-70-908-B	DTJ-31
1-FCV-70-140	RCP OIL COOLER CCS SUPPLY	1-47W859-2 / G-3	A	ACT	2	6	BF	MO	O	C	FAI	RPI	2Y	1-SI-70-905-B 1-SI-70-908-B	
												LTJ	AppJ	1-SI-70-701	
												STC	RO	1-SI-70-905-B 1-SI-70-908-B	DTJ-31
1-FCV-70-143	EXCESS LETDOWN HX CCS SUPPLY	1-47W859-2 / E-3	A	ACT	2	6	BF	MO	O	C	FAI	RPI	2Y	1-SI-70-908-A	
												LTJ	AppJ	1-SI-70-701	
												STC	Q	1-SI-70-904-A 1-SI-70-908-A	

Appendix B - Valve Test Plan

VALVE ID	FUNCTION	DRAWING/COOR	CAT	ACT/ PASS	CLASS	SIZE	TYPE	ACT	POSITION			TEST REQ	FREQ	PROCEDURE	NOTES
									NORM	SAFE	FAIL				
1-FCV-70-153	RHR HEAT EXCHANGER 1B CCS OUTLET	0-47W859-4 / F-3	B	ACT	3	18	BF	MO	O/C	O/C	FAI	RPI STC STO	2Y Q Q	1-SI-70-908-B 1-SI-70-904-B 1-SI-70-908-B 1-SI-70-904-B 1-SI-70-908-B	
1-FCV-70-156	RHR HEAT EXCHANGER 1A CCS OUTLET	0-47W859-4 / F-4	B	ACT	3	18	BF	MO	C	O/C	FAI	RPI STC STO	2Y Q Q	1-SI-70-904-A 1-SI-70-908-A	
1-FCV-70-183	SAMPLE HEAT EXCHANGER CCS OUTLET	1-47W859-2 / C-9	B	ACT	3	3	GA	MO	O	C	FAI	RPI STC	2Y Q	1-SI-70-904-A 1-SI-70-908-A	
1-FCV-70-215	SAMPLE HEAT EXCHANGER CCS INLET	1-47W859-2 / A-8	B	ACT	3	3	GA	MO	O	C	FAI	RPI STC	2Y Q	1-SI-70-904-A 1-SI-70-908-A	
1-CKV-70-504A	CCS PUMP 1A-A DISCHARGE CHECK	0-47W859-1 / B-7	C	ACT	3	16	CK	SA	O/C	O/C	N/A	CVC CVO	Q Q	1-SI-70-901-A 1-SI-70-914-A 1-SI-70-901-A 1-SI-70-914-A	
1-CKV-70-504B	CCS PUMP 1B-B DISCHARGE CHECK	0-47W859-1 / C-7	C	ACT	3	16	CK	SA	O/C	O/C	N/A	CVC CVO	Q Q	1-SI-70-901-A 1-SI-70-914-A 1-SI-70-914-B 1-SI-70-901-B 1-SI-70-914-B	
1-RFV-70-521	WASTE GAS COMPR A HX CCS OUTLET RELIEF	0-47W859-1 / A-10	C	ACT	3	0.75	TRV	SA	C	O/C	N/A	RV	RV	1-SI-0-911	
1-CKV-70-535	CCS SEAL LEAKAGE RETURN PUMP A DISCH CHECK	0-47W859-1 / H-7	C	ACT	3	1.5	CK	SA	O/C	C	N/A	BDO CVC	Q Q		
1-ISV-70-536	CCS SEAL LEAKAGE RETURN PUMP A DISCH ISOL	0-47W859-1 / G-7	B	PASS	3	1.5	GL	M	C	C	N/A	NTR	NTR		
1-RFV-70-538	UNIT 1 CCS SURGE TANK RELIEF	0-47W859-1 / E-3	C	ACT	3	3	RV	SA	C	O/C	N/A	RV	RV	1-SI-0-902	
1-RFV-70-539	UNIT 1 CCS SURGE TANK RELIEF	0-47W859-1 / E-3	C	ACT	3	3	RV	SA	C	O/C	N/A	RV	RV	1-SI-0-902	DTJ-29

Appendix B - Valve Test Plan

VALVE ID	FUNCTION	DRAWING/COOR	CAT	ACT/ PASS	CLASS	SIZE	TYPE	ACT	POSITION			TEST REQ	FREQ	PROCEDURE	NOTES
									NORM	SAFE	FAIL				
1-CKV-70-541	UNIT 1 CCS SURGE TANK DEMIN WATER MAKEUP CKV	0-47W859-1 / F-2	C	ACT	3	3	CK	SA	O/C	C	N/A	CM	CM		
1-ISV-70-542	ERCW FLOOD MODE UNIT 1 SURGE TANK SUP	0-47W859-1 / F-2	B	ACT	3	3	GA	M	C	O	N/A	MS	2Y		
1-RFV-70-551A	RHR HEAT EXCHANGER 1A-A CCS OUTLET RELIEF	0-47W859-4 / E-5	C	ACT	3	1.5	RV	SA	C	O/C	N/A	RV	RV	1-SI-0-902	
1-RFV-70-551B	RHR HEAT EXCHANGER 1B-B CCS OUTLET RELIEF	0-47W859-4 / E-2	C	ACT	3	1.5	RV	SA	C	O/C	N/A	RV	RV	1-SI-0-902	
1-RFV-70-556A	CCP 1A-A OIL COOLERS CCS OUTLET RELIEF	0-47W859-4 / A-4	C	ACT	3	0.75	RV	SA	C	O/C	N/A	RV	RV	1-SI-0-902	
1-RFV-70-556B	CCP 1B-B OIL COOLERS CCS OUTLET RELIEF	0-47W859-4 / A-2	C	ACT	3	0.75	RV	SA	C	O/C	N/A	RV	RV	1-SI-0-902	
1-RFV-70-561A	SI PUMP 1A-A LUBE OIL COOLER CCS OUT RELIEF	0-47W859-4 / B-4	C	ACT	3	0.75	TRV	SA	C	O/C	N/A	RV	RV	1-SI-0-911	
1-RFV-70-561B	SI PUMP 1B-B LUBE OIL COOLER CCS OUT RELIEF	0-47W859-4 / B-3	C	ACT	3	0.75	TRV	SA	C	O/C	N/A	RV	RV	1-SI-0-911	
1-RFV-70-565A	RHR PMP 1A-A SEAL WATER HX CCS OUTLET RELIEF	0-47W859-4 / C-4	C	ACT	3	0.75	RV	SA	C	O/C	N/A	RV	RV	1-SI-0-902	
1-RFV-70-565B	RHR PMP 1B-B SEAL WATER HX CCS OUTLET RELIEF	0-47W859-4 / C-2	C	ACT	3	0.75	RV	SA	C	O/C	N/A	RV	RV	1-SI-0-902	
1-RFV-70-570A	CS PUMP 1A-A OIL HX CCS OUTLET RELIEF	0-47W859-4 / D-4	C	ACT	3	0.75	TRV	SA	C	O/C	N/A	RV	RV	1-SI-0-911	
1-RFV-70-570B	CS PUMP 1B-B OIL HX CCS OUTLET RELIEF	0-47W859-4 / D-3	C	ACT	3	0.75	TRV	SA	C	O/C	N/A	RV	RV	1-SI-0-911	
1-RFV-70-578	CVCS LETDOWN HX 1A CCS OUTLET RELIEF	1-47W859-2 / A-7	C	ACT	3	0.75	RV	SA	C	O/C	N/A	RV	RV	1-SI-0-902	
1-RFV-70-584	CVCS SEAL WATER HX 1A CCS OUTLET RELIEF	1-47W859-2 / B-6	C	ACT	3	0.75	TRV	SA	C	O/C	N/A	RV	RV	1-SI-0-911	

Appendix B - Valve Test Plan

VALVE ID	FUNCTION	DRAWING/COOR	CAT	ACT/ PASS	CLASS	SIZE	TYPE	ACT	POSITION			TEST REQ	FREQ	PROCEDURE	NOTES
									NORM	SAFE	FAIL				
1-CKV-70-679	RCP THERMAL BARRIER CCS SUP HDR CHECK	1-47W859-2 / H-3	A/C	ACT	2	3	CK	SA	O	C	N/A	LTJ	AppJ	1-SI-70-701	
												BDO	RO	1-FOR-70-4 1-FOR-70-5	DTJ-31
												CVC	RO	1-SI-70-701 1-SI-70-907	DTJ-31
1-CKV-70-681A	RCP 1 THERMAL BARRIER CCS SUPPLY CHECK	1-47W859-2 / G-8	C	ACT	3	2	CK	SA	O	C	N/A	CM	CM		
1-CKV-70-681B	RCP 2 THERMAL BARRIER CCS SUPPLY CHECK	1-47W859-2 / F-8	C	ACT	3	2	CK	SA	O	C	N/A	CM	CM		
1-CKV-70-681C	RCP 3 THERMAL BARRIER CCS SUPPLY CHECK	1-47W859-2 / F-8	C	ACT	3	2	CK	SA	O	C	N/A	CM	CM	1-SI-70-911	
1-CKV-70-681D	RCP 4 THERMAL BARRIER CCS SUPPLY CHECK	1-47W859-2 / H-8	C	ACT	3	2	CK	SA	O	C	N/A	CM	CM	1-SI-70-911	
1-CKV-70-682A	RCP 1 THERMAL BARRIER CCS SUPPLY CHECK	1-47W859-2 / G-8	C	ACT	3	2	CK	SA	O	C	N/A	CM	CM	1-SI-70-911	
1-CKV-70-682B	RCP 2 THERMAL BARRIER CCS SUPPLY CHECK	1-47W859-2 / F-8	C	ACT	3	2	CK	SA	O	C	N/A	CM	CM	1-SI-70-911	
1-CKV-70-682C	RCP 3 THERMAL BARRIER CCS SUPPLY CHECK	1-47W859-2 / E-8	C	ACT	3	2	CK	SA	O	C	N/A	CM	CM	1-SI-70-911	
1-CKV-70-682D	RCP 4 THERMAL BARRIER CCS SUPPLY CHECK	1-47W859-2 / H-9	C	ACT	3	2	CK	SA	O	C	N/A	CM	CM	1-SI-70-911	
1-RFV-70-683A	RCP 1 THERMAL BARRIER CCS RETURN RELIEF	1-47W859-2 / G-8	C	ACT	3	0.75	TRV	SA	C	O/C	N/A	RV	RV	1-SI-0-911	
1-RFV-70-683B	RCP 2 THERMAL BARRIER CCS RETURN RELIEF	1-47W859-2 / F-8	C	ACT	3	0.75	TRV	SA	C	O/C	N/A	RV	RV	1-SI-0-911	
1-RFV-70-683C	RCP 3 THERMAL BARRIER CCS RETURN RELIEF	1-47W859-2 / E-8	C	ACT	3	0.75	TRV	SA	C	O/C	N/A	RV	RV	1-SI-0-911	
1-RFV-70-683D	RCP 4 THERMAL BARRIER CCS RETURN RELIEF	1-47W859-2 / H-8	C	ACT	3	0.75	TRV	SA	C	O/C	N/A	RV	RV	1-SI-0-911	

Appendix B - Valve Test Plan

VALVE ID	FUNCTION	DRAWING/COOR	CAT	ACT/ PASS	CLASS	SIZE	TYPE	ACT	POSITION			TEST REQ	FREQ	PROCEDURE	NOTES
									NORM	SAFE	FAIL				
1-RFV-70-687	PRESSURE RELIEF ON CCS	1-47W859-2 / H-9	A/C	ACT	2	0.75	TRV	SA	C	O/C	N/A	LTJ RV	AppJ RV		
1-RFV-70-694	RCP OIL COOLER CCS SUPPLY RELIEF	1-47W859-2 / F-4	C	ACT	3	0.75	TRV	SA	C	O/C	N/A	RV	RV	1-SI-0-911	
1-RFV-70-698	PRESSURE RELIEF ON CCS	1-47W859-2 / E-10	A/C	ACT	2	0.75	TRV	SA	C	O/C	N/A	LTJ RV	AppJ RV		
1-RFV-70-703	EXCESS LETDOWN HX CCS OUT RELIEF	1-47W859-2 / E-5	A/C	ACT	2	3	RV	SA	C	O/C	N/A	LTJ RV	AppJ RV	1-SI-70-701 1-SI-0-902	
1-ISV-70-766	POST ACCIDENT SAMP CLR CCS SUPPLY ISOL	1-47W859-2 / D-1	B	PASS	3	2	GL	M	LC	C	N/A	NTR	NTR		
1-ISV-70-770	POST ACCIDENT SAMP CLR CCS RET HDR ISOLATION	1-47W859-2 / D-3	B	PASS	3	2	GL	M	LC	C	N/A	NTR	NTR		
1-RFV-70-790	PRESSURE RELIEF ON CCS	1-47W859-2 / G-3	A/C	ACT	2	0.75	TRV	SA	C	O/C	N/A	LTJ RV	AppJ RV		
1-RFV-70-835	RCP THERMAL BARRIER CCS SUP HDR RLF	1-47W859-2 / H-6	C	ACT	3	0.75	RV	SA	C	O/C	N/A	RV	RV	1-SI-0-902	
1-FCV-72-2	CNTMT SPRAY HDR B ISOLATION	1-47W812-1 / A-3	A	ACT	2	10	GA	MO	C	O/C	FAI	RPI LT STC STO	2Y AppJ Q Q	1-SI-72-902-B 1-SI-72-906-B 1-SI-72-902-B 1-SI-72-906-B	CLOC LT
1-FCV-72-13	CNTMT SPRAY PUMP 1B-B MINIFLOW	1-47W812-1 / B-6	B	ACT	2	2	GL	MO	C	O/C	FAI	RPI STC STO	2Y Q Q	1-SI-72-902-B 1-SI-72-906-B 1-SI-72-902-B 1-SI-72-906-B 1-SI-72-902-B 1-SI-72-906-B	

Appendix B - Valve Test Plan

VALVE ID	FUNCTION	DRAWING/COOR	CAT	ACT/ PASS	CLASS	SIZE	TYPE	ACT	POSITION			TEST REQ	FREQ	PROCEDURE	NOTES
									NORM	SAFE	FAIL				
1-FCV-72-21	RWST TO CNTMT SPRAY PUMP 1B-B SUCTION	1-47W812-1 / B-10	B	ACT	2	12	GA	MO	O	O/C	FAI	RPI STC STO	2Y Q Q	1-SI-72-902-B 1-SI-72-906-B 1-SI-72-902-B 1-SI-72-906-B	
1-FCV-72-22	RWST TO CNTMT SPRAY PUMP 1A-A SUCTION	1-47W812-1 / C-10	B	ACT	2	12	GA	MO	O	O/C	FAI	RPI STC STO	2Y Q Q	1-SI-72-902-A 1-SI-72-906-A 1-SI-72-902-A 1-SI-72-906-A	
1-FCV-72-34	CNTMT SPRAY PMP 1A-A MINIFLOW	1-47W812-1 / C-6	B	ACT	2	2	GL	MO	C	O/C	FAI	RPI STC STO	2Y Q Q	1-SI-72-902-A 1-SI-72-906-A 1-SI-72-902-A 1-SI-72-906-A 1-SI-72-902-A 1-SI-72-906-A	
1-FCV-72-39	CNTMT SPRAY HDR A ISOLATION	1-47W812-1 / C-3	A	ACT	2	10	GA	MO	C	O/C	FAI	RPI LT STC STO	2Y AppJ Q Q	1-SI-72-902-A 1-SI-72-906-A 1-SI-72-902-A 1-SI-72-906-A	
1-RFV-72-40	1-FCV-72-40 BONNET PRESS RELIEF	1-47W812-1 / F-3	A/C	ACT	2	0.75	TRV	SA	C	O/C	N/A	LT RV	AppJ RV	 1-SI-0-902	CLOC LT
1-FCV-72-40	RHR SPRAY HDR A ISOLATION	1-47W812-1 / F-3	A	ACT	2	8	GA	MO	C	O/C	FAI	RPI LT STC STO	2Y AppJ RO RO	1-SI-63-915-A 1-SI-63-903-A 1-SI-63-915-A	 CLOC LT DTJ-04 DTJ-04
1-RFV-72-41	1-FCV-72-41 BONNET PRESS RELIEF	1-47W812-1 / E-3	A/C	ACT	2	0.75	TRV	SA	C	O/C	N/A	LT RV	AppJ RV	 1-SI-0-902	CLOC LT

Appendix B - Valve Test Plan

VALVE ID	FUNCTION	DRAWING/COOR	CAT	ACT/ PASS	CLASS	SIZE	TYPE	ACT	POSITION			TEST REQ	FREQ	PROCEDURE	NOTES
									NORM	SAFE	FAIL				
1-FCV-72-41	RHR SPRAY HDR B ISOLATION	1-47W812-1 / E-3	A	ACT	2	8	GA	MO	C	O/C	FAI	RPI	2Y	1-SI-63-915-A	
												LT	AppJ		CLOC LT
												STC	RO		DTJ-04
												STO	RO	1-SI-63-903-A 1-SI-63-915-A	DTJ-04
1-FCV-72-44	CNTMT SUMP TO CS PUMP 1A-A SUCTION	1-47W812-1 / G-3	B	ACT	2	12	GA	MO	C	O/C	FAI	RPI	2Y	1-SI-63-915-A	
												STC	RO		DTJ-24
												STO	RO	1-SI-63-903-A 1-SI-63-915-A	DTJ-24
1-FCV-72-45	CNTMT SUMP TO CS PUMP 1B-B SUCTION	1-47W812-1 / H-3	B	ACT	2	12	GA	MO	C	O/C	FAI	RPI	2Y	1-SI-63-915-A	
												STC	RO		DTJ-24
												STO	RO	1-SI-63-903-A 1-SI-63-915-A	DTJ-24
1-CKV-72-506	CNTMT SPRAY PMP 1A-A SUCTION CHECK	1-47W812-1 / C-10	C	ACT	2	12	CK	SA	C	O/C	N/A	CVC	Q	1-SI-72-904-A	
												CVO	Q	1-SI-72-901-A 1-SI-72-908-A	
1-CKV-72-507	CNTMT SPRAY PMP 1B-B SUCTION CHECK	1-47W812-1 / B-10	C	ACT	2	12	CK	SA	C	O/C	N/A	CVC	Q	1-SI-72-904-B	
												CVO	Q	1-SI-72-901-B 1-SI-72-908-B	
1-RFV-72-508	CNTMT SPRAY PMP 1A-A SUCTION RELIEF	1-47W812-1 / C-9	C	ACT	2	0.75	RV	SA	C	O/C	N/A	RV	RV	1-SI-0-902	
1-RFV-72-509	CNTMT SPRAY PMP 1B-B SUCTION RELIEF	1-47W812-1 / A-9	C	ACT	2	0.75	RV	SA	C	O/C	N/A	RV	RV	1-SI-0-902	
1-CKV-72-524	CNTMT SPRAY PMP 1A-A DISCH CHECK	1-47W812-1 / D-6	C	ACT	2	10	CK	SA	C	O	N/A	BDC	Q	1-SI-72-904-A	
												CVO	Q	1-SI-72-901-A 1-SI-72-908-A	
1-CKV-72-525	CNTMT SPRAY PMP 1B-B DISCH CHECK	1-47W812-1 / A-6	C	ACT	2	10	CK	SA	C	O	N/A	BDC	Q	1-SI-72-904-B	
												CVO	Q	1-SI-72-901-B 1-SI-72-908-B	

Appendix B - Valve Test Plan

VALVE ID	FUNCTION	DRAWING/COOR	CAT	ACT/ PASS	CLASS	SIZE	TYPE	ACT	POSITION			TEST REQ	FREQ	PROCEDURE	NOTES
									NORM	SAFE	FAIL				
1-CKV-72-548	CNTMT SPRAY HDR A CNTMT CHECK VALVE	1-47W812-1 / D-2	C	ACT	2	10	CK	SA	C	O/C	N/A	CM	CM	1-SI-72-907	
1-CKV-72-549	CNTMT SPRAY HDR B CNTMT CHECK VALVE	1-47W812-1 / A-2	C	ACT	2	10	CK	SA	C	O/C	N/A	CM	CM	1-SI-72-907	
1-CKV-72-562	RHR SPRAY HDR A CNTMT CHECK VALVE	1-47W812-1 / F-2	C	ACT	2	8	CK	SA	C	O/C	N/A	CM	CM	1-SI-72-907	
1-CKV-72-563	RHR SPRAY HDR B CNTMT CHECK VALVE	1-47W812-1 / E-2	C	ACT	2	8	CK	SA	C	O/C	N/A	CM	CM	1-SI-72-907	
1-FCV-74-1	LOOP 4 HOT LEG TO RHR SUCTION	1-47W810-1 / G-2	A	ACT	1	14	GA	MO	LC	O/C	FAI	LTP	2Y	1-SI-0-905	PIV
												RPI	2Y	1-SI-74-904-A	
												STC	CSD		DTJ-17
												STO	CSD	1-SI-74-903 1-SI-74-904-A	DTJ-17
1-FCV-74-2	LOOP 4 HOT LEG TO RHR SUCTION	1-47W810-1 / G-3	A	ACT	1	14	GA	MO	LC	O/C	FAI	LTP	2Y	1-SI-0-905	PIV
												RPI	2Y	1-SI-74-904-B	
												STC	CSD	1-SI-74-904-B	DTJ-17
												STO	CSD	1-SI-74-903	DTJ-17
1-FCV-74-3	RHR PUMP 1A-A SUCTION	1-47W810-1 / F-9	B	ACT	2	14	GA	MO	O	O/C	FAI	RPI	2Y	1-SI-74-904-A	
												STC	Q	1-SI-74-902-A 1-SI-74-904-A	
												STO	Q		
1-FCV-74-8	1-FCV-74-2 BYPASS RHR SUCTION	1-47W810-1 / G-3	A	ACT	1	10	GA	MO	LC	O/C	FAI	LTP	2Y	1-SI-0-905	PIV
												RPI	2Y	1-SI-74-904-A	
												STC	CSD		DTJ-17
												STO	CSD	1-SI-74-903 1-SI-74-904-A	DTJ-17

Appendix B - Valve Test Plan

VALVE ID	FUNCTION	DRAWING/COOR	CAT	ACT/ PASS	CLASS	SIZE	TYPE	ACT	POSITION			TEST REQ	FREQ	PROCEDURE	NOTES
									NORM	SAFE	FAIL				
1-FCV-74-9	1-FCV-74-1 BYPASS RHR SUCTION	1-47W810-1 / G-2	A	ACT	1	10	GA	MO	LC	O/C	FAI	LTP	2Y	1-SI-0-905	PIV
												RPI	2Y	1-SI-74-904-B	
												STC	CSD	1-SI-74-904-B	DTJ-17
												STO	CSD	1-SI-74-903	DTJ-17
1-FCV-74-12	RHR PUMP 1A-A MINIMUM FLOW	1-47W810-1 / G-7	B	ACT	2	3	GL	MO	O	O/C	FAI	RPI	2Y	1-SI-74-904-A	
												STC	Q	1-SI-74-902-A 1-SI-74-904-A	
												STO	Q	1-SI-74-902-A 1-SI-74-904-A	
1-FCV-74-16	RHR HEAT EXCHANGER A OUTLET FLOW CONTROL	1-47W810-1 / F-4	B	PASS	2	8	DIA	AO	O	O	N/A	RPI	2Y		
1-FCV-74-21	RHR PUMP 1B-B SUCTION	1-47W810-1 / C-9	B	ACT	2	14	GA	MO	O	O/C	FAI	RPI	2Y	1-SI-74-904-B	
												STC	Q	1-SI-74-902-B 1-SI-74-904-B	
												STO	Q		
1-FCV-74-24	RHR PUMP 1B-B MINIMUM FLOW	1-47W810-1 / B-6	B	ACT	2	3	GL	MO	O	O/C	FAI	RPI	2Y	1-SI-74-904-B	
												STC	Q	1-SI-74-902-B 1-SI-74-904-B	
												STO	Q	1-SI-74-902-B	
1-FCV-74-28	RHR HEAT EXCHANGER B OUTLET FLOW CONTROL	1-47W810-1 / C-4	B	PASS	2	8	DIA	AO	O	O	N/A	RPI	2Y		
1-FCV-74-33	RHR HEAT EXCHANGER 1A OUTLET CROSSTIE	1-47W810-1 / E-4	B	ACT	2	8	GA	MO	O	O/C	FAI	RPI	2Y	1-SI-74-904-A	
												STC	CSD	1-SI-74-903 1-SI-74-904-A	DTJ-25
												STO	CSD		DTJ-25

Appendix B - Valve Test Plan

VALVE ID	FUNCTION	DRAWING/COOR	CAT	ACT/ PASS	CLASS	SIZE	TYPE	ACT	POSITION			TEST REQ	FREQ	PROCEDURE	NOTES
									NORM	SAFE	FAIL				
1-FCV-74-35	RHR HEAT EXCHANGER 1B OUTLET CROSSTIE	1-47W810-1 / C-4	B	ACT	2	8	GA	MO	O	O/C	FAI	RPI	2Y	1-SI-74-904-B	
												STC	CSD	1-SI-74-903 1-SI-74-904-B	DTJ-25
												STO	CSD		DTJ-25
1-RFV-74-505	RHR PUMP SUCTION HDR RELIEF	1-47W810-1 / H-3	C	ACT	2	3	RV	SA	C	O/C	N/A	RV	RV	1-SI-0-902	
1-CKV-74-514	RHR PUMP 1A-A DISCHARGE CHECK	1-47W810-1 / F-8	C	ACT	2	8	CK	SA	C	O/C	N/A	CVC	RO	1-SI-63-907	DTJ-18
												CVO	RO	1-SI-63-907	DTJ-18
1-CKV-74-515	RHR PUMP 1B-B DISCHARGE CHECK	1-47W810-1 / C-8	C	ACT	2	8	CK	SA	C	O/C	N/A	CVC	RO	1-SI-63-907	DTJ-18
												CVO	RO	1-SI-63-907	DTJ-18
1-CKV-74-544	RHR HEADER 1A MINIMUM FLOW CHECK	1-47W810-1 / F-5	C	ACT	2	8	CK	SA	C	O/C	N/A	CVC	RO	1-SI-74-901-B	DTJ-30
												CVO	RO	1-SI-63-907	DTJ-30
1-CKV-74-545	RHR HEADER 1B MINIMUM FLOW CHECK	1-47W810-1 / C-5	C	ACT	2	8	CK	SA	C	O/C	N/A	CVC	RO	1-SI-74-901-A	DTJ-30
												CVO	RO	1-SI-63-907	DTJ-30
1-FCV-77-9	RCDT PUMP DISCHARGE FLOW CONTROL	0-47W830-1 / D-1	A	ACT	2	3	DIA	AO	O	C	C	RPI	2Y	1-SI-77-901-B 1-SI-77-904-B	
												LTJ	AppJ	1-SI-77-701	
												FSC	Q	1-SI-77-901-B 1-SI-77-904-B	
												STC	Q	1-SI-77-901-B 1-SI-77-904-B	
1-FCV-77-10	RCDT PUMP DISCHARGE FLOW CONTROL	0-47W830-1 / E-1	A	ACT	2	3	DIA	AO	O	C	C	RPI	2Y	1-SI-77-901-A 1-SI-77-904-A	
												LTJ	AppJ	1-SI-77-701	
												FSC	Q	1-SI-77-901-A 1-SI-77-904-A	
												STC	Q	1-SI-77-901-A 1-SI-77-904-A	

Appendix B - Valve Test Plan

VALVE ID	FUNCTION	DRAWING/COOR	CAT	ACT/ PASS	CLASS	SIZE	TYPE	ACT	POSITION			TEST REQ	FREQ	PROCEDURE	NOTES
									NORM	SAFE	FAIL				
1-FCV-77-16	RCDT TO GAS ANALYZER FLOW CONTROL	0-47W830-1 / B-5	A	ACT	2	0.75	DIA	AO	O	C	C	RPI	2Y	1-SI-77-901-B 1-SI-77-904-B	
												LTJ	AppJ	1-SI-77-701	
												FSC	Q	1-SI-77-901-B 1-SI-77-904-B	
												STC	Q	1-SI-77-901-B 1-SI-77-904-B	
1-FCV-77-17	RCDT TO GAS ANALYZER FLOW CONTROL	0-47W830-1 / B-6	A	ACT	2	0.75	DIA	AO	O	C	C	RPI	2Y	1-SI-77-901-A 1-SI-77-904-A	
												LTJ	AppJ	1-SI-77-701	
												FSC	Q	1-SI-77-901-A 1-SI-77-904-A	
												STC	Q	1-SI-77-901-A 1-SI-77-904-A	
1-FCV-77-18	RCDT TO VENT HDR FLOW CONTROL	0-47W830-1 / B-5	A	ACT	2	1	DIA	AO	O	C	C	RPI	2Y	1-SI-77-901-B 1-SI-77-904-B	
												LTJ	AppJ	1-SI-77-701	
												FSC	Q	1-SI-77-901-B 1-SI-77-904-B	
												STC	Q	1-SI-77-901-B 1-SI-77-904-B	
1-FCV-77-19	RCDT TO VENT HDR FLOW CONTROL	0-47W830-1 / B-5	A	ACT	2	1	DIA	AO	O	C	C	RPI	2Y	1-SI-77-901-A 1-SI-77-904-A	
												LTJ	AppJ	1-SI-77-701	
												FSC	Q	1-SI-77-901-A 1-SI-77-904-A	
												STC	Q	1-SI-77-901-A 1-SI-77-904-A	
1-FCV-77-20	RCDT N2 SUPPLY FLOW CONTROL	0-47W830-1 / C-5	A	ACT	2	1	DIA	AO	O	C	C	RPI	2Y	1-SI-77-901-A 1-SI-77-904-A	
												LTJ	AppJ	1-SI-77-701	
												FSC	Q	1-SI-77-901-A 1-SI-77-904-A	
												STC	Q	1-SI-77-901-A 1-SI-77-904-A	

Appendix B - Valve Test Plan

VALVE ID	FUNCTION	DRAWING/COOR	CAT	ACT/ PASS	CLASS	SIZE	TYPE	ACT	POSITION			TEST REQ	FREQ	PROCEDURE	NOTES
									NORM	SAFE	FAIL				
1-FCV-77-127	RB SUMP DISCHARGE FLOW CONTROL	1-47W851-1 / F-7	A	ACT	2	2	PLG	AO	O	C	C	RPI LTJ FSC STC	2Y AppJ Q Q	1-SI-77-901-B 1-SI-77-904-B 1-SI-77-701 1-SI-77-901-B 1-SI-77-904-B	
1-FCV-77-128	RB SUMP DISCHARGE FLOW CONTROL	1-47W851-1 / F-7	A	ACT	2	2	PLG	AO	O	C	C	RPI LTJ FSC STC	2Y AppJ Q Q	1-SI-77-901-A 1-SI-77-904-A 1-SI-77-701 1-SI-77-901-A 1-SI-77-904-A	
1-RFV-77-2875	RB SUMP DISCH RLF	1-47W851-1 / F-7	A/C	ACT	2	2	TRV	SA	C	O/C	N/A	LTJ RV	AppJ RV	1-SI-77-701 1-SI-0-902	
1-ISV-78-557	UNIT 1 REFLG CAVITY SUP HDR ISOL	0-47W855-1 / G-7	A	PASS	2	4	DIA	M	LC	C	N/A	LTJ	AppJ		
1-ISV-78-558	UNIT 1 REFLG CAVITY SUP HDR ISOL	0-47W855-1 / G-8	A	PASS	2	4	DIA	M	LC	C	N/A	LTJ	AppJ		
1-ISV-78-560	UNIT 1 REFLG CAVITY RETURN HDR ISOL	0-47W855-1 / H-8	A	PASS	2	6	DIA	M	LC	C	N/A	LTJ	AppJ		
1-ISV-78-561	UNIT 1 REFLG CAVITY RETURN HDR ISOL	0-47W855-1 / H-7	A	PASS	2	6	DIA	M	LC	C	N/A	LTJ	AppJ		
1-FCV-81-12	PRIMARY WATER TO PRT AND RCP STANDPIPES	0-47W819-1 / F-4	A	ACT	2	3	DIA	AO	O	C	C	RPI LTJ FSC STC	2Y AppJ Q Q	1-SI-81-903 1-SI-81-701 1-SI-81-901 1-SI-81-903 1-SI-81-701 1-SI-81-901 1-SI-81-903	
1-CKV-81-502	PRIMARY WATER CNTMT HDR CHECK VLV	0-47W819-1 / F-4	A/C	ACT	2	3	CK	SA	O	C	N/A	LTJ CM	AppJ CM	1-SI-81-701 1-SI-81-701	
1-RFV-82-511A1	DG ENG 1A1 START AIR RCVR A RELIEF	1-47W839-1 / C-3	C	ACT	3	0.75	RV	SA	C	O/C	N/A	RV	RV		Class C*

Appendix B - Valve Test Plan

VALVE ID	FUNCTION	DRAWING/COOR	CAT	ACT/ PASS	CLASS	SIZE	TYPE	ACT	POSITION			TEST REQ	FREQ	PROCEDURE	NOTES
									NORM	SAFE	FAIL				
1-RFV-82-511B1	DG ENG 1B1 START AIR RCVR A RELIEF	1-47W839-1A / C-3	C	ACT	3	0.75	RV	SA	C	O/C	N/A	RV	RV		Class C*
1-RFV-82-513A1	DG ENG 1A1 START AIR RCVR B RELIEF	1-47W839-1 / B-3	C	ACT	3	0.75	RV	SA	C	O/C	N/A	RV	RV		Class C*
1-RFV-82-513B1	DG ENG 1B1 START AIR RCVR B RELIEF	1-47W839-1A / B-3	C	ACT	3	0.75	RV	SA	C	O/C	N/A	RV	RV		Class C*
1-RFV-82-545A2	DG ENG 1A2 START AIR RCVR A RELIEF	1-47W839-1 / C-10	C	ACT	3	0.75	RV	SA	C	O/C	N/A	RV	RV		Class C*
1-RFV-82-545B2	DG ENG 1B2 START AIR RCVR A RELIEF	1-47W839-1A / D-10	C	ACT	3	0.75	RV	SA	C	O/C	N/A	RV	RV		Class C*
1-RFV-82-547A2	DG ENG 1A2 START AIR RCVR B RELIEF	1-47W839-1 / B-10	C	ACT	3	0.75	RV	SA	C	O/C	N/A	RV	RV		Class C*
1-RFV-82-547B2	DG ENG 1B2 START AIR RCVR B RELIEF	1-47W839-1A / B-10	C	ACT	3	0.75	RV	SA	C	O/C	N/A	RV	RV		Class C*
1-ISV-84-530	RCDT PMPS DISCH ISOL TO FLOOD MODE AUX BORATION	0-47W809-7 / F-7	A	PASS	2	1	GL	M	LC	C	N/A	LTJ	AppJ	1-SI-77-701	
1-FCV-90-107	CNTMT BLDG LOWER COMPT AIR RAD MON SUPPLY	1-47W610-90-3 / A-9	A	ACT	2	1.5	GL	AO	O	C	C	RPI	2Y	1-SI-90-901-A 1-SI-90-902-A	
												LTJ	AppJ	1-SI-90-701	
												FSC	Q	1-SI-90-901-A 1-SI-90-902-A	
												STC	Q	1-SI-90-901-A 1-SI-90-902-A	

Appendix B - Valve Test Plan

VALVE ID	FUNCTION	DRAWING/COOR	CAT	ACT/ PASS	CLASS	SIZE	TYPE	ACT	POSITION			TEST REQ	FREQ	PROCEDURE	NOTES
									NORM	SAFE	FAIL				
1-FCV-90-108	CNTMT BLDG LOWER COMPT AIR RAD MON SUPPLY	1-47W610-90-3 / C-8	A	ACT	2	1.5	GL	AO	O	C	C	RPI	2Y	1-SI-90-901-B 1-SI-90-902-B	
												LTJ	AppJ	1-SI-90-701	
												FSC	Q	1-SI-90-901-B 1-SI-90-902-B	
												STC	Q	1-SI-90-901-B 1-SI-90-902-B	
1-FCV-90-109	CNTMT BLDG LOWER COMPT AIR RAD MON SUPPLY	1-47W610-90-3 / C-8	A	ACT	2	1.5	GL	AO	O	C	C	RPI	2Y	1-SI-90-901-B 1-SI-90-902-B	
												LTJ	AppJ	1-SI-90-701	
												FSC	Q	1-SI-90-901-B 1-SI-90-902-B	
												STC	Q	1-SI-90-901-B 1-SI-90-902-B	
1-FCV-90-110	CNTMT BLDG LOWER COMPT AIR RAD MON RETURN	1-47W610-90-3 / C-8	A	ACT	2	1.5	GL	AO	O	C	C	RPI	2Y	1-SI-90-901-B 1-SI-90-902-B	
												LTJ	AppJ	1-SI-90-701	
												FSC	Q	1-SI-90-901-B 1-SI-90-902-B	
												STC	Q	1-SI-90-901-B 1-SI-90-902-B	
1-FCV-90-111	CNTMT BLDG LOWER COMPT AIR RAD MON RETURN	1-47W610-90-3 / D-9	A	ACT	2	1.5	GL	AO	O	C	C	RPI	2Y	1-SI-90-901-A 1-SI-90-902-A	
												LTJ	AppJ	1-SI-90-701	
												FSC	Q	1-SI-90-901-A 1-SI-90-902-A	
												STC	Q	1-SI-90-901-A 1-SI-90-902-A	

Appendix B - Valve Test Plan

VALVE ID	FUNCTION	DRAWING/COOR	CAT	ACT/ PASS	CLASS	SIZE	TYPE	ACT	POSITION			TEST REQ	FREQ	PROCEDURE	NOTES
									NORM	SAFE	FAIL				
1-FCV-90-113	CNTMT BLDG UPPER COMPT AIR RAD MON SUPPLY	1-47W610-90-3 / A-5	A	ACT	2	1.5	GL	AO	O	C	C	RPI	2Y	1-SI-90-901-A 1-SI-90-902-A	
												LTJ	AppJ	1-SI-90-701	
												FSC	Q	1-SI-90-901-A 1-SI-90-902-A	
												STC	Q	1-SI-90-901-A 1-SI-90-902-A	
1-FCV-90-114	CNTMT BLDG UPPER COMPT AIR RAD MON SUPPLY	1-47W610-90-3 / C-4	A	ACT	2	1.5	GL	AO	O	C	C	RPI	2Y	1-SI-90-901-B 1-SI-90-902-B	
												LTJ	AppJ	1-SI-90-701	
												FSC	Q	1-SI-90-901-B 1-SI-90-902-B	
												STC	Q	1-SI-90-901-B 1-SI-90-902-B	
1-FCV-90-115	CNTMT BLDG UPPER COMPT AIR RAD MON SUPPLY	1-47W610-90-3 / C-4	A	ACT	2	1.5	GL	AO	O	C	C	RPI	2Y	1-SI-90-901-B 1-SI-90-902-B	
												LTJ	AppJ	1-SI-90-701	
												FSC	Q	1-SI-90-901-B 1-SI-90-902-B	
												STC	Q	1-SI-90-901-B 1-SI-90-902-B	
1-FCV-90-116	CNTMT BLDG UPPER COMPT AIR RAD MON RETURN	1-47W610-90-3 / C-4	A	ACT	2	1.5	GL	AO	O	C	C	RPI	2Y	1-SI-90-901-B 1-SI-90-902-B	
												LTJ	AppJ	1-SI-90-701	
												FSC	Q	1-SI-90-901-B 1-SI-90-902-B	
												STC	Q	1-SI-90-901-B 1-SI-90-902-B	

Appendix B - Valve Test Plan

VALVE ID	FUNCTION	DRAWING/COOR	CAT	ACT/ PASS	CLASS	SIZE	TYPE	ACT	POSITION			TEST REQ	FREQ	PROCEDURE	NOTES
									NORM	SAFE	FAIL				
1-FCV-90-117	CNTMT BLDG UPPER COMPT AIR RAD MON RETURN	1-47W610-90-3 / D-5	A	ACT	2	1.5	GL	AO	O	C	C	RPI	2Y	1-SI-90-901-A 1-SI-90-902-A	
												LTJ	AppJ	1-SI-90-701	
												FSC	Q	1-SI-90-901-A 1-SI-90-902-A	
												STC	Q	1-SI-90-901-A 1-SI-90-902-A	

Appendix B - Valve Test Plan

VALVE ID	FUNCTION	DRAWING/COOR	CAT	ACT/ PASS	CLASS	SIZE	TYPE	ACT	POSITION			TEST REQ	FREQ	PROCEDURE	NOTES
									NORM	SAFE	FAIL				
2-FCV-1-4	MAIN STEAM ISOL VALVE LOOP 1	2-47W801-1 / C-3	B	ACT	2	32	GL	AO	O	C	C	RPI	2Y		
												FSC	RO		DTJ-01
												STC	RO		DTJ-01
2-PCV-1-5	MAIN STEAM LOOP 1 PORV	2-47W801-1 / C-2	B	ACT	2	6	GL	AO	C	O/C	C	RPI	2Y		
												FSC	RO		
												STC	RO		
												STO	RO		
2-FCV-1-7	STEAM GENERATOR 1 BLOWDOWN ISOL	2-47W801-2 / C-4	B	ACT	2	4	GL	SO	O	C	C	RPI	2Y		
												FSC	Q		
												STC	Q		
2-FCV-1-11	MAIN STEAM ISOL VALVE LOOP 2	2-47W801-1 / E-3	B	ACT	2	32	GL	AO	O	C	C	RPI	2Y		
												FSC	RO		DTJ-01
												STC	RO		DTJ-01
2-PCV-1-12	MAIN STEAM LOOP 2 PORV	2-47W801-1 / D-2	B	ACT	2	6	GL	AO	C	O/C	C	RPI	2Y		
												FSC	RO		
												STC	RO		
												STO	RO		
2-FCV-1-14	STEAM GENERATOR 2 BLOWDOWN ISOL	2-47W801-2 / E-4	B	ACT	2	4	GL	SO	O	C	C	RPI	2Y		
												FSC	Q		
												STC	Q		
2-FCV-1-15	MAIN STEAM LOOP 1 TD AUX FWP SUP	0-47W803-2 / C-2	B	ACT	2	4	GA	MO	O	O/C	FAI	RPI	2Y		
												STC	Q		
												STO	Q		

Appendix B - Valve Test Plan

VALVE ID	FUNCTION	DRAWING/COOR	CAT	ACT/ PASS	CLASS	SIZE	TYPE	ACT	POSITION			TEST REQ	FREQ	PROCEDURE	NOTES
									NORM	SAFE	FAIL				
2-FCV-1-16	MAIN STEAM LOOP 4 TD AUX FWP SUP	0-47W803-2 / A-2	B	ACT	2	4	GA	MO	C	O/C	FAI	RPI STC STO	2Y Q Q		
2-FCV-1-17	MAIN STEAM AUX FWP HDR SUPPLY ISOL	0-47W803-2 / B-4	B	ACT	3	4	GA	MO	O	O/C	FAI	RPI STC STO	2Y CSD CSD		 DTJ-02 DTJ-02
2-FCV-1-18	MAIN STEAM AUX FWP HDR SUPPLY ISOL	0-47W803-2 / B-4	B	ACT	2	4	GA	MO	O	O/C	FAI	RPI STC STO	2Y CSD CSD		 DTJ-02 DTJ-02
2-FCV-1-22	MAIN STEAM ISOL VLV LOOP 3	2-47W801-1 / F-3	B	ACT	2	32	GL	AO	O	C	C	RPI FSC STC	2Y RO RO		 DTJ-01 DTJ-01
2-PCV-1-23	MAIN STEAM LOOP 3 PORV	2-47W801-1 / F-2	B	ACT	2	6	GL	AO	C	O/C	C	RPI FSC STC STO	2Y RO RO RO		
2-FCV-1-25	STEAM GENERATOR 3 BLOWDOWN ISOL	2-47W801-2 / G-4	B	ACT	2	4	GL	SO	O	C	C	RPI FSC STC	2Y Q Q		

Appendix B - Valve Test Plan

VALVE ID	FUNCTION	DRAWING/COOR	CAT	ACT/ PASS	CLASS	SIZE	TYPE	ACT	POSITION			TEST REQ	FREQ	PROCEDURE	NOTES
									NORM	SAFE	FAIL				
2-FCV-1-29	MAIN STEAM ISOL VALVE LOOP 4	2-47W801-1 / A-3	B	ACT	2	32	GL	AO	O	C	C	RPI	2Y		
												FSC	RO		DTJ-01
												STC	RO		DTJ-01
2-PCV-1-30	MAIN STEAM LOOP 4 PORV	2-47W801-1 / A-2	B	ACT	2	6	GL	AO	C	O/C	C	RPI	2Y		
												FSC	RO		
												STC	RO		
												STO	RO		
2-FCV-1-32	STEAM GENERATOR 4 BLOWDOWN ISOL	2-47W801-2 / B-4	B	ACT	2	4	GL	SO	O	C	C	RPI	2Y		
												FSC	Q		
												STC	Q		
2-FCV-1-147	MAIN STEAM ISOL VLV LOOP 1 BYP WARMING VLV	2-47W801-1 / C-3	B	ACT	2	2	GL	AO	LC	C	C	RPI	2Y		
												FSC	CSD		DTJ-03
												STC	CSD		DTJ-03
2-FCV-1-148	MAIN STEAM ISOL VLV LOOP 2 BYP WARMING VLV	2-47W801-1 / E-3	B	ACT	2	2	GL	AO	LC	C	C	RPI	2Y		
												FSC	CSD		DTJ-03
												STC	CSD		DTJ-03
2-FCV-1-149	MAIN STEAM ISOL VLV LOOP 3 BYP WARMING VLV	2-47W801-1 / G-3	B	ACT	2	2	GL	AO	LC	C	C	RPI	2Y		
												FSC	CSD		DTJ-03
												STC	CSD		DTJ-03

Appendix B - Valve Test Plan

VALVE ID	FUNCTION	DRAWING/COOR	CAT	ACT/ PASS	CLASS	SIZE	TYPE	ACT	POSITION			TEST REQ	FREQ	PROCEDURE	NOTES
									NORM	SAFE	FAIL				
2-FCV-1-150	MAIN STEAM ISOL VLV LOOP 4 BYP WARMING VLV	2-47W801-1 / B-3	B	ACT	2	2	GL	AO	LC	C	C	RPI FSC STC	2Y CSD CSD		 DTJ-03 DTJ-03
2-FCV-1-181	STEAM GENERATOR 1 BLOWDOWN ISOL	2-47W801-2 / D-2	B	ACT	2	4	GL	SO	O	C	C	RPI FSC STC	2Y Q Q		
2-FCV-1-182	STEAM GENERATOR 2 BLOWDOWN ISOL	2-47W801-2 / F-2	B	ACT	2	4	GL	SO	O	C	C	RPI FSC STC	2Y Q Q		
2-FCV-1-183	STEAM GENERATOR 3 BLOWDOWN ISOL	2-47W801-2 / H-2	B	ACT	2	4	GL	SO	O	C	C	RPI FSC STC	2Y Q Q		
2-FCV-1-184	STEAM GENERATOR 4 BLOWDOWN ISOL	2-47W801-2 / B-2	B	ACT	2	4	GL	SO	O	C	C	RPI FSC STC	2Y Q Q		
2-SFV-1-512	MAIN STEAM LOOP 3 SAFETY VALVE	2-47W801-1 / F-2	C	ACT	2	6	RV	SA	C	O/C	N/A	RV	RV		
2-SFV-1-513	MAIN STEAM LOOP 3 SAFETY VALVE	2-47W801-1 / F-2	C	ACT	2	6	RV	SA	C	O/C	N/A	RV	RV		
2-SFV-1-514	MAIN STEAM LOOP 3 SAFETY VALVE	2-47W801-1 / F-2	C	ACT	2	6	RV	SA	C	O/C	N/A	RV	RV		
2-SFV-1-515	MAIN STEAM LOOP 3 SAFETY VALVE	2-47W801-1 / F-2	C	ACT	2	6	RV	SA	C	O/C	N/A	RV	RV		
2-SFV-1-516	MAIN STEAM LOOP 3 SAFETY VALVE	2-47W801-1 / F-2	C	ACT	2	6	RV	SA	C	O/C	N/A	RV	RV		

Appendix B - Valve Test Plan

VALVE ID	FUNCTION	DRAWING/COOR	CAT	ACT/ PASS	CLASS	SIZE	TYPE	ACT	POSITION			TEST REQ	FREQ	PROCEDURE	NOTES
									NORM	SAFE	FAIL				
2-SFV-1-517	MAIN STEAM LOOP 2 SAFETY VALVE	2-47W801-1 / D-2	C	ACT	2	6	RV	SA	C	O/C	N/A	RV	RV		
2-SFV-1-518	MAIN STEAM LOOP 2 SAFETY VALVE	2-47W801-1 / D-2	C	ACT	2	6	RV	SA	C	O/C	N/A	RV	RV		
2-SFV-1-519	MAIN STEAM LOOP 2 SAFETY VALVE	2-47W801-1 / D-2	C	ACT	2	6	RV	SA	C	O/C	N/A	RV	RV		
2-SFV-1-520	MAIN STEAM LOOP 2 SAFETY VALVE	2-47W801-1 / D-2	C	ACT	2	6	RV	SA	C	O/C	N/A	RV	RV		
2-SFV-1-521	MAIN STEAM LOOP 2 SAFETY VALVE	2-47W801-1 / D-2	C	ACT	2	6	RV	SA	C	O/C	N/A	RV	RV		
2-SFV-1-522	MAIN STEAM LOOP 1 SAFETY VALVE	2-47W801-1 / B-2	C	ACT	2	6	RV	SA	C	O/C	N/A	RV	RV		
2-SFV-1-523	MAIN STEAM LOOP 1 SAFETY VALVE	2-47W801-1 / B-2	C	ACT	2	6	RV	SA	C	O/C	N/A	RV	RV		
2-SFV-1-524	MAIN STEAM LOOP 1 SAFETY VALVE	2-47W801-1 / B-2	C	ACT	2	6	RV	SA	C	O/C	N/A	RV	RV		
2-SFV-1-525	MAIN STEAM LOOP 1 SAFETY VALVE	2-47W801-1 / B-2	C	ACT	2	6	RV	SA	C	O/C	N/A	RV	RV		
2-SFV-1-526	MAIN STEAM LOOP 1 SAFETY VALVE	2-47W801-1 / B-2	C	ACT	2	6	RV	SA	C	O/C	N/A	RV	RV		
2-SFV-1-527	MAIN STEAM LOOP 4 SAFETY VALVE	2-47W801-1 / A-2	C	ACT	2	6	RV	SA	C	O/C	N/A	RV	RV		
2-SFV-1-528	MAIN STEAM LOOP 4 SAFETY VALVE	2-47W801-1 / A-2	C	ACT	2	6	RV	SA	C	O/C	N/A	RV	RV		
2-SFV-1-529	MAIN STEAM LOOP 4 SAFETY VALVE	2-47W801-1 / A-2	C	ACT	2	6	RV	SA	C	O/C	N/A	RV	RV		
2-SFV-1-530	MAIN STEAM LOOP 4 SAFETY VALVE	2-47W801-1 / A-2	C	ACT	2	6	RV	SA	C	O/C	N/A	RV	RV		
2-SFV-1-531	MAIN STEAM LOOP 4 SAFETY VALVE	2-47W801-1 / A-2	C	ACT	2	6	RV	SA	C	O/C	N/A	RV	RV		
2-ISV-1-619	MAIN STEAM LOOP 1 PORV ISOLATION	2-47W801-1 / C-2	B	ACT	2	6	GA	M	O	O/C	N/A	MS	2Y		
2-ISV-1-620	MAIN STEAM LOOP 2 PORV ISOLATION	2-47W801-1 / D-2	B	ACT	2	6	GA	M	O	O/C	N/A	MS	2Y		
2-ISV-1-621	MAIN STEAM LOOP 3 PORV ISOLATION	2-47W801-1 / F-2	B	ACT	2	6	GA	M	O	O/C	N/A	MS	2Y		
2-ISV-1-622	MAIN STEAM LOOP 4 PORV ISOLATION	2-47W801-1 / A-2	B	ACT	2	6	GA	M	O	O/C	N/A	MS	2Y		
2-CKV-1-891	MS SUPPLY FW TURB CHECK	0-47W803-2 / C-3	C	ACT	2	4	CK	SA	C	O/C	N/A	CM	CM		

Appendix B - Valve Test Plan

VALVE ID	FUNCTION	DRAWING/COOR	CAT	ACT/ PASS	CLASS	SIZE	TYPE	ACT	POSITION			TEST REQ	FREQ	PROCEDURE	NOTES
									NORM	SAFE	FAIL				
2-CKV-1-892	MS SUPPLY FW TURB CHECK	0-47W803-2 / A-3	C	ACT	2	4	CK	SA	C	O/C	N/A	CM	CM		
2-FCV-3-33	STEAM GENERATOR 1 MFW ISOL	2-47W803-1 / C-3	B	ACT	2	16	GA	MO	O	C	FAI	RPI	2Y		
												STC	RO		DTJ-06
2-FCV-3-35	STEAM GENERATOR 1 MFW REG VALVE	2-47W803-1 / C-4	B	ACT	3	16	ANG	AO	O	C	C	RPI	2Y		
												FSC	RO		DTJ-06
												STC	RO		DTJ-06
2-FCV-3-47	STEAM GENERATOR 2 MFW ISOL	2-47W803-1 / E-3	B	ACT	2	16	GA	MO	O	C	FAI	RPI	2Y		
												STC	RO		DTJ-06
2-FCV-3-48	STEAM GENERATOR 2 MFW REG VALVE	2-47W803-1 / E-4	B	ACT	3	16	ANG	AO	O	C	C	RPI	2Y		
												FSC	RO		DTJ-06
												STC	RO		DTJ-06
2-FCV-3-87	STEAM GENERATOR 3 MFW ISOL	2-47W803-1 / F-3	B	ACT	2	16	GA	MO	O	C	FAI	RPI	2Y		
												STC	RO		DTJ-06
2-FCV-3-90	STEAM GENERATOR 3 MFW REG VALVE	2-47W803-1 / F-4	B	ACT	3	16	ANG	AO	O	C	C	RPI	2Y		
												FSC	RO		DTJ-06
												STC	RO		DTJ-06
2-FCV-3-100	STEAM GENERATOR 4 MFW ISOL	2-47W803-1 / B-3	B	ACT	2	16	GA	MO	O	C	FAI	RPI	2Y		
												STC	RO		DTJ-06
2-FCV-3-103	STEAM GENERATOR 4 MFW REG VALVE	2-47W803-1 / B-4	B	ACT	3	16	ANG	AO	O	C	C	RPI	2Y		
												FSC	RO		DTJ-06
												STC	RO		DTJ-06

Appendix B - Valve Test Plan

VALVE ID	FUNCTION	DRAWING/COOR	CAT	ACT/ PASS	CLASS	SIZE	TYPE	ACT	POSITION			TEST REQ	FREQ	PROCEDURE	NOTES
									NORM	SAFE	FAIL				
2-FCV-3-116A	ERCW HEADER A AFW PUMP 2A-A SUCTION	0-47W803-2 / E-6	B	ACT	3	4	GA	MO	C	O	FAI	RPI STO	2Y Q		
2-FCV-3-116B	ERCW HEADER A AFW PUMP 2A-A SUCTION	0-47W803-2 / E-6	B	ACT	3	4	GA	MO	C	O	FAI	RPI STO	2Y Q		
2-PCV-3-122	AUX FEEDWATER PMP 2A-A DISCHARGE PRESS CONTROL	0-47W803-2 / D-5	B	ACT	3	4	GL	AO	C	O	C	FSC STO	Q Q		
2-FCV-3-126A	ERCW HEADER B AFW PUMP 2B-B SUCTION	0-47W803-2 / E-7	B	ACT	3	4	GA	MO	C	O	FAI	RPI STO	2Y Q		
2-FCV-3-126B	ERCW HEADER B AFW PUMP 2B-B SUCTION	0-47W803-2 / E-7	B	ACT	3	4	GA	MO	C	O	FAI	RPI STO	2Y Q		
2-PCV-3-132	AUX FEEDWATER PMP 2B-B DISCHARGE PRESS CONTROL	0-47W803-2 / D-6	B	ACT	3	4	GL	AO	PO	PO	C	FSC PSO STO	Q Q Q		
2-FCV-3-136A	ERCW HEADER A TD AFW PMP SUCT	0-47W803-2 / C-4	B	ACT	3	6	GA	MO	C	O	FAI	RPI STO	2Y Q		
2-FCV-3-136B	ERCW HEADER A TD AFW PMP SUCT	0-47W803-2 / C-4	B	ACT	3	6	GA	MO	C	O	FAI	RPI STO	2Y Q		

Appendix B - Valve Test Plan

VALVE ID	FUNCTION	DRAWING/COOR	CAT	ACT/ PASS	CLASS	SIZE	TYPE	ACT	POSITION			TEST REQ	FREQ	PROCEDURE	NOTES
									NORM	SAFE	FAIL				
2-LCV-3-148A	SG 3 AUX FEEDWATER 2-LCV-3-148 BYPASS	0-47W803-2 / G-3	B	ACT	3	2	ANG	AO	C	O/C	C	RPI	2Y		
												FSC	Q		
												STC	Q		
												STO	Q		
2-LCV-3-148	MD AFW PUMP 2B-B SG 3 LEVEL CONTROL	0-47W803-2 / G-3	B	ACT	3	4	GL	AO	C	O/C	O	RPI	2Y		
												FSO	Q		
												STC	Q		
												STO	Q		
2-LCV-3-156	MD AFW PUMP 2A-A SG 2 LEVEL CONTROL	0-47W803-2 / E-3	B	ACT	3	4	GL	AO	C	O/C	O	RPI	2Y		
												FSO	Q		
												STC	Q		
												STO	Q		
2-LCV-3-156A	SG 2 AUX FEEDWATER 2-LCV-3-156 BYPASS	0-47W803-2 / E-3	B	ACT	3	2	ANG	AO	C	O/C	C	RPI	2Y		
												FSC	Q		
												STC	Q		
												STO	Q		
2-LCV-3-164	MD AFW PUMP 2A-A SG 1 LEVEL CONTROL	0-47W803-2 / C-3	B	ACT	3	4	GL	AO	C	O/C	O	RPI	2Y		
												FSO	Q		
												STC	Q		
												STO	Q		

Appendix B - Valve Test Plan

VALVE ID	FUNCTION	DRAWING/COOR	CAT	ACT/ PASS	CLASS	SIZE	TYPE	ACT	POSITION			TEST REQ	FREQ	PROCEDURE	NOTES
									NORM	SAFE	FAIL				
2-LCV-3-164A	SG 3 AUX FEEDWATER 1-LCV-3-148 BYPASS	0-47W803-2 / D-3	B	ACT	3	2	ANG	AO	C	O/C	C	RPI	2Y		
												FSC	Q		
												STC	Q		
												STO	Q		
2-LCV-3-171A	SG 3 AUX FEEDWATER 2-LCV-3-148 BYPASS	0-47W803-2 / B-3	B	ACT	3	2	ANG	AO	C	O/C	C	RPI	2Y		
												FSC	Q		
												STC	Q		
												STO	Q		
2-LCV-3-171	MD AFW PUMP 2B-B SG 4 LEVEL CONTROL	0-47W803-2 / B-3	B	ACT	3	4	GL	AO	C	O/C	O	RPI	2Y		
												FSO	Q		
												STC	Q		
												STO	Q		
2-LCV-3-172	TD AFW PUMP SG 3 LEVEL CONTROL	0-47W803-2 / G-3	B	ACT	3	3	GL	AO	C	O/C	C	RPI	2Y		
												FSC	Q		
												STC	Q		
												STO	Q		
2-LCV-3-173	TD AFW PUMP SG 3 LEVEL CONTROL	0-47W803-2 / E-3	B	ACT	3	3	GL	AO	C	O/C	C	RPI	2Y		
												FSC	Q		
												STC	Q		
												STO	Q		

Appendix B - Valve Test Plan

VALVE ID	FUNCTION	DRAWING/COOR	CAT	ACT/ PASS	CLASS	SIZE	TYPE	ACT	POSITION			TEST REQ	FREQ	PROCEDURE	NOTES
									NORM	SAFE	FAIL				
2-LCV-3-174	TD AFW PUMP SG 3 LEVEL CONTROL	0-47W803-2 / C-3	B	ACT	3	3	GL	AO	C	O/C	C	RPI	2Y		
												FSC	Q		
												STC	Q		
												STO	Q		
2-LCV-3-175	TD AFW PUMP SG 3 LEVEL CONTROL	0-47W803-2 / A-3	B	ACT	3	3	GL	AO	C	O/C	C	RPI	2Y		
												FSC	Q		
												STC	Q		
												STO	Q		
2-FCV-3-179A	ERCW HEADER B TD AFW PMP SUCT	0-47W803-2 / C-4	B	ACT	3	6	GA	MO	C	O	FAI	RPI	2Y		
												STO	Q		
2-FCV-3-179B	ERCW HEADER B TD AFW PMP SUCT	0-47W803-2 / C-4	B	ACT	3	6	GA	MO	C	O	FAI	RPI	2Y		
												STO	Q		
2-FCV-3-185	STEAM GENERATOR 1 MFW BACKFLUSH WARMING	2-47W803-1 / C-2	B	ACT	2	2	GL	AO	O	C	C	RPI	2Y		
												FSC	RO		DTJ-06
												STC	RO		DTJ-06
2-FCV-3-186	STEAM GENERATOR 2 MFW BACKFLUSH WARMING	2-47W803-1 / E-2	B	ACT	2	2	GL	AO	O	C	C	RPI	2Y		
												FSC	RO		DTJ-06
												STC	RO		DTJ-06

Appendix B - Valve Test Plan

VALVE ID	FUNCTION	DRAWING/COOR	CAT	ACT/ PASS	CLASS	SIZE	TYPE	ACT	POSITION			TEST REQ	FREQ	PROCEDURE	NOTES
									NORM	SAFE	FAIL				
2-FCV-3-187	STEAM GENERATOR 3 MFW BACKFLUSH WARMING	2-47W803-1 / G-2	B	ACT	2	2	GL	AO	O	C	C	RPI	2Y		
												FSC	RO		DTJ-06
												STC	RO		DTJ-06
2-FCV-3-188	STEAM GENERATOR 4 MFW BACKFLUSH WARMING	2-47W803-1 / B-2	B	ACT	2	2	GL	AO	O	C	C	RPI	2Y		
												FSC	RO		DTJ-06
												STC	RO		DTJ-06
2-FCV-3-236	STEAM GENERATOR 1 MFW BYPASS LINE ISOL	2-47W803-1 / C-3	B	ACT	2	6	GL	AO	O	C	C	RPI	2Y		
												FSC	RO		DTJ-06
												STC	RO		DTJ-06
2-FCV-3-239	STEAM GENERATOR 2 MFW BYPASS LINE ISOL	2-47W803-1 / D-3	B	ACT	2	6	GL	AO	O	C	C	RPI	2Y		
												FSC	RO		DTJ-06
												STC	RO		DTJ-06
2-FCV-3-242	STEAM GENERATOR 3 MFW BYPASS LINE ISOL	2-47W803-1 / F-3	B	ACT	2	6	GL	AO	O	C	C	RPI	2Y		
												FSC	RO		DTJ-06
												STC	RO		DTJ-06

Appendix B - Valve Test Plan

VALVE ID	FUNCTION	DRAWING/COOR	CAT	ACT/ PASS	CLASS	SIZE	TYPE	ACT	POSITION			TEST REQ	FREQ	PROCEDURE	NOTES
									NORM	SAFE	FAIL				
2-FCV-3-245	STEAM GENERATOR 4 MFW BYPASS LINE ISOL	2-47W803-1 / A-3	B	ACT	2	6	GL	AO	O	C	C	RPI FSC STC	2Y RO RO		 DTJ-06 DTJ-06
2-FCV-3-355	AUX FEEDWATER PMP 2A-A RECIRC FLOW	0-47W803-2 / E-4	B	ACT	3	2	GL	AO	C	C	C	RPI FSC STC	2Y Q Q		
2-FCV-3-359	AUX FEEDWATER PMP 2B-B RECIRC FLOW	0-47W803-2 / E-7	B	ACT	3	2	GL	AO	C	C	C	RPI FSC STC	2Y Q Q		
2-CKV-3-508	STEAM GENERATOR 3 MFW CHECK	2-47W803-1 / F-2	C	ACT	2	16	CK	SA	O	C	N/A	BDO CVC	CSD CSD		DTJ-05 DTJ-05
2-CKV-3-509	STEAM GENERATOR 2 MFW CHECK	2-47W803-1 / E-2	C	ACT	2	16	CK	SA	O	C	N/A	BDO CVC	CSD CSD		DTJ-05 DTJ-05
2-CKV-3-510	STEAM GENERATOR 1 MFW CHECK	2-47W803-1 / C-2	C	ACT	2	16	CK	SA	O	C	N/A	BDO CVC	CSD CSD		DTJ-05 DTJ-05
2-CKV-3-511	STEAM GENERATOR 4 MFW CHECK	2-47W803-1 / B-2	C	ACT	2	16	CK	SA	O	C	N/A	BDO CVC	CSD CSD		DTJ-05 DTJ-05
2-CKV-3-638	STEAM GENERATOR 4 MFW BYPASS LINE CHECK	2-47W803-1 / A-3	C	ACT	2	6	CK	SA	O	C	N/A	CM	CM		
2-CKV-3-644	STEAM GENERATOR 4 MFW BYPASS LINE CHECK	2-47W803-1 / A-1	C	ACT	2	6	CK	SA	O	O/C	N/A	CM	CM		
2-CKV-3-645	STEAM GENERATOR 4 MFW BYPASS LINE CHECK	2-47W803-1 / A-1	C	ACT	2	6	CK	SA	O	O/C	N/A	CM	CM		

Appendix B - Valve Test Plan

VALVE ID	FUNCTION	DRAWING/COOR	CAT	ACT/ PASS	CLASS	SIZE	TYPE	ACT	POSITION			TEST REQ	FREQ	PROCEDURE	NOTES
									NORM	SAFE	FAIL				
2-CKV-3-652	STEAM GENERATOR 1 MFW BYPASS LINE CHECK	2-47W803-1 / C-2	C	ACT	2	6	CK	SA	O	C	N/A	CM	CM		
2-CKV-3-655	STEAM GENERATOR 1 MFW BYPASS LINE CHECK	2-47W803-1 / C-1	C	ACT	2	6	CK	SA	O	O/C	N/A	CM	CM		
2-CKV-3-656	STEAM GENERATOR 1 MFW BYPASS LINE CHECK	2-47W803-1 / C-1	C	ACT	2	6	CK	SA	O	O/C	N/A	CM	CM		
2-CKV-3-669	STEAM GENERATOR 2 MFW BYPASS LINE CHECK	2-47W803-1 / D-2	C	ACT	2	6	CK	SA	O	C	N/A	CM	CM		
2-CKV-3-670	STEAM GENERATOR 2 MFW BYPASS LINE CHECK	2-47W803-1 / E-1	C	ACT	2	6	CK	SA	O	O/C	N/A	CM	CM		
2-CKV-3-678	STEAM GENERATOR 3 MFW BYPASS LINE CHECK	2-47W803-1 / E-2	C	ACT	2	6	CK	SA	O	C	N/A	CM	CM		
2-CKV-3-679	STEAM GENERATOR 3 MFW BYPASS LINE CHECK	2-47W803-1 / F-1	C	ACT	2	6	CK	SA	O	O/C	N/A	CM	CM		
2-CKV-3-805	AUX FEEDWATER PMP 2A-A SUCTION CHECK	0-47W803-2 / D-5	C	ACT	3	8	CK	SA	C	O/C	N/A	CVC CVO	RO RO		DTJ-07 DTJ-07
2-CKV-3-806	AUX FEEDWATER PMP 2B-B SUCTION CHECK	0-47W803-2 / D-7	C	ACT	3	8	CK	SA	C	O/C	N/A	CVC CVO	RO RO		DTJ-07 DTJ-07
2-CKV-3-810	TD AUX FEEDWATER PUMP SUCTION CHECK	0-47W803-2 / C-4	C	ACT	3	10	CK	SA	C	O/C	N/A	CVC CVO	RO RO		DTJ-07 DTJ-07
2-CKV-3-814	AUX FEEDWATER PMP 2A-A RECIRC CHECK	0-47W803-2 / E-5	C	ACT	3	1.5	CK	SA	C	O	N/A	BDC CVO	Q Q		

Appendix B - Valve Test Plan

VALVE ID	FUNCTION	DRAWING/COOR	CAT	ACT/ PASS	CLASS	SIZE	TYPE	ACT	POSITION			TEST REQ	FREQ	PROCEDURE	NOTES
									NORM	SAFE	FAIL				
2-CKV-3-815	AUX FEEDWATER PMP 2B-B RECIRC CHECK	0-47W803-2 / E-6	C	ACT	3	1.5	CK	SA	C	O	N/A	BDC CVO	Q Q		
2-CKV-3-818	TD AUX FEEDWATER PUMP RECIRC CHECK	0-47W803-2 / B-6	C	ACT	3	1.5	CK	SA	C	O	N/A	BDC CVO	Q Q		
2-CKV-3-830	AUX FEEDWATER PMP 2B-B SG 3 SUPPLY CHECK	0-47W803-2 / G-2	C	ACT	2	4	CK	SA	C	O/C	N/A	CM	CM		
2-CKV-3-831	AUX FEEDWATER PMP 2A-A SG 2 SUPPLY CHECK	0-47W803-2 / E-2	C	ACT	2	4	CK	SA	C	O/C	N/A	CM	CM		
2-CKV-3-832	AUX FEEDWATER PMP 2A-A SG 1 SUPPLY CHECK	0-47W803-2 / C-2	C	ACT	2	4	CK	SA	C	O/C	N/A	CM	CM		
2-CKV-3-833	AUX FEEDWATER PMP 2B-B SG 4 SUPPLY CHECK	0-47W803-2 / B-2	C	ACT	2	4	CK	SA	C	O/C	N/A	CM	CM		
2-CKV-3-861	AUX FEEDWATER PMP 2B-B SG 3 SUPPLY CHECK	0-47W803-2 / G-1	C	ACT	2	4	CK	SA	C	O/C	N/A	CM	CM		
2-CKV-3-862	AUX FEEDWATER PMP 2A-A SG 2 SUPPLY CHECK	0-47W803-2 / E-1	C	ACT	2	4	CK	SA	C	O/C	N/A	CM	CM		
2-CKV-3-864	TD AUX FEEDWATER PUMP DISCHARGE CHECK	0-47W803-2 / C-6	C	ACT	3	6	CK	SA	C	O/C	N/A	CVC CVO	RO RO		DTJ-07 DTJ-07
2-CKV-3-871	TD AUX FEEDWATER PUMP SG 3 SUPPLY CHECK	0-47W803-2 / G-2	C	ACT	2	4	CK	SA	C	O/C	N/A	CM	CM		
2-CKV-3-872	TD AUX FEEDWATER PUMP SG 2 SUPPLY CHECK	0-47W803-2 / E-2	C	ACT	2	4	CK	SA	C	O/C	N/A	CM	CM		
2-CKV-3-873	TD AUX FEEDWATER PUMP SG 1 SUPPLY CHECK	0-47W803-2 / C-2	C	ACT	2	4	CK	SA	C	O/C	N/A	CM	CM		

Appendix B - Valve Test Plan

VALVE ID	FUNCTION	DRAWING/COOR	CAT	ACT/ PASS	CLASS	SIZE	TYPE	ACT	POSITION			TEST REQ	FREQ	PROCEDURE	NOTES
									NORM	SAFE	FAIL				
2-CKV-3-874	TD AUX FEEDWATER PUMP SG 4 SUPPLY CHECK	0-47W803-2 / A-2	C	ACT	2	4	CK	SA	C	O/C	N/A	CM	CM		
2-CKV-3-921	AUX FEEDWATER PMP 2B-B SG 3 SUPPLY CHECK	0-47W803-2 / G-1	C	ACT	2	4	CK	SA	C	O/C	N/A	CM	CM		
2-CKV-3-922	AUX FEEDWATER PMP 2A-A SG 2 SUPPLY CHECK	0-47W803-2 / F-1	C	ACT	2	4	CK	SA	C	O/C	N/A	CM	CM		
2-FCV-26-240	REACTOR BLDG STANDPIPE ISOL	2-47W850-9 / B-9	A	ACT	2	4	GA	MO	O	C	FAI	RPI LTJ STC	2Y AppJ Q		
2-FCV-26-243	REACTOR COOLANT PUMP SPRINKLER HDR ISOL	2-47W850-9 / C-3	A	ACT	2	4	GA	MO	O	C	FAI	RPI LTJ STC	2Y AppJ Q		
2-CKV-26-1260	REACTOR BLDG HPFP SUPPLY HDR CHECK	2-47W850-9 / B-10	A/C	ACT	2	4	CK	SA	C	C	N/A	LTJ CM	AppJ CM		
2-CKV-26-1296	REACTOR COOLANT PUMP SPRINKLER HDR ISOL CHK	2-47W850-9 / C-4	A/C	ACT	2	4	CK	SA	C	C	N/A	LTJ CM	AppJ CM		
2-FCV-30-7	CNTMT UPPER COMPARTMENT PURGE SUPPLY	2-47W866-1 / C-1	A	ACT	2	24	BF	AO	O/C	C	C	RPI LTJ FSC STC	2Y AppJ Q Q		

Appendix B - Valve Test Plan

VALVE ID	FUNCTION	DRAWING/COOR	CAT	ACT/ PASS	CLASS	SIZE	TYPE	ACT	POSITION			TEST REQ	FREQ	PROCEDURE	NOTES
									NORM	SAFE	FAIL				
2-FCV-30-8	CNTMT UPPER COMPARTMENT PURGE SUPPLY	2-47W866-1 / C-2	A	ACT	2	24	BF	AO	O/C	C	C	RPI LTJ FSC STC	2Y AppJ Q Q		
2-FCV-30-9	CNTMT UPPER COMPARTMENT PURGE SUPPLY	2-47W866-1 / C-1	A	ACT	2	24	BF	AO	O/C	C	C	RPI LTJ FSC STC	2Y AppJ Q Q		
2-FCV-30-10	CNTMT UPPER COMPARTMENT PURGE SUPPLY	2-47W866-1 / C-2	A	ACT	2	24	BF	AO	O/C	C	C	RPI LTJ FSC STC	2Y AppJ Q Q		
2-FCV-30-14	CNTMT LOWER COMPARTMENT PURGE SUPPLY	2-47W866-1 / E-1	A	ACT	2	24	BF	AO	O/C	C	C	RPI LTJ FSC STC	2Y AppJ Q Q		
2-FCV-30-15	CNTMT LOWER COMPARTMENT PURGE SUPPLY	2-47W866-1 / E-2	A	ACT	2	24	BF	AO	O/C	C	C	RPI LTJ FSC STC	2Y AppJ Q Q		

Appendix B - Valve Test Plan

VALVE ID	FUNCTION	DRAWING/COOR	CAT	ACT/ PASS	CLASS	SIZE	TYPE	ACT	POSITION			TEST REQ	FREQ	PROCEDURE	NOTES
									NORM	SAFE	FAIL				
2-FCV-30-16	CNTMT LOWER COMPARTMENT PURGE SUPPLY	2-47W866-1 / E-1	A	ACT	2	24	BF	AO	O/C	C	C	RPI LTJ FSC STC	2Y AppJ Q Q		
2-FCV-30-17	CNTMT LOWER COMPARTMENT PURGE SUPPLY	2-47W866-1 / E-2	A	ACT	2	24	BF	AO	O/C	C	C	RPI LTJ FSC STC	2Y AppJ Q Q		
2-FCV-30-19	CNTMT INCORE INSTR ROOM PURGE SUPPLY	2-47W866-1 / G-1	A	ACT	2	12	BF	AO	O/C	C	C	RPI LTJ FSC STC	2Y AppJ Q Q		
2-FCV-30-20	CNTMT INCORE INSTR ROOM PURGE SUPPLY	2-47W866-1 / G-2	A	ACT	2	12	BF	AO	O/C	C	C	RPI LTJ FSC STC	2Y AppJ Q Q		
2-FCV-30-37	CNTMT LOWER COMPARTMENT PURGE EXH PRESS RELIEF	2-47W866-1 / D-10	A	ACT	2	8	BF	AO	O	C	C	RPI LTJ FSC STC	2Y AppJ Q Q		

Appendix B - Valve Test Plan

VALVE ID	FUNCTION	DRAWING/COOR	CAT	ACT/ PASS	CLASS	SIZE	TYPE	ACT	POSITION			TEST REQ	FREQ	PROCEDURE	NOTES
									NORM	SAFE	FAIL				
2-FCV-30-40	CNTMT LOWER COMPARTMENT PURGE EXH PRESS RELIEF	2-47W866-1 / D-9	A	ACT	2	8	BF	AO	O	C	C	RPI LTJ FSC STC	2Y AppJ Q Q		
2-FCV-30-50	CNTMT UPPER COMPARTMENT EXHAUST ISOLATION	2-47W866-1 / C-9	A	ACT	2	24	BF	AO	O/C	C	C	RPI LTJ FSC STC	2Y AppJ Q Q		
2-FCV-30-51	CNTMT UPPER COMPARTMENT EXHAUST ISOLATION	2-47W866-1 / C-10	A	ACT	2	24	BF	AO	O/C	C	C	RPI LTJ FSC STC	2Y AppJ Q Q		
2-FCV-30-52	CNTMT UPPER COMPARTMENT EXHAUST ISOLATION	2-47W866-1 / C-9	A	ACT	2	24	BF	AO	O/C	C	C	RPI LTJ FSC STC	2Y AppJ Q Q		

Appendix B - Valve Test Plan

VALVE ID	FUNCTION	DRAWING/COOR	CAT	ACT/ PASS	CLASS	SIZE	TYPE	ACT	POSITION			TEST REQ	FREQ	PROCEDURE	NOTES
									NORM	SAFE	FAIL				
2-FCV-30-53	CNTMT UPPER COMPARTMENT EXHAUST ISOLATION	2-47W866-1 / C-10	A	ACT	2	24	BF	AO	O/C	C	C	RPI LTJ FSC STC	2Y AppJ Q Q		
2-FCV-30-56	CNTMT LOWER COMPARTMENT EXHAUST ISOLATION	2-47W866-1 / E-9	A	ACT	2	24	BF	AO	O/C	C	C	RPI LTJ FSC STC	2Y AppJ Q Q		
2-FCV-30-57	CNTMT LOWER COMPARTMENT EXHAUST ISOLATION	2-47W866-1 / E-10	A	ACT	2	24	BF	AO	O/C	C	C	RPI LTJ FSC STC	2Y AppJ Q Q		
2-FCV-30-58	CNTMT INSTRUMENT ROOM EXHAUST ISOLATION	2-47W866-1 / G-9	A	ACT	2	12	BF	AO	O/C	C	C	RPI LTJ FSC STC	2Y AppJ Q Q		

Appendix B - Valve Test Plan

VALVE ID	FUNCTION	DRAWING/COOR	CAT	ACT/ PASS	CLASS	SIZE	TYPE	ACT	POSITION			TEST REQ	FREQ	PROCEDURE	NOTES
									NORM	SAFE	FAIL				
2-FCV-30-59	CNTMT INSTRUMENT ROOM EXHAUST ISOLATION	2-47W866-1 / G-10	A	ACT	2	12	BF	AO	O/C	C	C	RPI LTJ FSC STC	2Y AppJ Q Q		
2-TV-30-554	CNTMT PURGE AIR EXHAUST TEST CONNECTION	2-47W866-1 / G-9	A	PASS	2	0.75	GA	M	LC	C	N/A	LTJ	AppJ		
2-TV-30-555	CNTMT PURGE AIR EXHAUST TEST CONNECTION	2-47W866-1 / E-9	A	PASS	2	0.75	GA	M	LC	C	N/A	LTJ	AppJ		
2-TV-30-556	CNTMT PURGE AIR EXHAUST TEST CONNECTION	2-47W866-1 / D-9	A	PASS	2	0.75	GA	M	LC	C	N/A	LTJ	AppJ		
2-TV-30-557	CNTMT PURGE AIR EXHAUST TEST CONNECTION	2-47W866-1 / C-9	A	PASS	2	0.75	GA	M	LC	C	N/A	LTJ	AppJ		
2-TV-30-558	CNTMT PURGE AIR EXHAUST TEST CONNECTION	2-47W866-1 / C-9	A	PASS	2	0.75	GA	M	LC	C	N/A	LTJ	AppJ		
2-TV-30-559	CNTMT PURGE AIR SUPPLY TEST CONNECTION	2-47W866-1 / G-2	A	PASS	2	0.75	GA	M	LC	C	N/A	LTJ	AppJ		
2-TV-30-560	CNTMT PURGE AIR SUPPLY TEST CONNECTION	2-47W866-1 / E-2	A	PASS	2	0.75	GA	M	LC	C	N/A	LTJ	AppJ		
2-TV-30-561	CNTMT PURGE AIR SUPPLY TEST CONNECTION	2-47W866-1 / E-2	A	PASS	2	0.75	GA	M	LC	C	N/A	LTJ	AppJ		
2-TV-30-562	CNTMT PURGE AIR SUPPLY TEST CONNECTION	2-47W866-1 / C-2	A	PASS	2	0.75	GA	M	LC	C	N/A	LTJ	AppJ		
2-TV-30-563	CNTMT PURGE AIR SUPPLY TEST CONNECTION	2-47W866-1 / C-2	A	PASS	2	0.75	GA	M	LC	C	N/A	LTJ	AppJ		

Appendix B - Valve Test Plan

VALVE ID	FUNCTION	DRAWING/COOR	CAT	ACT/ PASS	CLASS	SIZE	TYPE	ACT	POSITION			TEST REQ	FREQ	PROCEDURE	NOTES
									NORM	SAFE	FAIL				
2-FCV-31-305	INCORE INSTR RM AHU 2A CWR ISOL	2-47W865-5 / B-6	A	ACT	2	2	GL	AO	O	C	C	RPI LTJ FSC STC	2Y AppJ Q Q		
2-FCV-31-306	INCORE INSTR RM AHU 2A CWR ISOL	2-47W865-5 / B-7	A	ACT	2	2	GL	AO	O	C	C	RPI LTJ FSC STC	2Y AppJ Q Q		
2-FCV-31-308	INCORE INSTR RM AHU 2A CWS ISOL	2-47W865-5 / C-7	A	ACT	2	2	GL	AO	O	C	C	RPI LTJ FSC STC	2Y AppJ Q Q		
2-FCV-31-309	INCORE INSTR RM AHU 2A CWS ISOL	2-47W865-5 / C-6	A	ACT	2	4	GL	AO	O	C	C	RPI LTJ FSC STC	2Y AppJ Q Q		
2-FCV-31-326	INCORE INSTR RM AHU 2B CWR ISOL	2-47W865-5 / E-6	A	ACT	2	2	GL	AO	O	C	C	RPI LTJ FSC STC	2Y AppJ Q Q		

Appendix B - Valve Test Plan

VALVE ID	FUNCTION	DRAWING/COOR	CAT	ACT/ PASS	CLASS	SIZE	TYPE	ACT	POSITION			TEST REQ	FREQ	PROCEDURE	NOTES
									NORM	SAFE	FAIL				
2-FCV-31-327	INCORE INSTR RM AHU 2B CWR ISOL	2-47W865-5 / E-7	A	ACT	2	2	GL	AO	O	C	C	RPI LTJ FSC STC	2Y AppJ Q Q		
2-FCV-31-329	INCORE INSTR RM AHU 2B CWS ISOL	2-47W865-5 / F-7	A	ACT	2	2	GL	AO	O	C	C	RPI LTJ FSC STC	2Y AppJ Q Q		
2-FCV-31-330	INCORE INSTR RM AHU 2B CWS ISOL	2-47W865-5 / F-6	A	ACT	2	2	GL	AO	O	C	C	RPI LTJ FSC STC	2Y AppJ Q Q		
2-CKV-31-3378	INCORE INSTR RM AHU 2B CWS LEAK RATE CHECK	2-47W865-5 / F-7	A/C	ACT	2	0.5	CK	SA	C	O/C	N/A	LTJ CM	AppJ CM		
2-CKV-31-3392	INCORE INSTR RM AHU 2B CWR LEAK RATE CHECK	2-47W865-5 / E-7	A/C	ACT	2	0.5	CK	SA	C	O/C	N/A	LTJ CM	AppJ CM		
2-CKV-31-3407	INCORE INSTR RM AHU 2A CWS LEAK RATE CHECK	2-47W865-5 / D-7	A/C	ACT	2	0.5	CK	SA	C	O/C	N/A	LTJ CM	AppJ CM		

Appendix B - Valve Test Plan

VALVE ID	FUNCTION	DRAWING/COOR	CAT	ACT/ PASS	CLASS	SIZE	TYPE	ACT	POSITION			TEST REQ	FREQ	PROCEDURE	NOTES
									NORM	SAFE	FAIL				
2-CKV-31-3421	INCORE INSTR RM AHU 2A CWR LEAK RATE CHECK	2-47W865-5 / B-7	A/C	ACT	2	0.5	CK	SA	C	O/C	N/A	LTJ CM	AppJ CM		
2-FCV-32-81	ESSENT CONTROL AIR TR A CNTMT ISOL	0-47W848-1 / G-9	A	ACT	2	2	GL	AO	O	C	C	RPI LTJ FSC STC	2Y AppJ CSD CSD		 DTJ-09 DTJ-09
2-FCV-32-103	ESSENT CONTROL AIR TR B CNTMT ISOL	0-47W848-1 / E-9	A	ACT	2	2	GL	AO	O	C	C	RPI LTJ FSC STC	2Y AppJ CSD CSD		 DTJ-09 DTJ-09
2-FCV-32-111	CONTROL AIR CNTMT ISOL	0-47W848-1 / H-9	A	ACT	2	2	GL	AO	O	C	C	RPI LTJ FSC STC	2Y AppJ CSD CSD		 DTJ-09 DTJ-09
2-BYV-32-318	ESSENT CONTROL AIR 2-FCV-32-103 BYPASS	0-47W848-1 / F-9	A	PASS	2	2	GL	M	LC	C	N/A	LTJ	AppJ		
2-CKV-32-323	ESSENT CNTL AIR CNTMT CHECK	0-47W848-1 / E-10	A/C	ACT	2	2	CK	SA	O	C	N/A	LTJ CM	AppJ CM	2-SI-32-701 2-SI-32-701	
2-BYV-32-328	ESSENT CONTROL AIR 2-FCV-32-81 BYPASS	0-47W848-1 / G-9	A	PASS	2	2	GL	M	LC	C	N/A	LTJ	AppJ		
2-CKV-32-333	ESSENT CNTL AIR CNTMT CHECK	0-47W848-1 / G-10	A/C	ACT	2	2	CK	SA	O	C	N/A	LTJ CM	AppJ CM	2-SI-32-701 2-SI-32-701	

Appendix B - Valve Test Plan

VALVE ID	FUNCTION	DRAWING/COOR	CAT	ACT/ PASS	CLASS	SIZE	TYPE	ACT	POSITION			TEST REQ	FREQ	PROCEDURE	NOTES
									NORM	SAFE	FAIL				
2-BYV-32-338	CONTROL AIR 2-FCV-32-111 BYPASS	0-47W848-1 / H-9	A	PASS	2	2	GL	M	LC	C	N/A	LTJ	AppJ		
2-CKV-32-343	CONTROL AIR CNTMT CHECK	0-47W848-1 / H-10	A/C	ACT	2	2	CK	SA	O	C	N/A	LTJ CM	AppJ CM	2-SI-32-701 2-SI-32-701	
2-CKV-32-9211	DOWNSTREAM CKV VLV FOR AIR LINE TO 2-LCV-3-172 & -175	0-47W848-10 / F-11	A/C	ACT	3	0.5	CK	SA	C	O/C	N/A	LTP CVC CVO	2Y RO RO		 DTJ-33 DTJ-33
2-CKV-32-9212	UPSTREAM CKV VLV FOR N2 LINE TO 2-LCV-3-172 & -175	0-47W848-10 / F-11	A/C	ACT	3	0.5	CK	SA	C	C	N/A	LTP CVC BDO	2Y RO RO		 DTJ-34 DTJ-34
2-CKV-32-9213	DOWNSTREAM CKV VLV FOR N2 LINE TO 2-LCV-3-172 & -175	0-47W848-10 / F-11	A/C	ACT	3	0.5	CK	SA	C	C	N/A	LTP CVC BDO	2Y RO RO		 DTJ-34 DTJ-34
2-CKV-32-9221	DOWNSTREAM CKV VLV FOR AIR LINE TO 2-LCV-3-173 & -174	0-47W848-10 / F-11	A/C	ACT	3	0.5	CK	SA	C	O/C	N/A	LTP CVC CVO	2Y RO RO		 DTJ-33 DTJ-33

Appendix B - Valve Test Plan

VALVE ID	FUNCTION	DRAWING/COOR	CAT	ACT/ PASS	CLASS	SIZE	TYPE	ACT	POSITION			TEST REQ	FREQ	PROCEDURE	NOTES
									NORM	SAFE	FAIL				
2-CKV-32-9222	UPSTREAM CKV VLV FOR N2 LINE TO 2-LCV-3-173 & -174	0-47W848-10 / F-11	A/C	ACT	3	0.5	CK	SA	C	C	N/A	LTP	2Y		
												CVC	RO		DTJ-34
												BDO	RO		DTJ-34
2-CKV-32-9223	DOWNSTREAM CKV VLV FOR N2 LINE TO 2-LCV-3-173 & -174	0-47W848-10 / F-11	A/C	ACT	3	0.5	CK	SA	C	C	N/A	LTP	2Y		
												CVC	RO		DTJ-34
												BDO	RO		DTJ-34
2-CKV-32-9230	UPSTREAM CKV VLV FOR AIR LINE TO 2-LCV-3-148 & -148A	0-47W848-10 / F-11	A/C	ACT	3	0.5	CK	SA	C	O/C	N/A	LTP	2Y		
												CVC	RO		DTJ-33
												CVO	RO		DTJ-33
2-CKV-32-9231	DOWNSTREAM CKV VLV FOR AIR LINE TO 2-LCV-3 -148 & -148A	0-47W848-10 / F-11	A/C	ACT	3	0.5	CK	SA	C	O/C	N/A	LTP	2Y		
												CVC	RO		DTJ-33
												CVO	RO		DTJ-33
2-CKV-32-9232	UPSTREAM CKV VLV FOR N2 TO 2-LCV-3-148 & -148A	0-47W848-10 / F-11	A/C	ACT	3	0.5	CK	SA	C	C	N/A	LTP	2Y		
												CVC	RO		DTJ-34
												BDO	RO		DTJ-34

Appendix B - Valve Test Plan

VALVE ID	FUNCTION	DRAWING/COOR	CAT	ACT/ PASS	CLASS	SIZE	TYPE	ACT	POSITION			TEST REQ	FREQ	PROCEDURE	NOTES
									NORM	SAFE	FAIL				
2-CKV-32-9233	DOWNSTREAM CKV VLV FOR N2 TO 2-LCV-3-148 & -148A	0-47W848-10 / F-11	A/C	ACT	3	0.5	CK	SA	C	C	N/A	LTP	2Y		
												CVC	RO		DTJ-34
												BDO	RO		DTJ-34
2-CKV-32-9240	UPSTREAM CHECK VLV FOR AIR LINE TO 2-LCV-3 -156 & -156A	0-47W848-10 / F-11	A/C	ACT	3	0.5	CK	SA	C	O/C	N/A	LTP	2Y		
												CVC	RO		DTJ-33
												CVO	RO		DTJ-33
2-CKV-32-9241	DOWNSTREAM CKV VLV FOR AIR LINE TO 2-LCV-3 -156 & -156A	0-47W848-10 / F-11	A/C	ACT	3	0.5	CK	SA	C	O/C	N/A	LTP	2Y		
												CVC	RO		DTJ-33
												CVO	RO		DTJ-33
2-CKV-32-9242	UPSTREAM CKV VLV FOR N2 LINE TO 2-LCV-3-156 & -156A	0-47W848-10 / F-11	A/C	ACT	3	0.5	CK	SA	C	C	N/A	LTP	2Y		
												CVC	RO		DTJ-34
												BDO	RO		DTJ-34
2-CKV-32-9243	DOWNSTREAM CKV VLV FOR N2 LINE TO 2-LCV-3-156 & -156A	0-47W848-10 / F-11	A/C	ACT	3	0.5	CK	SA	C	C	N/A	LTP	2Y		
												CVC	RO		DTJ-34
												BDO	RO		DTJ-34

Appendix B - Valve Test Plan

VALVE ID	FUNCTION	DRAWING/COOR	CAT	ACT/ PASS	CLASS	SIZE	TYPE	ACT	POSITION			TEST REQ	FREQ	PROCEDURE	NOTES
									NORM	SAFE	FAIL				
2-CKV-32-9250	UPSTREAM CKV VLV FOR AIR LINE TO 2-PCV-3-122	0-47W848-10 / F-11	A/C	ACT	3	0.5	CK	SA	C	O/C	N/A	LTP	2Y		
												CVC	RO		DTJ-33
												CVO	RO		DTJ-33
2-CKV-32-9251	DOWNSTREAM CKV VLV FOR AIR LINE TO 2-PCV-3-122	0-47W848-10 / F-11	A/C	ACT	3	0.5	CK	SA	C	O/C	N/A	LTP	2Y		
												CVC	RO		DTJ-33
												CVO	RO		DTJ-33
2-CKV-32-9252	UPSTREAM CKV VLV FOR N2 LINE TO 2-PCV-3-122	0-47W848-10 / F-11	A/C	ACT	3	0.5	CK	SA	C	C	N/A	LTP	2Y		
												CVC	RO		DTJ-34
												BDO	RO		DTJ-34
2-CKV-32-9253	DOWNSTREAM CKV VLV FOR N2 LINE TO 2-PCV-3-122	0-47W848-10 / F-11	A/C	ACT	3	0.5	CK	SA	C	C	N/A	LTP	2Y		
												CVC	RO		DTJ-34
												BDO	RO		DTJ-34
2-CKV-32-9260	UPSTREAM CKV VLV FOR AIR LINE TO LINE TO 2-PCV-3-132	0-47W848-10 / F-11	A/C	ACT	3	0.5	CK	SA	C	O/C	N/A	LTP	2Y		
												CVC	RO		DTJ-33
												CVO	RO		DTJ-33

Appendix B - Valve Test Plan

VALVE ID	FUNCTION	DRAWING/COOR	CAT	ACT/ PASS	CLASS	SIZE	TYPE	ACT	POSITION			TEST REQ	FREQ	PROCEDURE	NOTES
									NORM	SAFE	FAIL				
2-CKV-32-9261	DOWNSTREAM CKV VLV FOR AIR LINE TO 2-PCV-3-132	0-47W848-10 / F-11	A/C	ACT	3	0.5	CK	SA	C	O/C	N/A	LTP	2Y		
												CVC	RO		DTJ-33
												CVO	RO		DTJ-33
2-CKV-32-9262	UPSTREAM CKV VLV FOR N2 LINE TO 2-PCV-3-132	0-47W848-10 / F-11	A/C	ACT	3	0.5	CK	SA	C	C	N/A	LTP	2Y		
												CVC	RO		DTJ-34
												BDO	RO		DTJ-34
2-CKV-32-9263	DOWNSTREAM CKV VLV FOR N2 LINE TO 2-PCV-3-132	0-47W848-10 / F-11	A/C	ACT	3	0.5	CK	SA	C	C	N/A	LTP	2Y		
												CVC	RO		DTJ-34
												BDO	RO		DTJ-34
2-ISV-33-732	SERVICE AIR U2 RX BLDG HDR ISOL	0-47W846-2 / F-4	A	PASS	2	2	DIA	M	LC	C	N/A	LTJ	AppJ		
2-ISV-33-733	SERVICE AIR U2 RX BLDG HDR ISOL	0-47W846-2 / F-4	A	PASS	2	2	DIA	M	LC	C	N/A	LTJ	AppJ		
2-FCV-43-2	PRESSURIZER GAS SAMPLE ISOL	2-47W625-1 / D-3	A	ACT	2	0.375	GL	AO	O/C	C	C	RPI	2Y		
												LTJ	AppJ		
												FSC	Q		
												STC	Q		

Appendix B - Valve Test Plan

VALVE ID	FUNCTION	DRAWING/COOR	CAT	ACT/ PASS	CLASS	SIZE	TYPE	ACT	POSITION			TEST REQ	FREQ	PROCEDURE	NOTES
									NORM	SAFE	FAIL				
2-FCV-43-3	PRESSURIZER GAS SAMPLE ISOL	2-47W625-1 / D-5	A	ACT	2	0.375	GL	AO	O/C	C	C	RPI LTJ FSC STC	2Y AppJ Q Q		
2-FCV-43-11	PRESSURIZER LIQUID SAMPLE ISOL	2-47W625-1 / C-2	A	ACT	2	0.375	GL	AO	O/C	C	C	RPI LTJ FSC STC	2Y AppJ Q Q		
2-FCV-43-12	PRESSURIZER LIQUID SAMPLE ISOL	2-47W625-1 / C-4	A	ACT	2	0.375	GL	AO	O/C	C	C	RPI LTJ FSC STC	2Y AppJ Q Q		
2-FCV-43-22	HOT LEGS 1/3 SAMPLE ISOL	2-47W625-1 / F-5	A	ACT	2	0.375	GL	AO	O/C	C	C	RPI LTJ FSC STC	2Y AppJ Q Q		
2-FCV-43-23	HOT LEGS 1/3 SAMPLE ISOL	2-47W625-1 / D-5	A	ACT	2	0.375	GL	AO	O/C	C	C	RPI LTJ FSC STC	2Y AppJ Q Q		

Appendix B - Valve Test Plan

VALVE ID	FUNCTION	DRAWING/COOR	CAT	ACT/ PASS	CLASS	SIZE	TYPE	ACT	POSITION			TEST REQ	FREQ	PROCEDURE	NOTES
									NORM	SAFE	FAIL				
2-FCV-43-34	ACCUM TANK SAMPLE HDR ISOL	2-47W625-2 / B-2	A	ACT	2	0.375	GL	AO	O/C	C	C	RPI LTJ FSC STC	2Y AppJ Q Q		
2-FCV-43-35	ACCUM TANK SAMPLE HDR ISOL	2-47W625-2 / C-4	A	ACT	2	0.375	GL	AO	O/C	C	C	RPI LTJ FSC STC	2Y AppJ Q Q		
2-FCV-43-55	STEAM GEN 1 DRUM/BLDN SAMPLE ISOL	2-47W625-2 / C-6	B	ACT	2	0.375	GL	AO	O/C	C	C	RPI FSC STC	2Y Q Q		
2-FCV-43-58	STEAM GEN 2 DRUM/BLDN SAMPLE ISOL	2-47W625-2 / C-6	B	ACT	2	0.375	GL	AO	O/C	C	C	RPI FSC STC	2Y Q Q		
2-FCV-43-61	STEAM GEN 3 DRUM/BLDN SAMPLE ISOL	2-47W625-2 / D-7	B	ACT	2	0.375	GL	AO	O/C	C	C	RPI FSC STC	2Y Q Q		
2-FCV-43-64	STEAM GEN 4 DRUM/BLDN SAMPLE ISOL	2-47W625-2 / E-8	B	ACT	2	0.375	GL	AO	O/C	C	C	RPI FSC STC	2Y Q Q		

Appendix B - Valve Test Plan

VALVE ID	FUNCTION	DRAWING/COOR	CAT	ACT/ PASS	CLASS	SIZE	TYPE	ACT	POSITION			TEST REQ	FREQ	PROCEDURE	NOTES
									NORM	SAFE	FAIL				
2-FCV-43-201	LOCA H2 CNTMT MONITOR INLET ISOL	2-47W625-11 / H-5	A	ACT	2	0.375	GL	SO	O/C	C	C	RPI LTJ FSC STC	2Y AppJ Q Q		
2-FCV-43-202	LOCA H2 CNTMT MONITOR OUTLET ISOL	2-47W625-11 / F-5	A	ACT	2	0.375	GL	SO	O/C	C	C	RPI LTJ FSC STC	2Y AppJ Q Q		
2-FCV-43-433	LOCA H2 CNTMT MONITOR U/S SAMPLE ISOL	2-47W625-11 / H-5	A	ACT	2	0.375	GL	SO	O/C	C	C	RPI LTJ FSC STC	2Y AppJ Q Q		
2-FCV-43-434	LOCA H2 CNTMT MONITOR D/S SAMPLE ISOL	2-47W625-11 / F-5	A	ACT	2	0.375	GL	SO	O/C	C	C	RPI LTJ FSC STC	2Y AppJ Q Q		
2-RTV-43-677	2-FI-43-9 ROOT	2-47W625-1 / G-6	B	PASS	2	1	GL	M	C	C	N/A	NTR	NTR		
2-ISV-43-1631	ZINC INJECTION ISOLATION VALVE	2-47W625-1 / H-6	B	PASS	2	0.5	GL	M	C	C	N/A	NTR	NTR		
2-ISV-52-500	PENETRATION 26B ILRT OUTSIDE	47W331-3 / H-1	A	PASS	2	0.75	GA	M	LC	C	N/A	LTJ	AppJ		
2-ISV-52-501	PENETRATION 26A ILRT OUTSIDE	47W331-3 / H-1	A	PASS	2	0.75	GA	M	LC	C	N/A	LTJ	AppJ		
2-ISV-52-502	PEN 96A INTERGRATED LE AK RATE TEST OUTSIDE	47W331-3 / H-1	A	PASS	2	0.75	GA	M	LC	C	N/A	LTJ	AppJ		

Appendix B - Valve Test Plan

VALVE ID	FUNCTION	DRAWING/COOR	CAT	ACT/ PASS	CLASS	SIZE	TYPE	ACT	POSITION			TEST REQ	FREQ	PROCEDURE	NOTES
									NORM	SAFE	FAIL				
2-ISV-52-503	PEN 96B INTERGRATED LE AK RATE TEST OUTSIDE	47W331-3 / H-1	A	PASS	2	0.75	GA	M	LC	C	N/A	LTJ	AppJ		
2-ISV-52-504	PENETRATION 26B ILRT INSIDE	47W331-3 / H-1	A	PASS	2	0.75	GA	M	LC	C	N/A	LTJ	AppJ		
2-ISV-52-505	PENETRATION 26A ILRT INSIDE	47W331-3 / H-1	A	PASS	2	0.75	GA	M	LC	C	N/A	LTJ	AppJ		
2-ISV-52-506	PEN 96A INTERGRATED LE AK RATE TEST INSIDE	47W331-3 / H-1	A	PASS	2	0.75	GA	M	LC	C	N/A	LTJ	AppJ		
2-ISV-52-507	PEN 96B INTERGRATED LE AK RATE TEST INSIDE	47W331-3 / H-1	A	PASS	2	0.75	GA	M	LC	C	N/A	LTJ	AppJ		
2-ISV-59-522	UNIT 2 RB DI WATER HEADER ISOLATION	0-47W856-1 / C-3	A	PASS	2	2	DIA	M	LC	C	N/A	LTJ	AppJ		
2-ISV-59-698	UNIT 2 RB DI WATER HEADER ISOLATION	0-47W856-1 / C-3	A	PASS	2	2	DIA	M	LC	C	N/A	LTJ	AppJ		
2-FCV-61-96	GLYCOL COOLED FLOOR SUPPLY HEADER ISOL	2-47W814-2 / E-9	A	ACT	2	2	DIA	AO	O	C	C	RPI LTJ FSC STC	2Y AppJ Q Q		
2-FCV-61-97	GLYCOL COOLED FLOOR SUPPLY HEADER ISOL	2-47W814-2 / E-9	A	ACT	2	2	DIA	AO	O	C	C	RPI LTJ FSC STC	2Y AppJ Q Q		
2-FCV-61-110	GLYCOL COOLED FLOOR RETURN HEADER ISOL	2-47W814-2 / G-8	A	ACT	2	2	DIA	AO	O	C	C	RPI LTJ FSC STC	2Y AppJ Q Q		

Appendix B - Valve Test Plan

VALVE ID	FUNCTION	DRAWING/COOR	CAT	ACT/ PASS	CLASS	SIZE	TYPE	ACT	POSITION			TEST REQ	FREQ	PROCEDURE	NOTES
									NORM	SAFE	FAIL				
2-FCV-61-122	GLYCOL COOLED FLOOR RETURN HEADER ISOL	2-47W814-2 / G-8	A	ACT	2	2	DIA	AO	O	C	C	RPI LTJ FSC STC	2Y AppJ Q Q		
2-FCV-61-191	GLYCOL SUPPLY TO AHUS CONTAINMENT ISOLATION	2-47W814-2 / B-6	A	ACT	2	4	DIA	AO	O	C	C	RPI LTJ FSC STC	2Y AppJ Q Q		
2-FCV-61-192	GLYCOL SUPPLY TO AHUS CONTAINMENT ISOLATION	2-47W814-2 / B-7	A	ACT	2	4	DIA	AO	O	C	C	RPI LTJ FSC STC	2Y AppJ Q Q		
2-FCV-61-193	GLYCOL RETURN AUX BLDG ISOLATION	2-47W814-2 / B-6	A	ACT	2	4	DIA	AO	O	C	C	RPI LTJ FSC STC	2Y AppJ Q Q		

Appendix B - Valve Test Plan

VALVE ID	FUNCTION	DRAWING/COOR	CAT	ACT/ PASS	CLASS	SIZE	TYPE	ACT	POSITION			TEST REQ	FREQ	PROCEDURE	NOTES
									NORM	SAFE	FAIL				
2-FCV-61-194	GLYCOL RETURN CONTAINMENT ISOLATION	2-47W814-2 / B-7	A	ACT	2	4	DIA	AO	O	C	C	RPI LTJ FSC STC	2Y AppJ Q Q		
2-CKV-61-533	GLYCOL SUPPLY HEADER BYPASS CHECK	2-47W814-2 / B-7	A/C	ACT	2	0.375	CK	SA	C	O/C	N/A	LTJ CM	AppJ CM		
2-CKV-61-658	ICE CONDENSER FLOOR DRAIN GATE 1	2-47W814-2 / D-12	C	ACT	3	12	CK	SA	C	O	N/A	CVO BDC	RO RO		DTJ-10 : Class C* DTJ-10
2-CKV-61-659	ICE CONDENSER FLOOR DRAIN GATE 2	2-47W814-2 / D-12	C	ACT	3	12	CK	SA	C	O	N/A	CVO BDC	RO RO		DTJ-10 : Class C* DTJ-10
2-CKV-61-660	ICE CONDENSER FLOOR DRAIN GATE 3	2-47W814-2 / D-12	C	ACT	3	12	CK	SA	C	O	N/A	CVO BDC	RO RO		DTJ-10 : Class C* DTJ-10
2-CKV-61-661	ICE CONDENSER FLOOR DRAIN GATE 4	2-47W814-2 / D-12	C	ACT	3	12	CK	SA	C	O	N/A	CVO BDC	RO RO		DTJ-10 : Class C* DTJ-10
2-CKV-61-662	ICE CONDENSER FLOOR DRAIN GATE 5	2-47W814-2 / D-12	C	ACT	3	12	CK	SA	C	O	N/A	CVO BDC	RO RO		DTJ-10 : Class C* DTJ-10
2-CKV-61-663	ICE CONDENSER FLOOR DRAIN GATE 6	2-47W814-2 / D-12	C	ACT	3	12	CK	SA	C	O	N/A	CVO BDC	RO RO		DTJ-10 : Class C* DTJ-10

Appendix B - Valve Test Plan

VALVE ID	FUNCTION	DRAWING/COOR	CAT	ACT/ PASS	CLASS	SIZE	TYPE	ACT	POSITION			TEST REQ	FREQ	PROCEDURE	NOTES
									NORM	SAFE	FAIL				
2-CKV-61-664	ICE CONDENSER FLOOR DRAIN GATE 7	2-47W814-2 / D-12	C	ACT	3	12	CK	SA	C	O	N/A	CVO BDC	RO RO		DTJ-10 : Class C* DTJ-10
2-CKV-61-665	ICE CONDENSER FLOOR DRAIN GATE 8	2-47W814-2 / D-12	C	ACT	3	12	CK	SA	C	O	N/A	CVO BDC	RO RO		DTJ-10 : Class C* DTJ-10
2-CKV-61-666	ICE CONDENSER FLOOR DRAIN GATE 9	2-47W814-2 / D-12	C	ACT	3	12	CK	SA	C	O	N/A	CVO BDC	RO RO		DTJ-10 : Class C* DTJ-10
2-CKV-61-667	ICE CONDENSER FLOOR DRAIN GATE 10	2-47W814-2 / D-12	C	ACT	3	12	CK	SA	C	O	N/A	CVO BDC	RO RO		DTJ-10 : Class C* DTJ-10
2-CKV-61-668	ICE CONDENSER FLOOR DRAIN GATE 11	2-47W814-2 / D-12	C	ACT	3	12	CK	SA	C	O	N/A	CVO BDC	RO RO		DTJ-10 : Class C* DTJ-10
2-CKV-61-669	ICE CONDENSER FLOOR DRAIN GATE 12	2-47W814-2 / D-12	C	ACT	3	12	CK	SA	C	O	N/A	CVO BDC	RO RO		DTJ-10 : Class C* DTJ-10
2-CKV-61-670	ICE CONDENSER FLOOR DRAIN GATE 13	2-47W814-2 / D-12	C	ACT	3	12	CK	SA	C	O	N/A	CVO BDC	RO RO		DTJ-10 : Class C* DTJ-10
2-CKV-61-671	ICE CONDENSER FLOOR DRAIN GATE 14	2-47W814-2 / D-12	C	ACT	3	12	CK	SA	C	O	N/A	CVO BDC	RO RO		DTJ-10 : Class C* DTJ-10
2-CKV-61-672	ICE CONDENSER FLOOR DRAIN GATE 15	2-47W814-2 / D-12	C	ACT	3	12	CK	SA	C	O	N/A	CVO BDC	RO RO		DTJ-10 : Class C* DTJ-10

Appendix B - Valve Test Plan

VALVE ID	FUNCTION	DRAWING/COOR	CAT	ACT/ PASS	CLASS	SIZE	TYPE	ACT	POSITION			TEST REQ	FREQ	PROCEDURE	NOTES
									NORM	SAFE	FAIL				
2-CKV-61-673	ICE CONDENSER FLOOR DRAIN GATE 16	2-47W814-2 / D-12	C	ACT	3	12	CK	SA	C	O	N/A	CVO BDC	RO RO		DTJ-10 : Class C* DTJ-10
2-CKV-61-674	ICE CONDENSER FLOOR DRAIN GATE 17	2-47W814-2 / D-12	C	ACT	3	12	CK	SA	C	O	N/A	CVO BDC	RO RO		DTJ-10 : Class C* DTJ-10
2-CKV-61-675	ICE CONDENSER FLOOR DRAIN GATE 18	2-47W814-2 / D-12	C	ACT	3	12	CK	SA	C	O	N/A	CVO BDC	RO RO		DTJ-10 : Class C* DTJ-10
2-CKV-61-676	ICE CONDENSER FLOOR DRAIN GATE 19	2-47W814-2 / D-12	C	ACT	3	12	CK	SA	C	O	N/A	CVO BDC	RO RO		DTJ-10 : Class C* DTJ-10
2-CKV-61-677	ICE CONDENSER FLOOR DRAIN GATE 20	2-47W814-2 / D-12	C	ACT	3	12	CK	SA	C	O	N/A	CVO BDC	RO RO		DTJ-10 : Class C* DTJ-10
2-CKV-61-680	GLYCOL RETURN HEADER BYPASS CHECK	2-47W814-2 / B-7	A/C	ACT	2	0.375	CK	SA	C	O/C	N/A	LTJ CM	AppJ CM		
2-CKV-61-692	GLYCOL COOLED FLOOR SUPPLY BYPASS CHECK	2-47W814-2 / F-9	A/C	ACT	2	0.375	CK	SA	C	O/C	N/A	LTJ CM	AppJ CM		
2-CKV-61-745	GLYCOL COOLED FLOOR RETURN BYPASS CHECK	2-47W814-2 / G-8	A/C	ACT	2	0.375	CK	SA	C	O/C	N/A	LTJ CM	AppJ CM		
2-FCV-62-61	CVCS SEAL WATER RETURN HEADER ISOL	2-47W809-1 / B-6	A	ACT	2	4	GA	MO	O	C	FAI	RPI LTJ STC	2Y AppJ RO		 DTJ-14

Appendix B - Valve Test Plan

VALVE ID	FUNCTION	DRAWING/COOR	CAT	ACT/ PASS	CLASS	SIZE	TYPE	ACT	POSITION			TEST REQ	FREQ	PROCEDURE	NOTES
									NORM	SAFE	FAIL				
2-FCV-62-63	CVCS SEAL WATER RETURN HEADER ISOL	2-47W809-1 / B-7	A	ACT	2	4	GA	MO	O	C	FAI	RPI	2Y		
												LTJ	AppJ		
												STC	RO		DTJ-14
2-FCV-62-69	CVCS LETDOWN ISOLATION	2-47W809-1 / A-2	B	ACT	1	3	GL	AO	O/C	C	C	RPI	2Y		
												FSC	CSD		DTJ-15
												STC	CSD		DTJ-15
2-FCV-62-70	CVCS LETDOWN ISOLATION	2-47W809-1 / A-2	B	ACT	1	3	GL	AO	O/C	C	C	RPI	2Y		
												FSC	CSD		DTJ-15
												STC	CSD		DTJ-15
2-FCV-62-72	CVCS LETDOWN ORIFICE A ISOLATION	2-47W809-1 / A-4	A	ACT	2	2	GL	AO	O	C	C	RPI	2Y		
												LTJ	AppJ		
												FSC	Q		
												STC	Q		
2-FCV-62-73	CVCS LETDOWN ORIFICE B ISOLATION	2-47W809-1 / A-4	A	ACT	2	2	GL	AO	O	C	C	RPI	2Y		
												LTJ	AppJ		
												FSC	Q		
												STC	Q		
2-FCV-62-74	CVCS LETDOWN ORIFICE C ISOLATION	2-47W809-1 / A-3	A	ACT	2	2	GL	AO	O	C	C	RPI	2Y		
												LTJ	AppJ		
												FSC	Q		
												STC	Q		

Appendix B - Valve Test Plan

VALVE ID	FUNCTION	DRAWING/COOR	CAT	ACT/ PASS	CLASS	SIZE	TYPE	ACT	POSITION			TEST REQ	FREQ	PROCEDURE	NOTES
									NORM	SAFE	FAIL				
2-FCV-62-76	CVCS LETDOWN ORIFICE ISOLATION	2-47W809-1 / A-5	A	ACT	2	2	GL	AO	O	C	C	RPI	2Y		
												LTJ	AppJ		
												FSC	Q		
												STC	Q		
2-FCV-62-77	CVCS LP LETDOWN ISOL	2-47W809-1 / A-7	A	ACT	2	2	GL	AO	O	C	C	RPI	2Y		
												LTJ	AppJ		
												FSC	CSD		DTJ-15
												STC	CSD		DTJ-15
2-FCV-62-84	PZR AUXILARY SPRAY LINE ISOLATION	2-47W809-1 / B-2	B	ACT	1	3	GL	AO	C	C	C	RPI	2Y		
												FSC	CSD		DTJ-08
												STC	CSD		DTJ-08
2-FCV-62-90	CVCS CHARGING HEADER ISOLATION	2-47W809-1 / D-7	B	ACT	2	3	GA	MO	O	C	FAI	RPI	2Y		
												STC	CSD		DTJ-15
2-FCV-62-91	CVCS CHARGING HEADER ISOLATION	2-47W809-1 / D-7	B	ACT	2	3	GA	MO	O	C	FAI	RPI	2Y		
												STC	CSD		DTJ-15
2-LCV-62-132	VOLUME CONTROL TANK OUTLET ISOLATION	2-47W809-1 / E-9	B	ACT	2	4	GA	MO	O	C	FAI	RPI	2Y		
												STC	CSD		DTJ-16
2-LCV-62-133	VOLUME CONTROL TANK OUTLET ISOLATION	2-47W809-1 / E-9	B	ACT	2	4	GA	MO	O	C	FAI	RPI	2Y		
												STC	CSD		DTJ-16
2-LCV-62-135	RWST CVCS SUPPLY HDR ISOLATION	2-47W809-1 / H-9	B	ACT	2	8	GA	MO	C	O/C	FAI	RPI	2Y		
												STC	CSD		DTJ-16
												STO	CSD		DTJ-16

Appendix B - Valve Test Plan

VALVE ID	FUNCTION	DRAWING/COOR	CAT	ACT/ PASS	CLASS	SIZE	TYPE	ACT	POSITION			TEST REQ	FREQ	PROCEDURE	NOTES
									NORM	SAFE	FAIL				
2-LCV-62-136	RWST CVCS SUPPLY HDR ISOLATION	2-47W809-1 / H-9	B	ACT	2	8	GA	MO	C	O/C	FAI	RPI	2Y		
												STC	CSD		DTJ-16
												STO	CSD		DTJ-16
2-CKV-62-504	RWST TO CVCS CHG PUMP SUCTION CHECK	2-47W809-1 / G-9	C	ACT	2	8	CK	SA	C	O/C	N/A	CVC	RO		DTJ-11
												CVO	RO		DTJ-11
2-RFV-62-505	CHARGING PUMP SUCTION HDR RELIEF	2-47W809-1 / G-9	C	ACT	2	0.75	RV	SA	C	O/C	N/A	RV	RV		
2-CKV-62-523	CCP 2A-A MINIFLOW CHECK	2-47W809-1 / G-8	A/C	ACT	2	2	CK	SA	C	O/C	N/A	LTP	2Y		
												CVC	Q		
												CVO	Q		
2-CKV-62-525	CCP 2A-A DISCHARGE CHECK	2-47W809-1 / G-8	A/C	ACT	2	4	CK	SA	O	O/C	N/A	LT	2Y		
												CVC	RO		DTJ-11
												CVO	RO		DTJ-11
2-CKV-62-530	CCP 2B-B MINIFLOW CHECK	2-47W809-1 / F-8	A/C	ACT	2	2	CK	SA	C	O/C	N/A	LTP	2Y		
												CVC	Q		
												CVO	Q		
2-CKV-62-532	CCP 2B-B DISCHARGE CHECK	2-47W809-1 / F-8	A/C	ACT	2	4	CK	SA	O	O/C	N/A	LT	2Y		
												CVC	RO		DTJ-11
												CVO	RO		DTJ-11
2-CKV-62-543	CVCS CHARGING HEADER CHECK	2-47W809-1 / A-6	C	ACT	2	3	CK	SA	O	C	N/A	CM	CM		
2-CKV-62-560	RCP 1 SEAL WATER INJECTION CHK	2-47W809-1 / F-6	C	ACT	1	2	CK	SA	O	O/C	N/A	CM	CM		
2-CKV-62-561	RCP 2 SEAL WATER INJECTION CHK	2-47W809-1 / F-6	C	ACT	1	2	CK	SA	O	O/C	N/A	CM	CM		

Appendix B - Valve Test Plan

VALVE ID	FUNCTION	DRAWING/COOR	CAT	ACT/ PASS	CLASS	SIZE	TYPE	ACT	POSITION			TEST REQ	FREQ	PROCEDURE	NOTES
									NORM	SAFE	FAIL				
2-CKV-62-562	RCP 3 SEAL WATER INJECTION CHK	2-47W809-1 / H-5	C	ACT	1	2	CK	SA	O	O/C	N/A	CM	CM		
2-CKV-62-563	RCP 4 SEAL WATER INJECTION CHK	2-47W809-1 / H-5	C	ACT	1	2	CK	SA	O	O/C	N/A	CM	CM		
2-CKV-62-576	RCP 1 SEAL WATER INJECTION CHECK	2-47W809-1 / E-4	C	ACT	1	2	CK	SA	O	O/C	N/A	CM	CM		
2-CKV-62-577	RCP 2 SEAL WATER INJECTION CHECK	2-47W809-1 / E-2	C	ACT	1	2	CK	SA	O	O/C	N/A	CM	CM		
2-CKV-62-578	RCP 3 SEAL WATER INJECTION CHECK	2-47W809-1 / G-2	C	ACT	1	2	CK	SA	O	O/C	N/A	CM	CM		
2-CKV-62-579	RCP 4 SEAL WATER INJECTION CHECK	2-47W809-1 / G-4	C	ACT	1	2	CK	SA	O	O/C	N/A	CM	CM		
2-RFV-62-636	CVCS SEAL WTR RETURN HEADER RELIEF	2-47W809-1 / B-6	C	ACT	2	2	RV	SA	C	O/C	N/A	RV	RV		
2-CKV-62-638	CVCS NORM CHARGING CHECK	2-47W809-1 / A-1	C	ACT	1	3	CK	SA	O	C	N/A	CM	CM		
2-CKV-62-639	CVCS SEAL WTR 2-FCV-62-61 EQL CHECK	2-47W809-1 / C-6	A/C	ACT	2	0.75	CK	SA	C	O/C	N/A	LTJ CM	AppJ CM		
2-CKV-62-640	CVCS ALT CHARGING CHECK	2-47W809-1 / A-1	C	ACT	1	3	CK	SA	O	C	N/A	CM	CM		
2-RFV-62-649	CVCS SEAL WATER HX RELIEF	2-47W809-1 / C-8	C	ACT	2	2	RV	SA	C	O/C	N/A	RV	RV		
2-CKV-62-659	CVCS NORM CHARGING CHECK	2-47W809-1 / A-2	C	ACT	1	3	CK	SA	O	C	N/A	CM	CM		
2-CKV-62-660	CVCS ALT CHARGING CHECK	2-47W809-1 / A-2	C	ACT	1	3	CK	SA	O	C	N/A	CM	CM		
2-CKV-62-661	CVCS CHARGING TO RCS SPRAY CHECK	2-47W809-1 / B-2	C	ACT	1	3	CK	SA	O/C	C	N/A	CM	CM		
2-RFV-62-662	CVCS LETDOWN HEADER RELIEF	2-47W809-1 / A-3	A/C	ACT	2	2	RV	SA	C	O/C	N/A	LTJ RV	AppJ RV		
2-RFV-62-675	CVCS LETDOWN RELIEF	2-47W809-1 / B-9	C	ACT	2	2	RV	SA	C	O/C	N/A	RV	RV		
2-CKV-62-1052A	BA XFER PUMP 2A-A DISCH CHECK	0-47W809-5 / F-5	C	ACT	3	2	CK	SA	O/C	O/C	N/A	CVC CVO	Q Q		

Appendix B - Valve Test Plan

VALVE ID	FUNCTION	DRAWING/COOR	CAT	ACT/ PASS	CLASS	SIZE	TYPE	ACT	POSITION			TEST REQ	FREQ	PROCEDURE	NOTES
									NORM	SAFE	FAIL				
2-CKV-62-1052B	BA XFER PUMP 2B-B DISCH CHECK	0-47W809-5 / F-4	C	ACT	3	2	CK	SA	O/C	O/C	N/A	CVC CVO	Q Q		
2-RFV-62-1221	CCP 2A-A SUCTION RELIEF	2-47W809-1 / G-9	C	ACT	2	0.75	RV	SA	C	O/C	N/A	RV	RV		
2-RFV-62-1222	CCP 2B-B SUCTION RELIEF	2-47W809-1 / G-9	C	ACT	2	0.75	RV	SA	C	O/C	N/A	RV	RV		
2-FCV-62-1228	CCP SUCTION TO VCT VENT HDR ISOL	2-47W809-1 / C-10	B	ACT	2	1	GL	AO	O	C	C	RPI FSC STC	2Y CSD CSD		 DTJ-16 DTJ-16
2-FCV-62-1229	CCP SUCTION TO VCT VENT HDR ISOL	2-47W809-1 / C-10	B	ACT	2	1	GL	AO	O	C	C	RPI FSC STC	2Y CSD CSD		 DTJ-16 DTJ-16
2-FCV-63-1	RWST TO RHR SUCTION	2-47W811-1 / E-10	B	ACT	2	14	GA	MO	O	O/C	FAI	RPI STC STO	2Y CSD CSD		 DTJ-19 DTJ-19
2-FCV-63-3	SI PUMP MINI FLOW RECIRC HDR TO RWST ISOL	2-47W811-1 / E-7	B	ACT	2	2	GL	MO	O	O/C	FAI	RPI STC STO	2Y CSD CSD		 DTJ-20 DTJ-20
2-FCV-63-4	SI PUMP 2A-A MINI FLOW RECIRC TO RWST ISOL	2-47W811-1 / E-8	B	ACT	2	2	GL	MO	O	O/C	FAI	RPI STC STO	2Y Q Q		

Appendix B - Valve Test Plan

VALVE ID	FUNCTION	DRAWING/COOR	CAT	ACT/ PASS	CLASS	SIZE	TYPE	ACT	POSITION			TEST REQ	FREQ	PROCEDURE	NOTES
									NORM	SAFE	FAIL				
2-FCV-63-5	RWST TO SI PUMP SUCTION ISOL	2-47W811-1 / D-9	B	ACT	2	6	GA	MO	O	O/C	FAI	RPI	2Y		
												STC	CSD		DTJ-19
												STO	CSD		DTJ-19
2-FCV-63-6	RHR HX A OUTLET TO SI PUMP SUCTION	2-47W811-1 / F-9	B	ACT	2	4	GA	MO	C	O/C	FAI	RPI	2Y		
												STC	Q		
												STO	Q		
2-FCV-63-7	RHR HX 2A-A OUTLET TO SI PUMP 2A-A SUCT	2-47W811-1 / F-9	B	ACT	2	4	GA	MO	C	O/C	FAI	RPI	2Y		
												STC	Q		
												STO	Q		
2-FCV-63-8	RHR PMP 2A-A TO CHG PMP & SIP 2A-A SUCT ISOL	2-47W811-1 / G-9	B	ACT	2	8	GA	MO	C	O/C	FAI	RPI	2Y		
												STC	RO		DTJ-21
												STO	RO		DTJ-21
2-FCV-63-11	RHR HX 2B-B OUTLET TO SIP 2B-B SUCT ISOL	2-47W811-1 / F-9	B	ACT	2	8	GA	MO	C	O/C	FAI	RPI	2Y		
												STC	RO		DTJ-21
												STO	RO		DTJ-21
2-FCV-63-21	SIP 2A-A HOT LEG 1&3 CHK VLV LEAK TEST ISOL	2-47W811-1 / F-5	B	ACT	2	0.75	GL	AO	C	C	C	RPI	2Y		
												FSC	Q		
												STC	Q		

Appendix B - Valve Test Plan

VALVE ID	FUNCTION	DRAWING/COOR	CAT	ACT/ PASS	CLASS	SIZE	TYPE	ACT	POSITION			TEST REQ	FREQ	PROCEDURE	NOTES
									NORM	SAFE	FAIL				
2-FCV-63-22	SI PUMPS TO COLD LEG INJECTION	2-47W811-1 / E-6	B	ACT	2	4	GA	MO	O	O/C	FAI	RPI	2Y		
												STC	CSD		DTJ-22
												STO	CSD		DTJ-22
2-FCV-63-23	COLD LEG ACCUMULATOR FILL FROM SIP 2A-A ISV	2-47W811-1 / E-6	A	ACT	2	1	GL	AO	O	C	C	RPI	2Y		
												LTJ	AppJ		
												FSC	Q		
												STC	Q		
2-FCV-63-24	BORON INJ CL CKV LEAK TEST/ACCUM MAKEUP ISOL	2-47W811-1 / C-6	B	ACT	2	1	GL	AO	C	C	C	RPI	2Y		
												FSC	Q		
												STC	Q		
2-FCV-63-25	SIS BORON INJ TANK OUTLET ISOLATION	2-47W811-1 / B-7	B	ACT	2	4	GA	MO	C	O/C	FAI	RPI	2Y		
												STC	CSD		DTJ-23
												STO	CSD		DTJ-23
2-FCV-63-26	SIS BORON INJ TANK OUTLET ISOLATION	2-47W811-1 / B-7	B	ACT	2	4	GA	MO	C	O/C	FAI	RPI	2Y		
												STC	CSD		DTJ-23
												STO	CSD		DTJ-23
2-RFV-63-28	PENET X-30 PRESSURE RELIEF	2-47W811-1 / D-6	A/C	ACT	2	0.75	RV	SA	C	O/C	N/A	LTJ	AppJ		
												RV	RV		

Appendix B - Valve Test Plan

VALVE ID	FUNCTION	DRAWING/COOR	CAT	ACT/ PASS	CLASS	SIZE	TYPE	ACT	POSITION			TEST REQ	FREQ	PROCEDURE	NOTES
									NORM	SAFE	FAIL				
2-FCV-63-47	SAFETY INJ PUMP 2A-A SUCTION ISOLATION	2-47W811-1 / E-9	B	ACT	2	6	GA	MO	O	O/C	FAI	RPI STC STO	2Y Q Q		
2-FCV-63-48	SAFETY INJ PUMP 2B-B SUCTION ISOLATION	2-47W811-1 / E-9	B	ACT	2	6	GA	MO	O	O/C	FAI	RPI STC STO	2Y Q Q		
2-FCV-63-63	SIS COLD LEG ACCUM 4 N2 MAKEUP	2-47W811-1 / A-5	B	PASS	2	1	GL	AO	C	C	C	RPI	2Y		
2-FCV-63-64	SIS ACCUM N2 HDR INLET VLV	0-47W830-6 / B-6	A	ACT	2	1	GL	AO	O/C	C	C	RPI LTJ FSC STC	2Y AppJ Q Q		
2-FCV-63-67	SIS COLD LEG ACCUM 4 OUTLET ISOLATION	2-47W811-1 / B-5	B	PASS	1	10	GA	MO	O	O	FAI	RPI	2Y		
2-FCV-63-68	SIS COLD LEG ACCUM 4 CKV LEAK TEST ISOL	2-47W811-1 / C-5	B	ACT	2	0.75	GL	AO	C	C	C	RPI FSC STC	2Y Q Q		
2-FCV-63-69	SI PUMP TO COLD LEG 4 CHK VLV LEAK TEST ISOL	2-47W811-1 / H-2	B	ACT	2	0.75	GL	AO	C	C	C	RPI FSC STC	2Y Q Q		
2-FCV-63-70	SIS COLD LEG ACCUM 4 MAKEUP	2-47W811-1 / B-6	B	ACT	2	1	GL	AO	C	C	C	RPI FSC STC	2Y Q Q		

Appendix B - Valve Test Plan

VALVE ID	FUNCTION	DRAWING/COOR	CAT	ACT/ PASS	CLASS	SIZE	TYPE	ACT	POSITION			TEST REQ	FREQ	PROCEDURE	NOTES
									NORM	SAFE	FAIL				
2-FCV-63-71	SIS CHECK VLV TEST LINE HOLDUP TANK ISOL	2-47W811-1 / D-5	A	ACT	2	0.75	GL	AO	O/C	C	C	RPI	2Y		
												LTJ	AppJ		
												FSC	Q		
												STC	Q		
2-FCV-63-72	CONTAINMENT SUMP TO RHR PUMP 2A-A ISOL	2-47W811-1 / H-7	B	ACT	2	18	GA	MO	C	O/C	FAI	RPI	2Y		
												STC	RO		DTJ-24
												STO	RO		DTJ-24
2-FCV-63-73	CONTAINMENT SUMP TO RHR PUMP 2B-B ISOL	2-47W811-1 / G-7	B	ACT	2	18	GA	MO	C	O/C	FAI	RPI	2Y		
												STC	RO		DTJ-24
												STO	RO		DTJ-24
2-FCV-63-77	SIS COLD LEG ACCUM 3 MAKEUP	2-47W811-1 / B-4	B	ACT	2	1	GL	AO	C	C	C	RPI	2Y		
												FSC	Q		
												STC	Q		
2-FCV-63-78	SIS COLD LEG ACCUM 3 CKV LEAK TEST ISOL	2-47W811-1 / C-4	B	ACT	2	0.75	GL	AO	C	C	C	RPI	2Y		
												FSC	Q		
												STC	Q		

Appendix B - Valve Test Plan

VALVE ID	FUNCTION	DRAWING/COOR	CAT	ACT/ PASS	CLASS	SIZE	TYPE	ACT	POSITION			TEST REQ	FREQ	PROCEDURE	NOTES
									NORM	SAFE	FAIL				
2-FCV-63-79	SI PUMP TO COLD LEG 3 CHK VLV LEAK TEST ISOL	2-47W811-1 / G-5	B	ACT	2	0.75	GL	AO	C	C	C	RPI	2Y		
												FSC	Q		
												STC	Q		
2-FCV-63-80	SIS COLD LEG ACCUM 3 OUTLET ISOLATION	2-47W811-1 / B-4	B	PASS	1	10	GA	MO	O	O	FAI	RPI	2Y		
2-FCV-63-84	SIS CHECK VLV LEAK TEST HOLDUP TANK ISOL	2-47W811-1 / D-6	A	ACT	2	0.75	GL	AO	C	C	C	RPI	2Y		
												LTJ	AppJ		
												FSC	Q		
												STC	Q		
2-FCV-63-87	SIS COLD LEG ACCUM 3 N2 MAKEUP	2-47W811-1 / A-4	B	PASS	2	1	GL	AO	C	C	C	RPI	2Y		
2-FCV-63-93	RHR TO COLD LEG 2 & 3 INJECTION ISOLATION	2-47W811-1 / G-6	B	ACT	2	8	GA	MO	O	O/C	FAI	RPI	2Y		
												STC	CSD		DTJ-25
												STO	CSD		DTJ-25
2-FCV-63-94	RHR TO COLD LEG 1 & 4 INJECTION ISOLATION	2-47W811-1 / G-6	B	ACT	2	8	GA	MO	O	O/C	FAI	RPI	2Y		
												STC	CSD		DTJ-25
												STO	CSD		DTJ-25

Appendix B - Valve Test Plan

VALVE ID	FUNCTION	DRAWING/COOR	CAT	ACT/ PASS	CLASS	SIZE	TYPE	ACT	POSITION			TEST REQ	FREQ	PROCEDURE	NOTES
									NORM	SAFE	FAIL				
2-FCV-63-95	SIS COLD LEG ACCUM 2 MAKEUP	2-47W811-1 / B-3	B	ACT	2	1	GL	AO	C	C	C	RPI FSC STC	2Y Q Q		
2-FCV-63-96	SIS ACCUM TK 2 CHECK VLV LEAK TEST	2-47W811-1 / C-2	B	ACT	2	0.75	GL	AO	C	C	C	RPI FSC STC	2Y Q Q		
2-FCV-63-97	SI PUMP TO COLD LEG 2 CHK VLV LEAK TEST ISOL	2-47W811-1 / H-4	B	ACT	2	0.75	GL	AO	C	C	C	RPI FSC STC	2Y Q Q		
2-FCV-63-98	SIS COLD LEG ACCUM 2 OUTLET ISOLATION	2-47W811-1 / B-3	B	PASS	1	10	GA	MO	O	O	FAI	RPI	2Y		
2-FCV-63-107	SIS COLD LEG ACCUM 2 N2 MAKEUP	2-47W811-1 / A-2	B	PASS	2	1	GL	AO	C	C	C	RPI	2Y		
2-FCV-63-111	COLD LEG 2 & 3 RHR CHK VLV LEAK TEST ISOL	2-47W811-1 / H-6	B	ACT	2	0.75	GL	AO	C	C	C	RPI FSC STC	2Y Q Q	2-SI-63-915-A 2-SI-63-902-A 2-SI-63-915-A 2-SI-63-902-A 2-SI-63-915-A	
2-FCV-63-112	COLD LEG 1 & 4 RHR CHK VLV LEAK TEST ISOL	2-47W811-1 / H-6	B	ACT	2	0.75	GL	AO	C	C	C	RPI FSC STC	2Y Q Q		

Appendix B - Valve Test Plan

VALVE ID	FUNCTION	DRAWING/COOR	CAT	ACT/ PASS	CLASS	SIZE	TYPE	ACT	POSITION			TEST REQ	FREQ	PROCEDURE	NOTES
									NORM	SAFE	FAIL				
2-FCV-63-115	SIS COLD LEG ACCUM 1 MAKEUP	2-47W811-1 / B-2	B	ACT	2	1	GL	AO	C	C	C	RPI FSC STC	2Y Q Q		
2-FCV-63-116	SIS COLD LEG ACCUM 1 CKV LEAK TEST ISOL	2-47W811-1 / C-1	B	ACT	2	0.75	GL	AO	C	C	C	RPI FSC STC	2Y Q Q		
2-FCV-63-117	SI PMP TO COLD LEG 1 CKV VLV LEAK TEST ISOL	2-47W811-1 / H-1	B	ACT	2	0.75	GL	AO	C	C	C	RPI FSC STC	2Y Q Q		
2-FCV-63-118	SIS COLD LEG ACCUM 1 OUTLET ISOLATION	2-47W811-1 / B-1	B	PASS	1	10	GA	MO	O	O	FAI	RPI	2Y		
2-FCV-63-121	SI PMP TO COLD LEG CHK VLV LEAK TEST ISOL	2-47W811-1 / F-5	B	ACT	2	0.75	GL	AO	C	C	C	RPI FSC STC	2Y Q Q		
2-FCV-63-127	SIS COLD LEG ACCUM 1 N2 MAKEUP	2-47W811-1 / A-1	B	PASS	2	1	GL	AO	C	C	C	RPI	2Y		
2-FCV-63-152	SIP 2A-A COLD LEG INJ FLOW CNTL	2-47W811-1 / E-7	B	ACT	2	4	GA	MO	O	O/C	FAI	RPI STC STO	2Y Q Q		
2-FCV-63-153	SIP 2B-B COLD LEG INJ FLOW CNTL	2-47W811-1 / E-7	B	ACT	2	4	GA	MO	O	O/C	FAI	RPI STC STO	2Y Q Q		

Appendix B - Valve Test Plan

VALVE ID	FUNCTION	DRAWING/COOR	CAT	ACT/ PASS	CLASS	SIZE	TYPE	ACT	POSITION			TEST REQ	FREQ	PROCEDURE	NOTES
									NORM	SAFE	FAIL				
2-FCV-63-156	SI PUMP 2A-A HOT LEG 1 & 3 INJECTION	2-47W811-1 / F-6	B	ACT	2	4	GA	MO	C	O/C	FAI	RPI STC STO	2Y Q Q		
2-FCV-63-157	SI PUMP 2B-B HOT LEG 2 & 4 INJECTION	2-47W811-1 / D-6	B	ACT	2	4	GA	MO	C	O/C	FAI	RPI STC STO	2Y Q Q		
2-FCV-63-158	RHR HOT LEG 1 & 3 CKV LEAK TEST ISOL	2-47W811-1 / G-5	B	ACT	2	0.75	GL	AO	C	C	C	RPI FSC STC	2Y Q Q		
2-FCV-63-163	HOT LEG 1 SIS CHECK VLV LEAK TEST ISOLATION	2-47W811-1 / F-5	B	ACT	2	0.75	GL	AO	C	C	C	RPI FSC STC	2Y Q Q		
2-FCV-63-164	HOT LEG 3 SIS CHECK VLV LEAK TEST ISOLATION	2-47W811-1 / E-4	B	ACT	2	0.75	GL	AO	C	C	C	RPI FSC STC	2Y Q Q		
2-FCV-63-165	HOT LEG 2 SIS CHECK VLV LEAK TEST ISOLATION	2-47W811-1 / C-3	B	ACT	2	0.75	GL	AO	C	C	C	RPI FSC STC	2Y Q Q		

Appendix B - Valve Test Plan

VALVE ID	FUNCTION	DRAWING/COOR	CAT	ACT/ PASS	CLASS	SIZE	TYPE	ACT	POSITION			TEST REQ	FREQ	PROCEDURE	NOTES
									NORM	SAFE	FAIL				
2-FCV-63-166	HOT LEG 4 SIS CHECK VLV LEAK TEST ISOLATION	2-47W811-1 / E-5	B	ACT	2	0.75	GL	AO	C	C	C	RPI	2Y		
												FSC	Q		
												STC	Q		
2-FCV-63-167	HOT LEG 2 & 4 SIS CHK VLV LEAK TEST ISOL	2-47W811-1 / E-5	B	ACT	2	0.75	GL	AO	C	C	C	RPI	2Y		
												FSC	Q		
												STC	Q		
2-FCV-63-172	RHR TO HOT LEG 1 & 3 INJECTION ISOLATION	2-47W811-1 / F-6	B	ACT	2	12	GA	MO	C	O/C	FAI	RPI	2Y		
												STC	CSD		DTJ-25
												STO	CSD		DTJ-25
2-FCV-63-174	BORON INJ TO COLD LEGS CHK VLV LEAK TEST ISOL	2-47W811-1 / C-6	B	ACT	2	0.75	GL	AO	C	C	C	RPI	2Y		
												FSC	Q		
												STC	Q		
2-FCV-63-175	SI PUMP 2B-B MINI FLOW RECIRC TO RWST	2-47W811-1 / E-8	B	ACT	2	2	GL	MO	O	O/C	FAI	RPI	2Y		
												STC	Q		
												STO	Q		
2-FCV-63-177	RHR HX 2A-A OUTLET TO SIP 2A-A SUCT ISOL	2-47W811-1 / F-9	B	PASS	2	4	GA	MO	O	O	FAI	RPI	2Y		

Appendix B - Valve Test Plan

VALVE ID	FUNCTION	DRAWING/COOR	CAT	ACT/ PASS	CLASS	SIZE	TYPE	ACT	POSITION			TEST REQ	FREQ	PROCEDURE	NOTES
									NORM	SAFE	FAIL				
2-FCV-63-185	RHR SUPPLY 2-FCV-74-2 LEAK TEST LINE ISOL	2-47W811-1 / D-5	B	ACT	2	0.75	GL	AO	C	C	C	RPI	2Y		
												FSC	Q		
												STC	Q		
2-FCV-63-186	RHR SUPPLY 2-FCV-74-1 LEAK TEST LINE ISOL	2-47W811-1 / C-6	B	ACT	2	0.75	GL	AO	C	C	C	RPI	2Y		
												FSC	Q		
												STC	Q		
2-CKV-63-502	RWST TO RHR SUCTION CHECK	2-47W811-1 / F-9	C	ACT	2	12	CK	SA	C	O/C	N/A	CVC	RO		DTJ-18
												CVO	RO		DTJ-18
2-CKV-63-510	RWST TO SAFETY INJ PUMP SUCTION CHECK	2-47W811-1 / D-9	C	ACT	2	8	CK	SA	C	O/C	N/A	CVC	RO		DTJ-11
												CVO	RO		DTJ-11
2-RFV-63-511	SAFETY INJECTION PUMP 2A-A RELIEF	2-47W811-1 / E-9	C	ACT	2	0.75	RV	SA	C	O/C	N/A	RV	RV		
2-CKV-63-524	SAFETY INJ PUMP 2A-A DISCHARGE CHECK	2-47W811-1 / E-8	A/C	ACT	2	4	CK	SA	C	O/C	N/A	LT	2Y		
												CVC	RO		DTJ-11
												CVO	RO		DTJ-11
2-CKV-63-526	SAFETY INJ PUMP 2B-B DISCHARGE CHECK	2-47W811-1 / D-8	A/C	ACT	2	4	CK	SA	C	O/C	N/A	LT	2Y		
												CVC	RO		DTJ-11
												CVO	RO		DTJ-11

Appendix B - Valve Test Plan

VALVE ID	FUNCTION	DRAWING/COOR	CAT	ACT/ PASS	CLASS	SIZE	TYPE	ACT	POSITION			TEST REQ	FREQ	PROCEDURE	NOTES
									NORM	SAFE	FAIL				
2-CKV-63-528	SI PUMP 2A-A MINI FLOW RECIRC CHECK	2-47W811-1 / E-8	A/C	ACT	2	0.75	CK	SA	C	O/C	N/A	LT CVC CVO	2Y Q Q		
2-CKV-63-530	SI PUMP 2B-B MINI FLOW RECIRC CHECK	2-47W811-1 / D-8	A/C	ACT	2	0.75	CK	SA	C	O/C	N/A	LT CVC CVO	2Y Q Q		
2-RFV-63-534	SI PUMP 2A-A HOT LEG INJ LINE DISCH RELIEF	2-47W811-1 / E-7	C	ACT	2	0.75	RV	SA	C	O/C	N/A	RV	RV		
2-RFV-63-535	SI PUMP COLD LEG INJ LINE DISCH RELIEF	2-47W811-1 / E-7	C	ACT	2	0.75	RV	SA	C	O/C	N/A	RV	RV		
2-RFV-63-536	SI PUMP 2B-B HOT LEG INJ LINE DISCH RELIEF	2-47W811-1 / D-7	C	ACT	2	0.75	RV	SA	C	O/C	N/A	RV	RV		
2-CKV-63-543	HOT LEG 1 SAFETY INJ CHECK	2-47W811-1 / F-3	A/C	ACT	1	2	CK	SA	C	O/C	N/A	LTP CVC CVO	2Y RO RO		PIV DTJ-11 DTJ-11
2-CKV-63-545	HOT LEG 3 SAFETY INJ CHECK	2-47W811-1 / F-3	A/C	ACT	1	2	CK	SA	C	O/C	N/A	LTP CVC CVO	2Y RO RO		PIV DTJ-11 DTJ-11
2-CKV-63-547	HOT LEG 2 SAFETY INJ CHECK	2-47W811-1 / E-3	A/C	ACT	1	2	CK	SA	C	O/C	N/A	LTP CVC CVO	2Y RO RO		PIV DTJ-11 DTJ-11
2-CKV-63-549	HOT LEG 4 SAFETY INJ CHECK	2-47W811-1 / E-3	A/C	ACT	1	2	CK	SA	C	O/C	N/A	LTP CVC CVO	2Y RO RO		PIV DTJ-11 DTJ-11

Appendix B - Valve Test Plan

VALVE ID	FUNCTION	DRAWING/COOR	CAT	ACT/ PASS	CLASS	SIZE	TYPE	ACT	POSITION			TEST REQ	FREQ	PROCEDURE	NOTES
									NORM	SAFE	FAIL				
2-CKV-63-551	COLD LEG 1 SAFETY INJ CHECK	2-47W811-1 / H-1	A/C	ACT	1	2	CK	SA	C	O/C	N/A	LTP CVC CVO	2Y RO RO		PIV DTJ-11 DTJ-11
2-CKV-63-553	COLD LEG 2 SAFETY INJ CHECK	2-47W811-1 / H-3	A/C	ACT	1	2	CK	SA	C	O/C	N/A	LTP CVC CVO	2Y RO RO		PIV DTJ-11 DTJ-11
2-CKV-63-555	COLD LEG 3 SAFETY INJ CHECK	2-47W811-1 / G-3	A/C	ACT	1	2	CK	SA	C	O/C	N/A	LTP CVC CVO	2Y RO RO		PIV DTJ-11 DTJ-11
2-CKV-63-557	COLD LEG 4 SAFETY INJ CHECK	2-47W811-1 / G-2	A/C	ACT	1	2	CK	SA	C	O/C	N/A	LTP CVC CVO	2Y RO RO		PIV DTJ-11 DTJ-11
2-CKV-63-558	HOT LEG 4 SAFETY INJ CHECK	2-47W811-1 / E-2	A/C	ACT	1	6	CK	SA	C	O/C	N/A	LTP CVC CVO	2Y RO RO		PIV DTJ-11 DTJ-11
2-CKV-63-559	HOT LEG 2 SAFETY INJ CHECK	2-47W811-1 / E-1	A/C	ACT	1	6	CK	SA	C	O/C	N/A	LTP CVC CVO	2Y RO RO		PIV DTJ-11 DTJ-11
2-CKV-63-560	COLD LEG 1 INJ HEADER CHECK	2-47W811-1 / E-1	A/C	ACT	1	10	CK	SA	C	O/C	N/A	LTP CM	2Y CM		PIV
2-CKV-63-561	COLD LEG 2 INJ HEADER CHECK	2-47W811-1 / D-1	A/C	ACT	1	10	CK	SA	C	O/C	N/A	LTP CM	2Y CM		PIV

Appendix B - Valve Test Plan

VALVE ID	FUNCTION	DRAWING/COOR	CAT	ACT/ PASS	CLASS	SIZE	TYPE	ACT	POSITION			TEST REQ	FREQ	PROCEDURE	NOTES
									NORM	SAFE	FAIL				
2-CKV-63-562	COLD LEG 3 INJ HEADER CHECK	2-47W811-1 / E-2	A/C	ACT	1	10	CK	SA	C	O/C	N/A	LTP CM	2Y CM		PIV
2-CKV-63-563	COLD LEG 4 INJ HEADER CHECK	2-47W811-1 / F-2	A/C	ACT	1	10	CK	SA	C	O/C	N/A	LTP CM	2Y CM		PIV
2-RFV-63-577	SIS BORON INJECTION TNK OUTLET RELIEF	2-47W811-1 / A-7	C	ACT	2	0.75	RV	SA	C	O/C	N/A	RV	RV		
2-CKV-63-581	BORON INJ LINE CHECK	2-47W811-1 / C-6	A/C	ACT	1	3	CK	SA	C	O/C	N/A	LTP CVC CVO	2Y RO RO		PIV DTJ-11 DTJ-11
2-CKV-63-586	COLD LEG 1 BORON INJ CHECK	2-47W811-1 / E-1	A/C	ACT	1	1.5	CK	SA	C	O/C	N/A	LTP CVC CVO	2Y RO RO		PIV DTJ-11 DTJ-11
2-CKV-63-587	COLD LEG 2 BORON INJ CHECK	2-47W811-1 / D-2	A/C	ACT	1	1.5	CK	SA	C	O/C	N/A	LTP CVC CVO	2Y RO RO		PIV DTJ-11 DTJ-11
2-CKV-63-588	COLD LEG 3 BORON INJ CHECK	2-47W811-1 / E-2	A/C	ACT	1	1.5	CK	SA	C	O/C	N/A	LTP CVC CVO	2Y RO RO		PIV DTJ-11 DTJ-11
2-CKV-63-589	COLD LEG 4 BORON INJ CHECK	2-47W811-1 / F-2	A/C	ACT	1	1.5	CK	SA	C	O/C	N/A	LTP CVC CVO	2Y RO RO		PIV DTJ-11 DTJ-11
2-RFV-63-602	SIS COLD LEG ACCUM 1 RELIEF	2-47W811-1 / A-2	C	ACT	2	0.75	RV	SA	C	O/C	N/A	RV	RV		
2-RFV-63-603	SIS COLD LEG ACCUM 2 RELIEF	2-47W811-1 / A-3	C	ACT	2	0.75	RV	SA	C	O/C	N/A	RV	RV		

Appendix B - Valve Test Plan

VALVE ID	FUNCTION	DRAWING/COOR	CAT	ACT/ PASS	CLASS	SIZE	TYPE	ACT	POSITION			TEST REQ	FREQ	PROCEDURE	NOTES
									NORM	SAFE	FAIL				
2-RFV-63-604	SIS COLD LEG ACCUM 3 RELIEF	2-47W811-1 / A-4	C	ACT	2	0.75	RV	SA	C	O/C	N/A	RV	RV		
2-RFV-63-605	SIS COLD LEG ACCUM 4 RELIEF	2-47W811-1 / A-6	C	ACT	2	0.75	RV	SA	C	O/C	N/A	RV	RV		
2-CKV-63-622	SIS COLD LEG ACCUM 1 OUTLET CHECK	2-47W811-1 / D-1	A/C	ACT	1	10	CK	SA	C	O/C	N/A	LTP CM	2Y CM		PIV
2-CKV-63-623	SIS COLD LEG ACCUM 2 OUTLET CHECK	2-47W811-1 / D-1	A/C	ACT	1	10	CK	SA	C	O/C	N/A	LTP CM	2Y CM		PIV
2-CKV-63-624	SIS COLD LEG ACCUM 3 OUTLET CHECK	2-47W811-1 / D-3	A/C	ACT	1	10	CK	SA	C	O/C	N/A	LTP CM	2Y CM		PIV
2-CKV-63-625	SIS COLD LEG ACCUM 4 OUTLET CHECK	2-47W811-1 / D-3	A/C	ACT	1	10	CK	SA	C	O/C	N/A	LTP CM	2Y CM		PIV
2-RFV-63-626	RHR TO COLD LEG 2 & 3 INJ LINE RELIEF	2-47W811-1 / G-7	C	ACT	2	2	RV	SA	C	O/C	N/A	RV	RV		
2-RFV-63-627	RHR TO COLD LEG 1 & 4 INJ LINE RELIEF	2-47W811-1 / F-7	C	ACT	2	2	RV	SA	C	O/C	N/A	RV	RV		
2-CKV-63-632	COLD LEG 2 RHR INJ LINE CHECK	2-47W811-1 / G-2	A/C	ACT	1	6	CK	SA	C	O/C	N/A	LTP CVC CVO	2Y RO RO		PIV DTJ-18 DTJ-18
2-CKV-63-633	COLD LEG 1 RHR INJ LINE CHECK	2-47W811-1 / G-1	A/C	ACT	1	6	CK	SA	C	O/C	N/A	LTP CVC CVO	2Y RO RO		PIV DTJ-18 DTJ-18
2-CKV-63-634	COLD LEG 3 RHR INJ LINE CHECK	2-47W811-1 / G-3	A/C	ACT	1	6	CK	SA	C	O/C	N/A	LTP CVC CVO	2Y RO RO		PIV DTJ-18 DTJ-18

Appendix B - Valve Test Plan

VALVE ID	FUNCTION	DRAWING/COOR	CAT	ACT/ PASS	CLASS	SIZE	TYPE	ACT	POSITION			TEST REQ	FREQ	PROCEDURE	NOTES
									NORM	SAFE	FAIL				
2-CKV-63-635	COLD LEG 4 RHR INJ LINE CHECK	2-47W811-1 / G-1	A/C	ACT	1	6	CK	SA	C	O/C	N/A	LTP CVC CVO	2Y RO RO		PIV DTJ-18 DTJ-18
2-RFV-63-637	RHR TO HOT LEG 1 & 3 INJ LINE RELIEF	2-47W811-1 / F-7	C	ACT	2	0.75	RV	SA	C	O/C	N/A	RV	RV		
2-CKV-63-640	HOT LEG 1 RHR INJ LINE CHECK	2-47W811-1 / G-3	A/C	ACT	1	8	CK	SA	C	O/C	N/A	LTP CVC CVO	2Y RO RO		PIV DTJ-18 DTJ-18
2-CKV-63-641	2-CKV-63-641 HOT LEG 1 INJ HEADER CHECK	2-47W811-1 / F-1	A/C	ACT	1	6	CK	SA	C	O/C	N/A	LTP CVC CVO	2Y RO RO		PIV DTJ-18 DTJ-18
2-CKV-63-643	HOT LEG 3 RHR INJ LINE CHECK	2-47W811-1 / F-3	A/C	ACT	1	8	CK	SA	C	O/C	N/A	LTP CVC CVO	2Y RO RO		PIV DTJ-18 DTJ-18
2-CKV-63-644	HOT LEG 3 INJ HEADER CHECK	2-47W811-1 / D-2	A/C	ACT	1	6	CK	SA	C	O/C	N/A	LTP CVC CVO	2Y RO RO		PIV DTJ-18 DTJ-18
2-CKV-63-725	SIS RELIEF VALVE DISCHARGE HEADER CHECK	2-47W811-1 / E-7	C	ACT	2	2	CK	SA	C	O/C	N/A	CM	CM		
2-RFV-63-835	RHR HX 1B-B OUTLET TO SI PUMP SUCTION RELIEF	2-47W811-1 / E-10	C	ACT	2	0.75	RV	SA	C	O/C	N/A	RV	RV		

Appendix B - Valve Test Plan

VALVE ID	FUNCTION	DRAWING/COOR	CAT	ACT/ PASS	CLASS	SIZE	TYPE	ACT	POSITION			TEST REQ	FREQ	PROCEDURE	NOTES
									NORM	SAFE	FAIL				
2-CKV-63-868	2-CKV-63-868 CONTAINMENT N2 HEADER CHECK	0-47W830-6A / B-7	A/C	ACT	2	1	CK	SA	O	C	N/A	LTJ BDO CVC	AppJ CSD CSD		 DTJ-28 DTJ-28
2-ISV-63-1000A	SAFETY INJECTION HOSE ISOLATION VALVE	2-47W811-1 / E-7	B	PASS	2	2	GL	M	C	C	N/A	NTR	NTR		
2-ISV-63-1001A	SAFETY INJECTION HOSE ISOLATION VALVE	2-47W811-1 / E-7	B	PASS	2	2	GL	M	C	C	N/A	NTR	NTR		
2-ISV-63-1010B	SAFETY INJECTION HOSE ISOLATION VALVE	2-47W811-1 / D-7	B	PASS	2	2	GL	M	C	C	N/A	NTR	NTR		
2-ISV-63-1011B	SAFETY INJECTION HOSE ISOLATION VALVE	2-47W811-1 / D-7	B	PASS	2	2	GL	M	C	C	N/A	NTR	NTR		
2-FCV-67-9A	ERCW STRAINER 2A-A BACKWASH	0-47W845-1 / G-9	B	ACT	3	4	BA	MO	C	O	FAI	STO	Q	0-SI-67-907-A	
2-FCV-67-9B	ERCW STRAINER 2A-A FLUSH	0-47W845-1 / F-9	B	ACT	3	4	BA	MO	C	O	FAI	STO	Q	0-SI-67-907-A	
2-FCV-67-10A	ERCW STRAINER 2B-B BACKWASH	0-47W845-1 / G-3	B	ACT	3	4	BA	MO	C	O	FAI	STO	Q	0-SI-67-907-B	
2-FCV-67-10B	ERCW STRAINER 2B-B FLUSH	0-47W845-1 / H-3	B	ACT	3	4	BA	MO	C	O	FAI	STO	Q	0-SI-67-907-B	
2-FCV-67-65	DG HX 2B1/2B2 ERCW SUP HDR 2A ISOL	0-47W845-1 / C-3	B	PASS	3	8	BF	MO	C	C	FAI	RPI	2Y		
2-FCV-67-66	DG HX 2A1/2A2 ERCW SUP HDR 1A ISOL	0-47W845-1 / C-9	B	ACT	3	8	BF	MO	C	O	FAI	RPI STO	2Y Q	0-SI-67-914-A 0-SI-67-907-A	
2-FCV-67-67	DG HX 2B1/2B2 ERCW SUP HDR 1B ISOL	0-47W845-1 / C-4	B	ACT	3	8	BF	MO	C	O	FAI	RPI STO	2Y Q	0-SI-67-914-B 0-SI-67-907-B	
2-FCV-67-68	DG HX 2A1/2A2 ERCW SUP HDR 2B ISOL	0-47W845-1 / C-8	B	PASS	3	8	BF	MO	C	C	FAI	RPI	2Y		

Appendix B - Valve Test Plan

VALVE ID	FUNCTION	DRAWING/COOR	CAT	ACT/ PASS	CLASS	SIZE	TYPE	ACT	POSITION			TEST REQ	FREQ	PROCEDURE	NOTES
									NORM	SAFE	FAIL				
2-FCV-67-83	LOWER CNTMT CLR HDR A ERCW SUP ISOL	2-47W845-3 / H-8	A	ACT	2	6	BF	MO	O	C	FAI	RPI LTJ STC	2Y AppJ CSD		DTJ-27
2-FCV-67-87	LOWER CNTMT CLR HDR A ERCW RET ISOL	2-47W845-3 / H-7	A	ACT	2	6	BF	MO	O	C	FAI	RPI LTJ STC	2Y AppJ CSD		DTJ-27
2-FCV-67-88	LOWER CNTMT CLR HDR A ERCW RET ISOL	2-47W845-3 / H-8	A	ACT	2	6	BF	MO	O	C	FAI	RPI LTJ STC	2Y AppJ CSD		DTJ-27
2-FCV-67-89	LOWER CNTMT CLR HDR A ERCW SUP ISOL	2-47W845-3 / H-7	A	ACT	2	6	BF	MO	O	C	FAI	RPI LTJ STC	2Y AppJ CSD		DTJ-27
2-FCV-67-91	LOWER CNTMT CLR HDR C ERCW SUP ISOL	2-47W845-3 / G-8	A	ACT	2	6	BF	MO	O	C	FAI	RPI LTJ STC	2Y AppJ CSD		DTJ-27
2-FCV-67-95	LOWER CNTMT CLR HDR C ERCW RET ISOL	2-47W845-3 / F-7	A	ACT	2	6	BF	MO	O	C	FAI	RPI LTJ STC	2Y AppJ CSD		DTJ-27

Appendix B - Valve Test Plan

VALVE ID	FUNCTION	DRAWING/COOR	CAT	ACT/ PASS	CLASS	SIZE	TYPE	ACT	POSITION			TEST REQ	FREQ	PROCEDURE	NOTES
									NORM	SAFE	FAIL				
2-FCV-67-96	LOWER CNTMT CLR HDR C ERCW RET ISOL	2-47W845-3 / F-8	A	ACT	2	6	BF	MO	O	C	FAI	RPI LTJ STC	2Y AppJ CSD		DTJ-27
2-FCV-67-97	LOWER CNTMT CLR HDR C ERCW SUP ISOL	2-47W845-3 / G-7	A	ACT	2	6	BF	MO	O	C	FAI	RPI LTJ STC	2Y AppJ CSD		DTJ-27
2-FCV-67-99	LOWER CNTMT CLR HDR B ERCW SUP ISOL	2-47W845-3 / F-8	A	ACT	2	6	BF	MO	O	C	FAI	RPI LTJ STC	2Y AppJ CSD		DTJ-27
2-FCV-67-103	LOWER CNTMT CLR HDR B ERCW RET ISOL	2-47W845-3 / E-7	A	ACT	2	6	BF	MO	O	C	FAI	RPI LTJ STC	2Y AppJ CSD		DTJ-27
2-FCV-67-104	LOWER CNTMT CLR HDR B ERCW RET ISOL	2-47W845-3 / E-8	A	ACT	2	6	BF	MO	O	C	FAI	RPI LTJ STC	2Y AppJ CSD		DTJ-27
2-FCV-67-105	LOWER CNTMT CLR HDR B ERCW SUP ISOL	2-47W845-3 / F-7	A	ACT	2	6	BF	MO	O	C	FAI	RPI LTJ STC	2Y AppJ CSD		DTJ-27

Appendix B - Valve Test Plan

VALVE ID	FUNCTION	DRAWING/COOR	CAT	ACT/ PASS	CLASS	SIZE	TYPE	ACT	POSITION			TEST REQ	FREQ	PROCEDURE	NOTES
									NORM	SAFE	FAIL				
2-FCV-67-107	LOWER CNTMT CLR HDR D ERCW SUP ISOL	2-47W845-3 / E-8	A	ACT	2	6	BF	MO	O	C	FAI	RPI	2Y		
												LTJ	AppJ		
												STC	CSD		DTJ-27
2-FCV-67-111	LOWER CNTMT CLR HDR D ERCW RET ISOL	2-47W845-3 / D-7	A	ACT	2	6	BF	MO	O	C	FAI	RPI	2Y		
												LTJ	AppJ		
												STC	CSD		DTJ-27
2-FCV-67-112	LOWER CNTMT CLR HDR D ERCW RET ISOL	2-47W845-3 / D-8	A	ACT	2	6	BF	MO	O	C	FAI	RPI	2Y		
												LTJ	AppJ		
												STC	CSD		DTJ-27
2-FCV-67-113	LOWER CNTMT CLR HDR D ERCW SUP ISOL	2-47W845-3 / E-7	A	ACT	2	6	BF	MO	O	C	FAI	RPI	2Y		
												LTJ	AppJ		
												STC	CSD		DTJ-27
2-FCV-67-123	CNTMT SPRAY HX 2B-B ERCW SUPPLY	0-47W845-2 / D-2	B	ACT	3	18	BF	MO	C	O/C	FAI	RPI	2Y	0-SI-67-908-B	
												STC	CSD	0-SI-67-908-B	DTJ-12
												STO	CSD	0-SI-67-908-B	DTJ-12
2-FCV-67-124	CNTMT SPRAY HX 2B-B ERCW RETURN	0-47W845-2 / E-3	B	ACT	3	18	BF	MO	C	O/C	FAI	RPI	2Y	0-SI-67-908-B	
												STC	CSD	0-SI-67-908-B	DTJ-12
												STO	CSD	0-SI-67-908-B	DTJ-12
2-FCV-67-125	CNTMT SPRAY HX 2A-A ERCW SUPPLY	0-47W845-2 / C-3	B	ACT	3	18	BF	MO	C	O/C	FAI	RPI	2Y	0-SI-67-908-A	
												STC	CSD	0-SI-67-908-A	DTJ-12
												STO	CSD		DTJ-12

Appendix B - Valve Test Plan

VALVE ID	FUNCTION	DRAWING/COOR	CAT	ACT/ PASS	CLASS	SIZE	TYPE	ACT	POSITION			TEST REQ	FREQ	PROCEDURE	NOTES
									NORM	SAFE	FAIL				
2-FCV-67-126	CNTMT SPRAY HX 2A-A ERCW RETURN	0-47W845-2 / D-4	B	ACT	3	18	BF	MO	C	O/C	FAI	RPI	2Y	0-SI-67-908-A	
												STC	CSD	0-SI-67-908-A	DTJ-12
												STO	CSD		DTJ-12
2-FCV-67-130	UPPER CNTMT VENT CLR 1A ERCW SUP HDR ISOL	2-47W845-3 / C-8	A	ACT	2	2	PLG	MO	O	C	FAI	RPI	2Y		
												LTJ	AppJ		
												STC	Q		
2-FCV-67-131	UPPER CNTMT VENT CLR 1A ERCW RET HDR ISOL	2-47W845-3 / D-8	A	ACT	2	2	PLG	MO	O	C	FAI	RPI	2Y		
												LTJ	AppJ		
												STC	Q		
2-FCV-67-133	UPPER CNTMT VENT CLR 1C ERCW SUP HDR ISOL	2-47W845-3 / B-8	A	ACT	2	2	PLG	MO	O	C	FAI	RPI	2Y		
												LTJ	AppJ		
												STC	Q		
2-FCV-67-134	UPPER CNTMT VENT CLR 1C ERCW RET HDR ISOL	2-47W845-3 / C-8	A	ACT	2	2	PLG	MO	O	C	FAI	RPI	2Y		
												LTJ	AppJ		
												STC	Q		

Appendix B - Valve Test Plan

VALVE ID	FUNCTION	DRAWING/COOR	CAT	ACT/ PASS	CLASS	SIZE	TYPE	ACT	POSITION			TEST REQ	FREQ	PROCEDURE	NOTES
									NORM	SAFE	FAIL				
2-FCV-67-138	UPPER CNTMT VENT CLR 1B ERCW SUP HDR ISOL	2-47W845-3 / B-8	A	ACT	2	2	PLG	MO	O	C	FAI	RPI LTJ STC	2Y AppJ Q		
2-FCV-67-139	UPPER CNTMT VENT CLR 1B ERCW RET HDR ISOL	2-47W845-3 / B-8	A	ACT	2	2	PLG	MO	O	C	FAI	RPI LTJ STC	2Y AppJ Q		
2-FCV-67-141	UPPER CNTMT VENT CLR 1D ERCW SUP HDR ISOL	2-47W845-3 / A-8	A	ACT	2	2	PLG	MO	O	C	FAI	RPI LTJ STC	2Y AppJ Q		
2-FCV-67-142	UPPER CNTMT VENT CLR 1D ERCW RET HDR ISOL	2-47W845-3 / A-8	A	ACT	2	2	PLG	MO	O	C	FAI	RPI LTJ STC	2Y AppJ Q		
2-FCV-67-143	CCS HX B OUTLET ERCW FLOW CNTL BYP	0-47W845-2 / B-4	B	ACT	3	12	GL	MO	O/C	O/C	FAI	RPI STC STO	2Y Q Q		

Appendix B - Valve Test Plan

VALVE ID	FUNCTION	DRAWING/COOR	CAT	ACT/ PASS	CLASS	SIZE	TYPE	ACT	POSITION			TEST REQ	FREQ	PROCEDURE	NOTES
									NORM	SAFE	FAIL				
2-FCV-67-146	CCS HX B OUTLET ERCW FLOW CNTL	0-47W845-2 / C-4	B	ACT	3	24	BF	MO	O/C	O/C	FAI	RPI STC STO	2Y Q Q		
2-FCV-67-176	SIP ROOM COOLER 2A-A ERCW SUP FLOW CNTL	2-47W845-7 / D-5	B	ACT	3	1.5	GL	AO	C	O	O	RPI FSO STO	2Y Q Q		
2-FCV-67-182	SIP ROOM COOLER 2B-B ERCW SUP FLOW CNTL	2-47W845-7 / D-7	B	ACT	3	1.5	GL	AO	C	O	O	RPI FSO STO	2Y Q Q		
2-FCV-67-184	CSP ROOM COOLER 2A-A ERCW SUP FLOW CNTL	2-47W845-7 / E-5	B	ACT	3	1.5	GL	AO	C	O	O	RPI FSO STO	2Y Q Q		
2-FCV-67-186	CSP ROOM COOLER 2B-B ERCW SUP FLOW CNTL	2-47W845-7 / E-7	B	ACT	3	1.5	GL	AO	C	O	O	RPI FSO STO	2Y Q Q		
2-FCV-67-217	BA XFER/AFW PMP SPACE CLR 2A-A ERCW SUPPLY	2-47W845-7 / C-4	B	ACT	3	2	GL	AO	O/C	O	O	RPI FSO STO	2Y Q Q	0-SI-67-914-A 0-SI-67-907-A 0-SI-67-907-A	

Appendix B - Valve Test Plan

VALVE ID	FUNCTION	DRAWING/COOR	CAT	ACT/ PASS	CLASS	SIZE	TYPE	ACT	POSITION			TEST REQ	FREQ	PROCEDURE	NOTES
									NORM	SAFE	FAIL				
2-FCV-67-219	BA XFER/AFW PMP SPACE CLR 2B-B ERCW FLOW CNT	2-47W845-7 / C-6	B	ACT	3	2	GL	AO	O/C	O	O	RPI	2Y		
												FSO	Q	0-SI-67-907-B	
												STO	Q	0-SI-67-907-B	
2-FCV-67-295	UPPER CNTMT VENT CLR 2A ERCW RET ISOL	2-47W845-3 / D-7	A	ACT	2	2	PLG	MO	O	C	FAI	RPI	2Y		
												LTJ	AppJ		
												STC	Q		
2-FCV-67-296	UPPER CNTMT VENT CLR 2C ERCW RET ISOL	2-47W845-3 / C-7	A	ACT	2	2	PLG	MO	O	C	FAI	RPI	2Y		
												LTJ	AppJ		
												STC	Q		
2-FCV-67-297	UPPER CNTMT VENT CLR 2B ERCW RET ISOL	2-47W845-3 / B-7	A	ACT	2	2	PLG	MO	O	C	FAI	RPI	2Y		
												LTJ	AppJ		
												STC	Q		
2-FCV-67-298	UPPER CNTMT VENT CLR 2D ERCW RET ISOL	2-47W845-3 / A-7	A	ACT	2	2	PLG	MO	O	C	FAI	RPI	2Y		
												LTJ	AppJ		
												STC	Q		
2-FCV-67-336	EGTS ROOM COOLER 2A-A ERCW SUP FLOW CNTL	2-47W845-7 / A-4	B	ACT	3	1	GL	AO	C	O	O	RPI	2Y	0-SI-67-914-A	
												FSO	Q	0-SI-67-907-A	
												STO	Q	0-SI-67-907-A	

Appendix B - Valve Test Plan

VALVE ID	FUNCTION	DRAWING/COOR	CAT	ACT/ PASS	CLASS	SIZE	TYPE	ACT	POSITION			TEST REQ	FREQ	PROCEDURE	NOTES
									NORM	SAFE	FAIL				
2-FCV-67-338	EGTS ROOM COOLER 2B-B ERCW SUP FLOW CNTL	2-47W845-7 / A-6	B	ACT	3	1	GL	AO	C	O	O	RPI	2Y		
												FSO	Q	0-SI-67-907-B	
												STO	Q	0-SI-67-907-B	
2-FCV-67-342	PIPE CHASE COOLER 2A-A ERCW SUP FLOW CNTL	2-47W845-7 / H-5	B	ACT	3	2	GL	AO	O/C	O	O	RPI	2Y		
												FSO	Q		
												STO	Q		
2-FCV-67-344	PIPE CHASE COOLER 2B-B ERCW SUP FLOW CNTL	2-47W845-7 / H-7	B	ACT	3	2	GL	AO	O/C	O	O	RPI	2Y		
												FSO	Q		
												STO	Q		
2-FCV-67-346	PENT ROOM COOLER 2A-A ERCW SUP FLOW CNTL	2-47W845-7 / F-5	B	ACT	3	1.5	GL	AO	O/C	O	O	RPI	2Y		
												FSO	Q		
												STO	Q		
2-FCV-67-348	PENT ROOM COOLER 2B-B ERCW SUP FLOW CNTL	2-47W845-7 / F-7	B	ACT	3	1.5	GL	AO	O/C	O	O	RPI	2Y		
												FSO	Q		
												STO	Q		

Appendix B - Valve Test Plan

VALVE ID	FUNCTION	DRAWING/COOR	CAT	ACT/ PASS	CLASS	SIZE	TYPE	ACT	POSITION			TEST REQ	FREQ	PROCEDURE	NOTES
									NORM	SAFE	FAIL				
2-FCV-67-350	PENT ROOM COOLER 2A-A ERCW SUP FLOW CNTL	2-47W845-7 / G-5	B	ACT	3	1.5	GL	AO	O/C	O	O	RPI FSO STO	2Y Q Q		
2-FCV-67-352	PENT ROOM COOLER 2B-B ERCW SUP FLOW CNTL	2-47W845-7 / G-7	B	ACT	3	1.5	GL	AO	O/C	O	O	RPI FSO STO	2Y Q Q		
2-FCV-67-354	PENT ROOM COOLER 1A-A ERCW SUP FLOW CNTL	2-47W845-7 / F-4	B	ACT	3	1.5	GL	AO	O/C	O	O	RPI FSO STO	2Y Q Q	0-SI-67-914-A 0-SI-67-907-A 0-SI-67-907-A	
2-FCV-67-356	PENT ROOM COOLER 1B-B ERCW SUP FLOW CNTL	2-47W845-7 / F-6	B	ACT	3	1.5	GL	AO	O/C	O	O	RPI FSO STO	2Y Q Q	0-SI-67-914-B 0-SI-67-907-B 0-SI-67-907-B	
2-CKV-67-508A	DG HX 2A1/2A2 ERCW SUP HDR 1A CHECK	0-47W845-1 / C-5	C	ACT	3	8	CK	SA	C	O/C	N/A	CM	CM	0-SI-67-907-A 0-SI-67-911	
2-CKV-67-508B	DG HX 2B1/2B2 ERCW SUP HDR 1B CHECK	0-47W845-1 / C-10	C	ACT	3	8	CK	SA	C	O/C	N/A	CM	CM	0-SI-67-907-B 0-SI-67-911	
2-RFV-67-509A	DG HX 2A2 ERCW RELIEF	0-47W845-1 / B-4	C	ACT	3	0.75	TRV	SA	C	O/C	N/A	RV	RV	1-SI-0-911	
2-RFV-67-509B	DG HX 2B2 ERCW RELIEF	0-47W845-1 / B-4	C	ACT	3	0.75	TRV	SA	C	O/C	N/A	RV	RV	1-SI-0-911	

Appendix B - Valve Test Plan

VALVE ID	FUNCTION	DRAWING/COOR	CAT	ACT/ PASS	CLASS	SIZE	TYPE	ACT	POSITION			TEST REQ	FREQ	PROCEDURE	NOTES
									NORM	SAFE	FAIL				
2-CKV-67-513A	DG HX 2A1/2A2 ERCW SUP HDR 2B CHECK	0-47W845-1 / C-8	C	PASS	3	8	CK	SA	C	C	N/A	NTR	NTR		
2-CKV-67-513B	DG HX 2B1/2B2 ERCW SUP HDR 2A CHECK	0-47W845-1 / C-4	C	PASS	3	8	CK	SA	C	C	N/A	NTR	NTR		
2-RFV-67-514A	DG HX 2A1 ERCW RELIEF	0-47W845-1 / B-4	C	ACT	3	0.75	TRV	SA	C	O/C	N/A	RV	RV	1-SI-0-911	
2-RFV-67-514B	DG HX 2B1 ERCW RELIEF	0-47W845-1 / B-4	C	ACT	3	0.75	TRV	SA	C	O/C	N/A	RV	RV	1-SI-0-911	
2-RFV-67-539A	CS HX 2A ERCW RET HDR RELIEF	0-47W845-2 / D-3	C	ACT	3	2	RV	SA	C	O/C	N/A	RV	RV		
2-RFV-67-539B	CS HX 2B ERCW RET HDR RELIEF	0-47W845-2 / D-3	C	ACT	3	2	RV	SA	C	O/C	N/A	RV	RV		
2-ISV-67-543A	CCS SURGE TANK B ERCW SUP HDR 2A ISOL	0-47W845-2 / C-2	B	ACT	3	3	GA	M	LC	O	N/A	MS	2Y		
2-ISV-67-543B	CCS SURGE TANK B ERCW SUP HDR 2B ISOL	0-47W845-2 / C-2	B	ACT	3	3	GA	M	LC	O	N/A	MS	2Y		
2-ISV-67-544	CCS SURGE TNK B ERCW SUP HDR ISOL	0-47W845-2 / C-1	B	ACT	3	3	GA	M	LC	O/C	N/A	MS	2Y		
2-RFV-67-550	CCX HX B ERCW RELIEF	0-47W845-2 / B-5	C	ACT	3	0.75	TRV	SA	C	O/C	N/A	RV	RV	1-SI-0-911	
2-RFV-67-566A	RCP/CRD VENT CLR A ERCW SUP HDR RELIEF	2-47W845-3 / H-5	C	ACT	3	0.75	TRV	SA	C	O/C	N/A	RV	RV		
2-RFV-67-566B	RCP/CRD VENT CLR B ERCW SUP HDR RELIEF	2-47W845-3 / F-5	C	ACT	3	0.75	TRV	SA	C	O/C	N/A	RV	RV		
2-RFV-67-566C	RCP/CRD VENT CLR C ERCW SUP HDR RELIEF	2-47W845-3 / G-5	C	ACT	3	0.75	TRV	SA	C	O/C	N/A	RV	RV		
2-RFV-67-566D	RCP/CRD VENT CLR D ERCW SUP HDR RELIEF	2-47W845-3 / E-5	C	ACT	3	0.75	TRV	SA	C	O/C	N/A	RV	RV		
2-RFV-67-573A	LOWER CNTMT CLR HDR A ERCW RET RELIEF	2-47W845-3 / G-6	C	ACT	3	0.75	TRV	SA	C	O/C	N/A	RV	RV		
2-RFV-67-573B	LOWER CNTMT CLR HDR B ERCW RET RELIEF	2-47W845-3 / E-6	C	ACT	3	0.75	TRV	SA	C	O/C	N/A	RV	RV		
2-RFV-67-573C	LOWER CNTMT CLR HDR C ERCW RET RELIEF	2-47W845-3 / F-6	C	ACT	3	0.75	TRV	SA	C	O/C	N/A	RV	RV		
2-RFV-67-573D	LOWER CNTMT CLR HDR D ERCW RET RELIEF	2-47W845-3 / D-6	C	ACT	3	0.75	TRV	SA	C	O/C	N/A	RV	RV		
2-CKV-67-575A	2-FCV-67-87 BYPASS CHECK	2-47W845-3 / H-7	A/C	ACT	2	0.5	CK	SA	C	O/C	N/A	LTJ CM	AppJ CM		

Appendix B - Valve Test Plan

VALVE ID	FUNCTION	DRAWING/COOR	CAT	ACT/ PASS	CLASS	SIZE	TYPE	ACT	POSITION			TEST REQ	FREQ	PROCEDURE	NOTES
									NORM	SAFE	FAIL				
2-CKV-67-575B	2-FCV-67-103 BYPASS CHECK	2-47W845-3 / E-7	A/C	ACT	2	0.5	CK	SA	C	O/C	N/A	LTJ CM	AppJ CM		
2-CKV-67-575C	2-FCV-67-95 BYPASS CHECK	2-47W845-3 / G-7	A/C	ACT	2	0.5	CK	SA	C	O/C	N/A	LTJ CM	AppJ CM		
2-CKV-67-575D	2-FCV-67-111 BYPASS CHECK	2-47W845-3 / D-7	A/C	ACT	2	0.5	CK	SA	C	O/C	N/A	LTJ CM	AppJ CM		
2-CKV-67-580A	UPPER CNTMT VENT CLR 2A ERCW SUP HDR CHECK	2-47W845-3 / C-7	A/C	ACT	2	2	CK	SA	O	C	N/A	LTJ BDO CVC	AppJ Q Q		
2-CKV-67-580B	UPPER CNTMT VENT CLR 2B ERCW SUP HDR CHECK	2-47W845-3 / B-7	A/C	ACT	2	2	CK	SA	O	C	N/A	LTJ BDO CVC	AppJ Q Q		
2-CKV-67-580C	UPPER CNTMT VENT CLR 2C ERCW SUP HDR CHECK	2-47W845-3 / B-7	A/C	ACT	2	2	CK	SA	O	C	N/A	LTJ BDO CVC	AppJ Q Q		

Appendix B - Valve Test Plan

VALVE ID	FUNCTION	DRAWING/COOR	CAT	ACT/ PASS	CLASS	SIZE	TYPE	ACT	POSITION			TEST REQ	FREQ	PROCEDURE	NOTES
									NORM	SAFE	FAIL				
2-CKV-67-580D	UPPER CNTMT VENT CLR 2D ERCW SUP HDR CHECK	2-47W845-3 / A-7	A/C	ACT	2	2	CK	SA	O	C	N/A	LTJ BDO CVC	AppJ Q Q		
2-RFV-67-582A	UPPER CNTMT VENT CLR 2A ERCW SUP HDR RELIEF	2-47W845-3 / C-3	C	ACT	3	0.75	TRV	SA	C	O/C	N/A	RV	RV		
2-RFV-67-582B	UPPER CNTMT VENT CLR 2B ERCW SUP HDR RELIEF	2-47W845-3 / B-3	C	ACT	3	0.75	TRV	SA	C	O/C	N/A	RV	RV		
2-RFV-67-582C	UPPER CNTMT VENT CLR 2C ERCW SUP HDR RELIEF	2-47W845-3 / B-3	C	ACT	3	0.75	TRV	SA	C	O/C	N/A	RV	RV		
2-RFV-67-582D	UPPER CNTMT VENT CLR 2D ERCW SUP HDR RELIEF	2-47W845-3 / A-3	C	ACT	3	0.75	TRV	SA	C	O/C	N/A	RV	RV		
2-CKV-67-585A	2-FCV-67-295 BYPASS CHECK	2-47W845-3 / D-7	A/C	ACT	2	0.5	CK	SA	C	O/C	N/A	LTJ CM	AppJ CM		
2-CKV-67-585B	2-FCV-67-297 BYPASS CHECK	2-47W845-3 / B-7	A/C	ACT	2	0.5	CK	SA	C	O/C	N/A	LTJ CM	AppJ CM		
2-CKV-67-585C	2-FCV-67-296 BYPASS CHECK	2-47W845-3 / C-7	A/C	ACT	2	0.5	CK	SA	C	O/C	N/A	LTJ CM	AppJ CM		
2-CKV-67-585D	2-FCV-67-298 BYPASS CHECK	2-47W845-3 / B-7	A/C	ACT	2	0.5	CK	SA	C	O/C	N/A	LTJ CM	AppJ CM		
2-CKV-67-935B	ERCW SCRN WASH PMP 2B-B DISCH CHECK	0-47W845-1 / H-6	C	ACT	3	3	CK	SA	C	O/C	N/A	CM	CM	0-SI-67-906-B 0-SI-67-916 0-SI-67-920-B	
2-RFV-67-1020A	INSTR RM WATER CLR 2A ERCW RELIEF	0-47W845-2 / F-3	C	ACT	3	0.75	TRV	SA	C	O/C	N/A	RV	RV		
2-RFV-67-1020B	INSTR RM WATER CLR 2B ERCW RELIEF	0-47W845-2 / E-3	C	ACT	3	0.75	TRV	SA	C	O/C	N/A	RV	RV		

Appendix B - Valve Test Plan

VALVE ID	FUNCTION	DRAWING/COOR	CAT	ACT/ PASS	CLASS	SIZE	TYPE	ACT	POSITION			TEST REQ	FREQ	PROCEDURE	NOTES
									NORM	SAFE	FAIL				
2-RFV-67-1022A	CRD VENT COOLER 2A-A ERCW RELIEF	2-47W845-3 / H-4	C	ACT	3	0.75	TRV	SA	C	O/C	N/A	RV	RV		
2-RFV-67-1022B	CRD VENT COOLER 2B-B ERCW RELIEF	2-47W845-3 / F-4	C	ACT	3	0.75	TRV	SA	C	O/C	N/A	RV	RV		
2-RFV-67-1022C	CRD VENT COOLER 2C-A ERCW RELIEF	2-47W845-3 / G-4	C	ACT	3	0.75	TRV	SA	C	O/C	N/A	RV	RV		
2-RFV-67-1022D	CRD VENT COOLER 2D-B ERCW RELIEF	2-47W845-3 / D-4	C	ACT	3	0.75	TRV	SA	C	O/C	N/A	RV	RV		
2-RFV-67-1024A	RCP MTR CLR 1 ERCW RELIEF	2-47W845-3 / H-3	C	ACT	3	0.75	TRV	SA	C	O/C	N/A	RV	RV		
2-RFV-67-1024B	RCP MTR CLR 2 ERCW RELIEF	2-47W845-3 / F-3	C	ACT	3	0.75	TRV	SA	C	O/C	N/A	RV	RV		
2-RFV-67-1024C	RCP MTR CLR 3 ERCW RELIEF	2-47W845-3 / G-3	C	ACT	3	0.75	TRV	SA	C	O/C	N/A	RV	RV		
2-RFV-67-1024D	RCP MTR CLR 4 ERCW RELIEF	2-47W845-3 / D-3	C	ACT	3	0.75	TRV	SA	C	O/C	N/A	RV	RV		
2-RFV-67-1025A	LWR CNTMT VENT CLR 2A-A ERCW RELIEF	2-47W845-3 / H-6	C	ACT	3	0.75	TRV	SA	C	O/C	N/A	RV	RV		
2-RFV-67-1025B	LWR CNTMT VENT CLR 2B-B ERCW RELIEF	2-47W845-3 / F-6	C	ACT	3	0.75	TRV	SA	C	O/C	N/A	RV	RV		
2-RFV-67-1025C	LWR CNTMT VENT CLR 2C-A ERCW RELIEF	2-47W845-3 / G-6	C	ACT	3	0.75	TRV	SA	C	O/C	N/A	RV	RV		
2-RFV-67-1025D	LWR CNTMT VENT CLR 2D-B ERCW RELIEF	2-47W845-3 / D-6	C	ACT	3	0.75	TRV	SA	C	O/C	N/A	RV	RV		
2-RFV-67-1026A	UPPER CNTMT VENT CLR 2A ERCW RELIEF	2-47W845-3 / C-3	C	ACT	3	0.75	TRV	SA	C	O/C	N/A	RV	RV		
2-RFV-67-1026B	UPPER CNTMT VENT CLR 2B ERCW RELIEF	2-47W845-3 / B-3	C	ACT	3	0.75	TRV	SA	C	O/C	N/A	RV	RV		
2-RFV-67-1026C	UPPER CNTMT VENT CLR 2C ERCW RELIEF	2-47W845-3 / B-3	C	ACT	3	0.75	TRV	SA	C	O/C	N/A	RV	RV		
2-RFV-67-1026D	UPPER CNTMT VENT CLR 2D ERCW RELIEF	2-47W845-3 / A-3	C	ACT	3	0.75	TRV	SA	C	O/C	N/A	RV	RV		
2-RFV-67-1029A	CVCS CCP ROOM CLR 2A-A ERCW RELIEF	2-47W845-7 / C-2	C	ACT	3	0.75	TRV	SA	C	O/C	N/A	RV	RV		
2-RFV-67-1029B	CVCS CCP ROOM CLR 2B-B ERCW RELIEF	2-47W845-7 / C-8	C	ACT	3	0.75	TRV	SA	C	O/C	N/A	RV	RV		
2-RFV-67-1031A	SIS PMP RM CLR 2A-A ERCW RELIEF	2-47W845-7 / D-2	C	ACT	3	0.75	TRV	SA	C	O/C	N/A	RV	RV		
2-RFV-67-1031B	SIS PMP RM CLR 2B-B ERCW RELIEF	2-47W845-7 / D-6	C	ACT	3	0.75	TRV	SA	C	O/C	N/A	RV	RV		

Appendix B - Valve Test Plan

VALVE ID	FUNCTION	DRAWING/COOR	CAT	ACT/ PASS	CLASS	SIZE	TYPE	ACT	POSITION			TEST REQ	FREQ	PROCEDURE	NOTES
									NORM	SAFE	FAIL				
2-RFV-67-1032A	CS PMP RM CLR 2A-A ERCW RELIEF	2-47W845-7 / D-2	C	ACT	3	0.75	TRV	SA	C	O/C	N/A	RV	RV		
2-RFV-67-1032B	CS PMP RM CLR 2B-B ERCW RELIEF	2-47W845-7 / D-8	C	ACT	3	0.75	TRV	SA	C	O/C	N/A	RV	RV		
2-RFV-67-1033A	RHR PMP RM CLR 2A-A ERCW RELIEF	2-47W845-7 / E-2	C	ACT	3	0.75	TRV	SA	C	O/C	N/A	RV	RV		
2-RFV-67-1033B	RHR PMP RM CLR 2B-B ERCW RELIEF	2-47W845-7 / E-8	C	ACT	3	0.75	TRV	SA	C	O/C	N/A	RV	RV		
2-RFV-67-1034A	PENT ROOM CLR 2A-A ERCW RELIEF	2-47W845-7 / F-2	C	ACT	3	0.75	TRV	SA	C	O/C	N/A	RV	RV	1-SI-0-911	
2-RFV-67-1034B	PENT ROOM CLR 2B-B ERCW RELIEF	2-47W845-7 / F-8	C	ACT	3	0.75	TRV	SA	C	O/C	N/A	RV	RV	1-SI-0-911	
2-RFV-67-1035A	PENT ROOM CLR 2A-A ERCW RELIEF	2-47W845-7 / G-3	C	ACT	3	0.75	TRV	SA	C	O/C	N/A	RV	RV	1-SI-0-911	
2-RFV-67-1035B	PENT ROOM CLR 2B-B ERCW RELIEF	2-47W845-7 / F-8	C	ACT	3	0.75	TRV	SA	C	O/C	N/A	RV	RV	1-SI-0-911	
2-RFV-67-1037A	PENT ROOM COOLER 2A-A ERCW RELIEF	2-47W845-7 / G-2	C	ACT	3	0.75	TRV	SA	C	O/C	N/A	RV	RV	1-SI-0-911	
2-RFV-67-1037B	PENT ROOM COOLER 2B-B ERCW RELIEF	2-47W845-7 / G-8	C	ACT	3	0.75	TRV	SA	C	O/C	N/A	RV	RV	1-SI-0-911	
2-RFV-67-1038A	PIPE CHASE CLR 2A-A ERCW RELIEF	2-47W845-7 / H-2	C	ACT	3	0.75	TRV	SA	C	O/C	N/A	RV	RV	1-SI-0-911	
2-RFV-67-1038B	PIPE CHASE CLR 2B-B ERCW RELIEF	2-47W845-7 / H-8	C	ACT	3	0.75	TRV	SA	C	O/C	N/A	RV	RV		
2-RFV-67-1040A	BA XFER/AFW PMP SPACE CLR 2A-A ERCW RELIEF	2-47W845-7 / B-3	C	ACT	3	0.75	TRV	SA	C	O/C	N/A	RV	RV	1-SI-0-911	
2-RFV-67-1040B	BA XFER/AFW PMP SPACE CLR 2B-B ERCW RELIEF	2-47W845-7 / B-7	C	ACT	3	0.75	TRV	SA	C	O/C	N/A	RV	RV	1-SI-0-911	
2-RFV-67-1041A	EGTS ROOM COOLER 2A-A ERCW RELIEF	2-47W845-7 / A-2	C	ACT	3	0.75	TRV	SA	C	O/C	N/A	RV	RV	1-SI-0-911	
2-RFV-67-1041B	EGTS ROOM COOLER 2B-B ERCW RELIEF	2-47W845-7 / A-8	C	ACT	3	0.75	TRV	SA	C	O/C	N/A	RV	RV	1-SI-0-911	
2-RFV-67-1043A	ERCW STRAINER 2A-A RELIEF	0-47W845-1 / F-9	C	ACT	3	0.75	TRV	SA	C	O/C	N/A	RV	RV	1-SI-0-911	
2-RFV-67-1043B	ERCW STRAINER 2B-B RELIEF	0-47W845-1 / G-4	C	ACT	3	0.75	TRV	SA	C	O/C	N/A	RV	RV	1-SI-0-911	
2-RFV-67-1044	SD BD ROOM A/C CHLR B-B ERCW RELIEF	0-47W845-2 / B-3	C	ACT	3	0.75	TRV	SA	C	O/C	N/A	RV	RV	1-SI-0-911	

Appendix B - Valve Test Plan

VALVE ID	FUNCTION	DRAWING/COOR	CAT	ACT/ PASS	CLASS	SIZE	TYPE	ACT	POSITION			TEST REQ	FREQ	PROCEDURE	NOTES
									NORM	SAFE	FAIL				
2-CKV-67-1054A	2-FCV-67-89 BYPASS CHECK	2-47W845-3 / H-7	A/C	ACT	2	0.5	CK	SA	C	O/C	N/A	LTJ CM	AppJ CM		
2-CKV-67-1054B	2-FCV-67-105 BYPASS CHECK	2-47W845-3 / E-7	A/C	ACT	2	0.5	CK	SA	C	O/C	N/A	LTJ CM	AppJ CM		
2-CKV-67-1054C	2-FCV-67-97 BYPASS CHECK	2-47W845-3 / G-7	A/C	ACT	2	0.5	CK	SA	C	O/C	N/A	LTJ CM	AppJ CM		
2-CKV-67-1054D	2-FCV-67-113 BYPASS CHECK	2-47W845-3 / D-7	A/C	ACT	2	0.5	CK	SA	C	O/C	N/A	LTJ CM	AppJ CM		
2-FCV-68-22	REACTOR VESSEL FLANGE LEAKOFF	2-47W813-1 / B-8	B	PASS	2	0.375	GL	AO	O	O	O	RPI	2Y		
2-FCV-68-305	PRESSURIZER RELIEF TANK NITROGEN SUP FLOW CNTL	0-47W830-6 / G-7	A	ACT	2	0.75	GL	AO	O	C	C	RPI LTJ FSC STC	2Y AppJ Q Q		
2-FCV-68-307	PRESSURIZER RELIEF TANK GAS ANALYZER SUPPLY	0-47W625-8 / B-7	A	ACT	2	0.375	GL	AO	O	C	C	RPI LTJ FSC STC	2Y AppJ Q Q		

Appendix B - Valve Test Plan

VALVE ID	FUNCTION	DRAWING/COOR	CAT	ACT/ PASS	CLASS	SIZE	TYPE	ACT	POSITION			TEST REQ	FREQ	PROCEDURE	NOTES
									NORM	SAFE	FAIL				
2-FCV-68-308	PRESSURIZER RELIEF TANK GAS ANALYZER SUPPLY	0-47W625-8 / B-5	A	ACT	2	0.375	GL	AO	O	C	C	RPI LTJ FSC STC	2Y AppJ Q Q		
2-FCV-68-332	PRESSURIZER PORV BLOCK VALVE	2-47W813-1 / B-2	B	ACT	1	3	GA	MO	O	O/C	FAI	RPI STC STO	2Y Q Q		
2-FCV-68-333	PRESSURIZER PORV BLOCK VALVE	2-47W813-1 / B-2	B	ACT	1	3	GA	MO	O	O/C	FAI	RPI STC STO	2Y Q Q		
2-PCV-68-334	PRESSURIZER PORV	2-47W813-1 / B-1	B	ACT	1	3	GL	SO	C	O/C	C	RPI FSC STC STO	2Y RO RO RO		
2-PCV-68-340A	PRESSURIZER PORV	2-47W813-1 / B-1	B	ACT	1	3	GL	SO	C	O/C	C	RPI FSC STC STO	2Y RO RO RO		

Appendix B - Valve Test Plan

VALVE ID	FUNCTION	DRAWING/COOR	CAT	ACT/ PASS	CLASS	SIZE	TYPE	ACT	POSITION			TEST REQ	FREQ	PROCEDURE	NOTES
									NORM	SAFE	FAIL				
2-FSV-68-394	REACTOR VESSEL HEAD VENT	2-47W813-1 / F-7	B	ACT	2	1	GL	SO	C	O/C	C	RPI	2Y		
												FSC	CSD		DTJ-26
												STC	CSD		DTJ-26
												STO	CSD		DTJ-26
2-FSV-68-395	REACTOR VESSEL HEAD VENT	2-47W813-1 / F-7	B	ACT	2	1	GL	SO	C	O/C	C	RPI	2Y		
												FSC	CSD		DTJ-26
												STC	CSD		DTJ-26
												STO	CSD		DTJ-26
2-FSV-68-396	REACTOR VESSEL HEAD VENT	2-47W813-1 / F-5	B	ACT	2	1	GL	SO	C	O/C	C	RPI	2Y		
												ET	CSD		IST-RR-3
												FSC	CSD		IST-RR-3
												RRA	RO		IST-RR-3
2-FSV-68-397	REACTOR VESSEL HEAD VENT	2-47W813-1 / F-6	B	ACT	2	1	GL	SO	C	O/C	C	RPI	2Y		
												ET	CSD		IST-RR-3
												FSC	CSD		IST-RR-3
												RRA	RO		IST-RR-3
2-CKV-68-559	SAFETY INJ SYS RELIEF DISCH CHECK	2-47W813-1 / H-3	C	ACT	2	4	CK	SA	C	O/C	N/A	CM	CM		
2-RFV-68-563	PRESSURIZER SAFETY VALVE	2-47W813-1 / A-2	C	ACT	1	6	RV	SA	C	O/C	N/A	RV	RV		IST-RR-4, IST-RR-5
2-RFV-68-564	PRESSURIZER SAFETY VALVE	2-47W813-1 / A-2	C	ACT	1	6	RV	SA	C	O/C	N/A	RV	RV		IST-RR-4, IST-RR-5
2-RFV-68-565	PRESSURIZER SAFETY VALVE	2-47W813-1 / A-2	C	ACT	1	6	RV	SA	C	O/C	N/A	RV	RV		IST-RR-4, IST-RR-5

Appendix B - Valve Test Plan

VALVE ID	FUNCTION	DRAWING/COOR	CAT	ACT/ PASS	CLASS	SIZE	TYPE	ACT	POSITION			TEST REQ	FREQ	PROCEDURE	NOTES
									NORM	SAFE	FAIL				
2-DRV-68-566	PRESSURIZER SAFETY VLV RFV-68-563 LOOP SEAL DR	2-47W813-1 / A-3	B	PASS	2	0.75	GL	M	LO	O	N/A	NTR	NTR		
2-DRV-68-567	PRESSURIZER SAFETY VLV RFV-68-564 LOOP SEAL DR	2-47W813-1 / A-2	B	PASS	2	0.75	GL	M	LO	O	N/A	NTR	NTR		
2-DRV-68-568	PRESSURIZER SAFETY VLV RFV-68-565 LOOP SEAL DR	2-47W813-1 / A-2	B	PASS	2	0.75	GL	M	LO	O	N/A	NTR	NTR		
2-CKV-68-849	PRESSURIZER RELIEF TANK N2 SUP HDR CHECK	0-47W830-6A / G-8	A/C	ACT	2	1	CK	SA	O	C	N/A	LTJ BDO CVC	AppJ CSD CSD		 DTJ-28 DTJ-28
2-LCV-70-63	CCS SURGE TANK B MAKEUP	0-47W859-1 / F-1	B	ACT	3	3	GL	AO	C	O	C	RPI FSC STO	2Y Q Q		
2-FCV-70-66	UNIT 2 CCS SURGE TANK VENT	0-47W859-1 / E-3	B	ACT	3	2	ANG	AO	O	C	C	RPI FSC STC	2Y Q Q	 1-SI-70-904-A 1-SI-70-908-A 1-SI-70-904-A 1-SI-70-908-A	
2-FCV-70-85	EXCESS LETDOWN HX CCS OUTLET	2-47W859-3 / D-10	A	ACT	2	6	BF	AO	C	C	C	RPI LTJ FSC STC	2Y AppJ Q Q		
2-FCV-70-87	THERMAL BARRIER CCS RETURN	2-47W859-3 / H-9	A	ACT	2	3	GA	MO	O	C	FAI	RPI LTJ STC	2Y AppJ RO		 DTJ-31

Appendix B - Valve Test Plan

VALVE ID	FUNCTION	DRAWING/COOR	CAT	ACT/ PASS	CLASS	SIZE	TYPE	ACT	POSITION			TEST REQ	FREQ	PROCEDURE	NOTES
									NORM	SAFE	FAIL				
2-FCV-70-89	RCP OIL COOLER CCS RET HDR	2-47W859-3 / E-9	A	ACT	2	6	BF	MO	O	C	FAI	RPI LTJ STC	2Y AppJ RO		DTJ-31
2-FCV-70-90	THERMAL BARRIER CCS RETURN	2-47W859-3 / F-10	A	ACT	2	3	GA	MO	O	C	FAI	RPI LTJ STC	2Y AppJ RO		DTJ-31
2-FCV-70-92	RCP OIL COOLER CCS RETURN	2-47W859-3 / E-10	A	ACT	2	6	BF	MO	O	C	FAI	RPI LTJ STC	2Y AppJ RO		DTJ-31
2-FCV-70-100	RCP OIL COOLERS CCS SUPPLY	2-47W859-3 / G-4	A	ACT	2	6	BF	MO	O	C	FAI	RPI LTJ STC	2Y AppJ RO		DTJ-31
2-FCV-70-133	THERMAL BARRIER CCS SUPPLY	2-47W859-3 / H-3	B	ACT	3	3	GA	MO	O	C	FAI	RPI STC	2Y RO		DTJ-31
2-FCV-70-134	THERMAL BARRIER CCS SUPPLY	2-47W859-3 / H-3	A	ACT	2	3	GA	MO	O	C	FAI	RPI LTJ STC	2Y AppJ RO		DTJ-31
2-FCV-70-140	RCP OIL COOLER CCS SUPPLY	2-47W859-3 / G-3	A	ACT	2	6	BF	MO	O	C	FAI	RPI LTJ STC	2Y AppJ RO		DTJ-31
2-FCV-70-143	EXCESS LETDOWN HX CCS SUPPLY	2-47W859-3 / E-3	A	ACT	2	6	BF	MO	O	C	FAI	RPI LTJ STC	2Y AppJ Q		

Appendix B - Valve Test Plan

VALVE ID	FUNCTION	DRAWING/COOR	CAT	ACT/ PASS	CLASS	SIZE	TYPE	ACT	POSITION			TEST REQ	FREQ	PROCEDURE	NOTES
									NORM	SAFE	FAIL				
2-FCV-70-153	RHR HEAT EXCHANGER 2B CCS OUTLET	0-47W859-4 / F-8	B	ACT	3	18	BF	MO	O/C	O/C	FAI	RPI STC STO	2Y Q Q	1-SI-70-908-B 1-SI-70-904-B 1-SI-70-908-B 1-SI-70-904-B 1-SI-70-908-B	
2-FCV-70-156	RHR HEAT EXCHANGER 2A CCS OUTLET	0-47W859-4 / F-10	B	ACT	3	18	BF	MO	C	O/C	FAI	RPI STC STO	2Y Q Q		
2-FCV-70-183	SAMPLE HEAT EXCHANGER CCS OUTLET	2-47W859-3 / C-9	B	ACT	3	3	GA	MO	O	C	FAI	RPI STC	2Y Q		
2-FCV-70-215	SAMPLE HEAT EXCHANGER CCS INLET	2-47W859-3 / A-8	B	ACT	3	3	GA	MO	O	C	FAI	RPI STC	2Y Q		
2-CKV-70-504A	CCS PUMP 2A-A DISCHARGE CHECK	0-47W859-1 / F-7	C	ACT	3	16	CK	SA	O/C	O/C	N/A	CVC CVO	Q Q		
2-CKV-70-504B	CCS PUMP 2B-B DISCHARGE CHECK	0-47W859-1 / E-7	C	ACT	3	16	CK	SA	O/C	O/C	N/A	CVC CVO	Q Q	2-SI-70-901-A 2-SI-70-901-B 2-SI-70-901-A	
2-RFV-70-521	WASTE GAS COMPR B HX CCS OUTLET RELIEF	0-47W859-1 / A-1	C	ACT	3	0.75	TRV	SA	C	O/C	N/A	RV	RV	1-SI-0-911	
2-CKV-70-535	CCS SEAL LEAKAGE RETURN PUMP B DISCH CHECK	0-47W859-1 / G-7	C	ACT	3	1.5	CK	SA	O/C	C	N/A	BDO CVC	Q Q		
2-ISV-70-536	CCS SEAL LEAKAGE RETURN PUMP B DISCH ISOL	0-47W859-1 / G-7	B	PASS	3	1.5	GL	M	C	C	N/A	NTR	NTR		
2-RFV-70-538	UNIT 2 CCS SURGE TANK RELIEF	0-47W859-1 / E-1	C	ACT	3	3	RV	SA	C	O/C	N/A	RV	RV		
2-RFV-70-539	UNIT 2 CCS SURGE TANK RELIEF	0-47W859-1 / E-1	C	ACT	3	3	RV	SA	C	O/C	N/A	RV	RV		DTJ-29

Appendix B - Valve Test Plan

VALVE ID	FUNCTION	DRAWING/COOR	CAT	ACT/ PASS	CLASS	SIZE	TYPE	ACT	POSITION			TEST REQ	FREQ	PROCEDURE	NOTES
									NORM	SAFE	FAIL				
2-CKV-70-541	UNIT 2 CCS SURGE TANK DEMIN WATER MAKEUP CKV	0-47W859-1 / F-1	C	ACT	3	3	CK	SA	O/C	C	N/A	CM	CM		
2-ISV-70-542	ERCW FLOOD MODE UNIT 2 SURGE TANK SUP	0-47W859-1 / F-1	B	ACT	3	3	GA	M	C	O	N/A	MS	2Y		
2-RFV-70-551A	RHR HEAT EXCHANGER 2A-A CCS OUTLET RELIEF	0-47W859-4 / E-11	C	ACT	3	1.5	RV	SA	C	O/C	N/A	RV	RV	1-SI-0-911	
2-RFV-70-551B	RHR HEAT EXCHANGER 2B-B CCS OUTLET RELIEF	0-47W859-4 / E-8	C	ACT	3	1.5	RV	SA	C	O/C	N/A	RV	RV		
2-RFV-70-556A	CCP 2A-A OIL COOLER CCS OUTLET RELIEF	0-47W859-4 / H-11	C	ACT	3	0.75	RV	SA	C	O/C	N/A	RV	RV	1-SI-0-911	
2-RFV-70-556B	CCP 2B-B OIL COOLERS CCS OUTLET RELIEF	0-47W859-4 / A-8	C	ACT	3	0.75	RV	SA	C	O/C	N/A	RV	RV		
2-RFV-70-561A	SI PUMP 2A-A LUBE OIL COOLER CCS OUT RELIEF	0-47W859-4 / B-10	C	ACT	3	0.75	TRV	SA	C	O/C	N/A	RV	RV		
2-RFV-70-561B	SI PUMP 2B-B LUBE OIL COOLER CCS OUT RELIEF	0-47W859-4 / B-8	C	ACT	3	0.75	TRV	SA	C	O/C	N/A	RV	RV		
2-RFV-70-565A	RHR PMP 2A-A SEAL WATER HX CCS OUTLET RELIEF	0-47W859-4 / C-10	C	ACT	3	0.75	RV	SA	C	O/C	N/A	RV	RV		
2-RFV-70-565B	RHR PMP 2B-B SEAL WATER HX CCS OUTLET RELIEF	0-47W859-4 / C-8	C	ACT	3	0.75	RV	SA	C	O/C	N/A	RV	RV		
2-RFV-70-570A	CS PUMP 2A-A OIL HX CCS OUTLET RELIEF	0-47W859-4 / D-10	C	ACT	3	0.75	TRV	SA	C	O/C	N/A	RV	RV		
2-RFV-70-570B	CS PUMP 2B-B OIL HX CCS OUTLET RELIEF	0-47W859-4 / D-8	C	ACT	3	0.75	TRV	SA	C	O/C	N/A	RV	RV		
2-RFV-70-578	CVCS LETDOWN HX 2A CCS OUTLET RELIEF	2-47W859-3 / A-7	C	ACT	3	0.75	RV	SA	C	O/C	N/A	RV	RV		
2-RFV-70-584	CVCS SEAL WATER HX 2A CCS OUTLET RELIEF	2-47W859-3 / B-6	C	ACT	3	0.75	TRV	SA	C	O/C	N/A	RV	RV		

Appendix B - Valve Test Plan

VALVE ID	FUNCTION	DRAWING/COOR	CAT	ACT/ PASS	CLASS	SIZE	TYPE	ACT	POSITION			TEST REQ	FREQ	PROCEDURE	NOTES
									NORM	SAFE	FAIL				
2-CKV-70-679	RCP THERMAL BARRIER CCS SUP HDR CHECK	2-47W859-3 / H-4	A/C	ACT	2	3	CK	SA	O	C	N/A	LTJ BDO CVC	AppJ RO RO		 DTJ-31 DTJ-31
2-CKV-70-681A	RCP 1 THERMAL BARRIER CCS SUPPLY CHECK	2-47W859-3 / G-8	C	ACT	3	2	CK	SA	O	C	N/A	CM	CM		
2-CKV-70-681B	RCP 2 THERMAL BARRIER CCS SUPPLY CHECK	2-47W859-3 / F-8	C	ACT	3	2	CK	SA	O	C	N/A	CM	CM		
2-CKV-70-681C	RCP 3 THERMAL BARRIER CCS SUPPLY CHECK	2-47W859-3 / F-8	C	ACT	3	2	CK	SA	O	C	N/A	CM	CM		
2-CKV-70-681D	RCP 4 THERMAL BARRIER CCS SUPPLY CHECK	2-47W859-3 / H-8	C	ACT	3	2	CK	SA	O	C	N/A	CM	CM		
2-CKV-70-682A	RCP 1 THERMAL BARRIER CCS SUPPLY CHECK	2-47W859-3 / G-8	C	ACT	3	2	CK	SA	O	C	N/A	CM	CM		
2-CKV-70-682B	RCP 2 THERMAL BARRIER CCS SUPPLY CHECK	2-47W859-3 / F-8	C	ACT	3	2	CK	SA	O	C	N/A	CM	CM		
2-CKV-70-682C	RCP 3 THERMAL BARRIER CCS SUPPLY CHECK	2-47W859-3 / E-8	C	ACT	3	2	CK	SA	O	C	N/A	CM	CM		
2-CKV-70-682D	RCP 4 THERMAL BARRIER CCS SUPPLY CHECK	2-47W859-3 / H-8	C	ACT	3	2	CK	SA	O	C	N/A	CM	CM		
2-RFV-70-683A	RCP 1 THERMAL BARRIER CCS RETURN RELIEF	2-47W859-3 / G-8	C	ACT	3	0.75	TRV	SA	C	O/C	N/A	RV	RV		
2-RFV-70-683B	RCP 2 THERMAL BARRIER CCS RETURN RELIEF	2-47W859-3 / F-8	C	ACT	3	0.75	TRV	SA	C	O/C	N/A	RV	RV		
2-RFV-70-683C	RCP 3 THERMAL BARRIER CCS RETURN RELIEF	2-47W859-3 / E-8	C	ACT	3	0.75	TRV	SA	C	O/C	N/A	RV	RV		
2-RFV-70-683D	RCP 4 THERMAL BARRIER CCS RETURN RELIEF	2-47W859-3 / H-8	C	ACT	3	0.75	TRV	SA	C	O/C	N/A	RV	RV		

Appendix B - Valve Test Plan

VALVE ID	FUNCTION	DRAWING/COOR	CAT	ACT/ PASS	CLASS	SIZE	TYPE	ACT	POSITION			TEST REQ	FREQ	PROCEDURE	NOTES
									NORM	SAFE	FAIL				
2-CKV-70-687	2-FCV-70-87 BYPASS CHECK	2-47W859-3 / H-9	A/C	ACT	2	0.75	CK	SA	C	O/C	N/A	LTJ CM	AppJ CM		
2-RFV-70-694	RCP OIL COOLER CCS SUPPLY RELIEF	2-47W859-3 / F-4	C	ACT	3	0.75	TRV	SA	C	O/C	N/A	RV	RV		
2-CKV-70-698	2-FCV-70-89 BYPASS CHECK	2-47W859-3 / E-9	A/C	ACT	2	0.75	CK	SA	C	O/C	N/A	LTJ CM	AppJ CM		
2-RFV-70-703	EXCESS LETDOWN HX CCS OUT RELIEF	2-47W859-3 / E-5	A/C	ACT	2	3	RV	SA	C	O/C	N/A	LTJ RV	AppJ RV		
2-CKV-70-790	RCP OIL CLR HDR SUP BYPASS CHECK	2-47W859-3 / G-4	A/C	ACT	2	0.75	CK	SA	C	O/C	N/A	LTJ CM	AppJ CM		
2-RFV-70-835	RCP THERMAL BARRIER CCS SUP HDR RLF	2-47W859-3 / H-4	C	ACT	3	0.75	RV	SA	C	O/C	N/A	RV	RV		
2-FCV-72-2	CNTMT SPRAY HDR B ISOLATION	2-47W812-1 / A-3	A	ACT	2	10	GA	MO	C	O/C	FAI	RPI LT STC STO	2Y AppJ Q Q		CLOC LT
2-FCV-72-13	CNTMT SPRAY PUMP 2B-B MINIFLOW	2-47W812-1 / B-6	B	ACT	2	2	GL	MO	C	O/C	FAI	RPI STC STO	2Y Q Q		
2-FCV-72-21	RWST TO CNTMT SPRAY PUMP 2B-B SUCTION	2-47W812-1 / B-10	B	ACT	2	12	GA	MO	O	O/C	FAI	RPI STC STO	2Y Q Q		

Appendix B - Valve Test Plan

VALVE ID	FUNCTION	DRAWING/COOR	CAT	ACT/ PASS	CLASS	SIZE	TYPE	ACT	POSITION			TEST REQ	FREQ	PROCEDURE	NOTES
									NORM	SAFE	FAIL				
2-FCV-72-22	RWST TO CNTMT SPRAY PUMP 2A-A SUCTION	2-47W812-1 / C-10	B	ACT	2	12	GA	MO	O	O/C	FAI	RPI	2Y		
												STC	Q		
												STO	Q		
2-FCV-72-34	CNTMT SPRAY PMP 2A-A MINIFLOW	2-47W812-1 / C-6	B	ACT	2	2	GL	MO	C	O/C	FAI	RPI	2Y		
												STC	Q		
												STO	Q		
2-FCV-72-39	CNTMT SPRAY HDR A ISOLATION	2-47W812-1 / D-3	A	ACT	2	10	GA	MO	C	O/C	FAI	RPI	2Y		
												LT	AppJ		CLOC LT
												STC	Q		
												STO	Q		
2-RFV-72-40	2-FCV-72-40 BONNET PRESS RELIEF	2-47W812-1 / F-3	A/C	ACT	2	0.75	TRV	SA	C	O/C	N/A	LT	AppJ		CLOC LT
												RV	RV		
2-FCV-72-40	RHR SPRAY HDR A ISOLATION	2-47W812-1 / F-4	A	ACT	2	8	GA	MO	C	O/C	FAI	RPI	2Y		
												LT	AppJ		CLOC LT
												STC	RO		DTJ-04
												STO	RO		DTJ-04
2-RFV-72-41	2-FCV-72-41 BONNET PRESS RELIEF	2-47W812-1 / E-3	A/C	ACT	2	0.75	TRV	SA	C	O/C	N/A	LT	AppJ		CLOC LT
												RV	RV		
2-FCV-72-41	RHR SPRAY HDR B ISOLATION	2-47W812-1 / E-4	A	ACT	2	8	GA	MO	C	O/C	FAI	RPI	2Y		
												LT	AppJ		CLOC LT
												STC	RO		DTJ-04
												STO	RO		DTJ-04

Appendix B - Valve Test Plan

VALVE ID	FUNCTION	DRAWING/COOR	CAT	ACT/ PASS	CLASS	SIZE	TYPE	ACT	POSITION			TEST REQ	FREQ	PROCEDURE	NOTES
									NORM	SAFE	FAIL				
2-FCV-72-44	CNTMT SUMP TO CS PUMP 2A-A SUCTION	2-47W812-1 / G-3	B	ACT	2	12	GA	MO	C	O/C	FAI	RPI STC STO	2Y RO RO		 DTJ-24 DTJ-24
2-FCV-72-45	CNTMT SUMP TO CS PUMP 2B-B SUCTION	2-47W812-1 / H-3	B	ACT	2	12	GA	MO	C	O/C	FAI	RPI STC STO	2Y RO RO		 DTJ-24 DTJ-24
2-CKV-72-506	CNTMT SPRAY PMP 2A-A SUCTION CHECK	2-47W812-1 / C-10	C	ACT	2	12	CK	SA	C	O/C	N/A	CVC CVO	Q Q		
2-CKV-72-507	CNTMT SPRAY PMP 2B-B SUCTION CHECK	2-47W812-1 / B-10	C	ACT	2	12	CK	SA	C	O/C	N/A	CVC CVO	Q Q		
2-RFV-72-508	CNTMT SPRAY PMP 2A-A SUCTION RELIEF	2-47W812-1 / C-9	C	ACT	2	0.75	RV	SA	C	O/C	N/A	RV	RV		
2-RFV-72-509	CNTMT SPRAY PMP 2B-B SUCTION RELIEF	2-47W812-1 / A-9	C	ACT	2	0.75	RV	SA	C	O/C	N/A	RV	RV		
2-CKV-72-524	CNTMT SPRAY PMP 2A-A DISCH CHECK	2-47W812-1 / D-6	C	ACT	2	10	CK	SA	C	O	N/A	BDC CVO	Q Q		
2-CKV-72-525	CNTMT SPRAY PMP 2B-B DISCH CHECK	2-47W812-1 / A-6	C	ACT	2	10	CK	SA	C	O	N/A	BDC CVO	Q Q		
2-CKV-72-548	CNTMT SPRAY HDR A CNTMT CHECK VALVE	2-47W812-1 / D-2	C	ACT	2	10	CK	SA	C	O/C	N/A	CM	CM		
2-CKV-72-549	CNTMT SPRAY HDR B CNTMT CHECK VALVE	2-47W812-1 / A-2	C	ACT	2	10	CK	SA	C	O/C	N/A	CM	CM		
2-CKV-72-562	RHR SPRAY HDR A CNTMT CHECK VALVE	2-47W812-1 / F-2	C	ACT	2	8	CK	SA	C	O/C	N/A	CM	CM		
2-CKV-72-563	RHR SPRAY HDR B CNTMT CHECK VALVE	2-47W812-1 / E-2	C	ACT	2	8	CK	SA	C	O/C	N/A	CM	CM		

Appendix B - Valve Test Plan

VALVE ID	FUNCTION	DRAWING/COOR	CAT	ACT/ PASS	CLASS	SIZE	TYPE	ACT	POSITION			TEST REQ	FREQ	PROCEDURE	NOTES
									NORM	SAFE	FAIL				
2-FCV-74-1	LOOP 4 HOT LEG TO RHR SUCTION	2-47W810-1 / G-2	A	ACT	1	14	GA	MO	LC	O/C	FAI	LTP	2Y		PIV
												RPI	2Y		
												STC	CSD		DTJ-17
												STO	CSD		DTJ-17
2-FCV-74-2	LOOP 4 HOT LEG TO RHR SUCTION	2-47W810-1 / G-3	A	ACT	1	14	GA	MO	LC	O/C	FAI	LTP	2Y		PIV
												RPI	2Y		
												STC	CSD		DTJ-17
												STO	CSD		DTJ-17
2-FCV-74-3	RHR PUMP 2A-A SUCTION	2-47W810-1 / F-9	B	ACT	2	14	GA	MO	O	O/C	FAI	RPI	2Y		
												STC	Q		
												STO	Q		
2-FCV-74-8	2-FCV-74-2 BYPASS RHR SUCTION	2-47W810-1 / H-3	A	ACT	1	10	GA	MO	LC	O/C	FAI	LTP	2Y		PIV
												RPI	2Y		
												STC	CSD		DTJ-17
												STO	CSD		DTJ-17
2-FCV-74-9	2-FCV-74-1 BYPASS RHR SUCTION	2-47W810-1 / G-2	A	ACT	1	10	GA	MO	LC	O/C	FAI	LTP	2Y		PIV
												RPI	2Y		
												STC	CSD		DTJ-17
												STO	CSD		DTJ-17
2-FCV-74-12	RHR PUMP 2A-A MINIMUM FLOW	2-47W810-1 / G-7	B	ACT	2	3	GL	MO	O	O/C	FAI	RPI	2Y		
												STC	Q		
												STO	Q		
2-FCV-74-16	RHR HEAT EX A OUTLET FLOW CONTROL VLV	2-47W810-1 / F-4	B	PASS	2	8	DIA	AO	O	O	N/A	RPI	2Y		

Appendix B - Valve Test Plan

VALVE ID	FUNCTION	DRAWING/COOR	CAT	ACT/ PASS	CLASS	SIZE	TYPE	ACT	POSITION			TEST REQ	FREQ	PROCEDURE	NOTES
									NORM	SAFE	FAIL				
2-FCV-74-21	RHR PUMP 2B-B SUCTION	2-47W810-1 / C-9	B	ACT	2	14	GA	MO	O	O/C	FAI	RPI STC STO	2Y Q Q		
2-FCV-74-24	RHR PUMP 2B-B MINIMUM FLOW	2-47W810-1 / B-6	B	ACT	2	3	GL	MO	O	O/C	FAI	RPI STC STO	2Y Q Q		
2-FCV-74-28	RHR HEAT EX B OUTLET FLOW CONTROL VLV	2-47W810-1 / C-4	B	PASS	2	8	DIA	AO	O	O	N/A	RPI	2Y		
2-FCV-74-33	RHR HEAT EXCHANGER 2A OUTLET CROSSTIE	2-47W810-1 / E-4	B	ACT	2	8	GA	MO	O	O/C	FAI	RPI STC STO	2Y CSD CSD		 DTJ-25 DTJ-25
2-FCV-74-35	RHR HEAT EXCHANGER 2B OUTLET CROSSTIE	2-47W810-1 / C-4	B	ACT	2	8	GA	MO	O	O/C	FAI	RPI STC STO	2Y CSD CSD		 DTJ-25 DTJ-25
2-RFV-74-505	RHR PUMP SUCTION HDR RELIEF	2-47W810-1 / H-3	C	ACT	2	3	RV	SA	C	O/C	N/A	RV	RV		
2-CKV-74-514	RHR PUMP 2A-A DISCHARGE CHECK	2-47W810-1 / F-8	C	ACT	2	8	CK	SA	C	O/C	N/A	CVC CVO	RO RO		DTJ-18 DTJ-18
2-CKV-74-515	RHR PUMP 2B-B DISCHARGE CHECK	2-47W810-1 / C-8	C	ACT	2	8	CK	SA	C	O/C	N/A	CVC CVO	RO RO		DTJ-18 DTJ-18
2-CKV-74-544	RHR HEADER 2A MINIMUM FLOW CHECK	2-47W810-1 / F-5	C	ACT	2	8	CK	SA	C	O/C	N/A	CVC CVO	RO RO		DTJ-30 DTJ-30

Appendix B - Valve Test Plan

VALVE ID	FUNCTION	DRAWING/COOR	CAT	ACT/ PASS	CLASS	SIZE	TYPE	ACT	POSITION			TEST REQ	FREQ	PROCEDURE	NOTES
									NORM	SAFE	FAIL				
2-CKV-74-545	RHR HEADER 2B MINIMUM FLOW CHECK	2-47W810-1 / C-5	C	ACT	2	8	CK	SA	C	O/C	N/A	CVC CVO	RO RO		DTJ-30 DTJ-30
2-FCV-77-9	RCDT PUMP DISCHARGE FLOW CONTROL	0-47W830-1A / D-1	A	ACT	2	3	DIA	AO	O	C	C	RPI LTJ FSC STC	2Y AppJ Q Q		
2-FCV-77-10	RCDT PUMP DISCHARGE FLOW CONTROL	0-47W830-1A / E-1	A	ACT	2	3	DIA	AO	O	C	C	RPI LTJ FSC STC	2Y AppJ Q Q		
2-FCV-77-16	RCDT TO GAS ANALYZER FLOW CONTROL	0-47W830-1A / B-5	A	ACT	2	0.75	DIA	AO	O	C	C	RPI LTJ FSC STC	2Y AppJ Q Q		
2-FCV-77-17	RCDT TO GAS ANALYZER FLOW CONTROL	0-47W830-1A / B-6	A	ACT	2	0.75	DIA	AO	O	C	C	RPI LTJ FSC STC	2Y AppJ Q Q		
2-FCV-77-18	RCDT TO VENT HDR FLOW CONTROL	0-47W830-1A / B-5	A	ACT	2	1	DIA	AO	O	C	C	RPI LTJ FSC STC	2Y AppJ Q Q		

Appendix B - Valve Test Plan

VALVE ID	FUNCTION	DRAWING/COOR	CAT	ACT/ PASS	CLASS	SIZE	TYPE	ACT	POSITION			TEST REQ	FREQ	PROCEDURE	NOTES
									NORM	SAFE	FAIL				
2-FCV-77-19	RCDT TO VENT HDR FLOW CONTROL	0-47W830-1A / B-6	A	ACT	2	1	DIA	AO	O	C	C	RPI LTJ FSC STC	2Y AppJ Q Q		
2-FCV-77-20	RCDT N2 SUPPLY FLOW CONTROL	0-47W830-1A / C-6	A	ACT	2	1	DIA	AO	O	C	C	RPI LTJ FSC STC	2Y AppJ Q Q		
2-FCV-77-127	RB SUMP DISCHARGE FLOW CONTROL	2-47W851-1 / F-7	A	ACT	2	2	PLG	AO	O	C	C	RPI LTJ FSC STC	2Y AppJ Q Q		
2-FCV-77-128	RB SUMP DISCHARGE FLOW CONTROL	2-47W851-1 / F-8	A	ACT	2	2	PLG	AO	O	C	C	RPI LTJ FSC STC	2Y AppJ Q Q		
2-RFV-77-2875	RB SUMP DISCH RLF	2-47W851-1 / F-7	A/C	ACT	2	2	TRV	SA	C	O/C	N/A	LTJ RV	AppJ RV		
2-ISV-78-557	UNIT 2 REFLG CAVITY SUP HDR ISOL	0-47W855-1 / G-4	A	PASS	2	4	DIA	M	LC	C	N/A	LTJ	AppJ		
2-ISV-78-558	UNIT 2 REFLG CAVITY SUP HDR ISOL	0-47W855-1 / G-4	A	PASS	2	4	DIA	M	LC	C	N/A	LTJ	AppJ		
2-ISV-78-560	UNIT 2 REFLG CAVITY RETURN HDR ISOL	0-47W855-1 / G-4	A	PASS	2	6	DIA	M	LC	C	N/A	LTJ	AppJ		
2-ISV-78-561	UNIT 2 REFLG CAVITY RETURN HDR ISOL	0-47W855-1 / G-4	A	PASS	2	6	DIA	M	LC	C	N/A	LTJ	AppJ		

Appendix B - Valve Test Plan

VALVE ID	FUNCTION	DRAWING/COOR	CAT	ACT/ PASS	CLASS	SIZE	TYPE	ACT	POSITION			TEST REQ	FREQ	PROCEDURE	NOTES
									NORM	SAFE	FAIL				
2-FCV-81-12	PRIMARY WATER TO PRT AND RCP STANDPIPES	0-47W819-1 / B-4	A	ACT	2	3	DIA	AO	O	C	C	RPI LTJ FSC STC	2Y AppJ Q Q		
2-CKV-81-502	PRIMARY WATER CNTMT HDR CHECK VLV	0-47W819-1 / B-4	A/C	ACT	2	3	CK	SA	O	C	N/A	LTJ CM	AppJ CM		
2-RFV-82-511A1	DG ENG 2A1 START AIR RCVR A RELIEF	2-47W839-1B / C-3	C	ACT	3	0.75	RV	SA	C	O/C	N/A	RV	RV		Class C*
2-RFV-82-511B1	DG ENG 2B1 START AIR RCVR A RELIEF	2-47W839-1C / B-3	C	ACT	3	0.75	RV	SA	C	O/C	N/A	RV	RV		Class C*
2-RFV-82-513A1	DG ENG 2A1 START AIR RCVR B RELIEF	2-47W839-1B / B-3	C	ACT	3	0.75	RV	SA	C	O/C	N/A	RV	RV		Class C*
2-RFV-82-513B1	DG ENG 2B1 START AIR RCVR B RELIEF	2-47W839-1C / B-3	C	ACT	3	0.75	RV	SA	C	O/C	N/A	RV	RV		Class C*
2-RFV-82-545A2	DG ENG 2A2 START AIR RCVR A RELIEF	2-47W839-1B / C-10	C	ACT	3	0.75	RV	SA	C	O/C	N/A	RV	RV		Class C*
2-RFV-82-545B2	DG ENG 2B2 START AIR RCVR A RELIEF	2-47W839-1C / D-10	C	ACT	3	0.75	RV	SA	C	O/C	N/A	RV	RV		Class C*
2-RFV-82-547A2	DG ENG 2A2 START AIR RCVR B RELIEF	2-47W839-1B / B-10	C	ACT	3	0.75	RV	SA	C	O/C	N/A	RV	RV		Class C*
2-RFV-82-547B2	DG ENG 2B2 START AIR RCVR B RELIEF	2-47W839-1C / B-10	C	ACT	3	0.75	RV	SA	C	O/C	N/A	RV	RV		Class C*
2-ISV-84-530	RCDT PMPS DISCH ISOL TO FLOOD MODE AUX BORATION	0-47W809-7 / F-3	A	PASS	2	1	GL	M	LC	C	N/A	LTJ	AppJ		

Appendix B - Valve Test Plan

VALVE ID	FUNCTION	DRAWING/COOR	CAT	ACT/ PASS	CLASS	SIZE	TYPE	ACT	POSITION			TEST REQ	FREQ	PROCEDURE	NOTES
									NORM	SAFE	FAIL				
2-FCV-90-107	CNTMT BLDG LOWER COMPT AIR RAD MON SUPPLY	2-47W610-90-3 / B-8	A	ACT	2	1.5	GL	AO	O	C	C	RPI LTJ FSC STC	2Y AppJ Q Q		
2-FCV-90-108	CNTMT BLDG LOWER COMPT AIR RAD MON SUPPLY	2-47W610-90-3 / C-7	A	ACT	2	1.5	GL	AO	O	C	C	RPI LTJ FSC STC	2Y AppJ Q Q		
2-FCV-90-109	CNTMT BLDG LOWER COMPT AIR RAD MON SUPPLY	2-47W610-90-3 / C-7	A	ACT	2	1.5	GL	AO	O	C	C	RPI LTJ FSC STC	2Y AppJ Q Q		
2-FCV-90-110	CNTMT BLDG LOWER COMPT AIR RAD MON RETURN	2-47W610-90-3 / D-7	A	ACT	2	1.5	GL	AO	O	C	C	RPI LTJ FSC STC	2Y AppJ Q Q		

Appendix B - Valve Test Plan

VALVE ID	FUNCTION	DRAWING/COOR	CAT	ACT/ PASS	CLASS	SIZE	TYPE	ACT	POSITION			TEST REQ	FREQ	PROCEDURE	NOTES
									NORM	SAFE	FAIL				
2-FCV-90-111	CNTMT BLDG LOWER COMPT AIR RAD MON RETURN	2-47W610-90-3 / D-8	A	ACT	2	1.5	GL	AO	O	C	C	RPI LTJ FSC STC	2Y AppJ Q Q		
2-FCV-90-113	CNTMT BLDG UPPER COMPT AIR RAD MON SUPPLY	2-47W610-90-3 / D-3	A	ACT	2	1.5	GL	AO	O	C	C	RPI LTJ FSC STC	2Y AppJ Q Q		
2-FCV-90-114	CNTMT BLDG UPPER COMPT AIR RAD MON SUPPLY	2-47W610-90-3 / E-2	A	ACT	2	1.5	GL	AO	O	C	C	RPI LTJ FSC STC	2Y AppJ Q Q		
2-FCV-90-115	CNTMT BLDG UPPER COMPT AIR RAD MON SUPPLY	2-47W610-90-3 / E-2	A	ACT	2	1.5	GL	AO	O	C	C	RPI LTJ FSC STC	2Y AppJ Q Q		

Appendix B - Valve Test Plan

VALVE ID	FUNCTION	DRAWING/COOR	CAT	ACT/ PASS	CLASS	SIZE	TYPE	ACT	POSITION			TEST REQ	FREQ	PROCEDURE	NOTES
									NORM	SAFE	FAIL				
2-FCV-90-116	CNTMT BLDG UPPER COMPT AIR RAD MON RETURN	2-47W610-90-3 / E-2	A	ACT	2	1.5	GL	AO	O	C	C	RPI LTJ FSC STC	2Y AppJ Q Q		
2-FCV-90-117	CNTMT BLDG UPPER COMPT AIR RAD MON RETURN	2-47W610-90-3 / F-3	A	ACT	2	1.5	GL	AO	O	C	C	RPI LTJ FSC STC	2Y AppJ Q Q		

Appendix C - Pump Relief Requests
Page 1 of 8

IST-RR-1
Pump Vibration Reference Values and Acceptance Criteria

Proposed Alternative in Accordance with 10 CFR 50.55a(a)(3)(i)
Alternative Provides Acceptable Level of Quality and Safety

ASME Code Component(s) Affected

Pump ID	Pump Description	Pump Group	Pump Type
0-PMP-67-28-A	ESSENTIAL RAW COOLING WATER PUMP A-A	A	VLS
0-PMP-67-32-A	ESSENTIAL RAW COOLING WATER PUMP B-A	A	VLS
0-PMP-67-36-A	ESSENTIAL RAW COOLING WATER PUMP C-A	A	VLS
0-PMP-67-40-A	ESSENTIAL RAW COOLING WATER PUMP D-A	A	VLS
0-PMP-67-47-B	ESSENTIAL RAW COOLING WATER PUMP E-B	A	VLS
0-PMP-67-51-B	ESSENTIAL RAW COOLING WATER PUMP F-B	A	VLS
0-PMP-67-55-B	ESSENTIAL RAW COOLING WATER PUMP G-B	A	VLS
0-PMP-67-59-B	ESSENTIAL RAW COOLING WATER PUMP H-B	A	VLS
0-PMP-70-51-S	CCS PUMP C-S	A	C-H
1-PMP-3-1A-S	TD AUX FEEDWATER PUMP 1A-S	B	C-H
1-PMP-3-118-A	AUX FEEDWATER PMP 1A-A	A	C-H
1-PMP-3-128-B	AUX FEEDWATER PMP 1B-B	A	C-H
1-PMP-62-104-B	CENTRIFUGAL CHARGING PUMP 1B-B	A	C-H
1-PMP-62-108-A	CENTRIFUGAL CHARGING PUMP 1A-A	A	C-H
1-PMP-62-230-A	BORIC ACID TRANSFER PUMP 1A-A	A	C-H
1-PMP-62-232-B	BORIC ACID TRANSFER PUMP 1B-B	A	C-H
1-PMP-63-10-A	SAFETY INJECTION PUMP 1A-A	B	C-H
1-PMP-63-15-B	SAFETY INJECTION PUMP 1B-B	B	C-H
1-PMP-67-431-A	ERCW SCREEN WASH PUMP 1A-A	A	VLS
1-PMP-67-440-B	ERCW SCREEN WASH PUMP 1B-B	A	VLS
1-PMP-70-38-B	CCS PUMP 1B-B	A	C-H
1-PMP-70-46-A	CCS PUMP 1A-A	A	C-H
1-PMP-72-10-B	CONTAINMENT SPRAY PUMP 1B-B	B	C-H
1-PMP-72-27-A	CONTAINMENT SPRAY PUMP 1A-A	B	C-H
1-PMP-74-10-A	RHR PUMP 1A-A	A	C-V
1-PMP-74-20-B	RHR PUMP 1B-B	A	C-V
2-PMP-3-2A-S	TD AUX FEEDWATER PUMP 2A-S	B	C-H
2-PMP-3-118-A	AUX FEEDWATER PMP 2A-A	A	C-H
2-PMP-3-128-B	AUX FEEDWATER PMP 2B-B	A	C-H
2-PMP-62-104-B	CENTRIFUGAL CHARGING PUMP 2B-B	A	C-H
2-PMP-62-108-A	CENTRIFUGAL CHARGING PUMP 2A-A	A	C-H
2-PMP-62-230-A	BORIC ACID TRANSFER PUMP 2A-A	A	C-H
2-PMP-62-232-B	BORIC ACID TRANSFER PUMP 2B-B	A	C-H

IST-RR-1
Pump Vibration Reference Values and Acceptance Criteria

ASME Code Component(s) Affected (continued)

2-PMP-63-10-A	SAFETY INJECTION PUMP 2A-A	B	C-H
2-PMP-63-15-B	SAFETY INJECTION PUMP 2B-B	B	C-H
2-PMP-67-437-A	ERCW SCREEN WASH PUMP 2A-A	A	VLS
2-PMP-67-447-B	ERCW SCREEN WASH PUMP 2B-B	A	VLS
2-PMP-70-33-B	CCS PUMP 2B-B	A	C-H
2-PMP-70-59-A	CCS PUMP 2A-A	A	C-H
2-PMP-72-10-B	CONTAINMENT SPRAY PUMP 2B-B	B	C-H
2-PMP-72-27-A	CONTAINMENT SPRAY PUMP 2A-A	B	C-H
2-PMP-74-10-A	RHR PUMP 2A-A	A	C-V
2-PMP-74-20-B	RHR PUMP 2B-B	A	C-V

See Section 3.4 of this TI for additional information for pump group and type.
System 31 pumps previously located in the above table have been relocated to the Augmented IST Program in 0-TI-100.007.

Applicable Code Edition and Addenda

ASME OM Code, 2004 Edition through 2006 Addenda

Applicable Code Requirement

ISTB-3300 Reference Values
(a) Initial reference values shall be determined from the results of testing meeting the requirements of ISTB- 3100, Preservice Testing, or from the results of the first inservice test.

Reason for Request

Relief is being requested for establishing vibration reference value (V_r) solely on the basis of the data collected during preservice or inservice testing for those vibration points that have unusually low levels of vibration. This request applies only to values for V_r associated with vibration testing. Small values for V_r result in small acceptable ranges for pump operation. The acceptable range defined in Table ISTB-5121-1 and Table ISTB-5221-1 is less than or equal to $2.5V_r$. Based on a small acceptable range, a smooth running pump could be subject to unnecessary corrective action caused by numerically small changes in vibration levels.

IST-RR-1

Pump Vibration Reference Values and Acceptance Criteria

Proposed Alternative and Basis for Use

Proposed Alternative

Pumps with a measured V_r less than or equal to 0.05 inches per second (ips) for a particular vibration measurement location shall have subsequent test results for that location compared to an acceptable range based on 0.05 ips. In addition to the applicable ASME OM Code requirements, all pumps in the IST Program will be included in and will remain in the Predictive Maintenance Program regardless of their smooth running status.
When new reference values are established, the measured parameters will be evaluated for each location to determine if the provisions of this relief request still apply. If the measured V_r is greater than 0.05 ips, the requirements of ISTB-3300 will be applied even if the pump is identified above. Conversely, if the measured V_r is less than or equal to 0.05 ips, a minimum value of 0.05 ips will be used in determining the acceptable, alert, and required action ranges.

Basis for Use

For very small reference values, hydraulic noise and instrument error can be a significant portion of the vibration reading and affect the repeatability of subsequent measurements. Also, experience gathered from the Unit 1 preventive maintenance program has shown that changes in vibration levels in the range of 0.05 ips do not normally indicate significant degradation in pump performance.
To avoid unnecessary corrective action, a minimum V_r of 0.05 ips is being established for velocity measurements. This minimum value will be applied to individual vibration locations for the pumps listed in the above table where the measured reference value is less than 0.05 ips.
The Predictive Maintenance Program currently employs the following predictive monitoring techniques on an as applicable and as needed basis:

A. Vibration monitoring and analysis beyond that required by ISTB,
B. Oil sampling and analysis, and
C. Thermographic Analysis.

Bearing temperature trending is available for a number of the components through the plant process computer system.

IST-RR-1

Pump Vibration Reference Values and Acceptance Criteria

Proposed Alternative and Basis for Use (continued)

If the measured parameters are discovered to be outside the normal operating range or to be trending toward an unacceptable degraded state, appropriate actions are taken that may include:

A. Increased monitoring to establish rate of change,
B. Review of component specific information to identify cause, and
C. Removal of the pump from service to perform maintenance.

This alternative to the requirements of ISTB-3300 provides an acceptable level of quality and safety.

Duration of Proposed Alternative

This request is for the duration of the Unit 2 PST period and for the duration of the first concurrent Unit 1 / Unit 2 IST 120-month interval (third interval for Unit 1 and first interval for Unit 2).

Precedents

The following NRC accepted precedent submittals are noted for similar relief requests:

WBN Unit 1 second IST interval, which was applicable to Unit 1 and common Unit 1 and Unit 2 pumps (*Watts Bar Nuclear Plant, Unit 1 - Requests for Relief for the Second 10-Year Pump and Valve Inservice Testing Program*, ADAMS Accession Number ML070090504, dated March 9, 2007).
Sequoyah Nuclear Plant (SQN) Units 1 and 2 and WBN Units 1 and 2 are very similar in design with identical pump manufacturer/model applications in many cases. SQN was granted a similar relief request for their third IST interval (*Sequoyah Nuclear Plant, Units 1 and 2 - Request for Relief from the Requirements of the ASME Code*, ADAMS Accession Number ML061790733, dated July 27, 2006).
Beaver Valley Power Station, Unit No. 2 - Relief Request Nos. PRR1, PRR2, PRR3, PRR4, PRR5, PRR6, PRR7, PRR8, PRR9, and VRR1 Regarding the Third 10-Year Inservice Testing Program Relief Requests, (ADAMS Accession Number ML080140299, dated February 14, 2008).
James A. FitzPatrick Nuclear Power Plant - Relief Requests for the Fourth Interval Inservice Testing Program, (ADAMS Accession Number ML072910422, dated November 27, 2007).
North Anna Power Station, Units 1 and 2 RE: Inservice Testing Program for Pump and Valves, Third Ten Year Interval Update, (ADAMS Accession Number ML020280439, dated January 28, 2002).

Status

This Relief Request is approved. See Reference 2.AP (Unit 2) and 2.AQ (Unit 1).

Appendix C - Pump Relief Requests
Page 5 of 8
IST-RR-2
ERCW Screen Wash Pump Test Method

Relief Request in Accordance with 10 CFR 50.55a(f)(5)(iii)
Inservice Testing Impracticality

ASME Code Component(s) Affected

Pump ID	Pump Description	Pump Group	Pump Type
1-PMP-67-431-A	ERCW SCREEN WASH PUMP 1A-A	A	VLS
1-PMP-67-440-B	ERCW SCREEN WASH PUMP 1B-B	A	VLS
2-PMP-67-437-A	ERCW SCREEN WASH PUMP 2A-A	A	VLS
2-PMP-67-447-B	ERCW SCREEN WASH PUMP 2B-B	A	VLS

See Section 3.4 of this TI for additional information for pump group and type.

Applicable Code Edition and Addenda

ASME OM Code, 2004 Edition through 2006 Addenda

Applicable Code Requirement

ISTB-5210 Preservice Testing
(a) In systems where resistance can be varied, flow rate and differential pressure shall be measured at a minimum of five points. If practicable, these points shall be from pump minimum flow to at least pump design flow. A pump curve shall be established based on the measured points. At least one point shall be designated as the reference point(s). Data taken at the reference point will be used to compare the results of inservice tests. A pump curve need not be established for pumps in systems where resistance cannot be varied.

ISTB-5221 Group A Test Procedure
(b) The resistance of the system shall be varied until the flow rate equals the reference point. The differential pressure shall then be determined and compared to its reference value. Alternatively, the flow rate shall be varied until the differential pressure equals the reference point and the flow rate determined and compared to the reference flow rate value.

ISTB-5223 Comprehensive Test Procedure
(b) The resistance of the system shall be varied until the flow rate equals the reference point. The differential pressure shall then be determined and compared to its reference value. Alternatively, the flow rate shall be varied until the differential pressure equals the reference point and the flow rate determined and compared to the reference flow rate value.

IST-RR-2
ERCW Screen Wash Pump Test Method

Impracticality of Compliance

The configuration of the ERCW Screen Wash Pump discharge piping system does not provide straight lengths of piping that will support the installation of a permanent flow measuring device or the utilization of a portable flow measuring device capable of providing accurate flow rate measurements. The lack of permanent or temporary flow instrumentation makes it impractical to measure pump flow as required for performance of Preservice, Group A, and Comprehensive pump tests.

Burden Caused by Compliance

Significant system modifications, such as piping rerouting and support redesign, would be required to obtain a configuration that would provide reliable flow readings. Refer to Basis for Use section for further details.

Proposed Alternative and Basis for Use

Proposed Alternative
The preservice, Group A, and comprehensive tests will be performed by setting the system resistance to the same point for each test with the throttle valves full open. Flow will not be measured. The remaining variable that could affect system resistance is the spray nozzles. The condition of the spray nozzles will be inspected during each test performance with corrective actions initiated as necessary, thus providing assurance that the spray nozzle condition will not affect flow rate. With system resistance maintained constant for each test, pump degradation would be identified through changes in differential pressure. Differential pressure is calculated using inlet (based on lake level or suction pressure) and discharge pressure. The pump will be trended for degradation based on differential pressure at this point. Vibration readings will also be taken at this reference point. The pumps will be tested in this manner for the preservice, the quarterly Group A, and the biennial Comprehensive tests.
Instrument accuracy and acceptance criteria for pump differential pressure and vibration will meet the requirements of Table ISTB-3510-1, "Required Instrument Accuracy," and Table ISTB-5221-1, "Vertical Line Shaft Centrifugal Pump Test Acceptance Criteria," respectively, for the appropriate test type.
Preservice test data for differential pressure and vibration will be evaluated and when confirmed to represent acceptable pump operation, will be used as reference values for subsequent quarterly Group A and biennial comprehensive tests.
For a new ERCW screen wash pump, the bowl assembly will be tested at the vendor's facility prior to shipment to WBN. This test data will be adjusted by the vendor to account for the pump column (in order to represent the fully assembled pump configuration). The vendor pump curve will then be developed and provided to WBN prior to pump installation.

Proposed Alternative and Basis for Use (continued)

Proposed Alternative (Continued)

The preservice pump test for a new ERCW screen wash pump will be performed by setting the throttle valves full open (the same position as the Group A and comprehensive tests) and measuring pump differential pressure and vibration. Flow will not be measured. In addition, the condition of the screen spray nozzles will be inspected to verify that the spray covers the screen spray area and the spray force is sufficient to remove any debris present.
The measured differential pressure will be plotted on the vendor pump curve to determine the theoretical flow rate. The differential pressure and theoretical flow rate will then be evaluated against the requirements established in the ERCW screen wash pump design specification, design criteria, and system description (i.e., pump performance should achieve 350 feet total developed head at 270 gallons per minute). If the pump hydraulic data meets the design requirements with some margin to provide for future degradation and the vibration data analysis is acceptable, the pump will be considered to be operating acceptably. Visual examination of screen wash spray nozzle performance provides additional positive verification that the pump is operating acceptably and is capable of performing its safety-related function.

Basis for Use

The piping design does not provide permanent in-line instrumentation to measure flow. The pump design (vertical line shaft) and discharge piping do not allow the use of portable flow measuring equipment such as ultrasonic flow meters. These pumps take suction from the pump pit directly below the pump deck and are positioned on the deck adjacent to the traveling screens. The discharge piping for each pump is short and open ended, containing several elbows, reducers, and valves prior to entering the traveling screen enclosure. The configuration of this piping system does not provide straight lengths of piping that will support the installation of a permanent flow measuring device or the utilization of a portable flow measuring device capable of providing accurate flow rate measurements. Significant system modifications, such as piping rerouting and support redesign, would be required to obtain a configuration that would provide reliable flow readings.
Flow is not the critical parameter for these pumps. The nature of their operation is to ensure that sufficient pressure is maintained at the spray nozzles during flushing operations of the traveling water screens to ensure that sufficient force is exerted on the debris accumulated on the screen to remove it. This can be verified by visual observation verifying the effectiveness of the flushing operation.
Maintenance history was reviewed for spray nozzle plugging and it was determined that nozzle plugging is infrequent. The spray nozzles are inspected by operations personnel during spray operation with corrective maintenance initiated as required.
Based on the information provided above, compliance with the Code requirements is impractical and the proposed alternative provides reasonable assurance of the operational readiness of the ERCW Screen Wash Pumps.

IST-RR-2
ERCW Screen Wash Pump Test Method

Duration of Proposed Alternative

This request is for the duration of the first concurrent Unit 1 / Unit 2 IST 120-month Inservice Testing interval (third interval for Unit 1 and first interval for Unit 2).

Precedents

This relief request was granted for the WBN Unit 1 second interval (*Watts Bar Nuclear Plant, Unit 1 - Requests for Relief for the Second 10-Year Pump and Valve Inservice Testing Program*, ADAMS Accession Number ML070090504, dated March 9, 2007 and *Watts Bar Nuclear Plant, Unit 1 - Safety Evaluation of Relief Request PV-02, Revision 1, For the Second 10-Year Interval of the Inservice Testing Program*, ADAMS Accession Number ML102360191, dated August 30, 2010).
A similar relief request was granted for Sequoyah Units 1 and 2 third interval (*Sequoyah Nuclear Plant, Units 1 and 2 - Request for Relief from the Requirements of the ASME Code,* ADAMS Accession Number ML061790733, dated July 27, 2006).

Status

This Relief Request is approved. See Reference 2.AP (Unit 2) and 2.AQ (Unit 1).

Appendix D - Valve Relief Requests
Page 1 of 13

IST-RR-3
Reactor Head Vent Valve Stroke Time Testing

Relief Request in Accordance with 10 CFR 50.55a(f)(5)(iii)
Inservice Testing Impracticality

ASME Code Component(s) Affected

Valve ID	Function	Drawing /Coor	Cat	Act/Pass	Class	Size	Type	Act
1-FSV-68-396-B	REACTOR VESSEL HEAD VENT	1-47W813-1 / F-5	B	Active	2	1	GL	SO
1-FSV-68-397-A	REACTOR VESSEL HEAD VENT	1-47W813-1 / G-6	B	Active	2	1	GL	SO
2-FSV-68-396-B	REACTOR VESSEL HEAD VENT	2-47W813-1 / F-5	B	Active	2	1	GL	SO
2-FSV-68-397-A	REACTOR VESSEL HEAD VENT	2-47W813-1 / F-6	B	Active	2	1	GL	SO

See Section 3.5 of this TI for additional information for valve category, type, and actuator. Referenced Drawings are not needed for review but are available upon request.

Applicable Code Edition and Addenda

ASME OM Code, 2004 Edition through 2006 Addenda

Applicable Code Requirement

ISTC-3300 Reference Values

Reference values shall be determined from the results of preservice testing or from the results of inservice testing. These tests shall be performed under conditions as near as practicable to those expected during subsequent inservice testing...

ISTC-3310 Effects of Valve Repair, Replacement, or Maintenance on Reference Values

When a valve or its control system has been replaced, repaired, or has undergone maintenance that could affect the valve's performance, a new reference value shall be determined or the previous value reconfirmed by an inservice test run before the time it is returned to service or immediately if not removed from service...

ISTC-3510 Exercising Test Frequency

Active Category A, Category B, and Category C check valves shall be exercised nominally every 3 months,...

ISTC-3560 Fail-Safe Valves

Valves with fail-safe actuators shall be tested by observing the operation of the actuator upon loss of valve actuating power in accordance with the exercising frequency of ISTC-3510.

IST-RR-3

Reactor Head Vent Valve Stroke Time Testing

Applicable Code Requirement (continued)

ISTC-5151 Valve Stroke Testing

(a) Active valves shall have their stroke times measured when exercised in accordance with ISTC-3500.

(b) The limiting value(s) of full-stroke time of each valve shall be specified by the Owner.

(c) Stroke time shall be measured to at least the nearest second.

(d) Any abnormality or erratic action shall be recorded (see ISTC-9120), and an evaluation shall be made regarding need for corrective action.

ISTC-5152 Stroke Test Acceptance Criteria

Test results shall be compared to reference values established in accordance with ISTC-3300, ISTC-3310, or ISTC-3320.

(a) Valves with reference stroke times of greater than 10 sec shall exhibit no more than ±25% change in stroke time when compared to the reference value.

(b) Valves with reference stroke times of less than or equal to 10 sec shall exhibit no more than ±50% change in stroke time when compared to the reference value.

(c) Valves that stroke in less than 2 sec may be exempted from ISTC-5152(b). In such cases the maximum limiting stroke time shall be 2 sec.

ISTC-5153 Stroke Test Corrective Action

(a) If a valve fails to exhibit the required change of obturator position or exceeds the limiting values of full-stroke time [see ISTC-5151(b)], the valve shall be immediately declared inoperable.

(b) Valves with measured stroke times that do not meet the acceptance criteria of ISTC-5152 shall be immediately retested or declared inoperable. If the valve is retested and the second set of data also does not meet the acceptance criteria, the data shall be analyzed within 96 hr to verify that the new stroke time represents acceptable valve operation, or the valve shall be declared inoperable. If the second set of data meets the acceptance criteria, the cause of the initial deviation shall be analyzed and the results documented in the record of tests (see ISTC-9120).

IST-RR-3
Reactor Head Vent Valve Stroke Time Testing

Impracticality of Compliance

Relief is being requested from measuring stroke times, establishing reference values, comparing stroke times to acceptance criteria / limiting values, and taking corrective action related to stroke time acceptance criteria / limiting values for the Reactor Vessel Head Vent throttle valves. In addition, fail safe testing of these valves will be performed at the same time and frequency as the proposed alternative exercise testing.

These valves are totally enclosed [seal welded bonnet], one-inch Target Rock solenoid valves, with thumb wheel actuated controllers that permit remote positioning of the valves. Valve opening and closing speed, and consequently valve opening and closing stroke time, is controlled by the rate at which the thumbwheel controller is moved and is not representative of valve condition.

Burden Caused by Compliance

Significant system modifications, such as alteration of the valve's control circuit to provide a separate handswitch to permit instantaneous valve operation, would be required solely to allow for the performance of valve stroke time testing.

Proposed Alternative and Basis for Use

Proposed Alternative

TVA proposes to utilize an enhanced maintenance program based on the following attributes:

A. Periodic replacement of critical valve parts (i.e., the linear voltage differential transformer (LVDT) that provides valve position indication feedback, the coil that operates the valve, and the valve's electrical terminal board) in accordance with TVA's environmental qualification binder for the valve.

B. Calibration of the valve's position control system each refueling outage. This calibration involves utilizing the valve controller to position the valve at various positions and utilizing the LVDT to determine the valve stem position. These are compared to ensure valve operation is as expected.

IST-RR-3
Reactor Head Vent Valve Stroke Time Testing

Proposed Alternative and Basis for Use (continued)

In addition to the enhanced maintenance program, tests will be conducted as follows to provide positive verification of the valve's ability to fulfill its specific function:

A. Full stroke exercise of each valve during shutdowns. The test consists of cycling the valve controller through one complete cycle and verifying (using the valve position indicator operated by the LVDT attached to the valve stem) that the valve cycles through one full cycle in response to the valve controller. This action also simulates loss of power and satisfies the fail-safe close test requirement.

B. During refueling outages, in addition to cycling the controller through one complete cycle and using the valve position indicator to verify valve travel, supplement the verification of valve travel by (a) ensuring no detectable flow is present through the valves with the valves closed, (b) ensuring that with each valve open flow is present, and (c) ensuring that when each valve is returned to the closed position, no detectable flow is present. The presence or absence of flow is verified by monitoring a change in a process parameter, either the valve tail pipe temperature for an increase/decrease or the pressurizer relief tank for a temperature increase/decrease or level increase/no change. This additional verification, which is consistent with ISTC-3520, ensures the valve disk is still attached to the stem and is capable of controlling flow.

Basis for Use

The RCSH vent throttle valves are throttled open manually by main control room operator action to (1) provide a reactor vessel head vent path; (2) vent noncondensables from the head during an accident to promote natural circulation; and (3) prevent gases from impeding reactor coolant circulation flow through the core. These valves are totally enclosed (seal welded bonnet), 1-inch Target Rock solenoid valves with thumb-wheel actuated controllers that permit remote positioning of the valves. Valve opening and closing speed, and consequently valve opening and closing stroke time, are controlled by the rate at which the thumb-wheel controller is moved, not upon valve condition. Design requirements impose a minimum stroke time limitation on these valves of not faster than 5 seconds. Restricting the stroke time to not less than 5 seconds effectively prohibits stroke timing the valve because the valve is capable of stroking considerably faster than the 5-second limit. Even if the 5-second limit did not exist, stroke timing of the valve using its thumb-wheel actuated controller would result in timing the ability of the operator to turn the thumb-wheel and not the ability of the valve to move.

IST-RR-3
Reactor Head Vent Valve Stroke Time Testing

Proposed Alternative and Basis for Use (continued)

An enhanced maintenance program of disassembly and inspection of valve internal parts was evaluated. This method was not considered appropriate for the following reasons:

A. Frequent disassembly can lead to distortion of the valve parts caused by the repetitive welding process to reinstall the seal weld. This distortion could cause unacceptable operational seat leakage, binding of internal parts, and other operational problems.

B. The physical appearance of the internal parts does not always provide clear and evident verification of acceptable valve operation.

Based on the information provided above, compliance with the Code requirements is impractical and the proposed alternative provides reasonable assurance of the operational readiness of the Reactor Vessel Head Vent valves.

Duration of Proposed Alternative

This request is for the duration of the Unit 2 PST period and for the duration of the first concurrent Unit 1 / Unit 2 IST 120-month Inservice Testing interval (third interval for Unit 1 and first interval for Unit 2).

Precedents

A similar relief request was granted for the Unit 1 second interval (*Watts Bar Nuclear Plant, Unit 1 - Requests for Relief for the Second 10-Year Pump and Valve Inservice Testing Program*, ADAMS Accession Number ML070090504, dated March 9, 2007).
Sequoyah Units 1 and 2 and WBN Units 1 and 2 are very closely related in design. Sequoyah was granted a similar relief request for their third interval (*Sequoyah Nuclear Plant, Units 1 and 2 - Request for Relief from the Requirements of the ASME Code*, ADAMS Accession Number ML061790733, dated July 27, 2006).

Status

This Relief Request has been authorized. See Reference 2.AP (Unit 2) and 2.AQ (Unit 1).

Appendix D - Valve Relief Requests
Page 6 of 13

IST-RR-4
Pressurizer Safety Valve Test Before Electric Generation

Proposed Alternative in Accordance with 10 CFR 50.55a(a)(3)(ii)
Hardship or Unusual Difficulty without Compensating Increase in Level of Quality and Safety

ASME Code Component(s) Affected

Valve ID	Function	Drawing /Coord	Cat	Act/Pass	Class	Size	Type	Act
2-RFV-68-563	PRESSURIZER SAFETY VALVE	2-47W813-1 / A-2	C	Active	1	6	RVL	SA
2-RFV-68-564	PRESSURIZER SAFETY VALVE	2-47W813-1 / A-2	C	Active	1	6	RVL	SA
2-RFV-68-565	PRESSURIZER SAFETY VALVE	2-47W813-1 / A-2	C	Active	1	6	RVL	SA

See Section 3.5 of this TI for additional information for valve category, type, and actuator. Referenced Drawings are not needed for review but are available upon request.

Applicable Code Edition and Addenda

ASME OM Code, 2004 Edition through 2006 Addenda

Applicable Code Requirement

I-7210 Class 1 Safety Valves

Within 6 months before initial reactor criticality, each valve shall have its set-pressure verified. Set-pressure verification shall be determined by pressurizing the system up to the valve set-pressure and opening the valve, or the valve may be tested at or below normal system operating pressure with an assist device.

Reason for Request

Relief is being requested from verifying set-pressure while the valves are installed in the plant using system pressure or reduced system pressure with an assist device. These test methods would require personnel entry into a confined space at high ambient temperatures to install/remove the lift assist device on the PSVs or require plant operators to raise RCS pressure to the overpressure condition necessary to open the PSV to meet ASME OM Code I-7210 with 2 out of 3 PSVs gagged and repeat this evolution three times in succession, once for each PSV. Therefore, these in-situ conditions represent a hardship in performing the test and unusual difficulty without a compensating increase in the level of quality and safety.

IST-RR-4
Pressurizer Safety Valve Test Before Electric Generation

Proposed Alternative and Basis for Use

Proposed Alternative

TVA proposes to perform set-pressure testing of the pressurizer safety valves (PSVs) at an approved vendor test facility within 6 months prior to initial reactor criticality.

The PSVs will be set-pressure tested using steam at the same facility that tests similar or identical valves from TVA and many other nuclear utilities in accordance with the requirements of ASME OM Code Appendix I. The valves will be installed on a steam test header at the vendor test facility in their normal vertical operating position. The valves will be thermally stabilized in an environmental chamber to an ambient temperature of 135 °F ± 5 °F for a minimum of 12 hours prior to test. As part of thermal stabilization, the steam accumulator and the valve inlet will be pressurized with saturated steam at 90 percent of the valve set-pressure for a minimum of 6 hours. After thermal stabilization is completed, testing for pre-test seat leakage, as-found or as-left set-pressure, and post-test seat leakage will be conducted using saturated steam in the environmental chamber. A final seat leakage test using gaseous nitrogen will be conducted outside the chamber at ambient conditions prior to releasing the valve for return to WBN, Unit 2.

The valves are shipped to the vendor test facility and returned in an upright position. They are inspected upon arrival at the vendor test facility and on return to WBN, Unit 2 for damage or lteration. The valves are stored in a controlled storage area at the vendor test facility or at WBN, Unit 2 during any prolonged non-testing period. Prior to and after testing is completed, the adjusting bolt locking device will be verified and/or torqued to 150 ft-lbs. Lock wires and seals will be installed to prevent changes to the certified valve set-pressure. Valves will be lifted using approved lifting points and Foreign Material Exclusion (FME) will be maintained while the valves are removed from the system. The requested alternative is an activity normally performed during refueling outages for WBN, Unit 1. The same site organizations and procedures/practices used for handling and shipping the WBN, Unit 1 valves will be used to perform this activity. No instances have occurred in WBN, Unit 1 where handling, shipping, storage, removal or installation issues have resulted in changes in set-pressure of these valves.

The proposed alternative is essentially the same test method allowed by ASME OM Code Mandatory Appendix I and is used during the 1ST interval, which is performed in conjunction with refueling outages where one or more PSVs are either (a) removed, tested at a vendor facility, and reinstalled, or (b) replaced with valve(s) that were pretested at a vendor facility.

IST-RR-4
Pressurizer Safety Valve Test Before Electric Generation

Proposed Alternative and Basis for Use (continued)

Basis for Use

There are a number of issues that make testing in the installed configuration a hardship without a compensating increase in the level of quality and safety. The following problems would be encountered:

A. Raising RCS pressure to the overpressure condition necessary to open the valve to meet ASME OM Code 1-7210 with two out of three valves gagged would create an undesirable operating condition. This condition would have to be repeated three times in succession, once for each PSV.

B. While an assist device is available, it is generally used on other valve installations (i.e., the main steam safety valves) in less restrictive locations. Testing with the assist device necessitates that test personnel are in close proximity to the valves in a confined space (the pressurizer enclosure) with temperatures above 160 degree Fahrenheit (°F), which represents a potential safety hazard. These temperatures would increase with the lifting of the valves during testing. Extraction of test personnel, should they become incapacitated by injury or illness, would be difficult.

C. The rupture pressure of the pressurizer relief tank rupture disk is 88 to 1 00 pounds per square inch gauge. It is possible that the amount of discharge that would result from testing the PSVs in situ could cause the rupture disk to rupture and discharge the contents of the tank into the containment building, resulting in personnel hazards and equipment damage.

D. Instruments including those on the assist device, used during testing would have to be qualified for the high ambient temperature, which is not feasible, thereby potentially reducing the accuracy of testing with the assist device.

E. The accuracy of the testing performed using the assist device is, in general, not as good as that of the test facility.

F. Controlling the RCS pressure to support the in situ PSV testing would be difficult.

The proposed alternative is essentially the same test method allowed by the ASME OM Code Mandatory Appendix I and is used during the IST interval, which is performed in conjunction with refueling outages where one or more PSVs are either (a) removed, tested at a vendor facility, and reinstalled, or (b) replaced with valve(s) that were pretested at a vendor facility.

Based on the information provided above, compliance with the Code requirements represents a hardship or unusual difficulty without a compensating increase in level of quality and safety. The proposed alternative provides reasonable assurance of the operational readiness of the PSVs.

IST-RR-4
Pressurizer Safety Valve Test Before Electric Generation

Duration of Proposed Alternative

This request is for the duration of the Unit 2 Preservice Test period.

Precedents

A similar relief request was granted for Unit 1 (*Watts Bar Unit 1 - Relief from ASME Section XI Regarding Pressurizer Safety Valve Testing*, ADAMS Accession Numbers ML073200567 and ML073200570, dated September 5, 1995).

Status

This Relief Request has been authorized. See Reference 2.AP.
Unit 2 achieved initial criticality on May 23, 2016, at 0216. IST-RR-5 approved an extension of the window for performing set pressure testing (prior to initial criticality) from 6 months to 9 months.

Appendix D - Valve Relief Requests
Page 10 of 13

IST-RR-5
Pressurizer Safety Valve Testing Before Initial Electric Power Generation

Proposed Alternative in Accordance with 10 CFR 50.55a(z)(1)
Acceptable Level of Quality and Safety

ASME Code Component(s) Affected

Valve ID	Function	Drawing /Coord	Cat	Act/Pass	Class	Size	Type	Act
2-RFV-68-563	PRESSURIZER SAFETY VALVE	2-47W813-1 / A-2	C	Active	1	6	RVL	SA
2-RFV-68-564	PRESSURIZER SAFETY VALVE	2-47W813-1 / A-2	C	Active	1	6	RVL	SA
2-RFV-68-565	PRESSURIZER SAFETY VALVE	2-47W813-1 / A-2	C	Active	1	6	RVL	SA

Applicable Code Edition and Addenda

ASME OM Code, 2004 Edition through 2006 Addenda

Applicable Code Requirement

Mandatory Appendix I, Section I-7210 Class 1 Safety Valves

Within 6 months before initial reactor criticality, each valve shall have its set-pressure verified.

Reason for Request

Relief is being requested from the requirement to verify set-pressures for the Watts Bar Nuclear Plant (WBN) Unit 2 pressurizer safety valves (PSVs) within six months before initial reactor criticality. The basis of the request is that the proposed alternative would provide an acceptable level of quality and safety. Specifically, Tennessee Valley Authority (TVA) is requesting that the ASME OM Code, Mandatory Appendix I, Section I-7210 requirement to test the PSVs within six months of initial criticality be extended to nine months before initial criticality.

This alternative request would extend the time period for compliance with Section I-7210 from April 13, 2016 (i.e., six months from the date that the PSVs were last tested) to July 13, 2016. TVA requests the contingency of extending the due date for compliance with Section I-7210 in order to have additional margin to reduce the potential effect on other plant activities and reduce the risk of having to regress the plant operating mode in order to perform the required testing should the initial criticality date exceed April 13, 2016.

IST-RR-5
Pressurizer Safety Valve Testing Before Initial Electric Power Generation

Proposed Alternative and Basis for Use

TVA proposes a contingency to extend the time interval for verifying set-pressure testing of the WBN Unit 2 PSVs prior to initial reactor criticality from six months to nine months. If it becomes necessary to utilize this extension, TVA will remove and test (or replace with pretested valves) the WBN Unit 2 PSVs at the first refueling outage. If WBN Unit 2 is able to achieve initial criticality by April 13, 2016, then this relief request will not be implemented and testing at the first refueling outage will be in accordance with the ASME OM Code requirements.

The WBN Unit 2 PSVs Serial Numbers N56964-10-0118, -0119, and -0120 (which correspond to 2-RFV-68-563, 2-RFV-68-564, and 2-RFV-68-565) have a design set pressure of 2485 psig and were as-left tested at the vendor's facility on April 29, 2011, April 28, 2011, and May 3, 2011, respectively. The as-left set pressures were 2485 psig, 2501 psig, and 2481 psig, respectively. After installing the PSVs and performing hot functional testing, TVA removed the valves and sent them to an off-site test facility where they were retested on October 14, 2015, October 15, 2015, and October 13, 2015, respectively. The initial (as-found) set pressures were 2446 psig (1.57% off set pressure, low), 2505 psig (0.8% off set pressure, high), and 2546 psig (2.45% off set pressure, high), respectively. The as-found set pressures were within the ASME OM Code, Mandatory Appendix I, Section I-1320 allowed three percent tolerance for as-found set pressure.

By comparing the difference between the as-left tests at the vendor in 2011 to the as-found tests in 2015, the amount of set pressure drift from 2011 to 2015 was determined. For these PSVs, the drift in set pressure between 2011 and 2015 (approximately 4 years and 5-1/2 months) was 1.57% (low), 0.16% (high), and 2.62% (high), respectively. Although not an OM Code criteria, the set pressure drifts between 2011 and 2015 were also within three percent of design set pressure.

IST-RR-5

Pressurizer Safety Valve Testing Before Initial Electric Power Generation

Proposed Alternative and Basis for Use (continued)

The test data from 2011 and 2015 provide high confidence that the set pressures for these valves will remain within the allowable OM Code tolerances until the first WBN Unit 2 refueling outage (currently scheduled for October 9, 2017).

Summary of PSV Set Pressure Test Information					
Valve S/N N56964-10-	Design Set Pressure	As-Left Set Pressure	As-Found Set Pressure	Code (Design vs. As-Found)	Drift (As-Left vs As-Found)
		Date	Date		
0118	2485 psig	2485 psig	2446 psig	1.57% (low)	1.57% (low)
		April 29, 2011	Oct 14, 2015		
0119	2485 psig	2501 psig	2505 psig	0.8% (high)	0.16% (high)
		April 28, 2011	Oct 15, 2015		
0120	2485 psig	2481 psig	2546 psig	2.45% (high)	2.62% (high)
		May 3, 2011	Oct 13, 2015		

The WBN Unit 2 PSVs are a proven design considering that they are interchangeable with the PSVs at WBN Unit 1 and Sequoyah Nuclear Plant, Units 1 and 2. Additionally, the pressurizer relief system configurations are similar amongst these units.

To verify set pressures would require TVA to either replace the PSVs with pretested valves, or remove and test the PSVs at an off-site facility. Either option would require intensive work in a short time, affect other work and test activities currently underway, and could delay startup of WBN Unit 2 by causing a regression in plant status to a lower operating mode.

OM Code, Mandatory Appendix I, Section I-1320(a) requires 20 percent of these valves to be tested within any 24 month period and all to be tested within five years. Potentially extending the time period for testing before initial criticality from six months to nine months will not affect that requirement. If the extension is applied and the first refueling outage is scheduled for October 9, 2017, the PSVs will be tested within 24 months, which would exceed the OM Code requirement to test 20% of the valves within any 24 month period and would also meet the OM Code requirement to test all of the valves within five years. Testing the PSVs at the first refueling outage (if required) would provide additional assurance that the PSVs will remain within the OM Code allowed three percent tolerance for as-found set pressure. Therefore, the OM Code requirements for percentages and frequency will be met.

Based on the information provided above, the proposed alternative provides an acceptable level of quality and safety and provides reasonable assurance of the operational readiness of the WBN Unit 2 PSVs.

IST-RR-5
Pressurizer Safety Valve Testing Before Initial Electric Power Generation

Duration of Proposed Alternative

This request is for the duration of the Unit 2 Preservice Test period.

Precedents

A similar relief request was approved by the NRC for WBN Unit 1 (*Watts Bar Unit 1 - Relief from ASME Section XI Regarding Pressurizer Safety Valve Testing*, ADAMS Accession Numbers ML073200567 and ML073200570, dated September 5, 1995).

Status

This Relief Request has been authorized. See Reference 2.AR.
Unit 2 achieved initial criticality on May 23, 2016, at 0216.

Deferred Test Justification: DTJ-01

Valve ID	Function	Drawing / Coor	Cat	Act/Pass	Class	Size	Type	Act
1-FCV-1-11	MAIN STEAM ISOL VALVE LOOP 2	1-47W801-1 / E-3	B	Active	2	32	GL	AO
1-FCV-1-22	MAIN STEAM ISOL VLV LOOP 3	1-47W801-1 / F-3	B	Active	2	32	GL	AO
1-FCV-1-29	MAIN STEAM ISOL VALVE LOOP 4	1-47W801-1 / A-3	B	Active	2	32	GL	AO
1-FCV-1-4	MAIN STEAM ISOL VALVE LOOP 1	1-47W801-1 / C-3	B	Active	2	32	GL	AO
2-FCV-1-11	MAIN STEAM ISOL VALVE LOOP 2	2-47W801-1 / E-3	B	Active	2	32	GL	AO
2-FCV-1-22	MAIN STEAM ISOL VLV LOOP 3	2-47W801-1 / F-3	B	Active	2	32	GL	AO
2-FCV-1-29	MAIN STEAM ISOL VALVE LOOP 4	2-47W801-1 / A-3	B	Active	2	32	GL	AO
2-FCV-1-4	MAIN STEAM ISOL VALVE LOOP 1	2-47W801-1 / C-3	B	Active	2	32	GL	AO

Required Test Frequency: Full stroke exercise with stroke time closed (STC) on a Quarterly (Q) frequency
Fail Safe Close (FSC) on a Quarterly (Q) frequency

Deferred Test Frequency: Full stroke exercise with stroke time closed (STC) on a Refueling Outage (RO) frequency
Fail Safe Close (FSC) on a Refueling Outage (RO) frequency

Justification for Deferred Test Frequency: Closing these valves causes a loss of main steam flow from one steam generator which in turn causes a steam generator level transient, either of which could cause a unit trip and safety injection. Valves are equipped with part stroke capability, however, even a part stroke exercise increases the risk of an inadvertent valve closure when the unit is operating. In accordance with the manufacturer's recommendation, these valves should only be stroke time tested with steam on the valve. In accordance with Technical Specifications, stroke time testing is only performed during MODE 3 operation, which is during the startup or shutdown sequence.

Appendix E - Deferred Test Justifications

Deferred Test Justification: DTJ-02

Valve ID	Function	Drawing / Coor	Cat	Act/Pass	Class	Size	Type	Act
1-FCV-1-17	MAIN STEAM AUX FWP HDR SUPPLY ISOL	0-47W803-2 / C-7	B	Active	3	4	GA	MO
1-FCV-1-18	MAIN STEAM AUX FWP HDR SUPPLY ISOL	0-47W803-2 / C-7	B	Active	2	4	GA	MO
2-FCV-1-17	MAIN STEAM AUX FWP HDR SUPPLY ISOL	0-47W803-2 / B-4	B	Active	3	4	GA	MO
2-FCV-1-18	MAIN STEAM AUX FWP HDR SUPPLY ISOL	0-47W803-2 / B-4	B	Active	2	4	GA	MO

Required Test Frequency: Full stroke exercise with stroke time closed (STC) on a Quarterly (Q) frequency.
Full stroke exercise with stroke time open (STO) on a Quarterly (Q) frequency.

Deferred Test Frequency: Full stroke exercise with stroke time closed (STC) on a Cold Shutdown (CSD) frequency.
Full stroke exercise with stroke time open (STO) on a Cold Shutdown (CSD) frequency.

Justification for Deferred Test Frequency: Stroke time testing these valves to the close position or closing the valves to facilitate the stroke time open test completely isolates the steam driven auxiliary feedwater pump from its source of steam. Failure of either valve to reopen will cause a complete loss of auxiliary feedwater for the loss of all AC power or station blackout accidents.

Appendix E - Deferred Test Justifications

Deferred Test Justification: DTJ-03

Valve ID	Function	Drawing / Coor	Cat	Act/Pass	Class	Size	Type	Act
1-FCV-1-147	MAIN STEAM ISOL VLV LOOP 1 BYP WARMING VLV	1-47W801-1 / C-3	B	Active	2	2	GL	AO
1-FCV-1-148	MAIN STEAM ISOL VLV LOOP 2 BYP WARMING VLV	1-47W801-1 / E-3	B	Active	2	2	GL	AO
1-FCV-1-149	MAIN STEAM ISOL VLV LOOP 3 BYP WARMING VLV	1-47W801-1 / F-3	B	Active	2	2	GL	AO
1-FCV-1-150	MAIN STEAM ISOL VLV LOOP 4 BYP WARMING VLV	1-47W801-1 / A-3	B	Active	2	2	GL	AO
2-FCV-1-147	MAIN STEAM ISOL VLV LOOP 1 BYP WARMING VLV	2-47W801-1 / C-3	B	Active	2	2	GL	AO
2-FCV-1-148	MAIN STEAM ISOL VLV LOOP 2 BYP WARMING VLV	2-47W801-1 / E-3	B	Active	2	2	GL	AO
2-FCV-1-149	MAIN STEAM ISOL VLV LOOP 3 BYP WARMING VLV	2-47W801-1 / G-3	B	Active	2	2	GL	AO
2-FCV-1-150	MAIN STEAM ISOL VLV LOOP 4 BYP WARMING VLV	2-47W801-1 / B-3	B	Active	2	2	GL	AO

Required Test Frequency: Full stroke exercise with stroke time closed (STC) on a Quarterly (Q) frequency.
Fail Safe Close (FSC) on a Quarterly (Q) frequency.

Deferred Test Frequency: Full stroke exercise with stroke time closed (STC) on a Cold Shutdown (CSD) frequency.
Fail Safe Close (FSC) on a Cold Shutdown (CSD) frequency.

Justification for Deferred Test Frequency: These valves are maintained in the de-energized and closed condition during power operation due to App R requirements. Any time they are energized the plant enters Fire Protection OR 14.10.2 (30 days). The ASME OM Code requires valves to be tested under conditions as repeatable as practicable in order to eliminate any variables that could mask degradation. It does not require testing under normal operating, accident, or dynamic conditions. Testing during warming activities could occur under any temperature from near-ambient up to nominal operating temperature (NOT) of approximately 557 F. The differing temperatures will affect stroke time and could cause unnecessary actions due to times exceeding normal ranges. Testing during CSD by definition has to occur below 200 F. Therefore the temperature expected from test to test is more repeatable during CSD conditions. Steam line warming activities using these valves require operators to avoid excessive RCS cooldown rates, excessive steam line heatup rates, and careful sequencing to preclude risk of water hammer due to inadequate draining. None of these risks are present during CSD conditions. Addition of an IST test during this time would add to operator burden during startup when multiple activities are occurring and consequences of a human error are more serious. The test sequence would also need to be carefully controlled to avoid preconditioning the valves, since they may be stroked numerous times during the warming activity.

Appendix E - Deferred Test Justifications

Deferred Test Justification: DTJ-04

Valve ID	Function	Drawing / Coor	Cat	Act/Pass	Class	Size	Type	Act
1-FCV-72-40	RHR SPRAY HDR A ISOLATION	1-47W812-1 / F-3	A	Active	2	8	GA	MO
1-FCV-72-41	RHR SPRAY HDR B ISOLATION	1-47W812-1 / E-3	A	Active	2	8	GA	MO
2-FCV-72-40	RHR SPRAY HDR A ISOLATION	2-47W812-1 / F-4	A	Active	2	8	GA	MO
2-FCV-72-41	RHR SPRAY HDR B ISOLATION	2-47W812-1 / E-4	A	Active	2	8	GA	MO

Required Test Frequency: Full stroke exercise with stroke time open (STO) on a Quarterly (Q) frequency.
Full stroke exercise with stroke time closed (STC) on a Quarterly (Q) frequency.

Deferred Test Frequency: Full stroke exercise with stroke time open (STO) on a Refueling Outage (RO) frequency.
Full stroke exercise with stroke time closed (STC) on a Refueling Outage (RO) frequency.

Justification for Deferred Test Frequency: These valves are electrically interlocked with containment sump valves 1(2)-FCV-63-72-A and 1(2)-FCV-63-73-B in such a manner that the sump valves must be opened to allow the spray valves to open. Opening the containment sump valves during operation requires either draining an extensive portion of the RHR system or allowing it to drain to the containment sump. Draining and refilling these lines requires a considerable amount of time and could extend forced outage duration. Allowing the affected piping to drain to the sump requires extensive cleanup time. Therefore testing during forced outages is NOT practical.

Appendix E - Deferred Test Justifications

Deferred Test Justification: DTJ-05

Valve ID	Function	Drawing / Coor	Cat	Act/Pass	Class	Size	Type	Act
1-CKV-3-508	STEAM GENERATOR 3 MFW CHECK	1-47W803-1 / F-2	C	Active	2	16	CK	SA
1-CKV-3-509	STEAM GENERATOR 2 MFW CHECK	1-47W803-1 / E-2	C	Active	2	16	CK	SA
1-CKV-3-510	STEAM GENERATOR 1 MFW CHECK	1-47W803-1 / C-2	C	Active	2	16	CK	SA
1-CKV-3-511	STEAM GENERATOR 4 MFW CHECK	1-47W803-1 / B-2	C	Active	2	16	CK	SA
2-CKV-3-508	STEAM GENERATOR 3 MFW CHECK	2-47W803-1 / F-2	C	Active	2	16	CK	SA
2-CKV-3-509	STEAM GENERATOR 2 MFW CHECK	2-47W803-1 / E-2	C	Active	2	16	CK	SA
2-CKV-3-510	STEAM GENERATOR 1 MFW CHECK	2-47W803-1 / C-2	C	Active	2	16	CK	SA
2-CKV-3-511	STEAM GENERATOR 4 MFW CHECK	2-47W803-1 / B-2	C	Active	2	16	CK	SA

Required Test Frequency: Check Valve Closure (CVC) on a Quarterly (Q) frequency.
Check Valve Bi-directional Open (BDO) on a Quarterly (Q) frequency.

Deferred Test Frequency: Check Valve Closure (CVC) on a Cold Shutdown (CSD) frequency.
Check Valve Bi-directional Open (BDO) on a Cold Shutdown (CSD) frequency.

Justification for Deferred Test Frequency: Exercising these valves during power operation causes a loss of feedwater to the Steam Generator they supply which in turn causes a steam generator level transient, either of which could result in unit trip and safety injection.

Appendix E - Deferred Test Justifications

Deferred Test Justification: DTJ-06

Valve ID	Function	Drawing / Coor	Cat	Act/Pass	Class	Size	Type	Act
1-FCV-3-100	STEAM GENERATOR 4 MFW ISOL	1-47W803-1 / B-3	B	Active	2	16	GA	MO
1-FCV-3-103	STEAM GENERATOR 4 MFW REG VALVE	1-47W803-1 / B-4	B	Active	3	16	ANG	AO
1-FCV-3-236	STEAM GENERATOR 1 MFW BYPASS LINE ISOL	1-47W803-1 / C-3	B	Active	2	6	GL	AO
1-FCV-3-239	STEAM GENERATOR 2 MFW BYPASS LINE ISOL	1-47W803-1 / D-3	B	Active	2	6	GL	AO
1-FCV-3-242	STEAM GENERATOR 3 MFW BYPASS LINE ISOL	1-47W803-1 / E-3	B	Active	2	6	GL	AO
1-FCV-3-245	STEAM GENERATOR 4 MFW BYPASS LINE ISOL	1-47W803-1 / A-3	B	Active	2	6	GL	AO
1-FCV-3-33	STEAM GENERATOR 1 MFW ISOL	1-47W803-1 / C-3	B	Active	2	16	GA	MO
1-FCV-3-35	STEAM GENERATOR 1 MFW REG VALVE	1-47W803-1 / C-4	B	Active	3	16	ANG	AO
1-FCV-3-47	STEAM GENERATOR 2 MFW ISOL	1-47W803-1 / E-3	B	Active	2	16	GA	MO
1-FCV-3-48	STEAM GENERATOR 2 MFW REG VALVE	1-47W803-1 / E-4	B	Active	3	16	ANG	AO
1-FCV-3-87	STEAM GENERATOR 3 MFW ISOL	1-47W803-1 / F-3	B	Active	2	16	GA	MO
1-FCV-3-90	STEAM GENERATOR 3 MFW REG VALVE	1-47W803-1 / F-4	B	Active	3	16	ANG	AO
2-FCV-3-100	STEAM GENERATOR 4 MFW ISOL	2-47W803-1 / B-3	B	Active	2	16	GA	MO
2-FCV-3-103	STEAM GENERATOR 4 MFW REG VALVE	2-47W803-1 / B-4	B	Active	3	16	ANG	AO
2-FCV-3-185	STEAM GENERATOR 1 MFW BACKFLUSH WARMING	2-47W803-1 / C-2	B	Active	2	2	GL	AO
2-FCV-3-186	STEAM GENERATOR 2 MFW BACKFLUSH WARMING	2-47W803-1 / E-2	B	Active	2	2	GL	AO
2-FCV-3-187	STEAM GENERATOR 3 MFW BACKFLUSH WARMING	2-47W803-1 / G-2	B	Active	2	2	GL	AO
2-FCV-3-188	STEAM GENERATOR 4 MFW BACKFLUSH WARMING	2-47W803-1 / B-2	B	Active	2	2	GL	AO
2-FCV-3-236	STEAM GENERATOR 1 MFW BYPASS LINE ISOL	2-47W803-1 / C-3	B	Active	2	6	GL	AO
2-FCV-3-239	STEAM GENERATOR 2 MFW BYPASS LINE ISOL	2-47W803-1 / D-3	B	Active	2	6	GL	AO
2-FCV-3-242	STEAM GENERATOR 3 MFW BYPASS LINE ISOL	2-47W803-1 / F-3	B	Active	2	6	GL	AO
2-FCV-3-245	STEAM GENERATOR 4 MFW BYPASS LINE ISOL	2-47W803-1 / A-3	B	Active	2	6	GL	AO
2-FCV-3-33	STEAM GENERATOR 1 MFW ISOL	2-47W803-1 / C-3	B	Active	2	16	GA	MO
2-FCV-3-35	STEAM GENERATOR 1 MFW REG VALVE	2-47W803-1 / C-4	B	Active	3	16	ANG	AO
2-FCV-3-47	STEAM GENERATOR 2 MFW ISOL	2-47W803-1 / E-3	B	Active	2	16	GA	MO
2-FCV-3-48	STEAM GENERATOR 2 MFW REG VALVE	2-47W803-1 / E-4	B	Active	3	16	ANG	AO
2-FCV-3-87	STEAM GENERATOR 3 MFW ISOL	2-47W803-1 / F-3	B	Active	2	16	GA	MO

Appendix E - Deferred Test Justifications

Deferred Test Justification: DTJ-06

Valve ID	Function	Drawing / Coor	Cat	Act/Pass	Class	Size	Type	Act
2-FCV-3-90	STEAM GENERATOR 3 MFW REG VALVE	2-47W803-1 / F-4	B	Active	3	16	ANG	AO

Required Test Frequency:

All Valves
Full stroke exercise with stroke time closed (STC) on a Quarterly (Q) frequency.

Valves 1(2)-FCV-3-35, 1(2)-FCV-3-48, 1(2)-FCV-3-90, 1(2)-FCV-3-103, 2-FCV-3-185, 2-FCV-3-186, 2-FCV-3-187, 2-FCV-3-188, 1(2)-FCV-3-236, 1(2)-FCV-3-239, 1(2)-FCV-3-242, 1(2)-FCV-3-245
Fail Safe Close (FSC) on a Quarterly (Q) frequency.

Deferred Test Frequency:

All Valves
Full stroke exercise with stroke time closed (STC) on a Refueling Outage (RO) frequency.

Valves 1(2)-FCV-3-35, 1(2)-FCV-3-48, 1(2)-FCV-3-90, 1(2)-FCV-3-103, 2-FCV-3-185, 2-FCV-3-186, 2-FCV-3-187, 2-FCV-3-188, 1(2)-FCV-3-236, 1(2)-FCV-3-239, 1(2)-FCV-3-242, 1(2)-FCV-3-245
Fail Safe Close (FSC) on a Refueling Outage (RO) frequency.

Justification for Deferred Test Frequency:

Exercising these valves during power operation causes a change of feedwater flow to the Steam Generator they supply which in turn causes a steam generator level transient, either of which could result in unit trip and safety injection. Stroke time testing of the FCVs is normally performed in mode 3 during shutdown for a refueling when isolation of feedwater is performed. The test procedure is written to allow performance during modes 5 and/or 6, but performance in these modes requires extensive lifting/re-landing of permanent wiring and installation/removal of jumpers and test switches to allow testing of individual valves. Modes 5 and 6 performance is only used for Post Maintenance Testing purposes on a valve-by-valve bases. Therefore, testing during forced outages is NOT practical.

Appendix E - Deferred Test Justifications

Deferred Test Justification: DTJ-07

Valve ID	Function	Drawing / Coor	Cat	Act/Pass	Class	Size	Type	Act
1-CKV-3-805	AUX FEEDWATER PMP 1A-A SUCTION CHECK	0-47W803-2 / F-5	C	Active	3	8	CK	SA
1-CKV-3-806	AUX FEEDWATER PMP 1B-B SUCTION CHECK	0-47W803-2 / F-6	C	Active	3	8	CK	SA
1-CKV-3-810	TD AUX FEEDWATER PUMP SUCTION CHECK	0-47W803-2 / G-3	C	Active	3	10	CK	SA
1-CKV-3-864	TD AUX FEEDWATER PUMP DISCHARGE CHECK	0-47W803-2 / H-6	C	Active	3	6	CK	SA
2-CKV-3-805	AUX FEEDWATER PMP 2A-A SUCTION CHECK	0-47W803-2 / D-5	C	Active	3	8	CK	SA
2-CKV-3-806	AUX FEEDWATER PMP 2B-B SUCTION CHECK	0-47W803-2 / D-7	C	Active	3	8	CK	SA
2-CKV-3-810	TD AUX FEEDWATER PUMP SUCTION CHECK	0-47W803-2 / C-4	C	Active	3	10	CK	SA
2-CKV-3-864	TD AUX FEEDWATER PUMP DISCHARGE CHECK	0-47W803-2 / C-6	C	Active	3	6	CK	SA

Required Test Frequency:
All Valves
Check Valve Open (CVO) on a Quarterly (Q) frequency.
Check Valve Closure (CVC) on a Quarterly (Q) frequency.

Deferred Test Frequency:
All Valves
Check Valve Open (CVO) on a Refueling Outage (RO) frequency.

Valves 1(2)-CKV-3-805, 1(2)-CKV-3-806, 1(2)-CKV-3-810
Check Valve Close (CVC) on a Refueling Outage (RO) frequency.

Valves 1(2)-CKV-3-864
Check Valve Bi-directional Close (BDC) on a Refueling Outage (RO) frequency.

Justification for Deferred Test Frequency:
Exercising these valves to their safeguard position requires operating the AFW pumps at full flow to the steam generators while the steam generators are pressurized. The resulting introduction of cold water into the steam generator will cause undesirable thermal fatigue cycles on the feedwater piping and SG feedwater nozzles and will cause level transients due to SG shrink that could result in unit trip and unnecessary actuation of the safety injection system. Testing the valves during return to power operation during mid cycle shutdowns would delay startup of the plant because the test is performed in mode 3 in order to flow to the steam generators at full steam generator pressure. The close test will be performed at the same frequency as the open test as allowed by ISTC-3522(a).

Deferred Test Justification: DTJ-08

Valve ID	Function	Drawing / Coor	Cat	Act/Pass	Class	Size	Type	Act
1-FCV-62-84	PZR AUXILARY SPRAY LINE ISOLATION	1-47W809-1 / B-2	B	Active	1	3	GL	AO
2-FCV-62-84	PZR AUXILARY SPRAY LINE ISOLATION	2-47W809-1 / B-2	B	Active	1	3	GL	AO

Required Test Frequency: Full stroke exercise with stroke time closed (STC) on a Quarterly (Q) frequency.
Fail Safe Close (FSC) on a Quarterly (Q) frequency.

Deferred Test Frequency: Full stroke exercise with stroke time closed (STC) on a Cold Shutdown (CSD) frequency.
Fail Safe Close (FSC) on a Cold Shutdown (CSD) frequency.

Justification for Deferred Test Frequency: Exercising this valve during power operation results in initiation of auxiliary RCS spray. This causes a quenching effect on the Pressurizer steam volume, resulting in a drop in RCS pressure and an increase in Pressurizer level. Actuation of auxiliary spray flow also adversely impacts the fatigue evaluation, which accounts for and limits the number of thermal stress cycles to be experienced by the nozzles associated with auxiliary spray.

Appendix E - Deferred Test Justifications

Deferred Test Justification: DTJ-09

Valve ID	Function	Drawing / Coor	Cat	Act/Pass	Class	Size	Type	Act
1-FCV-32-102	ESSENT CONTROL AIR TR B CNTMT ISOL	0-47W848-1 / D-9	A	Active	2	2	GL	AO
1-FCV-32-110	CONTROL AIR CNTMT ISOL	0-47W848-1 / A-9	A	Active	2	2	GL	AO
1-FCV-32-80	ESSENT CONTROL AIR TR A CNTMT ISOL	0-47W848-1 / C-9	A	Active	2	2	GL	AO
2-FCV-32-103	ESSENT CONTROL AIR TR B CNTMT ISOL	0-47W848-1 / E-9	A	Active	2	2	GL	AO
2-FCV-32-111	CONTROL AIR CNTMT ISOL	0-47W848-1 / H-9	A	Active	2	2	GL	AO
2-FCV-32-81	ESSENT CONTROL AIR TR A CNTMT ISOL	0-47W848-1 / G-9	A	Active	2	2	GL	AO

Required Test Frequency:

Valves 1-FCV-32-80-A, 1-FCV-32-102-B, 1-FCV-32-110-A, 2-FCV-32-81-A, 2-FCV-32-103-B, 2-FCV-32-111-B
Full stroke exercise with stroke time closed (STC) on a Quarterly (Q) frequency.

Valves 1-FCV-32-80-A, 1-FCV-32-102-B, 1-FCV-32-110-A, 2-FCV-32-81-A, 2-FCV-32-103-B, 2-FCV-32-111-B
Fail Safe Close (FSC) on a Quarterly (Q) frequency.

Deferred Test Frequency:

Valves 1-FCV-32-80-A, 1-FCV-32-102-B, 1-FCV-32-110-A, 2-FCV-32-81-A, 2-FCV-32-103-B, 2-FCV-32-111-B
Full stroke exercise with stroke time closed (STC) on a Cold Shutdown (CSD) frequency.

Valves 1-FCV-32-80-A, 1-FCV-32-102-B, 1-FCV-32-110-A, 2-FCV-32-81-A, 2-FCV-32-103-B, 2-FCV-32-111-B
Fail Safe Close (FSC) on a Cold Shutdown (CSD) frequency.

Justification for Deferred Test Frequency:

Exercising these valves to the closed position interrupts the air supply to a number of critical instruments and valves inside containment. Failure of these valves to reopen could cause unstable operation and unit trip by allowing all of the valves and instruments to assume their failed condition.

Appendix E - Deferred Test Justifications

Deferred Test Justification: DTJ-10

Valve ID	Function	Drawing / Coor	Cat	Act/Pass	Class	Size	Type	Act
1-CKV-61-658	ICE CONDENSER FLOOR DRAIN GATE 1	1-47W814-2 / D-12	C	Active	3	12	CK	SA
1-CKV-61-659	ICE CONDENSER FLOOR DRAIN GATE 2	1-47W814-2 / D-12	C	Active	3	12	CK	SA
1-CKV-61-660	ICE CONDENSER FLOOR DRAIN GATE 3	1-47W814-2 / D-12	C	Active	3	12	CK	SA
1-CKV-61-661	ICE CONDENSER FLOOR DRAIN GATE 4	1-47W814-2 / D-12	C	Active	3	12	CK	SA
1-CKV-61-662	ICE CONDENSER FLOOR DRAIN GATE 5	1-47W814-2 / D-12	C	Active	3	12	CK	SA
1-CKV-61-663	ICE CONDENSER FLOOR DRAIN GATE 6	1-47W814-2 / D-12	C	Active	3	12	CK	SA
1-CKV-61-664	ICE CONDENSER FLOOR DRAIN GATE 7	1-47W814-2 / D-12	C	Active	3	12	CK	SA
1-CKV-61-665	ICE CONDENSER FLOOR DRAIN GATE 8	1-47W814-2 / D-12	C	Active	3	12	CK	SA
1-CKV-61-666	ICE CONDENSER FLOOR DRAIN GATE 9	1-47W814-2 / D-12	C	Active	3	12	CK	SA
1-CKV-61-667	ICE CONDENSER FLOOR DRAIN GATE 10	1-47W814-2 / D-12	C	Active	3	12	CK	SA
1-CKV-61-668	ICE CONDENSER FLOOR DRAIN GATE 11	1-47W814-2 / D-12	C	Active	3	12	CK	SA
1-CKV-61-669	ICE CONDENSER FLOOR DRAIN GATE 12	1-47W814-2 / D-12	C	Active	3	12	CK	SA
1-CKV-61-670	ICE CONDENSER FLOOR DRAIN GATE 13	1-47W814-2 / D-12	C	Active	3	12	CK	SA
1-CKV-61-671	ICE CONDENSER FLOOR DRAIN GATE 14	1-47W814-2 / D-12	C	Active	3	12	CK	SA
1-CKV-61-672	ICE CONDENSER FLOOR DRAIN GATE 15	1-47W814-2 / D-12	C	Active	3	12	CK	SA
1-CKV-61-673	ICE CONDENSER FLOOR DRAIN GATE 16	1-47W814-2 / D-12	C	Active	3	12	CK	SA
1-CKV-61-674	ICE CONDENSER FLOOR DRAIN GATE 17	1-47W814-2 / D-12	C	Active	3	12	CK	SA
1-CKV-61-675	ICE CONDENSER FLOOR DRAIN GATE 18	1-47W814-2 / D-12	C	Active	3	12	CK	SA
1-CKV-61-676	ICE CONDENSER FLOOR DRAIN GATE 19	1-47W814-2 / D-12	C	Active	3	12	CK	SA
1-CKV-61-677	ICE CONDENSER FLOOR DRAIN GATE 20	1-47W814-2 / D-12	C	Active	3	12	CK	SA
2-CKV-61-658	ICE CONDENSER FLOOR DRAIN GATE 1	2-47W814-2 / D-12	C	Active	3	12	CK	SA
2-CKV-61-659	ICE CONDENSER FLOOR DRAIN GATE 2	2-47W814-2 / D-12	C	Active	3	12	CK	SA
2-CKV-61-660	ICE CONDENSER FLOOR DRAIN GATE 3	2-47W814-2 / D-12	C	Active	3	12	CK	SA
2-CKV-61-661	ICE CONDENSER FLOOR DRAIN GATE 4	2-47W814-2 / D-12	C	Active	3	12	CK	SA
2-CKV-61-662	ICE CONDENSER FLOOR DRAIN GATE 5	2-47W814-2 / D-12	C	Active	3	12	CK	SA

Appendix E - Deferred Test Justifications

Deferred Test Justification: DTJ-10

Valve ID	Function	Drawing / Coor	Cat	Act/Pass	Class	Size	Type	Act
2-CKV-61-663	ICE CONDENSER FLOOR DRAIN GATE 6	2-47W814-2 / D-12	C	Active	3	12	CK	SA
2-CKV-61-664	ICE CONDENSER FLOOR DRAIN GATE 7	2-47W814-2 / D-12	C	Active	3	12	CK	SA
2-CKV-61-665	ICE CONDENSER FLOOR DRAIN GATE 8	2-47W814-2 / D-12	C	Active	3	12	CK	SA
2-CKV-61-666	ICE CONDENSER FLOOR DRAIN GATE 9	2-47W814-2 / D-12	C	Active	3	12	CK	SA
2-CKV-61-667	ICE CONDENSER FLOOR DRAIN GATE 10	2-47W814-2 / D-12	C	Active	3	12	CK	SA
2-CKV-61-668	ICE CONDENSER FLOOR DRAIN GATE 11	2-47W814-2 / D-12	C	Active	3	12	CK	SA
2-CKV-61-669	ICE CONDENSER FLOOR DRAIN GATE 12	2-47W814-2 / D-12	C	Active	3	12	CK	SA
2-CKV-61-670	ICE CONDENSER FLOOR DRAIN GATE 13	2-47W814-2 / D-12	C	Active	3	12	CK	SA
2-CKV-61-671	ICE CONDENSER FLOOR DRAIN GATE 14	2-47W814-2 / D-12	C	Active	3	12	CK	SA
2-CKV-61-672	ICE CONDENSER FLOOR DRAIN GATE 15	2-47W814-2 / D-12	C	Active	3	12	CK	SA
2-CKV-61-673	ICE CONDENSER FLOOR DRAIN GATE 16	2-47W814-2 / D-12	C	Active	3	12	CK	SA
2-CKV-61-674	ICE CONDENSER FLOOR DRAIN GATE 17	2-47W814-2 / D-12	C	Active	3	12	CK	SA
2-CKV-61-675	ICE CONDENSER FLOOR DRAIN GATE 18	2-47W814-2 / D-12	C	Active	3	12	CK	SA
2-CKV-61-676	ICE CONDENSER FLOOR DRAIN GATE 19	2-47W814-2 / D-12	C	Active	3	12	CK	SA
2-CKV-61-677	ICE CONDENSER FLOOR DRAIN GATE 20	2-47W814-2 / D-12	C	Active	3	12	CK	SA

Required Test Frequency: Check Valve Open (CVO) on a Quarterly (Q) frequency.
Check Valve Bi-directional Close (BDC) on a Quarterly (Q) frequency.

Deferred Test Frequency: Check Valve Open (CVO) on a Refueling Outage (RO) frequency.
Check Valve Bi-directional Close (BDC) on a Refueling Outage (RO) frequency.

Justification for Deferred Test Frequency: Valves are installed on the end of the ice condenser drains inside the polar crane wall in the lower compartment. Radiation levels in this area during operation prevent entry. The drains are located some distance from the floor, requiring the construction of scaffolding to reach. Therefore it is impractical to try to test the valves during a cold shutdown.

Appendix E - Deferred Test Justifications

Deferred Test Justification: DTJ-11

Valve ID	Function	Drawing / Coor	Cat	Act/Pass	Class	Size	Type	Act
1-CKV-62-504	RWST TO CVCS CHG PUMP SUCTION CHECK	1-47W809-1 / H-10	C	Active	2	8	CK	SA
1-CKV-62-525	CCP 1A-A DISCHARGE CHECK	1-47W809-1 / G-9	A/C	Active	2	4	CK	SA
1-CKV-62-532	CCP 1B-B DISCHARGE CHECK	1-47W809-1 / F-9	A/C	Active	2	4	CK	SA
1-CKV-63-510	RWST TO SAFETY INJ PUMP SUCTION CHECK	1-47W811-1 / D-10	C	Active	2	8	CK	SA
1-CKV-63-524	SAFETY INJ PUMP 1A-A DISCHARGE CHECK	1-47W811-1 / F-8	A/C	Active	2	4	CK	SA
1-CKV-63-526	SAFETY INJ PUMP 1B-B DISCHARGE CHECK	1-47W811-1 / D-8	A/C	Active	2	4	CK	SA
1-CKV-63-543	HOT LEG 1 SAFETY INJ CHECK	1-47W811-1 / F-3	A/C	Active	1	2	CK	SA
1-CKV-63-545	HOT LEG 3 SAFETY INJ CHECK	1-47W811-1 / F-3	A/C	Active	1	2	CK	SA
1-CKV-63-547	HOT LEG 2 SAFETY INJ CHECK	1-47W811-1 / E-3	A/C	Active	1	2	CK	SA
1-CKV-63-549	HOT LEG 4 SAFETY INJ CHECK	1-47W811-1 / E-3	A/C	Active	1	2	CK	SA
1-CKV-63-551	COLD LEG 1 SAFETY INJ CHECK	1-47W811-1 / H-1	A/C	Active	1	2	CK	SA
1-CKV-63-553	COLD LEG 2 SAFETY INJ CHECK	1-47W811-1 / H-3	A/C	Active	1	2	CK	SA
1-CKV-63-555	COLD LEG 3 SAFETY INJ CHECK	1-47W811-1 / G-3	A/C	Active	1	2	CK	SA
1-CKV-63-557	COLD LEG 4 SAFETY INJ CHECK	1-47W811-1 / G-2	A/C	Active	1	2	CK	SA
1-CKV-63-558	HOT LEG 4 SAFETY INJ CHECK	1-47W811-1 / E-2	A/C	Active	1	6	CK	SA
1-CKV-63-559	HOT LEG 2 SAFETY INJ CHECK	1-47W811-1 / E-1	A/C	Active	1	6	CK	SA
1-CKV-63-581	BORON INJ LINE CHECK	1-47W811-1 / C-6	A/C	Active	1	3	CK	SA
1-CKV-63-586	COLD LEG 1 BORON INJ CHECK	1-47W811-1 / E-1	A/C	Active	1	1.5	CK	SA
1-CKV-63-587	COLD LEG 2 BORON INJ CHECK	1-47W811-1 / D-2	A/C	Active	1	1.5	CK	SA
1-CKV-63-588	COLD LEG 3 BORON INJ CHECK	1-47W811-1 / E-2	A/C	Active	1	1.5	CK	SA
1-CKV-63-589	COLD LEG 4 BORON INJ CHECK	1-47W811-1 / F-2	A/C	Active	1	1.5	CK	SA
2-CKV-62-504	RWST TO CVCS CHG PUMP SUCTION CHECK	2-47W809-1 / G-9	C	Active	2	8	CK	SA
2-CKV-62-525	CCP 2A-A DISCHARGE CHECK	2-47W809-1 / G-8	A/C	Active	2	4	CK	SA
2-CKV-62-532	CCP 2B-B DISCHARGE CHECK	2-47W809-1 / F-8	A/C	Active	2	4	CK	SA
2-CKV-63-510	RWST TO SAFETY INJ PUMP SUCTION CHECK	2-47W811-1 / D-9	C	Active	2	8	CK	SA
2-CKV-63-524	SAFETY INJ PUMP 2A-A DISCHARGE CHECK	2-47W811-1 / E-8	A/C	Active	2	4	CK	SA
2-CKV-63-526	SAFETY INJ PUMP 2B-B DISCHARGE CHECK	2-47W811-1 / D-8	A/C	Active	2	4	CK	SA
2-CKV-63-543	HOT LEG 1 SAFETY INJ CHECK	2-47W811-1 / F-3	A/C	Active	1	2	CK	SA
2-CKV-63-545	HOT LEG 3 SAFETY INJ CHECK	2-47W811-1 / F-3	A/C	Active	1	2	CK	SA
2-CKV-63-547	HOT LEG 2 SAFETY INJ CHECK	2-47W811-1 / E-3	A/C	Active	1	2	CK	SA
2-CKV-63-549	HOT LEG 4 SAFETY INJ CHECK	2-47W811-1 / E-3	A/C	Active	1	2	CK	SA

Appendix E - Deferred Test Justifications

Deferred Test Justification: DTJ-11

Valve ID	Function	Drawing / Coor	Cat	Act/Pass	Class	Size	Type	Act
2-CKV-63-551	COLD LEG 1 SAFETY INJ CHECK	2-47W811-1 / H-1	A/C	Active	1	2	CK	SA
2-CKV-63-553	COLD LEG 2 SAFETY INJ CHECK	2-47W811-1 / H-3	A/C	Active	1	2	CK	SA
2-CKV-63-555	COLD LEG 3 SAFETY INJ CHECK	2-47W811-1 / G-3	A/C	Active	1	2	CK	SA
2-CKV-63-557	COLD LEG 4 SAFETY INJ CHECK	2-47W811-1 / G-2	A/C	Active	1	2	CK	SA
2-CKV-63-558	HOT LEG 4 SAFETY INJ CHECK	2-47W811-1 / E-2	A/C	Active	1	6	CK	SA
2-CKV-63-559	HOT LEG 2 SAFETY INJ CHECK	2-47W811-1 / E-1	A/C	Active	1	6	CK	SA
2-CKV-63-581	BORON INJ LINE CHECK	2-47W811-1 / C-6	A/C	Active	1	3	CK	SA
2-CKV-63-586	COLD LEG 1 BORON INJ CHECK	2-47W811-1 / E-1	A/C	Active	1	1.5	CK	SA
2-CKV-63-587	COLD LEG 2 BORON INJ CHECK	2-47W811-1 / D-2	A/C	Active	1	1.5	CK	SA
2-CKV-63-588	COLD LEG 3 BORON INJ CHECK	2-47W811-1 / E-2	A/C	Active	1	1.5	CK	SA
2-CKV-63-589	COLD LEG 4 BORON INJ CHECK	2-47W811-1 / F-2	A/C	Active	1	1.5	CK	SA

Required Test Frequency: Check Valve Open (CVO) on a Quarterly (Q) frequency.
Check Valve Closure (CVC) on a Quarterly (Q) frequency.

Deferred Test Frequency: Check Valve Open (CVO) on a Refueling Outage (RO) frequency.
Check Valve Closure (CVC) on a Refueling Outage (RO) frequency.

Justification for Deferred Test Frequency: The centrifugal charging pumps cannot be run at full flow through their associated valves without causing undesirable RCS temperature and/or boron concentration changes resulting in changes in reactivity during operations which could result in a plant trip and subsequent safety injection actuation or causing undesirable thermal cyclic stresses which would eventually use all of the design basis for thermal cycles due to a Safety Injection. The safety injection pumps do NOT develop sufficient head to deliver flow to the reactor vessel during normal operation. Letdown capacity precludes testing during MODE 5 without compromising cold over pressure protection provisions. Full stroke exercising 1(2)-CKV-62-504-S or 1(2)-CKV-63-510-S to the closed position renders both trains of their respective systems inoperable.

Appendix E - Deferred Test Justifications

Deferred Test Justification: DTJ-12

Valve ID	Function	Drawing / Coor	Cat	Act/Pass	Class	Size	Type	Act
1-FCV-67-123	CNTMT SPRAY HX 1B-B ERCW SUPPLY	0-47W845-2 / D-9	B	Active	3	18	BF	MO
1-FCV-67-124	CNTMT SPRAY HX 1B-B ERCW RETURN	0-47W845-2 / E-8	B	Active	3	18	BF	MO
1-FCV-67-125	CNTMT SPRAY HX 1A-A ERCW SUPPLY	0-47W845-2 / C-9	B	Active	3	18	BF	MO
1-FCV-67-126	CNTMT SPRAY HX 1A-A ERCW RETURN	0-47W845-2 / D-7	B	Active	3	18	BF	MO
2-FCV-67-123	CNTMT SPRAY HX 2B-B ERCW SUPPLY	0-47W845-2 / D-2	B	Active	3	18	BF	MO
2-FCV-67-124	CNTMT SPRAY HX 2B-B ERCW RETURN	0-47W845-2 / E-3	B	Active	3	18	BF	MO
2-FCV-67-125	CNTMT SPRAY HX 2A-A ERCW SUPPLY	0-47W845-2 / C-3	B	Active	3	18	BF	MO
2-FCV-67-126	CNTMT SPRAY HX 2A-A ERCW RETURN	0-47W845-2 / D-4	B	Active	3	18	BF	MO

Required Test Frequency: Full stroke exercise with stroke time open (STO) on a Quarterly (Q) frequency.
Full stroke exercise with stroke time closed (STC) on a Quarterly (Q) frequency.

Deferred Test Frequency: Full stroke exercise with stroke time open (STO) on a Cold Shutdown (CSD) frequency.
Full stroke exercise with stroke time closed (STC) on a Cold Shutdown (CSD) frequency.

Justification for Deferred Test Frequency: Opening these valves allows river water from ERCW to enter the heat exchangers. As a result, the lay-up water chemistry [such as chloride content] cannot be maintained without draining and refilling the heat exchangers followed by recirculating the water through a portable demineralizer.

Appendix E - Deferred Test Justifications

Deferred Test Justification: DTJ-13

Valve ID	Function	Drawing / Coor	Cat	Act/Pass	Class	Size	Type	Act
1-CKV-62-504	RWST TO CVCS CHG PUMP SUCTION CHECK	1-47W809-1 / H-10	C	Active	2	8	CK	SA

Required Test Frequency: N/A

Deferred Test Frequency: N/A

Justification for Deferred Test Frequency: N/A

Appendix E - Deferred Test Justifications

Deferred Test Justification: DTJ-14

Valve ID	Function	Drawing / Coor	Cat	Act/Pass	Class	Size	Type	Act
1-FCV-62-61	CVCS SEAL WATER RETURN HEADER ISOL	1-47W809-1 / B-7	A	Active	2	4	GA	MO
1-FCV-62-63	CVCS SEAL WATER RETURN HEADER ISOL	1-47W809-1 / B-8	A	Active	2	4	GA	MO
2-FCV-62-61	CVCS SEAL WATER RETURN HEADER ISOL	2-47W809-1 / B-6	A	Active	2	4	GA	MO
2-FCV-62-63	CVCS SEAL WATER RETURN HEADER ISOL	2-47W809-1 / B-7	A	Active	2	4	GA	MO

Required Test Frequency: Full stroke exercise with stroke time closed (STC) on a Quarterly (Q) frequency.

Deferred Test Frequency: Full stroke exercise with stroke time closed (STC) on a Refueling Outage (RO) frequency.

Justification for Deferred Test Frequency: Exercising valves during operation of the RCPs challenges a seal water return relief valve and could cause loss of seal water and potentially damage the reactor coolant pump seals. Damage to the RCP seals would result in high seal losses with resultant maintenance, contamination and clean up problems. Stopping the RCPs for testing would increase the wear and stress on the RCPs, increase the number of cycles on other plant equipment, and could extend the length of cold shutdown outages. NUREG-1482 Section 3.1.1.4 states that licensees need not schedule valve testing that requires stopping and restarting the RCPs during each cold shutdown solely to allow for the testing of such valves.

Appendix E - Deferred Test Justifications

Deferred Test Justification: DTJ-15

Valve ID	Function	Drawing / Coor	Cat	Act/Pass	Class	Size	Type	Act
1-FCV-62-69	CVCS LETDOWN ISOLATION	1-47W809-1 / A-2	B	Active	1	3	GL	AO
1-FCV-62-70	CVCS LETDOWN ISOLATION	1-47W809-1 / A-2	B	Active	1	3	GL	AO
1-FCV-62-77	CVCS LP LETDOWN ISOL	1-47W809-1 / A-7	A	Active	2	2	GL	AO
1-FCV-62-90	CVCS CHARGING HEADER ISOLATION	1-47W809-1 / D-8	B	Active	2	3	GA	MO
1-FCV-62-91	CVCS CHARGING HEADER ISOLATION	1-47W809-1 / D-8	B	Active	2	3	GA	MO
2-FCV-62-69	CVCS LETDOWN ISOLATION	2-47W809-1 / A-2	B	Active	1	3	GL	AO
2-FCV-62-70	CVCS LETDOWN ISOLATION	2-47W809-1 / A-2	B	Active	1	3	GL	AO
2-FCV-62-77	CVCS LP LETDOWN ISOL	2-47W809-1 / A-7	A	Active	2	2	GL	AO
2-FCV-62-90	CVCS CHARGING HEADER ISOLATION	2-47W809-1 / D-7	B	Active	2	3	GA	MO
2-FCV-62-91	CVCS CHARGING HEADER ISOLATION	2-47W809-1 / D-7	B	Active	2	3	GA	MO

Required Test Frequency:
All Valves
Full stroke exercise with stroke time closed (STC) on a Quarterly (Q) frequency.

Valves 1(2)-FCV-62-69, 1(2)-FCV-62-70, 1(2)-FCV-62-77
Fail Safe Close (FSC) on a Quarterly (Q) frequency.

Deferred Test Frequency:
All Valves
Full stroke exercise with stroke time closed (STC) on a Cold Shutdown (CSD) frequency.

Valves 1(2)-FCV-62-69, 1(2)-FCV-62-70, 1(2)-FCV-62-77
Fail Safe Close (FSC) on a Cold Shutdown (CSD) frequency.

Justification for Deferred Test Frequency:
Exercising these valves to the position required to fulfill their safety function causes a loss of flow in either the charging or letdown portions of the Chemical and Volume Control System. As described in the Westinghouse letter to TVA, WAT D 8347 (RIMS T33 911231 810), isolation of the charging and letdown lines during operation can result in a thermal transient at the charging nozzle of from 500 degrees F to 70 degrees F in a two to five minute period. This results in an increase in the fatigue usage factor beyond that assumed for the original design analysis of these systems.

Appendix E - Deferred Test Justifications

Deferred Test Justification: DTJ-16

Valve ID	Function	Drawing / Coor	Cat	Act/Pass	Class	Size	Type	Act
1-FCV-62-1228	CCP SUCTION TO VCT VENT HDR ISOL	1-47W809-1 / C-10	B	Active	2	1	GL	AO
1-FCV-62-1229	CCP SUCTION TO VCT VENT HDR ISOL	1-47W809-1 / C-10	B	Active	2	1	GL	AO
1-LCV-62-132	VOLUME CONTROL TANK OUTLET ISOLATION	1-47W809-1 / D-10	B	Active	2	4	GA	MO
1-LCV-62-133	VOLUME CONTROL TANK OUTLET ISOLATION	1-47W809-1 / D-10	B	Active	2	4	GA	MO
1-LCV-62-135	RWST CVCS SUPPLY HDR ISOLATION	1-47W809-1 / H-10	B	Active	2	8	GA	MO
1-LCV-62-136	RWST CVCS SUPPLY HDR ISOLATION	1-47W809-1 / H-10	B	Active	2	8	GA	MO
2-FCV-62-1228	CCP SUCTION TO VCT VENT HDR ISOL	2-47W809-1 / C-10	B	Active	2	1	GL	AO
2-FCV-62-1229	CCP SUCTION TO VCT VENT HDR ISOL	2-47W809-1 / C-10	B	Active	2	1	GL	AO
2-LCV-62-132	VOLUME CONTROL TANK OUTLET ISOLATION	2-47W809-1 / E-9	B	Active	2	4	GA	MO
2-LCV-62-133	VOLUME CONTROL TANK OUTLET ISOLATION	2-47W809-1 / E-9	B	Active	2	4	GA	MO
2-LCV-62-135	RWST CVCS SUPPLY HDR ISOLATION	2-47W809-1 / H-9	B	Active	2	8	GA	MO
2-LCV-62-136	RWST CVCS SUPPLY HDR ISOLATION	2-47W809-1 / H-9	B	Active	2	8	GA	MO

Required Test Frequency:

All Valves
Full stroke exercise with stroke time closed (STC) on a Quarterly (Q) frequency.

Valves 1(2)-FCV-62-1228, 1(2)-FCV-62-1229
Fail Safe Close (FSC) on a Quarterly (Q) frequency.

Valves 1(2)-LCV-62-135, 1(2)-LCV-62-136
Full stroke exercise with stroke time open (STO) on a Quarterly (Q) frequency.

Deferred Test Frequency:

All Valves
Full stroke exercise with stroke time closed (STC) on a Cold Shutdown (CSD) frequency.

Valves 1(2)-FCV-62-1228, 1(2)-FCV-62-1229
Fail Safe Close (FSC) on a Cold Shutdown (CSD) frequency.

Valves 1(2)-LCV-62-135, 1(2)-LCV-62-136
Full stroke exercise with stroke time open (STO) on a Cold Shutdown (CSD) frequency.

Appendix E - Deferred Test Justifications

Justification for Deferred Test Frequency: The air-operated Volume Control Tank (VCT) hydrogen vent valves are electrically interlocked to close when VCT outlets (62-132 for 1228 or 133 for 1229) close. Each valve has a separate handswitch (HS) which is normally in the ON position. While in the ON position, a concurrent signal from LCV-62-132 (1228) or LCV-62-133 (1229) will position the affected valve open or closed as a slave to the affected LCV. Placing HS-62-1228/1229 to OFF fails the valve closed and prevents the LCV signal from operating 1228/1229, but also de-energizes the position indicating lights which are used to time the valves.

Cycling the VCT outlet isolation valves (62-132/133) opens the RWST CVCS supply valves (62-135/136), which preconditions them and results in the charging pump taking suction from the RWST for normal charging requirements. This will result in addition of borated water which has a different boron concentration than that in the reactor coolant system since the likelihood of both the RWST and the RCS being at the same boron concentration at the same time is very small. The change in boron concentration in the RCS caused by charging from the RWST during testing would cause unstable unit operation, especially if any of the valves failed to return to their normal position.

Appendix E - Deferred Test Justifications

Deferred Test Justification: DTJ-17

Valve ID	Function	Drawing / Coor	Cat	Act/Pass	Class	Size	Type	Act
1-FCV-74-1	LOOP 4 HOT LEG TO RHR SUCTION	1-47W810-1 / G-2	A	Active	1	14	GA	MO
1-FCV-74-2	LOOP 4 HOT LEG TO RHR SUCTION	1-47W810-1 / G-3	A	Active	1	14	GA	MO
1-FCV-74-8	1-FCV-74-2 BYPASS RHR SUCTION	1-47W810-1 / G-3	A	Active	1	10	GA	MO
1-FCV-74-9	1-FCV-74-1 BYPASS RHR SUCTION	1-47W810-1 / G-2	A	Active	1	10	GA	MO
2-FCV-74-1	LOOP 4 HOT LEG TO RHR SUCTION	2-47W810-1 / G-2	A	Active	1	14	GA	MO
2-FCV-74-2	LOOP 4 HOT LEG TO RHR SUCTION	2-47W810-1 / G-3	A	Active	1	14	GA	MO
2-FCV-74-8	2-FCV-74-2 BYPASS RHR SUCTION	2-47W810-1 / H-3	A	Active	1	10	GA	MO
2-FCV-74-9	2-FCV-74-1 BYPASS RHR SUCTION	2-47W810-1 / G-2	A	Active	1	10	GA	MO

Required Test Frequency: Full stroke exercise with stroke time closed (STC) on a Quarterly (Q) frequency.
Full stroke exercise with stroke time open (STO) on a Quarterly (Q) frequency.

Deferred Test Frequency: Full stroke exercise with stroke time closed (STC) on a Cold Shutdown (CSD) frequency.
Full stroke exercise with stroke time open (STO) on a Cold Shutdown (CSD) frequency.

Justification for Deferred Test Frequency: Exercising the valve during operation would result in over pressurizing the RHR piping, causing a loss of both trains of a safety system.

Appendix E - Deferred Test Justifications

Deferred Test Justification: DTJ-18

Valve ID	Function	Drawing / Coor	Cat	Act/Pass	Class	Size	Type	Act
1-CKV-63-502	RWST TO RHR SUCTION CHECK	1-47W811-1 / F-10	C	Active	2	12	CK	SA
1-CKV-63-632	COLD LEG 2 RHR INJ LINE CHECK	1-47W811-1 / H-2	A/C	Active	1	6	CK	SA
1-CKV-63-633	COLD LEG 1 RHR INJ LINE CHECK	1-47W811-1 / G-1	A/C	Active	1	6	CK	SA
1-CKV-63-634	COLD LEG 3 RHR INJ LINE CHECK	1-47W811-1 / G-3	A/C	Active	1	6	CK	SA
1-CKV-63-635	COLD LEG 4 RHR INJ LINE CHECK	1-47W811-1 / G-1	A/C	Active	1	6	CK	SA
1-CKV-63-640	HOT LEG 1 RHR INJ LINE CHECK	1-47W811-1 / G-3	A/C	Active	1	8	CK	SA
1-CKV-63-641	1-CKV-63-641 HOT LEG 1 INJ HEADER CHECK	1-47W811-1 / F-1	A/C	Active	1	6	CK	SA
1-CKV-63-643	HOT LEG 3 RHR INJ LINE CHECK	1-47W811-1 / F-3	A/C	Active	1	8	CK	SA
1-CKV-63-644	HOT LEG 3 INJ HEADER CHECK	1-47W811-1 / D-2	A/C	Active	1	6	CK	SA
1-CKV-74-514	RHR PUMP 1A-A DISCHARGE CHECK	1-47W810-1 / F-8	C	Active	2	8	CK	SA
1-CKV-74-515	RHR PUMP 1B-B DISCHARGE CHECK	1-47W810-1 / C-8	C	Active	2	8	CK	SA
2-CKV-63-502	RWST TO RHR SUCTION CHECK	2-47W811-1 / F-9	C	Active	2	12	CK	SA
2-CKV-63-632	COLD LEG 2 RHR INJ LINE CHECK	2-47W811-1 / G-2	A/C	Active	1	6	CK	SA
2-CKV-63-633	COLD LEG 1 RHR INJ LINE CHECK	2-47W811-1 / G-1	A/C	Active	1	6	CK	SA
2-CKV-63-634	COLD LEG 3 RHR INJ LINE CHECK	2-47W811-1 / G-3	A/C	Active	1	6	CK	SA
2-CKV-63-635	COLD LEG 4 RHR INJ LINE CHECK	2-47W811-1 / G-1	A/C	Active	1	6	CK	SA
2-CKV-63-640	HOT LEG 1 RHR INJ LINE CHECK	2-47W811-1 / G-3	A/C	Active	1	8	CK	SA
2-CKV-63-641	2-CKV-63-641 HOT LEG 1 INJ HEADER CHECK	2-47W811-1 / F-1	A/C	Active	1	6	CK	SA
2-CKV-63-643	HOT LEG 3 RHR INJ LINE CHECK	2-47W811-1 / F-3	A/C	Active	1	8	CK	SA
2-CKV-63-644	HOT LEG 3 INJ HEADER CHECK	2-47W811-1 / D-2	A/C	Active	1	6	CK	SA
2-CKV-74-514	RHR PUMP 2A-A DISCHARGE CHECK	2-47W810-1 / F-8	C	Active	2	8	CK	SA
2-CKV-74-515	RHR PUMP 2B-B DISCHARGE CHECK	2-47W810-1 / C-8	C	Active	2	8	CK	SA

Required Test Frequency: Check Valve Closure (CVC) on a Quarterly (Q) frequency.
Check Valve Open (CVO) on a Quarterly (Q) frequency.

Deferred Test Frequency: Check Valve Closure (CVC) on a Refueling Outage (RO) frequency.
Check Valve Open (CVO) on a Refueling Outage (RO) frequency.

Justification for Deferred Test Frequency: The RHR pumps do NOT develop sufficient head to open the valves during power operation. With the RHR pump suction being supplied from the normal loop 4 suction path during shutdown and discharging to a closed vessel, the pumps cannot develop sufficient flow to satisfy the full flow requirements for the check valves. In order to achieve full flow, the vessel must be open and the pump suction taken from the RWST. Valves 1(2)-CKV-74-514-A and 1(2)-CKV-74-515-B cannot be exposed to the pressure of a running RHR pump during plant operation without opening 1(2)-HCV-74-36 and 1(2)-HCV-74-37. Opening these valves or back seating 1(2)-CKV-63-502S adversely affects both trains of a safety system.

Appendix E - Deferred Test Justifications

Deferred Test Justification: DTJ-19

Valve ID	Function	Drawing / Coor	Cat	Act/Pass	Class	Size	Type	Act
1-FCV-63-1	RWST TO RHR SUCTION	1-47W811-1 / E-10	B	Active	2	14	GA	MO
1-FCV-63-5	RWST TO SI PUMP SUCTION ISOL	1-47W811-1 / D-10	B	Active	2	6	GA	MO
2-FCV-63-1	RWST TO RHR SUCTION	2-47W811-1 / E-10	B	Active	2	14	GA	MO
2-FCV-63-5	RWST TO SI PUMP SUCTION ISOL	2-47W811-1 / D-9	B	Active	2	6	GA	MO

Required Test Frequency: Full stroke exercise with stroke time open (STO) on a Quarterly (Q) frequency.
Full stroke exercise with stroke time closed (STC) on a Quarterly (Q) frequency.

Deferred Test Frequency: Full stroke exercise with stroke time open (STO) on a Cold Shutdown (CSD) frequency.
Full stroke exercise with stroke time closed (STC) on a Cold Shutdown (CSD) frequency.

Justification for Deferred Test Frequency: Exercising valve during operation results in losing suction from RWST to both trains of a safety system. If valve fails to reopen both trains of the affected safety system would be made inoperable.

Appendix E - Deferred Test Justifications

Deferred Test Justification: DTJ-20

Valve ID	Function	Drawing / Coor	Cat	Act/Pass	Class	Size	Type	Act
1-FCV-63-3	SI PUMP MINI FLOW RECIRC HDR TO RWST ISOL	1-47W811-1 / E-8	B	Active	2	2	GL	MO
2-FCV-63-3	SI PUMP MINI FLOW RECIRC HDR TO RWST ISOL	2-47W811-1 / E-7	B	Active	2	2	GL	MO

Required Test Frequency: Full stroke exercise with stroke time open (STO) on a Quarterly (Q) frequency.
Full stroke exercise with stroke time closed (STC) on a Quarterly (Q) frequency.

Deferred Test Frequency: Full stroke exercise with stroke time open (STO) on a Cold Shutdown (CSD) frequency.
Full stroke exercise with stroke time closed (STC) on a Cold Shutdown (CSD) frequency.

Justification for Deferred Test Frequency: Exercising valve during operation results in isolating the recirculation line to both trains of safety injection pumps. Failure of the valve to reopen would make both trains of a safety system inoperable.

Deferred Test Justification: DTJ-21

Valve ID	Function	Drawing / Coor	Cat	Act/Pass	Class	Size	Type	Act
1-FCV-63-11	RHR HX 1B-B OUTLET TO SIP 1B-B SUCT ISOL	1-47W811-1 / F-9	B	Active	2	8	GA	MO
1-FCV-63-8	RHR PMP 1A-A TO CHG PMP & SIP 1A-A SUCT ISOL	1-47W811-1 / H-9	B	Active	2	8	GA	MO
2-FCV-63-11	RHR HX 2B-B OUTLET TO SIP 2B-B SUCT ISOL	2-47W811-1 / F-9	B	Active	2	8	GA	MO
2-FCV-63-8	RHR PMP 2A-A TO CHG PMP & SIP 2A-A SUCT ISOL	2-47W811-1 / G-9	B	Active	2	8	GA	MO

Required Test Frequency: Full stroke exercise with stroke time open (STO) on a Quarterly (Q) frequency.
Full stroke exercise with stroke time closed (STC) on a Quarterly (Q) frequency.

Deferred Test Frequency: Full stroke exercise with stroke time open (STO) on a Refueling Outage (RO) frequency.
Full stroke exercise with stroke time closed (STC) on a Refueling Outage (RO) frequency.

Justification for Deferred Test Frequency: Both valves are electrically interlocked with the safety injection pump recirculation isolation valves 1(2)-FCV-63-3-A, 1(2)-FCV-63-4-B and 1(2)-FCV-63-175-B in such a manner that both trains of the Safety Injection System will have their minimum flow recirculation path isolated to cycle either valve. Isolation of these recirculation paths adversely affects both trains of a safety system and could cause failure of both trains. Additionally, the valves are interlocked with the containment sump suction valves in such a manner that they must be fully open to allow these valves to operate. Opening the containment sump valves during operation requires either draining an extensive portion of the RHR system or allowing it to drain to the containment sump. Draining and refilling these lines requires a considerable amount of time and could extend forced outage duration. Allowing the affected piping to drain to the sump requires extensive cleanup time. Therefore testing during forced outages is NOT practical. [See also DTJ-24]

Appendix E - Deferred Test Justifications

Deferred Test Justification: DTJ-22

Valve ID	Function	Drawing / Coor	Cat	Act/Pass	Class	Size	Type	Act
1-FCV-63-22	SI PUMPS TO COLD LEG INJECTION	1-47W811-1 / E-6	B	Active	2	4	GA	MO
2-FCV-63-22	SI PUMPS TO COLD LEG INJECTION	2-47W811-1 / E-6	B	Active	2	4	GA	MO

Required Test Frequency: Full stroke exercise with stroke time open (STO) on a Quarterly (Q) frequency.
Full stroke exercise with stroke time closed (STC) on a Quarterly (Q) frequency.

Deferred Test Frequency: Full stroke exercise with stroke time open (STO) on a Cold Shutdown (CSD) frequency.
Full stroke exercise with stroke time closed (STC) on a Cold Shutdown (CSD) frequency.

Justification for Deferred Test Frequency: Exercising valve during operation isolates both trains of safety injection from their normal flow path to the cold legs. Failure of the valve to reopen results in total loss of system function.

Appendix E - Deferred Test Justifications

Deferred Test Justification: DTJ-23

Valve ID	Function	Drawing / Coor	Cat	Act/Pass	Class	Size	Type	Act
1-FCV-63-25	SIS BORON INJ TANK OUTLET ISOLATION	1-47W811-1 / B-7	B	Active	2	4	GA	MO
1-FCV-63-26	SIS BORON INJ TANK OUTLET ISOLATION	1-47W811-1 / B-7	B	Active	2	4	GA	MO
2-FCV-63-25	SIS BORON INJ TANK OUTLET ISOLATION	2-47W811-1 / B-7	B	Active	2	4	GA	MO
2-FCV-63-26	SIS BORON INJ TANK OUTLET ISOLATION	2-47W811-1 / B-7	B	Active	2	4	GA	MO

Required Test Frequency: Full stroke exercise with stroke time open (STO) on a Quarterly (Q) frequency.
Full stroke exercise with stroke time closed (STC) on a Quarterly (Q) frequency.

Deferred Test Frequency: Full stroke exercise with stroke time open (STO) on a Cold Shutdown (CSD) frequency.
Full stroke exercise with stroke time closed (STC) on a Cold Shutdown (CSD) frequency.

Justification for Deferred Test Frequency: Charging header pressure during normal operation exceeds the pressure downstream of the check valves associated with these FCVs. If the FCVs are opened for testing, the pressure in the charging header will initiate flow through the high head safety injection system piping. This will:

1) Cause Pressurizer level transients, due to the additional water being added to the RCS, which will cause unstable operation and may result in unit trip and subsequent initiation of the entire safety injection system.

2) Cause a thermal stress transient in the associated piping which will have to be counted as one of the limited number of safety injection system actuations permitted during the design life of the plant.

Appendix E - Deferred Test Justifications

Deferred Test Justification: DTJ-24

Valve ID	Function	Drawing / Coor	Cat	Act/Pass	Class	Size	Type	Act
1-FCV-63-72	CONTAINMENT SUMP TO RHR PUMP 1A-A ISOL	1-47W811-1 / H-7	B	Active	2	18	GA	MO
1-FCV-63-73	CONTAINMENT SUMP TO RHR PUMP 1B-B ISOL	1-47W811-1 / H-7	B	Active	2	18	GA	MO
1-FCV-72-44	CNTMT SUMP TO CS PUMP 1A-A SUCTION	1-47W812-1 / G-3	B	Active	2	12	GA	MO
1-FCV-72-45	CNTMT SUMP TO CS PUMP 1B-B SUCTION	1-47W812-1 / H-3	B	Active	2	12	GA	MO
2-FCV-63-72	CONTAINMENT SUMP TO RHR PUMP 2A-A ISOL	2-47W811-1 / H-7	B	Active	2	18	GA	MO
2-FCV-63-73	CONTAINMENT SUMP TO RHR PUMP 2B-B ISOL	2-47W811-1 / G-7	B	Active	2	18	GA	MO
2-FCV-72-44	CNTMT SUMP TO CS PUMP 2A-A SUCTION	2-47W812-1 / G-3	B	Active	2	12	GA	MO
2-FCV-72-45	CNTMT SUMP TO CS PUMP 2B-B SUCTION	2-47W812-1 / H-3	B	Active	2	12	GA	MO

Required Test Frequency: Full stroke exercise with stroke time closed (STC) on a Quarterly (Q) frequency.
Full stroke exercise with stroke time open (STO) on a Quarterly (Q) frequency.

Deferred Test Frequency: Full stroke exercise with stroke time closed (STC) on a Refueling Outage (RO) frequency.
Full stroke exercise with stroke time open (STO) on a Refueling Outage (RO) frequency.

Justification for Deferred Test Frequency: Opening the containment sump isolation valves during operation requires either draining an extensive portion of the RHR and CS systems or allowing it to drain to the containment sump. Draining and refilling these lines requires a considerable amount of time and could extend forced outage duration. Allowing the affected piping to drain to the sump requires extensive cleanup time. Therefore testing during forced outages is NOT practical. [See also DTJ-21]

Appendix E - Deferred Test Justifications

Deferred Test Justification: DTJ-25

Valve ID	Function	Drawing / Coor	Cat	Act/Pass	Class	Size	Type	Act
1-FCV-63-172	RHR TO HOT LEG 1 & 3 INJECTION ISOLATION	1-47W811-1 / F-6	B	Active	2	12	GA	MO
1-FCV-63-93	RHR TO COLD LEG 2 & 3 INJECTION ISOLATION	1-47W811-1 / G-7	B	Active	2	8	GA	MO
1-FCV-63-94	RHR TO COLD LEG 1 & 4 INJECTION ISOLATION	1-47W811-1 / G-7	B	Active	2	8	GA	MO
1-FCV-74-33	RHR HEAT EXCHANGER 1A OUTLET CROSSTIE	1-47W810-1 / E-4	B	Active	2	8	GA	MO
1-FCV-74-35	RHR HEAT EXCHANGER 1B OUTLET CROSSTIE	1-47W810-1 / C-4	B	Active	2	8	GA	MO
2-FCV-63-172	RHR TO HOT LEG 1 & 3 INJECTION ISOLATION	2-47W811-1 / F-6	B	Active	2	12	GA	MO
2-FCV-63-93	RHR TO COLD LEG 2 & 3 INJECTION ISOLATION	2-47W811-1 / G-6	B	Active	2	8	GA	MO
2-FCV-63-94	RHR TO COLD LEG 1 & 4 INJECTION ISOLATION	2-47W811-1 / G-6	B	Active	2	8	GA	MO
2-FCV-74-33	RHR HEAT EXCHANGER 2A OUTLET CROSSTIE	2-47W810-1 / E-4	B	Active	2	8	GA	MO
2-FCV-74-35	RHR HEAT EXCHANGER 2B OUTLET CROSSTIE	2-47W810-1 / C-4	B	Active	2	8	GA	MO

Required Test Frequency: Full stroke exercise with stroke time open (STO) on a Quarterly (Q) frequency.
Full stroke exercise with stroke time closed (STC) on a Quarterly (Q) frequency.

Deferred Test Frequency: Full stroke exercise with stroke time open (STO) on a Cold Shutdown (CSD) frequency.
Full stroke exercise with stroke time closed (STC) on a Cold Shutdown (CSD) frequency.

Justification for Deferred Test Frequency: Closing any one of the four normally open valves causes operation in an unanalyzed condition by isolating two of the four cold legs from the RHR pumps. Opening 1(2)-FCV-63-172-B would require closure of 1(2)-FCV-74-33-A and 1(2)-FCV-74-35-B to avoid having RHR aligned to hot leg injection and cold leg injection simultaneously. Since these valves cannot be closed without affecting both trains of RHR, 1(2)-FCV-63-172-B cannot be opened.

Deferred Test Justification: DTJ-26

Valve ID	Function	Drawing / Coor	Cat	Act/Pass	Class	Size	Type	Act
1-FSV-68-394	REACTOR VESSEL HEAD VENT	1-47W813-1 / F-7	B	Active	2	1	GL	SO
1-FSV-68-395	REACTOR VESSEL HEAD VENT	1-47W813-1 / G-7	B	Active	2	1	GL	SO
2-FSV-68-394	REACTOR VESSEL HEAD VENT	2-47W813-1 / F-7	B	Active	2	1	GL	SO
2-FSV-68-395	REACTOR VESSEL HEAD VENT	2-47W813-1 / F-7	B	Active	2	1	GL	SO

Required Test Frequency: Full stroke exercise with stroke time open (STO) on a Quarterly (Q) frequency.
Full stroke exercise with stroke time closed (STC) on a Quarterly (Q) frequency.
Fail Safe Close (FSC) on a Quarterly (Q) frequency.

Deferred Test Frequency: Full stroke exercise with stroke time open (STO) on a Cold Shutdown (CSD) frequency.
Full stroke exercise with stroke time closed (STC) on a Cold Shutdown (CSD) frequency.
Fail Safe Close (FSC) on a Cold Shutdown (CSD) frequency.

Justification for Deferred Test Frequency: These valves are solenoid to open and spring to close. With any single valve open for stroke time testing, the remaining valves are required to seat against full RCS pressure upstream with the downstream pressure at Pressurizer Relief Tank pressure. If the valves that remain closed are NOT well seated, stroking of a single valve to the open position while at power could result in leakage from the RCS in excess of the TS limits or depressurization of the RCS. Failure of any single valve to reclose would leave a single valve to prevent leakage from the RCS.

Appendix E - Deferred Test Justifications

Deferred Test Justification: DTJ-27

Valve ID	Function	Drawing / Coor	Cat	Act/Pass	Class	Size	Type	Act
1-FCV-67-103	LOWER CNTMT CLR HDR B ERCW RET ISOL	1-47W845-3 / E-7	A	Active	2	6	BF	MO
1-FCV-67-104	LOWER CNTMT CLR HDR B ERCW RET ISOL	1-47W845-3 / E-8	A	Active	2	6	BF	MO
1-FCV-67-105	LOWER CNTMT CLR HDR B ERCW SUP ISOL	1-47W845-3 / F-7	A	Active	2	6	BF	MO
1-FCV-67-107	LOWER CNTMT CLR HDR D ERCW SUP ISOL	1-47W845-3 / E-8	A	Active	2	6	BF	MO
1-FCV-67-111	LOWER CNTMT CLR HDR D ERCW RET ISOL	1-47W845-3 / D-7	A	Active	2	6	BF	MO
1-FCV-67-112	LOWER CNTMT CLR HDR D ERCW RET ISOL	1-47W845-3 / D-8	A	Active	2	6	BF	MO
1-FCV-67-113	LOWER CNTMT CLR HDR D ERCW SUP ISOL	1-47W845-3 / E-7	A	Active	2	6	BF	MO
1-FCV-67-83	LOWER CNTMT CLR HDR A ERCW SUP ISOL	1-47W845-3 / H-8	A	Active	2	6	BF	MO
1-FCV-67-87	LOWER CNTMT CLR HDR A ERCW RET ISOL	1-47W845-3 / H-7	A	Active	2	6	BF	MO
1-FCV-67-88	LOWER CNTMT CLR HDR A ERCW RET ISOL	1-47W845-3 / H-8	A	Active	2	6	BF	MO
1-FCV-67-89	LOWER CNTMT CLR HDR A ERCW SUP ISOL	1-47W845-3 / H-7	A	Active	2	6	BF	MO
1-FCV-67-91	LOWER CNTMT CLR HDR C ERCW SUP ISOL	1-47W845-3 / G-8	A	Active	2	6	BF	MO
1-FCV-67-95	LOWER CNTMT CLR HDR C ERCW RET ISOL	1-47W845-3 / F-7	A	Active	2	6	BF	MO
1-FCV-67-96	LOWER CNTMT CLR HDR C ERCW RET ISOL	1-47W845-3 / F-8	A	Active	2	6	BF	MO
1-FCV-67-97	LOWER CNTMT CLR HDR C ERCW SUP ISOL	1-47W845-3 / G-7	A	Active	2	6	BF	MO
1-FCV-67-99	LOWER CNTMT CLR HDR B ERCW SUP ISOL	1-47W845-3 / F-8	A	Active	2	6	BF	MO
2-FCV-67-103	LOWER CNTMT CLR HDR B ERCW RET ISOL	2-47W845-3 / E-7	A	Active	2	6	BF	MO
2-FCV-67-104	LOWER CNTMT CLR HDR B ERCW RET ISOL	2-47W845-3 / E-8	A	Active	2	6	BF	MO
2-FCV-67-105	LOWER CNTMT CLR HDR B ERCW SUP ISOL	2-47W845-3 / F-7	A	Active	2	6	BF	MO
2-FCV-67-107	LOWER CNTMT CLR HDR D ERCW SUP ISOL	2-47W845-3 / E-8	A	Active	2	6	BF	MO
2-FCV-67-111	LOWER CNTMT CLR HDR D ERCW RET ISOL	2-47W845-3 / D-7	A	Active	2	6	BF	MO
2-FCV-67-112	LOWER CNTMT CLR HDR D ERCW RET ISOL	2-47W845-3 / D-8	A	Active	2	6	BF	MO
2-FCV-67-113	LOWER CNTMT CLR HDR D ERCW SUP ISOL	2-47W845-3 / E-7	A	Active	2	6	BF	MO
2-FCV-67-83	LOWER CNTMT CLR HDR A ERCW SUP ISOL	2-47W845-3 / H-8	A	Active	2	6	BF	MO
2-FCV-67-87	LOWER CNTMT CLR HDR A ERCW RET ISOL	2-47W845-3 / H-7	A	Active	2	6	BF	MO

Deferred Test Justification: DTJ-27

Valve ID	Function	Drawing / Coor	Cat	Act/Pass	Class	Size	Type	Act
2-FCV-67-88	LOWER CNTMT CLR HDR A ERCW RET ISOL	2-47W845-3 / H-8	A	Active	2	6	BF	MO
2-FCV-67-89	LOWER CNTMT CLR HDR A ERCW SUP ISOL	2-47W845-3 / H-7	A	Active	2	6	BF	MO
2-FCV-67-91	LOWER CNTMT CLR HDR C ERCW SUP ISOL	2-47W845-3 / G-8	A	Active	2	6	BF	MO
2-FCV-67-95	LOWER CNTMT CLR HDR C ERCW RET ISOL	2-47W845-3 / F-7	A	Active	2	6	BF	MO
2-FCV-67-96	LOWER CNTMT CLR HDR C ERCW RET ISOL	2-47W845-3 / F-8	A	Active	2	6	BF	MO
2-FCV-67-97	LOWER CNTMT CLR HDR C ERCW SUP ISOL	2-47W845-3 / G-7	A	Active	2	6	BF	MO
2-FCV-67-99	LOWER CNTMT CLR HDR B ERCW SUP ISOL	2-47W845-3 / F-8	A	Active	2	6	BF	MO

Required Test Frequency: Full stroke exercise with stroke time closed (STC) on a Quarterly (Q) frequency.

Deferred Test Frequency: Full stroke exercise with stroke time closed (STC) on a Cold Shutdown (CSD) frequency.

Justification for Deferred Test Frequency: Exercising the ERCW valves during operation would cause a loss of flow to an entire loop of lower compartment coolers (LCCs), CRDM coolers, and RCP motor coolers. By design 3 of 4 LCCs, 2 of 4 CRDM coolers, and all 8 RCP motor coolers are normally in service. However, during summer conditions, it is normal to run all 4 LCCs, all 4 CRDM coolers, and all 8 RCP motor coolers to maintain temperatures within limits. These FCVs fail as-is, so failure of any of the four FCVs in any position except full open during testing would partially or totally isolate an entire loop of cooling until repairs could be performed. Tech Spec LCO 3.6.5 limits require average lower containment air temperature to be below 120 F, but procedures require actions at 117.5 F. During the summer, some of the lower compartment area temperatures are above this limit, and the containment average has been within 4 to 6 degrees of the limit for extended periods. The TS 3.6.5 LCO action of 8 hours would not allow sufficient time to repair any FCV failure, resulting in a required plant shutdown. The RCP motor coolers actually cool containment by drawing containment air across the RCP motors, so impact of an ERCW isolation on lower compartment temperatures would be slightly delayed. Since the RCP motor cooler discharge temperature is designed to be no more than 123 F and stator winding temperature is normally around 215 F, loss of ERCW would result in a rapid increase in lower containment temperature from the RCP motors and other equipment in the affected loop. Changing LCC alignment has been known to result in temperature excursions in the pressurizer enclosure and causing pressurizer safety valve leakage. Other procedural precautions exist regarding the effect of certain three-cooler combinations on EQ spaces in containment (especially the pressurizer enclosure, where normal maximum temperatures have been exceeded in the past). Other possible impacts are changes in RPI indications as a result of changing CRDM cooler alignments.

Appendix E - Deferred Test Justifications

Deferred Test Justification: DTJ-28

Valve ID	Function	Drawing / Coor	Cat	Act/Pass	Class	Size	Type	Act
1-CKV-63-868	1-CKV-63-868 CONTAINMENT N2 HEADER CHECK	0-47W830-6 / B-7	A/C	Active	2	1	CK	SA
1-CKV-68-849	PRESSURIZER RELIEF TANK N2 SUP HDR CHECK	0-47W830-6 / G-7	A/C	Active	2	1	CK	SA
2-CKV-63-868	2-CKV-63-868 CONTAINMENT N2 HEADER CHECK	0-47W830-6A / B-7	A/C	Active	2	1	CK	SA
2-CKV-68-849	PRESSURIZER RELIEF TANK N2 SUP HDR CHECK	0-47W830-6A / G-8	A/C	Active	2	1	CK	SA

Required Test Frequency: Check Valve Closure (CVC) on a Quarterly (Q) frequency.
Check Valve Bi-directional Open (BDO) on a Quarterly (Q) frequency.

Deferred Test Frequency: Check Valve Closure (CVC) on a Cold Shutdown (CSD) frequency.
Check Valve Bi-directional Open (BDO) on a Cold Shutdown (CSD) frequency.

Justification for Deferred Test Frequency: Cycling these valves closed during power operation interrupts the nitrogen supply inside containment to a number of components and systems. Additionally personnel radiation exposure and valve inaccessibility prohibit quarterly exercising of these valves. ISTC-3522(a) permits scheduling both the open and the close tests at the same frequency.

Deferred Test Justification: DTJ-29

Valve ID	Function	Drawing / Coor	Cat	Act/Pass	Class	Size	Type	Act
1-RFV-70-539	UNIT 1 CCS SURGE TANK RELIEF	0-47W859-1 / E-3	C	Active	3	3	RV	SA
2-RFV-70-539	UNIT 2 CCS SURGE TANK RELIEF	0-47W859-1 / E-1	C	Active	3	3	RV	SA

Required Test Frequency: Vacuum Relief Valve test (set pressure, seat leakage) on a biennial (2Y) frequency.

Deferred Test Frequency: Vacuum Relief Valve test (set pressure, seat leakage) on a staggered 36 month frequency.

Justification for Deferred Test Frequency: As permitted by Mandatory Appendix I, Subparagraph I-1380, Class 2 and 3 vacuum relief devises shall be tested every 2 years, unless performance data suggests the need for a more appropriate test interval. During the First Unit 1 Inservice Test Interval, 1-RFV-70-539 was tested by the IST Program on a once per 120 month test interval. 2-RFV-70-539 was tested by the Augmented IST Program since it was not required for U1 operation. Actual test data ranged from a minimum of six months between test performances to a maximum of 109 months between test performances with no as-found setpoint failures. The only failure encountered was failure of a valve to reseat upon reinstallation following testing. No as-found seat leakage failures or as-found set pressure failures were encountered. This trend has continued in the Second Unit 1 IST Interval. For dual unit operation, these valves will be in separate Valve Groups (one valve each per Unit) and tested on a 72 month staggered interval so that one valve (Unit) is tested every 36 months.

Appendix E - Deferred Test Justifications

Deferred Test Justification: DTJ-30

Valve ID	Function	Drawing / Coor	Cat	Act/Pass	Class	Size	Type	Act
1-CKV-74-544	RHR HEADER 1A MINIMUM FLOW CHECK	1-47W810-1 / F-5	C	Active	2	8	CK	SA
1-CKV-74-545	RHR HEADER 1B MINIMUM FLOW CHECK	1-47W810-1 / C-5	C	Active	2	8	CK	SA
2-CKV-74-544	RHR HEADER 2A MINIMUM FLOW CHECK	2-47W810-1 / F-5	C	Active	2	8	CK	SA
2-CKV-74-545	RHR HEADER 2B MINIMUM FLOW CHECK	2-47W810-1 / C-5	C	Active	2	8	CK	SA

Required Test Frequency: Check Valve Closure (CVC) on a Quarterly (Q) frequency.
Check Valve Open (CVO) on a Quarterly (Q) frequency.

Deferred Test Frequency: Check Valve Closure (CVC) on a Refueling Outage (RO) frequency.
Check Valve Open (CVO) on a Refueling Outage (RO) frequency.

Justification for Deferred Test Frequency: The RHR pumps do not develop sufficient head to open the valves during power operation. With the RHR pump suction being supplied from the normal loop 4 suction path during shutdown and discharging to a closed vessel, the pumps cannot develop sufficient flow to satisfy the full flow requirements for the check valves. In order to achieve full flow, the vessel must be open and the pump suction taken from the RWST or from loop 4. These valves can only be closure tested during operation. While in shut down conditions, the valve alignments necessary to closure test these valves adversely affects both trains of a safety system. Full open test of the check valves is performed during refueling outages. The first quarterly pump test after each refueling outage is the only closure test that can be credited. All other quarterly tests only part stroke open the valves.

Appendix E - Deferred Test Justifications

Deferred Test Justification: DTJ-31

Valve ID	Function	Drawing / Coor	Cat	Act/Pass	Class	Size	Type	Act
1-CKV-70-679	RCP THERMAL BARRIER CCS SUP HDR CHECK	1-47W859-2 / H-3	A/C	Active	2	3	CK	SA
1-FCV-70-100	RCP OIL COOLERS CCS SUPPLY	1-47W859-2 / G-3	A	Active	2	6	BF	MO
1-FCV-70-133	THERMAL BARRIER CCS SUPPLY	1-47W859-2 / H-3	B	Active	3	3	GA	MO
1-FCV-70-134	THERMAL BARRIER CCS SUPPLY	1-47W859-2 / H-3	A	Active	2	3	GA	MO
1-FCV-70-140	RCP OIL COOLER CCS SUPPLY	1-47W859-2 / G-3	A	Active	2	6	BF	MO
1-FCV-70-87	THERMAL BARRIER CCS RETURN	1-47W859-2 / H-9	A	Active	2	3	GA	MO
1-FCV-70-89	RCP OIL COOLER CCS RET HDR	1-47W859-2 / E-9	A	Active	2	6	BF	MO
1-FCV-70-90	THERMAL BARRIER CCS RETURN	1-47W859-2 / F-10	A	Active	2	3	GA	MO
1-FCV-70-92	RCP OIL COOLER CCS RETURN	1-47W859-2 / E-10	A	Active	2	6	BF	MO
2-CKV-70-679	RCP THERMAL BARRIER CCS SUP HDR CHECK	2-47W859-3 / H-4	A/C	Active	2	3	CK	SA
2-FCV-70-100	RCP OIL COOLERS CCS SUPPLY	2-47W859-3 / G-4	A	Active	2	6	BF	MO
2-FCV-70-133	THERMAL BARRIER CCS SUPPLY	2-47W859-3 / H-3	B	Active	3	3	GA	MO
2-FCV-70-134	THERMAL BARRIER CCS SUPPLY	2-47W859-3 / H-3	A	Active	2	3	GA	MO
2-FCV-70-140	RCP OIL COOLER CCS SUPPLY	2-47W859-3 / G-3	A	Active	2	6	BF	MO
2-FCV-70-87	THERMAL BARRIER CCS RETURN	2-47W859-3 / H-9	A	Active	2	3	GA	MO
2-FCV-70-89	RCP OIL COOLER CCS RET HDR	2-47W859-3 / E-9	A	Active	2	6	BF	MO
2-FCV-70-90	THERMAL BARRIER CCS RETURN	2-47W859-3 / F-10	A	Active	2	3	GA	MO
2-FCV-70-92	RCP OIL COOLER CCS RETURN	2-47W859-3 / E-10	A	Active	2	6	BF	MO

Required Test Frequency:

Valves 1 & 2-CKV-70-679
Check Valve Bi-directional Open (BDO) on a Quarterly (Q) frequency.
Check Valve Closure (CVC) on a Quarterly (Q) frequency.

Valves 1 & 2-FCV-70-87, 1 & 2-FCV-70-89, 1 & 2-70-90, 1 & 2-FCV-70-92, 1 & 2-FCV-70-100, 1 & 2-FCV-70-133, 1 & 2-FCV-70-134, 1 & 2-FCV-70-140
Full stroke exercise with stroke time closed (STC) on a Quarterly (Q) frequency.

Deferred Test Frequency:

Valves 1 & 2-CKV-70-679
Check Valve Bi-directional Open (BDO) on a Refuel Outage (RO) frequency.
Check Valve Closure (CVC) on a Quarterly (Q) frequency.

Valves 1 & 2-FCV-70-87, 1 & 2-FCV-70-89, 1 & 2-70-90, 1 & 2-FCV-70-92, 1 & 2-FCV-70-100, 1 & 2-FCV-70-133, 1 & 2-FCV-70-134, 1 & 2-FCV-70-140
Full stroke exercise with stroke time closed (STC) on a Refuel Outage (RO) frequency.

Justification for Deferred Test Frequency:

Valves 1 & 2-CKV-70-679
Exercising these valves during operation of the RCPs results in loss of cooling water flow to the reactor coolant pump thermal barriers. The RCP vendor states that CCS supply to the thermal barriers must be flowing at all times when the RCS temperature is above 200 F (i.e., above CSD temperature). The Thermal Barrier pump vendor states that the pumps must never be operated with a blocked suction or discharge, even for a brief period of time. To perform the closure test a 10' ladder is required inside Accumulator Room #4, which is a physically tight space. The test requires opening of both normally locked closed demin water containment manual isolation valves for Penetration X-50B which inops containment. The test also requires connection to a demin water valve inside containment that is normally locked closed during operation to limit exposure of personnel to safety hazards and implement ALARA. NUREG-1482 also states the need to setup test equipment is adequate justification to defer backflow testing of a check valve until a refueling outage.

Valves 1 & 2-FCV-70-87, 1 & 2-FCV-70-89, 1 & 2-FCV-70-90, 1 & 2-FCV-70-92, 1 & 2-FCV-70-100, 1 & 2-FCV-70-133, 1 & 2-FCV-70-134, 1 & 2-FCV-70-140
To test these valves, the Thermal Barrier and Reactor Coolant pumps would have to be shut down. Exercising the CCS thermal barrier supply and return valves during operation of the RCPs results in loss of cooling water flow to the reactor coolant pump thermal barriers. The RCP vendor states that CCS supply to the thermal barriers must be flowing at all times when the RCS temperature is above 200 F (i.e., above CSD temperature). The Thermal Barrier pump vendor states that the pumps must never be operated with a blocked suction or discharge, even for a brief period of time. To test these valves, the Thermal Barrier and Reactor Coolant pumps would have to be shut down. Stopping the RCPs for testing of this CCS valve during normal operation would result in a unit trip. Exercising the CCS upper and lower motor oil coolers supply and return valves during operation of the RCPs results in loss of cooling water flow to the oil coolers. RCP operation is limited to 10 minutes without the motor oil cooling water supply. Stopping the RCPs any other time would increase the wear and stress on the RCPs, increase the number of cycles on other plant equipment, and could extend the length of cold shutdown outages. The NRC has recommended in NUREG-1482 (section 3.1.1.4) that valves in support systems that perform functions that are vital to the continued operability of the RCPs, such as component cooling and the supply and return of seal water, be tested during refueling outages and during shutdowns when the RCPs are shut down for a sufficient period of time to perform the test.

Appendix E - Deferred Test Justifications

Deferred Test Justification: DTJ-32

Valve ID	Function	Drawing / Coor	Cat	Act/Pass	Class	Size	Type	Act
0-CKV-32-380	ESSENT CNTL AIR ISOL CKV TO 1-LCV-3-172/175	0-47W848-10 / G-4	C	Active	3	2	CK	SA
0-CKV-32-386	ESSENT CNTL AIR SUPPLY CKV TO 2-LCV-3-172/175	0-47W848-10 / G-4	C	Active	3	2	CK	SA
0-CKV-32-407	ESSENT CNTL AIR SUPPLY CKV TO 1-LCV-3-173/174	0-47W848-10 / C-3	C	Active	3	2	CK	SA
0-CKV-32-414	ESSENT CNTL AIR SUPPLY CKV TO 2-LCV-3-173/174	0-47W848-10 / B-3	C	Active	3	2	CK	SA

Required Test Frequency: Check Valve Open (CVO) on a Quarterly (Q) frequency.
Check Valve Bidirectional Closure (BDC) on a Quarterly (Q) frequency.

Deferred Test Frequency: Check Valve Open (CVO) on a Refueling Outage (RO) frequency.
Check Valve Bidirectional Closure (BDC) on a Refueling Outage (RO) frequency.

Justification for Deferred Test Frequency: For these valves simultaneous stroke time testing of two AFW LCVs is required to demonstrate full stroke opening. Quarterly stroke time testing of individual LCVs only produces a part stroke of the valve. Open and closure verification using D&I would require removal of a large part of ACAS for an extended period of time. Closure testing using UT or RT would require installation of special test equipment and (in the case of RT) require restricting access to portions of the Auxiliary Building. Isolating the ACAS supply in order to allow the valve to close would result in removal of the TDAFW pump from service for an extended length of time, potentially exceeding the maintenance rule unavailability time for AFW and challenging LCO limits. Backflow testing of these valves would require removal of ACAS from service in order to vent the upstream side of the CKV. ACAS is a safety-related system required to support operability of multiple safety-related systems. Removal of ACAS from service requires entry into multiple LCOs and could result in shutdown of the unit if delays in return to service are encountered. Potentially affected systems include the following: Emergency Gas Treatment, Ventilation, Chilled Water, Main Steam, Radiation Monitoring, Reactor Coolant, Waste Gas, and Auxiliary Feedwater.

Appendix E - Deferred Test Justifications

Deferred Test Justification: DTJ-33

Valve ID	Function	Drawing / Coor	Cat	Act/Pass	Class	Size	Type	Act
0-CKV-32-1509	ESSENT CNTL AIR CKV TO 1-LCV-3-172/175	0-47W848-10 / G-5	A/C	Active	3	0.5	CK	SA
0-CKV-32-1511	ESSENT CNTL AIR CKV TO 1-LCV-3-173/174	0-47W848-10 / C-4	A/C	Active	3	0.5	CK	SA
0-CKV-32-1579	ESSENT CNTL AIR CKV TO 2-LCV-3-172/175	0-47W848-10 / F-5	A/C	Active	3	0.5	CK	SA
0-CKV-32-1581	ESSENT CNTL AIR CKV TO 2-LCV-3-173/174	0-47W848-10 / B-4	A/C	Active	3	0.5	CK	SA
1-CKV-32-9211	DOWNSTREAM CKV VLV FOR AIR LINE TO 1-LCV-3-172 & -175	0-47W848-10 / G-5	A/C	Active	3	0.5	CK	SA
1-CKV-32-9221	DOWNSTREAM CKV VLV FOR AIR LINE TO 1-LCV-3-173 & -174	0-47W848-10 / C-4	A/C	Active	3	0.5	CK	SA
1-CKV-32-9230	UPSTREAM CKV VLV FOR AIR LINE TO 1-LCV-3-148 & -148A	0-47W848-10 / D-3	A/C	Active	3	0.5	CK	SA
1-CKV-32-9231	DOWNSTREAM CKV VLV FOR AIR LINE TO 1-LCV-3-148 & -148A	0-47W848-10 / D-3	A/C	Active	3	0.5	CK	SA
1-CKV-32-9240	UPSTREAM CHECK VLV FOR AIR LINE TO 1-LCV-3-156 & -156A	0-47W848-10 / G-3	A/C	Active	3	0.5	CK	SA
1-CKV-32-9241	DOWNSTREAM CKV VLV FOR AIR LINE TO 1-LCV-3-156 & -156A	0-47W848-10 / G-3	A/C	Active	3	0.5	CK	SA
1-CKV-32-9250	UPSTREAM CKV VLV FOR AIR LINE TO 1-PCV-3-122	0-47W848-10 / G-3	A/C	Active	3	0.5	CK	SA
1-CKV-32-9251	DOWNSTREAM CKV VLV FOR AIR LINE TO 1-PCV-3-122	0-47W848-10 / G-3	A/C	Active	3	0.5	CK	SA
1-CKV-32-9260	UPSTREAM CKV VLV FOR AIR LINE TO LINE TO 1-PCV-3-132	0-47W848-10 / C-2	A/C	Active	3	0.5	CK	SA
1-CKV-32-9261	DOWNSTREAM CKV VLV FOR AIR LINE TO 1-PCV-3-132	0-47W848-10 / C-1	A/C	Active	3	0.5	CK	SA
1-CKV-32-9270	UPSTREAM CKV VLV FOR AIR LINE TO 1-LCV-3-164 & -164A	0-47W848-10 / H-3	A/C	Active	3	0.5	CK	SA
1-CKV-32-9271	DOWNSTREAM CHECK VALVE FOR AIR LINE TO 1-LCV-3-164 & -164A	0-47W848-10 / H-3	A/C	Active	3	0.5	CK	SA
1-CKV-32-9280	UPSTREAM CKV VLV FOR AIR LINE TO 1-LCV-3-171 & 171A	0-47W848-10 / D-3	A/C	Active	3	0.5	CK	SA
1-CKV-32-9281	DOWNSTREAM CKV VLV FOR AIR LINE TO 1-LCV-3-171 & -171A	0-47W848-10 / D-3	A/C	Active	3	0.5	CK	SA
2-CKV-32-9211	DOWNSTREAM CKV VLV FOR AIR LINE TO 2-LCV-3-172 & -175	0-47W848-10 / F-11	A/C	Active	3	0.5	CK	SA
2-CKV-32-9221	DOWNSTREAM CKV VLV FOR AIR LINE TO 2-LCV-3-173 & -174	0-47W848-10 / F-11	A/C	Active	3	0.5	CK	SA
2-CKV-32-9230	UPSTREAM CKV VLV FOR AIR LINE TO 2-LCV-3-148 & -148A	0-47W848-10 / F-11	A/C	Active	3	0.5	CK	SA
2-CKV-32-9231	DOWNSTREAM CKV VLV FOR AIR LINE TO 2-LCV-3-148 & -148A	0-47W848-10 / F-11	A/C	Active	3	0.5	CK	SA
2-CKV-32-9240	UPSTREAM CHECK VLV FOR AIR LINE TO 2-LCV-3-156 & -156A	0-47W848-10 / F-11	A/C	Active	3	0.5	CK	SA
2-CKV-32-9241	DOWNSTREAM CKV VLV FOR AIR LINE TO 2-LCV-3-156 & -156A	0-47W848-10 / F-11	A/C	Active	3	0.5	CK	SA
2-CKV-32-9250	UPSTREAM CKV VLV FOR AIR LINE TO 2-PCV-3-122	0-47W848-10 / F-11	A/C	Active	3	0.5	CK	SA

Appendix E - Deferred Test Justifications

Deferred Test Justification: DTJ-33

Valve ID	Function	Drawing / Coor	Cat	Act/Pass	Class	Size	Type	Act
2-CKV-32-9251	DOWNSTREAM CKV VLV FOR AIR LINE TO 2-PCV-3-122	0-47W848-10 / F-11	A/C	Active	3	0.5	CK	SA
2-CKV-32-9260	UPSTREAM CKV VLV FOR AIR LINE TO LINE TO 2-PCV-3-132	0-47W848-10 / F-11	A/C	Active	3	0.5	CK	SA
2-CKV-32-9261	DOWNSTREAM CKV VLV FOR AIR LINE TO 2-PCV-3-132	0-47W848-10 / F-11	A/C	Active	3	0.5	CK	SA

Required Test Frequency: Check Valve Open (CVO) on a Quarterly (Q) frequency.
Check Valve Closure (CVC) on a Quarterly (Q) frequency.

Deferred Test Frequency: Check Valve Open (CVO) on a Refueling Outage (RO) frequency.
Check Valve Closure (CVC) on a Refueling Outage (RO) frequency.

Justification for Deferred Test Frequency: For these valves simultaneous stroke time testing of two AFW LCVs or one PCV is required to demonstrate full stroke opening. This can be performed, however the OM Code only requires testing at a frequency when both the open and closed testing can be performed. Backflow testing of these valves would require removal of ACAS and the N2 backup supply for each MDAFW and TDAFW pump from service for an extended period of time each quarter. This could result in exceeding maintenance rule unavailability time for AFW and challenge LCO time limits. ACAS is a safety-related system required to support operability of multiple safety-related systems. Removal of ACAS from service requires entry into multiple LCOs and could result in shutdown of the unit if delays in return to service are encountered. Potentially affected systems include the following: Emergency Gas Treatment, Ventilation, Chilled Water, Main Steam, Radiation Monitoring, Reactor Coolant, Waste Gas, and Auxiliary Feedwater.

Appendix E - Deferred Test Justifications

Deferred Test Justification: DTJ-34

Valve ID	Function	Drawing / Coor	Cat	Act/Pass	Class	Size	Type	Act
1-CKV-32-9212	UPSTREAM CKV VLV FOR N2 LINE TO 1-LCV-3-172 & -175	1-47W830-12 / F-4	A/C	Active	3	0.5	CK	SA
1-CKV-32-9213	DOWNSTREAM CKV VLV FOR N2 LINE TO 1-LCV-3-172 & -175	1-47W830-12 / F-5	A/C	Active	3	0.5	CK	SA
1-CKV-32-9222	UPSTREAM CKV VLV FOR N2 LINE TO 1-LCV-3-173 & -174	1-47W830-12 / E-4	A/C	Active	3	0.5	CK	SA
1-CKV-32-9223	DOWNSTREAM CKV VLV FOR N2 LINE TO 1-LCV-3-173 & -174	1-47W830-12 / E-5	A/C	Active	3	0.5	CK	SA
1-CKV-32-9232	UPSTREAM CKV VLV FOR N2 TO 1-LCV-3-148 & -148A	1-47W830-12 / B-9	A/C	Active	3	0.5	CK	SA
1-CKV-32-9233	DOWNSTREAM CKV VLV FOR N2 TO 1-LCV-3-148 & -148A	1-47W830-12 / B-9	A/C	Active	3	0.5	CK	SA
1-CKV-32-9242	UPSTREAM CKV VLV FOR N2 LINE TO 1-LCV-3-156 & -156A	1-47W830-12 / C-9	A/C	Active	3	0.5	CK	SA
1-CKV-32-9243	DOWNSTREAM CKV VLV FOR N2 LINE TO 1-LCV-3-156 & -156A	1-47W830-12 / C-9	A/C	Active	3	0.5	CK	SA
1-CKV-32-9252	UPSTREAM CKV VLV FOR N2 LINE TO 1-PCV-3-122	1-47W830-12 / B-4	A/C	Active	3	0.5	CK	SA
1-CKV-32-9253	DOWNSTREAM CKV VLV FOR N2 LINE TO 1-PCV-3-122	1-47W830-12 / B-5	A/C	Active	3	0.5	CK	SA
1-CKV-32-9262	UPSTREAM CKV VLV FOR N2 LINE TO 1-PCV-3-132	1-47W830-12 / B-4	A/C	Active	3	0.5	CK	SA
1-CKV-32-9263	DOWNSTREAM CKV VLV FOR N2 LINE TO 1-PCV-3-132	1-47W830-12 / B-5	A/C	Active	3	0.5	CK	SA
1-CKV-32-9272	UPSTREAM CKV VLV FOR N2 LINE TO 1-LCV-3-171 & -171A	1-47W830-12 / B-6	A/C	Active	3	0.5	CK	SA
1-CKV-32-9273	DOWNSTREAM CKV VLV FOR N2 LINE TO 1-LCV-3-171 & -171A	1-47W830-12 / B-7	A/C	Active	3	0.5	CK	SA
1-CKV-32-9282	UPSTREAM CKV VLV FOR N2 LINE TO 1-LCV-3-164 & -164A	1-47W830-12 / D-6	A/C	Active	3	0.5	CK	SA
1-CKV-32-9283	DOWNSTREAM CKV VLV FOR N2 LINE TO 1-LCV-3-164 & 164A	1-47W830-12 / D-7	A/C	Active	3	0.5	CK	SA
2-CKV-32-9212	UPSTREAM CKV VLV FOR N2 LINE TO 2-LCV-3-172 & -175	0-47W848-10 / F-11	A/C	Active	3	0.5	CK	SA
2-CKV-32-9213	DOWNSTREAM CKV VLV FOR N2 LINE TO 2-LCV-3-172 & -175	0-47W848-10 / F-11	A/C	Active	3	0.5	CK	SA
2-CKV-32-9222	UPSTREAM CKV VLV FOR N2 LINE TO 2-LCV-3-173 & -174	0-47W848-10 / F-11	A/C	Active	3	0.5	CK	SA
2-CKV-32-9223	DOWNSTREAM CKV VLV FOR N2 LINE TO 2-LCV-3-173 & -174	0-47W848-10 / F-11	A/C	Active	3	0.5	CK	SA
2-CKV-32-9232	UPSTREAM CKV VLV FOR N2 TO 2-LCV-3-148 & -148A	0-47W848-10 / F-11	A/C	Active	3	0.5	CK	SA
2-CKV-32-9233	DOWNSTREAM CKV VLV FOR N2 TO 2-LCV-3-148 & -148A	0-47W848-10 / F-11	A/C	Active	3	0.5	CK	SA
2-CKV-32-9242	UPSTREAM CKV VLV FOR N2 LINE TO 2-LCV-3-156 & -156A	0-47W848-10 / F-11	A/C	Active	3	0.5	CK	SA
2-CKV-32-9243	DOWNSTREAM CKV VLV FOR N2 LINE TO 2-LCV-3-156 & -156A	0-47W848-10 / F-11	A/C	Active	3	0.5	CK	SA
2-CKV-32-9252	UPSTREAM CKV VLV FOR N2 LINE TO 2-PCV-3-122	0-47W848-10 / F-11	A/C	Active	3	0.5	CK	SA

Appendix E - Deferred Test Justifications

Deferred Test Justification: DTJ-34

Valve ID	Function	Drawing / Coor	Cat	Act/Pass	Class	Size	Type	Act
2-CKV-32-9253	DOWNSTREAM CKV VLV FOR N2 LINE TO 2-PCV-3-122	0-47W848-10 / F-11	A/C	Active	3	0.5	CK	SA
2-CKV-32-9262	UPSTREAM CKV VLV FOR N2 LINE TO 2-PCV-3-132	0-47W848-10 / F-11	A/C	Active	3	0.5	CK	SA
2-CKV-32-9263	DOWNSTREAM CKV VLV FOR N2 LINE TO 2-PCV-3-132	0-47W848-10 / F-11	A/C	Active	3	0.5	CK	SA

Required Test Frequency: Check Valve Bidirectional Open (BDO) on a Quarterly (Q) frequency.
Check Valve Closure (CVC) on a Quarterly (Q) frequency.

Deferred Test Frequency: Check Valve Bidirectional Open (BDO) on a Refueling Outage (RO) frequency.
Check Valve Closure (CVC) on a Refueling Outage (RO) frequency.

Justification for Deferred Test Frequency: For these valves simultaneous stroke testing of two AFW LCVs or one PCV is required to demonstrate bidirectional opening. Bidirectional opening only demonstrates freedom of motion to at least the partially open position, and is not necessarily a full open test. This can be performed, however the OM Code only requires testing at a frequency when both the open and closed testing can be performed. Backflow testing of these valves would require removal of ACAS and the N2 backup supply for each MDAFW and TDAFW pump from service for an extended period of time each quarter. This could result in exceeding maintenance rule unavailability time for AFW and challenge LCO time limits. ACAS is a safety-related system required to support operability of multiple safety-related systems. Removal of ACAS from service requires entry into multiple LCOs and could result in shutdown of the unit if delays in return to service are encountered. Potentially affected systems include the following: Emergency Gas Treatment, Ventilation, Chilled Water, Main Steam, Radiation Monitoring, Reactor Coolant, Waste Gas, and Auxiliary Feedwater. The U1 CKVs do not have a test connection between them and are tested as a series pair in accordance with ISTC-5223.

Appendix F - Snubber Test Plan

Page 1 of 66

Component ID	Support ID	Mark No	ISO Dwg	Support Dwg	Class	Sys	Type	Mfg	Model	DTPG	Plan
1-SNUB-1-1A303N	1-01A-303	1-01A-303	47W400-213/11		2	001		PSA	PSA-35	1	37
1-SNUB-1-1A303S	1-01A-303	1-01A-303	47W400-213/11		2	001		PSA	PSA-35	1	37
1-SNUB-1-1A307	1-01A-307	1-01A-307	47W400-213/23A		2	001		PSA	PSA-35	1	37
1-SNUB-1-1A312	1-01A-312	1-01A-312	47W400-213/43Z		2	001		PSA	PSA-100	1	37
1-SNUB-1-1A313	1-01A-313	1-01A-313	47W400-213/46		2	001		PSA	PSA-35	1	37
1-SNUB-1-1A317	1-01A-317	1-01A-317	47W400-213/65A		2	001		PSA	PSA-3	1	37
1-SNUB-1-1A340	1-01A-340	1-01A-340	47W400-214/1C9		2	001		PSA	PSA-100	1	37
1-SNUB-1-1A343N	1-01A-343	1-01A-343	47W400-214/1C3		2	001		PSA	PSA-35	1	37
1-SNUB-1-1A343S	1-01A-343	1-01A-343	47W400-214/1C3		2	001		PSA	PSA-35	1	37
1-SNUB-1-1A348	1-01A-348	1-01A-348	47W400-214/24		2	001		PSA	PSA-35	1	37
1-SNUB-1-1A349	1-01A-349	1-01A-349	47W400-214/41		2	001		PSA	PSA-100	1	37
1-SNUB-1-1A350	1-01A-350	1-01A-350	47W400-214/44		2	001		PSA	PSA-35	1	37
1-SNUB-1-1A355	1-01A-355	1-01A-355	47W400-214/65		2	001		PSA	PSA-3	1	37
1-SNUB-1-1A380	1-01A-380	1-01A-380	47W400-215/1C9		2	001		PSA	PSA-100	1	37
1-SNUB-1-1A383N	1-01A-383	1-01A-383	47W400-215/17A		2	001		PSA	PSA-35	1	37
1-SNUB-1-1A383S	1-01A-383	1-01A-383	47W400-215/17A		2	001		PSA	PSA-35	1	37
1-SNUB-1-1A389	1-01A-389	1-01A-389	47W400-215/25		2	001		PSA	PSA-35	1	37
1-SNUB-1-1A391	1-01A-391	1-01A-391	47W400-215/33A		2	001		PSA	PSA-100	1	37
1-SNUB-1-1A392	1-01A-392	1-01A-392	47W400-215/35		2	001		PSA	PSA-35	1	37
1-SNUB-1-1A397	1-01A-397	1-01A-397	47W400-215/89		2	001		PSA	PSA-3	1	37
1-SNUB-1-1A423N	1-01A-423	1-01A-423	47W400-216/10		2	001		PSA	PSA-35	1	37
1-SNUB-1-1A423S	1-01A-423	1-01A-423	47W400-216/1C3		2	001		PSA	PSA-35	1	37
1-SNUB-1-1A424	1-01A-424	1-01A-424	47W400-216/12		2	001		PSA	PSA-100	1	37

Appendix F - Snubber Test Plan

Page 2 of 66

Component ID	Support ID	Mark No	ISO Dwg	Support Dwg	Class	Sys	Type	Mfg	Model	DTPG	Plan
1-SNUB-1-1A428	1-01A-428	1-01A-428	47W400-216/20A		2	001		PSA	PSA-100	1	37
1-SNUB-1-1A429	1-01A-429	1-01A-429	47W400-216/24		2	001		PSA	PSA-35	1	37
1-SNUB-1-1A434	1-01A-434	1-01A-434	47W400-216/29B		2	001		PSA	PSA-100	1	37
1-SNUB-1-1A435	1-01A-435	1-01A-435	47W400-216/31		2	001		PSA	PSA-35	1	37
1-SNUB-1-1A439	1-01A-439	1-01A-439	47W400-216/84B		2	001		PSA	PSA-3	1	37
1-SNUB-1-1SG1A	1-SG-1-A	1-SG-1-A	N/A		2	001		PMH	PMH-12	2	10%
1-SNUB-1-1SG1B	1-SG-1-B	1-SG-1-B	N/A		2	001		PMH	PMH-12	2	10%
1-SNUB-1-1SG1C	1-SG-1-C	1-SG-1-C	N/A		2	001		PMH	PMH-12	2	10%
1-SNUB-1-1SG1D	1-SG-1-D	1-SG-1-D	N/A		2	001		PMH	PMH-12	2	10%
1-SNUB-1-1SG1E	1-SG-1-E	1-SG-1-E	N/A		2	001		PMH	PMH-12	2	10%
1-SNUB-1-1SG2A	1-SG-2-A	1-SG-2-A	N/A		2	001		PMH	PMH-12	2	10%
1-SNUB-1-1SG2B	1-SG-2-B	1-SG-2-B	N/A		2	001		PMH	PMH-12	2	10%
1-SNUB-1-1SG2C	1-SG-2-C	1-SG-2-C	N/A		2	001		PMH	PMH-12	2	10%
1-SNUB-1-1SG2D	1-SG-2-D	1-SG-2-D	N/A		2	001		PMH	PMH-12	2	10%
1-SNUB-1-1SG2E	1-SG-2-E	1-SG-2-E	N/A		2	001		PMH	PMH-12	2	10%
1-SNUB-1-1SG3A	1-SG-3-A	1-SG-3-A	N/A		2	001		PMH	PMH-12	2	10%
1-SNUB-1-1SG3B	1-SG-3-B	1-SG-3-B	N/A		2	001		PMH	PMH-12	2	10%
1-SNUB-1-1SG3C	1-SG-3-C	1-SG-3-C	N/A		2	001		PMH	PMH-12	2	10%
1-SNUB-1-1SG3D	1-SG-3-D	1-SG-3-D	N/A		2	001		PMH	PMH-12	2	10%
1-SNUB-1-1SG3E	1-SG-3-E	1-SG-3-E	N/A		2	001		PMH	PMH-12	2	10%
1-SNUB-1-1SG4A	1-SG-4-A	1-SG-4-A	N/A		2	001		PMH	PMH-12	2	10%
1-SNUB-1-1SG4B	1-SG-4-B	1-SG-4-B	N/A		2	001		PMH	PMH-12	2	10%
1-SNUB-1-1SG4C	1-SG-4-C	1-SG-4-C	N/A		2	001		PMH	PMH-12	2	10%

Appendix F - Snubber Test Plan

Page 3 of 66

Component ID	Support ID	Mark No	ISO Dwg	Support Dwg	Class	Sys	Type	Mfg	Model	DTPG	Plan
1-SNUB-1-1SG4D	1-SG-4-D	1-SG-4-D	N/A		2	001		PMH	PMH-12	2	10%
1-SNUB-1-1SG4E	1-SG-4-E	1-SG-4-E	N/A		2	001		PMH	PMH-12	2	10%
1-SNUB-3-3A200	1-03A-200	1-03A-200	47W401-208/8		2	003A		PSA	PSA-10	1	37
1-SNUB-3-3A201	1-03A-201	1-03A-201	47W401-208/12		2	003A		PSA	PSA-35	1	37
1-SNUB-3-3A205	1-03A-205	1-03A-205	47W401-208/16AX		2	003A		PSA	PSA-100	1	37
1-SNUB-3-3A240	1-03A-240	1-03A-240	47W401-209/8C		2	003A		PSA	PSA-10	1	37
1-SNUB-3-3A241	1-03A-241	1-03A-241	47W401-209 / 11A		2	003A		PSA	PSA-35	1	37
1-SNUB-3-3A244	1-03A-244	1-03A-244	47W401-209/14		2	003A		PSA	PSA-100	1	37
1-SNUB-3-3A248	1-03A-248	1-03A-248	47W401-209/20A		2	003A		PSA	PSA-35	1	37
1-SNUB-3-3A280	1-03A-280	1-03A-280	47W401-209/3F		2	003A		PSA	PSA-35	1	37
1-SNUB-3-3A281	1-03A-281	1-03A-281	47W401-210/6A		2	003A		PSA	PSA-10	1	37
1-SNUB-3-3A285	1-03A-285	1-03A-285	47W401-210/10A		2	003A		PSA	PSA-100	1	37
1-SNUB-3-3A320	1-03A-320	1-03A-320	47W401-211/3E		2	003A		PSA	PSA-35	1	37
1-SNUB-3-3A321	1-03A-321	1-03A-321	47W401-211/6A		2	003A		PSA	PSA-35	1	37
1-SNUB-3-3A323	1-03A-323	1-03A-323	47W401-211/7X		2	003A		PSA	PSA-100	1	37
1-SNUB-3-3A328	1-03A-328	1-03A-328	47W401-211/13A		2	003A		PSA	PSA-100	1	37
1-SNUB-3-3A369	1-03A-369	1-03A-369	47W401-212A/17		2	003A		PSA	PSA-10	1	37
1-SNUB-3-3A370	1-03A-370	1-03A-370	47W401-212A/19		2	003A		PSA	PSA-3	1	37
1-SNUB-3-3A373	1-03A-373	1-03A-373	47W401-212A/36		2	003A		PSA	PSA-10	1	37
1-SNUB-3-3A374	1-03A-374	1-03A-374	47W401-212A/42		2	003A		PSA	PSA-1	1	37
1-SNUB-3-3A402	1-03A-402	1-03A-402	47W427-219A/C18Z		2	003A		PSA	PSA-3	1	37
1-SNUB-3-3A405	1-03A-405	1-03A-405	47W401-219A/C19L		2	003A		PSA	PSA-3	1	37
1-SNUB-3-3A409	1-03A-409	1-03A-409	47W401-219A/A18Y		2	003A		PSA	PSA-10	1	37

Appendix F - Snubber Test Plan

Page 4 of 66

Component ID	Support ID	Mark No	ISO Dwg	Support Dwg	Class	Sys	Type	Mfg	Model	DTPG	Plan
1-SNUB-3-3A411	1-03A-411	1-03A-411	47W401-219A/16		2	003A		PSA	PSA-10	1	37
1-SNUB-3-3A426	1-03A-426	1-03A-426	47W401-219/56A		2	003A		PSA	PSA-3	1	37
1-SNUB-3-3A449	1-03A-449	1-03A-449	47W427-218A/C20A		2	003A		PSA	PSA-10	1	37
1-SNUB-3-3A450	1-03A-450	1-03A-450	47W427-218A/C20A		2	003A		PSA	PSA-10	1	37
1-SNUB-3-3A453L	1-03A-453L	1-03A-453	47W427-218A/A01		2	003A		PSA	PSA-3	1	37
1-SNUB-3-3A453U	1-03A-453U	1-03A-453	47W427-218A/A01		2	003A		PSA	PSA-3	1	37
1-SNUB-3-3A455	1-03A-455	1-03A-455	47W427-218A/104		2	003A		PSA	PSA-10	1	37
1-SNUB-3-3A466	1-03A-466	1-03A-466	47W401-216/X43		2	003A		PSA	PSA-3	1	37
1-SNUB-3-3A468	1-03A-468	1-03A-468	47W401-216/X48		2	003A		PSA	PSA-3	1	37
1-SNUB-3-3A480	1-03A-480	1-03A-480	47W401-215/22		2	003A		PSA	PSA-3	1	37
1-SNUB-3-3A482L	1-03A-482	1-03A-482	47W401-215/24		2	003A		PSA	PSA-3	1	37
1-SNUB-3-3A482U	1-03A-482	1-03A-482	47W401-215/24		2	003A		PSA	PSA-3	1	37
1-SNUB-3-3A483	1-03A-483	1-03A-483	47W401-215/28		2	003A		PSA	PSA-10	1	37
1-SNUB-3-3A485	1-03A-485	1-03A-485	47W401-215/34B		2	003A		PSA	PSA-10	1	37
1-SNUB-3-3A487E	1-03A-487	1-03A-487	47W401-215/40		2	003A		PSA	PSA-3	1	37
1-SNUB-3-3A487W	1-03A-487	1-03A-487	47W401-215/40		2	003A		PSA	PSA-3	1	37
1-SNUB-3-3A494	1-03A-494	1-03A-494	47W401-215/59S		2	003A		PSA	PSA-3	1	37
1-SNUB-3-3A497	1-03A-497	1-03A-497	47W401-215/68S		2	003A		PSA	PSA-10	1	37
1-SNUB-3-3A501	1-03A-501	1-03A-501	47W401-215/83A		2	003A		PSA	PSA-1	1	37
1-SNUB-3-3B3	1-03B-003	1-03B-003	47W427-218/C14A		2	003B		PSA	PSA-1/2	1	37
1-SNUB-3-3B35	1-03B-035	1-03B-035	47W427-218/A5A		2	003B		PSA	PSA-3	1	37
1-SNUB-3-3B79	1-03B-079	1-03B-079	47W401-219/5A		2	003B		PSA	PSA-3	1	37
1-SNUB-3-401730	47A401-07-030	47A401-07-030	47W401-219/38		2	003A		PSA	PSA-10	1	37

Appendix F - Snubber Test Plan

Page 5 of 66

Component ID	Support ID	Mark No	ISO Dwg	Support Dwg	Class	Sys	Type	Mfg	Model	DTPG	Plan
1-SNUB-3-401731E	47A401-07-031	47A401-07-031	47W401-212/13		2	003A		PSA	PSA-3	1	37
1-SNUB-3-401731W	47A401-07-031	47A401-07-031	47W401-212/13		2	003A		PSA	PSA-3	1	37
1-SNUB-3-401732	47A401-07-032	47A401-07-032	47W401-212/A44A		2	003A		PSA	PSA-3	1	37
1-SNUB-3-401735	47A401-07-035	47A401-07-035	47W401-215/44		2	003A		PSA	PSA-10	1	37
1-SNUB-3-40181L	47A401-08-001	47A401-08-001	47W401-219A/A14		2	003A		PSA	PSA-3	1	37
1-SNUB-3-40181U	47A401-08-001	47A401-08-001	47W401-219A/A14		2	003A		PSA	PSA-3	1	37
1-SNUB-3-427110	47A427-01-010	47A427-01-010	47W427-204/DS		3	003B		PSA	PSA-1	1	37
1-SNUB-3-42712	47A427-01-002	47A427-01-002	47W401-421/84		3	003B		PSA	PSA-3	1	37
1-SNUB-3-42713	47A427-01-003	47A427-01-003	47W427-204/C		3	003B		PSA	PSA-1	1	37
1-SNUB-3-42715N	47A427-01-005	47A427-01-005	47W427-204/706		3	003B		PSA	PSA-1/4	1	37
1-SNUB-3-42715S	47A427-01-005	47A427-01-005	47W427-204A/706Y		3	003B		PSA	PSA-1/4	1	37
1-SNUB-3-42716	47A427-01-006	47A427-01-006	47W427-204A/706		3	003B		PSA	PSA-1/2	1	37
1-SNUB-3-42717	47A427-01-007	47A427-01-007	47W427-204A/709		3	003B		PSA	PSA-1/4	1	37
1-SNUB-3-42719	47A427-01-009	47A427-01-009	47W427-221/2		3	003B		PSA	PSA-1/2	1	37
1-SNUB-3-427310	47A427-3-10	47A427-3-10	47W427-204/701S		2	003A		PSA	PSA-1	1	37
1-SNUB-3-427311	47A427-3-11	47A427-3-11	47W427-204A/771Y		2	003A		PSA	PSA-1/2	1	37
1-SNUB-3-427338	47A427-03-038	47A427-03-038	47W401-212/623		3	003B		PSA	PSA-1	1	37
1-SNUB-3-427339	47A427-03-039	47A427-03-039	47W401-212/628		3	003B		PSA	PSA-1	1	37
1-SNUB-3-42733N	47A427-03-003	47A427-03-003	47W427-207/30B		3	003B		PSA	PSA-1/2	1	37
1-SNUB-3-42733S	47A427-03-003	47A427-03-003	47W427-207/30B		3	003B		PSA	PSA-1/2	1	37
1-SNUB-3-427340	47A427-03-040	47A427-03-040	47W401-215/586		3	003B		PSA	PSA-1	1	37
1-SNUB-3-427341	47A427-03-041	47A427-03-041	47W401-215/591		3	003B		PSA	PSA-1	1	37

Appendix F - Snubber Test Plan

Page 6 of 66

Component ID	Support ID	Mark No	ISO Dwg	Support Dwg	Class	Sys	Type	Mfg	Model	DTPG	Plan
1-SNUB-3-42735N	47A427-03-005	47A427-03-005	47W427-229/15S		3	003B		PSA	PSA-1/2	1	37
1-SNUB-3-42735S	47A427-03-005	47A427-03-005	47W427-229/15S		3	003B		PSA	PSA-1/2	1	37
1-SNUB-3-42752	47A427-05-002	47A427-05-002	47W401-219/B50S		2	003B		PSA	PSA-3	1	37
1-SNUB-3-42754	47A427-05-004	47A427-05-004	47W401-219/M44		2	003B		PSA	PSA-1	1	37
1-SNUB-3-42755	47A427-05-005	47A427-05-005	47W427-218A/64CC		2	003A		PSA	PSA-3	1	37
1-SNUB-3-42761	47A427-06-001	47A427-06-001	47W401-219 / CI9A		2	003A		PSA	PSA-10	1	37
1-SNUB-3-42774	47A427-07-004	47A427-07-004	47W427-204C		3	003A		PSA	PSA-3	1	37
1-SNUB-3-42778	47A427-07-008	47A427-07-008	47W427-204/729		3	003B		PSA	PSA-1	1	37
1-SNUB-3-42781	47A427-08-001	47A427-08-001	47W427-221/7B		3	003B		PSA	PSA-1/2	1	37
1-SNUB-3-42782	47A427-08-002	47A427-08-002	47W427-204B/51		3	003B		PSA	PSA-1/2	1	37
1-SNUB-3-427820	47A427-08-020	47A427-08-020	47W427-204		3	003A		PSA	PSA-1/4	1	37
1-SNUB-3-427829	47A427-08-029	47A427-08-029	47W427-221/47A		3	003B		PSA	PSA-1/4	1	37
1-SNUB-3-42783	47A427-08-003	47A427-08-003	47W427-204/71		3	003B		PSA	PSA-1/4	1	37
1-SNUB-3-427855	47A427-08-055	47A427-08-055	47W427-204B/838		3	003B		PSA	PSA-1/4	1	37
1-SNUB-3-427856	47A427-08-056	47A427-08-056	47W427-204B DATA PT 859		3	003B		PSA	PSA-1/4	1	37
1-SNUB-3-427857	47A427-08-057	47A427-08-057	ANALYSIS N3-03-05A / 9092		3	003B		PSA	PSA-1/4	1	37
1-SNUB-3-AFWR209E	03B-1AFW-R209	03B-1AFW-R209	47W427-202/222		3	003B		PSA	PSA-1	1	37
1-SNUB-3-AFWR209W	03B-1AFW-R209	03B-1AFW-R209	47W427-202/222		3	003B		PSA	PSA-1	1	37
1-SNUB-3-AFWR212	03B-1AFW-R212	03B-1AFW-R212	47W401-215A/286X		2	003B		PSA	PSA-1	1	37
1-SNUB-3-AFWR213	03B-1AFW-R213	03B-1AFW-R213	47W427-204/736		3	003B		PSA	PSA-1	1	37

Appendix F - Snubber Test Plan

Component ID	Support ID	Mark No	ISO Dwg	Support Dwg	Class	Sys	Type	Mfg	Model	DTPG	Plan
1-SNUB-3-AFWR214	03B-1AFW-R214	03B-1AFW-R214	47W427-204/749		2	003B		PSA	PSA-3	1	37
1-SNUB-3-AFWR216	03B-1AFW-R216	03B-1AFW-R216	47W427-204/701S		2	003B		PSA	PSA-1	1	37
1-SNUB-3-AFWR217	03B-1AFW-R217	03B-1AFW-R217	47W427-204/766		2	003B		PSA	PSA-1	1	37
1-SNUB-3-AFWR219	03B-1AFW-R219	03B-1AFW-R219	47W427-204/771		2	003B		PSA	PSA-3	1	37
1-SNUB-3-AFWR236N	03B-1AFW-R236N	03B-1AFW-R236	47W427-201/134		2	003B		PSA	PSA-3	1	37
1-SNUB-3-AFWR236S	03B-1AFW-R236S	03B-1AFW-R236	47W427-201/134		2	003B		PSA	PSA-3	1	37
1-SNUB-3-AFWR237	03B-1AFW-R237	03B-1AFW-R237	47W427-201/127		2	003B		PSA	PSA-3	1	37
1-SNUB-3-AFWR238	03B-1AFW-R238	03B-1AFW-R238	47W401-215A/28D		2	003B		PSA	PSA-3	1	37
1-SNUB-3-AFWR239E	03B-1AFW-R239E	03B-1AFW-R239	47W427-202/287		2	003B		PSA	PSA-3	1	37
1-SNUB-3-AFWR239W	03B-1AFW-R239W	03B-1AFW-R239	47W427-202/287		2	003B		PSA	PSA-3	1	37
1-SNUB-3-AFWR86	03B-1AFW-R86	03B-1AFW-R086	47W427-204/707		3	003B		PSA	PSA-1/2	1	37
1-SNUB-15-4001123	47A400-11-23	47A400-11-23	47W400-207/411		2	015		PSA	PSA-1	1	37
1-SNUB-15-4001154	47A400-11-54	47A400-11-54	47W400-204/161		2	015		PSA	PSA-1/4	1	37
1-SNUB-15-4001155	47A400-11-55	47A400-11-55	47W400-204/161		2	015		PSA	PSA-1/2	1	37
1-SNUB-15-4006100	47A400-6-100	47A400-6-100	47W400-209/W23		2	015		PSA	PSA-1	1	37
1-SNUB-15-4006101	47A400-6-101	47A400-6-101	47W400-209/W23		2	015		PSA	PSA-1	1	37
1-SNUB-15-4006102	47A400-6-102	47A400-6-102	47W400-209/W21		2	015		PSA	PSA-1	1	37

Appendix F - Snubber Test Plan

Component ID	Support ID	Mark No	ISO Dwg	Support Dwg	Class	Sys	Type	Mfg	Model	DTPG	Plan
1-SNUB-15-4006103	47A400-6-103	47A400-6-103	47W400-209/W19		2	015		PSA	PSA-1/2	1	37
1-SNUB-15-4006104	47A400-6-104	47A400-6-104	47W400-209/W11		2	015		PSA	PSA-1/2	1	37
1-SNUB-15-4006106	47A400-6-106	47A400-6-106	47W400-209/W29		2	015		PSA	PSA-1	1	37
1-SNUB-15-4006108	47A400-6-108	47A400-6-108	47W400-209/W2		2	015		PSA	PSA-1/2	1	37
1-SNUB-15-4006109	47A400-6-109	47A400-6-109	47W400-209/24A		2	015		PSA	PSA-1/2	1	37
1-SNUB-15-4006111	47A400-6-111	47A400-6-111	47W400-209/24X		2	015		PSA	PSA-1	1	37
1-SNUB-15-4006112	47A400-6-112	47A400-6-112	47W400-209/X24C		2	015		PSA	PSA-1	1	37
1-SNUB-15-4006114	47A400-6-114	47A400-6-114	47W400-209/A25		2	015		PSA	PSA-1	1	37
1-SNUB-15-4006115	47A400-6-115	47A400-6-115	47W400-209A/28XA		2	015		PSA	PSA-1/2	1	37
1-SNUB-15-4006118E	47A400-6-118	47A400-6-118	47W400-209A/29		2	015		PSA	PSA-1/2	1	37
1-SNUB-15-4006118W	47A400-6-118	47A400-6-118	47W400-209/29		2	015		PSA	PSA-1/2	1	37
1-SNUB-15-4006119	47A400-6-119	47A400-6-119	47W400-209A/29B		2	015		PSA	PSA-1/4	1	37
1-SNUB-15-4006122	47A400-6-122	47A400-6-122	47W400-209A/31X		2	015		PSA	PSA-1	1	37
1-SNUB-15-4006123	47A400-6-123	47A400-6-123	47W400-209A/81		2	015		PSA	PSA-1/2	1	37
1-SNUB-15-4006126	47A400-6-126	47A400-6-126	47W400-209A/110		2	015		PSA	PSA-3	1	37
1-SNUB-15-4006127	47A400-6-127	47A400-6-127	47W400-209A/110		2	015		PSA	PSA-1/4	1	37
1-SNUB-15-4006128	47A400-6-128	47A400-6-128	47W400-209A/34		2	015		PSA	PSA-1/4	1	37

Appendix F - Snubber Test Plan

Page 9 of 66

Component ID	Support ID	Mark No	ISO Dwg	Support Dwg	Class	Sys	Type	Mfg	Model	DTPG	Plan
1-SNUB-15-4006132	47A400-6-132	47A400-6-132	47W400-209/35A		2	015		PSA	PSA-1/4	1	37
1-SNUB-15-4006133	47A400-6-133	47A400-6-133	47W400-209/37		2	015		PSA	PSA-1	1	37
1-SNUB-15-4006134E	47A400-6-134	47A400-6-134	47W400-209/37		2	015		PSA	PSA-10	1	37
1-SNUB-15-4006134W	47A400-6-134	47A400-6-134	47W400-209/37		2	015		PSA	PSA-10	1	37
1-SNUB-15-4006135	47A400-6-135	47A400-6-135	47W400-209/38		2	015		PSA	PSA-3	1	37
1-SNUB-15-4006137	47A400-6-137	47A400-6-137	47W400-209/39		2	015		PSA	PSA-3	1	37
1-SNUB-15-4006149	47A400-6-149	47A400-6-149	47W400-209A/044		2	015		PSA	PSA-3	1	37
1-SNUB-15-4006151	47A400-6-151	47A400-6-151	47W400-209A/046		2	015		PSA	PSA-1	1	37
1-SNUB-15-4006173	47A400-6-173	47A400-6-173	47W400-209/66C		2	015		PSA	PSA-3	1	37
1-SNUB-15-4006179	47A400-6-179	47A400-6-179	47W400-210/15C		2	015		PSA	PSA-1	1	37
1-SNUB-15-4006181	47A400-6-181	47A400-6-181	47W400-210/18N (4538/01)		2	015		PSA	PSA-1	1	37
1-SNUB-15-4006182	47A400-6-182	47A400-6-182	47W400-210/18N		2	015		PSA	PSA-1	1	37
1-SNUB-15-4006183	47A400-6-183	47A400-6-183	47W400-210/18AZ		2	015		PSA	PSA-1	1	37
1-SNUB-15-4006184	47A400-6-184	47A400-6-184	47W400-210/18B (4538/11/12)		2	015		PSA	PSA-1/2	1	37
1-SNUB-15-4006186	47A400-6-186	47A400-6-186	47W400-210/17G		2	015		PSA	PSA-1	1	37
1-SNUB-15-4006188	47A400-6-188	47A400-6-188	47W400-210/18G		2	015		PSA	PSA-1/4	1	37
1-SNUB-15-4006190	47A400-6-190	47A400-6-190	47W400-210/18L		2	015		PSA	PSA-1	1	37

Appendix F - Snubber Test Plan

Page 10 of 66

Component ID	Support ID	Mark No	ISO Dwg	Support Dwg	Class	Sys	Type	Mfg	Model	DTPG	Plan
1-SNUB-15-4006194	47A400-6-194	47A400-6-194	47W400-210a/24		2	015		PSA	PSA-1	1	37
1-SNUB-15-4006196	47A400-6-196	47A400-6-196	47W400-210A/31		2	015		PSA	PSA-1	1	37
1-SNUB-15-4006198	47A400-6-198	47A400-6-198	47W400-210/32A		2	015		PSA	PSA-1/4	1	37
1-SNUB-15-4006199	47A400-6-199	47A400-6-199	47W400-210/32B		2	015		PSA	PSA-1/4	1	37
1-SNUB-15-4006201	47A400-6-201	47A400-6-201	47W400-210/34 A1		2	015		PSA	PSA-3	1	37
1-SNUB-15-4006202	47A400-6-202	47A400-6-202	47W400-210A/CO8A		2	015		PSA	PSA-1	1	37
1-SNUB-15-4006203	47A400-6-203	47A400-6-203	47W400-210/388		2	015		PSA	PSA-3	1	37
1-SNUB-15-4006207	47A400-6-207	47A400-6-207	47W400-210/42B		2	015		PSA	PSA-1/4	1	37
1-SNUB-15-4006218	47A400-6-218	47A400-6-218	47W400-210/49		2	015		PSA	PSA-1	1	37
1-SNUB-15-4006220	47A400-6-220	47A400-6-220	47W400-210/52		2	015		PSA	PSA-1/2	1	37
1-SNUB-15-4006233	47A400-6-233	47A400-6-233	47W400-210/57		2	015		PSA	PSA-1/4	1	37
1-SNUB-15-4006235	47A400-6-235	47A400-6-235	47W400-210/58		2	015		PSA	PSA-3	1	37
1-SNUB-15-4006237	47A400-6-237	47A400-6-237	47W400-210/60		2	015		PSA	PSA-3	1	37
1-SNUB-15-4006238	47A400-6-238	47A400-6-238	47W400-210/63		2	015		PSA	PSA-3	1	37
1-SNUB-15-4006248	47A400-6-248	47A400-6-248	47W400-210/70F		2	015		PSA	PSA-1	1	37
1-SNUB-15-4006259	47A400-6-259	47A400-6-259	47W400-208A/79		2	015		PSA	PSA-1/2	1	37
1-SNUB-15-4006260	47A400-6-260	47A400-6-260	47W400-208/78		2	015		PSA	PSA-1/2	1	37

Appendix F - Snubber Test Plan

Page 11 of 66

Component ID	Support ID	Mark No	ISO Dwg	Support Dwg	Class	Sys	Type	Mfg	Model	DTPG	Plan
1-SNUB-15-4006261	47A400-6-261	47A400-6-261	47W400-208/15 (PO4536/09/01		2	015		PSA	PSA-1	1	37
1-SNUB-15-4006262	47A400-6-262	47A400-6-262	47W400-208/15		2	015		PSA	PSA-1	1	37
1-SNUB-15-4006265	47A400-6-265	47A400-6-265	47W400-208/13		2	015		PSA	PSA-1	1	37
1-SNUB-15-4006268	47A400-6-268	47A400-6-268	47E400-208/6		2	015		PSA	PSA-1/2	1	37
1-SNUB-15-4006271E	47A400-6-271	47A400-6-271	47W400-208/24		2	015		PSA	PSA-3	1	37
1-SNUB-15-4006271W	47A400-6-271	47A400-6-271	47W400-208/24		2	015		PSA	PSA-3	1	37
1-SNUB-15-4006273	4747A400-6-273	4747A400-6-273	47W400-208/26E		2	015		PSA	PSA-1/2	1	37
1-SNUB-15-4006274	47A400-6-274	47A400-6-274	47W400-208/26ES		2	015		PSA	PSA-1/4	1	37
1-SNUB-15-4006275S	47A400-6-275S	47A400-6-275	47W400-208/27A		2	015		PSA	PSA-1	1	37
1-SNUB-15-4006277	47A400-6-277	47A400-6-277	47W400-208/29A		2	015		PSA	PSA-1/4	1	37
1-SNUB-15-4006281	47A400-6-281	47A400-6-281	47W400-208/31		2	015		PSA	PSA-1/2	1	37
1-SNUB-15-400666	47A400-6-66	47A400-6-66	47W400-211/17DC		2	015		PSA	PSA-1	1	37
1-SNUB-15-400669	47A400-6-69	47A400-6-69	47W400-211/15E		2	015		PSA	PSA-1	1	37
1-SNUB-15-400671	47A400-6-71	47A400-6-71	47W400-211A/15F		2	015		PSA	PSA-1	1	37
1-SNUB-15-400672	47A400-6-72	47A400-6-72	47W400-211/15F (4514/7/8/2)		2	015		PSA	PSA-1	1	37
1-SNUB-15-400673	47A400-6-73	47A400-6-73	47W400-211/17XB		2	015		PSA	PSA-1	1	37
1-SNUB-15-400675	47A400-6-75	47A400-6-75	47W400-211/15B		2	015		PSA	PSA-3	1	37

Appendix F - Snubber Test Plan

Page 12 of 66

Component ID	Support ID	Mark No	ISO Dwg	Support Dwg	Class	Sys	Type	Mfg	Model	DTPG	Plan
1-SNUB-15-400676	47A400-6-76	47A400-6-76	47W400-211/13		2	015		PSA	PSA-1/2	1	37
1-SNUB-15-400678	47A400-6-78	47A400-6-78	47W400-211/18		2	015		PSA	PSA-1	1	37
1-SNUB-15-400679	47A400-6-79	47A400-6-79	47W400-211A/019		2	015		PSA	PSA-1/4	1	37
1-SNUB-15-400680	47A400-6-80	47A400-6-80	47W400-211A/32XX		2	015		PSA	PSA-1	1	37
1-SNUB-15-400683S	47A400-6-83	47A400-6-83	47W400-211/74		2	015		PSA	PSA-1/4	1	37
1-SNUB-15-400683W	47A400-6-83	47A400-6-83	47W400-211/74		2	015		PSA	PSA-1/4	1	37
1-SNUB-15-400685	47A400-6-85	47A400-6-85	47W400-211/80		2	015		PSA	PSA-1	1	37
1-SNUB-15-400686	47A400-6-86	47A400-6-86	47W400-211/80		2	015		PSA	PSA-1	1	37
1-SNUB-15-400691	47A400-6-91	47A400-6-91	47W400-211/94		2	015		PSA	PSA-1	1	37
1-SNUB-15-400692	47A400-6-92	47A400-6-92	47W400-211/97		2	015		PSA	PSA-1/2	1	37
1-SNUB-15-400694	47A400-6-94	47A400-6-94	47W400-211/108		2	015		PSA	PSA-1/2	1	37
1-SNUB-15-400699	47A400-6-99	47A400-6-99	47W400-209/W59		2	015		PSA	PSA-1	1	37
1-SNUB-15-400746	47A400-7-46	47A400-7-46	47W400-217/9		2	015		PSA	PSA-1	1	37
1-SNUB-31-920116S	47A920-31-116	47A920-31-116	47W920-200A/OP23		3	031		PSA	PSA-1/4	1	37
1-SNUB-31-920116W	47A920-31-116	47A920-31-116	47W920-200A/OP23		3	031		PSA	PSA-1/4	1	37
1-SNUB-31-920117E	47A920-31-117	47A920-31-117	47W920-201C/OP14		3	031		PSA	PSA-1/4	1	37
1-SNUB-31-920117N	47A920-31-117	47A920-31-117	47W920-201C/OP14		3	031		PSA	PSA-1/4	1	37

Appendix F - Snubber Test Plan

Page 13 of 66

Component ID	Support ID	Mark No	ISO Dwg	Support Dwg	Class	Sys	Type	Mfg	Model	DTPG	Plan
1-SNUB-31-920118E	47A920-31-118	47A920-31-118	47W920-201B / OP07		3	031		PSA	PSA-1/4	1	37
1-SNUB-31-920118S	47A920-31-118	47A920-31-118	47W920-201/OP07		3	031		PSA	PSA-1/4	1	37
1-SNUB-31-92053E	47A920-39-53	47A920-39-53	47W920-200/OP10		3	031		PSA	PSA-1/4	1	37
1-SNUB-31-92053N	47A920-39-53	47A920-39-53	47W920-200/OP10		3	031		PSA	PSA-1/4	1	37
1-SNUB-62-4061018	47A406-10-18	47A406-10-18	47W406-383/60		1	062		PSA	PSA-1	1	37
1-SNUB-62-406182	47A406-18-2	47A406-18-2	47W406-200B/48Y		2	062		PSA	PSA-3	1	37
1-SNUB-62-40623	47A406-02-003	47A406-02-003	47W406-200/951		2	062		PSA	PSA-1	1	37
1-SNUB-62-40633	47A406-3-3	47A406-3-3	47W432-202/T83		2	062		PSA	PSA-1	1	37
1-SNUB-62-406342	47A406-03-042	47A406-03-042	47W406-206A/MD23		2	062		PSA	PSA-10	1	37
1-SNUB-62-4067125	47A406-7-125	47A406-7-125	47W406-310/14A		2	062		PSA	PSA-1/4	1	37
1-SNUB-62-4067126	47A406-7-126	47A406-7-126	47W406-309/14		2	062		PSA	PSA-1/4	1	37
1-SNUB-62-4067128	47A406-7-128	47A406-7-128	47W406-309B/3460		2	062		PSA	PSA-1/4	1	37
1-SNUB-62-4067129	47A406-7-129	47A406-7-129	47W406-309B/3470		2	062		PSA	PSA-1/4	1	37
1-SNUB-62-4067130	47A406-7-130	47A406-7-130	47W406-309/25D		2	062		PSA	PSA-1/4	1	37
1-SNUB-62-4067131	47A406-7-131	47A406-7-131	47W406-309/20		2	062		PSA	PSA-1/4	1	37
1-SNUB-62-4067132	47A406-7-132	47A406-7-132	47W406-309/15X		2	062		PSA	PSA-1/4	1	37
1-SNUB-62-4067133N	47A406-7-133	47A406-7-133	47W406-309/149		2	062		PSA	PSA-1/4	1	37

Appendix F - Snubber Test Plan

Page 14 of 66

Component ID	Support ID	Mark No	ISO Dwg	Support Dwg	Class	Sys	Type	Mfg	Model	DTPG	Plan
1-SNUB-62-4067133S	47A406-7-133	47A406-7-133	47W406-309/149		2	062		PSA	PSA-1/4	1	37
1-SNUB-62-4067134	47A406-7-134	47A406-7-134	47W406-309/20		2	062		PSA	PSA-1/4	1	37
1-SNUB-62-4067135	47A406-7-135	47A406-7-135	47W406-309/23		2	062		PSA	PSA-1/4	1	37
1-SNUB-62-4067136	47A406-7-136	47A406-7-136	47W406-309/23		2	062		PSA	PSA-1/4	1	37
1-SNUB-62-4067137L	47A406-7-137	47A406-7-137	47W406-320A/457		2	062		PSA	PSA-10	1	37
1-SNUB-62-4067137U	47A406-7-137	47A406-7-137	47W406-320A/457		2	062		PSA	PSA-10	1	37
1-SNUB-62-4067141E	47A406-7-141	47A406-7-141	47W406-320B/782		2	062		PSA	PSA-3	1	37
1-SNUB-62-4067141W	47A406-7-141	47A406-7-141	47W406-320B/782		2	062		PSA	PSA-3	1	37
1-SNUB-62-4067142L	47A406-7-142	47A406-7-142	47W406-320A/543		2	062		PSA	PSA-3	1	37
1-SNUB-62-4067142U	47A406-7-142	47A406-7-142	47W406-320A/543		2	062		PSA	PSA-3	1	37
1-SNUB-62-406720	47A406-07-020	47A406-07-020	47W406-317/45		2	062		PSA	PSA-1/4	1	37
1-SNUB-62-40673N	47A406-7-3	47A406-7-3	47W406-320B/740,745		2	062		PSA	PSA-1/2	1	37
1-SNUB-62-40673W	47A406-7-3	47A406-7-3	47W406-320B/740,745		2	062		PSA	PSA-1	1	37
1-SNUB-62-40676	47A406-7-6	47A406-7-6	47W406-320/5MM		2	062		PSA	PSA-1/2	1	37
1-SNUB-62-406856	47A406-08-056	47A406-08-056	47W406-317/5		1	062		PSA	PSA-1/2	1	37
1-SNUB-62-406858	A406-8-58	47A406-8-58	47W406-322/11		1	062		PSA	PSA-1/4	1	37
1-SNUB-62-406860E	47A406-8-60	47A406-8-60	47W406-319/1		1	062		PSA	PSA-1/2	1	37

Appendix F - Snubber Test Plan

Page 15 of 66

Component ID	Support ID	Mark No	ISO Dwg	Support Dwg	Class	Sys	Type	Mfg	Model	DTPG	Plan
1-SNUB-62-406860N	47A406-8-60	47A406-8-60	47W406-319/11		1	062		PSA	PSA-1/2	1	37
1-SNUB-62-406865	47A406-8-65	47A406-8-65	47W406-327/260		2	062		PSA	PSA-1/4	1	37
1-SNUB-62-406868	47A406-8-68	47A406-8-68	47W406-209/46		1	062		PSA	PSA-1/4	1	37
1-SNUB-62-406869	47A406-8-69	47A406-8-69	47W406-209/11		1	062		PSA	PSA-1/4	1	37
1-SNUB-62-406871	47A406-8-71	47A406-8-71	47W406-337/C5A		1	062		PSA	PSA-1	1	37
1-SNUB-62-406872	47A406-8-72	47A406-8-72	47W406-337/11A		1	062		PSA	PSA-1	1	37
1-SNUB-62-406919	47A406-9-19	47A406-9-19	47W406-322A		2	062		PSA	PSA-1/4	1	37
1-SNUB-62-406928	47A406-9-28	47A406-9-28	47W406-336/A005,10C		2	062		PSA	PSA-1/2	1	37
1-SNUB-62-406950	47A406-09-050	47A406-09-050	1-47W406-328B/770		1	062		PSA	PSA-1/2	1	37
1-SNUB-62-62A101	1-62A-101	1-62A-101	47W406-316/41Y		1	062		PSA	PSA-1/4	1	37
1-SNUB-62-62A102	1-62A-102	1-62A-102	1-CVC-503/41Z		1	062		PSA	PSA-1/4	1	37
1-SNUB-62-62A105	1-62A-105	1-62A-105	47W406-316/44		1	062		PSA	PSA-1/4	1	37
1-SNUB-62-62A110	1-62A-110	1-62A-110	47W406-316/70Z		2	062		PSA	PSA-1/2	1	37
1-SNUB-62-62A114	1-62A-114	1-62A-114	47W406-316/96		2	062		PSA	PSA-1/2	1	37
1-SNUB-62-62A152	1-62A-152	1-62A-152	47W406-335A/13		2	062		PSA	PSA-1/2	1	37
1-SNUB-62-62A153	1-62A-153	1-62A-153	47W406-335/15		2	062		PSA	PSA-3	1	37
1-SNUB-62-62A171	1-62A-171	1-62A-171	47W406-335A/71		2	062		PSA	PSA-1	1	37

Appendix F - Snubber Test Plan

Page 16 of 66

Component ID	Support ID	Mark No	ISO Dwg	Support Dwg	Class	Sys	Type	Mfg	Model	DTPG	Plan
1-SNUB-62-62A183	1-62A-183	1-62A-183	47W406-338/13		2	062		PSA	PSA-1	1	37
1-SNUB-62-62A184	1-62A-184	1-62A-184	47W406-338/14		2	062		PSA	PSA-1/2	1	37
1-SNUB-62-62A186	1-62A-186	1-62A-186	47W406-338/16		2	062		PSA	PSA-1/2	1	37
1-SNUB-62-62A188	1-62A-188	1-62A-188	1-CVC-504/28A		2	062		PSA	PSA-1/2	1	37
1-SNUB-62-62A190	1-62A-190	1-62A-190	47W406-338/32		2	062		PSA	PSA-1/2	1	37
1-SNUB-62-62A2	1-62A-2	1-62A-002	47W406-317/15		1	062		PSA	PSA-1	1	37
1-SNUB-62-62A201	1-62A-201	1-62A-201	47W406-338/84A		2	062		PSA	PSA-1	1	37
1-SNUB-62-62A203	1-62A-203	1-62A-203	47W406-338/87		2	062		PSA	PSA-1/2	1	37
1-SNUB-62-62A207	1-62A-207	1-62A-207	47W406-338/28C		2	062		PSA	PSA-1/2	1	37
1-SNUB-62-62A21	1-62A-21	1-62A-021	47W406-317A/80		2	062		PSA	PSA-1/2	1	37
1-SNUB-62-62A240	1-62A-240	1-62A-240	47W406-320/10,15		2	062		PSA	PSA-3	1	37
1-SNUB-62-62A242	1-62A-242	1-62A-242	47W406-320/25		2	062		PSA	PSA-1/4	1	37
1-SNUB-62-62A247	1-62A-247	1-62A-247	47W406-320/100		2	062		PSA	PSA-3	1	37
1-SNUB-62-62A254	1-62A-254	1-62A-254	47W406-320B/662		2	062		PSA	PSA-1/2	1	37
1-SNUB-62-62A262	1-62A-262	1-62A-262	47W406-320A/260		2	062		PSA	PSA-1	1	37
1-SNUB-62-62A269	1-62A-269	1-62A-269	47W406-320B/848		2	062		PSA	PSA-1	1	37
1-SNUB-62-62A291	1-62A-291	1-62A-291	47W406-328/8		1	062		PSA	PSA-1	1	37

Appendix F - Snubber Test Plan

Page 17 of 66

Component ID	Support ID	Mark No	ISO Dwg	Support Dwg	Class	Sys	Type	Mfg	Model	DTPG	Plan
1-SNUB-62-62A292	1-62A-292	1-62A-292	47W406-328/12		1	062		PSA	PSA-3	1	37
1-SNUB-62-62A294	1-62A-294	1-62A-294	47W406-328/14A		1	062		PSA	PSA-1	1	37
1-SNUB-62-62A31	1-62A-31	1-62A-031	0600200-08-02/CO4A		1	062		PSA	PSA-1	1	37
1-SNUB-62-62A311	1-62A-311	1-62A-311	47W406-328/150		1	062		PSA	PSA-1/2	1	37
1-SNUB-62-62A317	1-62A-317	1-62A-317	47W406-328/150		1	062		PSA	PSA-1/2	1	37
1-SNUB-62-62A318	1-62A-318	1-62A-318	47W465-206D/X210		1	062		PSA	PSA-1	1	37
1-SNUB-62-62A319	1-62A-319	1-62A-319	47W465-206D/X210		1	062		PSA	PSA-1	1	37
1-SNUB-62-62A32	1-62A-32	1-62A-032	1-47W406-381B/CA5A		1	062		PSA	PSA-1/4	1	37
1-SNUB-62-62A320	1-62A-320	1-62A-320	47W406-321A/C06A		2	062		PSA	PSA-1/4	1	37
1-SNUB-62-62A322	1-62A-322	1-62A-322	47W406-321A/A7		2	062		PSA	PSA-1/4	1	37
1-SNUB-62-62A325	1-62A-325	1-62A-325	47W406-321A/13A		2	062		PSA	PSA-1/2	1	37
1-SNUB-62-62A33	1-62A-33	1-62A-033	600200-8-2/48		1	062		PSA	PSA-1/4	1	37
1-SNUB-62-62A34	1-62A-34	1-62A-034	47W406-381B/48A		1	062		PSA	PSA-1/2	1	37
1-SNUB-62-62A342	1-62A-342	1-62A-342	1-47W406-321A/A62		2	062		PSA	PSA-1/2	1	37
1-SNUB-62-62A345	1-62A-345	1-62A-345	47W406-321B/A66		2	062		PSA	PSA-1	1	37
1-SNUB-62-62A349	1-62A-349	1-62A-349	47W406-321/71		2	062		PSA	PSA-1	1	37
1-SNUB-62-62A353	1-62A-353	1-62A-353	47W406-321B/80		2	062		PSA	PSA-1/2	1	37

Appendix F - Snubber Test Plan

Page 18 of 66

Component ID	Support ID	Mark No	ISO Dwg	Support Dwg	Class	Sys	Type	Mfg	Model	DTPG	Plan
1-SNUB-62-62A355	1-62A-355	1-62A-355	47W406-321B/86		2	062		PSA	PSA-3	1	37
1-SNUB-62-62A357L	1-62A-357	1-62A-357	47W406-321 / 92		2	062		PSA	PSA-3	1	37
1-SNUB-62-62A357U	1-62A-357	1-62A-357	47W406-321B/92		2	062		PSA	PSA-3	1	37
1-SNUB-62-62A358	1-62A-358	1-62A-358	47W406-321B/95		2	062		PSA	PSA-3	1	37
1-SNUB-62-62A360	1-62A-360	1-62A-360	47W406-321 / 101		2	062		PSA	PSA-3	1	37
1-SNUB-62-62A362	1-62A-362	1-62A-362	47W406-321B/105		2	062		PSA	PSA-1	1	37
1-SNUB-62-62A363	1-62A-363	1-62A-363	47W406-321/106		2	062		PSA	PSA-1	1	37
1-SNUB-62-62A364	1-62A-364	1-62A-364	47W406-321B/A06,B06		2	062		PSA	PSA-1/2	1	37
1-SNUB-62-62A366	1-62A-366	1-62A-366	47W406-321/108		1	062		PSA	PSA-1	1	37
1-SNUB-62-62A369	1-62A-369	1-62A-369	47W406-321/125		2	062		PSA	PSA-1/4	1	37
1-SNUB-62-62A371	1-62A-371	1-62A-371	47W406-321/129		2	062		PSA	PSA-1/2	1	37
1-SNUB-62-62A374	1-62A-374	1-62A-374	47W406-321/141		2	062		PSA	PSA-1/4	1	37
1-SNUB-62-62A377	1-62A-377	1-62A-377	47W406-321/144		2	062		PSA	PSA-1	1	37
1-SNUB-62-62A379	1-62A-379	1-62A-379	47W406-321/146		2	062		PSA	PSA-1/4	1	37
1-SNUB-62-62A380	1-62A-380	1-62A-380	47W406-321/149		2	062		PSA	PSA-1	1	37
1-SNUB-62-62A382	1-62A-382	1-62A-382	47W406-321/155		2	062		PSA	PSA-1/2	1	37
1-SNUB-62-62A4	1-62A-4	1-62A-004	47W406-317		1	062		PSA	PSA-1/4	1	37

Appendix F - Snubber Test Plan

Page 19 of 66

Component ID	Support ID	Mark No	ISO Dwg	Support Dwg	Class	Sys	Type	Mfg	Model	DTPG	Plan
1-SNUB-62-62A402	1-62A-402	1-62A-402	47W406-337/11		1	062		PSA	PSA-1/4	1	37
1-SNUB-62-62A406	1-62A-406	1-62A-406	47W406-337/31		2	062		PSA	PSA-1/4	1	37
1-SNUB-62-62A407	1-62A-407	1-62A-407	47W406-337/A33		2	062		PSA	PSA-1/2	1	37
1-SNUB-62-62A430	1-62A-430	1-62A-430	47W406-319/7A		1	062		PSA	PSA-1/4	1	37
1-SNUB-62-62A431	1-62A-431	1-62A-431	47W406-319/38A		1	062		PSA	PSA-1/2	1	37
1-SNUB-62-62A434	1-62A-434	1-62A-434	47W406-319/31A		1	062		PSA	PSA-1/2	1	37
1-SNUB-62-62A461	1-62A-461	1-62A-461	47W406-209/11		1	062		PSA	PSA-1/4	1	37
1-SNUB-62-62A466E	1-62A-466	1-62A-466	47W406-209/33		2	062		PSA	PSA-1/4	1	37
1-SNUB-62-62A466W	1-62A-466	1-62A-466	47W406-209/33		2	062		PSA	PSA-1/4	1	37
1-SNUB-62-62A48	1-62A-48	1-62A-048	1-47W406-381/104		2	062		PSA	PSA-1/4	1	37
1-SNUB-62-62A491	1-62A-491	1-62A-491	600200-8-18/5		2	062		PSA	PSA-1/4	1	37
1-SNUB-62-62A495	1-62A-495	1-62A-495	600200-8-18/23A		1	062		PSA	PSA-1/4	1	37
1-SNUB-62-62A499	1-62A-499	1-62A-499	600200-8-18/3		2	062		PSA	PSA-1/4	1	37
1-SNUB-62-62A533	1-62A-533	1-62A-533	47W406-320B/665		2	062		PSA	PSA-1/2	1	37
1-SNUB-62-62A534	1-62A-534	1-62A-534	47W406-320B/700		2	062		PSA	PSA-1	1	37
1-SNUB-62-62A538	1-62A-538	1-62A-538	47W406-320A/595		2	062		PSA	PSA-3	1	37
1-SNUB-62-62A555	1-62A-555	1-62A-555	1-CVC-510-1/184		2	062		PSA	PSA-1/4	1	37

Appendix F - Snubber Test Plan

Page 20 of 66

Component ID	Support ID	Mark No	ISO Dwg	Support Dwg	Class	Sys	Type	Mfg	Model	DTPG	Plan
1-SNUB-62-62A556	1-62A-556	1-62A-556	47W406-321A/184		2	062		PSA	PSA-1/2	1	37
1-SNUB-62-62A557	1-62A-557	1-62A-557	47W406-321/160		2	062		PSA	PSA-1	1	37
1-SNUB-62-62A559	1-62A-559	1-62A-559	47W406-321/162		2	062		PSA	PSA-3	1	37
1-SNUB-62-62A560	1-62A-560	1-62A-560	47W406-321/163		2	062		PSA	PSA-1	1	37
1-SNUB-62-62A561	1-62A-561	1-62A-561	47W406-321/164		2	062		PSA	PSA-1	1	37
1-SNUB-62-62A562	1-62A-562	1-62A-562	47W406-321/166		2	062		PSA	PSA-3	1	37
1-SNUB-62-62A563	1-62A-563	1-62A-563	47W406-321/170		1	062		PSA	PSA-1	1	37
1-SNUB-62-62A565	1-62A-565	1-62A-565	47W406-321A/48A		2	062		PSA	PSA-1/2	1	37
1-SNUB-62-62A582	1-62A-582	1-62A-582	47W406-322A/63		2	062		PSA	PSA-1/4	1	37
1-SNUB-62-62A583	1-62A-583	1-62A-583	47W406-322/35		2	062		PSA	PSA-1/4	1	37
1-SNUB-62-62A6	1-62A-006	1-62A-006	47W406-317/29A		1	062		PSA	PSA-1/4	1	37
1-SNUB-62-62A624	1-62A-624	1-62A-624	47W406-320B/850		2	062		PSA	PSA-1	1	37
1-SNUB-62-62A625	1-62A-625	1-62A-625	47W406-320A/265		2	062		PSA	PSA-1/2	1	37
1-SNUB-62-62A630	1-62A-630	1-62A-630	47W406-322A/86		2	062		PSA	PSA-1/4	1	37
1-SNUB-62-62A632	1-62A-632	1-62A-632	47W406-322/45J		2	062		PSA	PSA-1/4	1	37
1-SNUB-62-62A634	1-62A-634	1-62A-634	47W406-322/55		2	062		PSA	PSA-1/4	1	37
1-SNUB-62-62A635	1-62A-635	1-62A-635	47W406-322/57A		2	062		PSA	PSA-1/4	1	37

Appendix F - Snubber Test Plan

Page 21 of 66

Component ID	Support ID	Mark No	ISO Dwg	Support Dwg	Class	Sys	Type	Mfg	Model	DTPG	Plan
1-SNUB-62-62A64	1-62A-064	1-62A-064	0600200-08-02/C07B		1	062		PSA	PSA-1/4	1	37
1-SNUB-62-62A65	1-62A-065	1-62A-065	0600200-08-02/C07B		1	062		PSA	PSA-1/4	1	37
1-SNUB-62-62A670	1-62A-670	1-62A-670	47W406-327/19B		2	062		PSA	PSA-1/4	1	37
1-SNUB-62-62A671	1-62A-671	1-62A-671	47W406-327/19B		2	062		PSA	PSA-1/4	1	37
1-SNUB-62-62A680	1-62A-680	1-62A-680	47W406-327/S1		2	062		PSA	PSA-1/4	1	37
1-SNUB-62-62A702	1-62A-702	1-62A-702	47W406-335/88A		2	062		PSA	PSA-1/4	1	37
1-SNUB-62-62A714	1-62A-714	1-62A-714	47W406-335/84		2	062		PSA	PSA-1/4	1	37
1-SNUB-62-62A722	1-62A-722	1-62A-722	47W406-335/88A		2	062		PSA	PSA-1/4	1	37
1-SNUB-62-62A802	1-62A-802	1-62A-802	47W406-322/8A		2	062		PSA	PSA-1/4	1	37
1-SNUB-62-62A806	1-62A-806	1-62A-806	47W406-322/23		2	062		PSA	PSA-1/4	1	37
1-SNUB-62-62A808	1-62A-808	1-62A-808	47W406-322/23		2	062		PSA	PSA-1/2	1	37
1-SNUB-62-62A809	1-62A-809	1-62A-809	47W406-322/33		2	062		PSA	PSA-1	1	37
1-SNUB-62-62A810	1-62A-810	1-62A-810	47W406-322/26		2	062		PSA	PSA-1/4	1	37
1-SNUB-62-62A821	1-62A-821	1-62A-821	47W406-322/55		1	062		PSA	PSA-1/4	1	37
1-SNUB-62-62A834	1-62A-834	1-62A-834	47W406-322A/89A		2	062		PSA	PSA-1/2	1	37
1-SNUB-62-62A835	1-62A-835	1-62A-835	47W406-322/89A		2	062		PSA	PSA-1/4	1	37
1-SNUB-62-62A865	1-62A-865	1-62A-865	47W406-336/25A		2	062		PSA	PSA-1/4	1	37

Appendix F - Snubber Test Plan

Page 22 of 66

Component ID	Support ID	Mark No	ISO Dwg	Support Dwg	Class	Sys	Type	Mfg	Model	DTPG	Plan
1-SNUB-62-62A866	1-62A-866	1-62A-866	47W406-336/25A		2	062		PSA	PSA-1/4	1	37
1-SNUB-62-62A873	1-62A-873	1-62A-873	47W406-336/15		2	062		PSA	PSA-1/2	1	37
1-SNUB-62-62A9	1-62A-009	1-62A-009	47W406-317/34		2	062		PSA	PSA-1/2	1	37
1-SNUB-62-62A906	1-62A-906	1-62A-906	47W406-327/21		2	062		PSA	PSA-1/4	1	37
1-SNUB-62-62A95	1-62A-095	1-62A-095	47W406-315 / 54B		1	062		PSA	PSA-1/2	1	37
1-SNUB-62-62A97	1-62A-097	1-62A-097	47W406-315/80		2	062		PSA	PSA-1	1	37
1-SNUB-62-CVCR15L	62-1CVC-R015	62-1CVC-R015	47W406-203/42E		2	062		PSA	PSA-1	1	37
1-SNUB-62-CVCR15U	62-1CVC-R015	62-1CVC-R015	47W406-203/42E		2	062		PSA	PSA-1	1	37
1-SNUB-62-CVCR209	62-1CVC-R209	62-1CVC-R209	47W406-340/353		2	062		PSA	PSA-1	1	37
1-SNUB-62-CVCR20L	62-1CVC-R020	62-1CVC-R020	47W406-203/60B		2	062		PSA	PSA-1/2	1	37
1-SNUB-62-CVCR20U	62-1CVC-R020	62-1CVC-R020	47W406-203/60B		2	062		PSA	PSA-1/2	1	37
1-SNUB-62-CVCR224	62-1CVC-R224	62-1CVC-R224	47W406-206 / 653		2	062		PSA	PSA-1/4	1	37
1-SNUB-62-CVCR275	62-1CVC-R275	62-1CVC-R275	47W406-206/21C		2	062		PSA	PSA-3	1	37
1-SNUB-62-CVCR276	62-1CVC-R276	62-1CVC-R276	47W406-206/21B		2	062		PSA	PSA-3	1	37
1-SNUB-62-CVCR50	62-1CVC-R050	62-1CVC-R050	47W406-373/525		2	062		PSA	PSA-3	1	37
1-SNUB-62-CVCR52N	62-1CVC-R052	62-1CVC-R052	47W406-200/42		2	062		PSA	PSA-1	1	37
1-SNUB-62-CVCR52S	62-1CVC-R052	62-1CVC-R052	47W4306-200/42		2	062		PSA	PSA-1	1	37
1-SNUB-62-CVCR61L	62-1CVC-R061	62-1CVC-R061	47W406-200C/61		2	062		PSA	PSA-3	1	37

Appendix F - Snubber Test Plan

Page 23 of 66

Component ID	Support ID	Mark No	ISO Dwg	Support Dwg	Class	Sys	Type	Mfg	Model	DTPG	Plan
1-SNUB-62-CVCR61U	62-1CVC-R061	62-1CVC-R061	47W406-200C/61		2	062		PSA	PSA-3	1	37
1-SNUB-62-CVCR62L	62-1CVC-R062	62-1CVC-R062	47W406-200C/64		2	062		PSA	PSA-3	1	37
1-SNUB-62-CVCR62U	62-1CVC-R062	62-1CVC-R062	47W406-200C/64		2	062		PSA	PSA-3	1	37
1-SNUB-62-CVCR89	62-1CVC-R89	62-1CVC-R89	47W406-201/579		2	062		PSA	PSA-1	1	37
1-SNUB-62-LCVR222	62-1LCV-R222	62-1LCV-R222	47W555-200/55		3	062		PSA	PSA-1	1	37
1-SNUB-62-LCVR42L	62-1LCV-R42	62-1LCV-R42	47W555-200/108		3	062		PSA	PSA-1	1	37
1-SNUB-62-LCVR42U	62-1LCV-R42	62-1LCV-R42	47W555-200/108		3	062		PSA	PSA-1	1	37
1-SNUB-62-LCVR47	62-1LCV-R47	62-1LCV-R47	47W555-200/95		3	062		PSA	PSA-1	1	37
1-SNUB-62-LCVR92	62-1LCV-R92	62-1LCV-R92	47W555-203/125		3	062		PSA	PSA-1/4	1	37
1-SNUB-63-4351013	47A435-10-13	47A435-10-13	47W435-259/377		2	063		PSA	PSA-1/4	1	37
1-SNUB-63-4351014N	A435-10-14	47A435-10-14	47W435-259/367B		2	063		PSA	PSA-1/4	1	37
1-SNUB-63-4351014W	47A435-10-14	47A435-10-14	47W435-259/367B		2	063		PSA	PSA-1/4	1	37
1-SNUB-63-4351015E	47A435-10-15	47A435-10-15	47W435-259/340B		2	063		PSA	PSA-1/4	1	37
1-SNUB-63-4351015N	47A435-10-15	47A435-10-15	47W435-259/340B		2	063		PSA	PSA-1/4	1	37
1-SNUB-63-4351022E	47A435-10-22	47A435-10-22	1-47W435-217A/T264		2	063		PSA	PSA-1/4	1	37
1-SNUB-63-4351022W	47A435-10-22	47A435-10-22	1-47W435-217A/264B		2	063		PSA	PSA-1/4	1	37
1-SNUB-63-4351028	47A435-10-28	47A435-10-28	47W435-259/349		2	063		PSA	PSA-1/4	1	37

Appendix F - Snubber Test Plan

Page 24 of 66

Component ID	Support ID	Mark No	ISO Dwg	Support Dwg	Class	Sys	Type	Mfg	Model	DTPG	Plan
1-SNUB-63-435102E	47A435-10-2	47A435-10-2	47W435-217D/ 297 & 296P		2	063		PSA	PSA-1/4	1	37
1-SNUB-63-435102N	47A435-10-2	47A435-10-2	47W435-217D/297		2	063		PSA	PSA-1/4	1	37
1-SNUB-63-4351031	47A435-10-31	47A435-10-31	47W435-217D/X40X		2	063		PSA	PSA-1/4	1	37
1-SNUB-63-4351041N	47A435-10-41	47A435-10-41	47W435-217C/S255 or T255		2	063		PSA	PSA-1/4	1	37
1-SNUB-63-4351041S	47A435-10-41	47A435-10-41	47W435-281/S255		2	063		PSA	PSA-1/4	1	37
1-SNUB-63-4351044	47A435-10-44	47A435-10-44	47W435-281/255K		2	063		PSA	PSA-1/4	1	37
1-SNUB-63-4351046	47A435-10-46	47A435-10-46	47W435-281/X40Z		2	063		PSA	PSA-1/4	1	37
1-SNUB-63-435104S	47A435-10-4	47A435-10-4	47W435-259/316		2	063		PSA	PSA-1/4	1	37
1-SNUB-63-435104W	47A435-10-4	47A435-10-4	47W435-259/316		2	063		PSA	PSA-1/4	1	37
1-SNUB-63-435145	47A435-1-45	47A435-1-45	47W432-200D/900		2	063		PSA	PSA-1	1	37
1-SNUB-63-435171	47A435-1-71	47A435-01-071	47W432-200D/627		2	063		PSA	PSA-3	1	37
1-SNUB-63-435172	47A435-1-72	47A435-01-072	47W435-200B/731		2	063		PSA	PSA-1	1	37
1-SNUB-63-43519	47A435-1-9	47A435-1-9	47W435-200A/D65		2	063		PSA	PSA-1	1	37
1-SNUB-63-435314L	47A435-03-014	47A435-03-014	47W435-206B/31H		2	063		PSA	PSA-10	1	37
1-SNUB-63-435314U	47A435-03-014	47A435-03-014	47W435-206B/31H		2	063		PSA	PSA-10	1	37
1-SNUB-63-435315N	47A435-03-015	47A435-03-015	47W435-206B/41HZ		2	063		PSA	PSA-10	1	37
1-SNUB-63-435315S	47A435-03-015	47A435-03-015	47W435-206B/41HZ		2	063		PSA	PSA-10	1	37

Appendix F - Snubber Test Plan

Page 25 of 66

Component ID	Support ID	Mark No	ISO Dwg	Support Dwg	Class	Sys	Type	Mfg	Model	DTPG	Plan
1-SNUB-63-43533	47A435-03-003	47A435-03-003	47W435-206B/34H		2	063		PSA	PSA-10	1	37
1-SNUB-63-4356100	47A435-06-100	47A435-06-100	47W435-206/60S		2	063		PSA	PSA-3	1	37
1-SNUB-63-4356101S	47A435-6-101	47A435-6-101	47W435-260/158C		2	063		PSA	PSA-1/4	1	37
1-SNUB-63-4356101W	47A435-6-101	47A435-6-101	47W435-260/158C		2	063		PSA	PSA-1/4	1	37
1-SNUB-63-4356102	47A435-06-102	47A435-06-102	47W435-217/16		1	063		PSA	PSA-1	1	37
1-SNUB-63-4356103	47A435-06-103	47A435-06-103	47W435-217/9		1	063		PSA	PSA-1/2	1	37
1-SNUB-63-4356108	47A435-06-108	47A435-06-108	47W435-217A/B138		1	063		PSA	PSA-1/4	1	37
1-SNUB-63-435610N	47A435-6-10	47A435-6-10	47W435-260/190S		2	063		PSA	PSA-1/4	1	37
1-SNUB-63-435610W	47A435-6-10	47A435-6-10	47W435-260C / 190C		2	063		PSA	PSA-1/4	1	37
1-SNUB-63-435645N	47A435-6-45	47A435-6-45	47W435-259/250B		2	063		PSA	PSA-1/4	1	37
1-SNUB-63-435645W	47A435-6-45	47A435-6-45	47W435-259/250B		2	063		PSA	PSA-1/4	1	37
1-SNUB-63-435674	47A435-06-074	47A435-06-074	47W435-220/10		2	063		PSA	PSA-3	1	37
1-SNUB-63-43567S	47A435-6-7	47A435-6-7	47W435-259/236		2	063		PSA	PSA-1/4	1	37
1-SNUB-63-43567W	47A435-6-7	47A435-6-7	47W435-259/236		2	063		PSA	PSA-1/4	1	37
1-SNUB-63-435683	47A435-6-83	47A435-6-83	47W435-260/261		2	063		PSA	PSA-1/4	1	37
1-SNUB-63-435684E	47A435-6-84	47A435-6-84	47W435-282/85		2	063		PSA	PSA-1/2	1	37
1-SNUB-63-435684N	47A435-6-84	47A435-6-84	47W435-282/85		2	063		PSA	PSA-1/2	1	37

Appendix F - Snubber Test Plan

Page 26 of 66

Component ID	Support ID	Mark No	ISO Dwg	Support Dwg	Class	Sys	Type	Mfg	Model	DTPG	Plan
1-SNUB-63-435760	47A435-07-060	47A435-07-060	47W435-260C/15		2	063		PSA	PSA-100	1	37
1-SNUB-63-435823	47A435-8-23	47A435-8-23	47W435-222/82EA		2	063		PSA	PSA-1/4	1	37
1-SNUB-63-435835	47A435-08-035	47A435-08-035	47W435-223/5A		1	063		PSA	PSA-1	1	37
1-SNUB-63-435836	47A435-08-036	47A435-08-036	47W435-223		1	063		PSA	PSA-1	1	37
1-SNUB-63-435838	47A435-08-038	47A435-08-038	47W435-223A/C04A		1	063		PSA	PSA-1/4	1	37
1-SNUB-63-435840	47A435-08-040	47A435-08-040	47W435-223/15		1	063		PSA	PSA-1/4	1	37
1-SNUB-63-435874	47A435-8-74	47A435-8-74	47W435-222/82KS		1	063		PSA	PSA-1/4	1	37
1-SNUB-63-435876L	47A435-8-76	47A435-8-76	47W435-220		2	063		PSA	PSA-1/4	1	37
1-SNUB-63-435876U	47A435-8-76	47A435-8-76	47W435-254/938B		2	063		PSA	PSA-1/4	1	37
1-SNUB-63-435884	47A435-8-84	47A435-8-84	47W435-220/82KS		1	063		PSA	PSA-1/4	1	37
1-SNUB-63-435888	47A435-08-088	47A435-08-088	47W435-220/106X		1	063		PSA	PSA-35	1	37
1-SNUB-63-435923E	47A435-9-23	47A435-9-23	47W435-222/755B		2	063		PSA	PSA-1/4	1	37
1-SNUB-63-435923W	47A435-9-23	47A435-9-23	47W435-222/755B		2	063		PSA	PSA-1/4	1	37
1-SNUB-63-435932E	47A435-9-32	47A435-9-32	47W435-222/705B		2	063		PSA	PSA-1/4	1	37
1-SNUB-63-435932W	47A435-9-32	47A435-9-32	47W435-222/705B		2	063		PSA	PSA-1/4	1	37
1-SNUB-63-435978	47A435-09-078	47A435-09-078	47W435-220C/64X		1	063		PSA	PSA-35	1	37
1-SNUB-63-43599N	47A435-9-9	47A435-9-9	47W435-220C/711B		2	063		PSA	PSA-1/4	1	37

Appendix F - Snubber Test Plan

Page 27 of 66

Component ID	Support ID	Mark No	ISO Dwg	Support Dwg	Class	Sys	Type	Mfg	Model	DTPG	Plan
1-SNUB-63-43599S	47A435-9-9	47A435-9-9	47W435-220C/711B		2	063		PSA	PSA-1/4	1	37
1-SNUB-63-437152	47A437-1-52	47A437-1-52	47W435-206D/20R		2	063		PSA	PSA-1/4	1	37
1-SNUB-63-437153	47A437-1-53	47A437-1-53	47W435-206D / 43AR		2	063		PSA	PSA-1/4	1	37
1-SNUB-63-631	1-63-001	1-63-001	47W435-260C/6A		1	063		PSA	PSA-35	1	37
1-SNUB-63-63106	1-63-106	1-63-106	47W435-222/160		2	063		PSA	PSA-1/4	1	37
1-SNUB-63-6311	1-63-011	1-63-011	47W435-261/		1	063		PSA	PSA-1	1	37
1-SNUB-63-63116	1-63-116	1-63-116	47W435-222/C3CF		1	063		PSA	PSA-1/4	1	37
1-SNUB-63-6314	1-63-014	1-63-014	1-200-09-01		2	063		PSA	PSA-3	1	37
1-SNUB-63-63156	1-63-156	1-63-156	47W435-217/127		1	063		PSA	PSA-1/4	1	37
1-SNUB-63-63164	1-63-164	1-63-164	47W435-217/141		1	063		PSA	PSA-1/4	1	37
1-SNUB-63-63169	1-63-169	1-63-169	47W435-217/840		2	063		PSA	PSA-1/4	1	37
1-SNUB-63-6317	1-63-017	1-63-017	200-09-01		2	063		PSA	PSA-3	1	37
1-SNUB-63-63172	1-63-172	1-63-172	47W435-217/34BX		2	063		PSA	PSA-1/4	1	37
1-SNUB-63-6318	1-63-018	1-63-018	47W435-261/39		2	063		PSA	PSA-3	1	37
1-SNUB-63-63185	1-63-185	1-63-185	47W435-217B/103		1	063		PSA	PSA-1/2	1	37
1-SNUB-63-63187	1-63-187	1-63-187	47W435-217B/106		1	063		PSA	PSA-1/2	1	37
1-SNUB-63-6319	1-63-019	1-63-019	47W435-261/39		2	063		PSA	PSA-3	1	37
1-SNUB-63-63202	1-63-202	1-63-202	47W435-216/15		1	063		PSA	PSA-1/2	1	37
1-SNUB-63-6321	1-63-021	1-63-021	47W435-261/41A		2	063		PSA	PSA-3	1	37
1-SNUB-63-6322	1-63-022	1-63-022	47W435-260/42		2	063		PSA	PSA-3	1	37
1-SNUB-63-63224	1-63-224	1-63-224	47W435-216/49		1	063		PSA	PSA-1/2	1	37
1-SNUB-63-63228	1-63-228	1-63-228	47W435-216/53A		1	063		PSA	PSA-1/4	1	37

Appendix F - Snubber Test Plan

Page 28 of 66

Component ID	Support ID	Mark No	ISO Dwg	Support Dwg	Class	Sys	Type	Mfg	Model	DTPG	Plan
1-SNUB-63-6323	1-63-023	1-63-023	47W435-260/46		2	063		PSA	PSA-3	1	37
1-SNUB-63-63236	1-63-236	1-63-236	0600200-09-07/47A		2	063		PSA	PSA-1	1	37
1-SNUB-63-6324	1-63-024	1-63-024	47W435-260/45A		2	063		PSA	PSA-3	1	37
1-SNUB-63-63285	1-63-285	1-63-285	47W435-223A/		1	063		PSA	PSA-1/4	1	37
1-SNUB-63-6329	1-63-029	1-63-029	47W435-260/56		2	063		PSA	PSA-3	1	37
1-SNUB-63-6330	1-63-030	1-63-030	47W435-260 / 56B		2	063		PSA	PSA-3	1	37
1-SNUB-63-6331	1-63-031	1-63-031	47W435-260/59		2	063		PSA	PSA-3	1	37
1-SNUB-63-6332	1-63-032	1-63-032	47W435-260/59		2	063		PSA	PSA-3	1	37
1-SNUB-63-6334	1-63-034	1-63-034	47W435-260/67E		2	063		PSA	PSA-1/4	1	37
1-SNUB-63-63340	1-63-340	1-63-340	47W435-228/11C		1	063		PSA	PSA-35	1	37
1-SNUB-63-63341	1-63-341	1-63-341	47W435-228/11A		1	063		PSA	PSA-10	1	37
1-SNUB-63-63344	1-63-344	1-63-344	47W435-228/17		1	063		PSA	PSA-3	1	37
1-SNUB-63-6335	1-63-035	1-63-035	47W435-260/67E		2	063		PSA	PSA-1/4	1	37
1-SNUB-63-63366	1-63-366	1-63-366	47W435-228/91		1	063		PSA	PSA-10	1	37
1-SNUB-63-63368	1-63-368	1-63-368	47W435-228/C18B		1	063		PSA	PSA-10	1	37
1-SNUB-63-63371	1-63-371	1-63-371	47W435-228D/105		2	063		PSA	PSA-3	1	37
1-SNUB-63-6338	1-63-038	1-63-038	47W435-260B/74		1	063		PSA	PSA-1/4	1	37
1-SNUB-63-63383	1-63-383	1-63-383	47W435-228A/143		2	063		PSA	PSA-1/2	1	37
1-SNUB-63-6339	1-63-039	1-63-039	47W435-261/75		1	063		PSA	PSA-1/4	1	37
1-SNUB-63-63398	1-63-398	1-63-398	47W435-219/28A		2	063		PSA	PSA-1	1	37
1-SNUB-63-63411L	1-63-411L	1-63-411	47W435-219A/63A		2	063		PSA	PSA-3	1	37
1-SNUB-63-63411U	1-63-411U	1-63-411	47W435-219/63A		2	063		PSA	PSA-3	1	37

Appendix F - Snubber Test Plan

Page 29 of 66

Component ID	Support ID	Mark No	ISO Dwg	Support Dwg	Class	Sys	Type	Mfg	Model	DTPG	Plan
1-SNUB-63-6342	1-63-042	1-63-042	47W435-220/C02B		2	063		PSA	PSA-10	1	37
1-SNUB-63-63445	1-63-445	1-63-445	47W435-260/88B		1	063		PSA	PSA-1/4	1	37
1-SNUB-63-63446	1-63-446	1-63-446	47W435-260/88E		1	063		PSA	PSA-1/4	1	37
1-SNUB-63-63452	1-63-452	1-63-452	47W435-260/105		1	063		PSA	PSA-10	1	37
1-SNUB-63-63453	1-63-453	1-63-453	47W435-260A/		1	063		PSA	PSA-35	1	37
1-SNUB-63-63454	1-63-454	1-63-454	47W435-260/107A		1	063		PSA	PSA-10	1	37
1-SNUB-63-63458	1-63-458	1-63-458	47W435-260/114		1	063		PSA	PSA-35	1	37
1-SNUB-63-63459	1-63-459	1-63-459	47W435-260/115		1	063		PSA	PSA-3	1	37
1-SNUB-63-63462	1-63-462	1-63-462	47W435-260/128		1	063		PSA	PSA-3	1	37
1-SNUB-63-63465	1-63-465	1-63-465	47W435-260/143		1	063		PSA	PSA-1/2	1	37
1-SNUB-63-63467	1-63-467	1-63-467	47W435-260		2	063		PSA	PSA-1/4	1	37
1-SNUB-63-63475	1-63-475	1-63-475	47W435-260/A64		2	063		PSA	PSA-1/4	1	37
1-SNUB-63-63476	1-63-476	1-63-476	47W435-260/A64		2	063		PSA	PSA-1/4	1	37
1-SNUB-63-63480	1-63-480	1-63-480	47W435-260/112A		1	063		PSA	PSA-3	1	37
1-SNUB-63-63491	1-63-491	1-63-491	47W435-222/		2	063		PSA	PSA-1/2	1	37
1-SNUB-63-63494	1-63-494	1-63-494	47W435-222/198B		2	063		PSA	PSA-1/4	1	37
1-SNUB-63-63496L	1-63-496	1-63-496	47W435-220C/72A		2	063		PSA	PSA-10	1	37
1-SNUB-63-63496U	1-63-496	1-63-496	47W435-220C/72A		2	063		PSA	PSA-35	1	37
1-SNUB-63-63520	1-63-520	1-63-520	47W435-217/110		1	063		PSA	PSA-1/4	1	37
1-SNUB-63-63523	1-63-523	1-63-523	47W435-217/A15		1	063		PSA	PSA-1	1	37
1-SNUB-63-63526	1-63-526	1-63-526	47W435-217/108		1	063		PSA	PSA-1/4	1	37
1-SNUB-63-63527	1-63-527	1-63-527	47W435-217		1	063		PSA	PSA-1/4	1	37

Appendix F - Snubber Test Plan

Page 30 of 66

Component ID	Support ID	Mark No	ISO Dwg	Support Dwg	Class	Sys	Type	Mfg	Model	DTPG	Plan
1-SNUB-63-63528	1-63-528	1-63-528	47W435-217/49BZ		1	063		PSA	PSA-1/4	1	37
1-SNUB-63-63547	1-63-547	1-63-547	47W435-216/57AX		1	063		PSA	PSA-1/4	1	37
1-SNUB-63-63548	1-63-548	1-63-548	47W435-216/57AZ		1	063		PSA	PSA-1/4	1	37
1-SNUB-63-63549	1-63-549	1-63-549	47W435-216/59B		1	063		PSA	PSA-1/4	1	37
1-SNUB-63-6355	1-63-055	1-63-055	47W435-220/26AA		2	063		PSA	PSA-3	1	37
1-SNUB-63-63571	1-63-571	1-63-571	47W435-223/C10B		2	063		PSA	PSA-1/2	1	37
1-SNUB-63-63572	1-63-572	1-63-572	47W435-223/C17A		2	063		PSA	PSA-1	1	37
1-SNUB-63-63573	1-63-573	1-63-573	47W435-223/28A		1	063		PSA	PSA-1/4	1	37
1-SNUB-63-63584	1-63-584	1-63-584	47W435-228/189		2	063		PSA	PSA-1/4	1	37
1-SNUB-63-63585	1-63-585	1-63-585	47W435-222/160Z		2	063		PSA	PSA-1/4	1	37
1-SNUB-63-63589	1-63-589	1-63-589	47W435-228/30		2	063		PSA	PSA-3	1	37
1-SNUB-63-63590	1-63-590	1-63-590	47W435-228/47		2	063		PSA	PSA-3	1	37
1-SNUB-63-63591	1-63-591	1-63-591	47W435-228/48		2	063		PSA	PSA-10	1	37
1-SNUB-63-63592	1-63-592	1-63-592	47W435-228/50		2	063		PSA	PSA-1	1	
1-SNUB-63-63593	1-63-593	1-63-593	47W435-228/51		2	063		PSA	PSA-3	1	37
1-SNUB-63-63596	1-63-596	1-63-596	47W435-228/C31B		1	063		PSA	PSA-1	1	37
1-SNUB-63-63597	1-63-597	1-63-597	47W435-228/140		1	063		PSA	PSA-1/4	1	37
1-SNUB-63-63598	1-63-598	1-63-598	47W435-228/140		1	063		PSA	PSA-1/2	1	37
1-SNUB-63-63599	1-63-599	1-63-599	47W435-228B/179		2	063		PSA	PSA-1	1	37
1-SNUB-63-63600	1-63-600	1-63-600	47W435-228/189		2	063		PSA	PSA-1/4	1	37
1-SNUB-63-63601	1-63-601	1-63-601	47W435-222/160S		1	063		PSA	PSA-1/4	1	37
1-SNUB-63-63602	1-63-602	1-63-602	47W435-228/17Z		1	063		PSA	PSA-10	1	37
1-SNUB-63-6362	1-63-062	1-63-062	47W435-220/ 39		2	063		PSA	PSA-10	1	37

Appendix F - Snubber Test Plan

Page 31 of 66

Component ID	Support ID	Mark No	ISO Dwg	Support Dwg	Class	Sys	Type	Mfg	Model	DTPG	Plan
1-SNUB-63-6364	1-63-064	1-63-064	47W435-220/44		2	063		PSA	PSA-3	1	37
1-SNUB-63-6365	1-63-065	1-63-065	47W435-220/46S		1	063		PSA	PSA-3	1	37
1-SNUB-63-6366	1-63-066	1-63-066	47W435-220/46		1	063		PSA	PSA-3	1	37
1-SNUB-63-6373	1-63-073	1-63-073	47W435-220C/70		1	063		PSA	PSA-10	1	37
1-SNUB-63-6378	1-63-078	1-63-078	47W435-220/86		2	063		PSA	PSA-3	1	37
1-SNUB-63-6379	1-63-079	1-63-079	47W435-220/86Z		2	063		PSA	PSA-3	1	37
1-SNUB-63-638	1-63-008	1-63-008	47W435-261/16		1	063		PSA	PSA-35	1	37
1-SNUB-63-6381	1-63-081	1-63-081	47W435-220/90S		1	063		PSA	PSA-3	1	37
1-SNUB-63-6394	1-63-094	1-63-094	47W435-220C		1	063		PSA	PSA-1/4	1	37
1-SNUB-63-6396	1-63-096	1-63-096	47W435-222C/139		1	063		PSA	PSA-1/4	1	37
1-SNUB-63-SISR100	63-1SIS-R100	63-1SIS-R100	47W435-205B/PCG		2	063		PSA	PSA-1/4	1	37
1-SNUB-63-SISR109	63-1SIS-R109	63-1SIS-R109	47W435-206B/69H		2	063		PSA	PSA-10	1	37
1-SNUB-63-SISR112	63-1SIS-R112	63-1SIS-R112	47W435-206B/64AH		2	063		PSA	PSA-10	1	37
1-SNUB-63-SISR114	63-1SIS-R114	63-1SIS-R114	47W435-206B/59H		2	063		PSA	PSA-10	1	37
1-SNUB-63-SISR142	63-1SIS-R142	63-1SIS-R142	47W435-206/A75		2	063		PSA	PSA-3	1	37
1-SNUB-63-SISR146	63-1SIS-R146	63-1SIS-R146	47W435-206/A68		2	063		PSA	PSA-3	1	37
1-SNUB-63-SISR147	63-1SIS-R147	63-1SIS-R147	47W435-206/A64		2	063		PSA	PSA-10	1	37
1-SNUB-63-SISR148	63-1SIS-R148	63-1SIS-R148	47W435-206/A62Z		2	063		PSA	PSA-10	1	37
1-SNUB-63-SISR149	63-1SIS-R149	63-1SIS-R149	47W435-206/A62		2	063		PSA	PSA-3	1	37

Appendix F - Snubber Test Plan

Page 32 of 66

Component ID	Support ID	Mark No	ISO Dwg	Support Dwg	Class	Sys	Type	Mfg	Model	DTPG	Plan
1-SNUB-63-SISR151	63-1SIS-R151	63-1SIS-R151	47W435-206/A54		2	063		PSA	PSA-3	1	37
1-SNUB-63-SISR155	63-1SIS-R155	63-1SIS-R155	47W435-206/A50		2	063		PSA	PSA-10	1	37
1-SNUB-63-SISR168	63-1SIS-R168	63-1SIS-R168	47W435-206A/B68		2	063		PSA	PSA-3	1	37
1-SNUB-63-SISR170	63-1SIS-R170	63-1SIS-R170	47W435-206/B60		2	063		PSA	PSA-10	1	37
1-SNUB-63-SISR173	63-1SIS-R173	63-1SIS-R173	47W435-206A/B50		2	063		PSA	PSA-35	1	37
1-SNUB-63-SISR174N	63-1SIS-R174N	63-1SIS-R174	47W435-206A/B50		2	063		PSA	PSA-35	1	37
1-SNUB-63-SISR174S	63-1SIS-R174S	63-1SIS-R174	47W435-206A/B50		2	063		PSA	PSA-35	1	37
1-SNUB-63-SISR17E	63-1SIS-R17	63-1SIS-R17	47W432-200D/840		2	063		PSA	PSA-3	1	37
1-SNUB-63-SISR17W	63-1SIS-R17	63-1SIS-R17	47W432-200D/840		2	063		PSA	PSA-3	1	37
1-SNUB-63-SISR183	63-1SIS-R183	63-1SIS-R183	47W432-222A		2	063		PSA	PSA-1/2	1	37
1-SNUB-63-SISR192	63-1SIS-R192	63-1SIS-R192	47W432-202/M63		2	063		PSA	PSA-1/4	1	37
1-SNUB-63-SISR194	63-1SIS-R194	63-1SIS-R194	47W432-202/M67		2	063		PSA	PSA-1/4	1	37
1-SNUB-63-SISR195	63-1SIS-R195	63-1SIS-R195	47W432-202/M67		2	063		PSA	PSA-1/4	1	37
1-SNUB-63-SISR211	63-1SIS-R211	63-1SIS-R211	47W435-208/60AZ		2	063		PSA	PSA-10	1	37
1-SNUB-63-SISR214	63-1SIS-R214	63-1SIS-R214	47W435-206C/52A		2	063		PSA	PSA-3	1	37
1-SNUB-63-SISR215	63-1SIS-R215	63-1SIS-R215	47W435-208/50A		2	063		PSA	PSA-3	1	37
1-SNUB-63-SISR221	63-1SIS-R221	63-1SIS-R221	47W435-206C/10A		2	063		PSA	PSA-3	1	37

Appendix F - Snubber Test Plan

Page 33 of 66

Component ID	Support ID	Mark No	ISO Dwg	Support Dwg	Class	Sys	Type	Mfg	Model	DTPG	Plan
1-SNUB-63-SISR226	63-1SIS-R226	63-1SIS-R226	47W435-206C/6CA		2	063		PSA	PSA-3	1	37
1-SNUB-63-SISR228	63-1SIS-R228	63-1SIS-R228	47W435-208/31B		2	063		PSA	PSA-3	1	37
1-SNUB-63-SISR230	63-1SIS-R230	63-1SIS-R230	47W435-206D/12B		2	063		PSA	PSA-3	1	37
1-SNUB-63-SISR240N	63-1SIS-R240N	63-1SIS-R240	47W435-208/64B		2	063		PSA	PSA-3	1	37
1-SNUB-63-SISR240S	63-1SIS-R240S	63-1SIS-R240	47W435-208/64B		2	063		PSA	PSA-3	1	37
1-SNUB-63-SISR242	63-1SIS-R242	63-1SIS-R242	47W435-208/60B		2	063		PSA	PSA-35	1	37
1-SNUB-63-SISR245	63-1SIS-R245	63-1SIS-R245	47W435-206D		2	063		PSA	PSA-3	1	37
1-SNUB-63-SISR246	63-1SIS-R246	63-1SIS-R246	47W435-206D/36B		2	063		PSA	PSA-35	1	37
1-SNUB-63-SISR248N	63-1SIS-R248	63-1SIS-R248	47W435-206C/55M		2	063		PSA	PSA-1/4	1	37
1-SNUB-63-SISR248S	63-1SIS-R248	63-1SIS-R248	47W435-206C/55M		2	063		PSA	PSA-1/4	1	37
1-SNUB-63-SISR250	63-1SIS-R250	63-1SIS-R250	47W435-209/60M		2	063		PSA	PSA-1/2	1	37
1-SNUB-63-SISR251	63-1SIS-R251	63-1SIS-R251	47W435-209/65AM		2	063		PSA	PSA-1/4	1	37
1-SNUB-63-SISR254	63-1SIS-R254	63-1SIS-R254	47W435-206D/57R		2	063		PSA	PSA-1/4	1	37
1-SNUB-63-SISR260	63-1SIS-R260	63-1SIS-R260	47W435-206D/13RA		2	063		PSA	PSA-1/4	1	37
1-SNUB-63-SISR263	63-1SIS-R263	63-1SIS-R263	47W435-210/3R		2	063		PSA	PSA-1/4	1	37
1-SNUB-63-SISR264	63-1SIS-R264	63-1SIS-R264	47W435-206D/3R		2	063		PSA	PSA-1/4	1	37
1-SNUB-63-SISR265	63-1SIS-R265	63-1SIS-R265	47W435-206/94RA		2	063		PSA	PSA-1/4	1	37

Appendix F - Snubber Test Plan

Page 34 of 66

Component ID	Support ID	Mark No	ISO Dwg	Support Dwg	Class	Sys	Type	Mfg	Model	DTPG	Plan
1-SNUB-63-SISR268	63-1SIS-R268	63-1SIS-R268	47W435-206D/83R		2	063		PSA	PSA-1	1	37
1-SNUB-63-SISR273	63-1SIS-R273	63-1SIS-R273	47W435-206D/4M		2	063		PSA	PSA-1/2	1	37
1-SNUB-63-SISR275	63-1SIS-R275	63-1SIS-R275	47W435-206D		2	063		PSA	PSA-1/2	1	37
1-SNUB-63-SISR276	63-1SIS-R276	63-1SIS-R276	47W435-209/15M		2	063		PSA	PSA-1/4	1	37
1-SNUB-63-SISR31	63-1SIS-R031	63-1SIS-R031	47W435-200/270		2	063		PSA	PSA-1	1	37
1-SNUB-63-SISR51	63-1SIS-R051	63-1SIS-R051	47W435-205A/AV4		2	063		PSA	PSA-1/4	1	37
1-SNUB-63-SISR85	63-1SIS-R085	63-1SIS-R085	47W435-205/BV4		2	063		PSA	PSA-1/2	1	37
1-SNUB-67-2061224	37A206-12-024	37A206-12-024	37W206-300/17Z		3	067		PSA	PSA-10	1	37
1-SNUB-67-2061225	37A206-12-025	37A206-12-025	37W206-300/17Z		3	067		PSA	PSA-10	1	37
1-SNUB-67-4503110	47A450-03-110	47A450-03-110	47W450-209E/Y30		3	067		PSA	PSA-35	1	37
1-SNUB-67-4503160	47A450-03-160	47A450-03-160	47W450-209E/Y56		3	067		PSA	PSA-3	1	37
1-SNUB-67-4503162	47A450-03-162	47A450-03-162	47W450-209F/Y74		3	067		PSA	PSA-3	1	37
1-SNUB-67-4503163	47A450-03-163	47A450-03-163	47W450-209F/Y80A		3	067		PSA	PSA-3	1	37
1-SNUB-67-4503177	47A450-03-177	47A450-03-177	47W450-209D/682		3	067		PSA	PSA-3	1	37
1-SNUB-67-450386L	47A450-03-086	47A450-03-086	47W450-231/Z1AX		3	067		PSA	PSA-3	1	37
1-SNUB-67-450386U	47A450-03-086	47A450-03-086	47W450-231/Z1AX		3	067		PSA	PSA-3	1	37
1-SNUB-67-450387	47A450-3-087H	47A450-3-087H	47W450-209D/V24		3	067		PSA	PSA-3	1	37

Appendix F - Snubber Test Plan

Page 35 of 66

Component ID	Support ID	Mark No	ISO Dwg	Support Dwg	Class	Sys	Type	Mfg	Model	DTPG	Plan
1-SNUB-67-450399	47A450-03-099	47A450-03-099	47W450-209F/Z9		3	067		PSA	PSA-3	1	37
1-SNUB-67-450425	47A450-4-25	47A450-4-25	47W450-211/87I		3	067		PSA	PSA-1	1	37
1-SNUB-67-4504537	47A450-04-537	47A450-04-537	47W450-217A/124X		3	067		PSA	PSA-3	1	37
1-SNUB-67-4504541	47A450-04-541	47A450-04-541	47W450-209		3	067		PSA	PSA-10	1	37
1-SNUB-67-ERCW128	67-1ERCW-R128	67-1ERCW-R128	47W450-203/68B		3	067		PSA	PSA-3	1	37
1-SNUB-67-ERCW213	67-1ERCW-R213	67-1ERCW-R213	47W450-217A/14W		3	067		PSA	PSA-10	1	37
1-SNUB-67-ERCW365E	67-1ERCW-R365	67-1ERCW-R365	47W450-209C/874		3	067		PSA	PSA-1	1	37
1-SNUB-67-ERCW365W	67-1ERCW-R365	67-1ERCW-R365	47W450-209C/874		3	067		PSA	PSA-1	1	37
1-SNUB-67-ERCW410	67-1ERCW-R410	67-1ERCW-R410	47W450-210/AAA		3	067		PSA	PSA-10	1	37
1-SNUB-67-ERCW459	67-1ERCW-R459	67-1ERCW-R459	47W450-209H/538		3	067		PSA	PSA-10	1	37
1-SNUB-67-ERCW466	67-1ERCW-R466	67-1ERCW-R466	47W450-209F/506A		3	067		PSA	PSA-3	1	37
1-SNUB-67-ERCW468	67-1ERCW-R468	67-1ERCW-R468	47W450-213F/B3A		3	067		PSA	PSA-3	1	37
1-SNUB-67-ERCW567N	67-1ERCW-R567N	67-1ERCW-R567	47W450-249/156B		3	067		PSA	PSA-10	1	37
1-SNUB-67-ERCW567S	67-1ERCW-R567S	67-1ERCW-R567	47W450-249/156B		3	067		PSA	PSA-10	1	37
1-SNUB-67-ERCW595	67-1ERCW-R595	67-1ERCW-R595	47W450-218/190		3	067		PSA	PSA-35	1	37
1-SNUB-68-465266	47A465-02-066	47A465-02-066	47W465-211/A64A		1	068		PSA	PSA-3	1	37
1-SNUB-68-465267	47A465-02-067	47A465-02-067	47W465-211/A64B		1	068		PSA	PSA-3	1	37

Appendix F - Snubber Test Plan

Page 36 of 66

Component ID	Support ID	Mark No	ISO Dwg	Support Dwg	Class	Sys	Type	Mfg	Model	DTPG	Plan
1-SNUB-68-6823L	1-68-023	1-68-023	47W465-206C/28B		1	068		PSA	PSA-1/2	1	37
1-SNUB-68-6823U	1-68-023	1-68-023	47W465-206C/28B		1	068		PSA	PSA-1/2	1	37
1-SNUB-68-6831	1-68-031	1-68-031	47W465-206/45		1	068		PSA	PSA-1/2	1	37
1-SNUB-68-6832	1-68-032	1-68-032	47W465-206/50B		1	068		PSA	PSA-1/4	1	37
1-SNUB-68-6833	1-68-033	1-68-033	47W465-206/50B		1	068		PSA	PSA-1/4	1	37
1-SNUB-68-6834	1-68-034	1-68-034	47W465-206/51		1	068		PSA	PSA-1	1	37
1-SNUB-68-6836	1-68-036	1-68-036	47W465-206B/51B		1	068		PSA	PSA-1/2	1	37
1-SNUB-68-68363	1-68-363	1-68-363	47W406-328		1	068		PSA	PSA-1/2	1	37
1-SNUB-68-68365L	1-68-365	1-68-365	47W406-328/32A		1	068		PSA	PSA-1/4	1	37
1-SNUB-68-68365U	1-68-365	1-68-365	47W406-328/32A		1	068		PSA	PSA-1/4	1	37
1-SNUB-68-68412N	1-68-412N	1-68-412	47W465-211/35		1	068		PSA	PSA-3	1	37
1-SNUB-68-68412S	1-68-412S	1-68-412	47W465-211/35		1	068		PSA	PSA-3	1	37
1-SNUB-68-68415L	1-68-415L	1-68-415	47W465-211/47C		1	068		PSA	PSA-1	1	37
1-SNUB-68-68415U	1-68-415U	1-68-415	47W465-211/47C		1	068		PSA	PSA-1	1	37
1-SNUB-68-6842	1-68-042	1-68-042	1-CVC-501-1/73		1	068		PSA	PSA-1	1	37
1-SNUB-68-68427	1-68-427	1-68-427	47W465-211A/81A		1	068		PSA	PSA-3	1	37
1-SNUB-68-6853	1-68-053	1-68-053	47W465-206/113		1	068		PSA	PSA-1/4	1	37
1-SNUB-68-6880	1-68-080	1-68-080	47W465-211/30		1	068		PSA	PSA-3	1	37
1-SNUB-68-6893	1-68-093	1-68-093	47W465-211/47AA		1	068		PSA	PSA-3	1	37
1-SNUB-68-6896	1-68-096	1-68-096	47W465-211&212/50A		1	068		PSA	PSA-3	1	37

Appendix F - Snubber Test Plan

Page 37 of 66

Component ID	Support ID	Mark No	ISO Dwg	Support Dwg	Class	Sys	Type	Mfg	Model	DTPG	Plan
1-SNUB-70-4642021	47A464-20-21	47A464-20-21	47W464-248/49C		2	070		PSA	PSA-3	1	37
1-SNUB-70-464213	47A464-2-13	47A464-2-13	47W464-204/85		3	070		PSA	PSA-1	1	37
1-SNUB-70-7012	1-70-012	1-70-012	47W464-248/39A		2	070		PSA	PSA-3	1	37
1-SNUB-70-7014	1-70-014	1-70-014	47W464-248/44A		2	070		PSA	PSA-3	1	37
1-SNUB-70-7016	1-70-016	1-70-016	47W464-248/45A		2	070		PSA	PSA-10	1	37
1-SNUB-70-70282	1-70-282	1-70-282	0600200-04-07/16A		3	070		PSA	PSA-1/2	1	37
1-SNUB-70-CCR106N	70-1CC-R106	70-1CC-R106	47W464-201/231X		3	070		PSA	PSA-10	1	37
1-SNUB-70-CCR106S	70-1CC-R106	70-1CC-R106	47W464-201/231X		3	070		PSA	PSA-10	1	37
1-SNUB-70-CCR64	70-1CC-R064	70-1CC-R064	47W464-202/101A		3	070		PSA	PSA-35	1	37
1-SNUB-70-CCR654	70-1CC-R654	70-1CC-R654	47W464-210/E61		3	070		PSA	PSA-1	1	37
1-SNUB-70-CCR79	70-1CC-R079	70-1CC-R079	47W464-202/138		3	070		PSA	PSA-10	1	37
1-SNUB-70-CCR90N	70-1CC-R09O	70-1CC-R09O	47W464-203/22F		3	070		PSA	PSA-3	1	37
1-SNUB-70-CCR90S	70-1CC-R090	70-1CC-R090	47W464-203/22F		3	070		PSA	PSA-3	1	37
1-SNUB-72-43751	47A437-05-001	47A437-05-001	47W437-204/236		2	072		PSA	PSA-10	1	37
1-SNUB-72-43752	47A437-5-2	47A437-5-2	47W437-204/269		2	072		PSA	PSA-3	1	37
1-SNUB-72-43753	47A437-5-3	47A437-5-3	47W437-204/169		2	072		PSA	PSA-3	1	37
1-SNUB-72-CSR1	72-1CS-R001	72-1CS-R001	47W437-200/RHV3		2	072		PSA	PSA-1	1	37
1-SNUB-72-CSR112	72-1CS-R112	72-1CS-R112	47W437-204/1V1		2	072		PSA	PSA-10	1	37
1-SNUB-72-CSR149	72-1CS-R149	72-1CS-R149	47W437-200/119		2	072		PSA	PSA-10	1	37
1-SNUB-72-CSR16	72-1CS-R16	72-1CS-R016	47W437-200/HV1		2	072		PSA	PSA-3	1	37

Appendix F - Snubber Test Plan

Page 38 of 66

Component ID	Support ID	Mark No	ISO Dwg	Support Dwg	Class	Sys	Type	Mfg	Model	DTPG	Plan
1-SNUB-72-CSR18	72-1CS-R018	72-1CS-R018	47W437-200/R145		2	072		PSA	PSA-3	1	37
1-SNUB-72-CSR3	72-1CS-R003	72-1CS-R003	47W437-200A/239		2	072		PSA	PSA-3	1	37
1-SNUB-72-CSR36	72-1CS-R036	72-1CS-R036	47W437-201/109A		2	072		PSA	PSA-1	1	37
1-SNUB-72-CSR37	72-1CS-R037	72-1CS-R037	47W437-201/8		2	072		PSA	PSA-1	1	37
1-SNUB-72-CSR48	72-1CS-R048	72-1CS-R048	47W437-201/215A		2	072		PSA	PSA-3	1	37
1-SNUB-72-CSR54	72-1CS-R54	72-1CS-R54	47W437-201/P5		2	072		PSA	PSA-1/2	1	37
1-SNUB-72-CSR55	72-1CS-R55	72-1CS-R55	47W437-201/P9		2	072		PSA	PSA-1/2	1	37
1-SNUB-72-CSR61	72-1CS-R061	72-1CS-R061	47W437-202/9		2	072		PSA	PSA-1	1	37
1-SNUB-72-CSR68	72-1CS-R068	72-1CS-R068	47W437-202/31B		2	072		PSA	PSA-3	1	37
1-SNUB-74-432131	47A432-01-031	47A432-01-031	47W435-206/A42		2	074		PSA	PSA-3	1	37
1-SNUB-74-43215	47A432-01-005	47A432-01-005	47W435-206A/B40A		2	074		PSA	PSA-10	1	37
1-SNUB-74-43221	47A432-02-001	47A432-02-001	47W435-206A/18S		2	074		PSA	PSA-3	1	37
1-SNUB-74-43233N	47A432-3-003	47A432-3-3	47W435-228A/34		2	074		PSA	PSA-1	1	37
1-SNUB-74-43233S	47A432-3-003	47A432-03-003	47W435-228A/34		2	074		PSA	PSA-1	1	37
1-SNUB-74-43261	47A432-06-001	47A432-06-001	47W435-206A/39S		2	074		PSA	PSA-3	1	37
1-SNUB-74-7411	1-74-011	1-74-011	47W432-215/71		1	074		PSA	PSA-10	1	37
1-SNUB-74-7414	1-74-014	1-74-014	47W432-215A/34A		1	074		PSA	PSA-3	1	37
1-SNUB-74-7415	1-74-015	1-74-015	47W432-215/40B		1	074		PSA	PSA-1/2	1	37
1-SNUB-74-7417	1-74-017	1-74-017	47W432-215/42		1	074		PSA	PSA-1	1	37
1-SNUB-74-7420	1-74-020	1-74-020	47W432-215A/9		1	074		PSA	PSA-3	1	37
1-SNUB-74-747	1-74-007	1-74-007	47W432-215A/17A		1	074		PSA	PSA-35	1	37
1-SNUB-74-748	1-74-008	1-74-008	47W432-215A/19		1	074		PSA	PSA-35	1	37

Appendix F - Snubber Test Plan

Page 39 of 66

Component ID	Support ID	Mark No	ISO Dwg	Support Dwg	Class	Sys	Type	Mfg	Model	DTPG	Plan
1-SNUB-74-RHR17	74-1RHR-R017	74-1RHR-R017	47W432-200C/266		2	074		PSA	PSA-3	1	37
1-SNUB-74-RHR172	74-1RHR-R172	74-1RHR-R172	47W432-222A/F90		2	074		PSA	PSA-1/4	1	37
1-SNUB-74-RHR174	74-1RHR-R174	74-1RHR-R174	47W432-202/F97		2	074		PSA	PSA-1/4	1	37
1-SNUB-74-RHR188	74-1RHR-R188	74-1RHR-R188	47W432-202/T19		2	074		PSA	PSA-1/4	1	37
1-SNUB-74-RHR190L	74-1RHR-R190	74-1RHR-R190	47W432-222/T27A		2	074		PSA	PSA-1/4	1	37
1-SNUB-74-RHR190U	74-1RHR-R190	74-1RHR-R190	47W432-222/T27		2	074		PSA	PSA-1/4	1	37
1-SNUB-74-RHR192L	74-1RHR-R192	74-1RHR-R192	47W432-222/T31		2	074		PSA	PSA-1/4	1	37
1-SNUB-74-RHR192U	74-1RHR-R192	74-1RHR-R192	47W432-222/T31A		2	074		PSA	PSA-1/4	1	37
1-SNUB-74-RHR194L	74-1RHR-R194	74-1RHR-R194	47W432-222/T41		2	074		PSA	PSA-1/4	1	37
1-SNUB-74-RHR194U	74-1RHR-R194	74-1RHR-R194	47W432-222/T41		2	074		PSA	PSA-1/4	1	37
1-SNUB-74-RHR196L	74-1RHR-R196	74-1RHR-R196	47W432-222/T47A		2	074		PSA	PSA-1/4	1	37
1-SNUB-74-RHR196U	74-1RHR-R196	74-1RHR-R196	47W432-222/T47A		2	074		PSA	PSA-1/4	1	37
1-SNUB-74-RHR197	74-1RHR-R197	74-1RHR-R197	47W432-222/T65		2	074		PSA	PSA-1	1	37
1-SNUB-74-RHR200	74-1RHR-R200	74-1RHR-R200	47W432-222/T61		2	074		PSA	PSA-1/2	1	37
1-SNUB-74-RHR37	74-1RHR-R037	74-1RHR-R037	47W432-200/E63		2	074		PSA	PSA-3	1	37
1-SNUB-74-RHR4	74-1RHR-R004	74-1RHR-R004	47W432-200B/330		2	074		PSA	PSA-3	1	37
1-SNUB-74-RHR48	74-1RHR-R048	74-1RHR-R048	47W432-200/130		2	074		PSA	PSA-3	1	37
1-SNUB-74-RHR58N	74-1RHR-R058	74-1RHR-R058	47W432-200/166		2	074		PSA	PSA-1	1	37

Appendix F - Snubber Test Plan

Page 40 of 66

Component ID	Support ID	Mark No	ISO Dwg	Support Dwg	Class	Sys	Type	Mfg	Model	DTPG	Plan
1-SNUB-74-RHR58S	74-1RHR-R058	74-1RHR-R058	47W432-201/D37		2	074		PSA	PSA-1	1	37
1-SNUB-74-RHR96	74-1RHR-R096	74-1RHR-R096	47W432-201/B35		2	074		PSA	PSA-3	1	37
1-SNUB-78-4541204	47A454-1-204	47A454-1-204	47W454-201/C110		3	078		PSA	PSA-1	1	37
1-SNUB-78-FPCR21	78-1FPC-R21	78-1FPC-R21	47W454-201/128		3	078		PSA	PSA-3	1	37
1-SNUB-78-FPCR28	78-1FPC-R28	78-1FPC-R28	47W454-200/286B		3	078		PSA	PSA-1	1	37
1-SNUB-78-FPCR31	78-1FPC-R31	78-1FPC-R31	47W454-200/B80		3	078		PSA	PSA-1	1	37
1-SNUB-78-FPCR43	78-1FPC-R43	78-1FPC-R43	47W454-200A/264		3	078		PSA	PSA-3	1	37
1-SNUB-78-FPCR60L	78-1FPC-R60	78-1FPC-R60	47W454-200B/560		3	078		PSA	PSA-10	1	37
1-SNUB-78-FPCR60U	78-1FPC-R60	78-1FPC-R60	47W454-200B/560		3	078		PSA	PSA-10	1	37
1-SNUB-78-FPCR70	78-1FPC-R70	78-1FPC-R70	47W454-200A/58		3	078		PSA	PSA-3	1	37
1-SNUB-78-FPCR8	78-1FPC-R8	78-1FPC-R8	47W454-201/370		3	078		PSA	PSA-1/4	1	37
1-SNUB-90-60010N	47A600-105-10	47A600-105-10	47W600-406/142		2	090		PSA	PSA-1/2	1	37
1-SNUB-90-60010S	47A600-105-10	47A600-105-10	47W600-406/142		2	090		PSA	PSA-1/2	1	37
1-SNUB-90-60011N	47A600-105-11	47A600-105-11	47W600-407/142		2	090		PSA	PSA-1/2	1	37
1-SNUB-90-60011S	47A600-105-11	47A600-105-11	47W600-407/148		2	090		PSA	PSA-1/2	1	37
1-SNUB-90-60012N	47A600-105-12	47A600-105-12	47W600-407/212		2	090		PSA	PSA-1/2	1	37
1-SNUB-90-60012S	47A600-105-12	47A600-105-12	47W600-407/220		2	090		PSA	PSA-1/2	1	37

Appendix F - Snubber Test Plan

Page 41 of 66

Component ID	Support ID	Mark No	ISO Dwg	Support Dwg	Class	Sys	Type	Mfg	Model	DTPG	Plan
2-SNUB-1-1N		2-01A-303	2-47W400-220	2-01A-303	2	001	M	Pacific Scientific	PSA 35	1C	10%
2-SNUB-1-1S		2-01A-303	2-47W400-220	2-01A-303	2	001	M	Pacific Scientific	PSA 35	1C	10%
2-SNUB-1-2E		2-01A-304	2-47W400-220A	2-01A-304	2	001	M	Pacific Scientific	PSA 10	1B	10%
2-SNUB-1-2W		2-01A-304	2-47W400-220A	2-01A-304	2	001	M	Pacific Scientific	PSA 10	1B	10%
2-SNUB-1-3N		2-01A-307	2-47W400-220	2-01A-307	2	001	M	Pacific Scientific	PSA 35	1C	10%
2-SNUB-1-3S		2-01A-307	2-47W400-220	2-01A-307	2	001	M	Pacific Scientific	PSA 35	1C	10%
2-SNUB-1-4		2-01A-308	2-47W400-220A	2-01A-308	2	001	M	Pacific Scientific	PSA 35	1C	10%
2-SNUB-1-5		2-01A-312	2-47W400-220A	2-01A-312	2	001	M	Pacific Scientific	PSA 100	1C	10%
2-SNUB-1-6		2-01A-313	2-47W400-220A	2-01A-313	2	001	M	Pacific Scientific	PSA 35	1C	10%
2-SNUB-1-7		2-01A-317	2-47W400-220A	2-01A-317	2	001	M	Pacific Scientific	PSA 3	1B	10%
2-SNUB-1-8N		2-01A-343	2-47W400-221	2-01A-343	2	001	M	Pacific Scientific	PSA 35	1C	10%
2-SNUB-1-8S		2-01A-343	2-47W400-221	2-01A-343	2	001	M	Pacific Scientific	PSA 35	1C	10%
2-SNUB-1-9		2-01A-349	2-47W400-221A	2-01A-349	2	001	M	Pacific Scientific	PSA 100	1C	10%
2-SNUB-1-10		2-01A-350	2-47W400-221A	2-01A-350	2	001	M	Pacific Scientific	PSA 35	1C	10%
2-SNUB-1-11		2-01A-348	2-47W400-221A	2-01A-348	2	001	M	Pacific Scientific	PSA 35	1C	10%
2-SNUB-1-12		2-01A-355	2-47W400-221A	2-01A-355	2	001	M	Pacific Scientific	PSA 3	1B	10%
2-SNUB-1-13		2-01A-380	2-47W400-222	2-01A-380	2	001	M	Pacific Scientific	PSA 100	1C	10%

Appendix F - Snubber Test Plan

Page 42 of 66

Component ID	Support ID	Mark No	ISO Dwg	Support Dwg	Class	Sys	Type	Mfg	Model	DTPG	Plan
2-SNUB-1-14N		2-01A-383	2-47W400-222	2-01A-383	2	001	M	Pacific Scientific	PSA 35	1C	10%
2-SNUB-1-14S		2-01A-383	2-47W400-222	2-01A-383	2	001	M	Pacific Scientific	PSA 35	1C	10%
2-SNUB-1-15N		2-01A-389L	2-47W400-222A	2-01A-389L	2	001	M	Pacific Scientific	PSA 10	1B	10%
2-SNUB-1-15S		2-01A-389L	2-47W400-222A	2-01A-389L	2	001	M	Pacific Scientific	PSA 10	1B	10%
2-SNUB-1-16		2-01A-391	2-47W400-222A	2-01A-391	2	001	M	Pacific Scientific	PSA 100	1C	10%
2-SNUB-1-17		2-01A-392	2-47W400-222A	2-01A-392	2	001	M	Pacific Scientific	PSA 35	1C	10%
2-SNUB-1-18		2-01A-397	2-47W400-222A	2-01A-397	2	001	M	Pacific Scientific	PSA 3	1B	10%
2-SNUB-1-19N		2-01A-423	2-47W400-223	2-01A-423	2	001	M	Pacific Scientific	PSA 35	1C	10%
2-SNUB-1-19S		2-01A-423	2-47W400-223	2-01A-423	2	001	M	Pacific Scientific	PSA 35	1C	10%
2-SNUB-1-20		2-01A-428	2-47W400-223A	2-01A-428	2	001	M	Pacific Scientific	PSA 100	1C	10%
2-SNUB-1-21N		2-01A-429	2-47W400-223A	2-01A-429	2	001	M	Pacific Scientific	PSA 3	1B	10%
2-SNUB-1-21S		2-01A-429	2-47W400-223A	2-01A-429	2	001	M	Pacific Scientific	PSA 3	1B	10%
2-SNUB-1-23		2-01A-435	2-47W400-223A	2-01A-435	2	001	M	Pacific Scientific	PSA 100	1C	10%
2-SNUB-1-24		2-01A-439	2-47W400-223A	2-01A-439	2	001	M	Pacific Scientific	PSA 3	1B	10%
2-SNUB-1-26		47A400-11-82	2-47W400-230	47A400-11-82	2	001	M	Pacific Scientific	PSA 1/2	1A	10%
2-SNUB-1-28N		47A400-11-77	2-47W400-207	47A400-11-77	2	001	M	Pacific Scientific	PSA 1/4	1A	10%
2-SNUB-1-28W		47A400-11-77	2-47W400-207	47A400-11-77	2	001	M	Pacific Scientific	PSA 1/2	1A	10%

Appendix F - Snubber Test Plan

Page 43 of 66

Component ID	Support ID	Mark No	ISO Dwg	Support Dwg	Class	Sys	Type	Mfg	Model	DTPG	Plan
2-SNUB-1-408		2-01A-301	2-47W400-220	2-01A-301	2	001	M	Pacific Scientific	PSA 100	1C	10%
2-SNUB-1-409		2-01A-340	2-47W400-221	2-01A-340	2	001	M	Pacific Scientific	PSA 35	1C	10%
2-SNUB-1-410		2-01A-381	2-47W400-222	2-01A-381	2	001	M	Pacific Scientific	PSA 100	1C	10%
2-SNUB-1-411		2-01A-387	2-47W400-222A	2-01A-387	2	001	M	Pacific Scientific	PSA 35	1C	10%
2-SNUB-1-412		2-01A-424	2-47W400-223	2-01A-424	2	001	M	Pacific Scientific	PSA 100	1C	10%
2-SNUB-1-413		47A400-11-76	2-47W400-207	47A400-11-76	2	001	M	Pacific Scientific	PSA 1/2	1A	10%
2-SNUB-1-2SG1A		SGH-1-1-SNB		SGH-1-1-SNB	2	001	H	Paul-Munroe		2	10%
2-SNUB-1-2SG1B		SGH-1-1-SNB		SGH-1-1-SNB	2	001	H	Paul-Munroe		2	10%
2-SNUB-1-2SG1C		SGH-1-1-SNB		SGH-1-1-SNB	2	001	H	Paul-Munroe		2	10%
2-SNUB-1-2SG1D		SGH-1-1-SNB		SGH-1-1-SNB	2	001	H	Paul-Munroe		2	10%
2-SNUB-1-2SG1E		SGH-1-1-SNB		SGH-1-1-SNB	2	001	H	Paul-Munroe		2	10%
2-SNUB-1-2SG2A		SGH-1-2-SNB		SGH-1-2-SNB	2	001	H	Paul-Munroe		2	10%
2-SNUB-1-2SG2B		SGH-1-2-SNB		SGH-1-2-SNB	2	001	H	Paul-Munroe		2	10%
2-SNUB-1-2SG2C		SGH-1-2-SNB		SGH-1-2-SNB	2	001	H	Paul-Munroe		2	10%
2-SNUB-1-2SG2D		SGH-1-2-SNB		SGH-1-2-SNB	2	001	H	Paul-Munroe		2	10%
2-SNUB-1-2SG2E		SGH-1-2-SNB		SGH-1-2-SNB	2	001	H	Paul-Munroe		2	10%
2-SNUB-1-2SG3A		SGH-1-3-SNB		SGH-1-3-SNB	2	001	H	Paul-Munroe		2	10%

Appendix F - Snubber Test Plan

Page 44 of 66

Component ID	Support ID	Mark No	ISO Dwg	Support Dwg	Class	Sys	Type	Mfg	Model	DTPG	Plan
2-SNUB-1-2SG3B		SGH-1-3-SNB		SGH-1-3-SNB	2	001	H	Paul-Munroe		2	10%
2-SNUB-1-2SG3C		SGH-1-3-SNB		SGH-1-3-SNB	2	001	H	Paul-Munroe		2	10%
2-SNUB-1-2SG3D		SGH-1-3-SNB		SGH-1-3-SNB	2	001	H	Paul-Munroe		2	10%
2-SNUB-1-2SG3E		SGH-1-3-SNB		SGH-1-3-SNB	2	001	H	Paul-Munroe		2	10%
2-SNUB-1-2SG4A		SGH-1-4-SNB		SGH-1-4-SNB	2	001	H	Paul-Munroe		2	10%
2-SNUB-1-2SG4B		SGH-1-4-SNB		SGH-1-4-SNB	2	001	H	Paul-Munroe		2	10%
2-SNUB-1-2SG4C		SGH-1-4-SNB		SGH-1-4-SNB	2	001	H	Paul-Munroe		2	10%
2-SNUB-1-2SG4D		SGH-1-4-SNB		SGH-1-4-SNB	2	001	H	Paul-Munroe		2	10%
2-SNUB-1-2SG4E		SGH-1-4-SNB		SGH-1-4-SNB	2	001	H	Paul-Munroe		2	10%
2-SNUB-3-31		2-03A-205	2-47W401-223	2-03A-205	2	003A	M	Pacific Scientific	PSA 100	1C	10%
2-SNUB-3-34		2-03A-244	2-47W401-224	2-03A-244	2	003A	M	Pacific Scientific	PSA 100	1C	10%
2-SNUB-3-35		2-03A-248	2-47W401-224	2-03A-248	2	003A	M	Pacific Scientific	PSA 35	1C	10%
2-SNUB-3-38		2-03A-285	2-47W401-225	2-03A-285	2	003A	M	Pacific Scientific	PSA 35	1C	10%
2-SNUB-3-39		2-03A-289	2-47W401-225	2-03A-289	2	003A	M	Pacific Scientific	PSA 35	1C	10%
2-SNUB-3-40		2-03A-320	2-47W401-226	2-03A-320	2	003A	M	Pacific Scientific	PSA 35	1C	10%
2-SNUB-3-41		2-03A-321	2-47W401-226	2-03A-321	2	003A	M	Pacific Scientific	PSA 35	1C	10%
2-SNUB-3-42		2-03A-323	2-47W401-226	2-03A-323	2	003A	M	Pacific Scientific	PSA 100	1C	10%

Appendix F - Snubber Test Plan

Page 45 of 66

Component ID	Support ID	Mark No	ISO Dwg	Support Dwg	Class	Sys	Type	Mfg	Model	DTPG	Plan
2-SNUB-3-43N		2-03A-328	2-47W401-226	2-03A-328	2	003A	M	Pacific Scientific	PSA 100	1C	10%
2-SNUB-3-46		2-03A-563	2-47W401-227	2-03A-563	2	003A	M	Pacific Scientific	PSA 3	1B	10%
2-SNUB-3-48		2-03B-035	2-47W427-234	2-03B-035	2	003	M	Pacific Scientific	PSA 3	1B	10%
2-SNUB-3-49		2-03B-039	2-47W427-234	2-03B-039	2	003	M	Pacific Scientific	PSA 3	1B	10%
2-SNUB-3-50		2-03A-449	2-47W427-234	2-03A-449	2	003B	M	Pacific Scientific	PSA 10	1B	10%
2-SNUB-3-53		2-03A-455	2-47W427-224	2-03A-455	2	003A	M	Pacific Scientific	PSA 10	1B	10%
2-SNUB-3-54		2-03A-468	2-47W427-224	2-03A-468	2	003A	M	Pacific Scientific	PSA 3	1B	10%
2-SNUB-3-57		47A427-7-9	2-47W427-213	47A427-7-9	3	003	M	Pacific Scientific	PSA 3	1B	10%
2-SNUB-3-58		47A427-7-11	2-47W427-213	47A427-7-11	3	003	M	Pacific Scientific	PSA 3	1B	10%
2-SNUB-3-63		03B-2AFW-R226	2-47W427-231	03B-2AFW-R226	3	003B	M	Pacific Scientific	PSA 1	1B	10%
2-SNUB-3-64		03B-2AFW-R228	2-47W427-231	03B-2AFW-R228	2	003B	M	Pacific Scientific	PSA 3	1B	10%
2-SNUB-3-65		03B-2AFW-R229	2-47W427-231	03B-2AFW-R229	2	003B	M	Pacific Scientific	PSA 3	1B	10%
2-SNUB-3-66		03B-2AFW-R233	2-47W427-231	03B-2AFW-R233	2	003B	M	Pacific Scientific	PSA 3	1B	10%
2-SNUB-3-67		2-03A-369	2-47W401-212	2-03A-369	2	003	M	Pacific Scientific	PSA 10	1B	10%
2-SNUB-3-68		2-03A-370	2-47W401-212	2-03A-370	2	003	M	Pacific Scientific	PSA 3	1B	10%
2-SNUB-3-70B		2-03A-374	2-47W401-212	2-03A-374	2	003	M	Pacific Scientific	PSA 1	1B	10%
2-SNUB-3-70T		2-03A-374	2-47W401-212	2-03A-374	2	003	M	Pacific Scientific	PSA 1	1B	10%

Appendix F - Snubber Test Plan

Page 46 of 66

Component ID	Support ID	Mark No	ISO Dwg	Support Dwg	Class	Sys	Type	Mfg	Model	DTPG	Plan
2-SNUB-3-71		2-03A-377W	2-47W401-212	2-03A-377W	2	003B	M	Pacific Scientific	PSA 3	1B	10%
2-SNUB-3-72		03B-2AFW-R155	2-47W427-209	03B-2AFW-R155	2	003B	M	Pacific Scientific	PSA 1	1B	10%
2-SNUB-3-73B		2-03B-071	2-47W427-219	2-03B-071	2	003B	M	Pacific Scientific	PSA 1	1B	10%
2-SNUB-3-73T		2-03B-071	2-47W427-219	2-03B-071	2	003B	M	Pacific Scientific	PSA 1	1B	10%
2-SNUB-3-74		2-03B-082	2-47W427-219	2-03B-082	2	003B	M	Pacific Scientific	PSA 3	1B	10%
2-SNUB-3-75		2-03A-401	2-47W427-219	2-03A-401	2	003B	M	Pacific Scientific	PSA 3	1B	10%
2-SNUB-3-76		2-03A-402	2-47W427-219	2-03A-402	2	003B	M	Pacific Scientific	PSA 3	1B	10%
2-SNUB-3-77		2-03A-404	2-47W427-219	2-03A-404	2	003B	M	Pacific Scientific	PSA 10	1B	10%
2-SNUB-3-78		2-03A-411	2-47W427-219A	2-03A-411	2	003B	M	Pacific Scientific	PSA 10	1B	10%
2-SNUB-3-79		2-03A-423	2-47W427-219A	2-03A-423	2	003A	M	Pacific Scientific	PSA 10	1B	10%
2-SNUB-3-80		2-03A-426	2-47W427-219A	2-03A-426	2	003A	M	Pacific Scientific	PSA 3	1B	10%
2-SNUB-3-82B		47A401-8-20	2-47W427-219A	47A401-8-20	2	003A	M	Pacific Scientific	PSA 3	1B	10%
2-SNUB-3-82T		47A401-8-20	2-47W427-219A	47A401-8-20	2	003A	M	Pacific Scientific	PSA 3	1B	10%
2-SNUB-3-87		2-03A-527	2-47W401-159	2-03A-527	2	003A	M	Pacific Scientific	PSA 1/2	1A	10%
2-SNUB-3-88		2-03A-582	2-47W401-230	2-03A-582	2	003A	M	Pacific Scientific	PSA 10	1B	10%
2-SNUB-3-89		2-03A-584	2-47W401-230	2-03A-584	2	003A	M	Pacific Scientific	PSA 1	1B	10%
2-SNUB-3-414		2-03A-400	2-47W427-219	2-03A-400	2	003B	M	Pacific Scientific	PSA 3	1B	10%

Appendix F - Snubber Test Plan

Page 47 of 66

Component ID	Support ID	Mark No	ISO Dwg	Support Dwg	Class	Sys	Type	Mfg	Model	DTPG	Plan
2-SNUB-3-415		2-03A-415	2-47W427-219	2-03A-415	2	003B	M	Pacific Scientific	PSA 10	1B	10%
2-SNUB-3-420B		47A427-7-1	2-47W427-231	47A427-7-1	3	003B	M	Pacific Scientific	PSA 1/4	1A	10%
2-SNUB-3-420T		47A427-7-1	2-47W427-231	47A427-7-1	3	003B	M	Pacific Scientific	PSA 1/4	1A	10%
2-SNUB-3-421B		03B-2AFW-R213	2-47W427-231	03B-2AFW-R213	3	003B	M	Pacific Scientific	PSA 1	1B	10%
2-SNUB-3-421T		03B-2AFW-R213	2-47W427-231	03B-2AFW-R213	3	003B	M	Pacific Scientific	PSA 1	1B	10%
2-SNUB-3-422		03B-2AFW-R087	2-47W427-231	03B-2AFW-R087	3	003B	M	Pacific Scientific	PSA 1/4	1A	10%
2-SNUB-3-423		03B-2AFW-R094	2-47W427-231	03B-2AFW-R094	3	003B	M	Pacific Scientific	PSA 1	1B	10%
2-SNUB-3-424N		03B-2AFW-R090	2-47W427-231	03B-2AFW-R090	3	003B	M	Pacific Scientific	PSA 1	1B	10%
2-SNUB-3-424S		03B-2AFW-R090	2-47W427-231	03B-2AFW-R090	3	003B	M	Pacific Scientific	PSA 1	1B	10%
2-SNUB-3-426		03B-2AFW-R232	2-47W427-231	03B-2AFW-R232	2	003B	M	Pacific Scientific	PSA 3	1B	10%
2-SNUB-3-447E		03B-2AFW-R171	2-47W427-216	03B-2AFW-R171	3	003	M	Pacific Scientific	PSA 1/2	1A	10%
2-SNUB-3-447W		03B-2AFW-R171	2-47W427-216	03B-2AFW-R171	3	003	M	Pacific Scientific	PSA 1/2	1A	10%
2-SNUB-3-448		03B-2AFW-R242	2-47W427-216	03B-2AFW-R242	2	003B	M	Pacific Scientific	PSA 3	1B	10%
2-SNUB-3-449		2-03A-480	2-47W427-216A	2-03A-480	2	003A	M	Pacific Scientific	PSA 3	1B	10%
2-SNUB-3-450B		2-03A-482	2-47W427-216A	2-03A-482	2	003A	M	Pacific Scientific	PSA 3	1B	10%
2-SNUB-3-450T		2-03A-482	2-47W427-216A	2-03A-482	2	003A	M	Pacific Scientific	PSA 3	1B	10%
2-SNUB-3-451		2-03A-483	2-47W427-216A	2-03A-483	2	003A	M	Pacific Scientific	PSA 10	1B	10%

Appendix F - Snubber Test Plan

Page 48 of 66

Component ID	Support ID	Mark No	ISO Dwg	Support Dwg	Class	Sys	Type	Mfg	Model	DTPG	Plan
2-SNUB-3-452V		2-03A-485	2-47W427-216A	2-03A-485	2	003A	M	Pacific Scientific	PSA 3	1B	10%
2-SNUB-3-453		2-03A-497	2-47W427-216A	2-03A-497	2	003A	M	Pacific Scientific	PSA 10	1B	10%
2-SNUB-3-454		2-03A-503	2-47W427-216A	2-03A-503	2	003A	M	Pacific Scientific	PSA 3	1B	10%
2-SNUB-3-455E		47A401-8-21	2-47W427-216A	47A401-8-21	2	003A	M	Pacific Scientific	PSA 10	1B	10%
2-SNUB-3-455W		47A401-8-21	2-47W427-216A	47A401-8-21	2	003A	M	Pacific Scientific	PSA 10	1B	10%
2-SNUB-3-456N		2-47A427-3-57	2-47W427-216A	2-47A427-3-57	2	003A	M	Pacific Scientific	PSA 3	1B	10%
2-SNUB-3-456S		2-47A427-3-57	2-47W427-216A	2-47A427-3-57	2	003A	M	Pacific Scientific	PSA 3	1B	10%
2-SNUB-3-513		2-47A401-9-15	2-47W401-230	2-47A401-9-15	2	003A	M	Pacific Scientific	PSA 1/4	1A	10%
2-SNUB-3-522		2-03B-037	2-47W427-234	2-03B-037	2	003B	M	Pacific Scientific	PSA 1	1B	10%
2-SNUB-3-523		2-03A-445	2-47W427-234	2-03A-445	2	003B	M	Pacific Scientific	PSA 10	1B	10%
2-SNUB-3-524B		2-47A401-08-029	2-47W427-224	2-47A401-08-029	2	003A	M	Pacific Scientific	PSA 10	1B	10%
2-SNUB-3-524T		2-47A401-08-029	2-47W427-224	2-47A401-08-029	2	003A	M	Pacific Scientific	PSA 10	1B	10%
2-SNUB-15-91		47A400-7-93	2-47W400-227	47A400-7-93	2	015	M	Pacific Scientific	PSA 1	1B	10%
2-SNUB-15-93E		47A400-6-306	2-47W400-227	47A400-6-306	2	015	M	Pacific Scientific	PSA 1	1B	10%
2-SNUB-15-93W		47A400-6-306	2-47W400-227	47A400-6-306	2	015	M	Pacific Scientific	PSA 1/2	1A	10%
2-SNUB-15-95		47A400-6-310	2-47W400-227	47A400-6-310	2	015	M	Pacific Scientific	PSA 1/2	1A	10%
2-SNUB-15-96		2-01B-003	2-47W400-227	2-01B-003	2	015	M	Pacific Scientific	PSA 1/2	1A	10%

Appendix F - Snubber Test Plan

Page 49 of 66

Component ID	Support ID	Mark No	ISO Dwg	Support Dwg	Class	Sys	Type	Mfg	Model	DTPG	Plan
2-SNUB-15-100		2-01B-095	2-47W400-228A	2-01B-095	2	015	M	Pacific Scientific	PSA 10	1B	10%
2-SNUB-15-101		2-01B-097	2-47W400-228A	2-01B-097	2	015	M	Pacific Scientific	PSA 3	1B	10%
2-SNUB-15-102		47A400-6-356	2-47W400-228	47A400-6-356	2	015	M	Pacific Scientific	PSA 1/2	1A	10%
2-SNUB-15-103		47A400-6-321	2-47W400-229	47A400-6-321	2	015	M	Pacific Scientific	PSA 1/2	1A	10%
2-SNUB-15-104		47A400-6-322	2-47W400-229	47A400-6-322	2	015	M	Pacific Scientific	PSA 1	1B	10%
2-SNUB-15-105		47A400-6-324	2-47W400-229	47A400-6-324	2	015	M	Pacific Scientific	PSA 1	1B	10%
2-SNUB-15-106		47A400-6-328	2-47W400-229	47A400-6-328	2	015	M	Pacific Scientific	PSA 1/2	1A	10%
2-SNUB-15-107		47A400-6-329	2-47W400-229	47A400-6-329	2	015	M	Pacific Scientific	PSA 1	1B	10%
2-SNUB-15-108		2-01B-123	2-47W400-229	2-01B-123	2	015	M	Pacific Scientific	PSA 10	1B	10%
2-SNUB-15-109B		2-01B-128	2-47W400-229	2-01B-128	2	015	M	Pacific Scientific	PSA 1/4	1A	10%
2-SNUB-15-109T		2-01B-128	2-47W400-229	2-01B-128	2	015	M	Pacific Scientific	PSA 1/4	1A	10%
2-SNUB-15-110		2-01B-129	2-47W400-229	2-01B-129	2	015	M	Pacific Scientific	PSA 1	1B	10%
2-SNUB-15-113		2-01B-251	2-47W400-229	2-01B-251	2	015	M	Pacific Scientific	PSA 1	1B	10%
2-SNUB-15-114		2-01B-254	2-47W400-229	2-01B-254	2	015	M	Pacific Scientific	PSA 3	1B	10%
2-SNUB-15-117		47A400-6-364	2-47W400-231	47A400-6-364	2	015	M	Pacific Scientific	PSA 1/2	1A	10%
2-SNUB-15-474		2-01B-099	2-47W400-228A	2-01B-099	2	015	M	Pacific Scientific	PSA 1	1B	10%
2-SNUB-15-475B		2-01B-086	2-47W400-228A	2-01B-086	2	015	M	Pacific Scientific	PSA 10	1B	10%

Appendix F - Snubber Test Plan

Page 50 of 66

Component ID	Support ID	Mark No	ISO Dwg	Support Dwg	Class	Sys	Type	Mfg	Model	DTPG	Plan
2-SNUB-15-475T		2-01B-086	2-47W400-228A	2-01B-086	2	015	M	Pacific Scientific	PSA 10	1B	10%
2-SNUB-15-476		47A400-6-357	2-47W400-228	47A400-6-357	2	015	M	Pacific Scientific	PSA 1/2	1A	10%
2-SNUB-15-514		2-47A400-6-413	2-47W400-212	2-47A400-6-413	2	015	M	Pacific Scientific	PSA 1	1B	10%
2-SNUB-15-515		2-47A400-6-406	2-47W400-212	2-47A400-6-406	2	015	M	Pacific Scientific	PSA 1	1B	10%
2-SNUB-62-120		2-62A-101	2-47W406-361	2-62A-101	1	062	M	Pacific Scientific	PSA 1/4	1A	10%
2-SNUB-62-122		2-62A-110	2-47W406-361	2-62A-110	2	062	M	Pacific Scientific	PSA 1/4	1A	10%
2-SNUB-62-123		2-62A-291	2-47W406-348	2-62A-291	1	062	M	Pacific Scientific	PSA 1	1B	10%
2-SNUB-62-124		2-68-365H	2-47W406-348	2-68-365H	1	062	M	Pacific Scientific	PSA 1	1B	10%
2-SNUB-62-126		2-47A406-14-067	2-47W406-348A	2-47A406-14-067	1	062	M	Pacific Scientific	PSA 1	1B	10%
2-SNUB-62-127		2-62A-589	2-47W406-349A	2-62A-589	2	062	M	Pacific Scientific	PSA 1/4	1A	10%
2-SNUB-62-128		2-62A-630	2-47W406-349A	2-62A-630	2	062	M	Pacific Scientific	PSA 1/4	1A	10%
2-SNUB-62-129		2-62A-802	2-47W406-349A	2-62A-802	2	062	M	Pacific Scientific	PSA 1/4	1A	10%
2-SNUB-62-130		2-62A-808	2-47W406-349A	2-62A-808	2	062	M	Pacific Scientific	PSA 1/4	1A	10%
2-SNUB-62-131		2-62A-809	2-47W406-349A	2-62A-809	2	062	M	Pacific Scientific	PSA 1	1B	10%
2-SNUB-62-132		2-62A-810	2-47W406-349A	2-62A-810	2	062	M	Pacific Scientific	PSA 1/4	1A	10%
2-SNUB-62-133		47A406-13-56	2-47W406-349A	47A406-13-56	2	062	M	Pacific Scientific	PSA 1/4	1A	10%
2-SNUB-62-134		2-62A-680	2-47W406-353	2-62A-680	2	062	M	Pacific Scientific	PSA 1/4	1A	10%

Appendix F - Snubber Test Plan

Page 51 of 66

Component ID	Support ID	Mark No	ISO Dwg	Support Dwg	Class	Sys	Type	Mfg	Model	DTPG	Plan
2-SNUB-62-135		2-47A406-13-90	2-47W406-353	2-47A406-13-90	2	062	M	Pacific Scientific	PSA 1/4	1A	10%
2-SNUB-62-136		2-47A406-13-91	2-47W406-353	2-47A406-13-91	2	062	M	Pacific Scientific	PSA 1/4	1A	10%
2-SNUB-62-137E		47A406-13-36	2-47W406-353	47A406-13-36	2	062	M	Pacific Scientific	PSA 1/4	1A	10%
2-SNUB-62-137W		47A406-13-36	2-47W406-353	47A406-13-36	2	062	M	Pacific Scientific	PSA 1/4	1A	10%
2-SNUB-62-138E		2-47A406-13-87	2-47W406-355	2-47A406-13-87	1	062	M	Pacific Scientific	PSA 1/2	1A	10%
2-SNUB-62-138N		2-47A406-13-87	2-47W406-355	2-47A406-13-87	1	062	M	Pacific Scientific	PSA 1/2	1A	10%
2-SNUB-62-139		47A406-14-46	2-47W406-354	47A406-14-46	2	062	M	Pacific Scientific	PSA 1/4	1A	10%
2-SNUB-62-141		2-62A-494	2-47W406-371	2-62A-494	2	062	M	Pacific Scientific	PSA 1/4	1A	10%
2-SNUB-62-157		2-62A-247	2-47W406-320B	2-62A-247	2	062	M	Pacific Scientific	PSA 3	1B	10%
2-SNUB-62-158N		2-62A-256	2-47W406-320A	2-62A-256	2	062	M	Pacific Scientific	PSA 3	1B	10%
2-SNUB-62-158S		2-62A-256	2-47W406-320A	2-62A-256	2	062	M	Pacific Scientific	PSA 3	1B	10%
2-SNUB-62-158V		2-62A-256	2-47W406-320A	2-62A-256	2	062	M	Pacific Scientific	PSA 1/4	1A	10%
2-SNUB-62-159		2-47A406-12-101	2-47W406-320A	2-47A406-12-101	2	062	M	Pacific Scientific	PSA 1	1B	10%
2-SNUB-62-161		2-62A-269	2-47W406-320A	2-62A-269	2	062	M	Pacific Scientific	PSA 1	1B	10%
2-SNUB-62-162E		2-62A-271	2-47W406-320A	2-62A-271	2	062	M	Pacific Scientific	PSA 3	1B	10%
2-SNUB-62-162W		2-62A-271	2-47W406-320A	2-62A-271	2	062	M	Pacific Scientific	PSA 3	1B	10%
2-SNUB-62-166		2-62A-531	2-47W406-320A	2-62A-531	2	062	M	Pacific Scientific	PSA 3	1B	10%

Appendix F - Snubber Test Plan

Page 52 of 66

Component ID	Support ID	Mark No	ISO Dwg	Support Dwg	Class	Sys	Type	Mfg	Model	DTPG	Plan
2-SNUB-62-169		2-62A-624	2-47W406-320A	2-62A-624	2	062	M	Pacific Scientific	PSA 1	1B	10%
2-SNUB-62-170N		47A406-12-79	2-47W406-320A	47A406-12-79	2	062	M	Pacific Scientific	PSA 1	1B	10%
2-SNUB-62-170S		47A406-12-79	2-47W406-320A	47A406-12-79	2	062	M	Pacific Scientific	PSA 1	1B	10%
2-SNUB-62-170W		47A406-12-79	2-47W406-320A	47A406-12-79	2	062	M	Pacific Scientific	PSA 1	1B	10%
2-SNUB-62-171		47A406-12-82	2-47W406-320A	47A406-12-82	2	062	M	Pacific Scientific	PSA 1	1B	10%
2-SNUB-62-178		2-62A-382	2-47W406-321C	2-62A-382	2	062	M	Pacific Scientific	PSA 1	1B	10%
2-SNUB-62-180		2-62A-358	2-47W406-321B	2-62A-358	2	062	M	Pacific Scientific	PSA 3	1B	10%
2-SNUB-62-182		2-62A-369	2-47W406-321C	2-62A-369	2	062	M	Pacific Scientific	PSA 1/4	1A	10%
2-SNUB-62-183		2-62A-371	2-47W406-321C	2-62A-371	2	062	M	Pacific Scientific	PSA 1/2	1A	10%
2-SNUB-62-184		2-62A-377	2-47W406-321C	2-62A-377	2	062	M	Pacific Scientific	PSA 1	1B	10%
2-SNUB-62-185		2-62A-557	2-47W406-321C	2-62A-557	2	062	M	Pacific Scientific	PSA 1	1B	10%
2-SNUB-62-186		2-62A-559	2-47W406-321C	2-62A-559	2	062	M	Pacific Scientific	PSA 1	1B	10%
2-SNUB-62-187		2-62A-561	2-47W406-321C	2-62A-561	2	062	M	Pacific Scientific	PSA 1	1B	10%
2-SNUB-62-188		2-62A-360	2-47W406-321B	2-62A-360	2	062	M	Pacific Scientific	PSA 3	1B	10%
2-SNUB-62-189		2-62A-362	2-47W406-321B	2-62A-362	2	062	M	Pacific Scientific	PSA 1	1B	10%
2-SNUB-62-191		2-62A-363	2-47W406-321B	2-62A-363	2	062	M	Pacific Scientific	PSA 1	1B	10%
2-SNUB-62-193		2-62A-152	2-47W406-313	2-62A-152	2	062	M	Pacific Scientific	PSA 1	1B	10%

Appendix F - Snubber Test Plan

Page 53 of 66

Component ID	Support ID	Mark No	ISO Dwg	Support Dwg	Class	Sys	Type	Mfg	Model	DTPG	Plan
2-SNUB-62-194		2-62A-153	2-47W406-313	2-62A-153	2	062	M	Pacific Scientific	PSA 3	1B	10%
2-SNUB-62-195N		2-62A-154	2-47W406-313	2-62A-154	2	062	M	Pacific Scientific	PSA 1	1B	10%
2-SNUB-62-195S		2-62A-154	2-47W406-313	2-62A-154	2	062	M	Pacific Scientific	PSA 1	1B	10%
2-SNUB-62-196		2-62A-171	2-47W406-313A	2-62A-171	2	062	M	Pacific Scientific	PSA 1	1B	10%
2-SNUB-62-197		2-62A-174	2-47W406-313A	2-62A-174	2	062	M	Pacific Scientific	PSA 1/4	1A	10%
2-SNUB-62-198		2-62A-702	2-47W406-313A	2-62A-702	2	062	M	Pacific Scientific	PSA 1/4	1A	10%
2-SNUB-62-199		2-62A-707	2-47W406-313A	2-62A-707	2	062	M	Pacific Scientific	PSA 1/2	1A	10%
2-SNUB-62-200		2-62A-714	2-47W406-313A	2-62A-714	2	062	M	Pacific Scientific	PSA 1/4	1A	10%
2-SNUB-62-201		2-62A-720	2-47W406-313A	2-62A-720	2	062	M	Pacific Scientific	PSA 1/4	1A	10%
2-SNUB-62-202		2-62A-722	2-47W406-313A	2-62A-722	2	062	M	Pacific Scientific	PSA 1/2	1A	10%
2-SNUB-62-204		47A406-14-59	2-47W406-313A	47A406-14-59	2	062	M	Pacific Scientific	PSA 1/4	1A	10%
2-SNUB-62-207		62-2CVC-R050	2-47W406-367	62-2CVC-R050	2	062	M	Pacific Scientific	PSA 3	1B	10%
2-SNUB-62-208		62-2CVC-R209	2-47W406-340	62-2CVC-R209	2	062	M	Pacific Scientific	PSA 3	1B	10%
2-SNUB-62-414		2-62A-463	2-47W406-363	2-62A-463	1	062	M	Pacific Scientific	PSA 1/2	1A	10%
2-SNUB-62-417		2-62A-563	2-47W406-321C	2-62A-563	1	062	M	Pacific Scientific	PSA 1	1B	10%
2-SNUB-62-418		2-62A-366	2-47W406-321B	2-62A-366	1	062	M	Pacific Scientific	PSA 1	1B	10%
2-SNUB-62-419		2-62A-320	2-47W406-321	2-62A-320	2	062	M	Pacific Scientific	PSA 1/2	1A	10%

Appendix F - Snubber Test Plan

Page 54 of 66

Component ID	Support ID	Mark No	ISO Dwg	Support Dwg	Class	Sys	Type	Mfg	Model	DTPG	Plan
2-SNUB-62-420		2-62A-357	2-47W406-321B	2-62A-357	2	062	M	Pacific Scientific	PSA 1	1B	10%
2-SNUB-62-428		2-62A-536	2-47W406-320A	2-62A-536	2	062	M	Pacific Scientific	PSA 3	1B	10%
2-SNUB-62-429		2-62A-254	2-47W406-320A	2-62A-254	2	062	M	Pacific Scientific	PSA 1	1B	10%
2-SNUB-62-430		2-62A-533	2-47W406-320A	2-62A-533	2	062	M	Pacific Scientific	PSA 1	1B	10%
2-SNUB-62-431		2-62A-262	2-47W406-320A	2-62A-262	2	062	M	Pacific Scientific	PSA 1/2	1A	10%
2-SNUB-62-432		2-62A-625	2-47W406-320A	2-62A-625	2	062	M	Pacific Scientific	PSA 1/2	1A	10%
2-SNUB-62-433		2-62A-250	2-47W406-320B	2-62A-250	2	062	M	Pacific Scientific	PSA 1/2	1A	10%
2-SNUB-62-434N		2-47A406-12-93	2-47W406-320A	2-47A406-12-93	2	062	M	Pacific Scientific	PSA 3	1B	10%
2-SNUB-62-434S		2-47A406-12-93	2-47W406-320A	2-47A406-12-93	2	062	M	Pacific Scientific	PSA 3	1B	10%
2-SNUB-62-435		2-47A406-12-89	2-47W406-320A	2-47A406-12-89	2	062	M	Pacific Scientific	PSA 1/2	1A	10%
2-SNUB-62-436E		2-47A406-12-94	2-47W406-320A	2-47A406-12-94	2	062	M	Pacific Scientific	PSA 3	1B	10%
2-SNUB-62-436W		2-47A406-12-94	2-47W406-320A	2-47A406-12-94	2	062	M	Pacific Scientific	PSA 3	1B	10%
2-SNUB-62-438B		2-47A406-12-97	2-47W406-320	2-47A406-12-97	2	062	M	Pacific Scientific	PSA 3	1B	10%
2-SNUB-62-438T		2-47A406-12-97	2-47W406-320	2-47A406-12-97	2	062	M	Pacific Scientific	PSA 3	1B	10%
2-SNUB-62-439N		2-47A406-12-98	2-47W406-320	2-47A406-12-98	2	062	M	Pacific Scientific	PSA 3	1B	10%
2-SNUB-62-439S		2-47A406-12-98	2-47W406-320	2-47A406-12-98	2	062	M	Pacific Scientific	PSA 3	1B	10%
2-SNUB-62-466		2-62A-186	2-47W406-352	2-62A-186	2	062	M	Pacific Scientific	PSA 1/4	1A	10%

Appendix F - Snubber Test Plan

Page 55 of 66

Component ID	Support ID	Mark No	ISO Dwg	Support Dwg	Class	Sys	Type	Mfg	Model	DTPG	Plan
2-SNUB-62-505		2-62A-294	2-47W406-348	2-62A-294	1	062	M	Pacific Scientific	PSA 1	1B	10%
2-SNUB-62-507		2-47A406-3-57	2-47W406-314	2-47A406-3-57	2	062	M	Pacific Scientific	PSA 1	1B	10%
2-SNUB-62-508		2-47A406-03-058	2-47W406-314	2-47A406-03-058	2	062	M	Pacific Scientific	PSA 1	1B	10%
2-SNUB-62-509B		62-2CVC-R062	2-47W406-364	62-2CVC-R062	2	062	M	Pacific Scientific	PSA 3	1B	10%
2-SNUB-62-509T		62-2CVC-R062	2-47W406-364	62-2CVC-R062	2	062	M	Pacific Scientific	PSA 3	1B	10%
2-SNUB-62-510B		62-2CVC-R061	2-47W406-364	62-2CVC-R061	2	062	M	Pacific Scientific	PSA 1	1B	10%
2-SNUB-62-510T		62-2CVC-R061	2-47W406-364	62-2CVC-R061	2	062	M	Pacific Scientific	PSA 1	1B	10%
2-SNUB-62-511		2-47A406-02-055	2-47W406-364	2-47A406-02-055	2	062	M	Pacific Scientific	PSA 3	1B	10%
2-SNUB-62-512		2-47A406-13-106	2-47W406-321C	2-47A406-13-106	2	062	M	Pacific Scientific	PSA 1	1B	10%
2-SNUB-62-525		2-47A406-14-087	2-47W406-348	2-47A406-14-087	1	062	M	Pacific Scientific	PSA 1	1B	10%
2-SNUB-62-526		2-47A406-14-086	2-47W406-348A	2-47A406-14-086	1	062	M	Pacific Scientific	PSA 1	1B	10%
2-SNUB-62-527		2-47A406-14-085	2-47W406-348A	2-47A406-14-085	1	062	M	Pacific Scientific	PSA 1	1B	10%
2-SNUB-62-528		2-47A406-14-084	2-47W406-348A	2-47A406-14-084	1	062	M	Pacific Scientific	PSA 1	1B	10%
2-SNUB-62-529		2-62A-319	2-47W406-321A	2-62A-319	1	062	M	Pacific Scientific	PSA 1	1B	10%
2-SNUB-63-209		2-63-001	2-47W435-262	2-63-001	1	063	M	Pacific Scientific	PSA 35	1C	10%
2-SNUB-63-210		2-63-005	2-47W435-262	2-63-005	1	063	M	Pacific Scientific	PSA 3	1B	10%
2-SNUB-63-211		2-63-008	2-47W435-262	2-63-008	1	063	M	Pacific Scientific	PSA 10	1B	10%

Appendix F - Snubber Test Plan

Page 56 of 66

Component ID	Support ID	Mark No	ISO Dwg	Support Dwg	Class	Sys	Type	Mfg	Model	DTPG	Plan
2-SNUB-63-212		2-63-011	2-47W435-262	2-63-011	1	063	M	Pacific Scientific	PSA 1/2	1A	10%
2-SNUB-63-213		2-63-014	2-47W435-262	2-63-014	2	063	M	Pacific Scientific	PSA 3	1B	10%
2-SNUB-63-214		2-63-018	2-47W435-262	2-63-018	2	063	M	Pacific Scientific	PSA 3	1B	10%
2-SNUB-63-215		2-63-019	2-47W435-262	2-63-019	2	063	M	Pacific Scientific	PSA 3	1B	10%
2-SNUB-63-216		2-63-022	2-47W435-262	2-63-022	2	063	M	Pacific Scientific	PSA 3	1B	10%
2-SNUB-63-217		2-63-023	2-47W435-262	2-63-023	2	063	M	Pacific Scientific	PSA 3	1B	10%
2-SNUB-63-218		2-63-024	2-47W435-262	2-63-024	2	063	M	Pacific Scientific	PSA 3	1B	10%
2-SNUB-63-220		2-63-029	2-47W435-262	2-63-029	2	063	M	Pacific Scientific	PSA 3	1B	10%
2-SNUB-63-221		2-63-030	2-47W435-262	2-63-030	2	063	M	Pacific Scientific	PSA 3	1B	10%
2-SNUB-63-222		2-63-031	2-47W435-262	2-63-031	2	063	M	Pacific Scientific	PSA 10	1B	10%
2-SNUB-63-223		2-63-032	2-47W435-262	2-63-032	2	063	M	Pacific Scientific	PSA 10	1B	10%
2-SNUB-63-225		2-63-035	2-47W435-263	2-63-035	2	063	M	Pacific Scientific	PSA 1/4	1A	10%
2-SNUB-63-226E		2-63-038	2-47W435-263	2-63-038	1	063	M	Pacific Scientific	PSA 1/4	1A	10%
2-SNUB-63-226W		2-63-038	2-47W435-263	2-63-038	1	063	M	Pacific Scientific	PSA 1/4	1A	10%
2-SNUB-63-228		2-63-453	2-47W435-262	2-63-453	1	063	M	Pacific Scientific	PSA 35	1C	10%
2-SNUB-63-229		2-63-458	2-47W435-262	2-63-458	1	063	M	Pacific Scientific	PSA 35	1C	10%
2-SNUB-63-230		2-63-459	2-47W435-262	2-63-459	1	063	M	Pacific Scientific	PSA 3	1B	10%

Appendix F - Snubber Test Plan

Page 57 of 66

Component ID	Support ID	Mark No	ISO Dwg	Support Dwg	Class	Sys	Type	Mfg	Model	DTPG	Plan
2-SNUB-63-235		47A435-12-62	2-47W435-263	47A435-12-62	2	063	M	Pacific Scientific	PSA 1/2	1A	10%
2-SNUB-63-236		47A435-12-89	2-47W435-263	47A435-12-89	2	063	M	Pacific Scientific	PSA 1/2	1A	10%
2-SNUB-63-237		47A435-13-060	2-47W435-262	47A435-13-060	1	063	M	Pacific Scientific	PSA 35	1C	10%
2-SNUB-63-239N		47A435-14-80	2-47W435-267A	47A435-14-80	2	063	M	Pacific Scientific	PSA 1/2	1A	10%
2-SNUB-63-239S		47A435-14-80	2-47W435-267A	47A435-14-80	2	063	M	Pacific Scientific	PSA 1/2	1A	10%
2-SNUB-63-242		47A435-15-70	2-47W435-267B	47A435-15-70	2	063	M	Pacific Scientific	PSA 1/4	1A	10%
2-SNUB-63-246		2-63-042	2-47W435-267	2-63-042	2	063	M	Pacific Scientific	PSA 3	1B	10%
2-SNUB-63-247		2-63-043	2-47W435-267	2-63-043	2	063	M	Pacific Scientific	PSA 3	1B	10%
2-SNUB-63-248		2-63-055	2-47W435-267	2-63-055	2	063	M	Pacific Scientific	PSA 3	1B	10%
2-SNUB-63-249		2-63-062	2-47W435-267	2-63-062	2	063	M	Pacific Scientific	PSA 3	1B	10%
2-SNUB-63-250		2-63-064	2-47W435-267	2-63-064	2	063	M	Pacific Scientific	PSA 1	1B	10%
2-SNUB-63-253		2-63-072	2-47W435-267B	2-63-072	1	063	M	Pacific Scientific	PSA 10	1B	10%
2-SNUB-63-254		2-63-078	2-47W435-267	2-63-078	2	063	M	Pacific Scientific	PSA 3	1B	10%
2-SNUB-63-258N		2-63-095L	2-47W435-267B	2-63-095L	2	063	M	Pacific Scientific	PSA 1/4	1A	10%
2-SNUB-63-260		2-63-169	2-47W435-264	2-63-169	2	063	M	Pacific Scientific	PSA 1/4	1A	10%
2-SNUB-63-264		2-63-528	2-47W435-264	2-63-528	2	063	M	Pacific Scientific	PSA 1/2	1A	10%
2-SNUB-63-265		2-63-185	2-47W435-264A	2-63-185	1	063	M	Pacific Scientific	PSA 1/4	1A	10%

Appendix F - Snubber Test Plan

Page 58 of 66

Component ID	Support ID	Mark No	ISO Dwg	Support Dwg	Class	Sys	Type	Mfg	Model	DTPG	Plan
2-SNUB-63-266		2-63-526	2-47W435-264A	2-63-526	1	063	M	Pacific Scientific	PSA 1/4	1A	10%
2-SNUB-63-267		2-63-520	2-47W435-264A	2-63-520	1	063	M	Pacific Scientific	PSA 1/4	1A	10%
2-SNUB-63-268		2-63-156	2-47W435-264A	2-63-156	1	063	M	Pacific Scientific	PSA 1/4	1A	10%
2-SNUB-63-269		2-63-161	2-47W435-264A	2-63-161	1	063	M	Pacific Scientific	PSA 1/4	1A	10%
2-SNUB-63-270		2-63-163	2-47W435-264A	2-63-163	1	063	M	Pacific Scientific	PSA 1/4	1A	10%
2-SNUB-63-271		2-63-164	2-47W435-264A	2-63-164	1	063	M	Pacific Scientific	PSA 1/4	1A	10%
2-SNUB-63-274E		47A435-16-65	2-47W435-265	47A435-16-65	2	063	M	Pacific Scientific	PSA 1/4	1A	10%
2-SNUB-63-277E		47A435-16-55	2-47W435-265	47A435-16-55	2	063	M	Pacific Scientific	PSA 1/4	1A	10%
2-SNUB-63-277S		47A435-16-55	2-47W435-265	47A435-16-55	2	063	M	Pacific Scientific	PSA 1/4	1A	10%
2-SNUB-63-278		47A435-16-51	2-47W435-265	47A435-16-51	2	063	M	Pacific Scientific	PSA 1/4	1A	10%
2-SNUB-63-279N		47A435-16-50	2-47W435-265	47A435-16-50	2	063	M	Pacific Scientific	PSA 1/2	1A	10%
2-SNUB-63-279S		47A435-16-50	2-47W435-265	47A435-16-50	2	063	M	Pacific Scientific	PSA 1/2	1A	10%
2-SNUB-63-280E		47A435-16-21	2-47W435-265A	47A435-16-21	2	063	M	Pacific Scientific	PSA 1/4	1A	10%
2-SNUB-63-280W		47A435-16-21	2-47W435-265A	47A435-16-21	2	063	M	Pacific Scientific	PSA 1/4	1A	10%
2-SNUB-63-282N		47A435-16-34	2-47W435-265A	47A435-16-34	2	063	M	Pacific Scientific	PSA 1/4	1A	10%
2-SNUB-63-282S		47A435-16-34	2-47W435-265A	47A435-16-34	2	063	M	Pacific Scientific	PSA 1/4	1A	10%
2-SNUB-63-283		47A435-16-31	2-47W435-265A	47A435-16-31	2	063	M	Pacific Scientific	PSA 1/4	1A	10%

Appendix F - Snubber Test Plan

Page 59 of 66

Component ID	Support ID	Mark No	ISO Dwg	Support Dwg	Class	Sys	Type	Mfg	Model	DTPG	Plan
2-SNUB-63-284		47A435-16-47	2-47W435-265A	47A435-16-47	2	063	M	Pacific Scientific	PSA 1/4	1A	10%
2-SNUB-63-286N		47A435-16-33	2-47W435-265	47A435-16-33	2	063	M	Pacific Scientific	PSA 1/4	1A	10%
2-SNUB-63-286S		47A435-16-33	2-47W435-265	47A435-16-33	2	063	M	Pacific Scientific	PSA 1/2	1A	10%
2-SNUB-63-289		2-63-365	2-47W435-256	2-63-365	1	063	M	Pacific Scientific	PSA 3	1B	10%
2-SNUB-63-290		2-63-592	2-47W435-253	2-63-592	2	063	M	Pacific Scientific	PSA 3	1B	10%
2-SNUB-63-291V		47A432-3-06	2-47W435-256	47A432-3-06	1	063	M	Pacific Scientific	PSA 3	1B	10%
2-SNUB-63-292		47A432-3-08	2-47W435-256	47A432-3-08	1	063	M	Pacific Scientific	PSA 10	1B	10%
2-SNUB-63-293		2-63-236D	2-47W435-283	2-63-236D	2	063	M	Pacific Scientific	PSA 1/2	1A	10%
2-SNUB-63-295		47A437-2-24	2-47W435-279	47A437-2-24	2	063	M	Pacific Scientific	PSA 1/4	1A	10%
2-SNUB-63-298		63-2SIS-R216	2-47W435-276	63-2SIS-R216	2	063	M	Pacific Scientific	PSA 10	1B	10%
2-SNUB-63-299		63-2SIS-R214	2-47W435-276	63-2SIS-R214	2	063	M	Pacific Scientific	PSA 10	1B	10%
2-SNUB-63-300		63-2SIS-R211	2-47W435-276	63-2SIS-R211	2	063	M	Pacific Scientific	PSA 10	1B	10%
2-SNUB-63-301		63-2SIS-R245	2-47W435-276	63-2SIS-R245	2	063	M	Pacific Scientific	PSA 3	1B	10%
2-SNUB-63-302		63-2SIS-R242	2-47W435-276	63-2SIS-R242	2	063	M	Pacific Scientific	PSA 10	1B	10%
2-SNUB-63-303N		63-2SIS-R240	2-47W435-276	63-2SIS-R240	2	063	M	Pacific Scientific	PSA 3	1B	10%
2-SNUB-63-303S		63-2SIS-R240	2-47W435-276	63-2SIS-R240	2	063	M	Pacific Scientific	PSA 3	1B	10%
2-SNUB-63-304		63-2SIS-R276	2-47W435-278	63-2SIS-R276	2	063	M	Pacific Scientific	PSA 1/4	1A	10%

Appendix F - Snubber Test Plan

Page 60 of 66

Component ID	Support ID	Mark No	ISO Dwg	Support Dwg	Class	Sys	Type	Mfg	Model	DTPG	Plan
2-SNUB-63-305		63-2SIS-R155	2-47W435-275	63-2SIS-R155	2	063	M	Pacific Scientific	PSA 10	1B	10%
2-SNUB-63-306N		63-2SIS-R142	2-47W435-275	63-2SIS-R142	2	063	M	Pacific Scientific	PSA 3	1B	10%
2-SNUB-63-306S		63-2SIS-R142	2-47W435-275	63-2SIS-R142	2	063	M	Pacific Scientific	PSA 3	1B	10%
2-SNUB-63-307		63-2SIS-R170	2-47W435-275	63-2SIS-R170	2	063	M	Pacific Scientific	PSA 3	1B	10%
2-SNUB-63-308B		47A432-1-08	2-47W435-275	47A432-1-08	2	063	M	Pacific Scientific	PSA 10	1B	10%
2-SNUB-63-308T		47A432-1-08	2-47W435-275	47A432-1-08	2	063	M	Pacific Scientific	PSA 10	1B	10%
2-SNUB-63-309		47A432-2-02	2-47W435-274	47A432-2-02	2	063	M	Pacific Scientific	PSA 10	1B	10%
2-SNUB-63-310		47A437-2-22	2-47W435-279	47A437-2-22	2	063	M	Pacific Scientific	PSA 1/4	1A	10%
2-SNUB-63-418N		63-2SIS-R168	2-47W435-275	63-2SIS-R168	2	063	M	Pacific Scientific	PSA 3	1B	10%
2-SNUB-63-418S		63-2SIS-R168	2-47W435-275	63-2SIS-R168	2	063	M	Pacific Scientific	PSA 3	1B	10%
2-SNUB-63-441		2-47A435-12-093	2-47W435-264A	2-47A435-12-093	1	063	M	Pacific Scientific	PSA 1/2	1A	10%
2-SNUB-63-444		2-47A435-16-76	2-47W435-265A	2-47A435-16-76	2	063	M	Pacific Scientific	PSA 1/4	1A	10%
2-SNUB-63-446		47A435-16-17	2-47W435-265A	47A435-16-17	2	063	M	Pacific Scientific	PSA 1/2	1A	10%
2-SNUB-63-468		2-47A437-1-62	2-47W435-275	2-47A437-1-62	2	063	M	Pacific Scientific	PSA 3	1B	10%
2-SNUB-63-480		47A435-03-008	2-47W435-277	47A435-03-008	2	063	M	Pacific Scientific	PSA 35	1C	10%
2-SNUB-63-481		2-47A437-2-4	2-47W435-276	2-47A437-2-4	2	063	M	Pacific Scientific	PSA 10	1B	10%
2-SNUB-63-484S		2-63-095U	2-47W435-267B	2-63-095U	2	063	M	Pacific Scientific	PSA 1/4	1A	10%

Appendix F - Snubber Test Plan

Page 61 of 66

Component ID	Support ID	Mark No	ISO Dwg	Support Dwg	Class	Sys	Type	Mfg	Model	DTPG	Plan
2-SNUB-63-488		2-47A435-14-107	2-47W435-267A	2-47A435-14-107	1	063	M	Pacific Scientific	PSA 1/2	1A	10%
2-SNUB-63-489		47A435-15-79	2-47W435-267B	47A435-15-79	2	063	M	Pacific Scientific	PSA 1/2	1A	10%
2-SNUB-63-490		47A435-15-97	2-47W435-267B	47A435-15-97	2	063	M	Pacific Scientific	PSA 10	1B	10%
2-SNUB-63-492		2-47A432-6-17	2-47W435-274	2-47A432-6-17	1	063	M	Pacific Scientific	PSA 3	1B	10%
2-SNUB-63-493B		2-47A435-03-018	2-47W435-277	2-47A435-03-018	2	063	M	Pacific Scientific	PSA 10	1B	10%
2-SNUB-63-493T		2-47A435-03-018	2-47W435-277	2-47A435-03-018	2	063	M	Pacific Scientific	PSA 10	1B	10%
2-SNUB-63-494		2-63-584	2-47W435-256	2-63-584	2	063	M	Pacific Scientific	PSA 1/4	1A	10%
2-SNUB-63-495		2-47A432-3-13	2-47W435-256	2-47A432-3-13	2	063	M	Pacific Scientific	PSA 3	1B	10%
2-SNUB-63-496		2-47A432-3-14	2-47W435-256	2-47A432-3-14	1	063	M	Pacific Scientific	PSA 3	1B	10%
2-SNUB-63-497		2-47A432-3-15	2-47W435-253	2-47A432-3-15	1	063	M	Pacific Scientific	PSA 3	1B	10%
2-SNUB-63-498		2-47A432-3-16	2-47W435-253	2-47A432-3-16	1	063	M	Pacific Scientific	PSA 10	1B	10%
2-SNUB-63-499		2-47A435-13-117	2-47W435-264A	2-47A435-13-117	1	063	M	Pacific Scientific	PSA 1/2	1A	10%
2-SNUB-63-500		2-47A435-13-118	2-47W435-264A	2-47A435-13-118	1	063	M	Pacific Scientific	PSA 1	1B	10%
2-SNUB-63-502		2-47A435-14-109	2-47W435-255	2-47A435-14-109	1	063	M	Pacific Scientific	PSA 1	1B	10%
2-SNUB-63-503		2-63-285	2-47W435-255	2-63-285	2	063	M	Pacific Scientific	PSA 1/4	1A	10%
2-SNUB-63-504		2-63-573	2-47W435-255	2-63-573	2	063	M	Pacific Scientific	PSA 1/4	1A	10%

Appendix F - Snubber Test Plan

Page 62 of 66

Component ID	Support ID	Mark No	ISO Dwg	Support Dwg	Class	Sys	Type	Mfg	Model	DTPG	Plan
2-SNUB-63-519		2-63-069	2-47W435-267	2-63-069	2	EL 740 AZ 215 R 48	M	Pacific Scientific	PSA 1	1B	10%
2-SNUB-63-521		2-63-571H	2-47W435-255	2-63-571H	2	063	M	Pacific Scientific	PSA 1/2	1A	10%
2-SNUB-68-311		2-68-030	2-47W465-206	2-68-030	1	068	M	Pacific Scientific	PSA 3	1B	10%
2-SNUB-68-313B		2-68-023	2-47W465-206	2-68-023	1	068	M	Pacific Scientific	PSA 1/2	1A	10%
2-SNUB-68-313T		2-68-023	2-47W465-206	2-68-023	1	068	M	Pacific Scientific	PSA 1/2	1A	10%
2-SNUB-68-314		2-68-024	2-47W465-206	2-68-024	1	068	M	Pacific Scientific	PSA 1	1B	10%
2-SNUB-68-315		2-68-021	2-47W465-206	2-68-021	1	068	M	Pacific Scientific	PSA 3	1B	10%
2-SNUB-68-316		2-68-020	2-47W465-206	2-68-020	1	068	M	Pacific Scientific	PSA 3	1B	10%
2-SNUB-68-317		2-68-031	2-47W465-206	2-68-031	1	068	M	Pacific Scientific	PSA 1	1B	10%
2-SNUB-68-318		2-68-032	2-47W465-206	2-68-032	1	068	M	Pacific Scientific	PSA 1/2	1A	10%
2-SNUB-68-319		2-68-033	2-47W465-206	2-68-033	1	068	M	Pacific Scientific	PSA 1	1B	10%
2-SNUB-68-320E		2-68-036	2-47W465-206	2-68-036	1	068	M	Pacific Scientific	PSA 1	1B	10%
2-SNUB-68-321		2-68-050	2-47W465-206	2-68-050	2	068	M	Pacific Scientific	PSA 1/4	1A	10%
2-SNUB-68-322		2-68-053	2-47W465-206	2-68-053	2	068	M	Pacific Scientific	PSA 1/4	1A	10%
2-SNUB-68-323		2-68-044	2-47W465-206	2-68-044	1	068	M	Pacific Scientific	PSA 1/2	1A	10%
2-SNUB-68-324		2-68-042	2-47W465-206	2-68-042	1	68	M	Pacific Scientific	PSA 1	1B	10%

Appendix F - Snubber Test Plan

Page 63 of 66

Component ID	Support ID	Mark No	ISO Dwg	Support Dwg	Class	Sys	Type	Mfg	Model	DTPG	Plan
2-SNUB-68-328		2-68-093	2-47W465-211	2-68-093	1	068	M	Pacific Scientific	PSA 10	1B	10%
2-SNUB-68-329		2-68-096	2-47W465-211	2-68-096	1	068	M	Pacific Scientific	PSA 3	1B	10%
2-SNUB-68-340N		2-68-415	2-47W465-211	2-68-415	1	068	M	Pacific Scientific	PSA 1	1B	10%
2-SNUB-68-340S		2-68-415	2-47W465-211	2-68-415	1	068	M	Pacific Scientific	PSA 1	1B	10%
2-SNUB-68-344		2-68-427	2-47W465-211	2-68-427	1	068	M	Pacific Scientific	PSA 3	1B	10%
2-SNUB-68-357		47A465-8-63	2-47W465-236	47A465-8-63	2	068	M	Pacific Scientific	PSA 1	1B	10%
2-SNUB-68-364		47A465-2-23	2-47W465-246	47A465-2-23	2	068	M	Pacific Scientific	PSA 3	1B	10%
2-SNUB-68-365		47A465-2-41	2-47W465-246	47A465-2-41	2	068	M	Pacific Scientific	PSA 1/2	1A	10%
2-SNUB-68-366		47A465-2-46	2-47W465-246	47A465-2-46	2	068	M	Pacific Scientific	PSA 1/4	1A	10%
2-SNUB-68-464N		2-68-412	2-47W465-211	2-68-412	1	068	M	Pacific Scientific	PSA 3	1B	10%
2-SNUB-68-464S		2-68-412	2-47W465-211	2-68-412	1	068	M	Pacific Scientific	PSA 3	1B	10%
2-SNUB-68-465		2-47A465-1-108	2-47W465-206	2-47A465-1-108	1	068	M	Pacific Scientific	PSA 3	1B	10%
2-SNUB-68-469		2-68-034	2-47W465-206	2-68-034	1	068	M	Pacific Scientific	PSA 1	1B	10%
2-SNUB-68-470		47A465-8-60	2-47W465-236	47A465-8-60	2	068	M	Pacific Scientific	PSA 1/4	1A	10%
2-SNUB-68-477		47A465-8-61	2-47W465-236	47A465-8-61	2	068	M	Pacific Scientific	PSA 1/4	1A	10%
2-SNUB-68-520E		47A465-4-7	2-47W465-246	47A465-4-7	2	068	M	Pacific Scientific	PSA 1/4	1A	10%
2-SNUB-68-520W		47A465-4-7	2-47W465-246	47A465-4-7	2	068	M	Pacific Scientific	PSA 1/4	1A	10%

Appendix F - Snubber Test Plan

Page 64 of 66

Component ID	Support ID	Mark No	ISO Dwg	Support Dwg	Class	Sys	Type	Mfg	Model	DTPG	Plan
2-SNUB-72-372		72-2CS-R112	2-47W437-204A	72-2CS-R112	2	072	M	Pacific Scientific	PSA 10	1B	10%
2-SNUB-72-373		72-2CS-R054	2-47W437-207	72-2CS-R054	2	072	M	Pacific Scientific	PSA 1/2	1A	10%
2-SNUB-72-374		72-2CS-R149	2-47W437-206	72-2CS-R149	2	072	M	Pacific Scientific	PSA 3	1B	10%
2-SNUB-72-375		72-2CS-R119	2-47W437-204B	72-2CS-R119	2	072	M	Pacific Scientific	PSA 35	1C	10%
2-SNUB-72-376		72-2CS-R009	2-47W437-206A	72-2CS-R009	2	072	M	Pacific Scientific	PSA 3	1B	10%
2-SNUB-72-516		2-47A437-2-36	2-47W437-205	2-47A437-2-36	2	072	M	Pacific Scientific	PSA 3	1B	10%
2-SNUB-72-517		2-47A437-11-1H	2-47W437-206A	2-47A437-11-1H	2	072	M	Pacific Scientific	PSA 3	1B	10%
2-SNUB-72-518		2-47A437-1-63	2-47W437-206	2-47A437-1-63	2	072	M	Pacific Scientific	PSA 3	1B	10%
2-SNUB-74-378		2-74-008	2-47W432-216	2-74-008	1	074	M	Pacific Scientific	PSA 10	1B	10%
2-SNUB-74-379		2-74-011	2-47W432-216	2-74-011	1	074	M	Pacific Scientific	PSA 10	1B	10%
2-SNUB-74-380		2-74-015	2-47W432-216	2-74-015	1	074	M	Pacific Scientific	PSA 1/4	1A	10%
2-SNUB-74-381		2-74-017	2-47W432-216	2-74-017	1	074	M	Pacific Scientific	PSA 1/2	1A	10%
2-SNUB-74-382		47A432-3-04	2-47W432-216	47A432-3-04	1	074	M	Pacific Scientific	PSA 10	1B	10%
2-SNUB-74-383		74-2RHR-R096	2-47W432-209	74-2RHR-R096	2	074	M	Pacific Scientific	PSA 3	1B	10%
2-SNUB-74-384		74-2RHR-R037	2-47W432-209	74-2RHR-R037	2	074	M	Pacific Scientific	PSA 3	1B	10%
2-SNUB-74-385E		74-2RHR-R003	2-47W432-208	74-2RHR-R003	2	074	M	Pacific Scientific	PSA 1	1B	10%
2-SNUB-74-385W		74-2RHR-R003	2-47W432-208	74-2RHR-R003	2	074	M	Pacific Scientific	PSA 1	1B	10%

Appendix F - Snubber Test Plan

Page 65 of 66

Component ID	Support ID	Mark No	ISO Dwg	Support Dwg	Class	Sys	Type	Mfg	Model	DTPG	Plan
2-SNUB-74-386E		74-2RHR-R006	2-47W432-208	74-2RHR-R006	2	074	M	Pacific Scientific	PSA 1	1B	10%
2-SNUB-74-386W		74-2RHR-R006	2-47W432-208	74-2RHR-R006	2	074	M	Pacific Scientific	PSA 1	1B	10%
2-SNUB-74-387N		74-2RHR-R014	2-47W432-208	74-2RHR-R014	2	074	M	Pacific Scientific	PSA 1/2	1A	10%
2-SNUB-74-387S		74-2RHR-R014	2-47W432-208	74-2RHR-R014	2	074	M	Pacific Scientific	PSA 1/2	1A	10%
2-SNUB-74-388		74-2RHR-R058	2-47W432-209	74-2RHR-R058	2	074	M	Pacific Scientific	PSA 1	1B	10%
2-SNUB-74-389		74-2RHR-R028	2-47W432-208	74-2RHR-R028	2	074	M	Pacific Scientific	PSA 10	1B	10%
2-SNUB-74-390		74-2RHR-R216	2-47W432-211	74-2RHR-R216	2	074	M	Pacific Scientific	PSA 1	1B	10%
2-SNUB-74-391		74-2RHR-R220	2-47W432-211	74-2RHR-R220	2	074	M	Pacific Scientific	PSA 10	1B	10%
2-SNUB-74-392		74-2RHR-R230	2-47W432-211	74-2RHR-R230	2	074	M	Pacific Scientific	PSA 1	1B	10%
2-SNUB-74-393		74-2RHR-R232	2-47W432-211	74-2RHR-R232	2	074	M	Pacific Scientific	PSA 3	1B	10%
2-SNUB-74-394		47A435-2-25	2-47W432-214	47A435-2-25	2	074	M	Pacific Scientific	PSA 1	1B	10%
2-SNUB-74-396N		74-2RHR-R155	2-47W432-205	74-2RHR-R155	2	074	M	Pacific Scientific	PSA 3	1B	10%
2-SNUB-74-396S		74-2RHR-R155	2-47W432-205	74-2RHR-R155	2	074	M	Pacific Scientific	PSA 3	1B	10%
2-SNUB-74-398		63-2SIS-R192	2-47W432-210	63-2SIS-R192	2	074	M	Pacific Scientific	PSA 1/2	1A	10%
2-SNUB-74-399		63-2SIS-R194	2-47W432-210	63-2SIS-R194	2	074	M	Pacific Scientific	PSA 1/4	1A	10%
2-SNUB-74-400		63-2SIS-R195	2-47W432-210	63-2SIS-R195	2	074	M	Pacific Scientific	PSA 1/4	1A	10%
2-SNUB-74-401		47A406-3-19	2-47W432-210	47A406-3-19	2	074	M	Pacific Scientific	PSA 1/4	1A	10%

Appendix F - Snubber Test Plan

Component ID	Support ID	Mark No	ISO Dwg	Support Dwg	Class	Sys	Type	Mfg	Model	DTPG	Plan
2-SNUB-74-402B		47A432-1-19	2-47W432-210	47A432-1-19	2	074	M	Pacific Scientific	PSA 1	1B	10%
2-SNUB-74-402T		47A432-1-19	2-47W432-210	47A432-1-19	2	074	M	Pacific Scientific	PSA 1	1B	10%
2-SNUB-74-403		74-2RHR-R174	2-47W432-210	74-2RHR-R174	2	074	M	Pacific Scientific	PSA 1	1B	10%
2-SNUB-74-404		74-2RHR-R185	2-47W432-210	74-2RHR-R185	2	074	M	Pacific Scientific	PSA 1	1B	10%
2-SNUB-74-405		74-2RHR-R197	2-47W432-210	74-2RHR-R197	2	074	M	Pacific Scientific	PSA 1	1B	10%
2-SNUB-74-485		2-47A435-2-28	2-47W432-214	2-47A435-2-28	2	074	M	Pacific Scientific	PSA 3	1B	10%
2-SNUB-74-486		2-47A435-1-5	2-47W432-214	2-47A435-1-5	2	074	M	Pacific Scientific	PSA 3	1B	10%
2-SNUB-74-501		2-74-010	2-47W432-216	2-74-010	1	074	M	Pacific Scientific	PSA 3	1B	10%
2-SNUB-90-532N		47A600-105-36	2-47W600-407	47A600-105-36	2	090	M	Pacific Scientific	PSA 1/2	1A	10%
2-SNUB-90-532S		47A600-105-36	2-47W600-407	47A600-105-36	2	090	M	Pacific Scientific	PSA 1/2	1A	10%
2-SNUB-90-533N		47A600-105-37	2-47W600-407	47A600-105-37	2	090	M	Pacific Scientific	PSA 1/2	1A	10%
2-SNUB-90-533S		47A600-105-37	2-47W600-407	47A600-105-37	2	090	M	Pacific Scientific	PSA 1/2	1A	10%
2-SNUB-90-534N		47A600-105-35	2-47W600-406	47A600-105-35	2	090	M	Pacific Scientific	PSA 1/2	1A	10%
2-SNUB-90-534S		47A600-105-35	2-47W600-406	47A600-105-35	2	090	M	Pacific Scientific	PSA 1/2	1A	10%

IST-RR-6*
(WBN-2/PSI-4)
Steam Generator Snubber Preservice Leak Inspections

Proposed Alternative in Accordance with 10 CFR 50.55a(z)(1)
Acceptable Level of Quality and Safety

ASME Code Component(s) Affected

Snubber ID	Description	Type	Manufacturer	Model
2-SNUB-001-2SG1A	Steam Generator # 1 Snubber A	Hydraulic	Curtiss Wright/PMH	PD14860
2-SNUB-001-2SG1B	Steam Generator # 1 Snubber B	Hydraulic	Curtiss Wright/PMH	PD14860
2-SNUB-001-2SG1C	Steam Generator # 1 Snubber C	Hydraulic	Curtiss Wright/PMH	PD14860
2-SNUB-001-2SG1D	Steam Generator # 1 Snubber D	Hydraulic	Curtiss Wright/PMH	PD14860
2-SNUB-001-2SG1E	Steam Generator # 1 Snubber E	Hydraulic	Curtiss Wright/PMH	PD14860
2-SNUB-001-2SG2A	Steam Generator # 2 Snubber A	Hydraulic	Curtiss Wright/PMH	PD14860
2-SNUB-001-2SG2B	Steam Generator # 2 Snubber B	Hydraulic	Curtiss Wright/PMH	PD14860
2-SNUB-001-2SG2C	Steam Generator # 2 Snubber C	Hydraulic	Curtiss Wright/PMH	PD14860
2-SNUB-001-2SG2D	Steam Generator # 2 Snubber D	Hydraulic	Curtiss Wright/PMH	PD14860
2-SNUB-001-2SG2E	Steam Generator # 2 Snubber E	Hydraulic	Curtiss Wright/PMH	PD14860
2-SNUB-001-2SG3A	Steam Generator # 3 Snubber A	Hydraulic	Curtiss Wright/PMH	PD14860
2-SNUB-001-2SG3B	Steam Generator # 3 Snubber B	Hydraulic	Curtiss Wright/PMH	PD14860
2-SNUB-001-2SG3C	Steam Generator # 3 Snubber C	Hydraulic	Curtiss Wright/PMH	PD14860
2-SNUB-001-2SG3D	Steam Generator # 3 Snubber D	Hydraulic	Curtiss Wright/PMH	PD14860
2-SNUB-001-2SG3E	Steam Generator # 3 Snubber E	Hydraulic	Curtiss Wright/PMH	PD14860
2-SNUB-001-2SG4A	Steam Generator # 4 Snubber A	Hydraulic	Curtiss Wright/PMH	PD14860
2-SNUB-001-2SG4B	Steam Generator # 4 Snubber B	Hydraulic	Curtiss Wright/PMH	PD14860
2-SNUB-001-2SG4C	Steam Generator # 4 Snubber C	Hydraulic	Curtiss Wright/PMH	PD14860
2-SNUB-001-2SG4D	Steam Generator # 4 Snubber D	Hydraulic	Curtiss Wright/PMH	PD14860
2-SNUB-001-2SG4E	Steam Generator # 4 Snubber E	Hydraulic	Curtiss Wright/PMH	PD14860

* This Relief Request was submitted and approved by NRC with the designation WBN-2/PSI. This was because snubbers were under the scope of the PSI program during the preservice timeframe. The designation IST-RR-6 has been added in this document in order to simplify tracking due to the fact that snubbers transitioned to the IST program after U2 achieved commercial operation.

Applicable Code Edition and Addenda

ASME OM Code, 2001 Edition through 2003 Addenda

IST-RR-6
(WBN-2/PSI-4)
Steam Generator Snubber Preservice Leak Inspections

Applicable Code Requirement

Subsection ISTD, Paragraph ISTD-4110(d) Preservice Examination Requirements "if applicable, fluid is at the recommended level, and fluid is not leaking from the snubber system."

Reason for Request

The Tennessee Valley Authority (TVA) is requesting relief from the preservice examination requirement of ISTD-4110(d) to verify fluid is at the recommended level, and fluid is not leaking from the snubber system for the Watts Bar Nuclear Plant (WBN) Unit 2, Steam Generator (SG) snubbers.

Preservice examination of the 20 SG snubbers identified evidence of leakage on five of the snubbers (i.e., 2-SNUB-001-2SG1B, -2SG1D, -2SG1E, -2SG4A, -2SG4C). TVA performed troubleshooting of these five snubbers with onsite vendor support over the period of several weeks. The initial troubleshooting focused on locating the source of the leakage and performing any repairs that are feasible on installed snubbers (e.g., tightening fittings). These efforts were successful at eliminating leakage on snubbers 2-SNUB-001-2SG1B and -2SG4A. However, three snubbers continue to exhibit minor leakage. Further troubleshooting of the three snubbers (i.e., 2-SNUB-001-2SG1D, -2SG1E, -2SG4C) included wiping off the leakage, subsequent re-examination of the snubbers, and monitoring of the associated hydraulic reservoir levels. TVA has determined that any leakage present is minor. For example, the worst-case snubber exhibits approximately 10 drops per day or less. Snubber 2-SNUB-001-2SG1D is leaking from the mechanical fitting (compression) between the control valve and the tee as well as the mechanical joint (Inconel® Alloy 600 O-ring) between the control valve and the snubber tube. Snubber 2-SNUB-001-2SG1E is leaking from the internal seal plug and 321 stainless steel O-ring. Snubber 2-SNUB-001-2SG4C is leaking from the Tefzel® head and piston seal. See Figure 1 for a diagram depicting the leak locations on these three snubbers (i.e., 2-SNUB-001-2SG1D, -2SG1E, -2SG4C). The vendor has determined the type of leakage exhibited by these three WBN Unit 2 SG snubbers is not abnormal under the current plant conditions (cold) and the snubber seal design is such that the sealing characteristics should improve as the plant transitions into normal operating conditions.

IST-RR-6
(WBN-2/PSI-4)
Steam Generator Snubber Preservice Leak Inspections

Reason for Request (continued)

The term "not leaking" as used in ISTD-4110(d) is not defined in Subsection ISTD, and TVA has not identified any OM Code interpretations related to this requirement. As such, even the minor leakage identified on the five SG snubbers may not meet the requirements of ISTD-4110(d) which would require corrective actions be taken in accordance with ISTD-4140 (e.g., repair or replace). Considering the minor nature of the leakage, TVA believes it is not prudent to expend the significant resources necessary to remove, refurbish, reinstall, and reexamine these large snubbers. Furthermore, there is a risk of damaging adjacent snubbers during removal and/or reinstallation of the affected snubbers.

Proposed Alternative and Basis for Use

TVA is requesting that the inservice examination requirements of the OM Code, Section ISTD-4233 for fluid level be applied in lieu of the preservice examination requirements of OM Code, Section ISTD-4110(d) during the preservice period. The proposed alternative is the same requirement that operating plants are obligated to implement for inservice examination of installed snubbers. The inservice examination requirements require verification of adequate reservoir level and do not include a "not leaking" criterion. Therefore, some leakage on installed snubbers, as long as reservoir levels are maintained, is considered an acceptable level of safety and quality.
WBN Unit 2 utilizes 20 total, 12-inch bore, Curtiss Wright/Paul Munroe Hydraulics (PMH) snubbers for dynamic restraint of the SGs. Five snubbers are installed on each SG and work together to support the SG during a seismic event. The snubbers are located inside the SG enclosures in an area where there are no permanent platforms and radiological conditions limit personnel access during normal power operation. The four snubber fluid reservoirs are located in upper containment on the outside of the SG enclosures and are accessible during normal power operations. See Figure 2, Steam Generator Snubber Locations, for general arrangement of the snubbers and reservoirs.

IST-RR-6
(WBN-2/PSI-4)
Steam Generator Snubber Preservice Leak Inspections

Proposed Alternative and Basis for Use (continued)

In the early 1980s, TVA identified potentially defective Tefzel® head and piston seals installed in the WBN Unit 2 SG snubbers. The WBN Unit 2 SG snubbers were returned to the vendor and the defective seals were corrected. As part of WBN Unit 2 construction, the snubbers were again returned to the vendor in 2009 for testing and repair, as necessary. In December 2013, prior to installation, all 20 snubbers passed a seal integrity test by the vendor at WBN. The snubbers were installed in their as-designed location in April 2014 and the four reservoirs subsequently filled to the recommended level. In October 2014, the tubing from the snubbers to the reservoirs was re-worked, which required the four reservoirs to be drained and refilled to the recommended level. The documentation associated with this activity does not specify the levels at which the reservoirs are to be filled. The installation procedure simply stated to fill within the recommended level, which is between the MIN cold and MAX cold marks on the reservoir site glass. It should be noted that the site glass for the reservoirs does not have graduated marking between the MIN cold and MAX cold marks.
From mid June 2015 to early August 2015, WBN Unit 2 underwent hot functional testing (HFT). Thermal movement examinations were performed on all 20 SG snubbers during HFT, with no issues identified. On August 18, 2015, the initial visual examinations were performed. Five snubbers (2-SNUB-001-2SG1B, -2SG1D, -2SG1E, -2SG4A, -2SG4C) were noted as having evidence of leakage and the SG #1 and SG #4 reservoirs were below the MIN cold level. These examination deficiencies were entered into the TVA corrective action program (CAP). The SG #2 and SG #3 reservoirs were found at the recommended level during the August 2015 examination. As a corrective action to the deficiencies noted during the August 2015 visual examinations, the SG #1 and SG #4 reservoirs were refilled to the recommended level on December 16, 2015. No specific level is documented for the December 2015 fill, but the vendor confirmed that the reservoirs were filled to the approximate mid-point between the MIN and MAX cold marks. The reservoir levels were checked again on January 5, 2016 and February 23, 2016. No discernable drop in reservoir level was noted during that period. Reservoir fluid levels were filled to the maximum cold level on February 27, 2016 to provide margin with respect to fluid leakage.

IST-RR-6
(WBN-2/PSI-4)
Steam Generator Snubber Preservice Leak Inspections

Proposed Alternative and Basis for Use (continued)

TVA performed troubleshooting of the five snubbers that initially exhibited leakage, with onsite vendor support. The initial troubleshooting focused on locating the source of the leakage and performing any repairs that were feasible on installed snubbers (e.g., tightening fittings). These efforts were successful at eliminating leakage on snubbers 2-SNUB-001-2SG1B and -2SG4A. However, three snubbers continue to exhibit minor leakage.

Once it was determined that the remaining leaks could not be completely eliminated using available materials and repair methods feasible for installed snubbers, the condition was entered into the TVA CAP to document operability for the snubbers experiencing leakage. During normal operation, the pressure in the snubber is low and due only to the head of the fluid in the reservoir. During a dynamic (i.e., seismic) event, the snubber would lock up and the pressure inside the snubber up to the control valve would increase substantially. The tubing and reservoirs upstream of the snubber control valves would remain at the lower pressure. For the leak on 2-SNUB-001-2SG4C, the Tefzel® seal is designed to withstand the high pressure within the snubber during a dynamic event and its sealing capability increases at higher pressure as the pressure forces the seal's lips against the metallic seating surface. Therefore, any leakage during normal operation would be reduced or eliminated during a dynamic event. For the seal plug leakage on 2-SNUB-001-2SG1E and the control valve to tube leakage on 2-SNUB-001-2SG1D, the snubber vendor determined that the leakage that would be experienced during a seismic event would be a small amount compared to the 0.8 gallons of fluid between the MIN and MAX marks and the 2.4 gallons of fluid below the MIN mark. The control valve to tee fitting leak on 2-SNUB-001-2SG1D is on the low pressure side of the control valve and therefore would not increase during a dynamic event. Therefore, the leaking snubbers will perform their safety function under design basis conditions as long as they are filled with fluid. As such, the operability of the snubbers is maintained.

TVA will periodically monitor the fluid level of the four SG snubber reservoirs during WBN Unit 2 operation until the first refueling outage that is currently scheduled to begin on October 2017. The initial monitoring frequency is monthly. However, the periodicity of the reservoir fluid level monitoring may be adjusted based on the trend of level change observed in the reservoirs. For example, if an increase in rate of fluid level change is detected, then the monitoring frequency will be shortened as appropriate to ensure there is adequate time to refill the reservoir before it reaches the minimum level.

IST-RR-6
(WBN-2/PSI-4)
Steam Generator Snubber Preservice Leak Inspections

Proposed Alternative and Basis for Use (continued)

If reservoir fluid level cannot be maintained above the required minimum level, then the associated snubbers will be identified as unacceptable and the requirements of ISTD-4270, "Inservice Examination Failure Evaluation," and ISTD-4280, "Inservice Examination Corrective Action," will be applied. In addition, any time the reservoir level is observed to be less than the required minimum level, the condition will be entered into the TVA CAP for operability determination and corrective action.
During the inservice period, snubbers are in the scope of the Inservice Testing Program developed to meet the requirements of OM Code 2004 Edition through 2006 Addenda. TVA will perform the inservice examinations and tests of Subsection ISTD, as required, during the first scheduled refueling outage. This includes visual examination of all 20 SG snubbers in accordance with ISTD-4251.
As a contingency, TVA is exploring the option of procuring additional snubber(s) to be available for replacement during the first Unit 2 refueling outage, if required.
Based on the information provided above, the proposed alternative provides an acceptable level of quality and safety and provides reasonable assurance of the operational readiness of the WBN, Unit 2 SG snubbers.

Duration of Proposed Alternative

This request is for the duration of the WBN, Unit 2 Preservice Test period.

Precedents

TVA has not identified any precedents for a similar relief request.

References

None

Status

This Relief Request has been authorized. See Reference 2.AS.

IST-RR-6
(WBN-2/PSI-4)
Steam Generator Snubber Preservice Leak Inspections

Figure 1 - SG Snubber Leak Locations

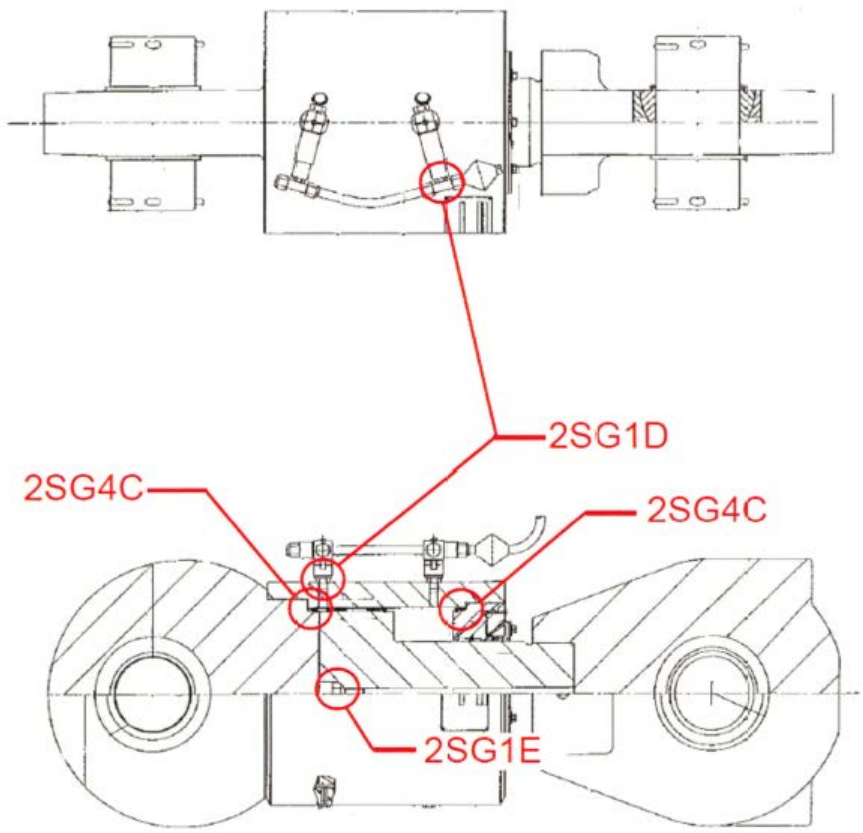

Figure 1 Notes:

1. The circled locations indicate approximate leak locations for the referenced snubber. The snubber IDs are prefixed by 2-SNUB-001-

IST-RR-6
(WBN-2/PSI-4)
Steam Generator Snubber Preservice Leak Inspections

Figure 2 - Steam Generator Snubber Location/Configuration

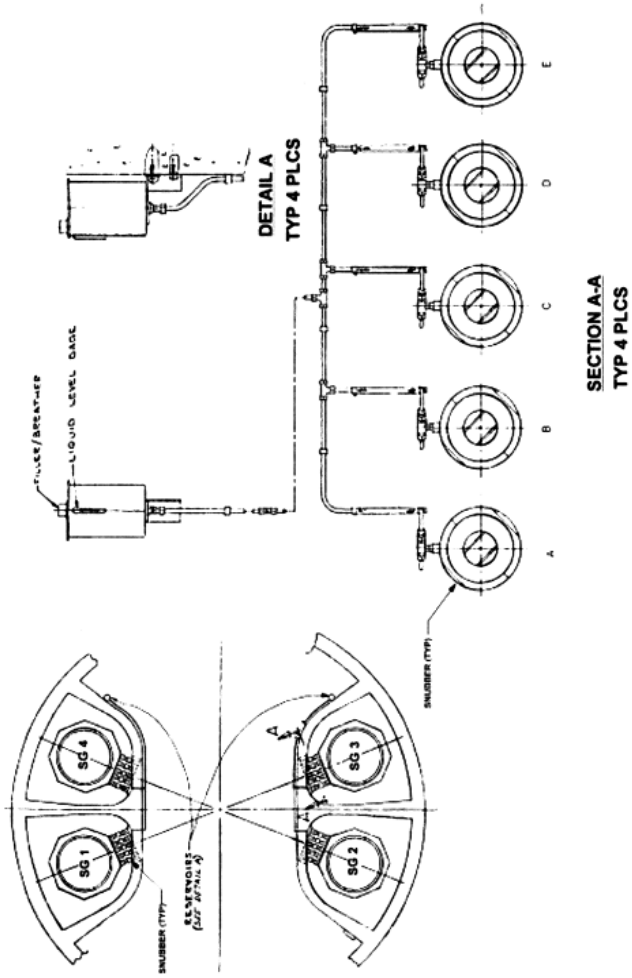

Appendix H - Pumps Exempt from the IST Program

Flow Diagram: 0-47W809-3

PUMP ID	EXEMPTION BASIS	PUMP ID	EXEMPTION BASIS	PUMP ID	EXEMPTION BASIS
0-PMP-62-148	ISTA-1100	0-PMP-62-155	ISTA-1100	1-PMP-62-153	ISTA-1100
				2-PMP-62-153	ISTA-1100

Flow Diagram: 0-47W832-2

PUMP ID	EXEMPTION BASIS	PUMP ID	EXEMPTION BASIS	PUMP ID	EXEMPTION BASIS
0-PMP-26-9	ISTA-1100	0-PMP-26-1	ISTA-1100	0-PMP-26-4	ISTA-1100
				0-PMP-26-11	ISTA-1100

Flow Diagram: 0-47W840-1

PUMP ID	EXEMPTION BASIS	PUMP ID	EXEMPTION BASIS	PUMP ID	EXEMPTION BASIS
1-PMP-18-29/1-A	ISTB1200(c)	1-PMP-18-55/1-A	ISTB1200(c)	1-PMP-18-65/1	ISTB1200(c)
1-PMP-18-59/1-A	ISTB1200(c)	1-PMP-18-54/1-A	ISTB1200(c)	1-PMP-18-80/1	ISTB1200(c)

Flow Diagram: 0-47W840-1A

PUMP ID	EXEMPTION BASIS	PUMP ID	EXEMPTION BASIS	PUMP ID	EXEMPTION BASIS
2-PMP-18-59/3-A	ISTB1200(c)	2-PMP-18-55/3-A	ISTB1200(c)	1-PMP-18-65/2	ISTB1200(c)
2-PMP-18-29/3-A	ISTB1200(c)	2-PMP-18-54/3-A	ISTB1200(c)	2-PMP-18-65/3	ISTB1200(c)
1-PMP-18-29/2-B	ISTB1200(c)	1-PMP-18-54/2-B	ISTB1200(c)	1-PMP-18-80/2	ISTB1200(c)
1-PMP-18-59/2-B	ISTB1200(c)	1-PMP-18-55/2-B	ISTB1200(c)	2-PMP-18-80/3	ISTB1200(c)

Flow Diagram: 0-47W840-1B

PUMP ID	EXEMPTION BASIS	PUMP ID	EXEMPTION BASIS	PUMP ID	EXEMPTION BASIS
2-PMP-18-29/4-B	ISTB1200(c)	2-PMP-18-54/4-B	ISTB1200(c)	2-PMP-18-65/4	ISTB1200(c)
2-PMP-18-59/4-B	ISTB1200(c)	2-PMP-18-55/4-B	ISTB1200(c)	2-PMP-18-80/4	ISTB1200(c)

Flow Diagram: 0-47W855-1

PUMP ID	EXEMPTION BASIS	PUMP ID	EXEMPTION BASIS	PUMP ID	EXEMPTION BASIS
0-PMP-78-35-S	ISTA-1100	0-PMP-78-9-B	ISTA-1100	0-PMP-78-12-A	ISTA-1100

Flow Diagram: 1-47W813-1

PUMP ID	EXEMPTION BASIS	PUMP ID	EXEMPTION BASIS	PUMP ID	EXEMPTION BASIS
1-PMP-68-8	ISTA-1100	1-PMP-68-31	ISTA-1100	1-PMP-68-50	ISTA-1100
				1-PMP-68-73	ISTA-1100

Appendix H - Pumps Exempt from the IST Program

Flow Diagram: 1-47W859-2

PUMP ID	EXEMPTION BASIS	PUMP ID	EXEMPTION BASIS
1-PMP-70-130	ISTA-1100	1-PMP-70-131	ISTA-1100

Flow Diagram: 1-47W880-1

PUMP ID	EXEMPTION BASIS	PUMP ID	EXEMPTION BASIS	PUMP ID	EXEMPTION BASIS
1-PMP-82-A1/MOP	ISTB1200(c)	1-PMP-82-AOPA2-A	ISTB1200(c)	1-PMP-82-DOPA2-A	ISTB1200(c)
1-PMP-82-A1/POP	ISTB1200(c)	1-PMP-82-AOPA1-A	ISTB1200(c)	1-PMP-82-DOPA1-A	ISTB1200(c)
1-PMP-82-A2/MOP	ISTB1200(c)	1-PMP-82-A1/SOP	ISTB1200(c)	1-PMP-82-A1-A	ISTC-1200(b)
1-PMP-82-A2/POP	ISTB1200(c)	1-PMP-82-A2/SOP	ISTB1200(c)	1-PMP-82-A2-A	ISTC-1200(b)

Flow Diagram: 1-47W880-2

PUMP ID	EXEMPTION BASIS	PUMP ID	EXEMPTION BASIS	PUMP ID	EXEMPTION BASIS
1-PMP-82-B1/MOP	ISTB1200(c)	1-PMP-82-AOPB1-B	ISTB1200(c)	1-PMP-82-DOPB2-B	ISTB1200(c)
1-PMP-82-B1/POP	ISTB1200(c)	1-PMP-82-AOPB2-B	ISTB1200(c)	1-PMP-82-DOPB1-B	ISTB1200(c)
1-PMP-82-B2/MOP	ISTB1200(c)	1-PMP-82-B1/SOP	ISTB1200(c)	1-PMP-82-B2-B	ISTC-1200(b)
1-PMP-82-B2/POP	ISTB1200(c)	1-PMP-82-B2/SOP	ISTB1200(c)	1-PMP-82-B1-B	ISTC-1200(b)

Flow Diagram: 1-47W881-1

PUMP ID	EXEMPTION BASIS	PUMP ID	EXEMPTION BASIS	PUMP ID	EXEMPTION BASIS
1-PMP-82-A1A-A	ISTB1200(c)	1-PMP-82-A2A-A	ISTB1200(c)	1-PMP-82-A1B-A	ISTB1200(c)
				1-PMP-82-A2B-A	ISTB1200(c)

Flow Diagram: 1-47W881-2

PUMP ID	EXEMPTION BASIS	PUMP ID	EXEMPTION BASIS	PUMP ID	EXEMPTION BASIS
1-PMP-82-B2B-B	ISTB1200(c)	1-PMP-82-B1A-B	ISTB1200(c)	1-PMP-82-B2A-B	ISTB1200(c)
				1-PMP-82-B1B-B	ISTB1200(c)

Flow Diagram: 2-47W813-1

PUMP ID	EXEMPTION BASIS	PUMP ID	EXEMPTION BASIS	PUMP ID	EXEMPTION BASIS
2-PMP-68-8	ISTA-1100	2-PMP-68-31	ISTA-1100	2-PMP-68-50	ISTA-1100
				2-PMP-68-73	ISTA-1100

Flow Diagram: 2-47W859-3

PUMP ID	EXEMPTION BASIS	PUMP ID	EXEMPTION BASIS
2-PMP-70-130	ISTA-1100	2-PMP-70-131	ISTA-1100

Appendix H - Pumps Exempt from the IST Program

Flow Diagram: 2-47W880-3

PUMP ID	EXEMPTION BASIS	PUMP ID	EXEMPTION BASIS	PUMP ID	EXEMPTION BASIS
2-PMP-82/A1/MOP	ISTB1200(c)	2-PMP-82/AOPA1-A	ISTB1200(c)	2-PMP-82/DOPA2-A	ISTB1200(c)
2-PMP-82-A1/POP	ISTB1200(c)	2-PMP-82/AOPA2-A	ISTB1200(c)	2-PMP-82/DOPA1-A	ISTB1200(c)
2-PMP-82/A2/MOP	ISTB1200(c)	2-PMP-82/A1/SOP	ISTB1200(c)	2-PMP-82/A2-A	ISTC-1200(b)
2-PMP-82-A2/POP	ISTB1200(c)	2-PMP-82/A2/SOP	ISTB1200(c)	2-PMP-82/A1-A	ISTC-1200(b)

Flow Diagram: 2-47W880-4

PUMP ID	EXEMPTION BASIS	PUMP ID	EXEMPTION BASIS	PUMP ID	EXEMPTION BASIS
2-PMP-82/B1/MOP	ISTB1200(c)	2-PMP-82/AOPB1-B	ISTB1200(c)	2-PMP-82/DOPB1-B	ISTB1200(c)
2-PMP-82-B1/POP	ISTB1200(c)	2-PMP-82/AOPB2-B	ISTB1200(c)	2-PMP-82/DOPB2-B	ISTB1200(c)
2-PMP-82-B2/MOP	ISTB1200(c)	2-PMP-82/B1/SOP	ISTB1200(c)	2-PMP-82/B2-B	ISTC-1200(b)
2-PMP-82-B2/POP	ISTB1200(c)	2-PMP-82/B2/SOP	ISTB1200(c)	2-PMP-82/B1-B	ISTC-1200(b)

Flow Diagram: 2-47W881-3

PUMP ID	EXEMPTION BASIS	PUMP ID	EXEMPTION BASIS	PUMP ID	EXEMPTION BASIS
2-PMP-82-A1B-A	ISTB1200(c)	2-PMP-82-A2B-A	ISTB1200(c)	2-PMP-82-A1A-A	ISTB1200(c)
				2-PMP-82-A2A-A	ISTB1200(c)

Flow Diagram: 2-47W881-4

PUMP ID	EXEMPTION BASIS	PUMP ID	EXEMPTION BASIS	PUMP ID	EXEMPTION BASIS
2-PMP-82-B1A-B	ISTB1200(c)	2-PMP-82-B2A-B	ISTB1200(c)	2-PMP-82-B1B-B	ISTB1200(c)
				2-PMP-82-B2B-B	ISTB1200(c)

Appendix I - Valves Exempt from the IST Program

Flow Diagram: 0-47W625-12

VALVE ID	EXEMPTION BASIS	VALVE ID	EXEMPTION BASIS	VALVE ID	EXEMPTION BASIS
0-CKV-43-790	ISTA-1100	0-SMV-43-794	ISTA-1100	0-SMV-43-792	ISTA-1100
0-CKV-43-791	ISTA-1100	0-SMV-43-796	ISTA-1100	0-SMV-43-793	ISTA-1100
				0-SMV-43-795	ISTA-1100

Flow Diagram: 0-47W625-24

VALVE ID	EXEMPTION BASIS	VALVE ID	EXEMPTION BASIS	VALVE ID	EXEMPTION BASIS
2-SMV-43-1264	ISTC-1200(a)	1-SMV-43-1257	ISTC-1200(a)	1-SMV-43-1254	ISTC-1200(a)
1-SMV-43-1272	ISTC-1200(a)	2-SMV-43-1260	ISTC-1200(a)	1-SMV-43-1260	ISTC-1200(a)
1-SMV-43-1275	ISTC-1200(a)	2-SMV-43-1272	ISTC-1200(a)	1-SMV-43-1264	ISTC-1200(a)
				2-SMV-43-1275	ISTC-1200(a)

Flow Diagram: 0-47W625-25

VALVE ID	EXEMPTION BASIS	VALVE ID	EXEMPTION BASIS	VALVE ID	EXEMPTION BASIS
0-CKV-43-771	ISTA-1100	0-CKV-43-772	ISTA-1100	0-ISV-43-773	ISTA-1100
		0-ISV-43-774	ISTA-1100	0-ISV-43-777	ISTA-1100

Flow Diagram: 0-47W625-4

VALVE ID	EXEMPTION BASIS	VALVE ID	EXEMPTION BASIS	VALVE ID	EXEMPTION BASIS
0-SMV-43-718	ISTC-1200(a)	2-SMV-43-718	ISTC-1200(a)	1-SMV-43-718	ISTC-1200(a)
0-SMV-43-719	ISTC-1200(a)	2-SMV-43-719	ISTC-1200(a)	1-SMV-43-719	ISTC-1200(a)
		2-SMV-43-720	ISTC-1200(a)	1-SMV-43-720	ISTC-1200(a)

Appendix I - Valves Exempt from the IST Program

Flow Diagram: 0-47W625-8

VALVE ID	EXEMPTION BASIS	VALVE ID	EXEMPTION BASIS	VALVE ID	EXEMPTION BASIS
0-ISV-43-233	ISTC - 1200(c)	0-PCV-43-40	ISTA-1100	1-PCV-43-42	ISTA-1100
0-ISV-43-235	ISTC - 1200(c)	0-FCV-43-40A	ISTA-1100	1-FCV-43-42B	ISTA-1100
1-SMV-68-762	ISTA-1100	0-FCV-43-40B	ISTA-1100	2-FCV-43-43	ISTA-1100
2-SMV-68-762	ISTA-1100	2-FCV-43-41	ISTA-1100	1-PCV-43-43	ISTA-1100
1-TV-68-763	ISTA-1100	1-FCV-43-41	ISTA-1100	1-PCV-43-44	ISTA-1100
2-TV-68-763	ISTC - 1200(a)	2-PCV-43-42	ISTC - 1200(a)	2-FCV-43-44A	ISTA-1100
1-TV-43-764	ISTC - 1200(a)	1-FCV-43-43	ISTA-1100	1-PCV-43-45	ISTA-1100
2-TV-43-764	ISTC - 1200(a)	2-PCV-43-43	ISTC - 1200(a)	2-PCV-43-45	ISTA-1100
1-SMV-43-765	ISTC - 1200(c)	1-FCV-43-44A	ISTA-1100	1-FCV-43-45B	ISTA-1100
2-SMV-43-765	ISTC - 1200(c)	1-FCV-43-44B	ISTA-1100	2-FCV-43-45B	ISTA-1100
2-SMV-43-766	ISTC - 1200(c)	1-FCV-43-45A	ISTA-1100	2-RTV-43-1281	ISTA-1100
2-SMV-43-767	ISTC - 1200(c)	2-FCV-43-45A	ISTA-1100	2-RTV-43-1282	ISTA-1100
2-SMV-43-768	ISTC - 1200(c)	0-FCV-43-46	ISTA-1100	1-RTV-43-1282	ISTA-1100
2-SMV-43-769	ISTC - 1200(c)	0-FCV-43-47	ISTA-1100	1-RTV-43-1283	ISTA-1100
2-SMV-43-770	ISTC - 1200(c)	0-CKV-43-234	ISTA-1100	1-RTV-43-1284	ISTA-1100
1-RTV-43-1281	ISTA-1100	0-SMV-43-1280	ISTA-1100	2-RTV-43-1284	ISTA-1100

Flow Diagram: 0-47W803-2

VALVE ID	EXEMPTION BASIS	VALVE ID	EXEMPTION BASIS	VALVE ID	EXEMPTION BASIS
1-VTV-3-356	ISTC-1200(a)	1-TV-3-352A	ISTA-1100	1-FCV-1-52	ISTC-1200skid
2-VTV-3-356	ISTC-1200(a)	2-CKV-3-358	ISTA-1100	2-FCV-1-52	ISTC-1200skid
1-CKV-3-358	ISTA-1100	2-CKV-3-362	ISTA-1100	2-TV-3-351A	ISTC-1200(a)
1-VTV-3-360	ISTC-1200(a)	1-RTV-3-368A	ISTC-1200(a)	1-TV-3-351A	ISTC-1200(a)
2-VTV-3-360	ISTC-1200(a)	1-RTV-3-369A	ISTC-1200(a)	2-TV-3-352A	ISTC-1200(a)
1-CKV-3-362	ISTA-1100	2-TV-3-373A	ISTA-1100	1-TV-3-353A	ISTC-1200(a)
1-RTV-1-496A	ISTC - 1200(a)	1-TV-3-373A	ISTA-1100	2-RTV-3-368A	ISTC-1200(a)
2-RTV-1-496A	ISTC - 1200(a)	2-TV-3-375A	ISTA-1100	2-RTV-3-369A	ISTC-1200(a)
1-RTV-1-497A	ISTC-1200(a)	1-TV-3-375A	ISTA-1100	2-TV-3-374A	ISTC-1200(a)
2-RTV-1-497A	ISTC-1200(a)	2-TTV-3-811	ISTA-1100	1-TV-3-374A	ISTC-1200(a)
1-VTV-3-923	ISTC-1200(a)	1-TTV-3-811	ISTA-1100	1-TV-3-376A	ISTC-1200(a)
1-DRV-3-925A	ISTA-1100	2-TTV-3-812	ISTA-1100	2-TV-3-376A	ISTC-1200(a)
2-DRV-3-925A	ISTA-1100	1-TTV-3-812	ISTA-1100	2-TV-3-866	ISTC-1200(a)
1-DRV-3-927A	ISTA-1100	1-DRV-3-926A	ISTC-1200(a)	1-TV-3-866	ISTC-1200(a)
2-DRV-3-927A	ISTA-1100	2-DRV-3-926A	ISTC-1200(a)	1-ISV-3-960	ISTC-1200(c)

Appendix I - Valves Exempt from the IST Program

VALVE ID	EXEMPTION BASIS	VALVE ID	EXEMPTION BASIS	VALVE ID	EXEMPTION BASIS
2-ISV-3-1001	ISTC-1200(c)	1-DRV-3-928A	ISTC-1200(a)	1-ISV-3-961	ISTC-1200(c)
1-DRV-3-857	ISTC-1200(a)	2-DRV-3-928A	ISTC-1200(a)	2-ISV-3-961	ISTC-1200(c)
1-DRV-3-856	ISTC-1200(a)	1-ISV-3-1002A	ISTA-1100	1-ISV-3-962	ISTC-1200(c)
1-BYV-3-840	ISTA-1100	2-ISV-3-1002A	ISTA-1100	2-ISV-3-962	ISTC-1200(c)
1-BYV-3-839	ISTA-1100	1-ISV-3-1005A	ISTA-1100	1-ISV-3-963	ISTC-1200(c)
1-BYV-3-845	ISTA-1100	2-ISV-3-1005A	ISTA-1100	2-ISV-3-963	ISTC-1200(c)
1-BYV-3-844	ISTA-1100	2-ISV-3-1012B	ISTA-1100	1-ISV-3-964	ISTC-1200(c)
1-DRV-3-853	ISTC-1200(a)	1-ISV-3-1012B	ISTA-1100	2-ISV-3-964	ISTC-1200(c)
1-DRV-3-852	ISTC-1200(a)	1-ISV-3-1016B	ISTA-1100	1-ISV-3-1000	ISTC-1200(c)
1-VTV-3-903	ISTC-1200(a)	2-ISV-3-1016B	ISTA-1100	2-ISV-3-1000	ISTC-1200(c)
1-VTV-3-900	ISTC-1200(a)	2-BYV-3-845	ISTA-1100	1-ISV-3-1001	ISTC-1200(c)
1-DRV-3-822	ISTC-1200(a)	1-TTV-3-807	ISTA-1100	2-RTV-3-339A	ISTC-1200(a)
1-VTV-3-848	ISTC-1200(a)	2-RTV-3-317A	ISTC-1200(a)	2-RTV-3-366A	ISTC-1200(a)
1-VTV-3-899	ISTC-1200(a)	1-RTV-3-332A	ISTC-1200(a)	1-RTV-3-366A	ISTC-1200(a)
1-VTV-3-849	ISTC-1200(a)	2-BYV-3-840	ISTA-1100	1-RTV-3-342A	ISTC-1200(a)
2-DRV-3-857	ISTC-1200(a)	2-TTV-3-807	ISTA-1100	2-RTV-3-342A	ISTC-1200(a)
2-DRV-3-856	ISTC-1200(a)	2-BYV-3-839	ISTA-1100	2-RTV-3-328A	ISTC-1200(a)
2-DRV-3-853	ISTC-1200(a)	2-BYV-3-844	ISTA-1100	2-RTV-3-365A	ISTC-1200(a)
2-DRV-3-852	ISTC-1200(a)	1-RTV-3-329A	ISTC-1200(a)	2-RTV-3-340A	ISTC-1200(a)
2-VTV-3-899	ISTC-1200(a)	2-RTV-3-316A	ISTC-1200(a)	2-ISV-3-827	ISTC-1200(c)
2-VTV-3-848	ISTC-1200(a)	1-RTV-3-316A	ISTC-1200(a)	2-ISV-3-828	ISTC-1200(c)
2-VTV-3-903	ISTC-1200(a)	1-RTV-3-341A	ISTC-1200(a)	1-ISV-3-827	ISTC-1200(c)
2-VTV-3-849	ISTC-1200(a)	1-RTV-3-317A	ISTC-1200(a)	1-ISV-3-828	ISTC-1200(c)
2-DRV-3-822	ISTC-1200(a)	2-RTV-3-341A	ISTC-1200(a)	1-ISV-3-835	ISTC-1200(c)
2-VTV-3-900	ISTC-1200(a)	2-RTV-3-329A	ISTC-1200(a)	1-ISV-3-836	ISTC-1200(c)
1-VTV-3-906	ISTC-1200(a)	1-RTV-3-365A	ISTC-1200(a)	1-ISV-3-816	ISTC-1200(c)
1-BYV-3-841	ISTA-1100	2-RTV-3-332A	ISTC-1200(a)	2-ISV-3-816	ISTC-1200(c)
1-DRV-3-823	ISTC-1200(a)	2-RTV-3-330A	ISTC-1200(a)	2-SMV-3-824	ISTC-1200(a)
1-VTV-3-896	ISTC-1200(a)	1-RTV-3-328A	ISTC-1200(a)	1-SMV-3-824	ISTC-1200(a)
1-VTV-3-847	ISTC-1200(a)	1-RTV-3-331A	ISTC-1200(a)	2-ISV-3-835	ISTC-1200(c)
1-VTV-3-850	ISTC-1200(a)	1-RTV-3-333A	ISTC-1200(a)	2-ISV-3-836	ISTC-1200(c)
1-VTV-3-842	ISTC-1200(a)	2-RTV-3-333A	ISTC-1200(a)	2-ISV-3-837	ISTC-1200(c)
1-DRV-3-851	ISTC-1200(a)	1-RTV-3-330A	ISTC-1200(a)	1-SMV-3-825	ISTC-1200(a)
1-DRV-3-858	ISTC-1200(a)	2-RTV-3-325A	ISTC-1200(a)	2-SMV-3-825	ISTC-1200(a)
1-BYV-3-843	ISTA-1100	1-RTV-3-334A	ISTC-1200(a)	1-ISV-3-817	ISTC-1200(c)

Appendix I - Valves Exempt from the IST Program

VALVE ID	EXEMPTION BASIS
1-DRV-3-854	ISTC-1200(a)
1-BYV-3-838	ISTA-1100
1-BYV-3-846	ISTA-1100
1-DRV-3-855	ISTC-1200(a)
2-VTV-3-896	ISTC-1200(a)
2-DRV-3-823	ISTC-1200(a)
2-VTV-3-842	ISTC-1200(a)
2-VTV-3-850	ISTC-1200(a)
2-VTV-3-847	ISTC-1200(a)
2-VTV-3-906	ISTC-1200(a)
2-DRV-3-851	ISTC-1200(a)
2-DRV-3-858	ISTC-1200(a)
2-DRV-3-854	ISTC-1200(a)
1-VTV-3-905	ISTC-1200(a)
1-VTV-3-897	ISTC-1200(a)
1-VTV-3-898	ISTC-1200(a)
1-VTV-3-904	ISTC-1200(a)
1-VTV-3-902	ISTC-1200(a)
1-VTV-3-907	ISTC-1200(a)
1-VTV-3-901	ISTC-1200(a)
1-DRV-3-890	ISTC-1200(a)
1-DRV-3-889	ISTC-1200(a)
1-DRV-3-888	ISTC-1200(a)
1-DRV-3-887	ISTC-1200(a)
1-BYV-3-882	ISTA-1100
1-BYV-3-886	ISTA-1100
1-BYV-3-881	ISTA-1100
1-BYV-3-885	ISTA-1100
1-BYV-3-880	ISTA-1100
1-BYV-3-879	ISTA-1100
1-BYV-3-884	ISTA-1100
1-BYV-3-883	ISTA-1100
2-VTV-3-898	ISTC-1200(a)
2-VTV-3-904	ISTC-1200(a)
2-VTV-3-902	ISTC-1200(a)

VALVE ID	EXEMPTION BASIS
2-RTV-3-344A	ISTC-1200(a)
2-RTV-3-343A	ISTC-1200(a)
1-RTV-3-343A	ISTC-1200(a)
1-RTV-3-327A	ISTC-1200(a)
1-RTV-3-367A	ISTC-1200(a)
1-RTV-3-326A	ISTC-1200(a)
1-RTV-3-314A	ISTC-1200(a)
1-RTV-3-325A	ISTC-1200(a)
2-RTV-3-336A	ISTC-1200(a)
1-RTV-3-344A	ISTC-1200(a)
1-RTV-3-336A	ISTC-1200(a)
1-RTV-3-335A	ISTC-1200(a)
2-RTV-3-335A	ISTC-1200(a)
2-RTV-3-367A	ISTC-1200(a)
1-TTV-3-808	ISTA-1100
2-BYV-3-843	ISTA-1100
2-BYV-3-846	ISTA-1100
1-RTV-3-364A	ISTC-1200(a)
2-BYV-3-838	ISTA-1100
2-RTV-3-314A	ISTC-1200(a)
1-RTV-3-315A	ISTC-1200(a)
2-RTV-3-326A	ISTC-1200(a)
2-RTV-3-327A	ISTC-1200(a)
2-BYV-3-841	ISTA-1100
2-TTV-3-808	ISTA-1100
2-DRV-3-855	ISTC-1200(a)
2-BYV-3-883	ISTA-1100
2-BYV-3-884	ISTA-1100
1-RTV-3-321A	ISTC-1200(a)
2-RTV-3-323A	ISTC-1200(a)
1-RTV-3-324A	ISTC-1200(a)
2-BYV-3-885	ISTA-1100
2-BYV-3-882	ISTA-1100
2-BYV-3-886	ISTA-1100
2-BYV-3-881	ISTA-1100

VALVE ID	EXEMPTION BASIS
2-ISV-3-817	ISTC-1200(c)
1-ISV-3-837	ISTC-1200(c)
2-ISV-3-826	ISTC-1200(c)
1-ISV-3-829	ISTC-1200(c)
1-ISV-3-834	ISTC-1200(c)
2-ISV-3-829	ISTC-1200(c)
2-ISV-3-834	ISTC-1200(c)
2-RTV-3-337A	ISTC-1200(a)
2-RTV-3-338A	ISTC-1200(a)
2-RTV-3-364A	ISTC-1200(a)
2-RTV-3-315A	ISTC-1200(a)
1-ISV-3-826	ISTC-1200(c)
1-RTV-3-319A	ISTC-1200(a)
1-RTV-3-320A	ISTC-1200(a)
2-RTV-3-321A	ISTC-1200(a)
1-RTV-3-371A	ISTC-1200(a)
1-RTV-3-323A	ISTC-1200(a)
1-RTV-3-370A	ISTC-1200(a)
1-RTV-3-372A	ISTC-1200(a)
1-RTV-3-318A	ISTC-1200(a)
2-RTV-3-363A	ISTC-1200(a)
1-ISV-3-819	ISTC-1200(c)
2-ISV-3-819	ISTC-1200(c)
1-ISV-3-870	ISTC-1200(c)
2-ISV-3-870	ISTC-1200(c)
1-ISV-3-878	ISTC-1200(c)
2-ISV-3-878	ISTC-1200(c)
1-ISV-3-869	ISTC-1200(c)
2-ISV-3-869	ISTC-1200(c)
1-ISV-3-868	ISTC-1200(c)
2-ISV-3-868	ISTC-1200(c)
1-ISV-3-867	ISTC-1200(c)
2-ISV-3-867	ISTC-1200(c)
1-ISV-3-877	ISTC-1200(c)
2-ISV-3-877	ISTC-1200(c)

Appendix I - Valves Exempt from the IST Program

VALVE ID	EXEMPTION BASIS
2-VTV-3-897	ISTC-1200(a)
2-VTV-3-905	ISTC-1200(a)
2-DRV-3-890	ISTC-1200(a)
2-DRV-3-889	ISTC-1200(a)
2-DRV-3-888	ISTC-1200(a)
2-DRV-3-887	ISTC-1200(a)
2-VTV-3-901	ISTC-1200(a)
2-VTV-3-907	ISTC-1200(a)

VALVE ID	EXEMPTION BASIS
2-BYV-3-879	ISTA-1100
2-BYV-3-880	ISTA-1100
2-RTV-3-371A	ISTC-1200(a)
2-RTV-3-324A	ISTC-1200(a)
1-RTV-3-322A	ISTC-1200(a)
2-RTV-3-322A	ISTC-1200(a)
1-RTV-3-363A	ISTC-1200(a)

VALVE ID	EXEMPTION BASIS
1-ISV-3-876	ISTC-1200(c)
2-ISV-3-876	ISTC-1200(c)
1-ISV-3-875	ISTC-1200(c)
2-ISV-3-875	ISTC-1200(c)
2-SMV-3-865	ISTC-1200(a)
1-SMV-3-865	ISTC-1200(a)
1-FCV-1-51	ISTC-1200skid
2-FCV-1-51	ISTC-1200skid

Appendix I - Valves Exempt from the IST Program

Flow Diagram: 0-47W809-3

VALVE ID	EXEMPTION BASIS	VALVE ID	EXEMPTION BASIS	VALVE ID	EXEMPTION BASIS
0-RTV-62-368A	ISTC - 1200(a)	1-RTV-62-371A	ISTC - 1200(a)	1-ISV-62-946	ISTA-1100
0-RTV-62-369A	ISTC - 1200(a)	2-RTV-62-371A	ISTC - 1200(a)	2-ISV-62-946	ISTA-1100
0-RTV-62-370A	ISTC - 1200(a)	1-RTV-62-372A	ISTC - 1200(a)	1-CKV-62-947	ISTA-1100
0-RTV-62-373A	ISTC - 1200(a)	2-RTV-62-372A	ISTC - 1200(a)	1-ISV-62-948	ISTA-1100
0-RTV-62-374A	ISTC - 1200(a)	1-ISV-62-956	ISTC - 1200(c)	2-ISV-62-948	ISTA-1100
1-ISV-62-945	ISTC - 1200(c)	2-ISV-62-956	ISTC - 1200(c)	1-ISV-62-949	ISTA-1100
2-ISV-62-945	ISTC - 1200(c)	1-ISV-62-957	ISTA-1100	2-ISV-62-949	ISTA-1100
1-ISV-62-951	ISTC - 1200(c)	2-ISV-62-957	ISTA-1100	1-CKV-62-950	ISTA-1100
2-ISV-62-951	ISTC - 1200(c)	0-CKV-62-958	ISTA-1100	2-CKV-62-950	ISTA-1100
2-ISV-62-952	ISTC - 1200(c)	1-ISV-62-963	ISTC - 1200(c)	1-ISV-62-952	ISTA-1100
2-ISV-62-953	ISTC - 1200(c)	2-ISV-62-963	ISTC - 1200(c)	1-ISV-62-953	ISTA-1100
1-DRV-62-961	ISTC - 1200(a)	0-BYV-62-965	ISTA-1100	1-RFV-62-955	ISTA-1100
1-BYV-62-962A	ISTC - 1200(c)	0-CKV-62-967	ISTA-1100	2-RFV-62-955	ISTA-1100
2-BYV-62-962A	ISTC - 1200(c)	1-ISV-62-971	ISTC - 1200(c)	0-ISV-62-959	ISTA-1100
1-BYV-62-962B	ISTC - 1200(c)	2-ISV-62-971	ISTC - 1200(c)	2-DRV-62-961	ISTA-1100
2-BYV-62-962B	ISTC - 1200(c)	1-ISV-62-972	ISTC - 1200(c)	0-DRV-62-966	ISTA-1100
1-BYV-62-962C	ISTC - 1200(c)	2-ISV-62-972	ISTC - 1200(c)	0-SMV-62-968	ISTA-1100
2-BYV-62-962C	ISTC - 1200(c)	1-ISV-62-973	ISTC - 1200(c)	0-ISV-62-969	ISTA-1100
1-BYV-62-962D	ISTC - 1200(c)	2-ISV-62-973	ISTC - 1200(c)	2-CKV-62-975	ISTA-1100
2-BYV-62-962D	ISTC - 1200(c)	0-CKV-62-976	ISTA-1100	1-CKV-62-975	ISTA-1100
1-BYV-62-964	ISTC - 1200(c)	1-ISV-62-977	ISTC - 1200(c)	1-SMV-62-980A	ISTA-1100
2-BYV-62-964	ISTC - 1200(c)	2-ISV-62-977	ISTC - 1200(c)	2-SMV-62-980A	ISTA-1100
0-ISV-62-974	ISTC - 1200(c)	1-ISV-62-979	ISTC - 1200(c)	2-ISV-62-982A	ISTA-1100
0-ISV-62-978	ISTC - 1200(c)	2-ISV-62-979	ISTC - 1200(c)	1-CKV-62-1078	ISTA-1100
0-ISV-62-1077	ISTC - 1200(c)	1-ISV-62-981A	ISTC - 1200(c)	2-CKV-62-1078	ISTA-1100
0-ISV-62-1080	ISTC - 1200(c)	2-ISV-62-981A	ISTC - 1200(c)	2-RFV-62-1079	ISTA-1100
		1-ISV-62-982A	ISTC - 1200(c)	1-RFV-62-1079	ISTA-1100

Flow Diagram: 0-47W809-4

VALVE ID	EXEMPTION BASIS	VALVE ID	EXEMPTION BASIS	VALVE ID	EXEMPTION BASIS
1-ISV-62-1023	ISTC - 1200(c)	2-ISV-62-1023	ISTC - 1200(c)	1-CKV-62-1022	ISTA-1100

Appendix I - Valves Exempt from the IST Program

Flow Diagram: 0-47W809-5

VALVE ID	EXEMPTION BASIS
1-RTV-62-242A	ISTC-1200(a)
2-RTV-62-242A	ISTC-1200(a)
1-RTV-62-399A	ISTC-1200(a)
2-RTV-62-399A	ISTC - 1200(a)
1-CKV-62-1028	ISTC - 1200(a)
1-ISV-62-1029	ISTC - 1200(c)
2-ISV-62-1029	ISTC-1200(a)
2-ISV-62-1030	ISTC-1200(a)
1-ISV-62-1031	ISTC - 1200(c)
2-ISV-62-1031	ISTC - 1200(c)
1-ISV-62-1034	ISTC-1200(a)
1-ISV-62-1047	ISTC - 1200(c)
2-ISV-62-1047	ISTC - 1200(c)
1-ISV-62-1048A	ISTC - 1200(c)
2-ISV-62-1048A	ISTC - 1200(c)
1-ISV-62-1048B	ISTC-1200(c)
2-ISV-62-1048B	ISTC-1200(c)
0-ISV-62-1049	ISTC-1200(c)
1-ISV-62-1049	ISTC-1200(c)
2-ISV-62-1049	ISTC-1200(c)
1-ISV-62-1050A	ISTC-1200(c)
2-ISV-62-1050A	ISTC-1200(c)
2-ISV-62-1050B	ISTC-1200(c)
1-ISV-62-1053A	ISTC-1200(c)
2-ISV-62-1053A	ISTC-1200(c)
1-ISV-62-1053B	ISTC-1200(c)
0-BYV-62-1057	ISTC-1200(c)
2-BYV-62-1057	ISTC - 1200(c)
1-DRV-62-1058	ISTC-1200(a)
2-DRV-62-1058	ISTC-1200(a)

VALVE ID	EXEMPTION BASIS
1-RTV-62-238A	ISTC - 1200(a)
2-RTV-62-238A	ISTC - 1200(a)
1-RTV-62-366A	ISTC - 1200(a)
1-RTV-62-367A	ISTC - 1200(a)
1-RTV-62-392A	ISTC - 1200(a)
2-RTV-62-392A	ISTC - 1200(a)
1-RTV-62-393A	ISTC - 1200(a)
2-RTV-62-393A	ISTC - 1200(a)
1-RTV-62-394A	ISTC - 1200(a)
2-RTV-62-394A	ISTC - 1200(a)
1-RTV-62-395A	ISTC - 1200(a)
2-RTV-62-395A	ISTC - 1200(a)
1-RTV-62-396A	ISTC - 1200(a)
2-RTV-62-396A	ISTC - 1200(a)
1-RTV-62-397A	ISTC - 1200(a)
2-RTV-62-397A	ISTC - 1200(a)
2-ISV-62-1053B	ISTC-1200(c)
1-ISV-62-1054A	ISTC - 1200(c)
2-ISV-62-1054A	ISTC - 1200(c)
2-ISV-62-1054B	ISTC - 1200(c)
1-ISV-62-1054B	ISTC - 1200(c)
1-ISV-62-1055A	ISTC - 1200(c)
2-ISV-62-1055A	ISTC - 1200(c)
2-ISV-62-1055B	ISTC - 1200(c)
1-ISV-62-1055B	ISTC - 1200(c)
1-ISV-62-1059	ISTC-1200(a)
2-ISV-62-1060	ISTC-1200(c)
1-ISV-62-1060	ISTC-1200(c)
1-ISV-62-1061	ISTC-1200(c)
2-ISV-62-1061	ISTC-1200(c)

VALVE ID	EXEMPTION BASIS
2-FCV-62-237	ISTA-1100
1-FCV-62-237	ISTA-1100
0-FCV-62-241	ISTA-1100
2-RTV-62-366A	ISTA-1100
2-RTV-62-367A	ISTA-1100
1-RTV-62-398A	ISTC - 1200(a)
2-RTV-62-398A	ISTC - 1200(a)
1-ISV-62-1030	ISTA-1100
0-ISV-62-1030	ISTA-1100
0-ISV-62-1031	ISTA-1100
0-ISV-62-1032	ISTA-1100
2-ISV-62-1034	ISTC-1200(a)
1-CKV-62-1035	ISTA-1100
2-CKV-62-1035	ISTA-1100
0-ISV-62-1045	ISTC-1200(c)
0-CKV-62-1046	ISTA-1100
1-ISV-62-1050B	ISTC-1200(c)
2-FLV-62-1051A	ISTC-1200(a)
2-FLV-62-1051B	ISTC-1200(a)
0-SMV-62-1056	ISTC-1200(a)
2-SMV-62-1056	ISTC-1200(a)
1-SMV-62-1056	ISTC-1200(a)
1-BYV-62-1057	ISTC-1200(c)
0-DRV-62-1058	ISTC-1200(a)
2-ISV-62-1059	ISTC-1200(a)
2-VTV-62-1062	ISTC - 1200(a)
1-DRV-62-1063	ISTC - 1200(a)
2-DRV-62-1063	ISTC - 1200(a)
1-FLV-62-1051A	ISTC-1200(a)
1-FLV-62-1051B	ISTC-1200(a)

Appendix I - Valves Exempt from the IST Program

Flow Diagram: 0-47W809-7

VALVE ID	EXEMPTION BASIS	VALVE ID	EXEMPTION BASIS	VALVE ID	EXEMPTION BASIS
0-CKV-84-523	ISTA-1100	0-RTV-84-50A	ISTA-1100	1-RTV-84-54A	ISTC - 1200(a)
0-ISV-84-521	ISTA-1100	0-RTV-84-51A	ISTA-1100	2-RTV-84-54A	ISTC - 1200(a)
0-ISV-84-525	ISTA-1100	1-ISV-84-501	ISTC - 1200(c)	1-RTV-84-55A	ISTC - 1200(a)
1-CKV-84-503	ISTA-1100	2-ISV-84-501	ISTC - 1200(c)	2-RTV-84-55A	ISTC - 1200(a)
2-CKV-84-503	ISTA-1100	1-ISV-84-505	ISTC - 1200(c)	1-RTV-84-56A	ISTC - 1200(a)
0-ISV-84-526	ISTA-1100	2-ISV-84-505	ISTC - 1200(c)	2-RTV-84-56A	ISTC - 1200(a)
0-ISV-84-522	ISTA-1100	1-ISV-84-502	ISTC - 1200(c)	1-RTV-84-57A	ISTC - 1200(a)
0-CKV-84-524	ISTA-1100	2-ISV-84-502	ISTC - 1200(c)	2-RTV-84-57A	ISTC - 1200(a)
1-CKV-84-504	ISTA-1100	0-RTV-84-52A	ISTA-1100	1-ISV-84-506	ISTC - 1200(c)
2-CKV-84-504	ISTA-1100	0-RTV-84-53A	ISTA-1100	2-ISV-84-506	ISTC - 1200(c)
0-BYV-84-513	ISTC - 1200(c)	0-ISV-84-532	ISTA-1100	1-ISV-84-528	ISTC - 1200(c)
0-BYV-84-514	ISTC - 1200(c)	0-RTV-84-58A	ISTA-1100	2-ISV-84-528	ISTC - 1200(c)
0-DRV-84-535	ISTC - 1200(a)	0-SMV-84-527	ISTC - 1200(a)	1-VTV-84-500	ISTC - 1200(a)
		0-VTV-84-534	ISTC - 1200(a)	2-VTV-84-500	ISTC - 1200(a)

Flow Diagram: 0-47W819-1

VALVE ID	EXEMPTION BASIS	VALVE ID	EXEMPTION BASIS
1-TV-81-529	ISTC - 1200(a)	2-TV-81-529	ISTC-1200(a)

Flow Diagram: 0-47W830-1

VALVE ID	EXEMPTION BASIS	VALVE ID	EXEMPTION BASIS	VALVE ID	EXEMPTION BASIS
1-TV-77-481	ISTC - 1200(a)	1-ISV-77-510	ISTA-1100	1-TV-77-509	ISTA-1100
1-CKV-77-505	ISTA-1100	1-ISV-77-592	ISTA-1100	1-ISV-77-593	ISTA-1100

Flow Diagram: 0-47W830-1A

VALVE ID	EXEMPTION BASIS	VALVE ID	EXEMPTION BASIS	VALVE ID	EXEMPTION BASIS
2-TV-77-481	ISTC - 1200(a)	2-TV-77-509	ISTA-1100	2-ISV-77-593	ISTA-1100
2-ISV-77-592	ISTA-1100	2-ISV-77-510	ISTA-1100	2-CKV-77-505	ISTA-1100

Flow Diagram: 0-47W830-3

VALVE ID	EXEMPTION BASIS	VALVE ID	EXEMPTION BASIS	VALVE ID	EXEMPTION BASIS
0-FCV-77-23	ISTA-1100	0-FCV-77-46	ISTA-1100	0-RTV-77-386A	ISTA-1100
0-CKV-77-696A	ISTA-1100	0-FCV-77-49	ISTA-1100	0-ISV-77-697	ISTA-1100
0-DRV-77-698	ISTA-1100	0-FCV-77-51	ISTA-1100	0-ISV-77-699	ISTA-1100
0-CKV-77-701	ISTA-1100	0-ISV-77-695A	ISTA-1100	0-RFV-77-700	ISTA-1100

Appendix I - Valves Exempt from the IST Program

Flow Diagram: 0-47W830-4

VALVE ID	EXEMPTION BASIS	VALVE ID	EXEMPTION BASIS	VALVE ID	EXEMPTION BASIS
0-FCV-77-86	ISTC - 1200(a)	0-PCV-77-89	ISTC - 1200(a)	0-RTV-77-103A	ISTC - 1200(a)
0-FCV-77-90	ISTC - 1200(a)	0-PCV-77-92	ISTC - 1200(a)	0-RTV-77-118A	ISTC - 1200(a)
0-FCV-77-104	ISTC - 1200(a)	0-FCV-77-93	ISTA-1100	0-ISV-43-236	ISTA-1100
0-FCV-77-111	ISTC - 1200(a)	0-FCV-77-94	ISTA-1100	0-CKV-77-373	ISTA-1100
0-FCV-77-119	ISTA-1100	0-PCV-77-95	ISTC - 1200(a)	0-RTV-77-395A	ISTC - 1200(a)
0-ISV-77-233V	ISTC - 1200(a)	0-LCV-77-95A	ISTA-1100	0-RTV-77-396A	ISTC - 1200(a)
0-ISV-77-236V	ISTC - 1200(a)	0-LCV-77-95B	ISTA-1100	0-RTV-77-397A	ISTC-1200(a)
0-ISV-77-415A	ISTC - 1200(c)	0-PCV-77-97	ISTC - 1200(a)	0-RTV-77-398A	ISTC - 1200(a)
0-ISV-77-416A	ISTC - 1200(c)	0-PCV-77-99	ISTC - 1200(a)	0-RTV-77-399A	ISTC-1200(a)
0-ISV-77-737A	ISTA-1100	0-PCV-77-100A	ISTC - 1200(a)	0-RTV-77-400A	ISTC - 1200(a)
0-ISV-77-737B	ISTC - 1200(c)	0-PCV-77-100B	ISTC - 1200(a)	0-RTV-77-401A	ISTC - 1200(a)
0-ISV-77-738A	ISTC - 1200(c)	0-PCV-77-101A	ISTC - 1200(a)	0-RTV-77-402A	ISTA-1100
0-ISV-77-738B	ISTC - 1200(c)	0-PCV-77-101B	ISTC - 1200(a)	0-RTV-77-403A	ISTA-1100
0-ISV-77-739A	ISTC - 1200(c)	0-PCV-77-102A	ISTC - 1200(a)	0-RTV-77-404A	ISTC - 1200(a)
0-ISV-77-739B	ISTA-1100	0-PCV-77-102B	ISTC - 1200(a)	0-RTV-77-579A1	ISTC - 1200(a)
0-ISV-77-740A	ISTC - 1200(c)	0-PCV-77-103	ISTC - 1200(a)	0-RTV-77-579A2	ISTC - 1200(a)
0-ISV-77-740B	ISTC - 1200(c)	0-PCV-77-106	ISTC - 1200(a)	0-CKV-77-736	ISTA-1100
0-ISV-77-740C	ISTC - 1200(c)	0-PCV-77-107	ISTC - 1200(a)	0-CKV-77-741A	ISTA-1100
0-ISV-77-740D	ISTC - 1200(c)	0-FCV-77-108	ISTA-1100	0-CKV-77-741B	ISTA-1100
0-ISV-77-740E	ISTC - 1200(c)	0-FCV-77-109	ISTA-1100	0-CKV-77-741C	ISTA-1100
0-ISV-77-740F	ISTC - 1200(c)	0-PCV-77-110	ISTC - 1200(a)	0-CKV-77-741D	ISTA-1100
0-ISV-77-740G	ISTC - 1200(c)	0-LCV-77-110A	ISTA-1100	0-CKV-77-741E	ISTA-1100
0-ISV-77-740H	ISTC - 1200(c)	0-LCV-77-110B	ISTA-1100	0-CKV-77-741F	ISTA-1100
0-ISV-77-740J	ISTC - 1200(c)	0-PCV-77-112	ISTC - 1200(a)	0-CKV-77-741G	ISTA-1100
0-ISV-77-742A	ISTC - 1200(c)	0-PCV-77-113A	ISTC - 1200(a)	0-CKV-77-741H	ISTA-1100
0-ISV-77-742B	ISTC - 1200(c)	0-PCV-77-113B	ISTC - 1200(a)	0-CKV-77-741J	ISTA-1100
0-ISV-77-742C	ISTC - 1200(c)	0-PCV-77-114A	ISTC - 1200(a)	0-RFV-77-743A	ISTA-1100
0-ISV-77-742D	ISTC - 1200(c)	0-PCV-77-114B	ISTC - 1200(a)	0-RFV-77-743B	ISTA-1100
0-ISV-77-742E	ISTC - 1200(c)	0-PCV-77-115A	ISTC - 1200(a)	0-RFV-77-743C	ISTA-1100
0-ISV-77-742F	ISTC - 1200(c)	0-PCV-77-115B	ISTC - 1200(a)	0-RFV-77-743D	ISTA-1100
0-ISV-77-742G	ISTC - 1200(c)	0-PCV-77-116	ISTA-1100	0-RFV-77-743E	ISTA-1100
0-ISV-77-742H	ISTC - 1200(c)	0-PCV-77-117	ISTC - 1200(a)	0-RFV-77-743F	ISTA-1100
0-ISV-77-742J	ISTC - 1200(c)	0-PCV-77-118	ISTC - 1200(a)	0-RFV-77-743G	ISTA-1100
0-ISV-77-744A	ISTC - 1200(c)	0-PCV-77-145A	ISTC - 1200(a)	0-RFV-77-743H	ISTA-1100

Appendix I - Valves Exempt from the IST Program

VALVE ID	EXEMPTION BASIS
0-ISV-77-744B	ISTC - 1200(c)
0-ISV-77-744C	ISTC - 1200(c)
0-ISV-77-744D	ISTC - 1200(c)
0-ISV-77-744E	ISTC - 1200(c)
0-ISV-77-744F	ISTC - 1200(c)
0-ISV-77-744G	ISTC - 1200(c)
0-ISV-77-744H	ISTC - 1200(c)
0-ISV-77-744J	ISTC - 1200(c)
0-ISV-77-746A	ISTC - 1200(c)
0-ISV-77-746B	ISTC - 1200(c)
0-ISV-77-746C	ISTC - 1200(c)
0-ISV-77-746D	ISTC - 1200(c)
0-ISV-77-746E	ISTC - 1200(c)
0-ISV-77-746F	ISTC - 1200(c)
0-ISV-77-746G	ISTC - 1200(c)
0-ISV-77-746H	ISTC - 1200(c)
0-ISV-77-746J	ISTC - 1200(c)
0-ISV-77-748A	ISTC - 1200(c)
0-ISV-77-748B	ISTC - 1200(c)
0-ISV-77-748C	ISTC - 1200(c)
0-ISV-77-748D	ISTC - 1200(c)
0-ISV-77-748E	ISTC - 1200(c)

VALVE ID	EXEMPTION BASIS
0-PCV-77-145B	ISTC - 1200(a)
0-PCV-77-146A	ISTC - 1200(a)
0-PCV-77-146B	ISTC - 1200(a)
0-PCV-77-147A	ISTC - 1200(a)
0-PCV-77-147B	ISTC - 1200(a)
0-ISV-77-748F	ISTC - 1200(c)
0-ISV-77-748G	ISTC - 1200(c)
0-ISV-77-748H	ISTC - 1200(c)
0-ISV-77-748J	ISTC - 1200(c)
0-ISV-77-749	ISTC - 1200(c)
0-ISV-77-750	ISTC - 1200(c)
0-ISV-77-751A	ISTC - 1200(c)
0-ISV-77-751B	ISTC - 1200(c)
0-ISV-77-751C	ISTC - 1200(c)
0-ISV-77-751D	ISTC - 1200(c)
0-ISV-77-751E	ISTC - 1200(c)
0-ISV-77-751F	ISTC - 1200(c)
0-ISV-77-751G	ISTC - 1200(c)
0-ISV-77-751H	ISTC - 1200(c)
0-ISV-77-751J	ISTC - 1200(c)
0-ISV-77-752	ISTC - 1200(c)
0-ISV-77-753	ISTC - 1200(c)
0-DRV-77-760A	ISTA-1100

VALVE ID	EXEMPTION BASIS
0-RFV-77-743J	ISTA-1100
0-RTV-77-754A1	ISTC - 1200(a)
0-RTV-77-754A2	ISTC - 1200(a)
0-RTV-77-755A1	ISTC - 1200(a)
0-RTV-77-755A2	ISTC - 1200(a)
0-RTV-77-756A1	ISTC - 1200(a)
0-RTV-77-756A2	ISTC - 1200(a)
0-CKV-77-757A	ISTA-1100
0-CKV-77-757B	ISTA-1100
0-RFV-77-758A	ISTA-1100
0-RFV-77-758B	ISTA-1100
0-DRV-77-760B	ISTA-1100
0-RTV-77-762A	ISTC - 1200(a)
0-RTV-77-763A	ISTA-1100
0-RTV-77-764A	ISTC - 1200(a)
0-ISV-77-1070	ISTA-1100
0-ISV-77-1071	ISTA-1100
0-ISV-77-1072	ISTA-1100
0-RTV-77-1116A	ISTC - 1200(a)
1-ISV-77-1120	ISTC - 1200(c)
0-RTV-77-1128A1	ISTC-1200(a)
0-RTV-77-1128A2	ISTC-1200(a)
0-RFV-77-3001	ISTA-1100

Flow Diagram: 0-47W830-6

VALVE ID	EXEMPTION BASIS
1-TV-68-848	ISTC-1200(a)

VALVE ID	EXEMPTION BASIS
1-TV-63-867	ISTC-1200(a)

Flow Diagram: 0-47W830-6A

VALVE ID	EXEMPTION BASIS
2-TV-68-848	ISTC-1200(a)

VALVE ID	EXEMPTION BASIS
2-TV-63-867	ISTC-1200(a)

Appendix I - Valves Exempt from the IST Program

Flow Diagram: 0-47W832-2

VALVE ID	EXEMPTION BASIS
0-ISV-26-539	ISTC - 1200(c)
0-ISV-26-549	ISTC - 1200(c)
0-ISV-26-553	ISTC - 1200(c)
0-ISV-26-554	ISTC - 1200(c)
0-ISV-26-556	ISTC - 1200(c)
0-ISV-26-558	ISTC - 1200(c)
0-ISV-26-560	ISTC - 1200(c)
0-ISV-26-562	ISTC - 1200(c)
0-ISV-26-571	ISTC - 1200(c)
0-ISV-26-580	ISTC - 1200(c)
0-FCV-26-6	ISTA-1100
0-FCV-26-13	ISTA-1100

VALVE ID	EXEMPTION BASIS
0-RTV-26-529A	ISTA-1100
0-RTV-26-530A	ISTA-1100
0-RTV-26-531A	ISTA-1100
0-RTV-26-532A	ISTA-1100
0-CKV-26-563	ISTA-1100
0-ISV-26-575	ISTC - 1200(c)
0-ISV-26-582	ISTC - 1200(c)
0-TV-26-586	ISTA-1100
0-TV-26-587	ISTA-1100
0-TV-26-590	ISTC - 1200(c)
0-TV-26-591	ISTC - 1200(c)
0-VTV-26-1567	ISTA-1100
0-VTV-26-1568	ISTA-1100

VALVE ID	EXEMPTION BASIS
0-CKV-26-550	ISTA-1100
0-CKV-26-555	ISTA-1100
0-CKV-26-557	ISTA-1100
0-CKV-26-559	ISTA-1100
0-CKV-26-561	ISTA-1100
0-CKV-26-572	ISTA-1100
0-CKV-26-581	ISTA-1100
0-FCV-26-3	ISTA-1100
0-FCV-26-141	ISTA-1100
0-FCV-26-7	ISTA-1100
0-FCV-26-8	ISTA-1100
0-FCV-26-142	ISTA-1100
0-FCV-26-14	ISTA-1100

Flow Diagram: 0-47W840-1

VALVE ID	EXEMPTION BASIS
1-CKV-18-556A	ISTC-1200skid
1-CKV-18-557A	ISTC-1200skid
1-DRV-18-592	ISTC - 1200(a)
1-DRV-18-593	ISTC - 1200(a)

VALVE ID	EXEMPTION BASIS
1-CKV-18-558A	ISTC-1200skid
1-CKV-18-563A	ISTC-1200skid
1-CKV-18-565A	ISTC-1200skid
1-CKV-18-570A	ISTC-1200skid

VALVE ID	EXEMPTION BASIS
1-CKV-18-559A	ISTC-1200skid
2-CKV-18-559A	ISTC-1200skid
1-RFV-18-560A	ISTC-1200skid
1-CKV-18-566A	ISTC-1200skid
1-RFV-18-567A	ISTC-1200skid

Flow Diagram: 0-47W840-1A

VALVE ID	EXEMPTION BASIS
1-CKV-18-556B	ISTC-1200skid
2-CKV-18-557A	ISTC-1200skid
1-CKV-18-557B	ISTC-1200skid
2-DRV-18-594	ISTC - 1200(a)
2-DRV-18-595	ISTC - 1200(a)
1-DRV-18-596	ISTC - 1200(a)
1-DRV-18-597	ISTC - 1200(a)

VALVE ID	EXEMPTION BASIS
2-CKV-18-556A	ISTC-1200skid
2-CKV-18-558A	ISTC-1200skid
1-CKV-18-558B	ISTC-1200skid
2-CKV-18-563A	ISTC-1200skid
1-CKV-18-563B	ISTC-1200skid
2-CKV-18-565A	ISTC-1200skid
1-CKV-18-565B	ISTC-1200skid
1-CKV-18-570B	ISTC-1200skid

VALVE ID	EXEMPTION BASIS
1-CKV-18-559B	ISTC-1200skid
2-RFV-18-560A	ISTC-1200skid
1-RFV-18-560B	ISTC-1200skid
2-CKV-18-566A	ISTC-1200skid
1-CKV-18-566B	ISTC-1200skid
2-RFV-18-567A	ISTC-1200skid
1-RFV-18-567B	ISTC-1200skid
2-CKV-18-570A	ISTC-1200skid

Flow Diagram: 0-47W845-1

Appendix I - Valves Exempt from the IST Program

VALVE ID	EXEMPTION BASIS
1-FLV-67-653B	ISTC-1200(c)
1-DRV-67-1121	ISTC-1200(a)
1-VTV-67-1122	ISTC-1200(a)
2-DRV-67-1123	ISTC-1200(a)
1-DRV-67-1124	ISTC-1200(a)
1-VTV-67-1125	ISTC - 1200(a)
2-DRV-67-1126	ISTC-1200(a)
0-ISV-67-512	ISTA-1100
0-VTV-67-501A	ISTC-1200(c)
0-VTV-67-501B	ISTC-1200(c)
0-VTV-67-501C	ISTC-1200(c)
0-VTV-67-501D	ISTC-1200(c)
0-ISV-67-504A	ISTC-1200(c)
0-ISV-67-504B	ISTC-1200(c)
0-ISV-67-504C	ISTC-1200(c)
0-ISV-67-504D	ISTC-1200(c)
0-RTV-67-816A	ISTC-1200(a)
0-RTV-67-817A	ISTC-1200(a)
0-RTV-67-818A	ISTC-1200(a)
0-RTV-67-820A	ISTC-1200(a)
0-THV-67-506A	ISTC-1200(c)
0-THV-67-506B	ISTC-1200(c)
0-THV-67-506C	ISTC-1200(c)
0-THV-67-506D	ISTC-1200(c)
1-DRV-67-929	ISTC-1200(a)
1-DRV-67-980A	ISTC-1200(a)
1-DRV-67-981A	ISTC-1200(a)
1-FLV-67-651A	ISTC-1200(c)
1-ISV-67-505A	ISTC-1200(c)
1-ISV-67-506A	ISTC - 1200(c)
2-DRV-67-929	ISTC-1200(a)
2-DRV-67-980A	ISTC-1200(a)
2-DRV-67-981A	ISTC-1200(a)
2-FLV-67-651A	ISTC-1200(c)
2-ISV-67-505A	ISTC-1200(c)

VALVE ID	EXEMPTION BASIS
2-RTV-67-516A	ISTC-1200(a)
2-RTV-67-517A	ISTC-1200(a)
1-RTV-67-518A	ISTC-1200(a)
1-RTV-67-519A	ISTC-1200(a)
2-RTV-67-520A	ISTC-1200(a)
2-RTV-67-521A	ISTC-1200(a)
1-RTV-67-522A	ISTC-1200(a)
1-RTV-67-523A	ISTC-1200(a)
1-LOV-67-943A	ISTC - 1200(a)
1-ISV-67-1117	ISTC - 1200(c)
1-ISV-67-1118	ISTC - 1200(c)
2-ISV-67-1119	ISTC - 1200(c)
2-ISV-67-1120	ISTC - 1200(c)
1-ISV-67-507A	ISTC-1200(c)
2-ISV-67-507A	ISTC-1200(c)
1-ISV-67-507B	ISTC-1200(c)
1-ISV-67-511A	ISTC-1200(c)
2-ISV-67-511A	ISTC-1200(c)
1-ISV-67-942A	ISTC-1200(c)
2-ISV-67-942A	ISTC-1200(c)
1-LOV-67-941A	ISTC - 1200(a)
2-LOV-67-941A	ISTC - 1200(a)
1-ISV-67-516A	ISTC-1200(c)
2-ISV-67-516A	ISTC-1200(c)
1-ISV-67-927A	ISTC-1200(a)
2-ISV-67-927A	ISTC-1200(a)
1-RTV-67-800A	ISTC-1200(a)
2-RTV-67-800A	ISTC-1200(a)
1-RTV-67-800B	ISTC-1200(a)
2-RTV-67-800B	ISTC-1200(a)
1-RTV-67-827A	ISTC-1200(a)
2-RTV-67-827A	ISTC-1200(a)
1-RTV-67-827B	ISTC-1200(a)
2-RTV-67-827B	ISTC-1200(a)
1-RTV-67-828A	ISTC-1200(a)

VALVE ID	EXEMPTION BASIS
0-RTV-90-250	ISTA-1100
0-RTV-90-251	ISTA-1100
0-RTV-90-252	ISTA-1100
0-RTV-90-253	ISTA-1100
1-THV-67-510A	ISTC - 1200(c)
2-THV-67-510A	ISTC - 1200(c)
1-THV-67-510B	ISTC - 1200(c)
2-THV-67-510B	ISTC - 1200(c)
1-THV-67-515A	ISTC - 1200(c)
2-THV-67-515A	ISTC - 1200(c)
2-THV-67-515B	ISTC - 1200(c)
1-THV-67-515B	ISTC-1200(b)
2-LOV-67-943B	ISTC-1200(c)
1-ISV-67-1000A	ISTC-1200(a)
1-ISV-67-1001B	ISTC-1200(a)
2-ISV-67-1007A	ISTC-1200(a)
2-ISV-67-1008B	ISTC-1200(a)
1-THV-67-8020	ISTC - 1200(c)
2-THV-67-8020	ISTC - 1200(c)
1-RTV-67-943A	ISTC-1200(a)
2-RTV-67-943A	ISTC-1200(a)
1-RTV-67-944A	ISTC-1200(a)
2-RTV-67-944A	ISTC-1200(a)
1-VTV-67-518A	ISTC - 1200(a)
2-VTV-67-518A	ISTC - 1200(a)
1-RTV-67-905A	ISTC-1200(a)
2-RTV-67-905A	ISTC-1200(a)
1-RTV-67-906A	ISTC-1200(a)
2-RTV-67-906A	ISTC-1200(a)
2-FCV-67-24	ISTC-1200(c)
1-FCV-67-22	ISTC-1200(c)
1-FCV-67-24	ISTC-1200(c)
2-FCV-67-22	ISTC-1200(c)
1-DRV-82-663A1	ISTC-1200(a)
2-DRV-82-663A1	ISTC-1200(a)

Appendix I - Valves Exempt from the IST Program

VALVE ID	EXEMPTION BASIS
2-ISV-67-506A	ISTC - 1200(c)
2-DRV-82-663A2	ISTC-1200(a)
0-THV-67-506F	ISTC-1200(c)
0-THV-67-506G	ISTC-1200(c)
0-THV-67-506H	ISTC-1200(c)
0-THV-67-506E	ISTC-1200(c)
0-ISV-67-504E	ISTC-1200(c)
0-ISV-67-504F	ISTC-1200(c)
0-ISV-67-504G	ISTC-1200(c)
0-ISV-67-504H	ISTC-1200(c)
0-VTV-67-501E	ISTC-1200(c)
0-VTV-67-501F	ISTC-1200(c)
0-VTV-67-501G	ISTC-1200(c)
0-VTV-67-501H	ISTC-1200(c)
0-RTV-67-811A	ISTC-1200(a)
0-RTV-67-812A	ISTC-1200(a)
0-RTV-67-813A	ISTC-1200(a)
0-RTV-67-814A	ISTC-1200(a)
0-RTV-67-815A	ISTC-1200(a)
1-ISV-67-506B	ISTC - 1200(c)
1-ISV-67-505B	ISTC-1200(c)
1-FLV-67-652B	ISTC-1200(c)
1-DRV-67-981B	ISTC-1200(a)
1-DRV-67-980B	ISTC-1200(a)
1-DRV-67-932	ISTC-1200(a)
2-ISV-67-506B	ISTC - 1200(c)
2-ISV-67-505B	ISTC-1200(c)
2-FLV-67-652B	ISTC-1200(c)
2-DRV-67-981B	ISTC-1200(a)
2-DRV-67-980B	ISTC-1200(a)
2-DRV-67-932	ISTC-1200(a)
2-DRV-82-663B2	ISTC-1200(a)

VALVE ID	EXEMPTION BASIS
2-RTV-67-828A	ISTC-1200(a)
1-RTV-67-828B	ISTC-1200(a)
2-RTV-67-828B	ISTC-1200(a)
1-RTV-67-901A	ISTC-1200(a)
2-RTV-67-901A	ISTC-1200(a)
1-RTV-67-902A	ISTC-1200(a)
2-RTV-67-902A	ISTC-1200(a)
1-RTV-67-802A	ISTC-1200(a)
2-RTV-67-802A	ISTC-1200(a)
1-RTV-67-802B	ISTC-1200(a)
2-RTV-67-802B	ISTC-1200(a)
1-RTV-67-825A	ISTC-1200(a)
2-RTV-67-825A	ISTC-1200(a)
1-RTV-67-825B	ISTC-1200(a)
2-RTV-67-825B	ISTC-1200(a)
1-RTV-67-826A	ISTC-1200(a)
2-RTV-67-826A	ISTC-1200(a)
1-RTV-67-826B	ISTC-1200(a)
2-RTV-67-826B	ISTC-1200(a)
1-ISV-67-930B	ISTC-1200(a)
2-ISV-67-930B	ISTC-1200(a)
1-ISV-67-937B	ISTC-1200(c)
2-ISV-67-937B	ISTC-1200(c)
1-ISV-67-516B	ISTC-1200(c)
2-ISV-67-516B	ISTC-1200(c)
1-LOV-67-936B	ISTC - 1200(a)
2-LOV-67-936B	ISTC - 1200(a)
1-ISV-67-511B	ISTC-1200(c)
2-ISV-67-511B	ISTC-1200(c)
2-ISV-67-507B	ISTC-1200(c)
1-ISV-67-507C	ISTC-1200(c)
1-ISV-67-507D	ISTC-1200(c)

VALVE ID	EXEMPTION BASIS
1-DRV-82-664A2	ISTC-1200(a)
0-RTV-67-514A	ISTC-1200(a)
0-RTV-67-819A	ISTC-1200(a)
1-VTV-67-519A	ISTC - 1200(a)
2-VTV-67-519A	ISTC - 1200(a)
1-VTV-67-907A	ISTC-1200(a)
2-VTV-67-907A	ISTC-1200(a)
1-VTV-67-982	ISTC - 1200(a)
2-VTV-67-982	ISTC - 1200(a)
2-DRV-82-664A2	ISTC - 1200(a)
2-DRV-82-664B2	ISTC - 1200(a)
2-DRV-82-663B1	ISTC-1200(a)
1-DRV-82-664B2	ISTC-1200(a)
1-VTV-67-983	ISTC - 1200(a)
2-VTV-67-983	ISTC - 1200(a)
1-VTV-67-907B	ISTC-1200(a)
2-VTV-67-907B	ISTC-1200(a)
1-VTV-67-519B	ISTC - 1200(a)
2-VTV-67-519B	ISTC - 1200(a)
1-DRV-82-663B1	ISTC-1200(a)
0-ISV-67-508	ISTA-1100
0-RTV-67-511A	ISTC-1200(a)
2-DRV-82-663B2	ISTC-1200(a)
1-RTV-67-925A	ISTC-1200(a)
2-RTV-67-925A	ISTC-1200(a)
1-RTV-67-926A	ISTC-1200(a)
2-RTV-67-926A	ISTC-1200(a)
1-VTV-67-518B	ISTC - 1200(a)
2-VTV-67-518B	ISTC - 1200(a)
1-THV-67-8021	ISTC - 1200(c)
2-THV-67-8021	ISTC - 1200(c)

Flow Diagram: 0-47W845-2

Appendix I - Valves Exempt from the IST Program

VALVE ID	EXEMPTION BASIS
1-DRV-67-547	ISTC-1200(a)
1-DRV-67-548	ISTC-1200(a)
1-ISV-67-551	ISTC - 1200(c)
0-THV-67-623B	ISTC-1200(c)
1-DRV-67-946A	ISTC-1200(a)
1-DRV-67-985	ISTC-1200(a)
1-DRV-67-1011	ISTC-1200(a)
1-DRV-67-1012	ISTC-1200(a)
0-VTV-67-624A	ISTC-1200(a)
0-TV-67-621A	ISTC-1200(a)
0-THV-67-623A	ISTC-1200(c)
0-TV-67-895A	ISTC-1200(a)
0-TV-67-895B	ISTC-1200(a)
0-VTV-67-1110	ISTC-1200(a)
0-TV-67-622A	ISTC-1200(a)
0-VTV-67-619A	ISTC-1200(a)
0-ISV-67-528A	ISTC - 1200(c)
0-ISV-67-1106	ISTC-1200(c)
0-ISV-67-552	ISTC-1200(c)
0-ISV-67-620A	ISTC-1200(c)
1-DRV-67-536A	ISTC-1200(a)
1-DRV-67-950A	ISTC-1200(a)
1-ISV-67-524A	ISTC - 1200(c)
1-ISV-67-530A	ISTC - 1200(c)
1-ISV-67-533A	ISTC - 1200(c)
1-ISV-67-538A	ISTC - 1200(c)
1-FLV-67-927	ISTC - 1200(a)
2-DRV-67-1011	ISTC-1200(a)
2-DRV-67-1012	ISTC-1200(a)
2-DRV-67-536A	ISTC-1200(a)
2-DRV-67-951A	ISTC-1200(a)
2-DRV-67-0547	ISTC-1200(a)
2-DRV-67-0548	ISTC-1200(a)
2-ISV-67-524A	ISTC - 1200(c)
2-ISV-67-530A	ISTC - 1200(c)

VALVE ID	EXEMPTION BASIS
1-THV-67-527A	ISTC - 1200(c)
2-THV-67-527A	ISTC - 1200(c)
1-THV-67-527B	ISTC - 1200(c)
2-THV-67-527B	ISTC - 1200(c)
1-THV-67-537A	ISTC - 1200(c)
2-THV-67-537A	ISTC - 1200(c)
1-THV-67-537B	ISTC - 1200(c)
2-THV-67-537B	ISTC - 1200(c)
1-SMV-67-549	ISTC - 1200(a)
1-THV-67-555	ISTC - 1200(c)
2-THV-67-555	ISTC - 1200(c)
1-ISV-67-711	ISTC - 1200(c)
1-ISV-67-712	ISTC - 1200(c)
2-ISV-67-712	ISTC - 1200(c)
1-ISV-67-713	ISTC - 1200(c)
1-ISV-67-714	ISTC - 1200(c)
2-ISV-67-714	ISTC - 1200(c)
1-ISV-67-750	ISTC-1200(c)
2-ISV-67-750	ISTC-1200(c)
2-ISV-67-751	ISTC-1200(c)
1-ISV-67-1009	ISTC-1200(c)
1-ISV-67-1010	ISTC-1200(c)
2-ISV-67-1010	ISTC-1200(c)
2-ISV-67-711	ISTC - 1200(c)
2-RTV-67-831B	ISTC-1200(a)
2-ISV-67-1009	ISTC-1200(c)
2-ISV-67-716A	ISTA-1100
2-ISV-67-713	ISTC - 1200(c)
1-ISV-67-710A	ISTC - 1200(c)
2-ISV-67-710A	ISTA-1100
1-ISV-67-675	ISTC - 1200(c)
2-ISV-67-577A	ISTA-1100
1-TV-67-525A	ISTC-1200(a)
2-TV-67-525A	ISTC-1200(a)
2-RTV-67-831A	ISTC-1200(a)

VALVE ID	EXEMPTION BASIS
1-VTV-67-540	ISTC - 1200(a)
1-VTV-67-541	ISTC - 1200(a)
0-TTV-67-558A	ISTA-1100
0-TTV-67-559A	ISTA-1100
1-TTV-67-687A	ISTA-1100
2-TTV-67-687A	ISTA-1100
2-VTV-67-944A	ISTC - 1200(a)
2-VTV-67-944B	ISTC-1200(a)
0-ISV-67-556A	ISTA-1100
0-TCV-67-1051	ISTC-1200(b)
0-TV-67-889B	ISTC-1200(a)
0-TV-67-889A	ISTC-1200(a)
0-TV-67-890A	ISTC-1200(a)
2-VTV-67-540	ISTC - 1200(a)
1-VTV-67-948	ISTC - 1200(a)
0-FCV-67-151	ISTC-1200(c)
2-VTV-67-541	ISTC - 1200(a)
1-VTV-67-686	ISTC - 1200(a)
2-VTV-67-686	ISTC - 1200(a)
1-VTV-67-923	ISTC - 1200(a)
1-VTV-67-535A	ISTC - 1200(a)
2-VTV-67-535A	ISTC - 1200(a)
2-ISV-67-590A	ISTA-1100
1-ISV-67-531A	ISTA-1100
1-ISV-67-523A	ISTA-1100
1-ISV-67-590A	ISTA-1100
1-TCV-67-158	ISTA-1100
1-TCV-67-115	ISTA-1100
2-TCV-67-115	ISTA-1100
2-SMV-67-549	ISTA-1100
2-ISV-67-523A	ISTA-1100
2-ISV-67-531A	ISTA-1100
2-FCV-67-223	ISTC-1200(c)
2-FCV-67-81	ISTC-1200(c)
1-ISV-67-554A	ISTC-1200(c)

Appendix I - Valves Exempt from the IST Program

VALVE ID	EXEMPTION BASIS	VALVE ID	EXEMPTION BASIS	VALVE ID	EXEMPTION BASIS
2-ISV-67-533A	ISTC - 1200(c)	1-RTV-67-833A	ISTC-1200(a)	2-FCV-67-127	ISTC-1200(c)
2-ISV-67-538A	ISTC - 1200(c)	1-RTV-67-833B	ISTC-1200(a)	1-ISV-67-923A	ISTC-1200(c)
2-FLV-67-927	ISTC - 1200(a)	1-RTV-67-1061	ISTC-1200(a)	1-ISV-67-577A	ISTA-1100
2-ISV-67-551	ISTC - 1200(c)	2-RTV-67-1061	ISTC-1200(a)	1-FCV-67-81	ISTC-1200(c)
2-ISV-67-546	ISTC - 1200(c)	2-RTV-67-1062	ISTC-1200(a)	2-ISV-67-923A	ISTC-1200(c)
0-ISV-67-620B	ISTC-1200(c)	1-TV-67-526A	ISTC-1200(a)	1-FCV-67-458	ISTC-1200(c)
0-ISV-67-553	ISTC-1200(c)	2-TV-67-526A	ISTC-1200(a)	1-FCV-67-223	ISTC-1200(c)
0-ISV-67-591B	ISTC-1200(c)	1-TV-67-676	ISTC-1200(a)	2-ISV-67-554A	ISTC-1200(c)
0-ISV-67-1107	ISTC-1200(c)	1-TV-67-677	ISTC-1200(a)	1-FCV-67-127	ISTC-1200(c)
0-ISV-67-546	ISTC - 1200(c)	1-TV-67-860A	ISTC-1200(a)	2-RTV-67-833A	ISTC-1200(a)
0-ISV-67-528B	ISTC - 1200(c)	2-TV-67-860A	ISTC-1200(a)	2-RTV-67-833B	ISTC-1200(a)
0-DRV-67-1011	ISTC-1200(a)	1-TV-67-860B	ISTC-1200(a)	1-RTV-67-1062	ISTC-1200(a)
0-DRV-67-1012	ISTC-1200(a)	2-TV-67-860B	ISTC-1200(a)	2-ISV-67-687	ISTC-1200(a)
0-DRV-67-547	ISTC-1200(a)	1-TV-67-821A	ISTC-1200(a)	1-ISV-67-687	ISTC-1200(a)
0-DRV-67-548	ISTC-1200(a)	1-TV-67-821B	ISTC-1200(a)	0-ISV-67-1009	ISTC-1200(c)
0-ISV-67-1010	ISTC-1200(c)	1-VTV-67-534A	ISTC - 1200(a)	1-FCV-67-128	ISTC-1200(c)
0-VTV-67-619B	ISTC-1200(a)	2-VTV-67-534A	ISTC - 1200(a)	2-DRV-67-925B	ISTC-1200(a)
0-TV-67-622B	ISTC-1200(a)	1-VTV-67-534B	ISTC - 1200(a)	1-DRV-67-925B	ISTC-1200(a)
0-TV-67-890B	ISTC-1200(a)	2-VTV-67-534B	ISTC - 1200(a)	2-RTV-67-832A	ISTC-1200(a)
0-VTV-67-540	ISTC-1200(a)	2-TV-67-822A	ISTC-1200(a)	1-FCV-67-478	ISTC-1200(c)
0-VTV-67-541	ISTC-1200(a)	2-TV-67-822B	ISTC-1200(a)	1-FCV-67-82	ISTC-1200(c)
0-TV-67-621B	ISTC-1200(a)	1-TV-67-861A	ISTC-1200(a)	2-ISV-67-924B	ISTC-1200(c)
0-RTV-67-1063	ISTC-1200(a)	2-TV-67-861A	ISTC-1200(a)	1-ISV-67-924B	ISTC-1200(c)
0-RTV-67-1064	ISTC-1200(a)	1-TV-67-861B	ISTC-1200(a)	2-FCV-67-128	ISTC-1200(c)
0-RTV-67-830A	ISTC-1200(a)	2-TV-67-861B	ISTC-1200(a)	2-FCV-67-82	ISTC-1200(c)
0-RTV-67-830B	ISTC-1200(a)	2-TV-67-677	ISTC-1200(a)	1-ISV-67-523B	ISTA-1100
0-SMV-67-549	ISTC - 1200(a)	2-TV-67-676	ISTC-1200(a)	1-ISV-67-590B	ISTA-1100
0-VTV-67-624B	ISTC-1200(a)	1-TV-67-526B	ISTC-1200(a)	2-TCV-67-118	ISTA-1100
1-FLV-67-925	ISTC - 1200(a)	2-TV-67-526B	ISTC-1200(a)	2-TCV-67-158	ISTA-1100
1-ISV-67-538B	ISTC - 1200(c)	1-RTV-67-831B	ISTC-1200(a)	1-TCV-67-118	ISTA-1100
1-ISV-67-533B	ISTC - 1200(c)	1-TV-67-525B	ISTC-1200(a)	2-ISV-67-531B	ISTA-1100
1-ISV-67-530B	ISTC - 1200(c)	2-TV-67-525B	ISTC-1200(a)	1-ISV-67-716B	ISTA-1100
1-ISV-67-524B	ISTC - 1200(c)	1-ISV-67-577B	ISTA-1100	2-ISV-67-523B	ISTA-1100
1-DRV-67-779	ISTC-1200(a)	2-ISV-67-577B	ISTA-1100	1-ISV-67-531B	ISTA-1100
1-DRV-67-536B	ISTC-1200(a)	2-ISV-67-590B	ISTC - 1200(c)	1-VTV-67-535B	ISTC - 1200(a)

Appendix I - Valves Exempt from the IST Program

VALVE ID	EXEMPTION BASIS	VALVE ID	EXEMPTION BASIS	VALVE ID	EXEMPTION BASIS
2-FLV-67-925	ISTC - 1200(a)	2-ISV-67-675	ISTC - 1200(c)	2-VTV-67-535B	ISTC - 1200(a)
2-ISV-67-538B	ISTC - 1200(c)	2-ISV-67-554B	ISTC-1200(c)	1-VTV-67-945	ISTC - 1200(a)
2-ISV-67-533B	ISTC - 1200(c)	1-ISV-67-710B	ISTC - 1200(c)	1-VTV-67-947A	ISTC - 1200(a)
2-ISV-67-530B	ISTC - 1200(c)	2-ISV-67-710B	ISTA-1100	0-VTV-67-1111	ISTC-1200(a)
2-ISV-67-524B	ISTC - 1200(c)	2-ISV-67-716B	ISTA-1100	0-TCV-67-1053	ISTC-1200(b)
2-DRV-67-536B	ISTC-1200(a)	1-RTV-67-832A	ISTC-1200(a)	0-ISV-67-556B	ISTA-1100
0-ISV-67-702	ISTC - 1200(c)	1-RTV-67-832B	ISTC-1200(a)	0-CKV-67-703	ISTA-1100
1-DRV-67-545	ISTC-1200(a)	2-RTV-67-832B	ISTC-1200(a)	2-FCV-67-147	ISTC-1200(c)
2-DRV-67-545	ISTC-1200(a)	1-RTV-67-831A	ISTC-1200(a)	1-FCV-67-147	ISTC-1200(c)

Flow Diagram: 0-47W845-5

VALVE ID	EXEMPTION BASIS	VALVE ID	EXEMPTION BASIS	VALVE ID	EXEMPTION BASIS
0-ISV-67-665A	ISTC-1200(c)	0-CKV-67-517A	ISTA-1100	0-RTV-67-986A	ISTC-1200(a)
0-RTV-67-984A	ISTC-1200(a)	0-VTV-67-625B	ISTC-1200(a)	0-RTV-67-987A	ISTC-1200(a)
0-RTV-67-985A	ISTC-1200(a)	0-CKV-67-512A	ISTA-1100	0-ISV-67-510A	ISTA-1100
0-VTV-67-625A	ISTC-1200(a)	0-VTV-67-979	ISTC-1200(a)	0-RFV-67-980	ISTA-1100
0-ISV-67-666A	ISTC-1200(c)	0-DRV-67-514A	ISTA-1100	0-RFV-67-981	ISTA-1100
0-ISV-67-666B	ISTC-1200(c)	0-DRV-67-509A	ISTA-1100	0-RTV-67-825A	ISTC-1200(a)
0-ISV-67-665B	ISTC-1200(c)	0-DRV-82-663	ISTA-1100	0-RTV-67-826A	ISTC-1200(a)
0-ISV-67-511A	ISTC-1200(c)	0-DRV-82-664	ISTA-1100	0-RTV-67-825B	ISTC-1200(a)
0-ISV-67-516A	ISTC-1200(c)	0-ISV-67-515A	ISTA-1100	0-RTV-67-826B	ISTC-1200(a)

Flow Diagram: 0-47W846-2

VALVE ID	EXEMPTION BASIS	VALVE ID	EXEMPTION BASIS	VALVE ID	EXEMPTION BASIS
2-TV-33-221	ISTC - 1200(a)	1-TV-33-222	ISTC - 1200(a)	1-CKV-33-794	ISTA-1100
				2-CKV-33-797	ISTA-1100

Appendix I - Valves Exempt from the IST Program

Flow Diagram: 0-47W848-1

VALVE ID	EXEMPTION BASIS	VALVE ID	EXEMPTION BASIS	VALVE ID	EXEMPTION BASIS
0-ISV-32-632	ISTC - 1200(a)	1-RTV-32-289	ISTB-1200(a)	0-THV-32-70	ISTC-1200skid
0-ISV-32-246	ISTC-1200(c)	1-RTV-32-290	ISTC - 1200(a)	0-CKV-32-70A	ISTC-1200skid
0-ISV-32-252	ISTC-1200(c)	1-ISV-32-291	ISTC - 1200(c)	0-CKV-32-70B	ISTC-1200skid
0-ISV-32-253	ISTC-1200(c)	2-RTV-32-339	ISTB-1200(a)	0-CKV-32-70C	ISTC-1200skid
0-BYV-32-251	ISTC-1200(c)	2-RTV-32-340	ISTC - 1200(a)	0-CKV-32-70D	ISTC-1200skid
0-BYV-32-254	ISTC-1200(c)	2-ISV-32-341	ISTC - 1200(c)	0-THV-32-94	ISTC-1200skid
0-DRV-32-241	ISTC-1200(a)	1-ISV-32-297	ISTC-1200(c)	0-CKV-32-94A	ISTC-1200skid
0-DRV-32-261	ISTC-1200(a)	1-ISV-32-301	ISTC-1200(c)	0-CKV-32-94B	ISTC-1200skid
0-ISV-32-631	ISTC - 1200(a)	0-TV-32-636	ISTC-1200(a)	0-CKV-32-94C	ISTC-1200skid
0-ISV-32-635	ISTC-1200(a)	2-ISV-32-327	ISTC-1200(c)	0-CKV-32-94D	ISTC-1200skid
0-RTV-32-239A	ISTC-1200(a)	2-ISV-32-331	ISTC-1200(c)	0-RTV-32-570A	ISTC-1200(a)
0-RTV-32-255A	ISTC-1200(a)	2-RTV-32-346	ISTC - 1200(a)	0-RTV-32-571A	ISTC-1200(a)
0-RTV-32-257	ISTC-1200(a)	2-RTV-32-326	ISTC - 1200(a)	1-RTV-32-352	ISTC - 1200(a)
0-RTV-32-258A	ISTC-1200(a)	2-RTV-32-329	ISTB-1200(a)	0-CKV-32-240	ISTC-1200skid
0-RTV-32-263	ISTC-1200(a)	2-RTV-32-330	ISTC-1200(a)	0-ISV-32-249	ISTC - 1200(c)
0-RTV-32-263A	ISTC-1200(a)	2-RTV-32-332	ISTC - 1200(a)	0-CKV-32-1316	ISTC-1200skid
0-RTV-32-267A	ISTC-1200(a)	1-RTV-32-299	ISTB-1200(a)	1-RTV-32-296	ISTC-1200(a)
0-RTV-32-271	ISTC-1200(a)	1-RTV-32-300	ISTC-1200(a)	0-RTV-32-244	ISTC-1200(a)
0-RTV-32-282A	ISTC-1200(a)	1-RTV-32-302	ISTC - 1200(a)	0-RTV-32-245	ISTC-1200(a)
0-RTV-32-309A	ISTC-1200(a)	1-RTV-32-306	ISTC-1200(a)	0-FCV-32-73	ISTC-1200skid
0-CKV-32-279	ISTC-1200skid	1-RTV-32-309	ISTB-1200(a)	0-FCV-32-71	ISTC-1200skid
0-DRV-32-281	ISTC-1200(a)	1-RTV-32-310	ISTC - 1200(a)	0-FCV-32-70	ISTC-1200skid
0-DRV-32-285	ISTC-1200(a)	1-RTV-32-312	ISTC - 1200(a)	0-FCV-32-72	ISTC-1200skid
0-BYV-32-265	ISTC-1200(c)	2-RTV-32-316	ISTC - 1200(a)	0-FCV-32-94	ISTC-1200skid
0-BYV-32-266	ISTC-1200(c)	2-RTV-32-319	ISTB-1200(a)	0-FCV-32-97	ISTC-1200skid
0-ISV-32-268	ISTC-1200(c)	2-RTV-32-320	ISTC - 1200(a)	0-FCV-32-95	ISTC-1200skid
0-ISV-32-269	ISTC-1200(c)	2-RTV-32-322	ISTC - 1200(a)	0-FCV-32-96	ISTC-1200skid
0-ISV-32-270	ISTC-1200(c)	0-TV-32-638	ISTC-1200(a)	0-RTV-32-274	ISTC-1200(a)
0-ISV-32-275	ISTC-1200(c)	1-ISV-32-307	ISTC-1200(c)	0-RTV-32-278	ISTC-1200(a)
0-ISV-32-633	ISTC - 1200(a)	1-ISV-32-311	ISTC-1200(c)	2-RTV-32-348	ISTC - 1200(a)
0-ISV-32-634	ISTC - 1200(a)	2-ISV-32-317	ISTC-1200(c)	1-RTV-32-350	ISTC - 1200(a)
0-ISV-32-637	ISTC - 1200(c)	2-ISV-32-321	ISTC-1200(c)	0-CKV-32-1317	ISTC-1200skid

Flow Diagram: 0-47W848-10

Appendix I - Valves Exempt from the IST Program

VALVE ID	EXEMPTION BASIS	VALVE ID	EXEMPTION BASIS	VALVE ID	EXEMPTION BASIS
0-RTV-32-393A	ISTC-1200(a)	0-RTV-32-422A	ISTC-1200(a)	2-TV-32-9216	ISTC-1200(a)
0-RTV-32-393B	ISTC-1200(a)	0-RTV-32-422B	ISTC-1200(a)	2-TV-32-9226	ISTC-1200(a)
0-ISV-32-1510	ISTC-1200(a)	1-ISV-32-1502	ISTC-1200(c)	2-TV-32-9234	ISTC-1200(a)
0-ISV-32-1512	ISTC-1200(a)	2-ISV-32-3790	ISTC-1200(c)	2-TV-32-9235	ISTC-1200(a)
0-RTV-32-1584	ISTC-1200(a)	2-ISV-32-3791	ISTC-1200(c)	2-TV-32-9236	ISTC-1200(a)
0-ISV-32-1485	ISTC-1200(c)	2-ISV-32-3792	ISTC-1200(c)	2-TV-32-9244	ISTC-1200(a)
0-ISV-32-1486	ISTC-1200(c)	2-ISV-32-3793	ISTC-1200(c)	2-TV-32-9245	ISTC-1200(a)
0-RTV-32-1514	ISTC-1200(a)	2-ISV-32-3794	ISTC-1200(c)	2-TV-32-9246	ISTC-1200(a)
0-ISV-32-1580	ISTC-1200(a)	2-ISV-32-3795	ISTC-1200(c)	2-TV-32-9254	ISTC-1200(a)
0-BYV-32-391	ISTC-1200(c)	1-ISV-32-430	ISTC-1200(c)	2-TV-32-9255	ISTC-1200(a)
0-ISV-32-1476	ISTC-1200(c)	1-ISV-32-431	ISTC-1200(c)	2-TV-32-9256	ISTC-1200(a)
0-ISV-32-373	ISTC-1200(c)	1-ISV-32-3802	ISTC-1200(c)	2-TV-32-9264	ISTC-1200(a)
0-ISV-32-3701	ISTC-1200(c)	1-ISV-32-3803	ISTC-1200(c)	2-TV-32-9265	ISTC-1200(a)
0-ISV-32-3709	ISTC-1200(c)	1-ISV-32-433	ISTC-1200(c)	2-TV-32-9266	ISTC-1200(a)
0-ISV-32-370	ISTC-1200(c)	1-ISV-32-3798	ISTC-1200(c)	0-ISV-32-3713	ISTC-1200(c)
0-ISV-32-3710	ISTC-1200(c)	1-ISV-32-3799	ISTC-1200(c)	0-ISV-32-3715	ISTC-1200(c)
0-ISV-32-3711	ISTC-1200(c)	1-ISV-32-3800	ISTC-1200(c)	0-ISV-32-3717	ISTC-1200(c)
0-ISV-32-3712	ISTC-1200(c)	1-ISV-32-3801	ISTC-1200(c)	1-TV-32-9244	ISTC - 1200(a)
0-ISV-32-3714	ISTC-1200(c)	1-ISV-32-434	ISTC-1200(c)	1-TV-32-9245	ISTC - 1200(a)
0-ISV-32-3716	ISTC-1200(c)	1-ISV-32-435	ISTC-1200(c)	1-TV-32-9254	ISTC - 1200(a)
0-ISV-32-3718	ISTC-1200(c)	1-ISV-32-436	ISTC-1200(c)	1-TV-32-9255	ISTC - 1200(a)
0-ISV-32-3719	ISTC-1200(c)	2-ISV-32-450	ISTC-1200(c)	2-ISV-32-3763	ISTC-1200(c)
0-ISV-32-371	ISTC-1200(c)	2-ISV-32-451	ISTC-1200(c)	1-ISV-32-3757	ISTC-1200(c)
0-ISV-32-3720	ISTC-1200(c)	1-ISV-32-452	ISTC-1200(c)	1-ISV-32-3758	ISTC-1200(c)
0-ISV-32-3721	ISTC-1200(c)	2-ISV-32-453	ISTC-1200(c)	1-ISV-32-3759	ISTC-1200(c)
0-ISV-32-3722	ISTC-1200(c)	2-ISV-32-454	ISTC-1200(c)	1-ISV-32-3760	ISTC-1200(c)
0-ISV-32-3723	ISTC-1200(c)	2-ISV-32-456	ISTC-1200(c)	1-ISV-32-3761	ISTC-1200(c)
0-ISV-32-374	ISTC-1200(c)	2-ISV-32-457	ISTC-1200(c)	1-ISV-32-3762	ISTC-1200(c)
0-ISV-32-375	ISTC-1200(c)	2-ISV-32-1572	ISTC-1200(c)	1-ISV-32-3765	ISTC-1200(c)
0-ISV-32-376	ISTC-1200(c)	2-ISV-32-3702	ISTC-1200(c)	1-ISV-32-3766	ISTC-1200(c)
0-ISV-32-3771	ISTC-1200(c)	1-ISV-32-3703	ISTC-1200(c)	1-ISV-32-3769	ISTC-1200(c)
0-ISV-32-3772	ISTC-1200(c)	1-ISV-32-3704	ISTC-1200(c)	1-ISV-32-3770	ISTC-1200(c)
0-ISV-32-3773	ISTC-1200(c)	2-ISV-32-3705	ISTC-1200(c)	1-ISV-32-3830	ISTC-1200(c)
0-ISV-32-3774	ISTC-1200(c)	2-ISV-32-3706	ISTC-1200(c)	1-ISV-32-3831	ISTC-1200(c)
0-ISV-32-377	ISTC-1200(c)	1-ISV-32-3707	ISTC-1200(c)	1-ISV-32-3832	ISTC-1200(c)

Appendix I - Valves Exempt from the IST Program

VALVE ID	EXEMPTION BASIS	VALVE ID	EXEMPTION BASIS	VALVE ID	EXEMPTION BASIS
0-ISV-32-378	ISTC-1200(c)	2-ISV-32-3708	ISTC-1200(c)	1-ISV-32-3833	ISTC-1200(c)
0-ISV-32-379	ISTC-1200(c)	2-ISV-32-3749	ISTC-1200(c)	2-ISV-32-3990	ISTC-1200(c)
0-ISV-32-381	ISTC-1200(c)	2-ISV-32-3750	ISTC-1200(c)	2-ISV-32-3991	ISTC-1200(c)
0-ISV-32-382	ISTC-1200(c)	2-ISV-32-3751	ISTC-1200(c)	2-ISV-32-3992	ISTC-1200(c)
0-ISV-32-383	ISTC-1200(c)	2-ISV-32-3752	ISTC-1200(c)	2-ISV-32-3993	ISTC-1200(c)
0-ISV-32-384	ISTC-1200(c)	2-ISV-32-3753	ISTC-1200(c)	1-ISV-32-9306	ISTC-1200(c)
0-ISV-32-387	ISTC-1200(c)	2-ISV-32-3754	ISTC-1200(c)	1-ISV-32-9308	ISTC-1200(c)
0-ISV-32-388	ISTC-1200(c)	2-ISV-32-3755	ISTC-1200(c)	1-ISV-32-9310	ISTC-1200(c)
0-ISV-32-389	ISTC-1200(c)	2-ISV-32-3756	ISTC-1200(c)	1-ISV-32-9312	ISTC-1200(c)
0-ISV-32-390	ISTC-1200(c)	2-ISV-32-3767	ISTC-1200(c)	1-TV-32-9274	ISTC - 1200(a)
0-ISV-32-392	ISTC-1200(c)	2-ISV-32-3768	ISTC-1200(c)	1-TV-32-9275	ISTC - 1200(a)
0-ISV-32-4002	ISTC-1200(c)	2-ISV-32-3775	ISTC-1200(c)	1-TV-32-9311	ISTC - 1200(a)
0-ISV-32-4003	ISTC-1200(c)	2-ISV-32-3776	ISTC-1200(c)	1-TV-32-9313	ISTC - 1200(a)
0-ISV-32-400	ISTC-1200(c)	2-ISV-32-3777	ISTC-1200(c)	1-TV-32-9307	ISTC - 1200(a)
0-ISV-32-402	ISTC-1200(c)	2-ISV-32-3778	ISTC-1200(c)	0-ISV-32-460	ISTC - 1200(c)
0-ISV-32-403	ISTC-1200(c)	2-ISV-32-3780	ISTC-1200(c)	0-ISV-32-385	ISTC-1200(c)
0-ISV-32-404	ISTC-1200(c)	2-ISV-32-3781	ISTC-1200(c)	1-ISV-32-9298	ISTC-1200(c)
0-ISV-32-405	ISTC-1200(c)	2-ISV-32-3724	ISTC-1200(c)	0-ISV-32-3731	ISTC-1200(c)
0-ISV-32-406	ISTC-1200(c)	2-ISV-32-3725	ISTC-1200(c)	0-ISV-32-3739	ISTC-1200(c)
0-ISV-32-408	ISTC-1200(c)	2-ISV-32-3726	ISTC-1200(c)	1-TV-32-9284	ISTC - 1200(a)
0-ISV-32-409	ISTC-1200(c)	2-ISV-32-3727	ISTC-1200(c)	1-TV-32-9285	ISTC - 1200(a)
0-ISV-32-410	ISTC-1200(c)	2-ISV-32-3728	ISTC-1200(c)	1-TV-32-9299	ISTC - 1200(a)
0-ISV-32-411	ISTC-1200(c)	2-ISV-32-3729	ISTC-1200(c)	1-TV-32-9301	ISTC - 1200(a)
0-ISV-32-412	ISTC-1200(c)	2-ISV-32-3732	ISTC-1200(c)	1-TV-32-9303	ISTC - 1200(a)
0-ISV-32-413	ISTC-1200(c)	2-ISV-32-3733	ISTC-1200(c)	1-TV-32-9305	ISTC - 1200(a)
0-ISV-32-415	ISTC-1200(c)	2-ISV-32-1573	ISTC-1200(c)	1-TV-32-9234	ISTC - 1200(a)
0-ISV-32-416	ISTC-1200(c)	2-ISV-32-3678	ISTC-1200(c)	1-TV-32-9235	ISTC - 1200(a)
0-ISV-32-417	ISTC-1200(c)	1-ISV-32-3679	ISTC-1200(c)	2-ISV-32-3994	ISTC-1200(c)
0-ISV-32-418	ISTC-1200(c)	2-ISV-32-3680	ISTC-1200(c)	2-ISV-32-3995	ISTC-1200(c)
0-ISV-32-419	ISTC-1200(c)	1-ISV-32-3681	ISTC-1200(c)	2-ISV-32-3996	ISTC-1200(c)
0-ISV-32-421	ISTC-1200(c)	1-ISV-32-3682	ISTC-1200(c)	2-ISV-32-3997	ISTC-1200(c)
0-ISV-32-450	ISTC-1200(c)	2-ISV-32-3683	ISTC-1200(c)	2-ISV-32-3998	ISTC-1200(c)
0-RTV-32-1513	ISTC-1200(a)	1-ISV-32-3685	ISTC-1200(c)	2-ISV-32-3999	ISTC-1200(c)
0-ISV-32-3730	ISTC-1200(c)	2-ISV-32-3687	ISTC-1200(c)	1-ISV-32-9300	ISTC-1200(c)
0-ISV-32-3734	ISTC-1200(c)	2-ISV-32-3688	ISTC-1200(c)	1-ISV-32-9302	ISTC-1200(c)

Appendix I - Valves Exempt from the IST Program

VALVE ID	EXEMPTION BASIS
0-ISV-32-3740	ISTC-1200(c)
0-ISV-32-3741	ISTC-1200(c)
0-ISV-32-3742	ISTC-1200(c)
0-ISV-32-3743	ISTC-1200(c)
0-ISV-32-3744	ISTC-1200(c)
0-ISV-32-1478	ISTC-1200(c)
0-ISV-32-1484	ISTC-1200(c)
0-BYV-32-420	ISTC-1200(c)
0-ISV-32-1582	ISTC-1200(a)
0-ISV-32-3675	ISTC-1200(c)
0-ISV-32-3684	ISTC-1200(c)
0-ISV-32-3686	ISTC-1200(c)
0-ISV-32-3694	ISTC-1200(c)
0-ISV-32-3695	ISTC-1200(c)
0-ISV-32-3696	ISTC-1200(c)
0-ISV-32-3697	ISTC-1200(c)
0-ISV-32-3698	ISTC-1200(c)
0-ISV-32-3699	ISTC-1200(c)
0-ISV-32-3700	ISTC-1200(c)
0-RTV-32-1583	ISTC-1200(a)
0-ISV-32-1487	ISTC-1200(c)

VALVE ID	EXEMPTION BASIS
2-ISV-32-3689	ISTC-1200(c)
2-ISV-32-3690	ISTC-1200(c)
2-ISV-32-3691	ISTC-1200(c)
2-ISV-32-3692	ISTC-1200(c)
2-ISV-32-460	ISTC-1200(c)
2-ISV-32-461	ISTC-1200(c)
1-ISV-32-462	ISTC-1200(c)
2-ISV-32-463	ISTC-1200(c)
2-ISV-32-464	ISTC-1200(c)
2-ISV-32-465	ISTC-1200(c)
1-ISV-32-1480	ISTA-1100
2-ISV-32-1481	ISTC-1200(c)
1-ISV-32-1483	ISTC-1200(c)
1-ISV-32-440	ISTC-1200(c)
1-ISV-32-441	ISTC-1200(c)
1-ISV-32-443	ISTC-1200(c)
1-ISV-32-444	ISTC-1200(c)
1-ISV-32-445	ISTC-1200(c)
1-ISV-32-3735	ISTC-1200(c)
1-ISV-32-3736	ISTC-1200(c)
1-ISV-32-3745	ISTC-1200(c)
1-ISV-32-1503	ISTC-1200(c)

VALVE ID	EXEMPTION BASIS
1-ISV-32-9304	ISTC-1200(c)
1-ISV-32-3834	ISTC-1200(c)
1-ISV-32-3835	ISTC-1200(c)
1-ISV-32-3836	ISTC-1200(c)
1-ISV-32-3837	ISTC-1200(c)
1-ISV-32-3838	ISTC-1200(c)
1-ISV-32-3839	ISTC-1200(c)
1-ISV-32-3746	ISTC-1200(c)
1-ISV-32-3747	ISTC-1200(c)
1-ISV-32-3748	ISTC-1200(c)
1-ISV-32-3783	ISTC-1200(c)
1-ISV-32-3784	ISTC-1200(c)
1-ISV-32-3785	ISTC-1200(c)
1-ISV-32-3786	ISTC-1200(c)
1-ISV-32-3787	ISTC-1200(c)
1-ISV-32-3788	ISTC-1200(c)
1-ISV-32-3789	ISTC-1200(c)
1-ISV-32-3737	ISTC-1200(c)
1-ISV-32-3738	ISTC-1200(c)
1-TV-32-9309	ISTC-1200(a)
1-TV-32-9264	ISTC - 1200(a)
1-TV-32-9265	ISTC - 1200(a)

Appendix I - Valves Exempt from the IST Program

Flow Diagram: 0-47W850-2

VALVE ID	EXEMPTION BASIS
0-RTV-26-313A	ISTA-1100
0-RTV-26-315A	ISTA-1100
0-RTV-26-316A	ISTA-1100
0-RTV-26-317A	ISTA-1100
0-RTV-26-318A	ISTA-1100
0-RTV-26-319A	ISTA-1100
0-RTV-26-578A	ISTA-1100
0-RTV-26-579A	ISTA-1100
0-ISV-26-645	ISTC - 1200(c)
0-ISV-26-648	ISTC - 1200(c)
0-FLV-26-683	ISTC - 1200(c)

VALVE ID	EXEMPTION BASIS
0-RTV-26-612A	ISTA-1100
0-RTV-26-613A	ISTA-1100
0-RTV-26-614A	ISTA-1100
0-RTV-26-615A	ISTA-1100
0-RTV-26-633A	ISTA-1100
1-VTV-26-636	ISTC - 1200(a)
2-VTV-26-642	ISTC - 1200(a)
1-ISV-26-653	ISTC - 1200(c)
2-ISV-26-653	ISTC - 1200(c)
2-ISV-26-688	ISTC - 1200(c)
0-RTV-26-870A	ISTA-1100
0-VTV-26-1745	ISTC - 1200(a)

VALVE ID	EXEMPTION BASIS
0-FCV-26-15	ISTA-1100
0-FCV-26-16	ISTA-1100
0-ISV-26-1350	ISTA-1100
0-ISV-26-1351	ISTA-1100
0-ISV-26-1352	ISTA-1100
0-ISV-26-1354	ISTA-1100
1-ISV-26-1475A	ISTA-1100
2-ISV-26-1475A	ISTA-1100
2-ISV-26-1476B	ISTA-1100
1-ISV-26-1476B	ISTA-1100
0-FCV-26-126	ISTA-1100
0-FCV-26-127	ISTA-1100

Flow Diagram: 0-47W855-1

VALVE ID	EXEMPTION BASIS
0-DRV-78-505	ISTA-1100
0-DRV-78-561	ISTA-1100
0-DRV-78-503	ISTA-1100
0-DRV-78-557	ISTA-1100
0-ISV-78-517	ISTA-1100
0-ISV-78-518	ISTA-1100
0-DRV-78-558	ISTA-1100
0-DRV-78-504	ISTA-1100
0-DRV-78-566	ISTA-1100
0-DRV-78-506	ISTA-1100
0-DRV-78-584	ISTA-1100
0-DRV-78-585	ISTA-1100
0-DRV-78-592	ISTA-1100
0-ISV-78-514	ISTA-1100
0-ISV-78-516	ISTA-1100
0-ISV-78-587	ISTA-1100
0-ISV-78-588	ISTA-1100

VALVE ID	EXEMPTION BASIS
0-VTV-78-595	ISTA-1100
0-VTV-78-567	ISTA-1100
0-RTV-78-205A	ISTA-1100
0-RTV-78-206A	ISTA-1100
0-TV-78-221A	ISTA-1100
0-VTV-78-559	ISTA-1100
0-VTV-78-560	ISTA-1100
0-RTV-78-203A	ISTA-1100
0-RTV-78-204A	ISTA-1100
0-TV-78-222A	ISTA-1100
0-VTV-78-508	ISTA-1100
0-VTV-78-591	ISTA-1100
0-VTV-78-593	ISTA-1100
0-VTV-78-594	ISTA-1100
0-VTV-78-583	ISTA-1100
0-ISV-78-590	ISTA-1100
0-RTV-78-223A	ISTA-1100
0-RTV-78-224A	ISTA-1100

VALVE ID	EXEMPTION BASIS
1-TV-78-226A	ISTC - 1200(a)
2-TV-78-226A	ISTC - 1200(a)
1-TV-78-228A	ISTC - 1200(a)
2-TV-78-228A	ISTC - 1200(a)
0-THV-78-511	ISTA-1100
0-THV-78-512	ISTA-1100
0-ISV-78-513	ISTA-1100
0-THV-78-515	ISTA-1100
0-CKV-78-509	ISTA-1100
0-ISV-78-501	ISTA-1100
0-VTV-78-599	ISTA-1100
0-VTV-78-507	ISTA-1100
0-ISV-78-502	ISTA-1100
0-CKV-78-510	ISTA-1100
0-VTV-78-598	ISTA-1100
0-ISV-78-581	ISTA-1100
0-ISV-78-582	ISTA-1100
0-CKV-78-586	ISTA-1100

Appendix I - Valves Exempt from the IST Program

Flow Diagram: 0-47W856-1

VALVE ID	EXEMPTION BASIS
1-DRV-59-725	ISTC-1200(a)

VALVE ID	EXEMPTION BASIS
1-TV-59-680	ISTC - 1200(a)
2-DRV-59-725	ISTC-1200(a)

VALVE ID	EXEMPTION BASIS
2-TV-59-680	ISTC - 1200(a)
1-TV-59-681	ISTC - 1200(a)

Flow Diagram: 0-47W859-1

VALVE ID	EXEMPTION BASIS
2-DRV-70-73	ISTC-1200(a)
0-RTV-70-252	ISTC-1200(a)
0-RTV-70-257	ISTC-1200(a)
0-RTV-70-358	ISTC-1200(a)
0-RTV-70-359	ISTC-1200(a)
0-RTV-70-360	ISTC-1200(a)
0-RTV-70-361	ISTC-1200(a)
0-RTV-70-364	ISTC-1200(a)
1-ISV-70-501	ISTC-1200(c)
2-ISV-70-501	ISTC-1200(c)
0-ISV-70-503	ISTC-1200(c)
1-ISV-70-503B	ISTC-1200(c)
0-ISV-70-505	ISTC-1200(c)
1-ISV-70-505B	ISTC-1200(c)
0-VTV-70-506	ISTC-1200(a)
1-BYV-70-508	ISTC-1200(c)
2-BYV-70-508	ISTC-1200(c)
1-ISV-70-516	ISTC-1200(c)
2-ISV-70-516	ISTC-1200(c)
1-ISV-70-518	ISTC - 1200(c)
2-ISV-70-518	ISTC - 1200(c)
1-ISV-70-520	ISTC - 1200(c)
2-ISV-70-520	ISTC - 1200(c)
1-ISV-70-522	ISTA-1100
2-ISV-70-522	ISTA-1100
0-DRV-70-523A	ISTC-1200(a)
0-DRV-70-523B	ISTC-1200(a)
0-VTV-70-525A	ISTC-1200(a)
0-VTV-70-525B	ISTC-1200(a)

VALVE ID	EXEMPTION BASIS
1-RTV-70-251A	ISTC - 1200(a)
1-RTV-70-284A	ISTC-1200(a)
2-RTV-70-284A	ISTC-1200(a)
1-RTV-70-285A	ISTC-1200(a)
2-RTV-70-285A	ISTC-1200(a)
1-RTV-70-286A	ISTC - 1200(a)
2-RTV-70-286A	ISTC - 1200(a)
1-RTV-70-287A	ISTC - 1200(a)
2-RTV-70-287A	ISTC - 1200(a)
1-RTV-70-288A	ISTC - 1200(a)
2-RTV-70-288A	ISTC - 1200(a)
1-RTV-70-289A	ISTC - 1200(a)
2-RTV-70-289A	ISTC - 1200(a)
1-RTV-70-290A	ISTC - 1200(a)
2-RTV-70-290A	ISTC - 1200(a)
1-RTV-70-291A	ISTC - 1200(a)
2-RTV-70-291A	ISTC - 1200(a)
1-RTV-70-363A	ISTC - 1200(a)
2-RTV-70-367A	ISTC - 1200(a)
2-RTV-70-368A	ISTC - 1200(a)
1-VTV-70-506B	ISTC - 1200(a)
1-VTV-70-517	ISTC - 1200(a)
2-VTV-70-517	ISTC - 1200(a)
1-THV-70-519	ISTC - 1200(c)
2-THV-70-519	ISTC - 1200(c)
1-VTV-70-590	ISTC - 1200(a)
2-VTV-70-590	ISTC - 1200(a)
2-VTV-70-663	ISTC - 1200(a)
1-TV-70-717B	ISTC - 1200(a)

VALVE ID	EXEMPTION BASIS
2-FCV-70-3	ISTC-1200(c)
0-ISV-70-206	ISTC-1200(a)
1-RTV-70-340A	ISTC - 1200(a)
1-RTV-70-341A	ISTC - 1200(a)
0-ISV-70-524A	ISTA-1100
0-ISV-70-524B	ISTA-1100
1-BYV-70-537	ISTC-1200(c)
0-DRV-70-720	ISTC-1200(a)
0-DRV-70-721	ISTC-1200(a)
0-CKV-70-753	ISTA-1100
1-ISV-70-808A	ISTC - 1200(a)
2-ISV-70-808A	ISTC - 1200(a)
1-VTV-70-809A	ISTC - 1200(a)
2-VTV-70-809A	ISTC - 1200(a)
1-ISV-70-810A	ISTC - 1200(a)
2-ISV-70-810A	ISTC - 1200(a)
1-VTV-70-811A	ISTC - 1200(a)
2-VTV-70-811A	ISTC - 1200(a)
1-ISV-70-812B	ISTC - 1200(a)
2-ISV-70-812B	ISTC - 1200(a)
1-VTV-70-813B	ISTC - 1200(a)
2-VTV-70-813B	ISTC - 1200(a)
1-ISV-70-814B	ISTC - 1200(a)
2-ISV-70-814B	ISTC - 1200(a)
2-VTV-70-815B	ISTC - 1200(a)
1-VTV-70-815B	ISTC - 1200(a)
0-ISV-70-816	ISTC - 1200(a)
0-VTV-70-817	ISTC - 1200(a)
0-ISV-70-818	ISTC - 1200(a)

Appendix I - Valves Exempt from the IST Program

VALVE ID	EXEMPTION BASIS
0-DRV-70-526A	ISTC-1200(a)
0-DRV-70-526B	ISTC-1200(a)
0-DRV-70-528A	ISTC-1200(a)
0-DRV-70-528B	ISTC-1200(a)
0-ISV-70-529A	ISTA-1100
0-ISV-70-529B	ISTA-1100
0-THV-70-530A	ISTC - 1200(c)
0-THV-70-530B	ISTC - 1200(c)
2-BYV-70-537	ISTC-1200(c)
0-DRV-70-597	ISTC-1200(a)
0-VTV-70-718	ISTC-1200(a)
0-VTV-70-764	ISTC-1200(a)
0-DRV-70-765	ISTC-1200(a)
1-DRV-70-513	ISTC-1200(a)
1-ISV-70-544C	ISTC-1200(c)
1-FCV-70-4	ISTC-1200(c)
1-ISV-70-503A	ISTC-1200(c)
1-DRV-70-509	ISTC-1200(a)
1-DRV-70-511A	ISTC-1200(a)
1-DRV-70-511B	ISTC-1200(a)
2-DRV-70-511B	ISTC-1200(a)
1-DRV-70-597	ISTC-1200(a)
1-ISV-70-505A	ISTC-1200(c)
1-ISV-70-507	ISTC-1200(c)
2-FCV-70-4	ISTC-1200(c)
2-FCV-70-2	ISTC-1200(c)
2-ISV-70-503A	ISTC-1200(c)
2-DRV-70-509	ISTC-1200(a)
2-DRV-70-511A	ISTC-1200(a)
2-DRV-70-513	ISTC-1200(a)
2-DRV-70-597	ISTC-1200(a)
2-ISV-70-544C	ISTC-1200(c)
2-ISV-70-505A	ISTC-1200(c)
2-ISV-70-507	ISTC-1200(c)
0-VTV-70-512A	ISTC-1200(a)

VALVE ID	EXEMPTION BASIS
1-VTV-70-718B	ISTC - 1200(a)
2-VTV-70-506A	ISTC - 1200(a)
1-TV-70-717A	ISTC - 1200(a)
2-TV-70-717A	ISTC - 1200(a)
1-VTV-70-718A	ISTC - 1200(a)
2-VTV-70-718A	ISTC - 1200(a)
1-VTV-70-512A	ISTC - 1200(a)
2-VTV-70-512A	ISTC - 1200(a)
1-VTV-70-512B	ISTC - 1200(a)
2-VTV-70-512B	ISTC - 1200(a)
1-VTV-70-514	ISTC - 1200(a)
2-VTV-70-514	ISTC - 1200(a)
1-RTV-70-250A	ISTC - 1200(a)
1-RTV-70-362A	ISTC - 1200(a)
2-RTV-70-366A	ISTC - 1200(a)
1-RTV-70-371A	ISTC - 1200(a)
1-RTV-70-372A	ISTC - 1200(a)
1-SMV-70-715	ISTC - 1200(c)
2-SMV-70-715	ISTC - 1200(c)
1-SMV-70-716	ISTC - 1200(c)
2-SMV-70-716	ISTC - 1200(c)
1-RTV-70-354A	ISTC - 1200(a)
2-RTV-70-354A	ISTC - 1200(a)
1-RTV-70-355A	ISTC - 1200(a)
2-RTV-70-355A	ISTC - 1200(a)
2-RTV-70-254A	ISTC - 1200(a)
1-RTV-70-255A	ISTC - 1200(a)
2-RTV-70-256A	ISTC - 1200(a)
1-RTV-70-257A	ISTC-1200(a)
2-RTV-70-257A	ISTC-1200(a)
1-RTV-70-258A	ISTC - 1200(a)
2-RTV-70-258A	ISTC - 1200(a)
1-RTV-70-259A	ISTC - 1200(a)
2-RTV-70-259A	ISTC - 1200(a)
1-RTV-70-260A	ISTC - 1200(a)

VALVE ID	EXEMPTION BASIS
0-VTV-70-819	ISTC - 1200(a)
1-ISV-70-1501A	ISTC-1200(a)
1-ISV-70-1501B	ISTC-1200(a)
0-ISV-70-1503A	ISTC-1200(a)
0-ISV-70-1503B	ISTC-1200(a)
2-ISV-70-1504A	ISTC-1200(a)
2-ISV-70-1504B	ISTC-1200(a)
1-ISV-70-510	ISTC-1200(c)
2-ISV-70-510	ISTC-1200(c)
1-FCV-70-10	ISTC-1200(c)
1-DRV-70-721A	ISTC-1200(a)
2-DRV-70-720A	ISTC-1200(a)
1-FCV-70-8	ISTC-1200(c)
2-FCV-70-15	ISTC-1200(c)
1-FCV-70-25	ISTC-1200(c)
2-FCV-70-16	ISTC-1200(c)
1-FCV-70-23	ISTC-1200(c)
2-FCV-70-18	ISTC-1200(c)
1-FCV-70-2	ISTC-1200(c)
1-VTV-70-506A	ISTC-1200(a)
2-DRV-70-721A	ISTC-1200(a)
1-DRV-70-720A	ISTC-1200(a)
2-DRV-70-721B	ISTC-1200(a)
1-DRV-70-721B	ISTC-1200(a)
0-ISV-70-510	ISTC-1200(c)
2-FCV-70-75	ISTC-1200(c)
2-FCV-70-39	ISTC-1200(c)
1-FCV-70-3	ISTC-1200(c)
1-FCV-70-34	ISTC-1200(c)
1-FCV-70-75	ISTC-1200(c)
2-FCV-70-28	ISTC-1200(c)
2-FCV-70-29	ISTC-1200(c)
1-FCV-70-26	ISTC-1200(c)
1-FCV-70-27	ISTC-1200(c)
2-FCV-70-14	ISTC-1200(c)

Appendix I - Valves Exempt from the IST Program

VALVE ID	EXEMPTION BASIS
0-VTV-70-512B	ISTC-1200(a)
0-VTV-70-514	ISTC-1200(a)
0-DRV-70-509	ISTC-1200(a)
0-DRV-70-511A	ISTC-1200(a)
0-DRV-70-511B	ISTC-1200(a)
0-DRV-70-513	ISTC-1200(a)
0-RTV-70-369A	ISTC-1200(a)
0-RTV-70-370A	ISTC-1200(a)
0-RTV-70-431A	ISTC-1200(a)
0-SMV-70-715	ISTC - 1200(c)
0-SMV-70-716	ISTC - 1200(c)
0-TV-70-717	ISTC - 1200(a)
1-ISV-70-544B	ISTC-1200(c)
2-DRV-70-787	ISTC-1200(a)
2-ISV-70-544B	ISTC-1200(c)
2-ISV-70-503B	ISTC-1200(c)
2-ISV-70-505B	ISTC-1200(c)

VALVE ID	EXEMPTION BASIS
2-RTV-70-260A	ISTC - 1200(a)
1-RTV-70-271A	ISTC - 1200(a)
2-RTV-70-271A	ISTC - 1200(a)
1-RTV-70-272A	ISTC - 1200(a)
2-RTV-70-272A	ISTC - 1200(a)
1-RTV-70-273A	ISTC - 1200(a)
2-RTV-70-273A	ISTC - 1200(a)
1-RTV-70-356A	ISTC - 1200(a)
2-RTV-70-356A	ISTC - 1200(a)
1-RTV-70-357A	ISTC - 1200(a)
2-RTV-70-357A	ISTC - 1200(a)
1-ISV-70-544A	ISTC-1200(c)
2-ISV-70-544A	ISTC-1200(c)
2-RTV-70-365A	ISTC - 1200(a)
2-RTV-70-253A	ISTC - 1200(a)
2-TV-70-717B	ISTC - 1200(a)
2-VTV-70-506B	ISTC - 1200(a)

VALVE ID	EXEMPTION BASIS
0-FCV-70-22	ISTC-1200(c)
1-FCV-70-13	ISTC-1200(c)
2-DRV-70-720B	ISTC-1200(a)
1-DRV-70-720B	ISTC-1200(a)
2-FCV-70-196	ISTC-1200(c)
1-FCV-70-9	ISTC-1200(c)
1-FCV-70-74	ISTC-1200(c)
2-FCV-70-78	ISTC-1200(c)
1-FCV-70-207	ISTC-1200(c)
0-FCV-70-12	ISTC-1200(c)
2-FCV-70-76	ISTC-1200(c)
1-FCV-70-64	ISTC-1200(c)
2-VTV-70-718B	ISTC - 1200(a)
1-ISV-70-540	ISTC - 1200(c)
1-ISV-70-543	ISTC - 1200(c)
2-ISV-70-540	ISTC - 1200(c)
2-ISV-70-543	ISTC - 1200(c)

Flow Diagram: 0-47W859-2

VALVE ID	EXEMPTION BASIS
0-FCV-70-111	ISTA-1100

Flow Diagram: 0-47W859-4

VALVE ID	EXEMPTION BASIS
1-DRV-70-782A	ISTC-1200(a)
2-DRV-70-782A	ISTC - 1200(a)
1-ISV-70-553A	ISTC - 1200(c)
1-DRV-70-548A	ISTC-1200(a)
1-DRV-70-549A	ISTC-1200(a)
1-DRV-70-563A	ISTC-1200(a)
1-DRV-70-568A	ISTC-1200(a)
1-ISV-70-552A	ISTC - 1200(c)
1-ISV-70-557A	ISTC - 1200(c)
1-ISV-70-558A	ISTC - 1200(c)
1-ISV-70-562A	ISTC - 1200(c)
1-ISV-70-567A	ISTC - 1200(c)

VALVE ID	EXEMPTION BASIS
1-ISV-70-798	ISTC - 1200(c)
2-ISV-70-798	ISTC - 1200(c)
1-ISV-70-799	ISTC - 1200(c)
2-ISV-70-799	ISTC - 1200(c)
1-ISV-70-800	ISTC - 1200(c)
2-ISV-70-800	ISTC - 1200(c)
1-ISV-70-801	ISTC - 1200(c)
2-ISV-70-801	ISTC - 1200(c)
1-RTV-70-261A	ISTC - 1200(a)
2-RTV-70-261A	ISTC - 1200(a)
1-RTV-70-262A	ISTC - 1200(a)
2-RTV-70-262A	ISTC - 1200(a)

VALVE ID	EXEMPTION BASIS
1-THV-70-566A	ISTC - 1200(c)
2-THV-70-566A	ISTC - 1200(c)
1-THV-70-571A	ISTC - 1200(c)
2-THV-70-571A	ISTC - 1200(c)
1-THV-70-590A	ISTC - 1200(c)
2-THV-70-590A	ISTC - 1200(c)
1-VTV-70-547A	ISTC - 1200(a)
2-VTV-70-547A	ISTC - 1200(a)
1-VTV-70-550A	ISTC - 1200(a)
2-VTV-70-550A	ISTC - 1200(a)
1-VTV-70-555A	ISTC - 1200(a)
2-VTV-70-555A	ISTC - 1200(a)

Appendix I - Valves Exempt from the IST Program

VALVE ID	EXEMPTION BASIS
1-ISV-70-569A	ISTC - 1200(c)
1-ISV-70-564A	ISTC - 1200(c)
2-ISV-70-553A	ISTC - 1200(c)
2-THV-70-554A	ISTC - 1200(c)
2-DRV-70-548A	ISTC-1200(a)
2-DRV-70-549A	ISTC-1200(a)
2-DRV-70-563A	ISTC-1200(a)
2-DRV-70-568A	ISTC-1200(a)
2-ISV-70-552A	ISTC - 1200(c)
2-ISV-70-557A	ISTC - 1200(c)
2-ISV-70-558A	ISTC - 1200(c)
2-ISV-70-562A	ISTC - 1200(c)
2-ISV-70-567A	ISTC - 1200(c)
2-ISV-70-569A	ISTC - 1200(c)
2-ISV-70-564A	ISTC - 1200(c)
1-ISV-70-564B	ISTC - 1200(c)
1-ISV-70-567B	ISTC - 1200(c)
1-ISV-70-562B	ISTC - 1200(c)
1-ISV-70-558B	ISTC - 1200(c)
1-ISV-70-557B	ISTC - 1200(c)
1-ISV-70-552B	ISTC - 1200(c)
1-ISV-70-553B	ISTC - 1200(c)
1-DRV-70-568B	ISTC-1200(a)
1-DRV-70-549B	ISTC-1200(a)
1-DRV-70-548B	ISTC-1200(a)
2-ISV-70-567B	ISTC - 1200(c)
2-ISV-70-562B	ISTC - 1200(c)
2-ISV-70-558B	ISTC - 1200(c)
2-ISV-70-557B	ISTC - 1200(c)
2-ISV-70-552B	ISTC - 1200(c)
2-DRV-70-568B	ISTC-1200(a)
2-ISV-70-553B	ISTC - 1200(c)
2-DRV-70-563B	ISTC-1200(a)
2-DRV-70-549B	ISTC-1200(a)
2-DRV-70-548B	ISTC-1200(a)

VALVE ID	EXEMPTION BASIS
1-RTV-70-263A	ISTC - 1200(a)
2-RTV-70-263A	ISTC - 1200(a)
1-RTV-70-264A	ISTC - 1200(a)
2-RTV-70-264A	ISTC - 1200(a)
1-RTV-70-265A	ISTC - 1200(a)
2-RTV-70-265A	ISTC - 1200(a)
1-RTV-70-266A	ISTC - 1200(a)
2-RTV-70-266A	ISTC - 1200(a)
1-RTV-70-267A	ISTC - 1200(a)
2-RTV-70-267A	ISTC - 1200(a)
1-RTV-70-268A	ISTC - 1200(a)
2-RTV-70-268A	ISTC - 1200(a)
1-RTV-70-269A	ISTC - 1200(a)
2-RTV-70-269A	ISTC - 1200(a)
1-RTV-70-270A	ISTC - 1200(a)
2-RTV-70-270A	ISTC - 1200(a)
1-ISV-70-572A	ISTC - 1200(c)
2-ISV-70-572A	ISTC - 1200(c)
1-ISV-70-725A	ISTC - 1200(c)
2-ISV-70-725A	ISTC - 1200(c)
2-ISV-70-725B	ISTC - 1200(c)
1-ISV-70-725B	ISTC - 1200(c)
1-ISV-70-572B	ISTC - 1200(c)
2-ISV-70-572B	ISTC - 1200(c)
1-ISV-70-569B	ISTC - 1200(c)
2-ISV-70-569B	ISTC - 1200(c)
1-RTV-70-274A	ISTC-1200(a)
2-RTV-70-274A	ISTC-1200(a)
1-RTV-70-275A	ISTC - 1200(a)
2-RTV-70-275A	ISTC - 1200(a)
1-RTV-70-276A	ISTC-1200(a)
2-RTV-70-276A	ISTC-1200(a)
1-RTV-70-277A	ISTC - 1200(a)
2-RTV-70-277A	ISTC - 1200(a)
1-RTV-70-278A	ISTC-1200(a)

VALVE ID	EXEMPTION BASIS
1-ISV-70-545A	ISTC - 1200(c)
2-ISV-70-545A	ISTC - 1200(c)
1-THV-70-554A	ISTC-1200(b)
1-THV-70-546A	ISTC-1200(b)
2-THV-70-546A	ISTC-1200(b)
2-ISV-70-564B	ISTC-1200(c)
1-THV-70-546B	ISTC-1200(b)
1-ISV-70-545B	ISTC - 1200(c)
2-ISV-70-545B	ISTC - 1200(c)
1-DRV-70-563B	ISTC-1200(a)
1-VTV-70-555B	ISTC - 1200(a)
2-VTV-70-555B	ISTC - 1200(a)
1-VTV-70-550B	ISTC - 1200(a)
2-VTV-70-550B	ISTC - 1200(a)
1-VTV-70-547B	ISTC - 1200(a)
2-VTV-70-547B	ISTC - 1200(a)
1-THV-70-590B	ISTC - 1200(c)
2-THV-70-590B	ISTC - 1200(c)
1-THV-70-571B	ISTC - 1200(c)
2-THV-70-571B	ISTC - 1200(c)
1-THV-70-566B	ISTC - 1200(c)
2-THV-70-566B	ISTC - 1200(c)
2-RTV-70-278A	ISTC-1200(a)
1-RTV-70-279A	ISTC - 1200(a)
2-RTV-70-279A	ISTC - 1200(a)
1-RTV-70-280A	ISTC - 1200(a)
2-RTV-70-280A	ISTC - 1200(a)
1-RTV-70-281A	ISTC-1200(a)
2-RTV-70-281A	ISTC-1200(a)
1-RTV-70-282A	ISTC - 1200(a)
2-RTV-70-282A	ISTC - 1200(a)
1-RTV-70-283A	ISTC - 1200(a)
2-RTV-70-283A	ISTC - 1200(a)
2-THV-70-546B	ISTC - 1200(c)
1-THV-70-554B	ISTC - 1200(c)

Appendix I - Valves Exempt from the IST Program

VALVE ID	EXEMPTION BASIS
2-THV-70-554B	ISTC - 1200(c)

Flow Diagram: 1-47W600-161A

VALVE ID	EXEMPTION BASIS
1-ISIV-82-5064A	ISTC-1200(a)
2-ISIV-82-5064A	ISTC-1200(a)
1-ISIV-82-5064B	ISTC-1200(a)
2-ISIV-82-5064B	ISTC-1200(a)
1-ISIV-82-5065A	ISTC-1200(a)
2-ISIV-82-5065A	ISTC-1200(a)
1-ISIV-82-5065B	ISTC-1200(a)
2-ISIV-82-5065B	ISTC-1200(a)
1-ISIV-82-5066A	ISTC-1200(a)
2-ISIV-82-5066A	ISTC-1200(a)
1-ISIV-82-5066B	ISTC-1200(a)
2-ISIV-82-5066B	ISTC-1200(a)
1-ISIV-82-5067A	ISTC-1200(a)
2-ISIV-82-5067A	ISTC-1200(a)
1-ISIV-82-5067B	ISTC-1200(a)
2-ISIV-82-5067B	ISTC-1200(a)

VALVE ID	EXEMPTION BASIS
1-ISIV-18-1020A	ISTC-1200(a)
1-ISIV-18-1020B	ISTC-1200(a)
1-ISIV-18-1021A	ISTC-1200(a)
1-ISIV-18-1021B	ISTC-1200(a)
1-ISIV-18-1022A	ISTC-1200(a)
1-ISIV-18-1022B	ISTC-1200(a)
1-ISIV-18-1023A	ISTC-1200(a)
1-ISIV-18-1023B	ISTC-1200(a)
1-ISIV-82-5068A	ISTC-1200(a)
2-ISIV-82-5068A	ISTC-1200(a)
2-ISIV-82-5069A	ISTC-1200(a)
1-ISIV-82-5069A	ISTC-1200(a)
1-ISIV-82-5070A	ISTC-1200(a)
2-ISIV-82-5070A	ISTC-1200(a)
2-ISIV-82-5071A	ISTC-1200(a)
1-ISIV-82-5071A	ISTC-1200(a)

VALVE ID	EXEMPTION BASIS
2-ISIV-18-1020A	ISTC-1200(a)
2-ISIV-18-1020B	ISTC-1200(a)
2-ISIV-18-1021A	ISTC-1200(a)
2-ISIV-18-1021B	ISTC-1200(a)
2-ISIV-18-1022A	ISTC-1200(a)
2-ISIV-18-1022B	ISTC-1200(a)
2-ISIV-18-1023A	ISTC-1200(a)
2-ISIV-18-1023B	ISTC-1200(a)
0-ISIV-82-5033	ISTA-1100
1-ISIV-82-5072A	ISTC-1200(a)
1-ISIV-82-5072B	ISTC-1200(a)
1-ISIV-82-5073A	ISTC-1200(a)
1-ISIV-82-5073B	ISTC-1200(a)
2-ISIV-82-5074A	ISTC-1200(a)
2-ISIV-82-5074B	ISTC-1200(a)
2-ISIV-82-5075A	ISTC-1200(a)
2-ISIV-82-5075B	ISTC-1200(a)

Flow Diagram: 1-47W600-31A

VALVE ID	EXEMPTION BASIS
1-ISIV-1-301B	ISTC-1200(a)

VALVE ID	EXEMPTION BASIS
1-ISIV-1-302B	ISTC-1200(a)

VALVE ID	EXEMPTION BASIS
1-ISIV-1-277B	ISTC-1200(a)
1-ISIV-1-282B	ISTC-1200(a)

Flow Diagram: 1-47W600-331

VALVE ID	EXEMPTION BASIS
1-ISIV-68-446B	ISTC-1200(a)
1-ISIV-68-446B/8	ISTC-1200(a)
1-ISIV-68-446C	ISTC-1200(a)
1-ISIV-68-446C/8	ISTC-1200(a)

VALVE ID	EXEMPTION BASIS
1-ISIV-68-445B/1	ISTC-1200(a)
1-ISIV-68-446B/1	ISTC-1200(a)
1-ISIV-68-446B/2	ISTC-1200(a)
1-EQIV-68-446D/6	ISTC-1200(a)

VALVE ID	EXEMPTION BASIS
1-ISIV-68-445B/2	ISTC-1200(a)
1-ISIV-68-445B/3	ISTC-1200(a)
1-ISIV-68-446B/3	ISTC-1200(a)
1-ISIV-68-446B/4	ISTC-1200(a)
1-ISIV-68-446B/5	ISTC-1200(a)

Appendix I - Valves Exempt from the IST Program

Flow Diagram: 1-47W600-332

VALVE ID	EXEMPTION BASIS
1-ISIV-68-442B	ISTC-1200(a)
1-ISIV-68-442B/5	ISTC-1200(a)
1-ISIV-68-442C	ISTC-1200(a)
1-DRIV-68-442C/5	ISTC-1200(a)
1-ISIV-68-443B/7	ISTC-1200(a)
1-ISIV-68-443C/7	ISTC-1200(a)

VALVE ID	EXEMPTION BASIS
1-ISIV-68-442B/1	ISTC-1200(a)
1-ISIV-68-442B/2	ISTC-1200(a)
1-EQIV-68-442D/3	ISTC-1200(a)
1-ISIV-68-443B	ISTC-1200(a)
1-ISIV-68-443C	ISTC-1200(a)
1-EQIV-68-443D/5	ISTC-1200(a)
1-ISIV-68-569B	ISTC-1200(a)

VALVE ID	EXEMPTION BASIS
1-ISIV-68-274B	ISTC-1200(a)
1-ISIV-68-443B/1	ISTC-1200(a)
1-ISIV-68-443B/2	ISTC-1200(a)
1-ISIV-68-443B/3	ISTC-1200(a)
1-ISIV-68-443B/4	ISTC-1200(a)
1-ISIV-68-444B/1	ISTC-1200(a)
1-ISIV-68-444B/2	ISTC-1200(a)

Flow Diagram: 1-47W600-381

VALVE ID	EXEMPTION BASIS
0-ISIV-62-368B	ISTA-1100

VALVE ID	EXEMPTION BASIS
0-VTIV-62-368B1	ISTA-1100

Flow Diagram: 1-47W625-1

VALVE ID	EXEMPTION BASIS
1-SMV-43-669	ISTC - 1200(c)
1-TV-43-670	ISTC - 1200(a)
1-SMV-43-673	ISTC - 1200(c)
1-SMV-43-678	ISTC - 1200(c)

VALVE ID	EXEMPTION BASIS
1-TV-43-674	ISTC - 1200(a)
1-TV-43-679	ISTC - 1200(a)
1-CKV-43-1630	ISTA-1100
1-CKV-43-1632	ISTA-1100

VALVE ID	EXEMPTION BASIS
1-FCV-43-1	ISTA-1100
1-FCV-43-10	ISTA-1100
1-FCV-43-20	ISTA-1100
1-FCV-43-21	ISTA-1100

Flow Diagram: 1-47W625-11

VALVE ID	EXEMPTION BASIS
1-ISV-43-1470	ISTC-1200(c)
1-ISV-43-1475	ISTC-1200(c)
1-ISV-43-1476	ISTC-1200(c)
1-ISV-43-1481	ISTC-1200(c)
1-ISV-43-1490	ISTC-1200(c)

VALVE ID	EXEMPTION BASIS
1-ISV-43-1492	ISTC-1200(c)
1-ISV-43-1493	ISTC-1200(c)
1-TV-43-1471	ISTC-1200(a)
1-TV-43-1472	ISTC-1200(a)
1-ISV-43-1491	ISTC-1200(c)

VALVE ID	EXEMPTION BASIS
1-TV-43-1473	ISTC-1200(a)
1-TV-43-1474	ISTC-1200(a)
1-TV-43-1477	ISTC-1200(a)
1-TV-43-1478	ISTC-1200(a)
1-TV-43-1479	ISTC-1200(a)
1-TV-43-1480	ISTC-1200(a)

Appendix I - Valves Exempt from the IST Program

Flow Diagram: 1-47W625-15

VALVE ID	EXEMPTION BASIS
1-ISV-43-833	ISTC - 1200(c)
1-TV-43-836	ISTC - 1200(a)
1-TV-43-837	ISTC - 1200(a)
1-TV-43-839	ISTC - 1200(c)
1-ISV-43-843	ISTC - 1200(c)
1-SMV-43-850	ISTC - 1200(c)
1-SMV-43-852	ISTC - 1200(c)
1-SMV-43-855	ISTC - 1200(c)
1-SMV-43-856	ISTC - 1200(c)
1-TV-43-857	ISTC - 1200(c)

VALVE ID	EXEMPTION BASIS
1-TV-43-310B	ISTC-1200(a)
1-TV-43-840	ISTC-1200(a)
1-TV-43-858	ISTC - 1200(c)
1-ISV-43-1530	ISTA-1100
1-ISV-43-1531	ISTA-1100
1-ISV-43-1532	ISTA-1100
1-ISV-43-1533	ISTA-1100
1-ISV-43-1535	ISTA-1100
1-ISV-43-1536	ISTA-1100
1-FSV-43-268	ISTA-1100
1-FSV-43-312	ISTA-1100

VALVE ID	EXEMPTION BASIS
1-TV-43-251A	ISTC-1200(a)
1-TV-43-251B	ISTC-1200(a)
1-TV-43-288A	ISTC-1200(a)
1-TV-43-288B	ISTC-1200(a)
1-TV-43-310A	ISTC-1200(a)
1-TV-43-319A	ISTC-1200(a)
1-TV-43-319B	ISTC-1200(a)
1-TV-43-883A	ISTC-1200(a)
1-TV-43-883B	ISTC-1200(a)
1-TV-43-884A	ISTC-1200(a)
1-TV-43-884B	ISTC-1200(a)

Flow Diagram: 1-47W625-2

VALVE ID	EXEMPTION BASIS
1-SMV-43-691	ISTC - 1200(c)
1-TV-43-692	ISTC - 1200(a)
1-SMV-43-695	ISTC - 1200(c)
1-TV-43-696	ISTC - 1200(c)
1-SMV-43-699	ISTC - 1200(c)
1-TV-43-700	ISTC - 1200(a)
1-SMV-43-703	ISTC - 1200(c)
1-SMV-43-707	ISTC - 1200(c)

VALVE ID	EXEMPTION BASIS
1-FCV-43-33	ISTA-1100
1-FCV-43-56A	ISTA-1100
1-FCV-43-63B	ISTA-1100
1-TV-43-704	ISTC - 1200(c)
1-TV-43-708	ISTC - 1200(a)
1-FCV-43-59D	ISTA-1100
1-FCV-43-56D	ISTA-1100
1-FCV-43-63D	ISTA-1100
1-FCV-43-54D	ISTA-1100

VALVE ID	EXEMPTION BASIS
1-FCV-43-30	ISTA-1100
1-FCV-43-31	ISTA-1100
1-FCV-43-32	ISTA-1100
1-FCV-43-54A	ISTA-1100
1-FCV-43-54B	ISTA-1100
1-FCV-43-56B	ISTA-1100
1-FCV-43-59A	ISTA-1100
1-FCV-43-59B	ISTA-1100
1-FCV-43-63A	ISTA-1100

Flow Diagram: 1-47W625-22

VALVE ID	EXEMPTION BASIS
1-SMV-43-1199	ISTC-1200(a)

VALVE ID	EXEMPTION BASIS
1-SMV-43-1198	ISTC-1200(a)

Flow Diagram: 1-47W625-23

VALVE ID	EXEMPTION BASIS
1-SMV-43-1288	ISTC - 1200(c)

Appendix I - Valves Exempt from the IST Program

Flow Diagram: 1-47W625-3

VALVE ID	EXEMPTION BASIS	VALVE ID	EXEMPTION BASIS	VALVE ID	EXEMPTION BASIS
1-SMV-43-711	ISTA-1100	1-SMV-43-712	ISTA-1100	1-FCV-43-70	ISTA-1100
				1-FCV-43-71	ISTA-1100

Flow Diagram: 1-47W625-7

VALVE ID	EXEMPTION BASIS	VALVE ID	EXEMPTION BASIS	VALVE ID	EXEMPTION BASIS
1-SMV-43-753	ISTC - 1200(c)	1-SMV-43-745	ISTC - 1200(c)	1-TV-43-754	ISTC - 1200(c)
1-SMV-43-756	ISTC - 1200(c)	1-SMV-43-746	ISTC - 1200(c)	1-TV-43-755	ISTC - 1200(a)

Flow Diagram: 1-47W801-1

VALVE ID	EXEMPTION BASIS	VALVE ID	EXEMPTION BASIS	VALVE ID	EXEMPTION BASIS
1-RTV-1-276A	ISTC - 1200(a)	1-RTV-1-284A	ISTC - 1200(a)	1-THV-1-8	ISTC - 1200(c)
1-RTV-1-277A	ISTC - 1200(a)	1-RTV-1-285A	ISTC - 1200(a)	1-THV-1-18	ISTC - 1200(c)
1-RTV-1-278A	ISTC - 1200(a)	1-RTV-1-286B	ISTC - 1200(a)	1-THV-1-28	ISTC - 1200(c)
1-RTV-1-279A	ISTC - 1200(a)	1-RTV-1-287A	ISTC - 1200(a)	1-THV-1-48	ISTC - 1200(c)
1-RTV-1-280B	ISTC - 1200(a)	1-RTV-1-288A	ISTC - 1200(a)	1-RTV-1-300A	ISTC - 1200(b)
1-RTV-1-281A	ISTC - 1200(a)	1-RTV-1-289A	ISTC - 1200(a)	1-RTV-1-301A	ISTC-1200(a)
1-RTV-1-282A	ISTC - 1200(a)	1-RTV-1-290A	ISTC - 1200(a)	1-RTV-1-302A	ISTC-1200(a)
1-RTV-1-283A	ISTC - 1200(a)	1-RTV-1-291A	ISTC - 1200(a)	1-RTV-1-303A	ISTC - 1200(a)
1-DRV-1-533	ISTC-1200(a)	1-RTV-1-292A	ISTC - 1200(a)	1-RTV-1-304A	ISTC-1200(a)
1-DRV-1-535	ISTC-1200(a)	1-RTV-1-293A	ISTC - 1200(a)	1-RTV-1-305A	ISTC - 1200(a)
1-DRV-1-537	ISTC-1200(a)	1-RTV-1-294B	ISTC-1200(a)	1-RTV-1-306B	ISTC - 1200(a)
1-DRV-1-539	ISTC-1200(a)	1-RTV-1-295A	ISTC-1200(a)	1-RTV-1-307A	ISTC - 1200(a)
1-ISV-1-540	ISTC-1200(a)	1-RTV-1-296A	ISTC - 1200(a)	1-DRV-1-532	ISTA-1100
1-ISV-1-541	ISTC-1200(a)	1-RTV-1-297A	ISTC - 1200(a)	1-DRV-1-534	ISTA-1100
1-ISV-1-542	ISTC-1200(a)	1-RTV-1-298A	ISTC - 1200(a)	1-DRV-1-536	ISTA-1100
1-ISV-1-543	ISTC-1200(a)	1-RTV-1-299A	ISTC - 1200(a)	1-DRV-1-538	ISTA-1100

Appendix I - Valves Exempt from the IST Program

Flow Diagram: 1-47W801-2

VALVE ID	EXEMPTION BASIS
1-DRV-1-804	ISTC - 1200(a)
1-DRV-1-805	ISTC-1200(a)
1-DRV-1-806	ISTC - 1200(a)
1-DRV-1-807	ISTC-1200(a)
1-DRV-1-808	ISTC - 1200(a)
1-DRV-1-809	ISTC-1200(a)
1-DRV-1-810	ISTC - 1200(a)
1-DRV-1-811	ISTC-1200(a)
1-ISV-1-812	ISTC - 1200(c)
1-ISV-1-813	ISTC - 1200(c)
1-DRV-1-858	ISTC - 1200(a)
1-DRV-1-859	ISTC-1200(a)
1-DRV-1-860	ISTC - 1200(a)
1-DRV-1-861	ISTC-1200(a)
1-DRV-1-862	ISTC - 1200(a)
1-DRV-1-863	ISTC-1200(a)
1-DRV-1-864	ISTC - 1200(a)
1-DRV-1-865	ISTC-1200(a)
1-DRV-1-905	ISTC-1200(a)
1-DRV-1-906	ISTC-1200(a)
1-DRV-1-907	ISTC-1200(a)
1-DRV-1-908	ISTC-1200(a)

VALVE ID	EXEMPTION BASIS
1-RTV-1-268A	ISTC - 1200(a)
1-RTV-1-269A	ISTC - 1200(a)
1-RTV-1-270A	ISTC - 1200(a)
1-RTV-1-271A	ISTC - 1200(a)
1-RTV-1-272A	ISTC - 1200(a)
1-RTV-1-273A	ISTC - 1200(a)
1-RTV-1-274A	ISTC - 1200(a)
1-RTV-1-275A	ISTC - 1200(a)
1-ISV-1-814	ISTC - 1200(c)
1-ISV-1-815	ISTC - 1200(c)
1-ISV-1-816	ISTC - 1200(c)
1-ISV-1-817	ISTC - 1200(c)
1-ISV-1-818	ISTC - 1200(c)
1-ISV-1-819	ISTC - 1200(c)
1-SMV-1-820	ISTC - 1200(a)
1-SMV-1-821	ISTC - 1200(a)
1-SMV-1-822	ISTC - 1200(a)
1-SMV-1-823	ISTC - 1200(a)
1-SMV-1-836	ISTC - 1200(a)
1-ISV-1-851	ISTC - 1200(c)
1-ISV-1-852	ISTC - 1200(c)
1-ISV-1-853	ISTC - 1200(c)
1-ISV-1-854	ISTC - 1200(c)

VALVE ID	EXEMPTION BASIS
1-TV-1-824	ISTC - 1200(a)
1-TV-1-825	ISTC - 1200(a)
1-TV-1-826	ISTC - 1200(a)
1-TV-1-827	ISTC - 1200(a)
1-SMV-1-837	ISTC - 1200(a)
1-SMV-1-838	ISTC - 1200(a)
1-SMV-1-839	ISTC - 1200(a)
1-TV-1-866	ISTC - 1200(a)
1-TV-1-867	ISTC - 1200(a)
1-TV-1-868	ISTC - 1200(a)
1-TV-1-869	ISTC - 1200(a)
1-VTV-1-893	ISTC - 1200(a)
1-VTV-1-894	ISTC - 1200(a)
1-VTV-1-895	ISTC - 1200(a)
1-VTV-1-896	ISTC - 1200(a)
1-VTV-1-897	ISTC - 1200(a)
1-VTV-1-898	ISTC - 1200(a)
1-VTV-1-899	ISTC - 1200(a)
1-VTV-1-900	ISTC - 1200(a)
1-VTV-1-901	ISTC - 1200(a)
1-VTV-1-902	ISTC - 1200(a)
1-VTV-1-903	ISTC - 1200(a)
1-VTV-1-904	ISTC - 1200(a)

Appendix I - Valves Exempt from the IST Program

Flow Diagram: 1-47W803-1

VALVE ID	EXEMPTION BASIS
1-DRV-3-500	ISTA-1100
1-DRV-3-502	ISTA-1100
1-DRV-3-504	ISTA-1100
1-DRV-3-506	ISTA-1100
1-DRV-3-514	ISTA-1100
1-DRV-3-518	ISTA-1100
1-DRV-3-522	ISTA-1100
1-DRV-3-526	ISTA-1100
1-DRV-3-592	ISTA-1100
1-DRV-3-594	ISTA-1100
1-DRV-3-596	ISTA-1100
1-VTV-3-630	ISTC-1200(a)
1-VTV-3-631	ISTC-1200(a)
1-VTV-3-632	ISTC-1200(a)
1-VTV-3-633	ISTC-1200(a)
1-DRV-3-636	ISTA-1100
1-DRV-3-639	ISTA-1100
1-DRV-3-641	ISTA-1100
1-DRV-3-646	ISTA-1100
1-DRV-3-650	ISTA-1100
1-DRV-3-653	ISTA-1100
1-DRV-3-657	ISTA-1100
1-DRV-3-659	ISTA-1100
1-DRV-3-664	ISTA-1100
1-DRV-3-666	ISTA-1100
1-DRV-3-673	ISTA-1100
1-DRV-3-675	ISTA-1100
2-DRV-3-675	ISTA-1100

VALVE ID	EXEMPTION BASIS
1-RTV-3-287A	ISTC-1200(a)
1-RTV-3-289A	ISTC-1200(a)
1-RTV-3-292A	ISTC-1200(a)
1-DRV-3-501	ISTC-1200(a)
1-DRV-3-503	ISTC-1200(a)
1-DRV-3-505	ISTC-1200(a)
1-DRV-3-507	ISTC-1200(a)
1-DRV-3-515	ISTC-1200(a)
1-DRV-3-519	ISTC-1200(a)
1-DRV-3-523	ISTC-1200(a)
1-DRV-3-527	ISTC-1200(a)
1-DRV-3-589	ISTC-1200(a)
1-DRV-3-590	ISTA-1100
1-DRV-3-591	ISTC-1200(a)
1-DRV-3-593	ISTC-1200(a)
1-DRV-3-595	ISTC-1200(a)
1-DRV-3-637	ISTC-1200(a)
1-DRV-3-640	ISTC-1200(a)
1-DRV-3-642	ISTC-1200(a)
1-DRV-3-647	ISTC-1200(a)
2-DRV-3-647	ISTC-1200(a)
1-DRV-3-651	ISTC-1200(a)
1-DRV-3-654	ISTC-1200(a)
1-DRV-3-658	ISTC-1200(a)
1-DRV-3-660	ISTC-1200(a)
1-DRV-3-665	ISTC-1200(a)
1-DRV-3-667	ISTC-1200(a)
1-DRV-3-674	ISTC-1200(a)
1-DRV-3-676	ISTC-1200(a)

VALVE ID	EXEMPTION BASIS
1-RTV-3-280A	ISTC-1200(a)
1-RTV-3-280B	ISTC-1200(a)
1-RTV-3-281A	ISTC-1200(a)
1-RTV-3-282A	ISTC-1200(a)
1-RTV-3-283A	ISTC-1200(a)
1-RTV-3-284A	ISTC-1200(a)
1-RTV-3-285A	ISTC-1200(a)
1-RTV-3-286A	ISTC-1200(a)
1-RTV-3-286B	ISTC-1200(a)
1-RTV-3-288A	ISTC-1200(a)
1-RTV-3-290A	ISTC-1200(a)
1-RTV-3-291A	ISTC-1200(a)
1-RTV-3-293A	ISTC-1200(a)
1-RTV-3-294A	ISTC-1200(a)
1-RTV-3-294B	ISTC-1200(a)
1-RTV-3-295A	ISTC-1200(a)
1-RTV-3-296A	ISTC-1200(a)
1-RTV-3-297A	ISTC-1200(a)
1-RTV-3-298A	ISTC-1200(a)
1-RTV-3-299A	ISTC-1200(a)
1-RTV-3-300A	ISTC-1200(a)
1-RTV-3-301A	ISTC-1200(a)
1-RTV-3-302A	ISTC-1200(a)
1-RTV-3-303A	ISTC-1200(a)
1-RTV-3-304A	ISTC-1200(a)
1-RTV-3-305A	ISTC-1200(a)
1-RTV-3-306A	ISTC-1200(a)
1-RTV-3-306B	ISTC-1200(a)
1-RTV-3-307A	ISTC-1200(a)

Appendix I - Valves Exempt from the IST Program

Flow Diagram: 1-47W803-3

VALVE ID	EXEMPTION BASIS	VALVE ID	EXEMPTION BASIS	VALVE ID	EXEMPTION BASIS
1-VTV-3-930	ISTC-1200(a)	1-IDV-3-935	ISTA-1100	1-PCV-3-183	ISTC-1200(b)
1-VTV-3-931	ISTC-1200(a)	2-IDV-3-936	ISTA-1100	1-RTV-3-345A	ISTC-1200(a)
1-VTV-3-932	ISTC-1200(a)	1-DRV-3-933	ISTC-1200(a)	1-IDV-3-936	ISTA-1100
1-BYV-3-952	ISTC-1200(c)	1-DRV-3-894	ISTC-1200(a)	1-IDV-3-914	ISTC-1200(c)
1-DRV-3-813	ISTC-1200(a)	1-DRV-3-895	ISTC-1200(a)	1-IDV-3-915	ISTC-1200(c)
1-DRV-3-940	ISTC-1200(a)	1-DRV-3-934	ISTC-1200(a)	1-IDV-3-916	ISTC-1200(c)
1-DRV-3-893	ISTC-1200(a)	1-DRV-3-918	ISTC-1200(a)	1-IDV-3-917	ISTC-1200(c)
		1-DRV-3-919	ISTC-1200(a)	1-IDV-3-920	ISTC-1200(c)

Flow Diagram: 1-47W809-1

VALVE ID	EXEMPTION BASIS	VALVE ID	EXEMPTION BASIS	VALVE ID	EXEMPTION BASIS
1-ISV-62-527	ISTC-1200(c)	1-RTV-62-420A	ISTC - 1200(a)	1-FCV-62-9	ISTA-1100
1-ISV-62-509	ISTC-1200(c)	1-RTV-62-352A	ISTC - 1200(a)	1-FCV-62-22	ISTA-1100
1-DRV-62-521	ISTC-1200(a)	1-RTV-62-353A	ISTC - 1200(a)	1-FCV-62-35	ISTA-1100
1-ISV-62-524	ISTB1200(c)	1-RTV-62-350A	ISTC - 1200(a)	1-FCV-62-48	ISTA-1100
1-ISV-62-531	ISTC-1200(c)	1-RTV-62-351A	ISTC - 1200(a)	1-FCV-62-53	ISTA-1100
1-DRV-62-528	ISTC-1200(a)	1-RTV-62-354A	ISTC - 1200(a)	1-FCV-62-54	ISTA-1100
1-ISV-62-510	ISTC-1200(c)	1-RTV-62-355A	ISTC - 1200(a)	1-FCV-62-55	ISTA-1100
1-ISV-62-533	ISTC-1200(c)	1-RTV-62-356A	ISTC - 1200(a)	1-FCV-62-56	ISTA-1100
1-ISV-62-534	ISTC - 1200(c)	1-RTV-62-357A	ISTC - 1200(a)	1-PCV-62-81	ISTA-1100
1-ISV-62-535	ISTC-1200(c)	1-RTV-62-358A	ISTC - 1200(a)	2-PCV-62-81	ISTA-1100
1-ISV-62-537	ISTC-1200(c)	1-RTV-62-359A	ISTC - 1200(a)	1-FCV-62-83	ISTA-1100
1-VTV-62-600	ISTC-1200(a)	1-RTV-62-360A	ISTC - 1200(a)	1-FCV-62-89	ISTA-1100
1-VTV-62-584	ISTC - 1200(a)	1-RTV-62-361A	ISTC - 1200(a)	1-FCV-62-93	ISTC-1200(b)
1-VTV-62-587	ISTC - 1200(a)	1-RTV-62-362A	ISTC - 1200(a)	1-FCV-62-125	ISTA-1100
1-VTV-62-603	ISTC-1200(a)	1-RTV-62-363A	ISTC - 1200(a)	1-PCV-62-126	ISTA-1100
1-ISV-62-547	ISTC-1200(c)	1-RTV-62-364A	ISTC - 1200(a)	1-VTV-62-522	ISTC - 1200(a)
1-ISV-62-548	ISTC-1200(c)	1-ISV-62-718	ISTC - 1200(c)	1-CKV-62-723	ISTA-1100
1-ISV-62-549	ISTC-1200(c)	1-RTV-62-304A	ISTC - 1200(a)	1-VTV-62-1062	ISTC - 1200(a)
1-ISV-62-550	ISTC-1200(c)	1-RTV-62-305A	ISTC - 1200(a)	1-FCV-62-86	ISTA-1100
1-BYV-62-546	ISTC - 1200(c)	1-RTV-62-306A	ISTC - 1200(a)	1-LCV-62-118	ISTA-1100
1-BYV-62-538	ISTC - 1200(c)	1-RTV-62-307A	ISTC - 1200(a)	1-VTV-62-512	ISTC - 1200(a)
1-BYV-62-643	ISTC - 1200(c)	1-RTV-62-308A	ISTC - 1200(a)	1-ISV-62-526	ISTA-1100
1-BYV-62-648	ISTC - 1200(c)	1-RTV-62-309A	ISTC - 1200(a)	1-FCV-62-98	ISTC-1200(c)

Appendix I - Valves Exempt from the IST Program

VALVE ID	EXEMPTION BASIS
1-BYV-62-653	ISTC-1200(c)
1-BYV-62-657	ISTC-1200(c)
1-BYV-62-672	ISTC - 1200(c)
1-DRV-62-1235	ISTC-1200(a)
1-DRV-62-501	ISTC-1200(a)
1-DRV-62-502	ISTC-1200(a)
1-ISV-62-520	ISTC - 1200(a)
1-ISV-62-709	ISTC - 1200(c)
1-ISV-62-539	ISTC-1200(c)
1-ISV-62-536	ISTC-1200(c)
1-DRV-62-540	ISTC-1200(a)
1-DRV-62-541	ISTC-1200(a)
1-DRV-62-542	ISTC-1200(a)
1-DRV-62-553	ISTC-1200(a)
1-DRV-62-554	ISTC-1200(a)
1-DRV-62-580	ISTC-1200(a)
1-DRV-62-581	ISTC-1200(a)
1-DRV-62-582	ISTC-1200(a)
1-DRV-62-583	ISTC-1200(a)
1-DRV-62-646	ISTC-1200(a)
1-DRV-62-651	ISTC-1200(a)
1-DRV-62-655	ISTC-1200(a)
1-DRV-62-664	ISTC-1200(a)
1-DRV-62-665	ISTC-1200(a)
1-DRV-62-666	ISTC-1200(a)
1-DRV-62-667	ISTC-1200(a)
1-DRV-62-678	ISTC - 1200(a)
1-DRV-62-683	ISTC - 1200(a)
1-DRV-62-695	ISTC-1200(a)
1-DRV-62-701	ISTC-1200(a)
1-DRV-62-703	ISTC-1200(a)
1-DRV-62-704	ISTC-1200(a)
1-DRV-62-705	ISTC-1200(a)
1-DRV-62-706	ISTC-1200(a)
1-DRV-62-710	ISTC - 1200(a)

VALVE ID	EXEMPTION BASIS
1-RTV-62-312A	ISTC - 1200(a)
1-RTV-62-313A	ISTC-1200(a)
1-RTV-62-314A	ISTC - 1200(a)
1-RTV-62-315A	ISTC - 1200(a)
1-RTV-62-316A	ISTC - 1200(a)
1-RTV-62-317A	ISTC - 1200(a)
1-RTV-62-320A	ISTC - 1200(a)
1-RTV-62-321A	ISTC - 1200(a)
1-RTV-62-322A	ISTC-1200(a)
1-RTV-62-323A	ISTC - 1200(a)
1-RTV-62-328A	ISTC - 1200(a)
1-RTV-62-329A	ISTC - 1200(a)
1-RTV-62-330A	ISTC - 1200(a)
1-RTV-62-331A	ISTC - 1200(a)
1-RTV-62-332A	ISTA-1100
1-RTV-62-333A	ISTC - 1200(a)
1-RTV-62-334A	ISTC - 1200(a)
1-RTV-62-335A	ISTC - 1200(a)
1-RTV-62-336A	ISTC - 1200(a)
1-RTV-62-337A	ISTC - 1200(a)
1-RTV-62-341A	ISTC - 1200(a)
1-RTV-62-342A	ISTC - 1200(a)
1-RTV-62-343A	ISTC - 1200(a)
1-RTV-62-421A	ISTC - 1200(a)
1-RTV-62-422A	ISTC - 1200(a)
1-RTV-62-423A	ISTC - 1200(a)
1-RTV-62-424A	ISTC - 1200(a)
1-RTV-62-425A	ISTC - 1200(a)
1-RTV-62-426A	ISTC - 1200(a)
1-RTV-62-427A	ISTC - 1200(a)
1-RTV-62-428A	ISTC - 1200(a)
1-RTV-62-429A	ISTC - 1200(a)
1-RTV-62-430A	ISTC - 1200(a)
1-RTV-62-431A	ISTC - 1200(a)
1-RTV-62-432A	ISTC - 1200(a)

VALVE ID	EXEMPTION BASIS
1-TCV-62-79	ISTA-1100
1-FCV-62-99	ISTC-1200(c)
1-VTV-62-513	ISTC - 1200(a)
1-FCV-62-85	ISTA-1100
1-FCV-62-59	ISTA-1100
1-VTV-62-529	ISTC - 1200(a)
1-VTV-62-551	ISTC - 1200(a)
1-VTV-62-552	ISTC - 1200(a)
1-VTV-62-585	ISTC - 1200(a)
1-VTV-62-586	ISTC - 1200(a)
1-VTV-62-601	ISTC-1200(a)
1-VTV-62-602	ISTC-1200(a)
1-VTV-62-645	ISTC - 1200(a)
1-VTV-62-654	ISTC - 1200(a)
2-VTV-62-654	ISTC - 1200(a)
1-VTV-62-682	ISTC - 1200(a)
1-VTV-62-699	ISTC - 1200(a)
1-BYV-62-680	ISTC-1200(c)
2-ISV-62-520	ISTA-1100
1-CKV-62-684	ISTA-1100
1-CKV-62-507	ISTA-1100
1-ISV-62-696	ISTA-1100
1-CKV-62-589	ISTA-1100
1-CKV-62-588	ISTA-1100
2-ISV-62-508	ISTA-1100
1-ISV-62-687	ISTA-1100
1-SMV-62-689	ISTA-1100
1-SMV-62-674	ISTA-1100
1-CKV-62-658	ISTA-1100
1-CKV-62-694	ISTA-1100
1-CKV-62-590	ISTA-1100
1-SMV-62-676	ISTA-1100
1-CKV-62-697	ISTA-1100
1-CKV-62-594	ISTA-1100
1-CKV-62-595	ISTA-1100

Appendix I - Valves Exempt from the IST Program

VALVE ID	EXEMPTION BASIS
1-DRV-62-711	ISTC - 1200(a)
1-DRV-62-719	ISTA-1100
1-DRV-62-720	ISTC-1200(a)
1-DRV-62-721	ISTC - 1200(a)
1-DRV-62-722	ISTC-1200(a)
1-INJ-62-556	ISTC-1200(b)
1-INJ-62-557	ISTC-1200(b)
1-INJ-62-558	ISTC-1200(b)
1-INJ-62-559	ISTC-1200(b)
1-ISV-62-508	ISTC-1200(c)
1-ISV-62-564	ISTC-1200(c)
1-ISV-62-565	ISTC-1200(c)
1-ISV-62-566	ISTC-1200(c)
1-ISV-62-567	ISTC-1200(c)
1-ISV-62-642	ISTA-1100
1-ISV-62-644	ISTA-1100
1-ISV-62-647	ISTC-1200(c)
1-ISV-62-650	ISTC-1200(c)
1-ISV-62-652	ISTC-1200(c)
1-ISV-62-669	ISTC - 1200(c)
1-ISV-62-671	ISTC - 1200(c)
1-ISV-62-673	ISTC - 1200(c)
1-ISV-62-679	ISTC - 1200(c)
1-ISV-62-681	ISTC - 1200(c)
1-ISV-62-686	ISTC - 1200(c)
1-ISV-62-690	ISTC - 1200(c)
1-ISV-62-691	ISTC - 1200(c)
1-ISV-62-698	ISTC - 1200(c)
2-ISV-62-691	ISTC - 1200(c)

VALVE ID	EXEMPTION BASIS
1-RTV-62-433A	ISTC - 1200(a)
1-RTV-62-434A	ISTC - 1200(a)
1-RTV-62-435A	ISTC - 1200(a)
1-RTV-62-436A	ISTC - 1200(a)
1-RTV-62-437A	ISTC - 1200(a)
1-RTV-62-438A	ISTC - 1200(a)
1-RTV-62-439A	ISTC - 1200(a)
1-RTV-62-440A	ISTC - 1200(a)
1-RTV-62-441A	ISTC - 1200(a)
1-RTV-62-442A	ISTC - 1200(a)
1-RTV-62-443A	ISTC - 1200(a)
1-SMV-62-670	ISTC - 1200(a)
2-SMV-62-670	ISTC - 1200(a)
1-SMV-62-677	ISTC - 1200(a)
1-SMV-62-685	ISTC - 1200(c)
1-TV-62-544	ISTC - 1200(a)
1-TV-62-545	ISTC - 1200(a)
1-TV-62-606	ISTC - 1200(a)
1-TV-62-607	ISTC - 1200(a)
1-TV-62-555	ISTC - 1200(a)
1-TV-62-615	ISTC - 1200(a)
1-TV-62-568	ISTC - 1200(a)
1-TV-62-569	ISTC - 1200(a)
1-TV-62-570	ISTC - 1200(a)
1-TV-62-571	ISTC - 1200(a)
1-TV-62-572	ISTC - 1200(a)
1-TV-62-573	ISTC - 1200(a)
1-TV-62-574	ISTC - 1200(a)
1-TV-62-575	ISTC - 1200(a)

VALVE ID	EXEMPTION BASIS
1-CKV-62-592	ISTA-1100
1-CKV-62-593	ISTA-1100
1-RFV-62-688	ISTA-1100
1-CKV-62-591	ISTA-1100
1-SMV-62-668	ISTC-1200(c)
1-ISV-62-500	ISTC-1200(c)
1-ISV-62-656	ISTC-1200(c)
1-ISV-62-713	ISTC-1200(c)
1-TV-62-611	ISTC - 1200(a)
1-TV-62-612	ISTC - 1200(a)
1-TV-62-613	ISTC - 1200(a)
1-TV-62-614	ISTC - 1200(a)
1-TV-62-616	ISTC - 1200(a)
1-TV-62-617	ISTC - 1200(a)
1-TV-62-618	ISTC - 1200(a)
1-TV-62-619	ISTC - 1200(a)
1-TV-62-604	ISTC - 1200(a)
1-TV-62-708	ISTC - 1200(a)
1-TV-62-605	ISTC - 1200(a)
1-TV-62-707	ISTC - 1200(a)
1-TV-62-608	ISTC - 1200(a)
1-TV-62-637	ISTC - 1200(a)
1-TV-62-609	ISTC - 1200(a)
1-TV-62-641	ISTC - 1200(a)
1-TV-62-610	ISTC - 1200(a)
1-TV-62-700	ISTC - 1200(a)
1-TV-62-663	ISTC - 1200(a)
1-TV-62-717	ISTC - 1200(a)
1-TV-62-715	ISTC - 1200(c)
1-VTV-62-503	ISTC - 1200(a)

Appendix I - Valves Exempt from the IST Program

Flow Diagram: 1-47W809-2

VALVE ID	EXEMPTION BASIS
1-ISV-62-901	ISTC - 1200(c)
1-ISV-62-902	ISTC - 1200(c)
1-ISV-62-904	ISTC - 1200(a)
1-ISV-62-908	ISTC - 1200(c)
1-ISV-62-909	ISTC - 1200(c)
1-ISV-62-916	ISTC - 1200(c)
1-ISV-62-918	ISTC - 1200(a)
1-ISV-62-919	ISTC - 1200(c)
1-ISV-62-922	ISTC - 1200(c)
1-ISV-62-927	ISTC - 1200(c)
1-CKV-62-930	ISTA-1100
1-ISV-62-932	ISTC - 1200(c)
1-ISV-62-936	ISTC - 1200(c)
1-RTV-62-347A	ISTC - 1200(a)
1-RTV-62-348A	ISTC - 1200(a)

VALVE ID	EXEMPTION BASIS
1-RTV-62-365A	ISTC - 1200(a)
1-RTV-62-445A	ISTC - 1200(a)
1-RTV-62-446A	ISTC - 1200(a)
1-CKV-62-900	ISTA-1100
1-ISV-62-911	ISTA-1100
1-ISV-62-912	ISTA-1100
1-ISV-62-915	ISTA-1100
1-CKV-62-931	ISTA-1100
2-CKV-62-935	ISTA-1100
1-CKV-62-937	ISTA-1100
1-ISV-62-938	ISTA-1100
1-CKV-62-1075	ISTA-1100
1-FCV-62-144	ISTA-1100
1-FCV-62-128	ISTA-1100
1-FCV-62-140	ISTA-1100

VALVE ID	EXEMPTION BASIS
1-VTV-62-903	ISTA-1100
1-ISV-62-905	ISTA-1100
1-DRV-62-906	ISTA-1100
1-FLV-62-907	ISTA-1100
1-VTV-62-910	ISTA-1100
1-DRV-62-913	ISTA-1100
1-FLV-62-914	ISTA-1100
1-VTV-62-917	ISTA-1100
1-DRV-62-920	ISTA-1100
1-FLV-62-921	ISTA-1100
1-CKV-62-928	ISTA-1100
1-ISV-62-929	ISTA-1100
1-CKV-62-935	ISTA-1100
1-SMV-62-939	ISTC-1200(a)
1-ISV-62-944	ISTC-1200(c)
1-FCV-62-138	ISTA-1100

Appendix I - Valves Exempt from the IST Program

Flow Diagram: 1-47W810-1

VALVE ID	EXEMPTION BASIS
1-HCV-74-34	ISTC-1200(c)
1-HCV-74-36	ISTC-1200(b)
1-HCV-74-37	ISTC-1200(b)
1-ISV-74-501	ISTC - 1200(a)
1-ISV-74-506	ISTC - 1200(a)
1-RTV-74-100A	ISTC - 1200(a)
1-RTV-74-101A	ISTC - 1200(a)
1-RTV-74-102A	ISTC - 1200(a)
1-FLV-74-512	ISTC-1200(c)
1-ISV-74-520	ISTC - 1200(c)
1-ISV-74-524	ISTC - 1200(c)
1-ISV-74-525	ISTC - 1200(c)
1-ISV-74-521	ISTC - 1200(c)
1-FLV-74-513	ISTC-1200(c)
1-ISV-74-518	ISTC - 1200(a)
1-ISV-74-527	ISTC - 1200(a)
1-SPV-74-531	ISTC-1200(a)

VALVE ID	EXEMPTION BASIS
1-RTV-74-103A	ISTC - 1200(a)
1-RTV-74-104A	ISTC - 1200(a)
1-SMV-74-522	ISTC - 1200(a)
1-SMV-74-532	ISTC - 1200(c)
1-DRV-74-516	ISTC-1200(a)
1-DRV-74-509	ISTC-1200(a)
1-DRV-74-526	ISTC-1200(a)
1-DRV-74-519	ISTC-1200(a)
1-DRV-74-517	ISTC-1200(a)
1-SMV-74-533	ISTC - 1200(c)
1-SMV-74-523	ISTC - 1200(a)
1-RTV-74-107A	ISTC - 1200(a)
1-RTV-74-108A	ISTC - 1200(a)
1-RTV-74-109A	ISTC - 1200(a)
1-RTV-74-110A	ISTC - 1200(a)
1-RTV-74-111A	ISTC - 1200(a)
1-TV-74-504	ISTC - 1200(a)
1-TV-74-543	ISTC - 1200(a)

VALVE ID	EXEMPTION BASIS
1-VTV-74-10	ISTC - 1200(a)
1-VTV-74-20	ISTC - 1200(a)
1-FCV-74-32	ISTA-1100
1-VTV-74-41	ISTC - 1200(a)
1-VTV-74-42	ISTC - 1200(a)
1-VTV-74-538	ISTC - 1200(a)
1-SPV-74-530	ISTC-1200(a)
1-DRV-74-508	ISTC-1200(a)
1-DRV-74-507	ISTC-1200(a)
1-DRV-74-502	ISTC-1200(a)
1-VTV-74-536	ISTC - 1200(a)
1-DRV-74-541	ISTC-1200(a)
1-DRV-74-500	ISTC - 1200(a)
1-DRV-74-503	ISTC - 1200(a)
1-DRV-74-537	ISTC-1200(a)
1-DRV-74-542	ISTC-1200(a)
1-DRV-74-540	ISTC-1200(a)
1-VTV-74-539	ISTC - 1200(a)

Flow Diagram: 1-47W811-1

VALVE ID	EXEMPTION BASIS
1-ISV-63-72	ISTC-1200(c)
1-ISV-63-73	ISTC-1200(c)
1-ISV-63-172	ISTC-1200(c)
1-ISV-63-434	ISTC - 1200(c)
1-ISV-63-435	ISTC - 1200(c)
1-ISV-63-436	ISTC - 1200(c)
1-ISV-63-439	ISTC - 1200(c)
1-ISV-63-441	ISTC - 1200(c)
1-ISV-63-518	ISTC-1200(c)
1-DRV-63-691A	ISTC-1200(a)
1-DRV-63-597	ISTC - 1200(a)
1-DRV-63-700	ISTC-1200(a)
1-DRV-63-519	ISTC-1200(a)

VALVE ID	EXEMPTION BASIS
1-RTV-63-371A	ISTC - 1200(a)
1-RTV-63-372A	ISTC - 1200(a)
1-TV-63-834	ISTC - 1200(a)
1-TV-63-835	ISTC - 1200(a)
1-TV-63-836	ISTC - 1200(a)
1-TV-63-628	ISTC - 1200(a)
1-TV-63-684	ISTC - 1200(a)
1-TV-63-687	ISTC-1200(a)
1-TV-63-688	ISTC - 1200(a)
1-TV-63-541	ISTC - 1200(a)
1-TV-63-537	ISTC - 1200(a)
1-TV-63-538	ISTC - 1200(a)
1-TV-63-630	ISTC - 1200(a)

VALVE ID	EXEMPTION BASIS
1-VTV-63-16	ISTC-1200(a)
1-VTV-63-17	ISTC-1200(a)
1-ISIV-63-180B	ISTC-1200(a)
1-ISIV-63-181B	ISTC-1200(a)
1-ISIV-63-182B	ISTC-1200(a)
1-ISIV-63-183B	ISTC-1200(a)
2-ISV-63-564	ISTA-1100
1-ISV-63-564	ISTA-1100
1-TV-63-837	ISTC-1200(a)
1-TV-63-838	ISTC - 1200(a)
1-TV-63-839	ISTC - 1200(a)
1-TV-63-840	ISTC-1200(a)
1-TV-63-841	ISTC - 1200(a)

Appendix I - Valves Exempt from the IST Program

VALVE ID	EXEMPTION BASIS
1-DRV-63-658	ISTC-1200(a)
1-ISV-63-525	ISTC-1200(c)
1-RTV-63-301A	ISTC - 1200(a)
1-RTV-63-303A	ISTC - 1200(a)
1-RTV-63-315A	ISTC - 1200(a)
1-RTV-63-316A	ISTC - 1200(a)
1-RTV-63-305A	ISTC - 1200(a)
1-RTV-63-306A	ISTC - 1200(a)
1-RTV-63-311A	ISTC - 1200(a)
1-RTV-63-312A	ISTC - 1200(a)
1-RTV-63-337A	ISTC - 1200(a)
1-RTV-63-338A	ISTC - 1200(a)
1-RTV-63-339A	ISTC - 1200(a)
1-RTV-63-340A	ISTC - 1200(a)
1-RTV-63-313A	ISTC - 1200(a)
1-RTV-63-314A	ISTC - 1200(a)
1-RTV-63-307A	ISTC - 1200(a)
1-RTV-63-308A	ISTC - 1200(a)
1-RTV-63-317A	ISTC - 1200(a)
1-RTV-63-318A	ISTC - 1200(a)
1-RTV-63-304A	ISTC - 1200(a)
1-RTV-63-302A	ISTC - 1200(a)
1-ISV-63-527	ISTC-1200(c)
1-DRV-63-509	ISTC - 1200(a)
1-DRV-63-514	ISTC-1200(a)
1-DRV-63-705	ISTC-1200(a)
1-DRV-63-650	ISTC-1200(a)
1-DRV-63-596	ISTC - 1200(a)
1-DRV-63-699	ISTC-1200(a)
1-DRV-63-691	ISTC - 1200(a)
1-DRV-63-652	ISTC-1200(a)
1-DRV-63-653	ISTC - 1200(a)
1-DRV-63-655	ISTC-1200(a)
1-DRV-63-656	ISTC-1200(a)
1-DRV-63-818	ISTC-1200(a)

VALVE ID	EXEMPTION BASIS
1-TV-63-696	ISTC-1200(a)
1-TV-63-697	ISTC-1200(a)
1-RTV-63-389A	ISTC - 1200(a)
1-RTV-63-390A	ISTC - 1200(a)
1-RTV-63-409A	ISTC - 1200(a)
1-RTV-63-410A	ISTC - 1200(a)
1-TV-63-505	ISTC - 1200(a)
1-TV-63-508	ISTC - 1200(a)
1-RTV-63-387A	ISTC - 1200(a)
1-RTV-63-388A	ISTC - 1200(a)
1-THV-63-546	ISTC - 1200(c)
1-RTV-63-391A	ISTC - 1200(a)
1-RTV-63-392A	ISTC - 1200(a)
1-TV-63-693	ISTC-1200(a)
1-TV-63-694	ISTC-1200(a)
1-TV-63-631	ISTC - 1200(a)
1-TV-63-504	ISTC - 1200(a)
1-TV-63-540	ISTC - 1200(a)
1-TV-63-629	ISTC - 1200(a)
1-TV-63-681	ISTC - 1200(a)
1-TV-63-682	ISTC - 1200(a)
1-TV-63-692	ISTC-1200(a)
1-TV-63-685	ISTC-1200(a)
1-TV-63-539	ISTC - 1200(a)
1-TV-63-636	ISTC - 1200(a)
1-TV-63-675	ISTC - 1200(a)
1-TV-63-676	ISTC-1200(a)
1-TV-63-677	ISTC - 1200(a)
1-TV-63-680	ISTC-1200(a)
1-TV-63-565	ISTC - 1200(a)
1-TV-63-575	ISTC - 1200(a)
1-TV-63-590	ISTC - 1200(a)
1-TV-63-591	ISTC - 1200(a)
1-TV-63-592	ISTC - 1200(a)
1-TV-63-593	ISTC - 1200(a)

VALVE ID	EXEMPTION BASIS
1-VTV-63-30	ISTC - 1200(a)
1-VTV-63-54	ISTC - 1200(a)
1-VTV-63-105	ISTC - 1200(a)
1-VTV-63-113	ISTC - 1200(a)
1-VTV-63-179	ISTC - 1200(a)
1-VTV-63-184	ISTC - 1200(a)
1-VTV-63-420	ISTC - 1200(a)
1-VTV-63-421	ISTC - 1200(a)
1-VTV-63-728	ISTC-1200(a)
1-VTV-63-657	ISTC - 1200(a)
1-VTV-63-659	ISTC - 1200(a)
1-VTV-63-660	ISTC - 1200(a)
1-RTV-63-386A	ISTC - 1200(a)
1-VTV-63-517	ISTC - 1200(a)
1-VTV-63-727	ISTC - 1200(a)
1-THV-63-542	ISTC-1200(b)
1-THV-63-544	ISTC-1200(b)
1-FCV-63-39	ISTC-1200(c)
1-FCV-63-40	ISTC-1200(c)
1-VTV-63-512	ISTC - 1200(a)
1-THV-63-548	ISTC-1200(b)
1-VTV-63-729	ISTC - 1200(a)
1-RTV-63-385A	ISTC - 1200(a)
1-VTV-63-197	ISTC - 1200(a)
1-VTV-63-198	ISTC - 1200(a)
1-VTV-63-661	ISTC - 1200(a)
1-VTV-63-649	ISTC - 1200(a)
1-VTV-63-730	ISTC-1200(a)
1-VTV-63-423	ISTC - 1200(a)
1-VTV-63-422	ISTC - 1200(a)
1-VTV-63-34	ISTC - 1200(a)
1-VTV-63-101	ISTC - 1200(a)
1-VTV-63-193	ISTC - 1200(a)
1-VTV-63-194	ISTC - 1200(a)
1-VTV-63-155	ISTC - 1200(a)

Appendix I - Valves Exempt from the IST Program

VALVE ID	EXEMPTION BASIS
1-DRV-63-819	ISTC-1200(a)
1-DRV-63-820	ISTC-1200(a)
1-DRV-63-821	ISTC-1200(a)
1-DRV-63-822	ISTC-1200(a)
1-DRV-63-823	ISTC-1200(a)
1-DRV-63-824	ISTC-1200(a)
1-DRV-63-825	ISTC-1200(a)
1-DRV-63-506	ISTC-1200(a)
1-DRV-63-507	ISTC-1200(a)
1-DRV-63-520	ISTC - 1200(a)
1-DRV-63-533	ISTC-1200(a)
1-DRV-63-568	ISTC-1200(a)
1-DRV-63-667	ISTC-1200(a)
1-DRV-63-668	ISTC-1200(a)
1-DRV-63-669	ISTC-1200(a)
1-DRV-63-670	ISTC-1200(a)
1-DRV-63-671	ISTC-1200(a)
1-DRV-63-672	ISTC-1200(a)
1-DRV-63-673	ISTC-1200(a)
1-DRV-63-674	ISTC-1200(a)
1-DRV-63-686	ISTC-1200(a)
1-ISV-63-610	ISTC - 1200(c)
1-ISV-63-611	ISTC - 1200(c)
1-ISV-63-612	ISTC - 1200(c)
1-ISV-63-613	ISTC - 1200(c)
1-ISV-63-618	ISTC - 1200(c)
1-ISV-63-619	ISTC - 1200(c)
1-ISV-63-620	ISTC - 1200(c)
1-ISV-63-621	ISTC - 1200(c)
1-RTV-63-319A	ISTC - 1200(a)
1-RTV-63-320A	ISTC - 1200(a)
1-RTV-63-321A	ISTC - 1200(a)
1-RTV-63-322A	ISTC - 1200(a)
1-RTV-63-323A	ISTC - 1200(a)
1-RTV-63-324A	ISTC - 1200(a)

VALVE ID	EXEMPTION BASIS
1-TV-63-594	ISTC - 1200(a)
1-TV-63-595	ISTC - 1200(a)
1-TV-63-599	ISTC - 1200(a)
1-TV-63-703	ISTC-1200(a)
1-TV-63-704	ISTC-1200(a)
1-TV-63-706	ISTC-1200(a)
1-TV-63-707	ISTC - 1200(a)
1-TV-63-709	ISTC-1200(a)
1-RTV-63-373A	ISTC - 1200(a)
1-RTV-63-374A	ISTC - 1200(a)
1-RTV-63-375A	ISTC - 1200(a)
1-RTV-63-376A	ISTC - 1200(a)
1-RTV-63-377A	ISTC - 1200(a)
1-RTV-63-378A	ISTC - 1200(a)
1-RTV-63-379A	ISTC - 1200(a)
1-RTV-63-380A	ISTC - 1200(a)
1-RTV-63-381A	ISTC - 1200(a)
1-RTV-63-382A	ISTC - 1200(a)
1-RTV-63-383A	ISTC - 1200(a)
1-RTV-63-384A	ISTC - 1200(a)
1-RTV-63-354A	ISTC - 1200(a)
1-RTV-63-355A	ISTC - 1200(a)
1-RTV-63-356A	ISTC - 1200(a)
1-RTV-63-357A	ISTC - 1200(a)
1-RTV-63-358A	ISTC - 1200(a)
1-RTV-63-359A	ISTC - 1200(a)
1-RTV-63-360A	ISTC - 1200(a)
1-RTV-63-361A	ISTC - 1200(a)
1-RTV-63-362A	ISTC - 1200(a)
1-RTV-63-363A	ISTC - 1200(a)
1-RTV-63-364A	ISTC - 1200(a)
1-RTV-63-365A	ISTC - 1200(a)
1-RTV-63-366A	ISTC - 1200(a)
1-RTV-63-393A	ISTC - 1200(a)
1-RTV-63-394A	ISTC - 1200(a)

VALVE ID	EXEMPTION BASIS
1-VTV-63-168	ISTC - 1200(a)
1-VTV-63-169	ISTC - 1200(a)
1-VTV-63-171	ISTC - 1200(a)
1-VTV-63-32	ISTC - 1200(a)
1-VTV-63-55	ISTC - 1200(a)
1-VTV-63-85	ISTC - 1200(a)
1-VTV-63-176	ISTC - 1200(a)
1-VTV-63-178	ISTC - 1200(a)
1-VTV-63-114	ISTC - 1200(a)
1-VTV-63-142	ISTC - 1200(a)
1-VTV-63-143	ISTC - 1200(a)
1-VTV-63-154	ISTC - 1200(a)
1-VTV-63-195	ISTC - 1200(a)
1-VTV-63-196	ISTC - 1200(a)
1-VTV-63-199	ISTC - 1200(a)
1-VTV-63-189	ISTC - 1200(a)
1-VTV-63-190	ISTC - 1200(a)
1-VTV-63-191	ISTC - 1200(a)
1-VTV-63-192	ISTC - 1200(a)
1-VTV-63-424	ISTC - 1200(a)
1-VTV-63-425	ISTC - 1200(a)
1-VTV-63-500	ISTC - 1200(a)
1-ISV-63-601	ISTA-1100
1-SMV-63-615	ISTA-1100
1-VTV-63-651	ISTC - 1200(a)
1-VTV-63-654	ISTC - 1200(a)
1-VTV-63-720	ISTC - 1200(a)
1-VTV-63-826	ISTC - 1200(a)
1-VTV-63-827	ISTC - 1200(a)
1-VTV-63-828	ISTC - 1200(a)
1-VTV-63-829	ISTC - 1200(a)
1-VTV-63-830	ISTC - 1200(a)
1-VTV-63-831	ISTC - 1200(a)
1-VTV-63-832	ISTC - 1200(a)
1-VTV-63-833	ISTC - 1200(a)

Appendix I - Valves Exempt from the IST Program

VALVE ID	EXEMPTION BASIS
1-RTV-63-325A	ISTC - 1200(a)
1-RTV-63-326A	ISTC - 1200(a)
1-RTV-63-327A	ISTC - 1200(a)
1-RTV-63-328A	ISTC - 1200(a)
1-RTV-63-329A	ISTC - 1200(a)
1-RTV-63-330A	ISTC - 1200(a)
1-RTV-63-331A	ISTC - 1200(a)
1-RTV-63-333A	ISTC - 1200(a)
1-RTV-63-334A	ISTC - 1200(a)
1-RTV-63-309A	ISTC - 1200(a)
1-RTV-63-310A	ISTC - 1200(a)
1-RTV-63-341A	ISTC - 1200(a)
1-RTV-63-342A	ISTC - 1200(a)
1-RTV-63-343A	ISTC - 1200(a)
1-RTV-63-344A	ISTC - 1200(a)
1-RTV-63-345A	ISTC - 1200(a)
1-RTV-63-346A	ISTC - 1200(a)
1-RTV-63-347A	ISTC - 1200(a)
1-RTV-63-348A	ISTC - 1200(a)
1-RTV-63-349A	ISTC - 1200(a)
1-RTV-63-350A	ISTC - 1200(a)
1-RTV-63-352A	ISTC - 1200(a)
1-RTV-63-353A	ISTC - 1200(a)

VALVE ID	EXEMPTION BASIS
1-RTV-63-395A	ISTC - 1200(a)
1-RTV-63-396A	ISTC - 1200(a)
1-RTV-63-397A	ISTC - 1200(a)
1-RTV-63-398A	ISTC - 1200(a)
1-RTV-63-399A	ISTC - 1200(a)
1-RTV-63-400A	ISTC - 1200(a)
1-RTV-63-401A	ISTC - 1200(a)
1-RTV-63-402A	ISTC - 1200(a)
1-RTV-63-403A	ISTC - 1200(a)
1-RTV-63-404A	ISTC - 1200(a)
1-RTV-63-405A	ISTC - 1200(a)
1-RTV-63-406A	ISTC - 1200(a)
1-RTV-63-407A	ISTC - 1200(a)
1-RTV-63-408A	ISTC - 1200(a)
1-TV-63-501	ISTC - 1200(a)
1-TV-63-503	ISTC - 1200(a)
1-TV-63-515	ISTC - 1200(a)
1-TV-63-529	ISTC - 1200(a)
1-SMV-63-614	ISTC - 1200(a)
1-SMV-63-532	ISTC - 1200(a)
1-SMV-63-569	ISTC - 1200(a)
1-SMV-63-578	ISTC - 1200(a)
1-SMV-63-600	ISTC - 1200(a)
1-SMV-63-617	ISTC - 1200(a)

VALVE ID	EXEMPTION BASIS
1-VTV-63-576	ISTC - 1200(a)
1-VTV-63-606	ISTC - 1200(a)
1-VTV-63-607	ISTC - 1200(a)
1-VTV-63-608	ISTC - 1200(a)
1-VTV-63-609	ISTC - 1200(a)
1-VTV-63-638	ISTC - 1200(a)
1-VTV-63-639	ISTC - 1200(a)
1-VTV-63-642	ISTC - 1200(a)
1-THV-63-550	ISTC-1200(b)
1-THV-63-584	ISTC-1200(b)
1-THV-63-552	ISTC-1200(b)
1-THV-63-585	ISTC-1200(b)
1-THV-63-556	ISTC-1200(b)
1-THV-63-582	ISTC-1200(b)
1-THV-63-554	ISTC-1200(b)
1-SMV-63-616	ISTA-1100
1-TV-63-513	ISTA-1100
1-DRV-63-690	ISTC-1200(a)
1-RTV-63-351A	ISTC-1200(a)
1-RTV-63-332A	ISTC-1200(a)
1-TV-63-678	ISTC-1200(a)
1-THV-63-583	ISTC-1200(b)

Appendix I - Valves Exempt from the IST Program

Flow Diagram: 1-47W812-1

VALVE ID	EXEMPTION BASIS	VALVE ID	EXEMPTION BASIS	VALVE ID	EXEMPTION BASIS
1-ISV-72-41	ISTC-1200(a)	1-VTV-72-10	ISTC - 1200(a)	1-VTV-72-536	ISTC-1200(a)
1-ISV-72-44	ISTC - 1200(c)	1-VTV-72-11	ISTC - 1200(a)	1-VTV-72-514	ISTC-1200(a)
1-ISV-72-45	ISTC - 1200(c)	1-RTV-72-210A	ISTC - 1200(a)	1-DRV-72-566	ISTC-1200(a)
1-ISV-72-503	ISTC-1200(a)	1-RTV-72-212A	ISTC - 1200(a)	1-VTV-72-534	ISTC-1200(a)
1-FLV-72-510	ISTC-1200(c)	1-TV-72-550	ISTC-1200(a)	1-VTV-72-532	ISTC-1200(a)
1-FLV-72-522	ISTC-1200(c)	1-TV-72-544	ISTC-1200(a)	1-DRV-72-530	ISTC-1200(a)
1-DRV-72-556	ISTC-1200(a)	1-DRV-72-570	ISTC-1200(a)	1-DRV-72-526	ISTC-1200(a)
1-ISV-72-528	ISTC - 1200(c)	1-DRV-72-542	ISTC - 1200(a)	1-DRV-72-520	ISTC-1200(a)
1-RTV-72-208A	ISTC-1200(a)	1-VTV-72-568	ISTC - 1200(a)	1-DRV-72-554	ISTC-1200(a)
1-RTV-72-213A	ISTC-1200(a)	1-DRV-72-538	ISTC-1200(a)	1-TV-72-560	ISTC-1200(a)
1-RTV-72-211A	ISTC-1200(a)	1-DRV-72-572	ISTC-1200(a)	1-TV-72-546	ISTC-1200(a)
1-RTV-72-209A	ISTC-1200(a)	1-VTV-72-540	ISTC - 1200(a)	1-TV-72-547	ISTC-1200(a)
1-RTV-72-214A	ISTC - 1200(a)	1-TV-72-552	ISTC-1200(a)	1-TV-72-561	ISTC-1200(a)
1-DRV-72-512	ISTC-1200(a)	1-TV-72-564	ISTC-1200(a)	1-DRV-72-555	ISTC-1200(a)
1-RTV-72-203A	ISTC-1200(a)	1-TV-72-558	ISTC-1200(a)	1-DRV-72-531	ISTC-1200(a)
1-ISV-72-529	ISTC - 1200(c)	1-DRV-72-571	ISTC-1200(a)	1-TV-72-551	ISTC-1200(a)
1-RTV-72-202A	ISTC - 1200(a)	1-TV-72-559	ISTC-1200(a)	1-TV-72-545	ISTC-1200(a)
1-DRV-72-557	ISTC-1200(a)	1-TV-72-565	ISTC-1200(a)	1-DRV-72-569	ISTC-1200(a)
1-FLV-72-511	ISTC-1200(c)	1-DRV-72-513	ISTC-1200(a)	1-VTV-72-541	ISTC - 1200(a)
1-FLV-72-523	ISTC-1200(c)	1-TV-72-553	ISTC - 1200(a)	1-DRV-72-539	ISTC-1200(a)
1-DRV-72-521	ISTC-1200(a)	1-RTV-72-207A	ISTC - 1200(a)	1-VTV-72-537	ISTC-1200(a)
1-RTV-72-201A	ISTC-1200(a)	1-VTV-72-567	ISTC - 1200(a)	1-DRV-72-527	ISTC-1200(a)
1-DRV-72-543	ISTC - 1200(a)	1-RTV-72-206A	ISTC - 1200(a)	1-VTV-72-515	ISTC-1200(a)
1-ISV-72-504	ISTC-1200(a)	1-RTV-72-204A	ISTC-1200(a)	1-VTV-72-533	ISTC-1200(a)
1-ISV-72-501	ISTC - 1200(c)	1-RTV-72-205A	ISTC-1200(a)	1-VTV-72-535	ISTC-1200(a)
1-ISV-72-500	ISTC - 1200(c)	1-RTV-72-216A	ISTC-1200(a)	1-DRV-72-505	ISTC-1200(a)
1-ISV-72-502	ISTC - 1200(c)	1-RTV-72-215A	ISTC - 1200(a)	2-DRV-72-505	ISTC-1200(a)

Appendix I - Valves Exempt from the IST Program

Flow Diagram: 1-47W813-1

VALVE ID	EXEMPTION BASIS
1-RTV-68-387A	ISTC - 1200(a)
1-RTV-68-401A	ISTC - 1200(a)
1-RTV-68-402A	ISTC - 1200(a)
1-RTV-68-403A	ISTC - 1200(a)
1-RTV-68-407A	ISTC - 1200(a)
1-RTV-68-411A	ISTC - 1200(a)
1-RTV-68-412A	ISTC - 1200(a)
1-RTV-68-413A	ISTC - 1200(a)
1-RTV-68-414A	ISTC - 1200(c)
1-RTV-68-421A	ISTC - 1200(a)
1-RTV-68-422A	ISTC - 1200(a)
1-RTV-68-423A	ISTC - 1200(a)
1-RTV-68-424A	ISTC - 1200(c)
1-LOV-68-501	ISTC - 1200(c)
1-LOV-68-502	ISTC - 1200(c)
1-DRV-68-503	ISTB-1200(a)
1-DRV-68-551	ISTC-1200(a)
1-BYV-68-552	ISTC - 1200(c)
1-BYV-68-555	ISTC - 1200(c)
1-DRV-68-593	ISTC-1200(a)
1-ISV-68-1107	ISTC-1200(a)

VALVE ID	EXEMPTION BASIS
1-RTV-68-428A	ISTC - 1200(a)
1-RTV-68-429A	ISTC - 1200(a)
1-RTV-68-431A	ISTC - 1200(a)
1-RTV-68-432A	ISTC - 1200(a)
1-RTV-68-433A	ISTC - 1200(a)
1-RTV-68-434A	ISTC - 1200(c)
1-RTV-68-441A	ISTC - 1200(c)
1-RTV-68-442A	ISTC - 1200(a)
1-RTV-68-443A	ISTC - 1200(a)
1-RTV-68-444A	ISTC - 1200(a)
1-RTV-68-445A	ISTC - 1200(a)
1-RTV-68-446A	ISTC - 1200(a)
1-RTV-68-454A	ISTC - 1200(a)
1-TV-68-556	ISTC - 1200(a)
1-TV-68-560	ISTC - 1200(a)
1-TV-68-561	ISTC - 1200(a)
1-RTV-68-569A	ISTC - 1200(a)
1-SMV-68-578	ISTC - 1200(c)
1-TV-68-601	ISTC - 1200(a)
1-VTV-68-500	ISTC - 1200(c)
1-RTV-68-455A	ISTC - 1200(a)
1-RTV-68-453A	ISTC - 1200(a)

VALVE ID	EXEMPTION BASIS
1-PCV-68-340B	ISTA-1100
1-PCV-68-340D	ISTA-1100
1-RTV-68-404A	ISTC-1200(a)
1-SMV-68-548	ISTA-1100
1-DRV-68-549	ISTC-1200(a)
1-DRV-68-550	ISTC-1200(a)
1-DRV-68-553	ISTC-1200(a)
1-DRV-68-554	ISTC-1200(a)
1-DRV-68-557	ISTC-1200(a)
1-DRV-68-558	ISTC-1200(a)
1-SMV-68-575	ISTA-1100
1-SMV-68-576	ISTA-1100
1-VTV-68-577	ISTC - 1200(a)
1-ISV-68-579	ISTA-1100
1-ISV-68-580	ISTA-1100
1-DRV-68-581	ISTC-1200(a)
1-DRV-68-582	ISTC-1200(a)
1-VTV-68-594	ISTC - 1200(a)
1-VTV-68-604	ISTC - 1200(a)
1-ISV-68-1108	ISTC-1200(a)
1-VTV-68-607	ISTC - 1200(c)
1-VTV-68-603	ISTC - 1200(a)

Flow Diagram: 1-47W814-2

VALVE ID	EXEMPTION BASIS
1-TV-61-532	ISTC-1200(a)

VALVE ID	EXEMPTION BASIS
1-TV-61-681	ISTC-1200(a)

VALVE ID	EXEMPTION BASIS
1-TV-61-691	ISTC-1200(a)
1-TV-61-746	ISTC-1200(a)

Appendix I - Valves Exempt from the IST Program

Flow Diagram: 1-47W830-12

VALVE ID	EXEMPTION BASIS
1-ISV-32-9291	ISTA-1100
1-ISV-32-9294	ISTA-1100
1-ISV-32-9295	ISTA-1100
1-ISV-32-9292	ISTA-1100
1-ISV-32-9293	ISTA-1100

VALVE ID	EXEMPTION BASIS
1-TV-32-9219	ISTC - 1200(a)
1-TV-32-9249	ISTC - 1200(a)
1-TV-32-9229	ISTC - 1200(a)
1-TV-32-9239	ISTC - 1200(a)
1-ISV-32-9296	ISTA-1100

VALVE ID	EXEMPTION BASIS
1-TV-32-9289	ISTC - 1200(a)
1-TV-32-9259	ISTC - 1200(a)
1-ISV-32-9297	ISTA-1100
1-ISV-32-9290	ISTA-1100
1-TV-32-9269	ISTC - 1200(a)
1-TV-32-9279	ISTC - 1200(a)

Flow Diagram: 1-47W839-1

VALVE ID	EXEMPTION BASIS
1-ISIV-82-5068B	ISTC-1200(a)
1-ISIV-82-5069B	ISTC-1200(a)
1-CKV-82-505A1	ISTC-1200skid
1-CKV-82-539A2	ISTC-1200skid
1-ISV-82-540A2	ISTA-1100
1-ISV-82-506A1	ISTA-1100
1-CKV-82-536A2	ISTC-1200skid
1-CKV-82-502A1	ISTC-1200skid
1-CKV-82-509A1	ISTC-1200skid
1-CKV-82-543A2	ISTC-1200skid
1-CKV-82-565A2	ISTC-1200skid
1-CKV-82-531A1	ISTC-1200skid
1-CKV-82-523A1	ISTC-1200skid
1-CKV-82-557A2	ISTC-1200skid
1-FCV-82-171	ISTC-1200skid
1-FCV-82-160	ISTC-1200skid
1-FCV-82-170	ISTC-1200skid
1-FCV-82-161	ISTC-1200skid
1-FSV-82-170	ISTC-1200skid
1-CKV-82-753A1	ISTC-1200skid
1-CKV-82-754A1	ISTC-1200skid
1-CKV-82-755A2	ISTC-1200skid
1-CKV-82-756A2	ISTC-1200skid

VALVE ID	EXEMPTION BASIS
1-FSV-82-160	ISTC-1200skid
1-FSV-82-171	ISTC-1200skid
1-FSV-82-161	ISTC-1200skid
1-ISV-82-537A2	ISTA-1100
1-ISV-82-503A1	ISTA-1100
1-ISV-82-542A2	ISTC-1200(c)
1-ISV-82-508A1	ISTC-1200(c)
1-ISV-82-510A1	ISTC-1200(c)
1-ISV-82-544A1	ISTC-1200(c)
1-ISV-82-546A2	ISTA-1100
1-ISV-82-512A1	ISTA-1100
1-ISV-82-514A1	ISTA-1100
1-ISV-82-548A2	ISTA-1100
1-ISV-82-525A1	ISTC-1200(c)
1-ISV-82-554A2	ISTC-1200(c)
1-ISV-82-562A2	ISTC-1200(c)
1-ISV-82-520A1	ISTC-1200(c)
1-ISV-82-551A2	ISTC-1200(c)
1-ISV-82-559A2	ISTC-1200(c)
1-ISV-82-528A1	ISTC-1200(c)
1-ISV-82-517A1	ISTC-1200(c)
1-LOV-82-515A1	ISTC-1200(a)
1-LOV-82-550A2	ISTC-1200(a)

VALVE ID	EXEMPTION BASIS
1-LOV-82-516A1	ISTC-1200(a)
1-LOV-82-549A2	ISTC-1200(a)
1-PREG-82-172B	ISTC-1200skid
1-PREG-82-163B	ISTC-1200skid
1-PREG-82-173B	ISTC-1200skid
1-PREG-82-162B	ISTC-1200skid
1-RTV-82-406A	ISTC-1200(a)
1-RTV-82-401A	ISTC-1200(a)
1-RTV-82-405A	ISTC-1200(a)
1-RTV-82-400A	ISTC-1200(a)
1-RTV-82-402A	ISTC-1200(a)
1-RTV-82-407A	ISTC-1200(a)
1-RTV-82-404A	ISTC-1200(a)
1-RTV-82-403A	ISTC-1200(a)
1-PCV-82-172A	ISTC-1200skid
1-PCV-82-162A	ISTC-1200skid
1-PCV-82-173A	ISTC-1200skid
1-PCV-82-163A	ISTC-1200skid
1-LOV-82-526A1	ISTC-1200(a)
1-LOV-82-552A2	ISTC-1200(a)
1-LOV-82-518A1	ISTC-1200(a)
1-LOV-82-560A2	ISTC-1200(a)
1-SPV-82-524A1	ISTC-1200skid
1-SPV-82-558A2	ISTC-1200skid

Appendix I - Valves Exempt from the IST Program

Flow Diagram: 1-47W839-1A

VALVE ID	EXEMPTION BASIS	VALVE ID	EXEMPTION BASIS	VALVE ID	EXEMPTION BASIS
1-CKV-82-754B1	ISTC-1200skid	1-FSV-82-201	ISTC-1200skid	1-PCV-82-193A	ISTC-1200skid
1-CKV-82-755B2	ISTC-1200skid	1-FSV-82-200	ISTC-1200skid	1-PCV-82-203A	ISTC-1200skid
1-CKV-82-756B2	ISTC-1200skid	1-FSV-82-190	ISTC-1200skid	1-PCV-82-192A	ISTC-1200skid
1-ISIV-82-5070B	ISTC-1200(a)	1-ISV-82-503B1	ISTA-1100	1-LOV-82-518B1	ISTC-1200(a)
1-ISIV-82-5071B	ISTC-1200(a)	1-ISV-82-537B2	ISTA-1100	1-LOV-82-526B1	ISTC-1200(a)
1-CKV-82-753B1	ISTC-1200skid	1-ISV-82-508B1	ISTC-1200(c)	1-LOV-82-560B2	ISTC-1200(a)
1-CKV-82-539B2	ISTC-1200skid	1-ISV-82-542B2	ISTC-1200(c)	1-LOV-82-552B2	ISTC-1200(a)
1-CKV-82-505B1	ISTC-1200skid	1-ISV-82-510B1	ISTC-1200(c)	1-SPV-82-558B2	ISTC-1200skid
1-ISV-82-540B2	ISTA-1100	1-ISV-82-544B1	ISTC-1200(c)	1-SPV-82-524B1	ISTC-1200skid
1-ISV-82-506B1	ISTA-1100	1-ISV-82-512B1	ISTA-1100	1-LOV-82-515B1	ISTC-1200(a)
1-CKV-82-536B2	ISTC-1200skid	1-ISV-82-546B2	ISTA-1100	1-LOV-82-516B1	ISTC-1200(a)
1-CKV-82-502B1	ISTC-1200skid	1-ISV-82-548B2	ISTA-1100	1-PREG-82-192B	ISTC-1200skid
1-CKV-82-509B1	ISTC-1200skid	1-ISV-82-514B1	ISTA-1100	1-PREG-82-202B	ISTC-1200skid
1-CKV-82-543B2	ISTC-1200skid	1-ISV-82-562B2	ISTC-1200(c)	1-PREG-82-193B	ISTC-1200skid
1-CKV-82-531B1	ISTC-1200skid	1-ISV-82-528B1	ISTC-1200(c)	1-PREG-82-203B	ISTC-1200skid
1-CKV-82-565B2	ISTC-1200skid	1-ISV-82-551B2	ISTC-1200(c)	1-RTV-82-414A	ISTC-1200(a)
1-CKV-82-557B2	ISTC-1200skid	1-ISV-82-525B1	ISTC-1200(c)	1-RTV-82-408A	ISTC-1200(a)
1-CKV-82-523B1	ISTC-1200skid	1-ISV-82-520B1	ISTC-1200(c)	1-RTV-82-413A	ISTC-1200(a)
1-FCV-82-201	ISTC-1200skid	1-ISV-82-554B2	ISTC-1200(c)	1-RTV-82-415A	ISTC-1200(a)
1-FCV-82-191	ISTC-1200skid	1-ISV-82-559B2	ISTC-1200(c)	1-RTV-82-410A	ISTC-1200(a)
1-FCV-82-190	ISTC-1200skid	1-ISV-82-517B1	ISTC-1200(c)	1-RTV-82-409A	ISTC-1200(a)
1-FCV-82-200	ISTC-1200skid	1-LOV-82-550B2	ISTC-1200(a)	1-RTV-82-411A	ISTC-1200(a)
1-FSV-82-191	ISTC-1200skid	1-LOV-82-549B2	ISTC-1200(a)	1-RTV-82-412A	ISTC-1200(a)
				1-PCV-82-202A	ISTC-1200skid

Flow Diagram: 1-47W845-3

VALVE ID	EXEMPTION BASIS	VALVE ID	EXEMPTION BASIS	VALVE ID	EXEMPTION BASIS
1-ISV-67-232	ISTC - 1200(a)	1-THV-67-564A	ISTC - 1200(c)	1-TCV-67-129	ISTA-1100
1-ISV-67-237	ISTC - 1200(a)	1-THV-67-564B	ISTC - 1200(c)	1-TCV-67-132	ISTA-1100
1-ISV-67-238	ISTC - 1200(a)	1-THV-67-564C	ISTC - 1200(c)	1-TCV-67-137	ISTA-1100
1-RTV-67-848A	ISTC-1200(a)	1-THV-67-564D	ISTC - 1200(c)	2-TCV-67-140	ISTA-1100
1-RTV-67-848B	ISTC-1200(a)	1-THV-67-567A	ISTC - 1200(c)	1-TCV-67-140	ISTA-1100
1-RTV-67-849A	ISTC-1200(a)	1-THV-67-567B	ISTC - 1200(c)	1-THV-67-567D	ISTC-1200(b)
1-RTV-67-849B	ISTC-1200(a)	1-THV-67-567C	ISTC - 1200(c)	1-TV-67-1210	ISTC-1200(a)

Appendix I - Valves Exempt from the IST Program

VALVE ID	EXEMPTION BASIS
1-RTV-67-850A	ISTC-1200(a)
1-ISV-67-1004C	ISTA-1100
1-ISV-67-1005A	ISTA-1100
1-ISV-67-583A	ISTC - 1200(c)
1-ISV-67-583C	ISTC - 1200(c)
1-ISV-67-587A	ISTC - 1200(c)
1-DRV-67-775	ISTC-1200(a)
1-DRV-67-776	ISTC-1200(a)
1-DRV-67-777	ISTC-1200(a)
1-DRV-67-778	ISTC-1200(a)
1-DRV-67-996	ISTC-1200(a)
1-DRV-67-998	ISTC-1200(a)
1-BYV-67-589A	ISTC - 1200(c)
1-BYV-67-589C	ISTC - 1200(c)
1-DRV-67-1006C	ISTC-1200(a)
1-DRV-67-767	ISTC-1200(a)
1-DRV-67-768	ISTC-1200(a)
1-DRV-67-769	ISTC-1200(a)
1-DRV-67-770	ISTC-1200(a)
1-ISV-67-587C	ISTC - 1200(c)
1-ISV-67-692A	ISTC - 1200(c)
1-ISV-67-692C	ISTC - 1200(c)
1-ISV-67-1004A	ISTA-1100
1-ISV-67-1005C	ISTA-1100
1-RTV-67-840A	ISTC-1200(a)
1-RTV-67-840B	ISTC-1200(a)
1-RTV-67-841A	ISTC-1200(a)
1-RTV-67-841B	ISTC-1200(a)
1-RTV-67-842A	ISTC-1200(a)
1-RTV-67-842B	ISTC-1200(a)
1-RTV-67-843A	ISTC-1200(a)
1-RTV-67-843B	ISTC-1200(a)
1-RTV-67-844A	ISTC-1200(a)
1-RTV-67-844B	ISTC-1200(a)
1-RTV-67-845A	ISTC-1200(a)

VALVE ID	EXEMPTION BASIS
1-THV-67-572A	ISTC - 1200(c)
1-THV-67-572B	ISTC - 1200(c)
1-THV-67-572C	ISTC - 1200(c)
1-THV-67-572D	ISTC - 1200(c)
1-TV-67-864A	ISTC-1200(a)
1-TV-67-864B	ISTC-1200(a)
1-TV-67-865A	ISTC-1200(a)
1-TV-67-865B	ISTC-1200(a)
1-TV-67-915	ISTC-1200(a)
1-TV-67-916	ISTC-1200(a)
1-TV-67-917	ISTC-1200(a)
1-TV-67-918	ISTC-1200(a)
1-TV-67-919A	ISTC-1200(a)
1-TV-67-919B	ISTC-1200(a)
1-TV-67-920A	ISTC-1200(a)
1-TV-67-920B	ISTC-1200(a)
1-THV-67-588A	ISTC - 1200(c)
1-RTV-67-850B	ISTC-1200(a)
1-RTV-67-851A	ISTC-1200(a)
1-RTV-67-851B	ISTC-1200(a)
1-THV-67-588C	ISTC - 1200(c)
1-TV-67-560A	ISTC-1200(a)
1-TV-67-560C	ISTC-1200(a)
1-TV-67-563A	ISTC-1200(a)
1-TV-67-563C	ISTC-1200(a)
1-TV-67-574A	ISTC-1200(a)
1-TV-67-574C	ISTC-1200(a)
1-TV-67-576A	ISTC-1200(a)
1-TV-67-576C	ISTC-1200(a)
1-TV-67-578A	ISTC-1200(a)
1-TV-67-578C	ISTC-1200(a)
1-TV-67-579A	ISTC-1200(a)
1-TV-67-579C	ISTC-1200(a)
1-TV-67-581A	ISTC-1200(a)
1-TV-67-581C	ISTC-1200(a)

VALVE ID	EXEMPTION BASIS
1-TV-67-1211	ISTC-1200(a)
1-TV-67-1212	ISTC-1200(a)
1-TV-67-1213	ISTC-1200(a)
1-VTV-67-688A	ISTC - 1200(a)
1-VTV-67-688C	ISTC - 1200(a)
1-VTV-67-689A	ISTC - 1200(a)
1-VTV-67-689C	ISTC - 1200(a)
1-VTV-67-693A	ISTC - 1200(a)
1-VTV-67-693C	ISTC - 1200(a)
1-VTV-67-694A	ISTC - 1200(a)
1-VTV-67-700C	ISTC - 1200(a)
1-TCV-67-93	ISTA-1100
1-TCV-67-92	ISTA-1100
1-TCV-67-84	ISTA-1100
1-VTV-67-699C	ISTC - 1200(a)
1-VTV-67-700A	ISTC - 1200(a)
1-TCV-67-86	ISTA-1100
1-VTV-67-694C	ISTC - 1200(a)
1-VTV-67-695A	ISTC - 1200(a)
1-VTV-67-695C	ISTC - 1200(a)
1-VTV-67-696A	ISTC - 1200(a)
1-VTV-67-696C	ISTC - 1200(a)
1-VTV-67-698A	ISTC - 1200(a)
1-VTV-67-698C	ISTC - 1200(a)
1-VTV-67-699A	ISTC - 1200(a)
1-CKV-67-571C	ISTA-1100
1-ISV-67-691C	ISTA-1100
1-CKV-67-571A	ISTA-1100
1-TCV-67-85	ISTA-1100
1-TCV-67-94	ISTA-1100
1-CKV-67-568C	ISTA-1100
1-CKV-67-568A	ISTA-1100
1-CKV-67-565C	ISTA-1100
1-CKV-67-565A	ISTA-1100
1-ISV-67-691A	ISTA-1100

Appendix I - Valves Exempt from the IST Program

VALVE ID	EXEMPTION BASIS
1-RTV-67-845B	ISTC-1200(a)
1-RTV-67-846A	ISTC-1200(a)
1-RTV-67-846B	ISTC-1200(a)
1-RTV-67-847A	ISTC-1200(a)
1-RTV-67-847B	ISTC-1200(a)
1-ISV-67-1005D	ISTA-1100
1-RTV-67-836A	ISTC-1200(a)
1-RTV-67-836B	ISTC-1200(a)
1-RTV-67-837A	ISTC-1200(a)
1-RTV-67-837B	ISTC-1200(a)
1-RTV-67-838A	ISTC-1200(a)
1-RTV-67-838B	ISTC-1200(a)
1-RTV-67-839A	ISTC-1200(a)
1-RTV-67-839B	ISTC-1200(a)
1-ISV-67-1004B	ISTA-1100
1-ISV-67-692D	ISTC - 1200(c)
1-ISV-67-692B	ISTC - 1200(c)
1-ISV-67-587D	ISTC - 1200(c)
1-DRV-67-771	ISTC-1200(a)
1-DRV-67-772	ISTC-1200(a)
1-DRV-67-773	ISTC-1200(a)
1-DRV-67-774	ISTC-1200(a)
1-DRV-67-763	ISTC-1200(a)
1-DRV-67-764	ISTC-1200(a)
1-DRV-67-765	ISTC-1200(a)
1-DRV-67-766	ISTC-1200(a)
1-BYV-67-589D	ISTC - 1200(c)
1-DRV-67-1001	ISTC-1200(a)
1-BYV-67-589B	ISTC - 1200(c)
1-DRV-67-997	ISTC-1200(a)
1-DRV-67-999	ISTC-1200(a)
1-ISV-67-587B	ISTC - 1200(c)
1-ISV-67-583D	ISTC - 1200(c)
1-ISV-67-583B	ISTC - 1200(c)
1-ISV-67-1005B	ISTA-1100

VALVE ID	EXEMPTION BASIS
1-TV-67-584A	ISTC-1200(a)
1-TV-67-584C	ISTC-1200(a)
1-TV-67-586A	ISTC-1200(a)
1-TV-67-586C	ISTC-1200(a)
1-TV-67-690A	ISTC-1200(a)
1-TV-67-690C	ISTC-1200(a)
1-TV-67-690D	ISTC-1200(a)
1-TV-67-862A	ISTC-1200(a)
1-TV-67-862B	ISTC-1200(a)
1-TV-67-863A	ISTC-1200(a)
1-TV-67-863B	ISTC-1200(a)
1-TV-67-690B	ISTC-1200(a)
1-TV-67-586D	ISTC-1200(a)
1-TV-67-586B	ISTC-1200(a)
1-TV-67-584D	ISTC-1200(a)
1-TV-67-584B	ISTC-1200(a)
1-TV-67-581D	ISTC-1200(a)
1-TV-67-581B	ISTC-1200(a)
1-TV-67-579D	ISTC-1200(a)
1-TV-67-579B	ISTC-1200(a)
1-TV-67-578D	ISTC-1200(a)
1-TV-67-578B	ISTC-1200(a)
1-TV-67-576D	ISTC-1200(a)
1-TV-67-576B	ISTC-1200(a)
1-TV-67-574D	ISTC-1200(a)
1-TV-67-574B	ISTC-1200(a)
1-TV-67-563D	ISTC-1200(a)
1-TV-67-563B	ISTC-1200(a)
1-TV-67-560D	ISTC-1200(a)
1-TV-67-560B	ISTC-1200(a)
1-THV-67-588D	ISTC - 1200(c)
1-THV-67-588B	ISTC - 1200(c)
1-TV-67-911	ISTC-1200(a)
1-TV-67-912	ISTC-1200(a)
1-TV-67-913	ISTC-1200(a)

VALVE ID	EXEMPTION BASIS
1-CKV-67-571B	ISTA-1100
1-ISV-67-691B	ISTA-1100
1-CKV-67-568D	ISTA-1100
1-CKV-67-571D	ISTA-1100
1-CKV-67-565B	ISTA-1100
1-CKV-67-565D	ISTA-1100
1-TCV-67-109	ISTA-1100
1-CKV-67-568B	ISTA-1100
1-ISV-67-691D	ISTA-1100
1-VTV-67-699B	ISTC - 1200(a)
1-VTV-67-698D	ISTC - 1200(a)
1-VTV-67-698B	ISTC - 1200(a)
1-VTV-67-696D	ISTC - 1200(a)
1-VTV-67-696B	ISTC - 1200(a)
1-VTV-67-695D	ISTC - 1200(a)
1-VTV-67-695B	ISTC - 1200(a)
1-VTV-67-694D	ISTC - 1200(a)
1-TCV-67-108	ISTA-1100
1-TCV-67-110	ISTA-1100
1-TCV-67-101	ISTA-1100
1-TCV-67-102	ISTA-1100
1-TCV-67-100	ISTA-1100
1-VTV-67-700B	ISTC - 1200(a)
1-VTV-67-699D	ISTC - 1200(a)
1-VTV-67-700D	ISTC - 1200(a)
1-TV-67-921A	ISTC-1200(a)
1-TV-67-921B	ISTC-1200(a)
1-TV-67-922A	ISTC-1200(a)
1-TV-67-922B	ISTC-1200(a)
1-VTV-67-694B	ISTC - 1200(a)
1-VTV-67-693D	ISTC - 1200(a)
1-VTV-67-693B	ISTC - 1200(a)
1-VTV-67-689D	ISTC - 1200(a)
1-VTV-67-689B	ISTC - 1200(a)
1-VTV-67-688D	ISTC - 1200(a)

Appendix I - Valves Exempt from the IST Program

VALVE ID	EXEMPTION BASIS	VALVE ID	EXEMPTION BASIS	VALVE ID	EXEMPTION BASIS
1-ISV-67-1004D	ISTA-1100	1-TV-67-914	ISTC-1200(a)	1-VTV-67-688B	ISTC - 1200(a)

Flow Diagram: 1-47W845-4

VALVE ID	EXEMPTION BASIS	VALVE ID	EXEMPTION BASIS	VALVE ID	EXEMPTION BASIS
0-THV-67-618A	ISTC-1200(c)	1-ISV-67-751	ISTC-1200(c)	0-PCV-67-1222	ISTC-1200(b)
0-THV-67-618B	ISTC-1200(c)	1-RTV-67-889A	ISTC-1200(a)	0-TCV-67-1222A	ISTC-1200(b)
1-ISV-67-1015B	ISTA-1100	1-RTV-67-889B	ISTC-1200(a)	0-TCV-67-1222B	ISTC-1200(b)
1-ISV-67-1016B	ISTA-1100	1-ISV-67-680	ISTC-1200(c)	1-ISV-67-716A	ISTA-1100
1-DRV-67-1017B	ISTC-1200(a)	1-THV-67-611A	ISTC - 1200(c)	1-ISV-67-715A	ISTA-1100
0-TV-67-617A	ISTC-1200(a)	1-THV-67-643A	ISTC - 1200(c)	1-FCV-67-188	ISTC-1200(c)
0-ISV-67-678A	ISTC-1200(c)	1-THV-67-601A	ISTC - 1200(c)	1-ISV-67-644A	ISTC-1200(c)
0-ISV-67-678B	ISTC-1200(c)	1-THV-67-604A	ISTC - 1200(c)	0-TCV-67-1050	ISTC-1200(b)
0-FSV-67-1221	ISTC-1200skid	1-THV-67-605A	ISTC - 1200(c)	1-FCV-67-168	ISTC-1200(c)
0-BYV-67-679	ISTA-1100	1-THV-67-606A	ISTC - 1200(c)	1-TV-67-872B	ISTC-1200(a)
0-ISV-67-615A	ISTC-1200(c)	1-THV-67-608A	ISTC - 1200(c)	1-TV-67-891A	ISTC-1200(a)
0-TV-67-616A	ISTC-1200(a)	1-THV-67-609A	ISTC - 1200(c)	1-TV-67-891B	ISTC-1200(a)
0-TV-67-894A	ISTC-1200(a)	1-THV-67-610A	ISTC - 1200(c)	1-TV-67-892A	ISTC-1200(a)
0-TV-67-894B	ISTC-1200(a)	1-THV-67-646A	ISTC - 1200(c)	1-TV-67-892B	ISTC-1200(a)
0-VTV-67-614A	ISTC-1200(a)	1-THV-67-683	ISTC - 1200(c)	1-TV-67-880B	ISTC-1200(a)
1-ISV-67-612A	ISTC - 1200(c)	1-TV-67-868A	ISTC-1200(a)	1-TV-67-881A	ISTC-1200(a)
1-ISV-67-613A	ISTC - 1200(c)	1-TV-67-868B	ISTC-1200(a)	1-TV-67-881B	ISTC-1200(a)
1-ISV-67-642A	ISTC - 1200(c)	1-TV-67-869A	ISTC-1200(a)	1-TV-67-882A	ISTC-1200(a)
1-ISV-67-645A	ISTC - 1200(c)	1-TV-67-869B	ISTC-1200(a)	1-TV-67-882B	ISTC-1200(a)
1-ISV-67-647A	ISTC - 1200(c)	1-TV-67-870A	ISTC-1200(a)	1-TV-67-883A	ISTC-1200(a)
1-ISV-67-600A	ISTC - 1200(c)	1-TV-67-870B	ISTC-1200(a)	1-TV-67-883B	ISTC-1200(a)
1-ISV-67-603A	ISTC - 1200(c)	1-TV-67-871A	ISTC-1200(a)	1-TV-67-884A	ISTC-1200(a)
1-ISV-67-607A	ISTC - 1200(c)	1-TV-67-871B	ISTC-1200(a)	1-TV-67-884B	ISTC-1200(a)
1-ISV-67-620	ISTC-1200(c)	1-TV-67-872A	ISTC-1200(a)	1-TV-67-885A	ISTC-1200(a)
1-ISV-67-621	ISTC-1200(c)	1-TV-67-873A	ISTC-1200(a)	1-TV-67-885B	ISTC-1200(a)
1-ISV-67-624	ISTC-1200(c)	1-TV-67-873B	ISTC-1200(a)	1-TV-67-886A	ISTC-1200(a)
1-ISV-67-602A	ISTC - 1200(c)	1-TV-67-874A	ISTC-1200(a)	1-TV-67-886B	ISTC-1200(a)
0-VTV-67-614B	ISTC-1200(a)	1-TV-67-874B	ISTC-1200(a)	1-TV-67-887A	ISTC-1200(a)
0-TV-67-616B	ISTC-1200(a)	1-TV-67-875A	ISTC-1200(a)	1-TV-67-887B	ISTC-1200(a)
0-ISV-67-615B	ISTC-1200(c)	1-TV-67-875B	ISTC-1200(a)	1-TV-67-888A	ISTC-1200(a)
0-TV-67-617B	ISTC-1200(a)	1-TV-67-879A	ISTC-1200(a)	1-TV-67-888B	ISTC-1200(a)

Appendix I - Valves Exempt from the IST Program

VALVE ID	EXEMPTION BASIS
1-ISV-67-622	ISTC-1200(c)
1-ISV-67-623	ISTC-1200(c)
1-ISV-67-625	ISTC-1200(c)
1-ISV-67-639	ISTC - 1200(c)
1-ISV-67-641	ISTC - 1200(c)
1-ISV-67-607B	ISTC - 1200(c)
1-ISV-67-603B	ISTC - 1200(c)
1-ISV-67-600B	ISTC - 1200(c)
1-ISV-67-645B	ISTC - 1200(c)
1-ISV-67-642B	ISTC - 1200(c)
1-ISV-67-644B	ISTC - 1200(c)
1-ISV-67-613B	ISTC - 1200(c)

VALVE ID	EXEMPTION BASIS
1-TV-67-879B	ISTC-1200(a)
1-TV-67-880A	ISTC-1200(a)
1-THV-67-610B	ISTC - 1200(c)
1-THV-67-609B	ISTC - 1200(c)
1-THV-67-608B	ISTC - 1200(c)
1-THV-67-606B	ISTC - 1200(c)
1-ISV-67-647B	ISTC - 1200(c)
1-THV-67-605B	ISTC - 1200(c)
1-THV-67-604B	ISTC - 1200(c)
1-THV-67-601B	ISTC - 1200(c)
1-THV-67-643B	ISTC - 1200(c)
1-THV-67-611B	ISTC - 1200(c)
1-THV-67-640	ISTC - 1200(c)

VALVE ID	EXEMPTION BASIS
1-TV-67-896A	ISTC-1200(a)
1-TV-67-896B	ISTC-1200(a)
1-TV-67-897A	ISTC-1200(a)
1-TV-67-897B	ISTC-1200(a)
1-THV-67-646B	ISTC-1200(b)
1-FCV-67-170	ISTC-1200(c)
0-TCV-67-1052	ISTC-1200(b)
1-ISV-67-602B	ISTC-1200(c)
1-FCV-67-190	ISTC-1200(c)
1-ISV-67-554B	ISTC-1200(c)
1-ISV-67-612B	ISTC-1200(c)
1-ISV-67-715B	ISTA-1100
1-FCV-67-172	ISTC-1200(c)

Flow Diagram: 1-47W850-9

VALVE ID	EXEMPTION BASIS
1-TV-26-1258	ISTC - 1200(a)
1-TV-26-1293	ISTC - 1200(a)

VALVE ID	EXEMPTION BASIS
1-FCV-26-245	ISTA-1100
1-FCV-26-241	ISTA-1100

VALVE ID	EXEMPTION BASIS
1-FCV-26-242	ISTA-1100
1-FCV-26-244	ISTA-1100

Flow Diagram: 1-47W859-2

VALVE ID	EXEMPTION BASIS
1-RTV-70-292A	ISTC - 1200(a)
1-RTV-70-293A	ISTC - 1200(a)
1-RTV-70-294A	ISTA-1100
1-RTV-70-295A	ISTA-1100
1-RTV-70-296A	ISTA-1100
1-RTV-70-297A	ISTA-1100
1-RTV-70-298A	ISTA-1100
1-RTV-70-299A	ISTA-1100
1-RTV-70-300A	ISTA-1100
1-RTV-70-301A	ISTA-1100
1-RTV-70-302A	ISTA-1100
1-RTV-70-303A	ISTA-1100
1-RTV-70-304A	ISTA-1100
1-RTV-70-305A	ISTA-1100
1-RTV-70-306A	ISTA-1100

VALVE ID	EXEMPTION BASIS
1-RTV-70-316A	ISTA-1100
1-RTV-70-317A	ISTA-1100
1-RTV-70-318A	ISTA-1100
1-RTV-70-319A	ISTA-1100
1-RTV-70-320A	ISTA-1100
1-RTV-70-321A	ISTA-1100
1-RTV-70-322A	ISTA-1100
1-RTV-70-323A	ISTA-1100
1-RTV-70-324A	ISTA-1100
1-RTV-70-325A	ISTA-1100
1-RTV-70-326A	ISTA-1100
1-RTV-70-327A	ISTA-1100
1-RTV-70-328A	ISTA-1100
1-RTV-70-329A	ISTA-1100
1-RTV-70-330A	ISTA-1100

VALVE ID	EXEMPTION BASIS
1-TCV-70-192	ISTA-1100
1-ISV-70-574	ISTA-1100
1-VTV-70-575	ISTC - 1200(a)
1-THV-70-577	ISTA-1100
1-VTV-70-582A	ISTC - 1200(a)
1-VTV-70-583	ISTC - 1200(a)
1-ISV-70-587	ISTC-1200(c)
0-ISV-70-616	ISTC-1200(c)
0-ISV-70-636	ISTC-1200(c)
1-ISV-70-637	ISTA-1100
1-ISV-70-661	ISTA-1100
1-ISV-70-662	ISTA-1100
1-ISV-70-669	ISTA-1100
1-CKV-70-671	ISTA-1100
1-CKV-70-676A	ISTA-1100

Appendix I - Valves Exempt from the IST Program

VALVE ID	EXEMPTION BASIS
1-RTV-70-307A	ISTA-1100
1-RTV-70-308A	ISTA-1100
1-RTV-70-309A	ISTA-1100
1-RTV-70-310A	ISTA-1100
1-RTV-70-311A	ISTA-1100
1-RTV-70-312A	ISTA-1100
1-RTV-70-313A	ISTA-1100
1-RTV-70-314A	ISTA-1100
1-RTV-70-315A	ISTA-1100
1-ISV-70-573	ISTC - 1200(c)
1-DRV-70-576	ISTC-1200(a)
1-DRV-70-579	ISTC-1200(a)
1-DRV-70-580	ISTC-1200(a)
1-ISV-70-581	ISTC - 1200(c)
1-DRV-70-582B	ISTC-1200(a)
1-ISV-70-585	ISTC - 1200(c)
1-ISV-70-588	ISTC - 1200(c)
1-ISV-70-600	ISTC - 1200(c)
0-ISV-70-602	ISTC - 1200(a)
1-ISV-70-670	ISTC - 1200(c)
1-ISV-70-673A	ISTC - 1200(c)
1-ISV-70-673B	ISTC - 1200(c)
1-ISV-70-677A	ISTC - 1200(c)
1-ISV-70-677B	ISTC - 1200(c)
1-ISV-70-680	ISTC - 1200(c)
1-ISV-70-688	ISTC - 1200(c)
1-DRV-70-689	ISTC-1200(a)
1-ISV-70-690	ISTC - 1200(c)
1-DRV-70-699	ISTC-1200(a)
1-DRV-70-701	ISTC-1200(a)
1-DRV-70-704	ISTC-1200(a)
1-DRV-70-733	ISTC-1200(a)
1-DRV-70-760	ISTC-1200(a)
1-DRV-70-761	ISTC-1200(a)
1-DRV-70-762	ISTC-1200(a)

VALVE ID	EXEMPTION BASIS
1-RTV-70-331A	ISTA-1100
1-RTV-70-334A	ISTA-1100
1-RTV-70-335A	ISTA-1100
1-RTV-70-336A	ISTA-1100
1-RTV-70-337A	ISTA-1100
1-RTV-70-338A	ISTC - 1200(a)
1-RTV-70-339A	ISTC - 1200(a)
1-RTV-70-373A	ISTC - 1200(a)
1-RTV-70-374A	ISTC - 1200(a)
1-RTV-70-375A	ISTC - 1200(a)
1-RTV-70-376A	ISTC - 1200(a)
1-RTV-70-387A	ISTC - 1200(a)
1-RTV-70-388A	ISTC - 1200(a)
1-RTV-70-389A	ISTC - 1200(a)
1-RTV-70-390A	ISTC - 1200(a)
1-THV-70-586	ISTC - 1200(c)
1-TV-70-678A	ISTC - 1200(a)
1-TV-70-678C	ISTC - 1200(a)
1-THV-70-684A	ISTC - 1200(c)
1-THV-70-684B	ISTC - 1200(c)
1-THV-70-684C	ISTC - 1200(c)
1-THV-70-684D	ISTC - 1200(c)
1-TV-70-686A	ISTC - 1200(a)
1-TV-70-686B	ISTC - 1200(a)
1-TV-70-691A	ISTC - 1200(a)
1-TV-70-691C	ISTC - 1200(a)
1-THV-70-695A	ISTC - 1200(c)
1-THV-70-695B	ISTC - 1200(c)
1-THV-70-695C	ISTC - 1200(c)
1-THV-70-695D	ISTC - 1200(c)
1-THV-70-696A	ISTC - 1200(c)
1-THV-70-696B	ISTC - 1200(c)
1-THV-70-696C	ISTC - 1200(c)
1-THV-70-696D	ISTC - 1200(c)
1-THV-70-773	ISTC - 1200(c)

VALVE ID	EXEMPTION BASIS
1-CKV-70-676B	ISTA-1100
1-TV-70-678B	ISTC-1200(a)
1-VTV-70-678D	ISTC - 1200(a)
1-VTV-70-678E	ISTC - 1200(a)
1-VTV-70-685A	ISTC - 1200(a)
1-VTV-70-685B	ISTC - 1200(a)
1-VTV-70-691D	ISTC - 1200(a)
1-VTV-70-691E	ISTC - 1200(a)
1-ISV-70-693	ISTA-1100
1-VTV-70-697A	ISTC - 1200(a)
1-VTV-70-697B	ISTC - 1200(a)
1-TV-70-697C	ISTC-1200(a)
1-TV-70-697D	ISTC - 1200(a)
1-ISV-70-700	ISTC-1200(c)
1-THV-70-702	ISTA-1100
1-TV-70-702A	ISTC - 1200(a)
1-TV-70-702B	ISTC - 1200(a)
1-TV-70-702C	ISTC-1200(a)
1-TV-70-702D	ISTC - 1200(a)
1-VTV-70-702E	ISTC - 1200(a)
1-VTV-70-702F	ISTC - 1200(a)
1-ISV-70-705	ISTA-1100
1-VTV-70-706	ISTC - 1200(a)
1-TV-70-722A	ISTC - 1200(a)
1-TV-70-722B	ISTC-1200(a)
1-ISV-70-734	ISTA-1100
1-TV-70-735	ISTC-1200(a)
1-ISV-70-736	ISTA-1100
1-TV-70-737	ISTC-1200(a)
1-VTV-70-738	ISTC - 1200(a)
1-ISV-70-742	ISTC-1200(c)
1-THV-70-743A	ISTA-1100
1-THV-70-743B	ISTA-1100
1-VTV-70-744	ISTC-1200(a)
1-ISV-70-745	ISTC-1200(c)

Appendix I - Valves Exempt from the IST Program

VALVE ID	EXEMPTION BASIS	VALVE ID	EXEMPTION BASIS	VALVE ID	EXEMPTION BASIS
1-DRV-70-763	ISTC-1200(a)	1-VTV-70-774	ISTC - 1200(a)	1-RFV-70-746	ISTA-1100
1-DRV-70-767	ISTC - 1200(a)	1-VTV-70-778	ISTC - 1200(a)	1-VTV-70-759	ISTC - 1200(a)
1-DRV-70-769	ISTA-1100	1-RTV-70-779	ISTC - 1200(a)	1-VTV-70-768	ISTC - 1200(a)
1-DRV-70-771	ISTC-1200(a)	1-RTV-70-780	ISTC - 1200(a)	1-ISV-70-775	ISTC-1200(c)
1-ISV-70-772	ISTC - 1200(c)	1-RTV-70-332A	ISTA-1100	1-ISV-70-777	ISTA-1100
1-DRV-70-791	ISTC-1200(a)	1-RTV-70-333A	ISTA-1100	1-THV-70-781	ISTC-1200(c)
				1-ISV-70-789	ISTA-1100

Flow Diagram: 1-47W866-1

VALVE ID	EXEMPTION BASIS	VALVE ID	EXEMPTION BASIS	VALVE ID	EXEMPTION BASIS
0-RTV-65-302A	ISTC - 1200(a)	0-RTV-65-300A	ISTC - 1200(a)	0-RTV-65-301A	ISTC - 1200(a)
				0-RTV-65-303A	ISTC - 1200(a)

Flow Diagram: 1-47W880-1

VALVE ID	EXEMPTION BASIS	VALVE ID	EXEMPTION BASIS	VALVE ID	EXEMPTION BASIS
1-ISV-82-700A2	ISTC-1200(c)	1-CKV-82-704A2	ISTC-1200skid	1-CKV-82-708A1	ISTC-1200skid
1-ISV-82-700A1	ISTC-1200(c)	1-CKV-82-703A1	ISTC-1200skid	1-CKV-82-708A2	ISTC-1200skid
1-CKV-82-705A1	ISTC-1200skid	1-CKV-82-703A2	ISTC-1200skid	1-RFV-82-A2	ISTC-1200skid
1-CKV-82-705A2	ISTC-1200skid	1-CKV-82-702A1	ISTC-1200skid	1-RFV-82-A1	ISTC-1200skid
1-CKV-82-704A1	ISTC-1200skid	1-CKV-82-702A2	ISTC-1200skid	1-RFV-82-B1	ISTC-1200skid

Flow Diagram: 1-47W880-2

VALVE ID	EXEMPTION BASIS	VALVE ID	EXEMPTION BASIS	VALVE ID	EXEMPTION BASIS
1-ISV-82-700B2	ISTC-1200(c)	1-CKV-82-704B1	ISTC-1200skid	1-CKV-82-703B1	ISTC-1200skid
1-ISV-82-700B1	ISTC-1200(c)	1-CKV-82-704B2	ISTC-1200skid	1-CKV-82-703B2	ISTC-1200skid
1-CKV-82-705B1	ISTC-1200skid	1-CKV-82-702B1	ISTC-1200skid	1-CKV-82-708B1	ISTC-1200skid
1-CKV-82-705B2	ISTC-1200skid	1-CKV-82-702B2	ISTC-1200skid	1-CKV-82-708B2	ISTC-1200skid
				1-RFV-82-B2	ISTC-1200skid

Flow Diagram: 1-47W881-1

VALVE ID	EXEMPTION BASIS	VALVE ID	EXEMPTION BASIS	VALVE ID	EXEMPTION BASIS
1-RTV-82-722A1A	ISTC-1200(a)	1-RTV-82-722A1B	ISTC-1200(a)	1-TCV-82-721A2	ISTC-1200skid
1-RTV-82-722A2A	ISTC-1200(a)	1-RTV-82-722A2B	ISTC-1200(a)	1-DRV-82-A1	ISTC-1200(a)
		1-TCV-82-721A1	ISTC-1200skid	1-DRV-82-A2	ISTC-1200(a)

Appendix I - Valves Exempt from the IST Program

Flow Diagram: 1-47W881-2

VALVE ID	EXEMPTION BASIS	VALVE ID	EXEMPTION BASIS	VALVE ID	EXEMPTION BASIS
1-RTV-82-722AB1B	ISTC-1200(a)	1-RTV-82-722AB1A	ISTC-1200(a)	1-TCV-82-721B2	ISTC-1200skid
1-RTV-82-722AB2B	ISTC-1200(a)	1-RTV-82-722AB2A	ISTC-1200(a)	1-DRV-82-B1	ISTC-1200(a)
		1-TCV-82-721B1	ISTC-1200skid	1-DRV-82-B2	ISTC-1200(a)

Flow Diagram: 2-47W600-105

VALVE ID	EXEMPTION BASIS	VALVE ID	EXEMPTION BASIS	VALVE ID	EXEMPTION BASIS
2-TTIV-90-106D	ISTA-1100	2-TTIV-90-112D	ISTA-1100	2-TTIV-90-106C	ISTA-1100
				2-TTIV-90-112C	ISTA-1100

Flow Diagram: 2-47W600-114

VALVE ID	EXEMPTION BASIS	VALVE ID	EXEMPTION BASIS	VALVE ID	EXEMPTION BASIS
2-ISIV-62-335C	ISTC-1200(a)	2-VTIV-62-335B	ISTC-1200(a)	2-VTIV-67-832B	ISTC-1200(a)
2-DRIV-62-335D	ISTC - 1200(a)	2-VTIV-62-336B	ISTC-1200(a)	2-VTIV-67-832C	ISTC-1200(a)
2-ISIV-62-336C	ISTC-1200(a)	2-VTIV-62-337B	ISTC-1200(a)	2-ISIV-67-832C	ISTC-1200(a)
2-DRIV-62-336E	ISTC - 1200(a)	2-DRIV-67-832E	ISTC - 1200(a)	2-ISIV-67-832D	ISTC-1200(a)
2-EQIV-62-336F	ISTC - 1200(a)	2-DRIV-67-832F	ISTC - 1200(a)	2-EQIV-67-832F	ISTC - 1200(a)
2-ISIV-62-337C	ISTC-1200(a)	2-DRIV-67-833D	ISTC - 1200(a)	2-ISIV-67-833B	ISTC-1200(a)
2-DRIV-62-337E	ISTC - 1200(a)	2-DRIV-67-833E	ISTC - 1200(a)	2-ISIV-67-833C	ISTC-1200(a)
				2-EQIV-67-833E	ISTC - 1200(a)

Flow Diagram: 2-47W600-115

VALVE ID	EXEMPTION BASIS	VALVE ID	EXEMPTION BASIS	VALVE ID	EXEMPTION BASIS
2-DRIV-62-333D	ISTC - 1200(a)	2-ISIV-62-333C	ISTC-1200(a)	2-VTIV-62-333B	ISTC-1200(a)
2-DRIV-62-334D	ISTC - 1200(a)	2-ISIV-62-334C	ISTC-1200(a)	2-VTIV-62-334B	ISTC-1200(a)
		2-DRIV-62-356C	ISTC - 1200(a)	2-ISIV-62-356B	ISTC-1200(a)

Flow Diagram: 2-47W600-116

VALVE ID	EXEMPTION BASIS	VALVE ID	EXEMPTION BASIS	VALVE ID	EXEMPTION BASIS
2-DRIV-72-206D/1	ISTC - 1200(a)	2-ISIV-72-205C/2	ISTC-1200(a)	2-ISIV-72-205C/1	ISTC-1200(a)
2-ISIV-70-280B	ISTC-1200(a)	2-DRIV-72-205D/1	ISTC - 1200(a)	2-VTIV-72-206B	ISTC-1200(a)
2-DRIV-70-280D	ISTC - 1200(a)	2-DRIV-72-205D/2	ISTC - 1200(a)	2-ISIV-72-206C/1	ISTC-1200(a)
2-ISIV-70-281B	ISTC-1200(a)	2-DRIV-72-206E/2	ISTC - 1200(a)	2-ISIV-72-206C/2	ISTC-1200(a)
2-DRIV-70-281D	ISTC - 1200(a)	2-DRIV-72-207E	ISTC - 1200(a)	2-VTIV-72-207B	ISTC-1200(a)
2-EQIV-70-281E	ISTC - 1200(a)	2-EQIV-72-207F	ISTC - 1200(a)	2-ISIV-72-207C	ISTC-1200(a)

Appendix I - Valves Exempt from the IST Program

Flow Diagram: 2-47W600-117

VALVE ID	EXEMPTION BASIS	VALVE ID	EXEMPTION BASIS	VALVE ID	EXEMPTION BASIS
2-DRIV-62-96C/H	ISTC - 1200(a)	2-ISIV-62-96A/H	ISTC-1200(a)	2-ISIV-62-96B/L	ISTC-1200(a)
2-DRIV-62-96C/L	ISTC - 1200(a)	2-ISIV-62-96A/L	ISTC-1200(a)	2-ISIV-62-97A/H	ISTC-1200(a)
2-DRIV-62-97C/H	ISTC - 1200(a)	2-ISIV-62-96B/H	ISTC-1200(a)	2-ISIV-62-97A/L	ISTC-1200(a)
2-DRIV-62-97C/L	ISTC - 1200(a)	2-EQIV-62-96D	ISTC - 1200(a)	2-ISIV-62-97B/H	ISTC-1200(a)
2-DRIV-62-354D	ISTC - 1200(a)	2-EQIV-62-97D	ISTC - 1200(a)	2-ISIV-62-97B/L	ISTC-1200(a)
2-DRIV-62-355D	ISTC - 1200(a)	2-ISIV-62-354C	ISTC-1200(a)	2-VTIV-62-354B	ISTC-1200(a)
		2-ISIV-62-355C	ISTC-1200(a)	2-VTIV-62-355B	ISTC-1200(a)

Flow Diagram: 2-47W600-118

VALVE ID	EXEMPTION BASIS	VALVE ID	EXEMPTION BASIS	VALVE ID	EXEMPTION BASIS
2-DRIV-62-344D	ISTC - 1200(a)	2-RTV-62-349A	ISTC - 1200(a)	2-VTIV-62-341B	ISTC-1200(a)
2-DRIV-62-349D	ISTC - 1200(a)	2-ISIV-62-350C	ISTC-1200(a)	2-ISIV-62-341C/1	ISTC-1200(a)
2-DRIV-62-350D	ISTC - 1200(a)	2-ISIV-62-351C/1	ISTC-1200(a)	2-ISIV-62-341C/2	ISTC-1200(a)
2-DRIV-62-351D/1	ISTC - 1200(a)	2-ISIV-62-351C/2	ISTC-1200(a)	2-VTIV-62-350B	ISTC-1200(a)
		2-DRIV-62-351D/2	ISTC - 1200(a)	2-VTIV-62-351B	ISTC-1200(a)

Flow Diagram: 2-47W600-124

VALVE ID	EXEMPTION BASIS	VALVE ID	EXEMPTION BASIS	VALVE ID	EXEMPTION BASIS
2-VTIV-63-345B	ISTC-1200(a)	2-ISIV-63-345C/1	ISTC-1200(a)	2-ISIV-63-346C/1	ISTC-1200(a)
2-VTIV-63-346B	ISTC-1200(a)	2-ISIV-63-345C/2	ISTC-1200(a)	2-ISIV-63-346C/2	ISTC-1200(a)

Flow Diagram: 2-47W600-129

VALVE ID	EXEMPTION BASIS	VALVE ID	EXEMPTION BASIS	VALVE ID	EXEMPTION BASIS
2-DRIV-62-347E	ISTC - 1200(a)	2-VTIV-62-347B	ISTA-1100	2-ISIV-3-322C/3	ISTC - 1200(a)
2-EQIV-62-347F	ISTC - 1200(a)	2-VTIV-62-348B	ISTA-1100	2-ISIV-62-347C	ISTA-1100
2-DRIV-62-348E	ISTC - 1200(a)	2-ISIV-62-348C	ISTA-1100	2-VTIV-3-363B	ISTC - 1200(a)
				2-ISIV-3-363C	ISTC - 1200(a)

Appendix I - Valves Exempt from the IST Program

Flow Diagram: 2-47W600-131

VALVE ID	EXEMPTION BASIS
2-ISIV-70-267B	ISTC-1200(a)
2-DRIV-70-267D	ISTC - 1200(a)
2-EQIV-70-267E	ISTC - 1200(a)
2-ISIV-70-268B	ISTC-1200(a)
2-DRIV-70-268D	ISTC - 1200(a)
2-DRIV-70-310D	ISTC - 1200(a)
2-DRIV-70-311D	ISTC - 1200(a)
2-DRIV-70-312D	ISTC - 1200(a)
2-DRIV-70-313D	ISTC - 1200(a)

VALVE ID	EXEMPTION BASIS
2-DRIV-72-213D/1	ISTC - 1200(a)
2-DRIV-72-214E	ISTC - 1200(a)
2-VTIV-70-310B	ISTC-1200(a)
2-ISIV-70-310C	ISTC-1200(a)
2-VTIV-70-311B	ISTC-1200(a)
2-ISIV-70-311C	ISTC-1200(a)
2-VTIV-70-312B	ISTC-1200(a)
2-ISIV-70-312C	ISTC-1200(a)
2-VTIV-70-313B	ISTC-1200(a)
2-ISIV-70-313C	ISTC-1200(a)

VALVE ID	EXEMPTION BASIS
2-VTIV-72-212B	ISTC-1200(a)
2-ISIV-72-212C/1	ISTC-1200(a)
2-DRIV-72-212D/1	ISTC - 1200(a)
2-VTIV-72-213B	ISTC-1200(a)
2-ISIV-72-213C/1	ISTC-1200(a)
2-ISIV-72-213C/2	ISTC-1200(a)
2-DRIV-72-213E/2	ISTC - 1200(a)
2-VTIV-72-214B	ISTC-1200(a)
2-ISIV-72-214C	ISTC-1200(a)
2-EQIV-72-214F	ISTC - 1200(a)

Flow Diagram: 2-47W600-132

VALVE ID	EXEMPTION BASIS
2-DRIV-70-314D/1	ISTC - 1200(a)
2-DRIV-70-314D/2	ISTC - 1200(a)
2-EQIV-70-314E/1	ISTC - 1200(a)
2-EQIV-70-314E/2	ISTC - 1200(a)
2-DRIV-70-315D/1	ISTC - 1200(a)
2-DRIV-70-315D/2	ISTC - 1200(a)
2-DRIV-70-375D	ISTC - 1200(a)
2-DRIV-70-376D	ISTC - 1200(a)

VALVE ID	EXEMPTION BASIS
2-DRIV-72-201D	ISTC - 1200(a)
2-ISIV-70-314B/1	ISTC-1200(a)
2-ISIV-70-314B/2	ISTC-1200(a)
2-ISIV-70-315B/1	ISTC-1200(a)
2-ISIV-70-315B/2	ISTC-1200(a)
2-ISIV-70-375B	ISTC-1200(a)
2-EQIV-70-375E	ISTC - 1200(a)
2-ISIV-70-376B	ISTC-1200(a)

VALVE ID	EXEMPTION BASIS
2-ISIV-72-201B	ISTC-1200(a)
2-ISIV-72-202B	ISTC-1200(a)
2-DRIV-72-202D	ISTC - 1200(a)
2-EQIV-72-202E	ISTC - 1200(a)
2-ISIV-72-208B	ISTC-1200(a)
2-DRIV-72-208D	ISTC - 1200(a)
2-ISIV-72-209B	ISTC-1200(a)
2-DRIV-72-209D	ISTC - 1200(a)
2-EQIV-72-209E	ISTC - 1200(a)

Appendix I - Valves Exempt from the IST Program

Flow Diagram: 2-47W600-134

VALVE ID	EXEMPTION BASIS
2-DRIV-70-269D	ISTC - 1200(a)
2-DRIV-70-270D	ISTC - 1200(a)
2-DRIV-70-282D	ISTC - 1200(a)
2-DRIV-70-283D	ISTC - 1200(a)
2-DRIV-70-292D	ISTC - 1200(a)
2-DRIV-70-293D	ISTC - 1200(a)
2-DRIV-70-334D	ISTC - 1200(a)
2-DRIV-70-335D	ISTC - 1200(a)
2-DRIV-70-336D/1	ISTC - 1200(a)
2-DRIV-70-336D/2	ISTC - 1200(a)
2-DRIV-70-337D/1	ISTC - 1200(a)

VALVE ID	EXEMPTION BASIS
2-ISIV-70-269B	ISTC-1200(a)
2-EQIV-70-269E	ISTC - 1200(a)
2-ISIV-70-270B	ISTC-1200(a)
2-EQIV-70-283E	ISTC - 1200(a)
2-EQIV-70-292E	ISTC - 1200(a)
2-EQIV-70-335E	ISTC - 1200(a)
2-EQIV-70-336E/1	ISTC - 1200(a)
2-EQIV-70-336E/2	ISTC - 1200(a)
2-DRIV-70-337D/2	ISTC - 1200(a)
2-DRIV-70-338D	ISTC - 1200(a)
2-EQIV-70-338E	ISTC - 1200(a)
2-DRIV-70-339D	ISTC - 1200(a)

VALVE ID	EXEMPTION BASIS
2-ISIV-70-282B	ISTC-1200(a)
2-ISIV-70-283B	ISTC-1200(a)
2-ISIV-70-292B	ISTC-1200(a)
2-ISIV-70-293B	ISTC-1200(a)
2-ISIV-70-334B	ISTC-1200(a)
2-ISIV-70-335B	ISTC-1200(a)
2-ISIV-70-336B/1	ISTC-1200(a)
2-ISIV-70-336B/2	ISTC-1200(a)
2-ISIV-70-337B/1	ISTC-1200(a)
2-ISIV-70-337B/2	ISTC-1200(a)
2-ISIV-70-338B	ISTC-1200(a)
2-ISIV-70-339B	ISTC-1200(a)

Flow Diagram: 2-47W600-135

VALVE ID	EXEMPTION BASIS
2-ISIV-70-215A/BH	ISTA-1100
2-ISIV-70-215A/BL	ISTA-1100

VALVE ID	EXEMPTION BASIS
2-RTV-70-215AAAH	ISTA-1100
2-ISIV-70-215B/CH	ISTA-1100
2-ISIV-70-215B/CL	ISTA-1100

VALVE ID	EXEMPTION BASIS
2-RTV-70-215AAAL	ISTA-1100
2-RTV-70-215ABAH	ISTA-1100
2-RTV-70-215ABAL	ISTA-1100

Flow Diagram: 2-47W600-136

VALVE ID	EXEMPTION BASIS
2-DRIV-63-305D	ISTC - 1200(a)
2-EQIV-63-305E	ISTC - 1200(a)
2-DRIV-63-306D	ISTC - 1200(a)
2-DRIV-63-307D	ISTC - 1200(a)
2-EQIV-63-307E	ISTC - 1200(a)
2-DRIV-63-308D	ISTC - 1200(a)
2-ISIV-63-342B	ISTC-1200(a)
2-DRIV-63-342D	ISTC - 1200(a)
2-DRIV-63-343D	ISTC - 1200(a)

VALVE ID	EXEMPTION BASIS
2-DRIV-70-271C	ISTC - 1200(a)
2-DRIV-70-272D/1	ISTC - 1200(a)
2-DRIV-70-272D/2	ISTC - 1200(a)
2-ISIV-63-305B	ISTC-1200(a)
2-ISIV-63-306B	ISTC-1200(a)
2-ISIV-63-307B	ISTC-1200(a)
2-ISIV-63-308B	ISTC-1200(a)
2-EQIV-63-342E	ISTC - 1200(a)
2-ISIV-63-343B	ISTC-1200(a)

VALVE ID	EXEMPTION BASIS
2-ISIV-70-258B	ISTC-1200(a)
2-ISIV-70-271B	ISTC-1200(a)
2-ISIV-70-272B/1	ISTC-1200(a)
2-ISIV-70-272B/2	ISTC-1200(a)
2-EQIV-70-272E/1	ISTC - 1200(a)
2-EQIV-70-272E/2	ISTC - 1200(a)
2-ISIV-70-273B/1	ISTC-1200(a)
2-ISIV-70-273B/2	ISTC-1200(a)
2-DRIV-70-273D/1	ISTC - 1200(a)
2-DRIV-70-273D/2	ISTC - 1200(a)

Appendix I - Valves Exempt from the IST Program

Flow Diagram: 2-47W600-137

VALVE ID	EXEMPTION BASIS	VALVE ID	EXEMPTION BASIS	VALVE ID	EXEMPTION BASIS
2-DRIV-70-285D/1	ISTC - 1200(a)	2-ISIV-70-285B/1	ISTC-1200(a)	2-ISIV-70-284B	ISTC-1200(a)
2-DRIV-70-285D/2	ISTC - 1200(a)	2-ISIV-70-285B/2	ISTC-1200(a)	2-ISIV-70-286B/1	ISTC-1200(a)
2-DRIV-70-286D/1	ISTC - 1200(a)	2-EQIV-70-285E/1	ISTC - 1200(a)	2-ISIV-70-286B/2	ISTC-1200(a)
2-DRIV-70-286D/2	ISTC - 1200(a)	2-EQIV-70-285E/2	ISTC - 1200(a)	2-ISIV-70-289B	ISTC-1200(a)
2-DRIV-70-289C	ISTC - 1200(a)	2-EQIV-70-290E	ISTC - 1200(a)	2-ISIV-70-290B	ISTC-1200(a)
2-DRIV-70-290D	ISTC - 1200(a)	2-DRIV-70-291D	ISTC - 1200(a)	2-ISIV-70-291B	ISTC-1200(a)

Flow Diagram: 2-47W600-142

VALVE ID	EXEMPTION BASIS	VALVE ID	EXEMPTION BASIS	VALVE ID	EXEMPTION BASIS
2-DRIV-63-377D	ISTC - 1200(a)	2-ISIV-63-377C	ISTC-1200(a)	2-VTIV-63-377B	ISTC-1200(a)
2-DRIV-63-378D/1	ISTC - 1200(a)	2-ISIV-63-378C/1	ISTC-1200(a)	2-VTIV-63-378B	ISTC-1200(a)
2-DRIV-63-378D/2	ISTC - 1200(a)	2-ISIV-63-378C/2	ISTC-1200(a)	2-VTIV-63-379B	ISTC-1200(a)
2-DRIV-63-379D	ISTC - 1200(a)	2-ISIV-63-379C	ISTC-1200(a)	2-VTIV-63-380B	ISTC-1200(a)
2-DRIV-63-380D/1	ISTC - 1200(a)	2-DRIV-63-380D/2	ISTC - 1200(a)	2-ISIV-63-380C/1	ISTC-1200(a)
				2-ISIV-63-380C/2	ISTC-1200(a)

Flow Diagram: 2-47W600-154

VALVE ID	EXEMPTION BASIS	VALVE ID	EXEMPTION BASIS	VALVE ID	EXEMPTION BASIS
2-DRIV-63-303D	ISTC - 1200(a)	2-ISIV-63-303C	ISTC-1200(a)	2-VTIV-63-303B	ISTC-1200(a)
2-DRIV-63-304D	ISTC - 1200(a)	2-ISIV-63-304C	ISTC-1200(a)	2-VTIV-63-304B	ISTC-1200(a)
2-DRIV-63-309D/1	ISTC - 1200(a)	2-ISIV-63-309B/1	ISTC-1200(a)	2-ISIV-63-309B/2	ISTC-1200(a)
2-DRIV-63-309D/2	ISTC - 1200(a)	2-EQIV-63-309E/1	ISTC - 1200(a)	2-ISIV-63-310B/1	ISTC-1200(a)
2-DRIV-63-310D/1	ISTC - 1200(a)	2-EQIV-63-309E/2	ISTC - 1200(a)	2-ISIV-63-310B/2	ISTC-1200(a)
2-DRIV-63-310D/2	ISTC - 1200(a)	2-DRIV-63-344D	ISTC - 1200(a)	2-VTIV-63-344B	ISTC-1200(a)
				2-ISIV-63-344C	ISTC-1200(a)

Flow Diagram: 2-47W600-156

VALVE ID	EXEMPTION BASIS	VALVE ID	EXEMPTION BASIS	VALVE ID	EXEMPTION BASIS
2-ISIV-63-349C	ISTC-1200(a)	2-ISIV-63-350C	ISTC-1200(a)	2-VTIV-63-349B	ISTC-1200(a)
				2-VTIV-63-350B	ISTC-1200(a)

Appendix I - Valves Exempt from the IST Program

Flow Diagram: 2-47W600-159

VALVE ID	EXEMPTION BASIS
2-DRIV-67-836D	ISTC - 1200(a)
2-DRIV-67-836E	ISTC - 1200(a)
2-DRIV-67-837E	ISTC - 1200(a)
2-DRIV-67-837F	ISTC - 1200(a)
2-DRIV-67-838D	ISTC - 1200(a)
2-DRIV-67-838E	ISTC - 1200(a)
2-DRIV-67-839E	ISTC - 1200(a)
2-DRIV-67-839F	ISTC - 1200(a)
2-DRIV-67-840D	ISTC - 1200(a)
2-DRIV-67-840E	ISTC - 1200(a)
2-DRIV-67-841E	ISTC - 1200(a)
2-DRIV-67-841F	ISTC - 1200(a)
2-DRIV-67-842D	ISTC - 1200(a)
2-DRIV-67-842E	ISTC - 1200(a)
2-DRIV-67-843E	ISTC - 1200(a)
2-DRIV-67-843F	ISTC - 1200(a)

VALVE ID	EXEMPTION BASIS
2-ISIV-67-836B	ISTA-1100
2-ISIV-67-836C	ISTA-1100
2-EQIV-67-836F	ISTC - 1200(a)
2-ISIV-67-837C	ISTA-1100
2-ISIV-67-837D	ISTA-1100
2-EQIV-67-837F	ISTC - 1200(a)
2-ISIV-67-838B	ISTA-1100
2-ISIV-67-838C	ISTA-1100
2-EQIV-67-838F	ISTC - 1200(a)
2-ISIV-67-839C	ISTA-1100
2-ISIV-67-839D/H	ISTA-1100
2-ISIV-67-839E/L	ISTA-1100
2-EQIV-67-839F	ISTC - 1200(a)
2-EQIV-67-840F	ISTC - 1200(a)
2-EQIV-67-841F	ISTC - 1200(a)
2-EQIV-67-842F	ISTC - 1200(a)
2-EQIV-67-843F	ISTC - 1200(a)

VALVE ID	EXEMPTION BASIS
2-VTIV-67-837B	ISTA-1100
2-VTIV-67-837C	ISTA-1100
2-VTIV-67-839B	ISTA-1100
2-VTIV-67-839C	ISTA-1100
2-ISIV-67-839D	ISTA-1100
2-ISIV-67-840B	ISTA-1100
2-ISIV-67-840C	ISTA-1100
2-VTIV-67-841B	ISTA-1100
2-VTIV-67-841C	ISTA-1100
2-ISIV-67-841C	ISTA-1100
2-ISIV-67-841D	ISTA-1100
2-ISIV-67-842B	ISTA-1100
2-ISIV-67-842C	ISTA-1100
2-VTIV-67-843B	ISTA-1100
2-VTIV-67-843C	ISTA-1100
2-ISIV-67-843C	ISTA-1100
2-ISIV-67-843D	ISTA-1100

Flow Diagram: 2-47W600-163

VALVE ID	EXEMPTION BASIS
2-DRIV-70-261D	ISTC - 1200(a)
2-VTIV-63-301B	ISTC-1200(a)
2-ISIV-63-301C	ISTC-1200(a)
2-DRIV-63-301D	ISTC - 1200(a)
2-VTIV-63-302B	ISTC-1200(a)
2-ISIV-63-302C	ISTC-1200(a)
2-DRIV-63-302D	ISTC - 1200(a)

VALVE ID	EXEMPTION BASIS
2-EQIV-70-261E	ISTC - 1200(a)
2-DRIV-70-262D	ISTC - 1200(a)
2-DRIV-70-274D	ISTC - 1200(a)
2-DRIV-70-275D	ISTC - 1200(a)
2-EQIV-70-275E	ISTC - 1200(a)
2-DRIV-70-344D	ISTC - 1200(a)
2-DRIV-70-345D	ISTC - 1200(a)

VALVE ID	EXEMPTION BASIS
2-ISIV-70-261B	ISTC-1200(a)
2-ISIV-70-262B	ISTC-1200(a)
2-ISIV-70-274B	ISTC-1200(a)
2-ISIV-70-275B	ISTC-1200(a)
2-ISIV-70-344B	ISTA-1100
2-EQIV-70-344E	ISTC - 1200(a)
2-ISIV-70-345B	ISTA-1100

Appendix I - Valves Exempt from the IST Program

Flow Diagram: 2-47W600-164

VALVE ID	EXEMPTION BASIS	VALVE ID	EXEMPTION BASIS	VALVE ID	EXEMPTION BASIS
2-DRIV-63-337D/1	ISTC - 1200(a)	2-ISIV-63-337B/1	ISTC-1200(a)	2-VTIV-72-203B	ISTC-1200(a)
2-DRIV-63-337D/2	ISTC - 1200(a)	2-ISIV-63-337B/2	ISTC-1200(a)	2-ISIV-72-203C	ISTC-1200(a)
2-DRIV-63-337D/3	ISTC - 1200(a)	2-ISIV-63-337B/3	ISTC-1200(a)	2-DRIV-72-203D	ISTC - 1200(a)
2-EQIV-63-337F/1	ISTC - 1200(a)	2-EQIV-63-337F/3	ISTC - 1200(a)	2-VTIV-72-204B	ISTC-1200(a)
2-EQIV-63-337F/2	ISTC - 1200(a)	2-ISIV-63-338B/1	ISTC-1200(a)	2-ISIV-72-204C	ISTC-1200(a)
2-DRIV-63-338D/1	ISTC - 1200(a)	2-ISIV-63-338B/2	ISTC-1200(a)	2-DRIV-72-204D	ISTC - 1200(a)
2-DRIV-63-338D/2	ISTC - 1200(a)	2-ISIV-63-338B/3	ISTC-1200(a)	2-VTIV-72-210B	ISTC-1200(a)
2-DRIV-63-338D/3	ISTC - 1200(a)	2-ISIV-63-339B/1	ISTC-1200(a)	2-ISIV-72-210C	ISTC-1200(a)
2-DRIV-63-339D/1	ISTC - 1200(a)	2-ISIV-63-339B/2	ISTC-1200(a)	2-DRIV-72-210D	ISTC - 1200(a)
2-DRIV-63-339D/2	ISTC - 1200(a)	2-ISIV-63-339B/3	ISTC-1200(a)	2-VTIV-72-211B	ISTC-1200(a)
2-DRIV-63-339D/3	ISTC - 1200(a)	2-EQIV-63-339E/1	ISTC - 1200(a)	2-ISIV-72-211C	ISTC-1200(a)
2-DRIV-63-340D/1	ISTC - 1200(a)	2-EQIV-63-339E/2	ISTC - 1200(a)	2-DRIV-72-211D	ISTC - 1200(a)
2-DRIV-63-340D/2	ISTC - 1200(a)	2-EQIV-63-339E/3	ISTC - 1200(a)	2-ISIV-63-340B/2	ISTC-1200(a)
2-DRIV-63-340D/3	ISTC - 1200(a)	2-ISIV-63-340B/1	ISTC-1200(a)	2-ISIV-63-340B/3	ISTC-1200(a)

Flow Diagram: 2-47W600-167

VALVE ID	EXEMPTION BASIS	VALVE ID	EXEMPTION BASIS	VALVE ID	EXEMPTION BASIS
2-DRIV-62-342D/1	ISTC - 1200(a)	2-EQIV-62-342E/1	ISTC - 1200(a)	2-ISIV-62-342B/1	ISTC-1200(a)
2-DRIV-62-342D/2	ISTC - 1200(a)	2-EQIV-62-342E/2	ISTC - 1200(a)	2-ISIV-62-342B/2	ISTC-1200(a)
2-DRIV-62-343D/1	ISTC - 1200(a)	2-DRIV-62-343D/2	ISTC - 1200(a)	2-ISIV-62-343B/1	ISTC-1200(a)
				2-ISIV-62-343B/2	ISTC-1200(a)

Appendix I - Valves Exempt from the IST Program

Flow Diagram: 2-47W600-169

VALVE ID	EXEMPTION BASIS	VALVE ID	EXEMPTION BASIS	VALVE ID	EXEMPTION BASIS
2-DRIV-70-298D	ISTC - 1200(a)	2-ISIV-70-298B	ISTC-1200(a)	2-ISIV-70-301B	ISTC-1200(a)
2-DRIV-70-299D	ISTC - 1200(a)	2-EQIV-70-298E	ISTC - 1200(a)	2-ISIV-70-302B	ISTC-1200(a)
2-DRIV-70-300D	ISTC - 1200(a)	2-ISIV-70-299B	ISTC-1200(a)	2-ISIV-70-303B	ISTC-1200(a)
2-DRIV-70-301D	ISTC - 1200(a)	2-ISIV-70-300B	ISTC-1200(a)	2-ISIV-70-304B	ISTC-1200(a)
2-DRIV-70-302D	ISTC - 1200(a)	2-EQIV-70-300E	ISTC - 1200(a)	2-ISIV-70-305B	ISTC-1200(a)
2-DRIV-70-303D	ISTC - 1200(a)	2-EQIV-70-302E	ISTC - 1200(a)	2-ISIV-70-322B	ISTC-1200(a)
2-DRIV-70-304D	ISTC - 1200(a)	2-EQIV-70-304E	ISTC - 1200(a)	2-ISIV-70-323B	ISTC-1200(a)
2-DRIV-70-305D	ISTC - 1200(a)	2-EQIV-70-322E	ISTC - 1200(a)	2-VTIV-70-324B	ISTC-1200(a)
2-DRIV-70-322D	ISTC - 1200(a)	2-EQIV-70-324F	ISTC - 1200(a)	2-ISIV-70-324C	ISTC-1200(a)
2-DRIV-70-323D	ISTC - 1200(a)	2-DRIV-70-326D	ISTC - 1200(a)	2-VTIV-70-325B	ISTC-1200(a)
2-DRIV-70-324E	ISTC - 1200(a)	2-EQIV-70-326E	ISTC - 1200(a)	2-ISIV-70-326B	ISTC-1200(a)
2-DRIV-70-325E	ISTC - 1200(a)	2-DRIV-70-327D	ISTC - 1200(a)	2-ISIV-70-327B	ISTC-1200(a)

Flow Diagram: 2-47W600-171

VALVE ID	EXEMPTION BASIS	VALVE ID	EXEMPTION BASIS	VALVE ID	EXEMPTION BASIS
2-DRIV-67-844D	ISTC - 1200(a)	2-ISIV-67-844B	ISTA-1100	2-ISIV-67-847C	ISTA-1100
2-DRIV-67-844E	ISTC - 1200(a)	2-ISIV-67-844C	ISTA-1100	2-ISIV-67-847C/L	ISTC-1200(a)
2-EQIV-67-844E	ISTC - 1200(a)	2-ISIV-67-844C/H	ISTC-1200(a)	2-ISIV-67-847D/H	ISTC-1200(a)
2-DRIV-67-845D	ISTC - 1200(a)	2-ISIV-67-844D/L	ISTC-1200(a)	2-ISIV-67-848B	ISTA-1100
2-DRIV-67-845E	ISTC - 1200(a)	2-ISIV-67-845B	ISTA-1100	2-ISIV-67-848C	ISTA-1100
2-EQIV-67-845F	ISTC - 1200(a)	2-ISIV-67-845C	ISTA-1100	2-ISIV-67-848C/H	ISTC-1200(a)
2-DRIV-67-846D	ISTC - 1200(a)	2-ISIV-67-845C/L	ISTC-1200(a)	2-ISIV-67-848D/L	ISTC-1200(a)
2-DRIV-67-846E	ISTC - 1200(a)	2-ISIV-67-845D/H	ISTC-1200(a)	2-ISIV-67-849B	ISTA-1100
2-DRIV-67-847D	ISTC - 1200(a)	2-ISIV-67-846B	ISTA-1100	2-ISIV-67-849C	ISTA-1100
2-DRIV-67-847E	ISTC - 1200(a)	2-ISIV-67-846C	ISTA-1100	2-ISIV-67-849C/L	ISTC-1200(a)
2-DRIV-67-848D	ISTC - 1200(a)	2-ISIV-67-846C/H	ISTC-1200(a)	2-ISIV-67-849D/H	ISTC-1200(a)
2-DRIV-67-848E	ISTC - 1200(a)	2-ISIV-67-846D/L	ISTC-1200(a)	2-ISIV-67-850B	ISTA-1100
2-DRIV-67-849D	ISTC - 1200(a)	2-EQIV-67-846E	ISTC - 1200(a)	2-ISIV-67-850C	ISTA-1100
2-DRIV-67-849E	ISTC - 1200(a)	2-ISIV-67-847B	ISTA-1100	2-ISIV-67-850C/H	ISTC-1200(a)
2-DRIV-67-850D	ISTC - 1200(a)	2-EQIV-67-847F	ISTC - 1200(a)	2-ISIV-67-850D/L	ISTC-1200(a)
2-DRIV-67-850E	ISTC - 1200(a)	2-EQIV-67-848E	ISTC - 1200(a)	2-ISIV-67-851B	ISTA-1100
2-DRIV-67-851D	ISTC - 1200(a)	2-EQIV-67-849F	ISTC - 1200(a)	2-ISIV-67-851C	ISTA-1100
2-DRIV-67-851E	ISTC - 1200(a)	2-EQIV-67-850E	ISTC - 1200(a)	2-ISIV-67-851C/L	ISTC-1200(a)
		2-EQIV-67-851F	ISTC - 1200(a)	2-ISIV-67-851D/H	ISTC-1200(a)

Appendix I - Valves Exempt from the IST Program

Flow Diagram: 2-47W600-174

VALVE ID	EXEMPTION BASIS	VALVE ID	EXEMPTION BASIS	VALVE ID	EXEMPTION BASIS
2-VTIV-63-385B	ISTC-1200(a)	2-DRIV-70-263D	ISTC - 1200(a)	2-ISIV-70-263B	ISTC-1200(a)
2-ISIV-63-385C	ISTC-1200(a)	2-EQIV-70-263E	ISTC - 1200(a)	2-ISIV-70-264B	ISTC-1200(a)
2-DRIV-63-385D	ISTC - 1200(a)	2-DRIV-70-264D	ISTC - 1200(a)	2-ISIV-70-276B	ISTC-1200(a)
2-ISIV-63-386C	ISTC-1200(a)	2-DRIV-70-276D	ISTC - 1200(a)	2-ISIV-70-277B	ISTC-1200(a)
2-DRIV-63-386D	ISTC - 1200(a)	2-DRIV-70-277D	ISTC - 1200(a)	2-EQIV-70-277E	ISTC - 1200(a)
				2-VTIV-63-386B	ISTC-1200(a)

Flow Diagram: 2-47W600-175

VALVE ID	EXEMPTION BASIS	VALVE ID	EXEMPTION BASIS	VALVE ID	EXEMPTION BASIS
2-DRIV-1-270D	ISTC - 1200(a)	2-ISIV-1-270B	ISTC-1200(a)	2-ISIV-1-291B/2	ISTC-1200(a)
2-DRIV-1-271D	ISTC - 1200(a)	2-EQIV-1-270E	ISTC - 1200(a)	2-ISIV-1-299B/2	ISTC-1200(a)
2-DRIV-1-272D	ISTC - 1200(a)	2-ISIV-1-271B	ISTC-1200(a)	2-ISIV-3-332B	ISTC - 1200(a)
2-DRIV-1-273D	ISTC - 1200(a)	2-ISIV-1-272B	ISTC-1200(a)	2-ISIV-3-333B	ISTC - 1200(a)
2-DRIV-1-291C/2	ISTC - 1200(a)	2-EQIV-1-272E	ISTC - 1200(a)	2-ISIV-3-341B	ISTC - 1200(a)
2-DRIV-1-299C/2	ISTC - 1200(a)	2-ISIV-1-273B	ISTC-1200(a)	2-ISIV-3-342B	ISTC - 1200(a)

Flow Diagram: 2-47W600-179

VALVE ID	EXEMPTION BASIS	VALVE ID	EXEMPTION BASIS	VALVE ID	EXEMPTION BASIS
2-VTIV-84-54B	ISTA-1100	2-ISIV-84-54C	ISTA-1100	2-ISIV-84-55C	ISTA-1100
2-VTIV-84-55B	ISTA-1100	2-VTIV-84-56B	ISTA-1100	2-ISIV-84-56C	ISTA-1100
		2-VTIV-84-57B	ISTA-1100	2-ISIV-84-57C	ISTA-1100

Flow Diagram: 2-47W600-181

VALVE ID	EXEMPTION BASIS	VALVE ID	EXEMPTION BASIS	VALVE ID	EXEMPTION BASIS
2-DRIV-62-306D	ISTC - 1200(a)	2-ISIV-62-306B	ISTC-1200(a)	2-VTIV-72-215B	ISTC-1200(a)
2-EQIV-62-306E	ISTC - 1200(a)	2-ISIV-62-307B	ISTC-1200(a)	2-ISIV-72-215C	ISTC-1200(a)
2-DRIV-62-307D	ISTC - 1200(a)	2-ISIV-62-314B	ISTC-1200(a)	2-DRIV-72-215E	ISTC - 1200(a)
2-DRIV-62-314D	ISTC - 1200(a)	2-EQIV-62-314E	ISTC - 1200(a)	2-EQIV-72-215F	ISTC - 1200(a)
2-DRIV-62-315D	ISTC - 1200(a)	2-ISIV-62-315B	ISTC-1200(a)	2-VTIV-72-216B	ISTC-1200(a)
2-DRIV-62-322D	ISTC - 1200(a)	2-ISIV-62-322B	ISTC-1200(a)	2-ISIV-72-216C	ISTC-1200(a)
2-DRIV-62-323D	ISTC - 1200(a)	2-EQIV-62-322E	ISTC - 1200(a)	2-DRIV-72-216E	ISTC - 1200(a)
2-DRIV-62-330D	ISTC - 1200(a)	2-ISIV-62-323B	ISTC-1200(a)	2-ISIV-62-330B	ISTC-1200(a)
2-DRIV-62-331D	ISTC - 1200(a)	2-EQIV-62-330E	ISTC - 1200(a)	2-ISIV-62-331B	ISTC-1200(a)

Appendix I - Valves Exempt from the IST Program

Flow Diagram: 2-47W600-187

VALVE ID	EXEMPTION BASIS	VALVE ID	EXEMPTION BASIS
2-DRIV-62-353D/2	ISTC - 1200(a)	2-ISIV-62-353C/2	ISTC-1200(a)

Flow Diagram: 2-47W600-288

VALVE ID	EXEMPTION BASIS	VALVE ID	EXEMPTION BASIS	VALVE ID	EXEMPTION BASIS
2-VTIV-31-1110B	ISTA-1100	2-ISIV-31-1110C	ISTA-1100	2-VTIV-62-365B	ISTA-1100
2-VTIV-31-1111B	ISTA-1100	2-ISIV-31-1111C	ISTA-1100	2-ISIV-62-365C	ISTA-1100
		2-VTIV-31-1114B	ISTA-1100	2-ISIV-31-1114C	ISTA-1100

Flow Diagram: 2-47W600-290

VALVE ID	EXEMPTION BASIS	VALVE ID	EXEMPTION BASIS	VALVE ID	EXEMPTION BASIS
2-ISIV-62-429B/1	ISTC-1200(a)	2-ISIV-62-423B/1	ISTC-1200(a)	2-ISIV-62-420B	ISTC-1200(a)
2-ISIV-62-429B/2	ISTC-1200(a)	2-ISIV-62-423B/2	ISTC-1200(a)	2-ISIV-62-421B	ISTC-1200(a)
2-ISIV-62-430B/1	ISTC-1200(a)	2-ISIV-62-424B/1	ISTC-1200(a)	2-ISIV-62-426B	ISTC-1200(a)
2-ISIV-62-430B/2	ISTC-1200(a)	2-ISIV-62-424B/2	ISTC-1200(a)	2-ISIV-62-427B	ISTC-1200(a)

Flow Diagram: 2-47W600-30

VALVE ID	EXEMPTION BASIS	VALVE ID	EXEMPTION BASIS	VALVE ID	EXEMPTION BASIS
2-ISIV-1-285B	ISTC-1200(a)	2-ISIV-1-291B/1	ISTC-1200(a)	2-ISIV-1-284B/1	ISTC-1200(a)
2-ISIV-1-290B	ISTC-1200(a)	2-ISIV-1-293B	ISTC-1200(a)	2-ISIV-1-284B/2	ISTC-1200(a)
2-DRIV-1-290C	ISTC - 1200(a)	2-ISIV-1-298B	ISTC-1200(a)	2-ISIV-1-292B/1	ISTC-1200(a)
2-DRIV-1-298C	ISTC - 1200(a)	2-ISIV-1-299B/1	ISTC-1200(a)	2-ISIV-1-292B/2	ISTC-1200(a)

Appendix I - Valves Exempt from the IST Program

Flow Diagram: 2-47W600-307

VALVE ID	EXEMPTION BASIS
2-VTIV-68-401B	ISTC - 1200(a)
2-VTIV-68-402B	ISTC - 1200(a)
2-VTIV-68-403B	ISTC - 1200(a)
2-VTIV-68-404B	ISTC - 1200(a)
2-VTIV-68-411B	ISTC - 1200(a)
2-VTIV-68-412B	ISTC - 1200(a)
2-VTIV-68-413B	ISTC - 1200(a)
2-VTIV-68-414B	ISTC - 1200(a)
2-VTIV-68-424B	ISTC - 1200(a)
2-VTIV-68-431B	ISTC - 1200(a)
2-VTIV-68-432B	ISTC - 1200(a)
2-VTIV-68-433B	ISTC - 1200(a)
2-VTIV-68-434B	ISTC - 1200(a)

VALVE ID	EXEMPTION BASIS
2-ISIV-68-404C/1	ISTC-1200(a)
2-ISIV-68-404C/2	ISTC-1200(a)
2-ISIV-68-404C/3	ISTC-1200(a)
2-ISIV-68-414C/1	ISTC-1200(a)
2-ISIV-68-414C/2	ISTC-1200(a)
2-ISIV-68-414C/3	ISTC-1200(a)
2-VTIV-68-421B	ISTC - 1200(a)
2-VTIV-68-422B	ISTC - 1200(a)
2-VTIV-68-423B	ISTC - 1200(a)
2-ISIV-68-424C/1	ISTC-1200(a)
2-ISIV-68-424C/2	ISTC-1200(a)
2-ISIV-68-424C/3	ISTC-1200(a)
2-ISIV-68-434C/1	ISTC-1200(a)

VALVE ID	EXEMPTION BASIS
2-ISIV-68-401C	ISTC-1200(a)
2-ISIV-68-402C	ISTC-1200(a)
2-ISIV-68-403C	ISTC-1200(a)
2-ISIV-68-411C	ISTC-1200(a)
2-ISIV-68-412C	ISTC-1200(a)
2-ISIV-68-413C	ISTC-1200(a)
2-ISIV-68-421C	ISTC-1200(a)
2-ISIV-68-422C	ISTC-1200(a)
2-ISIV-68-423C	ISTC-1200(a)
2-ISIV-68-431C	ISTC-1200(a)
2-ISIV-68-432C	ISTC-1200(a)
2-ISIV-68-433C	ISTC-1200(a)
2-ISIV-68-434C/2	ISTC-1200(a)
2-ISIV-68-434C/3	ISTC-1200(a)

Flow Diagram: 2-47W600-308

VALVE ID	EXEMPTION BASIS
2-ISIV-1-286B/1	ISTC-1200(a)
2-ISIV-1-286B/2	ISTC-1200(a)
2-ISIV-1-287B	ISTC-1200(a)
2-ISIV-1-294B/1	ISTC-1200(a)
2-ISIV-1-295B	ISTC-1200(a)
2-ISIV-3-295B	ISTC-1200(a)
2-ISIV-3-301B	ISTC-1200(a)

VALVE ID	EXEMPTION BASIS
2-ISIV-3-290B/1	ISTC-1200(a)
2-ISIV-3-291B/1	ISTC-1200(a)
2-ISIV-3-291B/2	ISTC-1200(a)
2-ISIV-1-294B/2	ISTC-1200(a)
2-ISIV-3-296B/2	ISTC-1200(a)
2-ISIV-3-297B/1	ISTC-1200(a)
2-ISIV-3-297B/2	ISTC-1200(a)

VALVE ID	EXEMPTION BASIS
2-ISIV-3-290B/2	ISTC-1200(a)
2-ISIV-3-290B/3	ISTC-1200(a)
2-ISIV-3-292B	ISTC-1200(a)
2-ISIV-3-296B/1	ISTC-1200(a)
2-ISIV-3-296B/3	ISTC-1200(a)
2-ISIV-3-298B	ISTC-1200(a)
2-VTIV-68-407B	ISTC - 1200(a)
2-ISIV-68-407C	ISTC-1200(a)

Appendix I - Valves Exempt from the IST Program

Flow Diagram: 2-47W600-309

VALVE ID	EXEMPTION BASIS	VALVE ID	EXEMPTION BASIS	VALVE ID	EXEMPTION BASIS
2-ISIV-1-280B/1	ISTC-1200(a)	2-ISIV-3-284B/1	ISTC-1200(a)	2-ISIV-3-286B	ISTC-1200(a)
2-ISIV-1-280B/2	ISTC-1200(a)	2-ISIV-3-285B/1	ISTC-1200(a)	2-ISIV-3-287B/2	ISTC-1200(a)
2-ISIV-1-281B	ISTC-1200(a)	2-ISIV-3-287B/1	ISTC-1200(a)	2-ISIV-3-287B/3	ISTC-1200(a)
2-ISIV-3-289B	ISTC-1200(a)	2-ISIV-3-288B/1	ISTC-1200(a)	2-ISIV-3-288B/2	ISTC-1200(a)
2-ISIV-1-306B/1	ISTC-1200(a)	2-ISIV-3-302B/1	ISTC-1200(a)	2-ISIV-3-304B	ISTC-1200(a)
2-ISIV-1-306B/2	ISTC-1200(a)	2-ISIV-3-303B/1	ISTC-1200(a)	2-ISIV-3-305B/1	ISTC-1200(a)
2-ISIV-1-307B	ISTC-1200(a)	2-ISIV-3-306B/1	ISTC-1200(a)	2-ISIV-3-305B/2	ISTC-1200(a)
2-ISIV-3-307B	ISTC-1200(a)	2-ISIV-68-428C/2	ISTC-1200(a)	2-ISIV-3-305B/3	ISTC-1200(a)
				2-ISIV-3-306B/2	ISTC-1200(a)

Flow Diagram: 2-47W600-31

VALVE ID	EXEMPTION BASIS	VALVE ID	EXEMPTION BASIS	VALVE ID	EXEMPTION BASIS
2-DRIV-1-276C/1	ISTC - 1200(a)	2-ISIV-1-276B/1	ISTC-1200(a)	2-ISIV-1-283B	ISTC-1200(a)
2-DRIV-1-276C/2	ISTC - 1200(a)	2-ISIV-1-276B/2	ISTC-1200(a)	2-ISIV-1-300B/1	ISTC-1200(a)
2-DRIV-1-282C	ISTC - 1200(a)	2-ISIV-1-282B	ISTC-1200(a)	2-ISIV-1-300B/2	ISTC-1200(a)
2-DRIV-1-300C/1	ISTC - 1200(a)	2-DRIV-1-496D	ISTC - 1200(a)	2-ISIV-1-302B	ISTC-1200(a)
2-DRIV-1-300C/2	ISTC - 1200(a)	2-EQIV-1-496E	ISTC - 1200(a)	2-ISIV-1-303B	ISTC-1200(a)
2-DRIV-1-302C	ISTC - 1200(a)	2-DRIV-1-497D	ISTC - 1200(a)	2-ISIV-1-496B	ISTC-1200(a)
				2-ISIV-1-497B	ISTC-1200(a)

Flow Diagram: 2-47W600-310

VALVE ID	EXEMPTION BASIS	VALVE ID	EXEMPTION BASIS	VALVE ID	EXEMPTION BASIS
2-VTIV-62-328B	ISTC-1200(a)	2-DRIV-70-316E	ISTC - 1200(a)	2-ISIV-3-283B	ISTC-1200(a)
2-ISIV-62-328C	ISTC-1200(a)	2-VTIV-62-329B	ISTC-1200(a)	2-VTIV-70-316B	ISTC-1200(a)
2-DRIV-62-328E	ISTC - 1200(a)	2-ISIV-63-384C/1	ISTC-1200(a)	2-ISIV-70-316C	ISTC-1200(a)
2-ISIV-62-329C	ISTC-1200(a)	2-ISIV-63-384C/2	ISTC-1200(a)	2-EQIV-70-316F	ISTC - 1200(a)
2-DRIV-62-329E	ISTC - 1200(a)	2-DRIV-63-384D/1	ISTC - 1200(a)	2-VTIV-70-317B	ISTC-1200(a)
2-EQIV-62-329F	ISTC - 1200(a)	2-DRIV-63-384D/2	ISTC - 1200(a)	2-ISIV-70-317C	ISTC-1200(a)
				2-DRIV-70-317E	ISTC - 1200(a)

Appendix I - Valves Exempt from the IST Program

Flow Diagram: 2-47W600-311

VALVE ID	EXEMPTION BASIS	VALVE ID	EXEMPTION BASIS	VALVE ID	EXEMPTION BASIS
2-VTIV-70-320B	ISTC-1200(a)	2-ISIV-70-320C	ISTC-1200(a)	2-ISIV-62-438C	ISTC-1200(a)
2-VTIV-70-321B	ISTC-1200(a)	2-ISIV-70-321C	ISTC-1200(a)	2-ISIV-62-439C	ISTC-1200(a)
2-VTIV-62-432B	ISTC-1200(a)	2-ISIV-62-435B/1	ISTC-1200(a)	2-ISIV-62-441B/1	ISTC-1200(a)
2-VTIV-62-433B	ISTC-1200(a)	2-ISIV-62-435B/2	ISTC-1200(a)	2-ISIV-62-441B/2	ISTC-1200(a)
2-VTIV-62-438B	ISTC-1200(a)	2-ISIV-62-436B/1	ISTC-1200(a)	2-ISIV-62-442B/1	ISTC-1200(a)
2-VTIV-62-439B	ISTC-1200(a)	2-ISIV-62-436B/2	ISTC-1200(a)	2-ISIV-62-442B/2	ISTC-1200(a)

Flow Diagram: 2-47W600-312

VALVE ID	EXEMPTION BASIS	VALVE ID	EXEMPTION BASIS	VALVE ID	EXEMPTION BASIS
2-VTIV-3-281B	ISTC - 1200(a)	2-ISIV-3-281C	ISTC-1200(a)	2-ISIV-70-296C	ISTC-1200(a)
2-VTIV-3-282B	ISTC - 1200(a)	2-ISIV-3-282C	ISTC-1200(a)	2-ISIV-70-297C	ISTC-1200(a)
2-VTIV-70-294B	ISTC-1200(a)	2-ISIV-70-294C	ISTC-1200(a)	2-ISIV-62-320C	ISTC-1200(a)
2-VTIV-70-295B	ISTC-1200(a)	2-ISIV-70-295C	ISTC-1200(a)	2-ISIV-62-321C	ISTC-1200(a)
2-VTIV-70-328B	ISTC-1200(a)	2-VTIV-70-296B	ISTC-1200(a)	2-ISIV-70-328C	ISTC-1200(a)
2-VTIV-70-329B	ISTC-1200(a)	2-VTIV-70-297B	ISTC-1200(a)	2-ISIV-70-329C	ISTC-1200(a)
2-VTIV-70-330B	ISTC-1200(a)	2-VTIV-62-320B	ISTC-1200(a)	2-ISIV-70-330C	ISTC-1200(a)
2-VTIV-70-331B	ISTC-1200(a)	2-VTIV-62-321B	ISTC-1200(a)	2-ISIV-70-331C	ISTC-1200(a)

Flow Diagram: 2-47W600-314

VALVE ID	EXEMPTION BASIS	VALVE ID	EXEMPTION BASIS	VALVE ID	EXEMPTION BASIS
2-ISIV-68-367A	ISTC-1200(a)	2-ISIV-68-367B	ISTC-1200(a)	2-ISIV-68-369B	ISTC-1200(a)
2-ISIV-68-368A	ISTC-1200(a)	2-ISIV-68-368B	ISTC-1200(a)	2-ISIV-68-370B	ISTC-1200(a)
2-ISIV-68-369A	ISTC-1200(a)	2-ISIV-68-371A	ISTC-1200(a)	2-ISIV-68-371B	ISTC-1200(a)
2-ISIV-68-370A	ISTC-1200(a)	2-ISIV-68-372A	ISTC-1200(a)	2-ISIV-68-372B	ISTC-1200(a)

Appendix I - Valves Exempt from the IST Program

Flow Diagram: 2-47W600-316

VALVE ID	EXEMPTION BASIS	VALVE ID	EXEMPTION BASIS	VALVE ID	EXEMPTION BASIS
2-ISIV-3-293B/1	ISTC-1200(a)	2-ISIV-1-278B	ISTC-1200(a)	2-ISIV-1-288B	ISTC-1200(a)
2-ISIV-3-293B/2	ISTC-1200(a)	2-ISIV-1-279B	ISTC-1200(a)	2-ISIV-1-289B	ISTC-1200(a)
2-ISIV-3-294B/1	ISTC-1200(a)	2-ISIV-3-280B	ISTC-1200(a)	2-ISIV-1-296B	ISTC-1200(a)
2-ISIV-3-294B/2	ISTC-1200(a)	2-ISIV-3-284B/2	ISTC-1200(a)	2-ISIV-1-297B	ISTC-1200(a)
2-ISIV-3-299B/1	ISTC-1200(a)	2-ISIV-3-285B/2	ISTC-1200(a)	2-ISIV-3-302B/2	ISTC-1200(a)
2-ISIV-3-299B/2	ISTC-1200(a)	2-ISIV-1-304B	ISTC-1200(a)	2-ISIV-3-303B/2	ISTC-1200(a)
2-ISIV-3-300B/1	ISTC-1200(a)	2-ISIV-1-305B	ISTC-1200(a)	2-VTIV-62-304B	ISTC-1200(a)
2-ISIV-3-300B/2	ISTC-1200(a)	2-VTIV-62-312B	ISTC-1200(a)	2-ISIV-62-304C	ISTC-1200(a)
2-ISIV-62-312C	ISTC-1200(a)	2-VTIV-62-313B	ISTC-1200(a)	2-VTIV-62-305B	ISTC-1200(a)
2-ISIV-62-332B	ISTA-1100	2-ISIV-62-313C	ISTC-1200(a)	2-ISIV-62-305C	ISTC-1200(a)

Flow Diagram: 2-47W600-31A

VALVE ID	EXEMPTION BASIS	VALVE ID	EXEMPTION BASIS	VALVE ID	EXEMPTION BASIS
2-DRIV-1-277C	ISTC - 1200(a)	2-DRIV-1-301C	ISTC - 1200(a)	2-ISIV-1-277B	ISTC-1200(a)
				2-ISIV-1-301B	ISTC-1200(a)

Flow Diagram: 2-47W600-32

VALVE ID	EXEMPTION BASIS	VALVE ID	EXEMPTION BASIS	VALVE ID	EXEMPTION BASIS
2-ISIV-63-381C	ISTC-1200(a)	2-ISIV-70-306C	ISTC-1200(a)	2-VTIV-70-306B	ISTC-1200(a)
2-DRIV-63-381D	ISTC - 1200(a)	2-DRIV-70-306E	ISTC - 1200(a)	2-VTIV-70-307B	ISTC-1200(a)
2-VTIV-63-382B	ISTC-1200(a)	2-EQIV-70-306F	ISTC - 1200(a)	2-VTIV-70-308B	ISTC-1200(a)
2-ISIV-63-382C/1	ISTC-1200(a)	2-ISIV-70-307C	ISTC-1200(a)	2-ISIV-70-308C	ISTC-1200(a)
2-ISIV-63-382C/2	ISTC-1200(a)	2-DRIV-70-307E	ISTC - 1200(a)	2-VTIV-70-309B	ISTC-1200(a)
2-DRIV-63-382D/1	ISTC - 1200(a)	2-DRIV-70-308E	ISTC - 1200(a)	2-ISIV-70-309C	ISTC-1200(a)
2-DRIV-63-382D/2	ISTC - 1200(a)	2-EQIV-70-308F	ISTC - 1200(a)	2-VTIV-70-318B	ISTC-1200(a)
2-ISIV-63-383C	ISTC-1200(a)	2-DRIV-70-318E	ISTC - 1200(a)	2-ISIV-70-318C	ISTC-1200(a)
2-DRIV-63-383D	ISTC - 1200(a)	2-EQIV-70-318F	ISTC - 1200(a)	2-VTIV-70-319B	ISTC-1200(a)
2-VTIV-63-384B	ISTC - 1200(a)	2-DRIV-70-319E	ISTC - 1200(a)	2-ISIV-70-319C	ISTC-1200(a)
		2-VTIV-63-383B	ISTC-1200(a)	2-VTIV-63-381B	ISTC-1200(a)

Flow Diagram: 2-47W600-325

VALVE ID	EXEMPTION BASIS	VALVE ID	EXEMPTION BASIS	VALVE ID	EXEMPTION BASIS
2-ISIV-70-373B	ISTA-1100	2-ISIV-70-374B	ISTA-1100	2-ISIV-70-332B	ISTA-1100
				2-ISIV-70-333B	ISTA-1100

Appendix I - Valves Exempt from the IST Program

Flow Diagram: 2-47W600-331

VALVE ID	EXEMPTION BASIS	VALVE ID	EXEMPTION BASIS	VALVE ID	EXEMPTION BASIS
2-ISIV-68-446B	ISTC-1200(a)	2-ISIV-68-445B/1	ISTC-1200(a)	2-ISIV-68-445B/3	ISTC-1200(a)
2-ISIV-68-446C	ISTC-1200(a)	2-ISIV-68-445B/2	ISTC-1200(a)	2-ISIV-68-446B/2	ISTC-1200(a)
2-ISIV-68-446D	ISTC-1200(a)	2-ISIV-68-446B/1	ISTC-1200(a)	2-ISIV-68-446B/3	ISTC-1200(a)
2-ISIV-68-446E	ISTC-1200(a)	2-EQIV-68-446E/3	ISTC-1200(a)	2-ISIV-68-446B/4	ISTC-1200(a)
				2-ISIV-68-446B/5	ISTC-1200(a)

Flow Diagram: 2-47W600-332

VALVE ID	EXEMPTION BASIS	VALVE ID	EXEMPTION BASIS	VALVE ID	EXEMPTION BASIS
2-ISIV-68-442B	ISTC-1200(a)	2-ISIV-68-443B	ISTC-1200(a)	2-EQIV-68-442D/1	ISTC-1200(a)
2-ISIV-68-442B/1	ISTC-1200(a)	2-ISIV-68-443B/1	ISTC-1200(a)	2-ISIV-68-443B/2	ISTC-1200(a)
2-ISIV-68-442B/2	ISTC-1200(a)	2-ISIV-68-443C	ISTC-1200(a)	2-ISIV-68-443B/3	ISTC-1200(a)
2-ISIV-68-442C	ISTC-1200(a)	2-ISIV-68-444B/1	ISTC-1200(a)	2-ISIV-68-443D	ISTC-1200(a)
2-ISIV-68-569B	ISTC-1200(a)	2-ISIV-68-444B/2	ISTC-1200(a)	2-ISIV-68-443E	ISTC-1200(a)
				2-EQIV-68-443E/2	ISTC-1200(a)

Flow Diagram: 2-47W600-340

VALVE ID	EXEMPTION BASIS	VALVE ID	EXEMPTION BASIS	VALVE ID	EXEMPTION BASIS
2-ISIV-3-326B/1	ISTC - 1200(a)	2-ISIV-3-326B/2	ISTC - 1200(a)	2-ISIV-3-329B/1	ISTC - 1200(a)
2-ISIV-3-327B/1	ISTC - 1200(a)	2-ISIV-3-327B/2	ISTC - 1200(a)	2-ISIV-3-329B/2	ISTC - 1200(a)
		2-ISIV-3-330B/1	ISTC - 1200(a)	2-ISIV-3-330B/2	ISTC - 1200(a)

Flow Diagram: 2-47W600-341

VALVE ID	EXEMPTION BASIS	VALVE ID	EXEMPTION BASIS	VALVE ID	EXEMPTION BASIS
2-ISIV-63-355B	ISTC-1200(a)	2-ISIV-63-357B	ISTC-1200(a)	2-ISIV-63-360B	ISTC-1200(a)
2-ISIV-63-356B	ISTC-1200(a)	2-ISIV-63-358B	ISTC-1200(a)	2-ISIV-63-361B	ISTC-1200(a)
		2-ISIV-63-359B	ISTC-1200(a)	2-ISIV-63-362B	ISTC-1200(a)

Appendix I - Valves Exempt from the IST Program

Flow Diagram: 2-47W600-342

VALVE ID	EXEMPTION BASIS	VALVE ID	EXEMPTION BASIS	VALVE ID	EXEMPTION BASIS
2-DRIV-63-351C	ISTC - 1200(a)	2-EQIV-63-352E	ISTC - 1200(a)	2-ISIV-63-351B	ISTC-1200(a)
2-DRIV-63-352C	ISTC - 1200(a)	2-ISIV-63-353D/L	ISTC - 1200(a)	2-ISIV-63-352B	ISTC-1200(a)
2-DRIV-63-353C	ISTC - 1200(a)	2-EQIV-63-354E	ISTC - 1200(a)	2-ISIV-63-353B	ISTC-1200(a)
2-DRIV-63-354C	ISTC - 1200(a)	2-ISIV-63-363B	ISTC-1200(a)	2-ISIV-63-354B	ISTC-1200(a)
2-DRIV-63-363C	ISTC - 1200(a)	2-EQIV-63-364E	ISTC - 1200(a)	2-ISIV-63-364B	ISTC-1200(a)
2-DRIV-63-364C	ISTC - 1200(a)	2-DRIV-63-366C	ISTC - 1200(a)	2-ISIV-63-365B	ISTC-1200(a)
2-DRIV-63-365C	ISTC - 1200(a)	2-EQIV-63-366E	ISTC - 1200(a)	2-ISIV-63-366B	ISTC-1200(a)

Flow Diagram: 2-47W600-40

VALVE ID	EXEMPTION BASIS	VALVE ID	EXEMPTION BASIS	VALVE ID	EXEMPTION BASIS
2-ISIV-3-343B	ISTC - 1200(a)	2-ISIV-3-344B	ISTC - 1200(a)	2-ISIV-3-268B	ISTC - 1200(a)
				2-ISIV-3-269B	ISTC - 1200(a)

Flow Diagram: 2-47W600-62

VALVE ID	EXEMPTION BASIS	VALVE ID	EXEMPTION BASIS	VALVE ID	EXEMPTION BASIS
2-VTIV-3-314B	ISTC - 1200(a)	2-ISIV-3-314C/1	ISTC - 1200(a)	2-ISIV-3-316C/1	ISTC - 1200(a)
2-VTIV-3-315B	ISTC - 1200(a)	2-ISIV-3-314C/2	ISTC - 1200(a)	2-ISIV-3-316C/2	ISTC - 1200(a)
2-VTIV-3-316B/1	ISTC - 1200(a)	2-ISIV-3-314C/3	ISTC - 1200(a)	2-ISIV-3-316C/3	ISTC - 1200(a)
2-VTIV-3-316B/2	ISTC - 1200(a)	2-ISIV-3-315C/1	ISTC - 1200(a)	2-ISIV-3-317C/1	ISTC - 1200(a)
2-VTIV-3-317B/1	ISTC - 1200(a)	2-ISIV-3-315C/2	ISTC - 1200(a)	2-ISIV-3-317C/2	ISTC - 1200(a)
2-VTIV-3-317B/2	ISTC - 1200(a)	2-ISIV-3-315C/3	ISTC - 1200(a)	2-ISIV-3-317C/3	ISTC - 1200(a)

Flow Diagram: 2-47W600-64

VALVE ID	EXEMPTION BASIS	VALVE ID	EXEMPTION BASIS	VALVE ID	EXEMPTION BASIS
2-DRIV-68-428D/1	ISTC - 1200(a)	2-ISIV-3-328B/2	ISTC - 1200(a)	2-ISIV-3-325B/1	ISTC - 1200(a)
2-DRIV-68-429D/1	ISTC - 1200(a)	2-ISIV-68-428C/1	ISTC-1200(a)	2-ISIV-3-325B/2	ISTC - 1200(a)
		2-ISIV-68-429C/1	ISTC-1200(a)	2-ISIV-3-328B/1	ISTC - 1200(a)

Flow Diagram: 2-47W600-65

VALVE ID	EXEMPTION BASIS	VALVE ID	EXEMPTION BASIS	VALVE ID	EXEMPTION BASIS
2-ISIV-1-274B	ISTC-1200(a)	2-ISIV-1-275B	ISTC-1200(a)	2-ISIV-3-322C/1	ISTC - 1200(a)
2-DRIV-1-274D	ISTC - 1200(a)	2-VTIV-3-322B	ISTC - 1200(a)	2-ISIV-3-322C/2	ISTC - 1200(a)
2-EQIV-1-274E	ISTC - 1200(a)	2-ISIV-3-323B	ISTC - 1200(a)	2-ISIV-3-335B	ISTC - 1200(a)
2-DRIV-1-275D	ISTC - 1200(a)	2-ISIV-3-324B	ISTC - 1200(a)	2-ISIV-3-336B	ISTC - 1200(a)
		2-VTIV-3-371B	ISTC - 1200(a)	2-ISIV-3-371C	ISTC - 1200(a)

Appendix I - Valves Exempt from the IST Program

Flow Diagram: 2-47W600-75

VALVE ID	EXEMPTION BASIS	VALVE ID	EXEMPTION BASIS	VALVE ID	EXEMPTION BASIS
2-DRIV-68-429D/2	ISTC - 1200(a)	2-ISIV-68-428F	ISTC-1200(a)	2-VTIV-68-428B	ISTC - 1200(a)
2-DRIV-68-429D/3	ISTC - 1200(a)	2-ISIV-68-429C/2	ISTC - 1200(c)	2-VTIV-68-429B	ISTC - 1200(a)
				2-ISIV-68-429C/3	ISTC - 1200(c)

Flow Diagram: 2-47W600-81

VALVE ID	EXEMPTION BASIS	VALVE ID	EXEMPTION BASIS	VALVE ID	EXEMPTION BASIS
2-ISIV-65-80B	ISTC - 1200(a)	2-ISIV-65-82B	ISTC - 1200(a)	2-ISIV-65-80A	ISTC - 1200(a)
2-ISIV-65-80BB	ISTC - 1200(a)	2-ISIV-65-82BB	ISTC - 1200(a)	2-ISIV-65-82A	ISTC - 1200(a)

Flow Diagram: 2-47W600-82

VALVE ID	EXEMPTION BASIS	VALVE ID	EXEMPTION BASIS	VALVE ID	EXEMPTION BASIS
2-DRIV-62-352D	ISTC - 1200(a)	2-ISIV-62-352C	ISTC-1200(a)	2-VTIV-62-352B	ISTC - 1200(a)
2-DRIV-62-353D/1	ISTC - 1200(a)	2-ISIV-62-353C/1	ISTC-1200(a)	2-VTIV-62-353B	ISTC - 1200(a)

Flow Diagram: 2-47W600-89

VALVE ID	EXEMPTION BASIS	VALVE ID	EXEMPTION BASIS	VALVE ID	EXEMPTION BASIS
2-ISIV-30-30C/A	ISTC - 1200(a)	2-ISIV-30-133A	ISTC - 1200(a)	2-ISIV-30-44A	ISTC - 1200(a)
2-ISIV-30-126A	ISTC - 1200(a)	2-ISIV-30-310A	ISTC - 1200(a)	2-ISIV-30-311A	ISTC - 1200(a)
2-ISIV-30-127A	ISTC - 1200(a)	2-ISIV-30-42A	ISTC - 1200(a)	2-ISIV-30-43A	ISTC - 1200(a)
				2-ISIV-30-45A	ISTC - 1200(a)

Flow Diagram: 2-47W600-92

VALVE ID	EXEMPTION BASIS	VALVE ID	EXEMPTION BASIS	VALVE ID	EXEMPTION BASIS
1-DRIV-1-276C/2	ISTC - 1200(a)	1-DRIV-1-300C/2	ISTC - 1200(a)	2-DRIV-1-292C/2	ISTC - 1200(c)

Appendix I - Valves Exempt from the IST Program

Flow Diagram: 2-47W600-93

VALVE ID	EXEMPTION BASIS	VALVE ID	EXEMPTION BASIS	VALVE ID	EXEMPTION BASIS
2-ISIV-70-265C	ISTC-1200(a)	2-DRIV-74-100D	ISTC - 1200(a)	2-VTIV-74-100B	ISTC-1200(a)
2-DRIV-70-265E	ISTC - 1200(a)	2-DRIV-74-101D	ISTC - 1200(a)	2-ISIV-74-100C	ISTC-1200(a)
2-EQIV-70-265F	ISTC - 1200(a)	2-DRIV-74-104C	ISTC - 1200(a)	2-VTIV-74-101B	ISTC-1200(a)
2-ISIV-70-266C	ISTC-1200(a)	2-DRIV-74-107D	ISTC - 1200(a)	2-ISIV-74-101C	ISTC-1200(a)
2-DRIV-70-266E	ISTC - 1200(a)	2-DRIV-74-108D	ISTC - 1200(a)	2-ISIV-74-104B	ISTC-1200(a)
2-ISIV-70-278B	ISTC-1200(a)	2-DRIV-74-111C	ISTC - 1200(a)	2-VTIV-74-107B	ISTC-1200(a)
2-DRIV-70-278D	ISTC - 1200(a)	2-ISIV-72-212C/2	ISTC-1200(a)	2-ISIV-74-107C	ISTC-1200(a)
2-ISIV-70-279B	ISTC-1200(a)	2-DRIV-72-212D/2	ISTC - 1200(a)	2-VTIV-74-108B	ISTC-1200(a)
2-DRIV-70-279D	ISTC - 1200(a)	2-VTIV-70-265B	ISTC-1200(a)	2-ISIV-74-108C	ISTC-1200(a)
2-EQIV-70-279E	ISTC - 1200(a)	2-VTIV-70-266B	ISTC-1200(a)	2-ISIV-74-111B	ISTC-1200(a)

Flow Diagram: 2-47W600-93A

VALVE ID	EXEMPTION BASIS	VALVE ID	EXEMPTION BASIS	VALVE ID	EXEMPTION BASIS
2-ISIV-74-102B/1	ISTC-1200(a)	2-ISIV-74-103B/2	ISTC-1200(a)	2-ISIV-74-109B/1	ISTC-1200(a)
2-ISIV-74-102B/2	ISTC-1200(a)	2-ISIV-74-103B/3	ISTC-1200(a)	2-ISIV-74-109B/2	ISTC-1200(a)
2-ISIV-74-102B/3	ISTC-1200(a)	2-ISIV-74-110B/1	ISTC-1200(a)	2-ISIV-74-109B/3	ISTC-1200(a)
2-ISIV-74-103B/1	ISTC-1200(a)	2-ISIV-74-110B/2	ISTC-1200(a)	2-ISIV-74-110B/3	ISTC-1200(a)

Flow Diagram: 2-47W625-1

VALVE ID	EXEMPTION BASIS	VALVE ID	EXEMPTION BASIS	VALVE ID	EXEMPTION BASIS
2-SMV-43-669	ISTC - 1200(c)	2-TV-43-674	ISTC - 1200(a)	2-FCV-43-1	ISTA-1100
2-TV-43-670	ISTC - 1200(a)	2-TV-43-679	ISTC - 1200(a)	2-FCV-43-10	ISTA-1100
2-SMV-43-673	ISTC - 1200(c)	2-CKV-43-1630	ISTA-1100	2-FCV-43-20	ISTA-1100
2-SMV-43-678	ISTC - 1200(c)	2-CKV-43-1632	ISTA-1100	2-FCV-43-21	ISTA-1100

Flow Diagram: 2-47W625-11

VALVE ID	EXEMPTION BASIS	VALVE ID	EXEMPTION BASIS	VALVE ID	EXEMPTION BASIS
2-ISV-43-1470	ISTC-1200(c)	2-TV-43-1471	ISTC-1200(a)	2-TV-43-1472	ISTC-1200(a)
2-ISV-43-1475	ISTC-1200(c)	2-ISV-43-1492	ISTC-1200(c)	2-TV-43-1473	ISTC-1200(a)
		2-ISV-43-1493	ISTC-1200(c)	2-TV-43-1474	ISTC-1200(a)

Flow Diagram: 2-47W625-15

VALVE ID	EXEMPTION BASIS	VALVE ID	EXEMPTION BASIS	VALVE ID	EXEMPTION BASIS
2-TV-43-883B	ISTC-1200(a)	2-TV-43-884B	ISTC-1200(a)	2-TV-43-883A	ISTC-1200(a)
				2-TV-43-884A	ISTC-1200(a)

Appendix I - Valves Exempt from the IST Program

Flow Diagram: 2-47W625-2

VALVE ID	EXEMPTION BASIS
2-SMV-43-691	ISTC - 1200(c)
2-TV-43-692	ISTC - 1200(a)
2-SMV-43-695	ISTC - 1200(c)
2-TV-43-696	ISTC - 1200(c)
2-SMV-43-699	ISTC - 1200(c)
2-TV-43-700	ISTC - 1200(a)
2-SMV-43-703	ISTC - 1200(c)
2-SMV-43-707	ISTC - 1200(c)

VALVE ID	EXEMPTION BASIS
2-FCV-43-31	ISTA-1100
2-FCV-43-54B	ISTA-1100
2-FCV-43-63A	ISTA-1100
2-TV-43-704	ISTC - 1200(c)
2-TV-43-708	ISTC - 1200(a)
2-FCV-43-56D	ISTA-1100
2-FCV-43-54D	ISTA-1100
2-FCV-43-63D	ISTA-1100
2-FCV-43-59D	ISTA-1100

VALVE ID	EXEMPTION BASIS
2-FCV-43-30	ISTA-1100
2-FCV-43-32	ISTA-1100
2-FCV-43-33	ISTA-1100
2-FCV-43-54A	ISTA-1100
2-FCV-43-56A	ISTA-1100
2-FCV-43-56B	ISTA-1100
2-FCV-43-59A	ISTA-1100
2-FCV-43-59B	ISTA-1100
2-FCV-43-63B	ISTA-1100

Flow Diagram: 2-47W625-22

VALVE ID	EXEMPTION BASIS
2-SMV-43-1199	ISTC-1200(a)

VALVE ID	EXEMPTION BASIS
2-SMV-43-1198	ISTC-1200(a)

Flow Diagram: 2-47W625-23

VALVE ID	EXEMPTION BASIS
2-SMV-43-1288	ISTC-1200(a)

Flow Diagram: 2-47W625-3

VALVE ID	EXEMPTION BASIS
2-FCV-43-69	ISTA-1100

VALVE ID	EXEMPTION BASIS
2-FCV-43-67	ISTA-1100

Flow Diagram: 2-47W625-7

VALVE ID	EXEMPTION BASIS
2-SMV-43-745	ISTC-1200(a)

VALVE ID	EXEMPTION BASIS
2-SMV-43-746	ISTC-1200(a)

Appendix I - Valves Exempt from the IST Program

Flow Diagram: 2-47W801-1

VALVE ID	EXEMPTION BASIS
2-RTV-1-276A	ISTC - 1200(a)
2-RTV-1-277A	ISTC - 1200(a)
2-RTV-1-278A	ISTC - 1200(a)
2-RTV-1-279A	ISTC - 1200(a)
2-RTV-1-280A	ISTC - 1200(a)
2-RTV-1-281A	ISTC - 1200(a)
2-RTV-1-282A	ISTC - 1200(a)
2-RTV-1-283A	ISTC - 1200(a)
2-RTV-1-284A	ISTC - 1200(a)
2-RTV-1-285A	ISTC - 1200(a)
2-RTV-1-286A	ISTC - 1200(a)
2-RTV-1-287A	ISTC - 1200(a)
2-RTV-1-288A	ISTC - 1200(a)
2-DRV-1-533	ISTC-1200(a)
2-DRV-1-535	ISTC-1200(a)
2-DRV-1-537	ISTC-1200(a)
2-DRV-1-539	ISTC-1200(a)
2-ISV-1-540	ISTC-1200(a)
2-ISV-1-541	ISTC-1200(a)
2-ISV-1-542	ISTC-1200(a)
2-ISV-1-543	ISTC-1200(a)

VALVE ID	EXEMPTION BASIS
2-THV-1-8	ISTC - 1200(c)
2-THV-1-18	ISTC - 1200(c)
2-RTV-1-289A	ISTC - 1200(a)
2-RTV-1-290A	ISTC - 1200(a)
2-RTV-1-291A	ISTC - 1200(a)
2-RTV-1-292A	ISTC - 1200(a)
2-RTV-1-293A	ISTC - 1200(a)
2-RTV-1-294A	ISTC-1200(a)
2-RTV-1-295A	ISTC-1200(a)
2-RTV-1-296A	ISTC - 1200(a)
2-RTV-1-297A	ISTC - 1200(a)
2-RTV-1-298A	ISTC - 1200(a)
2-RTV-1-299A	ISTC - 1200(a)
2-RTV-1-300A	ISTC - 1200(a)
2-RTV-1-301A	ISTC-1200(a)
2-RTV-1-302A	ISTC-1200(a)
2-RTV-1-303A	ISTC - 1200(a)
2-RTV-1-304A	ISTC-1200(a)
2-RTV-1-305A	ISTC - 1200(a)
2-RTV-1-306A	ISTC - 1200(a)
2-RTV-1-307A	ISTC - 1200(a)

VALVE ID	EXEMPTION BASIS
2-THV-1-28	ISTC - 1200(c)
2-THV-1-48	ISTC - 1200(c)
2-TV-1-500	ISTC - 1200(a)
2-TV-1-501	ISTC - 1200(a)
2-TV-1-502	ISTC - 1200(a)
2-TV-1-503	ISTC - 1200(a)
2-VTV-1-504	ISTC - 1200(a)
2-VTV-1-505	ISTC - 1200(a)
2-VTV-1-506	ISTC - 1200(a)
2-VTV-1-507	ISTC - 1200(a)
2-VTV-1-508	ISTC - 1200(a)
2-VTV-1-509	ISTC - 1200(a)
2-VTV-1-510	ISTC - 1200(a)
2-VTV-1-511	ISTC - 1200(a)
2-DRV-1-532	ISTA-1100
2-DRV-1-534	ISTA-1100
2-DRV-1-536	ISTA-1100
2-DRV-1-538	ISTA-1100
2-TV-1-623	ISTC - 1200(a)
2-TV-1-624	ISTC - 1200(a)
2-TV-1-625	ISTC - 1200(a)
2-TV-1-626	ISTC - 1200(a)

Appendix I - Valves Exempt from the IST Program

Flow Diagram: 2-47W801-2

VALVE ID	EXEMPTION BASIS	VALVE ID	EXEMPTION BASIS	VALVE ID	EXEMPTION BASIS
2-DRV-1-804	ISTC - 1200(a)	2-RTV-1-268A	ISTC - 1200(a)	2-TV-1-824	ISTC - 1200(a)
2-DRV-1-805	ISTC-1200(a)	2-RTV-1-269A	ISTC - 1200(a)	2-TV-1-825	ISTC - 1200(a)
2-DRV-1-806	ISTC - 1200(a)	2-RTV-1-270A	ISTC - 1200(a)	2-TV-1-826	ISTC - 1200(a)
2-DRV-1-807	ISTC-1200(a)	2-RTV-1-271A	ISTC - 1200(a)	2-TV-1-827	ISTC - 1200(a)
2-DRV-1-808	ISTC - 1200(a)	2-RTV-1-272A	ISTC - 1200(a)	2-TV-1-866	ISTC - 1200(a)
2-DRV-1-809	ISTC-1200(a)	2-RTV-1-273A	ISTC - 1200(a)	2-TV-1-867	ISTC - 1200(a)
2-DRV-1-810	ISTC - 1200(a)	2-RTV-1-274A	ISTC - 1200(a)	2-TV-1-868	ISTC - 1200(a)
2-DRV-1-811	ISTC-1200(a)	2-RTV-1-275A	ISTC - 1200(a)	2-TV-1-869	ISTC - 1200(a)
2-ISV-1-812	ISTC - 1200(c)	2-ISV-1-816	ISTC - 1200(c)	2-VTV-1-893	ISTC - 1200(a)
2-ISV-1-813	ISTC - 1200(c)	2-ISV-1-817	ISTC - 1200(c)	2-VTV-1-894	ISTC - 1200(a)
2-ISV-1-814	ISTC - 1200(c)	2-ISV-1-818	ISTC - 1200(c)	2-VTV-1-895	ISTC - 1200(a)
2-ISV-1-815	ISTC - 1200(c)	2-ISV-1-819	ISTC - 1200(c)	2-VTV-1-896	ISTC - 1200(a)
2-DRV-1-858	ISTC - 1200(a)	2-SMV-1-820	ISTC - 1200(a)	2-VTV-1-897	ISTC - 1200(a)
2-DRV-1-859	ISTC-1200(a)	2-SMV-1-821	ISTC - 1200(a)	2-VTV-1-898	ISTC - 1200(a)
2-DRV-1-860	ISTC - 1200(a)	2-SMV-1-822	ISTC - 1200(a)	2-VTV-1-899	ISTC - 1200(a)
2-DRV-1-861	ISTC-1200(a)	2-SMV-1-823	ISTC - 1200(a)	2-VTV-1-900	ISTC - 1200(a)
2-DRV-1-862	ISTC - 1200(a)	2-SMV-1-836	ISTC - 1200(a)	2-VTV-1-901	ISTC - 1200(a)
2-DRV-1-863	ISTC-1200(a)	2-SMV-1-837	ISTC - 1200(a)	2-VTV-1-902	ISTC - 1200(a)
2-DRV-1-864	ISTC - 1200(a)	2-SMV-1-838	ISTC - 1200(a)	2-VTV-1-903	ISTC - 1200(a)
2-DRV-1-865	ISTC-1200(a)	2-SMV-1-839	ISTC - 1200(a)	2-VTV-1-904	ISTC - 1200(a)

Appendix I - Valves Exempt from the IST Program

Flow Diagram: 2-47W803-1

VALVE ID	EXEMPTION BASIS
2-DRV-3-500	ISTA-1100
2-DRV-3-502	ISTA-1100
2-DRV-3-504	ISTA-1100
2-DRV-3-506	ISTA-1100
2-DRV-3-512	ISTA-1100
2-DRV-3-514	ISTA-1100
2-DRV-3-516	ISTA-1100
2-DRV-3-518	ISTA-1100
2-DRV-3-522	ISTA-1100
2-DRV-3-526	ISTA-1100
2-DRV-3-592	ISTA-1100
2-DRV-3-594	ISTA-1100
2-DRV-3-596	ISTA-1100
2-VTV-3-630	ISTC-1200(a)
2-VTV-3-631	ISTC-1200(a)
2-VTV-3-632	ISTC-1200(a)
2-VTV-3-633	ISTC-1200(a)
2-DRV-3-636	ISTA-1100
2-DRV-3-639	ISTA-1100
2-DRV-3-641	ISTA-1100
2-DRV-3-646	ISTA-1100
2-DRV-3-650	ISTA-1100
2-DRV-3-653	ISTA-1100
2-DRV-3-657	ISTA-1100
2-DRV-3-659	ISTA-1100
2-DRV-3-664	ISTA-1100
2-DRV-3-666	ISTA-1100
2-DRV-3-673	ISTA-1100

VALVE ID	EXEMPTION BASIS
2-DRV-3-501	ISTC-1200(a)
2-DRV-3-503	ISTC-1200(a)
2-DRV-3-505	ISTC-1200(a)
2-DRV-3-507	ISTC-1200(a)
2-DRV-3-515	ISTC-1200(a)
2-DRV-3-517	ISTC-1200(a)
2-DRV-3-519	ISTC-1200(a)
2-DRV-3-520	ISTA-1100
2-DRV-3-521	ISTC-1200(a)
2-DRV-3-523	ISTC-1200(a)
2-DRV-3-524	ISTC-1200(a)
2-DRV-3-525	ISTA-1100
2-DRV-3-527	ISTC-1200(a)
2-DRV-3-589	ISTC-1200(a)
2-DRV-3-590	ISTA-1100
2-DRV-3-591	ISTC-1200(a)
2-DRV-3-593	ISTC-1200(a)
2-DRV-3-595	ISTC-1200(a)
2-DRV-3-637	ISTC-1200(a)
2-DRV-3-640	ISTC-1200(a)
2-DRV-3-642	ISTC-1200(a)
2-DRV-3-651	ISTC-1200(a)
2-DRV-3-654	ISTC-1200(a)
2-DRV-3-658	ISTC-1200(a)
2-DRV-3-660	ISTC-1200(a)
2-DRV-3-665	ISTC-1200(a)
2-DRV-3-667	ISTC-1200(a)
2-DRV-3-674	ISTC-1200(a)
2-DRV-3-676	ISTC-1200(a)

VALVE ID	EXEMPTION BASIS
2-RTV-3-280A	ISTC-1200(a)
2-RTV-3-281A	ISTC-1200(a)
2-RTV-3-282A	ISTC-1200(a)
2-RTV-3-283A	ISTC-1200(a)
2-RTV-3-284A	ISTC-1200(a)
2-RTV-3-285A	ISTC-1200(a)
2-RTV-3-286A	ISTC-1200(a)
2-RTV-3-287A	ISTC-1200(a)
2-RTV-3-288A	ISTC-1200(a)
2-RTV-3-289A	ISTC-1200(a)
2-RTV-3-290A	ISTC-1200(a)
2-RTV-3-291A	ISTC-1200(a)
2-RTV-3-292A	ISTC-1200(a)
2-RTV-3-293A	ISTC-1200(a)
2-RTV-3-294A	ISTC-1200(a)
2-RTV-3-295A	ISTC-1200(a)
2-RTV-3-296A	ISTC-1200(a)
2-RTV-3-297A	ISTC-1200(a)
2-RTV-3-298A	ISTC-1200(a)
2-RTV-3-299A	ISTC-1200(a)
2-RTV-3-300A	ISTC-1200(a)
2-RTV-3-301A	ISTC-1200(a)
2-RTV-3-302A	ISTC-1200(a)
2-RTV-3-303A	ISTC-1200(a)
2-RTV-3-304A	ISTC-1200(a)
2-RTV-3-305A	ISTC-1200(a)
2-RTV-3-306A	ISTC-1200(a)
2-RTV-3-307A	ISTC-1200(a)
2-DRV-3-513	ISTC-1200(a)

Appendix I - Valves Exempt from the IST Program

Flow Diagram: 2-47W803-3

VALVE ID	EXEMPTION BASIS	VALVE ID	EXEMPTION BASIS	VALVE ID	EXEMPTION BASIS
2-VTV-3-930	ISTC-1200(a)	2-DRV-3-894	ISTC-1200(a)	2-IDV-3-935	ISTA-1100
2-VTV-3-931	ISTC-1200(a)	2-DRV-3-933	ISTC-1200(a)	2-IDV-3-916	ISTC-1200(c)
2-VTV-3-932	ISTC-1200(a)	2-DRV-3-934	ISTC-1200(a)	2-IDV-3-917	ISTC-1200(c)
2-DRV-3-813	ISTC-1200(a)	2-DRV-3-895	ISTC-1200(a)	2-IDV-3-920	ISTC-1200(c)
2-DRV-3-940	ISTC-1200(a)	2-DRV-3-918	ISTC-1200(a)	2-IDV-3-914	ISTC-1200(c)
2-DRV-3-893	ISTC-1200(a)	2-DRV-3-919	ISTC-1200(a)	2-IDV-3-915	ISTC-1200(c)
				2-IDV-3-941	ISTC-1200(c)

Flow Diagram: 2-47W809-1

VALVE ID	EXEMPTION BASIS	VALVE ID	EXEMPTION BASIS	VALVE ID	EXEMPTION BASIS
2-FCV-62-56	ISTA-1100	2-RTV-62-342A	ISTC - 1200(a)	2-FCV-62-9	ISTA-1100
2-DRV-62-755	ISTC-1200(a)	2-RTV-62-343A	ISTC - 1200(a)	2-FCV-62-22	ISTA-1100
2-ISV-62-526	ISTA-1100	2-RTV-62-420A	ISTC - 1200(a)	2-FCV-62-35	ISTA-1100
2-ISV-62-527	ISTC-1200(c)	2-RTV-62-421A	ISTC - 1200(a)	2-FCV-62-48	ISTA-1100
2-DRV-62-521	ISTC-1200(a)	2-RTV-62-426A	ISTC - 1200(a)	2-FCV-62-53	ISTA-1100
2-ISV-62-509	ISTC-1200(c)	2-RTV-62-427A	ISTC - 1200(a)	2-FCV-62-54	ISTA-1100
2-ISV-62-533	ISTC-1200(c)	2-RTV-62-352A	ISTC - 1200(a)	2-FCV-62-55	ISTA-1100
2-ISV-62-510	ISTC-1200(c)	2-RTV-62-353A	ISTC - 1200(a)	2-FCV-62-83	ISTA-1100
2-DRV-62-528	ISTC-1200(a)	2-RTV-62-350A	ISTC - 1200(a)	2-FCV-62-89	ISTA-1100
2-ISV-62-534	ISTC - 1200(c)	2-RTV-62-351A	ISTC - 1200(a)	2-FCV-62-93	ISTC-1200(b)
2-ISV-62-547	ISTC-1200(c)	2-RTV-62-423A	ISTC - 1200(a)	2-FCV-62-125	ISTA-1100
2-ISV-62-548	ISTC-1200(c)	2-RTV-62-424A	ISTC - 1200(a)	2-PCV-62-126	ISTA-1100
2-ISV-62-549	ISTC-1200(c)	2-RTV-62-354A	ISTC - 1200(a)	2-VTV-62-522	ISTC - 1200(a)
2-ISV-62-550	ISTC-1200(c)	2-RTV-62-355A	ISTC - 1200(a)	2-DRV-62-730	ISTA-1100
2-ISV-62-536	ISTC-1200(c)	2-RTV-62-356A	ISTC - 1200(a)	2-DRV-62-731	ISTC-1200(a)
2-BYV-62-680	ISTC - 1200(c)	2-RTV-62-357A	ISTC - 1200(a)	2-LCV-62-118	ISTA-1100
2-ISV-62-535	ISTC-1200(c)	2-RTV-62-358A	ISTC - 1200(a)	2-FCV-62-86	ISTA-1100
2-ISV-62-537	ISTC-1200(c)	2-RTV-62-359A	ISTC - 1200(a)	2-VTV-62-512	ISTC - 1200(a)
2-DRV-62-540	ISTC-1200(a)	2-RTV-62-360A	ISTC - 1200(a)	2-FCV-62-98	ISTC-1200(c)
2-DRV-62-542	ISTC-1200(a)	2-RTV-62-361A	ISTC - 1200(a)	2-TCV-62-79	ISTA-1100
2-DRV-62-553	ISTC-1200(a)	2-RTV-62-362A	ISTC - 1200(a)	2-ISV-62-524	ISTC-1200(c)
2-DRV-62-554	ISTC-1200(a)	2-RTV-62-363A	ISTC - 1200(a)	2-ISV-62-531	ISTC-1200(c)
2-DRV-62-580	ISTC-1200(a)	2-RTV-62-364A	ISTC - 1200(a)	2-FCV-62-99	ISTC-1200(c)
2-DRV-62-581	ISTC-1200(a)	2-RTV-62-429A	ISTC - 1200(a)	2-VTV-62-513	ISTC - 1200(a)

Appendix I - Valves Exempt from the IST Program

VALVE ID	EXEMPTION BASIS
2-DRV-62-582	ISTC-1200(a)
2-DRV-62-583	ISTC-1200(a)
2-DRV-62-646	ISTC-1200(a)
2-DRV-62-651	ISTC-1200(a)
2-DRV-62-655	ISTC-1200(a)
2-DRV-62-664	ISTC-1200(a)
2-DRV-62-665	ISTC-1200(a)
2-DRV-62-666	ISTC-1200(a)
2-DRV-62-667	ISTC-1200(a)
2-DRV-62-678	ISTC - 1200(a)
2-DRV-62-683	ISTC - 1200(a)
2-DRV-62-695	ISTC-1200(a)
2-DRV-62-701	ISTC-1200(a)
2-DRV-62-704	ISTC-1200(a)
2-DRV-62-705	ISTC-1200(a)
2-DRV-62-706	ISTC-1200(a)
2-DRV-62-710	ISTC - 1200(a)
2-DRV-62-711	ISTC - 1200(a)
2-DRV-62-719	ISTA-1100
2-DRV-62-720	ISTC-1200(a)
2-DRV-62-721	ISTA-1100
2-DRV-62-722	ISTC-1200(a)
2-VTV-62-584	ISTC - 1200(a)
2-VTV-62-587	ISTC - 1200(a)
2-VTV-62-600	ISTC-1200(a)
2-VTV-62-603	ISTC-1200(a)
2-BYV-62-546	ISTC - 1200(c)
2-BYV-62-538	ISTC - 1200(c)
2-BYV-62-643	ISTC - 1200(c)
2-BYV-62-648	ISTC - 1200(c)
2-BYV-62-653	ISTC-1200(c)
2-BYV-62-672	ISTC - 1200(c)
2-DRV-62-1235	ISTC-1200(a)
2-DRV-62-501	ISTC-1200(a)
2-DRV-62-502	ISTC-1200(a)

VALVE ID	EXEMPTION BASIS
2-RTV-62-430A	ISTC - 1200(a)
2-RTV-62-432A	ISTC - 1200(a)
2-RTV-62-433A	ISTC - 1200(a)
2-RTV-62-435A	ISTC - 1200(a)
2-RTV-62-436A	ISTC - 1200(a)
2-RTV-62-438A	ISTC - 1200(a)
2-RTV-62-439A	ISTC - 1200(a)
2-RTV-62-441A	ISTC - 1200(a)
2-RTV-62-442A	ISTC - 1200(a)
2-SMV-62-674	ISTC - 1200(c)
2-SMV-62-677	ISTC - 1200(a)
2-SMV-62-689	ISTC - 1200(c)
2-TV-62-544	ISTC - 1200(a)
2-TV-62-545	ISTC - 1200(a)
2-TV-62-606	ISTC - 1200(a)
2-TV-62-607	ISTC - 1200(a)
2-TV-62-555	ISTC - 1200(a)
2-TV-62-615	ISTC - 1200(a)
2-TV-62-568	ISTC - 1200(a)
2-TV-62-569	ISTC - 1200(a)
2-TV-62-570	ISTC - 1200(a)
2-TV-62-571	ISTC - 1200(a)
2-TV-62-572	ISTC - 1200(a)
2-TV-62-573	ISTC - 1200(a)
2-TV-62-574	ISTC - 1200(a)
2-TV-62-575	ISTC - 1200(a)
2-TV-62-611	ISTC - 1200(a)
2-TV-62-612	ISTC - 1200(a)
2-TV-62-613	ISTC - 1200(a)
2-TV-62-614	ISTC - 1200(a)
2-TV-62-616	ISTC - 1200(a)
2-TV-62-617	ISTC - 1200(a)
2-TV-62-618	ISTC - 1200(a)
2-RTV-62-309A	ISTC - 1200(a)
2-RTV-62-312A	ISTC - 1200(a)

VALVE ID	EXEMPTION BASIS
2-FCV-62-59	ISTA-1100
2-FCV-62-85	ISTA-1100
2-VTV-62-529	ISTC - 1200(a)
2-VTV-62-551	ISTC - 1200(a)
2-VTV-62-552	ISTC - 1200(a)
2-VTV-62-585	ISTC - 1200(a)
2-VTV-62-586	ISTC - 1200(a)
2-VTV-62-601	ISTC-1200(a)
2-VTV-62-602	ISTC-1200(a)
2-VTV-62-645	ISTC - 1200(a)
2-VTV-62-682	ISTC - 1200(a)
2-VTV-62-699	ISTC - 1200(a)
2-TV-62-619	ISTC - 1200(a)
2-TV-62-604	ISTC - 1200(a)
2-TV-62-708	ISTC - 1200(a)
2-TV-62-605	ISTC - 1200(a)
2-TV-62-707	ISTC - 1200(a)
2-TV-62-608	ISTC - 1200(a)
2-TV-62-637	ISTC - 1200(a)
2-TV-62-609	ISTC - 1200(a)
2-TV-62-641	ISTC - 1200(a)
2-TV-62-610	ISTC - 1200(a)
2-TV-62-700	ISTC - 1200(a)
2-TV-62-663	ISTC - 1200(a)
2-TV-62-717	ISTC - 1200(a)
2-TV-62-715	ISTC - 1200(c)
2-VTV-62-503	ISTC - 1200(a)
2-CKV-62-590	ISTA-1100
2-CKV-62-591	ISTA-1100
2-CKV-62-694	ISTA-1100
2-ISV-62-698	ISTA-1100
2-SMV-62-676	ISTA-1100
2-CKV-62-589	ISTA-1100
2-ISV-62-687	ISTA-1100
2-DRV-62-541	ISTC-1200(a)

Appendix I - Valves Exempt from the IST Program

VALVE ID	EXEMPTION BASIS
2-ISV-62-565	ISTC-1200(c)
2-ISV-62-566	ISTC-1200(c)
2-ISV-62-642	ISTA-1100
2-ISV-62-644	ISTA-1100
2-ISV-62-647	ISTC-1200(c)
2-ISV-62-650	ISTC-1200(c)
2-ISV-62-652	ISTC-1200(c)
2-ISV-62-669	ISTC - 1200(c)
2-ISV-62-671	ISTC - 1200(c)
2-ISV-62-673	ISTC - 1200(c)
2-ISV-62-679	ISTC - 1200(c)
2-ISV-62-681	ISTC - 1200(c)
2-ISV-62-686	ISTC - 1200(c)
2-ISV-62-690	ISTC - 1200(c)
2-ISV-62-718	ISTC - 1200(c)
2-RTV-62-304A	ISTC - 1200(a)
2-RTV-62-305A	ISTC - 1200(a)
2-RTV-62-306A	ISTC - 1200(a)
2-RTV-62-307A	ISTC - 1200(a)
2-RTV-62-308A	ISTC - 1200(a)

VALVE ID	EXEMPTION BASIS
2-RTV-62-313A	ISTC-1200(a)
2-RTV-62-314A	ISTC - 1200(a)
2-RTV-62-315A	ISTC - 1200(a)
2-RTV-62-316A	ISTC - 1200(a)
2-RTV-62-317A	ISTC - 1200(a)
2-RTV-62-320A	ISTC - 1200(a)
2-RTV-62-321A	ISTC - 1200(a)
2-RTV-62-322A	ISTC-1200(a)
2-RTV-62-323A	ISTC - 1200(a)
2-RTV-62-328A	ISTC - 1200(a)
2-RTV-62-329A	ISTC - 1200(a)
2-RTV-62-330A	ISTC - 1200(a)
2-RTV-62-331A	ISTC - 1200(a)
2-RTV-62-332A	ISTC - 1200(a)
2-RTV-62-333A	ISTC - 1200(a)
2-RTV-62-334A	ISTC - 1200(a)
2-RTV-62-335A	ISTC - 1200(a)
2-RTV-62-336A	ISTC - 1200(a)
2-RTV-62-337A	ISTC - 1200(a)
2-RTV-62-341A	ISTC - 1200(a)

VALVE ID	EXEMPTION BASIS
2-DRV-62-703	ISTC-1200(a)
2-ISV-62-500	ISTC-1200(c)
2-ISV-62-696	ISTA-1100
2-CKV-62-507	ISTA-1100
2-CKV-62-658	ISTA-1100
2-CKV-62-588	ISTA-1100
2-CKV-62-684	ISTA-1100
2-ISV-62-709	ISTA-1100
2-ISV-62-539	ISTC-1200(c)
2-CKV-62-697	ISTA-1100
2-CKV-62-592	ISTA-1100
2-CKV-62-593	ISTA-1100
2-CKV-62-594	ISTA-1100
2-CKV-62-595	ISTA-1100
2-RFV-62-688	ISTA-1100
2-ISV-62-564	ISTC-1200(c)
2-ISV-62-567	ISTC-1200(c)
2-INJ-62-557	ISTC-1200(b)
2-INJ-62-558	ISTC-1200(b)
2-INJ-62-559	ISTC-1200(b)
2-INJ-62-556	ISTC-1200(b)

Appendix I - Valves Exempt from the IST Program

Flow Diagram: 2-47W809-2

VALVE ID	EXEMPTION BASIS	VALVE ID	EXEMPTION BASIS	VALVE ID	EXEMPTION BASIS
2-ISV-62-901	ISTC - 1200(c)	2-FCV-62-144	ISTA-1100	2-RTV-62-445A	ISTC-1200(a)
2-ISV-62-902	ISTC - 1200(c)	2-RTV-62-365A	ISTC - 1200(a)	2-RTV-62-446A	ISTC-1200(a)
2-ISV-62-908	ISTC - 1200(c)	2-ISV-62-904	ISTA-1100	2-CKV-62-900	ISTA-1100
2-ISV-62-909	ISTC - 1200(c)	2-ISV-62-905	ISTA-1100	2-VTV-62-903	ISTA-1100
2-ISV-62-915	ISTC - 1200(c)	2-ISV-62-911	ISTA-1100	2-DRV-62-906	ISTA-1100
2-ISV-62-916	ISTC - 1200(c)	2-ISV-62-912	ISTA-1100	2-FLV-62-907	ISTA-1100
2-ISV-62-918	ISTC - 1200(a)	2-ISV-62-919	ISTA-1100	2-VTV-62-910	ISTA-1100
2-ISV-62-922	ISTC - 1200(c)	2-CKV-62-928	ISTA-1100	2-DRV-62-913	ISTA-1100
2-ISV-62-927	ISTC - 1200(c)	2-ISV-62-929	ISTA-1100	2-FLV-62-914	ISTA-1100
2-CKV-62-930	ISTA-1100	2-CKV-62-931	ISTA-1100	2-VTV-62-917	ISTA-1100
2-ISV-62-932	ISTC - 1200(c)	2-CKV-62-937	ISTA-1100	2-DRV-62-920	ISTA-1100
2-ISV-62-936	ISTC - 1200(c)	2-ISV-62-938	ISTA-1100	2-FLV-62-921	ISTA-1100
2-RTV-62-347A	ISTC - 1200(a)	2-CKV-62-1075	ISTA-1100	2-ISV-62-944	ISTC-1200(c)
2-RTV-62-348A	ISTC - 1200(a)	2-FCV-62-140	ISTA-1100	2-SMV-62-939	ISTC-1200(a)
		2-FCV-62-128	ISTA-1100	2-FCV-62-138	ISTA-1100

Flow Diagram: 2-47W810-1

VALVE ID	EXEMPTION BASIS	VALVE ID	EXEMPTION BASIS	VALVE ID	EXEMPTION BASIS
2-HCV-74-36	ISTC-1200(b)	2-SMV-74-532	ISTC - 1200(a)	2-VTV-74-10	ISTC - 1200(a)
2-HCV-74-37	ISTC-1200(b)	2-SMV-74-522	ISTC - 1200(a)	2-VTV-74-20	ISTC - 1200(a)
2-ISV-74-501	ISTC - 1200(a)	2-RTV-74-103A	ISTC - 1200(a)	2-FCV-74-32	ISTA-1100
2-ISV-74-506	ISTC - 1200(a)	2-RTV-74-104A	ISTC - 1200(a)	2-HCV-74-34	ISTC-1200(c)
2-FLV-74-512	ISTC-1200(c)	2-RTV-74-107A	ISTC - 1200(a)	2-VTV-74-41	ISTC - 1200(a)
2-ISV-74-524	ISTC - 1200(c)	2-RTV-74-108A	ISTC - 1200(a)	2-VTV-74-42	ISTC - 1200(a)
2-RTV-74-100A	ISTC - 1200(a)	2-RTV-74-109A	ISTC - 1200(a)	2-VTV-74-538	ISTC - 1200(a)
2-RTV-74-101A	ISTC - 1200(a)	2-RTV-74-110A	ISTC - 1200(a)	2-SPV-74-530	ISTC-1200(a)
2-RTV-74-102A	ISTC - 1200(a)	2-RTV-74-111A	ISTC - 1200(a)	2-ISV-74-520	ISTC-1200(c)
2-FLV-74-513	ISTC-1200(c)	2-SMV-74-523	ISTC - 1200(a)	2-ISV-74-521	ISTC-1200(c)
2-ISV-74-518	ISTC - 1200(a)	2-SMV-74-533	ISTC - 1200(a)	2-ISV-74-525	ISTC-1200(c)
2-ISV-74-527	ISTC - 1200(a)	2-TV-74-504	ISTC - 1200(a)	2-VTV-74-536	ISTC - 1200(a)
2-SPV-74-531	ISTC-1200(a)	2-TV-74-543	ISTC - 1200(a)	2-DRV-74-500	ISTC - 1200(a)
		2-DRV-74-503	ISTC - 1200(a)	2-VTV-74-539	ISTC - 1200(a)

Flow Diagram: 2-47W811-1

Appendix I - Valves Exempt from the IST Program

VALVE ID	EXEMPTION BASIS
2-RTV-63-371A	ISTC - 1200(a)
2-RTV-63-372A	ISTC - 1200(a)
2-ISV-63-434	ISTC - 1200(c)
2-ISV-63-435	ISTC - 1200(c)
2-ISV-63-436	ISTC - 1200(c)
2-ISV-63-439	ISTC - 1200(c)
2-DRV-63-691A	ISTC-1200(a)
2-DRV-63-597	ISTC - 1200(a)
2-ISV-63-525	ISTC-1200(c)
2-DRV-63-519	ISTC-1200(a)
2-DRV-63-658	ISTC-1200(a)
2-RTV-63-315A	ISTC - 1200(a)
2-RTV-63-316A	ISTC - 1200(a)
2-RTV-63-311A	ISTC - 1200(a)
2-RTV-63-312A	ISTC - 1200(a)
2-RTV-63-337A	ISTC - 1200(a)
2-RTV-63-338A	ISTC - 1200(a)
2-DRV-63-700	ISTC-1200(a)
2-DRV-63-514	ISTC-1200(a)
2-DRV-63-705	ISTC-1200(a)
2-RTV-63-339A	ISTC - 1200(a)
2-RTV-63-340A	ISTC - 1200(a)
2-RTV-63-313A	ISTC - 1200(a)
2-RTV-63-314A	ISTC - 1200(a)
2-RTV-63-302A	ISTC - 1200(a)
2-RTV-63-304A	ISTC - 1200(a)
2-RTV-63-307A	ISTC - 1200(a)
2-RTV-63-308A	ISTC - 1200(a)
2-RTV-63-317A	ISTC - 1200(a)
2-RTV-63-318A	ISTC - 1200(a)
2-DRV-63-509	ISTC - 1200(a)
2-ISV-63-527	ISTC-1200(c)
2-DRV-63-650	ISTC-1200(a)
2-DRV-63-596	ISTC - 1200(a)
2-DRV-63-699	ISTC-1200(a)

VALVE ID	EXEMPTION BASIS
2-VTV-63-16	ISTC - 1200(a)
2-VTV-63-17	ISTC - 1200(a)
2-RTV-63-409A	ISTC - 1200(a)
2-RTV-63-410A	ISTC - 1200(a)
2-RTV-63-389A	ISTC - 1200(a)
2-RTV-63-390A	ISTC - 1200(a)
2-TV-63-628	ISTC - 1200(a)
2-TV-63-505	ISTC - 1200(a)
2-TV-63-537	ISTC - 1200(a)
2-TV-63-538	ISTC - 1200(a)
2-TV-63-684	ISTC - 1200(a)
2-TV-63-687	ISTC-1200(a)
2-TV-63-696	ISTC-1200(a)
2-TV-63-697	ISTC-1200(a)
2-VTV-63-30	ISTC - 1200(a)
2-VTV-63-54	ISTC - 1200(a)
2-VTV-63-105	ISTC - 1200(a)
2-VTV-63-113	ISTC - 1200(a)
2-VTV-63-101	ISTC - 1200(a)
2-VTV-63-155	ISTC - 1200(a)
2-VTV-63-168	ISTC - 1200(a)
2-VTV-63-169	ISTC - 1200(a)
2-VTV-63-171	ISTC - 1200(a)
2-TV-63-681	ISTC - 1200(a)
2-VTV-63-34	ISTC - 1200(a)
2-TV-63-693	ISTC-1200(a)
2-TV-63-694	ISTC-1200(a)
2-TV-63-508	ISTC - 1200(a)
2-TV-63-629	ISTC - 1200(a)
2-TV-63-540	ISTC - 1200(a)
2-RTV-63-391A	ISTC - 1200(a)
2-RTV-63-392A	ISTC - 1200(a)
2-RTV-63-387A	ISTC - 1200(a)
2-RTV-63-388A	ISTC - 1200(a)
2-SMV-63-532	ISTC - 1200(a)

VALVE ID	EXEMPTION BASIS
2-ISV-63-72	ISTC-1200(c)
2-ISV-63-73	ISTC-1200(c)
2-ISV-63-172	ISTC-1200(c)
2-ISIV-63-180B	ISTC-1200(a)
2-ISIV-63-181B	ISTC-1200(a)
2-ISIV-63-182B	ISTC-1200(a)
2-ISIV-63-183B	ISTC-1200(a)
2-ISV-63-441	ISTA-1100
2-ISV-63-518	ISTC-1200(c)
2-TV-63-541	ISTA-1100
2-THV-63-542	ISTC-1200(b)
2-THV-63-544	ISTC-1200(b)
2-FCV-63-39	ISTC-1200(c)
2-RTV-63-306A	ISTC-1200(a)
2-RTV-63-301A	ISTC-1200(a)
2-TV-63-688	ISTC-1200(a)
2-VTV-63-727	ISTC - 1200(a)
2-VTV-63-728	ISTC - 1200(a)
2-TV-63-630	ISTA-1100
2-RTV-63-303A	ISTC-1200(a)
2-RTV-63-342A	ISTC-1200(a)
2-RTV-63-305A	ISTC-1200(a)
2-VTV-63-179	ISTC - 1200(a)
2-VTV-63-184	ISTC - 1200(a)
2-VTV-63-420	ISTC - 1200(a)
2-VTV-63-421	ISTC - 1200(a)
2-VTV-63-517	ISTC - 1200(a)
2-VTV-63-423	ISTC - 1200(a)
2-VTV-63-512	ISTC - 1200(a)
2-VTV-63-422	ISTC - 1200(a)
2-VTV-63-193	ISTC - 1200(a)
2-VTV-63-194	ISTC - 1200(a)
2-VTV-63-730	ISTC - 1200(a)
2-VTV-63-729	ISTC - 1200(a)
2-TV-63-504	ISTA-1100

Appendix I - Valves Exempt from the IST Program

VALVE ID	EXEMPTION BASIS
2-DRV-63-691	ISTC - 1200(a)
2-DRV-63-652	ISTC-1200(a)
2-DRV-63-653	ISTC - 1200(a)
2-DRV-63-655	ISTC-1200(a)
2-DRV-63-656	ISTC-1200(a)
2-ISV-63-610	ISTC - 1200(c)
2-ISV-63-611	ISTC - 1200(c)
2-ISV-63-612	ISTC - 1200(c)
2-ISV-63-613	ISTC - 1200(c)
2-ISV-63-618	ISTC - 1200(c)
2-ISV-63-619	ISTC - 1200(c)
2-ISV-63-620	ISTC - 1200(c)
2-ISV-63-621	ISTC - 1200(c)
2-DRV-63-506	ISTC-1200(a)
2-DRV-63-507	ISTC-1200(a)
2-DRV-63-520	ISTC - 1200(a)
2-DRV-63-533	ISTC-1200(a)
2-DRV-63-568	ISTC-1200(a)
2-DRV-63-667	ISTC-1200(a)
2-DRV-63-668	ISTC-1200(a)
2-DRV-63-669	ISTC-1200(a)
2-DRV-63-670	ISTC-1200(a)
2-DRV-63-671	ISTC-1200(a)
2-DRV-63-672	ISTC-1200(a)
2-DRV-63-673	ISTC-1200(a)
2-DRV-63-674	ISTC-1200(a)
2-DRV-63-686	ISTC-1200(a)
2-RTV-63-319A	ISTC - 1200(a)
2-RTV-63-320A	ISTC - 1200(a)
2-RTV-63-321A	ISTC - 1200(a)
2-RTV-63-322A	ISTC - 1200(a)
2-RTV-63-323A	ISTC - 1200(a)
2-RTV-63-324A	ISTC - 1200(a)
2-RTV-63-325A	ISTC - 1200(a)
2-RTV-63-326A	ISTC - 1200(a)

VALVE ID	EXEMPTION BASIS
2-SMV-63-569	ISTC - 1200(a)
2-SMV-63-578	ISTC - 1200(a)
2-SMV-63-600	ISTC - 1200(a)
2-RTV-63-374A	ISTC - 1200(a)
2-RTV-63-375A	ISTC - 1200(a)
2-RTV-63-376A	ISTC - 1200(a)
2-RTV-63-379A	ISTC - 1200(a)
2-RTV-63-382A	ISTC - 1200(a)
2-RTV-63-393A	ISTC - 1200(a)
2-RTV-63-394A	ISTC - 1200(a)
2-RTV-63-395A	ISTC - 1200(a)
2-RTV-63-396A	ISTC - 1200(a)
2-RTV-63-397A	ISTC - 1200(a)
2-RTV-63-398A	ISTC - 1200(a)
2-RTV-63-399A	ISTC - 1200(a)
2-RTV-63-400A	ISTC - 1200(a)
2-RTV-63-401A	ISTC - 1200(a)
2-RTV-63-402A	ISTC - 1200(a)
2-RTV-63-403A	ISTC - 1200(a)
2-RTV-63-404A	ISTC - 1200(a)
2-RTV-63-405A	ISTC - 1200(a)
2-RTV-63-406A	ISTC - 1200(a)
2-RTV-63-407A	ISTC - 1200(a)
2-RTV-63-408A	ISTC - 1200(a)
2-TV-63-565	ISTC - 1200(a)
2-TV-63-575	ISTC - 1200(a)
2-TV-63-590	ISTC - 1200(a)
2-TV-63-591	ISTC - 1200(a)
2-TV-63-592	ISTC - 1200(a)
2-TV-63-593	ISTC - 1200(a)
2-TV-63-594	ISTC - 1200(a)
2-TV-63-595	ISTC - 1200(a)
2-TV-63-599	ISTC - 1200(a)
2-TV-63-636	ISTC - 1200(a)
2-TV-63-675	ISTC - 1200(a)

VALVE ID	EXEMPTION BASIS
2-TV-63-682	ISTC-1200(a)
2-TV-63-631	ISTA-1100
2-THV-63-546	ISTC-1200(b)
2-THV-63-548	ISTC-1200(b)
2-FCV-63-40	ISTC-1200(c)
2-THV-63-556	ISTC-1200(b)
2-THV-63-550	ISTC-1200(b)
2-THV-63-552	ISTC-1200(b)
2-THV-63-585	ISTC-1200(b)
2-THV-63-582	ISTC-1200(b)
2-THV-63-583	ISTC-1200(b)
2-THV-63-584	ISTC-1200(b)
2-SMV-63-614	ISTA-1100
2-RTV-63-378A	ISTC-1200(a)
2-THV-63-554	ISTC-1200(b)
2-TV-63-501	ISTC-1200(a)
2-TV-63-503	ISTC-1200(a)
2-SMV-63-617	ISTA-1100
2-DRV-63-690	ISTC-1200(a)
2-RTV-63-377A	ISTC-1200(a)
2-RTV-63-363A	ISTC-1200(a)
2-RTV-63-364A	ISTC-1200(a)
2-VTV-63-500	ISTC-1200(a)
2-VTV-63-638	ISTC-1200(a)
2-VTV-63-154	ISTC-1200(a)
2-ISV-63-601	ISTA-1100
2-SMV-63-615	ISTA-1100
2-SMV-63-616	ISTA-1100
2-RTV-63-351A	ISTC-1200(a)
2-RTV-63-353A	ISTC-1200(a)
2-RTV-63-354A	ISTC-1200(a)
2-RTV-63-383A	ISTC-1200(a)
2-RTV-63-381A	ISTC-1200(a)
2-RTV-63-385A	ISTC-1200(a)
2-RTV-63-344A	ISTC-1200(a)

Appendix I - Valves Exempt from the IST Program

VALVE ID	EXEMPTION BASIS
2-RTV-63-327A	ISTC - 1200(a)
2-RTV-63-328A	ISTC - 1200(a)
2-RTV-63-329A	ISTC - 1200(a)
2-RTV-63-330A	ISTC - 1200(a)
2-RTV-63-331A	ISTC - 1200(a)
2-RTV-63-332A	ISTC - 1200(a)
2-RTV-63-333A	ISTC - 1200(a)
2-RTV-63-334A	ISTC - 1200(a)
2-RTV-63-309A	ISTC - 1200(a)
2-RTV-63-310A	ISTC - 1200(a)
2-RTV-63-345A	ISTC - 1200(a)
2-RTV-63-346A	ISTC - 1200(a)
2-RTV-63-355A	ISTC - 1200(a)
2-RTV-63-356A	ISTC - 1200(a)
2-RTV-63-357A	ISTC - 1200(a)
2-RTV-63-358A	ISTC - 1200(a)
2-RTV-63-359A	ISTC - 1200(a)
2-RTV-63-360A	ISTC - 1200(a)
2-RTV-63-361A	ISTC - 1200(a)
2-RTV-63-362A	ISTC - 1200(a)
2-RTV-63-373A	ISTC - 1200(a)

VALVE ID	EXEMPTION BASIS
2-TV-63-676	ISTC-1200(a)
2-TV-63-677	ISTC - 1200(a)
2-TV-63-678	ISTC-1200(a)
2-TV-63-680	ISTC-1200(a)
2-TV-63-513	ISTC - 1200(a)
2-TV-63-515	ISTC - 1200(a)
2-TV-63-529	ISTC - 1200(a)
2-TV-63-685	ISTC-1200(a)
2-TV-63-539	ISTC - 1200(a)
2-TV-63-692	ISTC-1200(a)
2-TV-63-703	ISTC-1200(a)
2-TV-63-704	ISTC-1200(a)
2-TV-63-706	ISTC-1200(a)
2-TV-63-707	ISTC - 1200(a)
2-TV-63-709	ISTC-1200(a)
2-VTV-63-55	ISTC - 1200(a)
2-VTV-63-85	ISTC - 1200(a)
2-VTV-63-32	ISTC - 1200(a)
2-VTV-63-114	ISTC - 1200(a)
2-VTV-63-142	ISTC - 1200(a)
2-VTV-63-143	ISTC - 1200(a)

VALVE ID	EXEMPTION BASIS
2-RTV-63-386A	ISTC-1200(a)
2-RTV-63-350A	ISTC-1200(a)
2-RTV-63-352A	ISTC-1200(a)
2-RTV-63-384A	ISTC-1200(a)
2-RTV-63-365A	ISTC-1200(a)
2-RTV-63-349A	ISTC-1200(a)
2-RTV-63-366A	ISTC-1200(a)
2-RTV-63-380A	ISTC-1200(a)
2-VTV-63-176	ISTC - 1200(a)
2-VTV-63-178	ISTC - 1200(a)
2-VTV-63-424	ISTC - 1200(a)
2-VTV-63-189	ISTC - 1200(a)
2-VTV-63-190	ISTC - 1200(a)
2-VTV-63-191	ISTC - 1200(a)
2-VTV-63-192	ISTC - 1200(a)
2-VTV-63-425	ISTC - 1200(a)
2-VTV-63-606	ISTC - 1200(a)
2-VTV-63-607	ISTC - 1200(a)
2-VTV-63-608	ISTC - 1200(a)
2-VTV-63-609	ISTC - 1200(a)
2-VTV-63-651	ISTC - 1200(a)
2-VTV-63-720	ISTC - 1200(a)

Appendix I - Valves Exempt from the IST Program

Flow Diagram: 2-47W812-1

VALVE ID	EXEMPTION BASIS
2-ISV-72-41	ISTC-1200(a)
2-DRV-72-556	ISTC-1200(a)
2-FLV-72-510	ISTC-1200(c)
2-FLV-72-522	ISTC-1200(c)
2-ISV-72-503	ISTC-1200(a)
2-ISV-72-528	ISTC - 1200(c)
2-DRV-72-542	ISTC-1200(a)
2-RTV-72-213A	ISTC-1200(a)
2-RTV-72-208A	ISTC-1200(a)
2-RTV-72-211A	ISTC-1200(a)
2-RTV-72-214A	ISTC - 1200(a)
2-RTV-72-209A	ISTC-1200(a)
2-RTV-72-212A	ISTC - 1200(a)
2-RTV-72-207A	ISTC - 1200(a)
2-RTV-72-203A	ISTC-1200(a)
2-RTV-72-206A	ISTC - 1200(a)
2-DRV-72-543	ISTC-1200(a)
2-ISV-72-529	ISTC - 1200(c)
2-RTV-72-201A	ISTC-1200(a)
2-RTV-72-202A	ISTC - 1200(a)
2-ISV-72-504	ISTC-1200(a)
2-DRV-72-557	ISTC-1200(a)
2-FLV-72-511	ISTC-1200(c)
2-FLV-72-523	ISTC-1200(c)
2-RTV-72-216A	ISTC-1200(a)
2-RTV-72-215A	ISTC - 1200(a)

VALVE ID	EXEMPTION BASIS
2-VTV-72-10	ISTC - 1200(a)
2-VTV-72-11	ISTC - 1200(a)
2-RTV-72-210A	ISTC - 1200(a)
2-TV-72-550	ISTC-1200(a)
2-DRV-72-570	ISTC-1200(a)
2-VTV-72-540	ISTC - 1200(a)
2-VTV-72-536	ISTC-1200(a)
2-VTV-72-532	ISTC-1200(a)
2-TV-72-552	ISTC-1200(a)
2-TV-72-564	ISTC-1200(a)
2-DRV-72-530	ISTC-1200(a)
2-DRV-72-526	ISTC-1200(a)
2-DRV-72-512	ISTC-1200(a)
2-VTV-72-541	ISTC - 1200(a)
2-DRV-72-539	ISTC-1200(a)
2-VTV-72-537	ISTC-1200(a)
2-VTV-72-535	ISTC-1200(a)
2-VTV-72-533	ISTC-1200(a)
2-DRV-72-531	ISTC-1200(a)
2-DRV-72-527	ISTC-1200(a)
2-DRV-72-513	ISTC-1200(a)
2-RTV-72-204A	ISTC-1200(a)
2-RTV-72-205A	ISTC-1200(a)
2-TV-72-553	ISTC - 1200(a)
2-TV-72-551	ISTC-1200(a)
2-VTV-72-567	ISTC - 1200(a)

VALVE ID	EXEMPTION BASIS
2-ISV-72-44	ISTC-1200(c)
2-ISV-72-45	ISTC-1200(c)
2-DRV-72-556	ISTA-1100
2-TV-72-560	ISTC-1200(a)
2-TV-72-544	ISTC-1200(a)
2-TV-72-546	ISTC-1200(a)
2-TV-72-558	ISTC-1200(a)
2-DRV-72-520	ISTC-1200(a)
2-VTV-72-568	ISTC - 1200(a)
2-DRV-72-538	ISTC-1200(a)
2-VTV-72-534	ISTC-1200(a)
2-DRV-72-554	ISTC-1200(a)
2-DRV-72-542	ISTA-1100
2-VTV-72-514	ISTC-1200(a)
2-VTV-72-515	ISTC-1200(a)
2-DRV-72-555	ISTC-1200(a)
2-TV-72-565	ISTC-1200(a)
2-DRV-72-521	ISTC-1200(a)
2-TV-72-559	ISTC-1200(a)
2-TV-72-545	ISTC-1200(a)
2-TV-72-561	ISTC-1200(a)
2-TV-72-547	ISTC-1200(a)
2-ISV-72-501	ISTC-1200(c)
2-ISV-72-500	ISTC-1200(c)
2-ISV-72-502	ISTA-1100

Appendix I - Valves Exempt from the IST Program

Flow Diagram: 2-47W813-1

VALVE ID	EXEMPTION BASIS	VALVE ID	EXEMPTION BASIS	VALVE ID	EXEMPTION BASIS
2-RTV-68-401A	ISTC - 1200(a)	2-RTV-68-424A	ISTC - 1200(c)	2-PCV-68-340B	ISTA-1100
2-RTV-68-402A	ISTC - 1200(a)	2-RTV-68-428A	ISTC - 1200(a)	2-PCV-68-340D	ISTA-1100
2-RTV-68-403A	ISTC - 1200(a)	2-RTV-68-429A	ISTC - 1200(a)	2-RTV-68-387A	ISTC-1200(a)
2-RTV-68-404A	ISTC - 1200(c)	2-RTV-68-431A	ISTC - 1200(a)	2-DRV-68-549	ISTC-1200(a)
2-RTV-68-407A	ISTC - 1200(a)	2-RTV-68-432A	ISTC - 1200(a)	2-DRV-68-550	ISTC-1200(a)
2-RTV-68-411A	ISTC - 1200(a)	2-RTV-68-433A	ISTC - 1200(a)	2-DRV-68-553	ISTC-1200(a)
2-RTV-68-412A	ISTC - 1200(a)	2-RTV-68-434A	ISTC - 1200(c)	2-DRV-68-554	ISTC-1200(a)
2-RTV-68-413A	ISTC - 1200(a)	2-RTV-68-441A	ISTC - 1200(c)	2-DRV-68-557	ISTC-1200(a)
2-RTV-68-414A	ISTC - 1200(c)	2-RTV-68-442A	ISTC - 1200(a)	2-DRV-68-558	ISTC-1200(a)
2-RTV-68-421A	ISTC - 1200(a)	2-RTV-68-443A	ISTC - 1200(a)	2-TV-68-560	ISTC - 1200(a)
2-RTV-68-422A	ISTC - 1200(a)	2-RTV-68-444A	ISTC - 1200(a)	2-TV-68-561	ISTC - 1200(a)
2-RTV-68-423A	ISTC - 1200(a)	2-RTV-68-445A	ISTC - 1200(a)	2-SMV-68-575	ISTA-1100
2-LOV-68-501	ISTC - 1200(c)	2-RTV-68-446A	ISTC - 1200(a)	2-VTV-68-577	ISTC - 1200(a)
2-LOV-68-502	ISTC - 1200(c)	2-RTV-68-454A	ISTC - 1200(a)	2-ISV-68-579	ISTA-1100
2-DRV-68-503	ISTC-1200(a)	2-SMV-68-548	ISTC - 1200(c)	2-ISV-68-580	ISTA-1100
2-DRV-68-551	ISTC-1200(a)	2-TV-68-556	ISTC - 1200(a)	2-DRV-68-581	ISTC-1200(a)
2-BYV-68-552	ISTC - 1200(c)	2-RTV-68-569A	ISTC - 1200(a)	2-DRV-68-582	ISTC-1200(a)
2-BYV-68-555	ISTC - 1200(c)	2-SMV-68-576	ISTC - 1200(c)	2-VTV-68-594	ISTC - 1200(a)
2-DRV-68-593	ISTA-1100	2-SMV-68-578	ISTC - 1200(c)	2-VTV-68-604	ISTC - 1200(a)
2-DRV-68-700	ISTC-1200(a)	2-TV-68-601	ISTC - 1200(a)	2-VTV-68-500	ISTC - 1200(c)
2-ISV-68-1107	ISTC-1200(a)	2-RTV-68-455A	ISTC - 1200(a)	2-VTV-68-607	ISTC - 1200(c)
2-ISV-68-1108	ISTC-1200(a)	2-RTV-68-453A	ISTC - 1200(a)	2-VTV-68-603	ISTC - 1200(a)

Flow Diagram: 2-47W814-2

VALVE ID	EXEMPTION BASIS	VALVE ID	EXEMPTION BASIS	VALVE ID	EXEMPTION BASIS
2-TV-61-532	ISTC-1200(a)	2-TV-61-681	ISTC-1200(a)	2-TV-61-691	ISTC-1200(a)
				2-TV-61-746	ISTC-1200(a)

Appendix I - Valves Exempt from the IST Program

Flow Diagram: 2-47W839-1B

VALVE ID	EXEMPTION BASIS
2-CKV-82-756A2	ISTC-1200skid
2-ISIV-82-5068B	ISTC-1200(a)
2-ISIV-82-5069B	ISTC-1200(a)
2-ISV-82-506A1	ISTA-1100
2-ISV-82-540A2	ISTA-1100
2-CKV-82-753A1	ISTC-1200skid
2-CKV-82-754A1	ISTC-1200skid
2-CKV-82-755A2	ISTC-1200skid
2-CKV-82-505A1	ISTC-1200skid
2-CKV-82-539A2	ISTC-1200skid
2-CKV-82-536A2	ISTC-1200skid
2-CKV-82-502A1	ISTC-1200skid
2-CKV-82-543A2	ISTC-1200skid
2-CKV-82-509A1	ISTC-1200skid
2-CKV-82-565A2	ISTC-1200skid
2-CKV-82-531A1	ISTC-1200skid
2-CKV-82-523A1	ISTC-1200skid
2-CKV-82-557A2	ISTC-1200skid
2-FCV-82-231	ISTC-1200skid
2-FCV-82-220	ISTC-1200skid
2-FCV-82-230	ISTC-1200skid
2-FCV-82-221	ISTC-1200skid
2-FSV-82-220	ISTC-1200skid

VALVE ID	EXEMPTION BASIS
2-FSV-82-230	ISTC-1200skid
2-FSV-82-231	ISTC-1200skid
2-FSV-82-221	ISTC-1200skid
2-ISV-82-537A2	ISTA-1100
2-ISV-82-503A1	ISTA-1100
2-ISV-82-542A2	ISTC-1200(c)
2-ISV-82-508A1	ISTC-1200(c)
2-ISV-82-510A1	ISTC-1200(c)
2-ISV-82-544A1	ISTC-1200(c)
2-ISV-82-546A2	ISTA-1100
2-ISV-82-512A1	ISTA-1100
2-ISV-82-514A1	ISTA-1100
2-ISV-82-548A2	ISTA-1100
2-ISV-82-551A2	ISTC-1200(c)
2-ISV-82-528A1	ISTC-1200(c)
2-ISV-82-559A2	ISTC-1200(c)
2-ISV-82-517A1	ISTC-1200(c)
2-ISV-82-520A1	ISTC-1200(c)
2-ISV-82-554A2	ISTC-1200(c)
2-ISV-82-525A1	ISTC-1200(c)
2-ISV-82-562A2	ISTC-1200(c)
2-LOV-82-549A2	ISTC-1200(a)
2-LOV-82-515A1	ISTC-1200(a)

VALVE ID	EXEMPTION BASIS
2-LOV-82-516A1	ISTC-1200(a)
2-LOV-82-550A2	ISTC-1200(a)
2-PREG-82-223B	ISTC-1200skid
2-PREG-82-233B	ISTC-1200skid
2-PREG-82-222B	ISTC-1200skid
2-PREG-82-232B	ISTC-1200skid
2-RTV-82-400A	ISTC-1200(a)
2-RTV-82-402A	ISTC-1200(a)
2-RTV-82-404A	ISTC-1200(a)
2-RTV-82-407A	ISTC-1200(a)
2-RTV-82-403A	ISTC-1200(a)
2-RTV-82-401A	ISTC-1200(a)
2-RTV-82-406A	ISTC-1200(a)
2-RTV-82-405A	ISTC-1200(a)
2-PCV-82-233A	ISTC-1200skid
2-PCV-82-223A	ISTC-1200skid
2-PCV-82-232A	ISTC-1200skid
2-PCV-82-222A	ISTC-1200skid
2-LOV-82-560A2	ISTC-1200(a)
2-LOV-82-552A2	ISTC-1200(a)
2-LOV-82-518A1	ISTC-1200(a)
2-LOV-82-526A1	ISTC-1200(a)
2-SPV-82-558A2	ISTC-1200skid
2-SPV-82-524A1	ISTC-1200skid

Appendix I - Valves Exempt from the IST Program

Flow Diagram: 2-47W839-1C

VALVE ID	EXEMPTION BASIS	VALVE ID	EXEMPTION BASIS	VALVE ID	EXEMPTION BASIS
2-FCV-82-251	ISTC-1200skid	2-FSV-82-261	ISTC-1200skid	2-LOV-82-516B1	ISTC-1200(a)
2-CKV-82-753B1	ISTC-1200skid	2-FSV-82-260	ISTC-1200skid	2-LOV-82-549B2	ISTC-1200(a)
2-CKV-82-754B1	ISTC-1200skid	2-FSV-82-250	ISTC-1200skid	2-PREG-82-253B	ISTC-1200skid
2-CKV-82-755B2	ISTC-1200skid	2-ISV-82-503B1	ISTA-1100	2-PREG-82-263B	ISTC-1200skid
2-ISIV-82-5070B	ISTC-1200(a)	2-ISV-82-537B2	ISTA-1100	2-PREG-82-252B	ISTC-1200skid
2-ISIV-82-5071B	ISTC-1200(a)	2-ISV-82-508B1	ISTC-1200(c)	2-PREG-82-262B	ISTC-1200skid
2-ISV-82-506B1	ISTA-1100	2-ISV-82-542B2	ISTC-1200(c)	2-RTV-82-415A	ISTC-1200(a)
2-ISV-82-540B2	ISTA-1100	2-ISV-82-544B1	ISTC-1200(c)	2-RTV-82-408A	ISTC-1200(a)
2-CKV-82-756B2	ISTC-1200skid	2-ISV-82-510B1	ISTC-1200(c)	2-RTV-82-409A	ISTC-1200(a)
2-CKV-82-539B2	ISTC-1200skid	2-ISV-82-546B2	ISTA-1100	2-RTV-82-413A	ISTC-1200(a)
2-CKV-82-505B1	ISTC-1200skid	2-ISV-82-512B1	ISTA-1100	2-RTV-82-410A	ISTC-1200(a)
2-CKV-82-536B2	ISTC-1200skid	2-ISV-82-514B1	ISTA-1100	2-RTV-82-411A	ISTC-1200(a)
2-CKV-82-502B1	ISTC-1200skid	2-ISV-82-548B2	ISTA-1100	2-RTV-82-412A	ISTC-1200(a)
2-CKV-82-543B2	ISTC-1200skid	2-ISV-82-517B1	ISTC-1200(c)	2-RTV-82-414A	ISTC-1200(a)
2-CKV-82-509B1	ISTC-1200skid	2-ISV-82-528B1	ISTC-1200(c)	2-PCV-82-252A	ISTC-1200skid
2-CKV-82-531B1	ISTC-1200skid	2-ISV-82-551B2	ISTC-1200(c)	2-PCV-82-262A	ISTC-1200skid
2-CKV-82-565B2	ISTC-1200skid	2-ISV-82-554B2	ISTC-1200(c)	2-PCV-82-253A	ISTC-1200skid
2-CKV-82-557B2	ISTC-1200skid	2-ISV-82-562B2	ISTC-1200(c)	2-PCV-82-263A	ISTC-1200skid
2-CKV-82-523B1	ISTC-1200skid	2-ISV-82-520B1	ISTC-1200(c)	2-LOV-82-518B1	ISTC-1200(a)
2-FCV-82-261	ISTC-1200skid	2-ISV-82-525B1	ISTC-1200(c)	2-LOV-82-560B2	ISTC-1200(a)
2-FCV-82-250	ISTC-1200skid	2-ISV-82-559B2	ISTC-1200(c)	2-LOV-82-526B1	ISTC-1200(a)
2-FCV-82-260	ISTC-1200skid	2-LOV-82-515B1	ISTC-1200(a)	2-LOV-82-552B2	ISTC-1200(a)
2-FSV-82-251	ISTC-1200skid	2-LOV-82-550B2	ISTC-1200(a)	2-SPV-82-524B1	ISTC-1200skid
				2-SPV-82-558B2	ISTC-1200skid

Flow Diagram: 2-47W840-1B

VALVE ID	EXEMPTION BASIS	VALVE ID	EXEMPTION BASIS	VALVE ID	EXEMPTION BASIS
2-CKV-18-556B	ISTC-1200skid	2-CKV-18-558B	ISTC-1200skid	2-CKV-18-559B	ISTC-1200skid
2-CKV-18-557B	ISTC-1200skid	2-CKV-18-563B	ISTC-1200skid	2-RFV-18-560B	ISTC-1200skid
2-DRV-18-598	ISTC - 1200(a)	2-CKV-18-565B	ISTC-1200skid	2-CKV-18-566B	ISTC-1200skid
2-DRV-18-599	ISTC - 1200(a)	2-CKV-18-570B	ISTC-1200skid	2-RFV-18-567B	ISTC-1200skid

Flow Diagram: 2-47W845-3

Appendix I - Valves Exempt from the IST Program

VALVE ID	EXEMPTION BASIS
2-ISV-67-237	ISTC - 1200(a)
2-ISV-67-238	ISTC - 1200(a)
2-RTV-67-848A	ISTC-1200(a)
2-RTV-67-848B	ISTC-1200(a)
2-RTV-67-849A	ISTC-1200(a)
2-RTV-67-849B	ISTC-1200(a)
2-RTV-67-850A	ISTC-1200(a)
2-ISV-67-1005A	ISTA-1100
2-ISV-67-583A	ISTC - 1200(c)
2-BYV-67-589A	ISTC - 1200(c)
2-ISV-67-583C	ISTC - 1200(c)
2-ISV-67-587A	ISTC - 1200(c)
2-ISV-67-587C	ISTC - 1200(c)
2-ISV-67-691A	ISTC - 1200(c)
2-ISV-67-691C	ISTC - 1200(c)
2-DRV-67-767	ISTC-1200(a)
2-DRV-67-768	ISTC-1200(a)
2-DRV-67-769	ISTC-1200(a)
2-DRV-67-770	ISTC-1200(a)
2-BYV-67-589C	ISTC - 1200(c)
2-DRV-67-775	ISTC-1200(a)
2-DRV-67-776	ISTC-1200(a)
2-DRV-67-777	ISTC-1200(a)
2-DRV-67-778	ISTC-1200(a)
2-ISV-67-692A	ISTC - 1200(c)
2-ISV-67-692C	ISTC - 1200(c)
2-ISV-67-1004A	ISTA-1100
2-ISV-67-1004C	ISTA-1100
2-ISV-67-1005C	ISTA-1100
2-RTV-67-840A	ISTC-1200(a)
2-RTV-67-840B	ISTC-1200(a)
2-RTV-67-841A	ISTC-1200(a)
2-RTV-67-841B	ISTC-1200(a)
2-RTV-67-842A	ISTC-1200(a)
2-RTV-67-842B	ISTC-1200(a)

VALVE ID	EXEMPTION BASIS
2-THV-67-564A	ISTC - 1200(c)
2-THV-67-564B	ISTC - 1200(c)
2-THV-67-564C	ISTC - 1200(c)
2-THV-67-564D	ISTC - 1200(c)
2-THV-67-567A	ISTC - 1200(c)
2-THV-67-567B	ISTC - 1200(c)
2-THV-67-567C	ISTC - 1200(c)
2-THV-67-567D	ISTC - 1200(c)
2-THV-67-572A	ISTC - 1200(c)
2-THV-67-572B	ISTC - 1200(c)
2-THV-67-572C	ISTC - 1200(c)
2-THV-67-572D	ISTC - 1200(c)
2-TV-67-690C	ISTC-1200(a)
2-TV-67-915	ISTC-1200(a)
2-TV-67-916	ISTC-1200(a)
2-TV-67-917	ISTC-1200(a)
2-TV-67-918	ISTC-1200(a)
2-TV-67-919A	ISTC-1200(a)
2-THV-67-588A	ISTC - 1200(c)
2-RTV-67-850B	ISTC-1200(a)
2-RTV-67-851A	ISTC-1200(a)
2-RTV-67-851B	ISTC-1200(a)
2-THV-67-588C	ISTC - 1200(c)
2-TV-67-560A	ISTC-1200(a)
2-TV-67-560C	ISTC-1200(a)
2-TV-67-563C	ISTC-1200(a)
2-TV-67-574A	ISTC-1200(a)
2-TV-67-574C	ISTC-1200(a)
2-TV-67-576A	ISTC-1200(a)
2-TV-67-576C	ISTC-1200(a)
2-TV-67-578A	ISTC-1200(a)
2-TV-67-578C	ISTC-1200(a)
2-TV-67-579A	ISTC-1200(a)
2-TV-67-579C	ISTC-1200(a)
2-TV-67-581A	ISTC-1200(a)

VALVE ID	EXEMPTION BASIS
2-TCV-67-129	ISTA-1100
2-TCV-67-132	ISTA-1100
2-TCV-67-137	ISTA-1100
2-ISV-67-232	ISTA-1100
2-TV-67-1210	ISTC-1200(a)
2-TV-67-1211	ISTC-1200(a)
2-TV-67-1212	ISTC-1200(a)
2-TV-67-1213	ISTC-1200(a)
2-VTV-67-695A	ISTC - 1200(a)
2-TV-67-919B	ISTC-1200(a)
2-TV-67-920A	ISTC-1200(a)
2-TV-67-920B	ISTC-1200(a)
2-VTV-67-695C	ISTC - 1200(a)
2-VTV-67-696A	ISTC - 1200(a)
2-VTV-67-696C	ISTC - 1200(a)
2-VTV-67-698A	ISTC - 1200(a)
2-VTV-67-698C	ISTC - 1200(a)
2-VTV-67-699A	ISTC - 1200(a)
2-VTV-67-699C	ISTC - 1200(a)
2-VTV-67-700A	ISTC - 1200(a)
2-TCV-67-94	ISTA-1100
2-TCV-67-85	ISTA-1100
2-TCV-67-93	ISTA-1100
2-TCV-67-92	ISTA-1100
2-TCV-67-84	ISTA-1100
2-CKV-67-565C	ISTA-1100
2-TCV-67-86	ISTA-1100
2-VTV-67-700C	ISTC - 1200(a)
2-VTV-67-693A	ISTC-1200(a)
2-VTV-67-688C	ISTC-1200(a)
2-VTV-67-689A	ISTC-1200(a)
2-VTV-67-693C	ISTC-1200(a)
2-VTV-67-694C	ISTC-1200(a)
2-VTV-67-689C	ISTC-1200(a)
2-VTV-67-694A	ISTC-1200(a)

Appendix I - Valves Exempt from the IST Program

VALVE ID	EXEMPTION BASIS
2-RTV-67-843A	ISTC-1200(a)
2-RTV-67-843B	ISTC-1200(a)
2-RTV-67-844A	ISTC-1200(a)
2-RTV-67-844B	ISTC-1200(a)
2-RTV-67-845A	ISTC-1200(a)
2-RTV-67-845B	ISTC-1200(a)
2-RTV-67-846A	ISTC-1200(a)
2-RTV-67-846B	ISTC-1200(a)
2-RTV-67-847A	ISTC-1200(a)
2-RTV-67-847B	ISTC-1200(a)
2-ISV-67-1005D	ISTA-1100
2-RTV-67-836A	ISTC-1200(a)
2-RTV-67-836B	ISTC-1200(a)
2-RTV-67-837A	ISTC-1200(a)
2-RTV-67-837B	ISTC-1200(a)
2-RTV-67-838A	ISTC-1200(a)
2-RTV-67-838B	ISTC-1200(a)
2-RTV-67-839A	ISTC-1200(a)
2-RTV-67-839B	ISTC-1200(a)
2-ISV-67-1004D	ISTA-1100
2-ISV-67-1004B	ISTA-1100
2-ISV-67-692D	ISTC - 1200(c)
2-ISV-67-692B	ISTC - 1200(c)
2-BYV-67-589D	ISTC - 1200(c)
2-DRV-67-763	ISTC-1200(a)
2-DRV-67-764	ISTC-1200(a)
2-DRV-67-765	ISTC-1200(a)
2-DRV-67-766	ISTC-1200(a)
2-DRV-67-771	ISTC-1200(a)
2-DRV-67-772	ISTC-1200(a)
2-DRV-67-773	ISTC-1200(a)
2-DRV-67-774	ISTC-1200(a)
2-ISV-67-691D	ISTC - 1200(c)
2-ISV-67-691B	ISTC - 1200(c)
2-ISV-67-587D	ISTC - 1200(c)

VALVE ID	EXEMPTION BASIS
2-TV-67-581C	ISTC-1200(a)
2-TV-67-584A	ISTC-1200(a)
2-TV-67-584C	ISTC-1200(a)
2-TV-67-586A	ISTC-1200(a)
2-TV-67-586C	ISTC-1200(a)
2-TV-67-690A	ISTC-1200(a)
2-TV-67-864A	ISTC-1200(a)
2-TV-67-864B	ISTC-1200(a)
2-TV-67-865A	ISTC-1200(a)
2-TV-67-865B	ISTC-1200(a)
2-TV-67-911	ISTC-1200(a)
2-TV-67-912	ISTC-1200(a)
2-TV-67-913	ISTC-1200(a)
2-TV-67-914	ISTC-1200(a)
2-TV-67-690B	ISTC-1200(a)
2-TV-67-586D	ISTC-1200(a)
2-TV-67-586B	ISTC-1200(a)
2-TV-67-584D	ISTC-1200(a)
2-TV-67-584B	ISTC-1200(a)
2-TV-67-581D	ISTC-1200(a)
2-TV-67-581B	ISTC-1200(a)
2-TV-67-579D	ISTC-1200(a)
2-TV-67-579B	ISTC-1200(a)
2-TV-67-578D	ISTC-1200(a)
2-TV-67-578B	ISTC-1200(a)
2-TV-67-576D	ISTC-1200(a)
2-TV-67-576B	ISTC-1200(a)
2-TV-67-574D	ISTC-1200(a)
2-TV-67-574B	ISTC-1200(a)
2-TV-67-563D	ISTC-1200(a)
2-TV-67-560D	ISTC-1200(a)
2-TV-67-563B	ISTC-1200(a)
2-TV-67-560B	ISTC-1200(a)
2-THV-67-588D	ISTC - 1200(c)
2-THV-67-588B	ISTC - 1200(c)

VALVE ID	EXEMPTION BASIS
2-VTV-67-688A	ISTC-1200(a)
2-CKV-67-568A	ISTA-1100
2-TV-67-563A	ISTC-1200(a)
2-CKV-67-571A	ISTA-1100
2-CKV-67-565A	ISTA-1100
2-CKV-67-571C	ISTA-1100
2-CKV-67-568C	ISTA-1100
2-CKV-67-568B	ISTA-1100
2-CKV-67-568D	ISTA-1100
2-CKV-67-565D	ISTA-1100
2-CKV-67-565B	ISTA-1100
2-VTV-67-689D	ISTC-1200(a)
2-VTV-67-694B	ISTC-1200(a)
2-VTV-67-693D	ISTC-1200(a)
2-VTV-67-689B	ISTC-1200(a)
2-VTV-67-694D	ISTC-1200(a)
2-VTV-67-693B	ISTC-1200(a)
2-VTV-67-688D	ISTC-1200(a)
2-VTV-67-688B	ISTC-1200(a)
2-VTV-67-700D	ISTC - 1200(a)
2-TCV-67-101	ISTA-1100
2-TCV-67-108	ISTA-1100
2-TCV-67-100	ISTA-1100
2-CKV-67-571B	ISTA-1100
2-CKV-67-571D	ISTA-1100
2-TCV-67-102	ISTA-1100
2-TCV-67-110	ISTA-1100
2-TCV-67-109	ISTA-1100
2-VTV-67-700B	ISTC - 1200(a)
2-VTV-67-699D	ISTC - 1200(a)
2-VTV-67-699B	ISTC - 1200(a)
2-VTV-67-698D	ISTC - 1200(a)
2-VTV-67-698B	ISTC - 1200(a)
2-VTV-67-696D	ISTC - 1200(a)
2-VTV-67-696B	ISTC - 1200(a)

Appendix I - Valves Exempt from the IST Program

VALVE ID	EXEMPTION BASIS
2-ISV-67-587B	ISTC - 1200(c)
2-ISV-67-583D	ISTC - 1200(c)
2-BYV-67-589B	ISTC - 1200(c)
2-ISV-67-583B	ISTC - 1200(c)
2-ISV-67-1005B	ISTA-1100

VALVE ID	EXEMPTION BASIS
2-TV-67-690D	ISTC-1200(a)
2-TV-67-862A	ISTC-1200(a)
2-TV-67-862B	ISTC-1200(a)
2-TV-67-863A	ISTC-1200(a)
2-TV-67-863B	ISTC-1200(a)

VALVE ID	EXEMPTION BASIS
2-VTV-67-695D	ISTC - 1200(a)
2-TV-67-921A	ISTC-1200(a)
2-TV-67-921B	ISTC-1200(a)
2-TV-67-922A	ISTC-1200(a)
2-TV-67-922B	ISTC-1200(a)
2-VTV-67-695B	ISTC - 1200(a)

Flow Diagram: 2-47W845-7

VALVE ID	EXEMPTION BASIS
2-ISV-67-1015B	ISTA-1100
2-ISV-67-1016B	ISTA-1100
2-DRV-67-1017B	ISTC-1200(a)
2-ISV-67-602A	ISTC - 1200(c)
2-THV-67-601A	ISTC - 1200(c)
2-DRV-67-990	ISTC-1200(a)
2-DRV-67-992	ISTC-1200(a)
2-ISV-67-600A	ISTC - 1200(c)
2-ISV-67-603A	ISTC - 1200(c)
2-ISV-67-607A	ISTC - 1200(c)
2-ISV-67-612A	ISTC - 1200(c)
2-ISV-67-620	ISTC-1200(c)
2-ISV-67-621	ISTC-1200(c)
2-ISV-67-624	ISTC-1200(c)
2-ISV-67-613A	ISTC - 1200(c)
2-ISV-67-648A	ISTC - 1200(c)
2-ISV-67-674A	ISTC - 1200(c)
2-ISV-67-684A	ISTC - 1200(c)
0-BYV-67-682	ISTA-1100
0-FSV-67-1223	ISTC-1200skid
2-ISV-67-684B	ISTC - 1200(c)
2-ISV-67-715B	ISTC - 1200(c)
2-ISV-67-674B	ISTC - 1200(c)
2-ISV-67-680	ISTC-1200(c)
2-ISV-67-648B	ISTC - 1200(c)
2-ISV-67-613B	ISTC - 1200(c)

VALVE ID	EXEMPTION BASIS
2-THV-67-683	ISTC - 1200(c)
2-THV-67-685A	ISTC - 1200(c)
2-THV-67-673A	ISTC - 1200(c)
2-THV-67-604A	ISTC - 1200(c)
2-THV-67-605A	ISTC - 1200(c)
2-THV-67-606A	ISTC - 1200(c)
2-THV-67-608A	ISTC - 1200(c)
2-THV-67-609A	ISTC - 1200(c)
2-THV-67-610A	ISTC - 1200(c)
2-THV-67-611A	ISTC - 1200(c)
2-TV-67-866A	ISTC-1200(a)
2-TV-67-866B	ISTC-1200(a)
2-TV-67-867A	ISTC-1200(a)
2-TV-67-867B	ISTC-1200(a)
2-TV-67-868A	ISTC-1200(a)
2-TV-67-868B	ISTC-1200(a)
2-TV-67-869A	ISTC-1200(a)
2-TV-67-869B	ISTC-1200(a)
2-TV-67-870A	ISTC-1200(a)
2-TV-67-870B	ISTC-1200(a)
2-TV-67-871A	ISTC-1200(a)
2-TV-67-871B	ISTC-1200(a)
2-TV-67-872A	ISTC-1200(a)
2-TV-67-872B	ISTC-1200(a)
2-TV-67-873A	ISTC-1200(a)
2-TV-67-873B	ISTC-1200(a)

VALVE ID	EXEMPTION BASIS
0-PCV-67-1224	ISTC-1200(b)
0-TCV-67-1224A	ISTC-1200(b)
0-TCV-67-1224B	ISTC-1200(b)
2-ISV-67-715A	ISTA-1100
2-VTV-67-989	ISTC - 1200(a)
2-VTV-67-991	ISTC - 1200(a)
2-FCV-67-168	ISTC-1200(c)
2-FCV-67-188	ISTC-1200(c)
2-TV-67-874B	ISTC-1200(a)
2-TV-67-875A	ISTC-1200(a)
2-TV-67-875B	ISTC-1200(a)
2-TV-67-876A	ISTC-1200(a)
2-TV-67-876B	ISTC-1200(a)
2-TV-67-877A	ISTC-1200(a)
2-TV-67-877B	ISTC-1200(a)
2-TV-67-878A	ISTC-1200(a)
2-TV-67-878B	ISTC-1200(a)
2-TV-67-880A	ISTC-1200(a)
2-TV-67-880B	ISTC-1200(a)
2-TV-67-881A	ISTC-1200(a)
2-TV-67-881B	ISTC-1200(a)
2-TV-67-882A	ISTC-1200(a)
2-TV-67-882B	ISTC-1200(a)
2-TV-67-883A	ISTC-1200(a)
2-TV-67-883B	ISTC-1200(a)
2-TV-67-884A	ISTC-1200(a)

Appendix I - Valves Exempt from the IST Program

VALVE ID	EXEMPTION BASIS
2-ISV-67-622	ISTC-1200(c)
2-ISV-67-623	ISTC-1200(c)
2-ISV-67-625	ISTC-1200(c)
2-ISV-67-639	ISTC - 1200(c)
2-ISV-67-641	ISTC - 1200(c)
2-ISV-67-612B	ISTC - 1200(c)
2-ISV-67-607B	ISTC - 1200(c)
2-ISV-67-603B	ISTC - 1200(c)
2-ISV-67-600B	ISTC - 1200(c)
2-ISV-67-602B	ISTC - 1200(c)
2-DRV-67-993	ISTC-1200(a)
2-DRV-67-995	ISTC-1200(a)

VALVE ID	EXEMPTION BASIS
2-TV-67-874A	ISTC-1200(a)
2-THV-67-611B	ISTC - 1200(c)
2-THV-67-640	ISTC - 1200(c)
2-THV-67-610B	ISTC - 1200(c)
2-THV-67-609B	ISTC - 1200(c)
2-THV-67-608B	ISTC - 1200(c)
2-THV-67-606B	ISTC - 1200(c)
2-THV-67-605B	ISTC - 1200(c)
2-THV-67-604B	ISTC - 1200(c)
2-THV-67-601B	ISTC - 1200(c)
2-THV-67-673B	ISTC - 1200(c)
2-THV-67-685B	ISTC - 1200(c)

VALVE ID	EXEMPTION BASIS
2-TV-67-884B	ISTC-1200(a)
2-TV-67-885A	ISTC-1200(a)
2-TV-67-885B	ISTC-1200(a)
2-TV-67-886A	ISTC-1200(a)
2-TV-67-886B	ISTC-1200(a)
2-TV-67-888A	ISTC-1200(a)
2-TV-67-888B	ISTC-1200(a)
0-ISV-67-681B	ISTC-1200(c)
2-FCV-67-190	ISTC-1200(c)
2-FCV-67-170	ISTC-1200(c)
2-VTV-67-994	ISTC - 1200(a)
2-FCV-67-172	ISTA-1100
0-ISV-67-681A	ISTC-1200(c)

Flow Diagram: 2-47W850-9

VALVE ID	EXEMPTION BASIS
2-TV-26-1258	ISTC - 1200(a)
2-TV-26-1293	ISTC - 1200(a)

VALVE ID	EXEMPTION BASIS
2-FCV-26-242	ISTA-1100
2-FCV-26-241	ISTA-1100

VALVE ID	EXEMPTION BASIS
2-FCV-26-245	ISTA-1100
2-FCV-26-244	ISTA-1100

Flow Diagram: 2-47W851-1

VALVE ID	EXEMPTION BASIS
2-TV-77-904	ISTC - 1200(a)

Flow Diagram: 2-47W859-3

VALVE ID	EXEMPTION BASIS
2-RTV-70-292A	ISTC - 1200(a)
2-RTV-70-293A	ISTC - 1200(a)
2-RTV-70-294A	ISTA-1100
2-RTV-70-295A	ISTA-1100
2-RTV-70-296A	ISTA-1100
2-RTV-70-297A	ISTA-1100
2-RTV-70-298A	ISTA-1100
2-RTV-70-299A	ISTA-1100
2-RTV-70-300A	ISTA-1100
2-RTV-70-301A	ISTA-1100
2-RTV-70-302A	ISTA-1100

VALVE ID	EXEMPTION BASIS
2-RTV-70-309A	ISTA-1100
2-RTV-70-310A	ISTA-1100
2-RTV-70-311A	ISTA-1100
2-RTV-70-312A	ISTA-1100
2-RTV-70-313A	ISTA-1100
2-RTV-70-314A	ISTA-1100
2-RTV-70-315A	ISTA-1100
2-RTV-70-316A	ISTA-1100
2-RTV-70-317A	ISTA-1100
2-RTV-70-318A	ISTA-1100
2-RTV-70-319A	ISTA-1100

VALVE ID	EXEMPTION BASIS
2-TCV-70-192	ISTA-1100
2-ISV-70-574	ISTA-1100
2-VTV-70-575	ISTC - 1200(a)
2-THV-70-577	ISTA-1100
2-VTV-70-582A	ISTC - 1200(a)
2-VTV-70-583	ISTC - 1200(a)
2-THV-70-593	ISTC - 1200(c)
2-VTV-70-594	ISTC - 1200(a)
2-ISV-70-600	ISTC-1200(c)
2-ISV-70-661	ISTC-1200(c)
2-ISV-70-662	ISTA-1100

Appendix I - Valves Exempt from the IST Program

VALVE ID	EXEMPTION BASIS
2-RTV-70-303A	ISTA-1100
2-RTV-70-304A	ISTA-1100
2-RTV-70-305A	ISTA-1100
2-RTV-70-306A	ISTA-1100
2-RTV-70-307A	ISTA-1100
2-RTV-70-308A	ISTA-1100
2-ISV-70-573	ISTC - 1200(c)
2-DRV-70-576	ISTC-1200(a)
2-DRV-70-579	ISTC-1200(a)
2-DRV-70-580	ISTC-1200(a)
2-ISV-70-581	ISTC - 1200(c)
2-DRV-70-582B	ISTC-1200(a)
2-ISV-70-585	ISTC - 1200(c)
2-ISV-70-587	ISTC - 1200(c)
2-ISV-70-588	ISTC - 1200(c)
2-ISV-70-637	ISTC - 1200(c)
2-ISV-70-670	ISTC - 1200(c)
2-ISV-70-673A	ISTC - 1200(c)
2-ISV-70-673B	ISTC - 1200(c)
2-ISV-70-677A	ISTC - 1200(c)
2-ISV-70-677B	ISTC - 1200(c)
2-ISV-70-680	ISTC - 1200(c)
2-DRV-70-689	ISTC-1200(a)
2-DRV-70-699	ISTC-1200(a)
2-ISV-70-700	ISTC - 1200(c)
2-DRV-70-701	ISTC-1200(a)
2-DRV-70-704	ISTC-1200(a)
2-ISV-70-705	ISTC - 1200(c)
2-DRV-70-733	ISTC-1200(a)
2-ISV-70-736	ISTC - 1200(c)
2-ISV-70-742	ISTA-1100
2-ISV-70-745	ISTC - 1200(c)
2-DRV-70-760	ISTC-1200(a)
2-DRV-70-761	ISTC-1200(a)
2-DRV-70-762	ISTC-1200(a)

VALVE ID	EXEMPTION BASIS
2-RTV-70-320A	ISTA-1100
2-RTV-70-321A	ISTA-1100
2-RTV-70-322A	ISTA-1100
2-RTV-70-323A	ISTA-1100
2-RTV-70-324A	ISTA-1100
2-RTV-70-325A	ISTA-1100
2-RTV-70-326A	ISTA-1100
2-RTV-70-327A	ISTA-1100
2-RTV-70-328A	ISTA-1100
2-RTV-70-329A	ISTA-1100
2-RTV-70-330A	ISTA-1100
2-RTV-70-331A	ISTA-1100
2-RTV-70-334A	ISTA-1100
2-RTV-70-335A	ISTA-1100
2-RTV-70-336A	ISTA-1100
2-RTV-70-337A	ISTA-1100
2-RTV-70-338A	ISTC - 1200(a)
2-RTV-70-339A	ISTC - 1200(a)
2-RTV-70-373A	ISTA-1100
2-RTV-70-374A	ISTA-1100
2-RTV-70-375A	ISTA-1100
2-RTV-70-376A	ISTA-1100
2-RTV-70-387A	ISTC - 1200(a)
2-RTV-70-388A	ISTC - 1200(a)
2-RTV-70-389A	ISTC - 1200(a)
2-RTV-70-390A	ISTC - 1200(a)
2-THV-70-586	ISTC - 1200(c)
2-THV-70-684A	ISTC - 1200(c)
2-THV-70-684B	ISTC - 1200(c)
2-THV-70-684C	ISTC - 1200(c)
2-THV-70-684D	ISTC - 1200(c)
2-THV-70-695A	ISTC - 1200(c)
2-THV-70-695B	ISTC - 1200(c)
2-THV-70-695C	ISTC - 1200(c)
2-THV-70-695D	ISTC - 1200(c)

VALVE ID	EXEMPTION BASIS
2-ISV-70-669	ISTA-1100
2-CKV-70-671	ISTA-1100
2-CKV-70-676A	ISTA-1100
2-CKV-70-676B	ISTA-1100
2-TV-70-678A	ISTC - 1200(a)
2-TV-70-678B	ISTC-1200(a)
2-TV-70-678C	ISTC - 1200(a)
2-VTV-70-678D	ISTC - 1200(a)
2-VTV-70-678E	ISTC - 1200(a)
2-VTV-70-685A	ISTC - 1200(a)
2-VTV-70-685B	ISTC - 1200(a)
2-TV-70-686A	ISTC - 1200(a)
2-TV-70-686B	ISTC - 1200(a)
2-ISV-70-688	ISTA-1100
2-ISV-70-690	ISTA-1100
2-TV-70-691A	ISTC - 1200(a)
2-TV-70-691C	ISTC - 1200(a)
2-VTV-70-691D	ISTC - 1200(a)
2-VTV-70-691E	ISTC - 1200(a)
2-ISV-70-693	ISTA-1100
2-VTV-70-697A	ISTC - 1200(a)
2-VTV-70-697B	ISTC - 1200(a)
2-TV-70-697C	ISTC - 1200(a)
2-TV-70-697D	ISTC - 1200(a)
2-THV-70-702	ISTA-1100
2-TV-70-702A	ISTC - 1200(a)
2-TV-70-702B	ISTC - 1200(a)
2-TV-70-702C	ISTC - 1200(a)
2-TV-70-702D	ISTC - 1200(a)
2-VTV-70-702E	ISTC - 1200(a)
2-VTV-70-702F	ISTC - 1200(a)
2-VTV-70-706	ISTC - 1200(a)
2-TV-70-722A	ISTC - 1200(a)
2-TV-70-722B	ISTC-1200(a)
2-ISV-70-734	ISTA-1100

Appendix I - Valves Exempt from the IST Program

VALVE ID	EXEMPTION BASIS
2-DRV-70-763	ISTC-1200(a)
2-ISV-70-766	ISTA-1100
2-DRV-70-767	ISTC - 1200(a)
2-DRV-70-769	ISTC - 1200(a)
2-ISV-70-770	ISTA-1100
2-DRV-70-771	ISTC - 1200(a)
2-ISV-70-773	ISTC - 1200(c)
2-DRV-70-791	ISTC-1200(a)

VALVE ID	EXEMPTION BASIS
2-THV-70-696A	ISTC - 1200(c)
2-THV-70-696B	ISTC - 1200(c)
2-THV-70-696C	ISTC - 1200(c)
2-THV-70-696D	ISTC - 1200(c)
2-THV-70-743A	ISTC - 1200(c)
2-THV-70-743B	ISTC - 1200(c)
2-VTV-70-774	ISTC - 1200(a)
2-RTV-70-332A	ISTA-1100
2-RTV-70-333A	ISTA-1100

VALVE ID	EXEMPTION BASIS
2-TV-70-735	ISTC - 1200(a)
2-TV-70-737	ISTC-1200(a)
2-VTV-70-738	ISTC - 1200(a)
2-VTV-70-744	ISTC - 1200(a)
2-RFV-70-746	ISTA-1100
2-VTV-70-759	ISTC - 1200(a)
2-VTV-70-768	ISTC - 1200(a)
2-ISV-70-789	ISTA-1100
2-FCV-70-195	ISTC-1200(c)

Flow Diagram: 2-47W880-3

VALVE ID	EXEMPTION BASIS
2-ISV-82-700A2	ISTC-1200(c)
2-ISV-82-700A1	ISTC-1200(c)
2-CKV-82-705A1	ISTC-1200skid
2-CKV-82-705A2	ISTC-1200skid

VALVE ID	EXEMPTION BASIS
2-CKV-82-704A1	ISTC-1200skid
2-CKV-82-704A2	ISTC-1200skid
2-CKV-82-703A1	ISTC-1200skid
2-CKV-82-703A2	ISTC-1200skid
2-CKV-82-702A1	ISTC-1200skid

VALVE ID	EXEMPTION BASIS
2-CKV-82-702A2	ISTC-1200skid
2-CKV-82-708A1	ISTC-1200skid
2-CKV-82-708A2	ISTC-1200skid
2-RFV-82-A1	ISTC-1200skid
2-RFV-82-A2	ISTC-1200skid

Flow Diagram: 2-47W880-4

VALVE ID	EXEMPTION BASIS
2-ISV-82-700B2	ISTC-1200(c)
2-ISV-82-700B1	ISTC-1200(c)
2-CKV-82-705B1	ISTC-1200skid
2-CKV-82-705B2	ISTC-1200skid

VALVE ID	EXEMPTION BASIS
2-CKV-82-704B1	ISTC-1200skid
2-CKV-82-704B2	ISTC-1200skid
2-CKV-82-702B1	ISTC-1200skid
2-CKV-82-702B2	ISTC-1200skid
2-CKV-82-703B1	ISTC-1200skid

VALVE ID	EXEMPTION BASIS
2-CKV-82-703B2	ISTC-1200skid
2-CKV-82-708B1	ISTC-1200skid
2-CKV-82-708B2	ISTC-1200skid
2-RFV-82-B1	ISTC-1200skid
2-RFV-82-B2	ISTC-1200skid

Flow Diagram: 2-47W881-3

VALVE ID	EXEMPTION BASIS
2-RTV-82-722A1A	ISTC-1200(a)
2-RTV-82-722A2B	ISTC-1200(a)

VALVE ID	EXEMPTION BASIS
2-RTV-82-722A1B	ISTC-1200(a)
2-RTV-82-722A2A	ISTC-1200(a)
2-TCV-82-721A2	ISTC-1200skid

VALVE ID	EXEMPTION BASIS
2-TCV-82-721A1	ISTC-1200skid
2-DRV-82-A1	ISTC-1200(a)
2-DRV-82-A2	ISTC-1200(a)

Appendix I - Valves Exempt from the IST Program

Flow Diagram: 2-47W881-4

VALVE ID	EXEMPTION BASIS	VALVE ID	EXEMPTION BASIS	VALVE ID	EXEMPTION BASIS
2-RTV-82-722AB1B	ISTC-1200(a)	2-RTV-82-722AB1A	ISTC-1200(a)	2-TCV-82-721B1	ISTC-1200skid
2-RTV-82-722AB2A	ISTC-1200(a)	2-RTV-82-722AB2B	ISTC-1200(a)	2-DRV-82-B1	ISTC-1200(a)
		2-TCV-82-721B2	ISTC-1200skid	2-DRV-82-B2	ISTC-1200(a)

Flow Diagram: 47W600-102

VALVE ID	EXEMPTION BASIS	VALVE ID	EXEMPTION BASIS	VALVE ID	EXEMPTION BASIS
0-ISIV-90-133A	ISTA-1100	0-ISIV-90-123D	ISTA-1100	1-ISIV-90-123D/A	ISTA-1100
0-ISIV-90-133G	ISTA-1100	0-ISIV-90-123E	ISTA-1100	2-ISIV-90-123D/A	ISTA-1100
0-ISIV-90-134A	ISTA-1100	0-ISIV-90-134G	ISTA-1100	1-ISIV-90-123E/A	ISTA-1100
				2-ISIV-90-123E/A	ISTA-1100

Flow Diagram: 47W600-103

VALVE ID	EXEMPTION BASIS	VALVE ID	EXEMPTION BASIS	VALVE ID	EXEMPTION BASIS
0-ISIV-90-125E	ISTA-1100	0-TTIV-90-125B1	ISTA-1100	1-TTIV-90-130B1	ISTA-1100
0-ISIV-90-126E	ISTA-1100	0-TTIV-90-126B1	ISTA-1100	1-TTIV-90-131B1	ISTA-1100
0-ISIV-90-205E	ISTA-1100	0-ISIV-90-205A	ISTA-1100	0-TTIV-90-205B1	ISTA-1100
0-ISIV-90-206E	ISTA-1100	0-ISIV-90-206A	ISTA-1100	0-TTIV-90-206B1	ISTA-1100

Flow Diagram: 47W600-104

VALVE ID	EXEMPTION BASIS	VALVE ID	EXEMPTION BASIS	VALVE ID	EXEMPTION BASIS
0-ISIV-90-101B	ISTA-1100	0-ISIV-90-101G	ISTA-1100	1-ISIV-90-402D	ISTA-1100
0-ISIV-90-101E	ISTA-1100	1-DRIV-90-402E	ISTA-1100	2-DRIV-90-402E	ISTA-1100
0-ISIV-90-101F	ISTA-1100	1-DRIV-90-402F	ISTA-1100	2-DRIV-90-402F	ISTA-1100

Flow Diagram: 47W600-105

VALVE ID	EXEMPTION BASIS	VALVE ID	EXEMPTION BASIS	VALVE ID	EXEMPTION BASIS
1-TTIV-90-106D1	ISTA-1100	1-TTIV-90-112D1	ISTA-1100	1-TTIV-90-106B1	ISTA-1100
				1-TTIV-90-112B1	ISTA-1100

Appendix I - Valves Exempt from the IST Program

Flow Diagram: 47W600-113

VALVE ID	EXEMPTION BASIS
2-ISIV-67-825A/BH	ISTC-1200(a)
2-ISIV-67-825B/BL	ISTC-1200(a)
2-ISIV-67-826A/BH	ISTC-1200(a)
2-ISIV-67-826B/BL	ISTC-1200(a)
2-ISIV-67-827A/BL	ISTC-1200(a)

VALVE ID	EXEMPTION BASIS
1-ISIV-67-825A/BH	ISTC-1200(a)
1-ISIV-67-825B/BL	ISTC-1200(a)
2-ISIV-67-827B/BH	ISTC-1200(a)
2-ISIV-67-828A/BL	ISTC-1200(a)
2-ISIV-67-828B/BH	ISTC-1200(a)

VALVE ID	EXEMPTION BASIS
1-ISIV-67-826A/BH	ISTC-1200(a)
1-ISIV-67-826B/BL	ISTC-1200(a)
1-ISIV-67-827A/BL	ISTC-1200(a)
1-ISIV-67-827B/BH	ISTC-1200(a)
1-ISIV-67-828A/BL	ISTC-1200(a)
1-ISIV-67-828B/BH	ISTC-1200(a)

Flow Diagram: 47W600-114

VALVE ID	EXEMPTION BASIS
1-VTIV-62-335B	ISTC-1200(a)
1-VTIV-62-336B	ISTC-1200(a)
1-VTIV-62-337B	ISTC-1200(a)
1-ISIV-67-832A/BH	ISTC-1200(a)
2-VTIV-67-833A/FH	ISTC-1200(a)
2-VTIV-67-833B/FL	ISTC-1200(a)

VALVE ID	EXEMPTION BASIS
1-ISIV-62-335C	ISTC-1200(a)
1-ISIV-62-336C	ISTC-1200(a)
1-ISIV-62-337C	ISTC-1200(a)
0-VTIV-62-370D	ISTA-1100
1-ISIV-67-832B/BL	ISTC-1200(a)
1-ISIV-67-833A/BH	ISTC-1200(a)
1-ISIV-67-833B/BL	ISTC-1200(a)

VALVE ID	EXEMPTION BASIS
0-ISIV-62-370B	ISTA-1100
1-ISIV-62-372B	ISTA-1100
2-ISIV-62-372B	ISTA-1100
1-VTIV-62-372D	ISTA-1100
2-VTIV-62-372D	ISTA-1100
0-ISIV-62-374B	ISTA-1100
0-VTIV-62-374D	ISTA-1100

Flow Diagram: 47W600-115

VALVE ID	EXEMPTION BASIS
1-ISIV-62-333C	ISTC-1200(a)

VALVE ID	EXEMPTION BASIS
1-ISIV-62-334C	ISTC-1200(a)
1-ISIV-62-356B	ISTC-1200(a)

VALVE ID	EXEMPTION BASIS
1-VTIV-62-333B	ISTC-1200(a)
1-VTIV-62-334B	ISTC-1200(a)

Flow Diagram: 47W600-116

VALVE ID	EXEMPTION BASIS
0-ISIV-32-255B	ISTC - 1200(a)
0-ISIV-32-267B	ISTC - 1200(a)
1-VTIV-70-355B	ISTC-1200(a)
2-VTIV-70-355B	ISTC-1200(a)
1-VTIV-70-357B	ISTC-1200(a)
2-VTIV-70-357B	ISTC-1200(a)
1-ISIV-70-357C/1	ISTC-1200(a)

VALVE ID	EXEMPTION BASIS
1-ISIV-70-356B/1	ISTC-1200(a)
2-ISIV-70-356B/1	ISTC-1200(a)
1-ISIV-70-356B/2	ISTC-1200(a)
2-ISIV-70-356B/2	ISTC-1200(a)
2-ISIV-70-357C/1	ISTC-1200(a)
1-ISIV-70-357C/2	ISTC-1200(a)
2-ISIV-70-357C/2	ISTC-1200(a)

VALVE ID	EXEMPTION BASIS
1-ISIV-70-354B/1	ISTC-1200(a)
2-ISIV-70-354B/1	ISTC-1200(a)
1-ISIV-70-354B/2	ISTC-1200(a)
2-ISIV-70-354B/2	ISTC-1200(a)
1-ISIV-70-355C/1	ISTC-1200(a)
2-ISIV-70-355C/1	ISTC-1200(a)
1-ISIV-70-355C/2	ISTC-1200(a)
2-ISIV-70-355C/2	ISTC-1200(a)

Appendix I - Valves Exempt from the IST Program

Flow Diagram: 47W600-117

VALVE ID	EXEMPTION BASIS	VALVE ID	EXEMPTION BASIS	VALVE ID	EXEMPTION BASIS
1-VTIV-62-354B	ISTC-1200(a)	1-ISIV-62-96A	ISTC-1200(a)	1-ISIV-62-97AB	ISTC-1200(a)
1-VTIV-62-355B	ISTC-1200(a)	1-ISIV-62-96AB	ISTC-1200(a)	1-ISIV-62-354C	ISTC-1200(a)
		1-ISIV-62-97A	ISTC-1200(a)	1-ISIV-62-355C	ISTC-1200(a)

Flow Diagram: 47W600-118

VALVE ID	EXEMPTION BASIS	VALVE ID	EXEMPTION BASIS	VALVE ID	EXEMPTION BASIS
1-VTIV-62-341B	ISTC-1200(a)	1-VTIV-62-344B	ISTC-1200(a)	1-ISIV-62-341C/1	ISTC-1200(a)
1-VTIV-62-350B	ISTC-1200(a)	1-VTIV-62-349B	ISTC-1200(a)	1-ISIV-62-341C/2	ISTC-1200(a)
1-VTIV-62-351B	ISTC-1200(a)	1-ISIV-62-350C	ISTC-1200(a)	1-ISIV-62-351C/1	ISTC-1200(a)
				1-ISIV-62-351C/2	ISTC-1200(a)

Flow Diagram: 47W600-121

VALVE ID	EXEMPTION BASIS	VALVE ID	EXEMPTION BASIS	VALVE ID	EXEMPTION BASIS
0-ISIV-67-984C/H	ISTC-1200(a)	0-ISIV-67-985C/1L	ISTC-1200(a)	0-ISIV-67-987C/1L	ISTC-1200(a)
0-ISIV-67-985C/2	ISTC-1200(a)	0-ISIV-67-987C/2	ISTC-1200(a)	0-ISIV-67-988C/H	ISTC-1200(a)

Flow Diagram: 47W600-124

VALVE ID	EXEMPTION BASIS	VALVE ID	EXEMPTION BASIS	VALVE ID	EXEMPTION BASIS
1-ISIV-63-346B	ISTC-1200(a)	1-ISIV-63-348B	ISTC-1200(a)	1-ISIV-63-345B	ISTC-1200(a)
				1-ISIV-63-347B	ISTC-1200(a)

Flow Diagram: 47W600-127

VALVE ID	EXEMPTION BASIS	VALVE ID	EXEMPTION BASIS	VALVE ID	EXEMPTION BASIS
0-VTIV-26-318D	ISTA-1100	0-VTIV-26-317B1	ISTA-1100	0-ISIV-26-317B	ISTA-1100
				0-ISIV-26-318B	ISTA-1100

Flow Diagram: 47W600-129

VALVE ID	EXEMPTION BASIS	VALVE ID	EXEMPTION BASIS	VALVE ID	EXEMPTION BASIS
0-DRIV-26-315D	ISTA-1100	0-VTIV-26-315E	ISTA-1100	0-ISIV-26-315B	ISTA-1100
0-DRIV-26-316D	ISTA-1100	1-ISIV-3-322C/3	ISTC - 1200(a)	0-ISIV-26-316B	ISTA-1100
1-VTIV-3-363B	ISTC - 1200(a)	1-ISIV-3-363C	ISTC - 1200(a)	0-VTIV-26-316E	ISTA-1100

Flow Diagram: 47W600-130

VALVE ID	EXEMPTION BASIS	VALVE ID	EXEMPTION BASIS
0-ISIV-32-258B	ISTC - 1200(a)	0-ISIV-32-263B	ISTC - 1200(a)

Appendix I - Valves Exempt from the IST Program

Flow Diagram: 47W600-131

VALVE ID	EXEMPTION BASIS	VALVE ID	EXEMPTION BASIS	VALVE ID	EXEMPTION BASIS
1-ISIV-70-310B	ISTC-1200(a)	1-VTIV-72-205B/2	ISTC-1200(a)	1-ISIV-72-212B/1	ISTC-1200(a)
1-VTIV-70-310D	ISTC-1200(a)	1-ISIV-72-205C/2	ISTC-1200(a)	1-VTIV-72-213B	ISTC-1200(a)
1-ISIV-70-311B	ISTC-1200(a)	1-VTIV-72-206B	ISTC-1200(a)	1-ISIV-72-213C/1	ISTC-1200(a)
1-VTIV-70-311D	ISTC-1200(a)	1-ISIV-72-206C/1	ISTC-1200(a)	1-ISIV-72-213C/2	ISTC-1200(a)
1-ISIV-70-312B	ISTC-1200(a)	1-VTIV-72-207B	ISTC-1200(a)	1-VTIV-72-214B	ISTC-1200(a)
1-VTIV-70-312D	ISTC-1200(a)	1-VTIV-72-212D/1	ISTC-1200(a)	1-ISIV-72-214C	ISTC-1200(a)
1-ISIV-70-313B	ISTC-1200(a)	1-ISIV-70-280B/L	ISTC-1200(a)	1-ISIV-70-267B/H	ISTC-1200(a)
1-VTIV-70-313D	ISTC-1200(a)	1-ISIV-70-281B/H	ISTC-1200(a)	1-ISIV-70-268B/L	ISTC-1200(a)

Flow Diagram: 47W600-132

VALVE ID	EXEMPTION BASIS	VALVE ID	EXEMPTION BASIS	VALVE ID	EXEMPTION BASIS
1-VTIV-72-203B	ISTC-1200(a)	1-ISIV-72-201B	ISTC-1200(a)	1-ISIV-72-208C	ISTC-1200(a)
1-ISIV-72-203C	ISTC-1200(a)	1-ISIV-72-202B	ISTC-1200(a)	1-ISIV-72-209C	ISTC-1200(a)
1-VTIV-72-204B	ISTC-1200(a)	1-ISIV-72-211C	ISTC-1200(a)	1-ISIV-70-314B	ISTC-1200(a)
1-ISIV-72-204C	ISTC-1200(a)	1-ISIV-63-339B/2H	ISTC-1200(a)	1-ISIV-70-314B1	ISTC-1200(a)
1-VTIV-72-210B	ISTC-1200(a)	1-ISIV-63-339B/3H	ISTC-1200(a)	1-ISIV-70-315B	ISTC-1200(a)
1-ISIV-72-210C	ISTC-1200(a)	1-ISIV-63-340B/2L	ISTC-1200(a)	1-ISIV-70-315B1	ISTC-1200(a)
1-VTIV-72-211B	ISTC-1200(a)	1-ISIV-63-340B/3L	ISTC-1200(a)	1-ISIV-70-375B	ISTC-1200(a)
				1-ISIV-70-376B	ISTC-1200(a)

Appendix I - Valves Exempt from the IST Program

Flow Diagram: 47W600-133

VALVE ID	EXEMPTION BASIS	VALVE ID	EXEMPTION BASIS	VALVE ID	EXEMPTION BASIS
1-VTIV-67-901B	ISTC-1200(a)	1-ISIV-67-905C/1	ISTC-1200(a)	1-ISIV-67-901C	ISTC-1200(a)
2-VTIV-67-901B	ISTC-1200(a)	2-ISIV-67-905C/1	ISTC-1200(a)	2-ISIV-67-901C	ISTC-1200(a)
1-VTIV-67-902B	ISTC-1200(a)	1-ISIV-67-905C/2	ISTC-1200(a)	1-ISIV-67-901C1	ISTC-1200(a)
2-VTIV-67-902B	ISTC-1200(a)	2-ISIV-67-905C/2	ISTC-1200(a)	2-ISIV-67-901C1	ISTC-1200(a)
1-VTIV-67-905B	ISTC-1200(a)	1-ISIV-67-906C/1	ISTC-1200(a)	1-ISIV-67-901C2	ISTC-1200(a)
2-VTIV-67-905B	ISTC-1200(a)	2-ISIV-67-906C/1	ISTC-1200(a)	2-ISIV-67-901C2	ISTC-1200(a)
1-VTIV-67-906B	ISTC-1200(a)	1-ISIV-67-906C/2	ISTC-1200(a)	1-ISIV-67-901C3	ISTC-1200(a)
2-VTIV-67-906B	ISTC-1200(a)	2-ISIV-67-906C/2	ISTC-1200(a)	2-ISIV-67-901C3	ISTC-1200(a)
1-VTIV-67-925B	ISTC-1200(a)	1-ISIV-67-906C/3	ISTC-1200(a)	1-ISIV-67-902C	ISTC-1200(a)
2-VTIV-67-925B	ISTC-1200(a)	2-ISIV-67-906C/3	ISTC-1200(a)	2-ISIV-67-902C	ISTC-1200(a)
1-VTIV-67-926B	ISTC-1200(a)	1-ISIV-67-906C/4	ISTC-1200(a)	1-ISIV-67-902C1	ISTC-1200(a)
2-VTIV-67-926B	ISTC-1200(a)	2-ISIV-67-906C/4	ISTC-1200(a)	2-ISIV-67-902C1	ISTC-1200(a)
1-VTIV-67-943B	ISTC-1200(a)	1-ISIV-67-943B/L	ISTC-1200(a)	1-ISIV-67-925C	ISTC-1200(a)
2-VTIV-67-943B	ISTC-1200(a)	2-ISIV-67-943C	ISTC-1200(a)	2-ISIV-67-925C	ISTC-1200(a)
1-VTIV-67-944B	ISTC-1200(a)	1-ISIV-67-944C	ISTC-1200(a)	1-ISIV-67-926C	ISTC-1200(a)
2-VTIV-67-944B	ISTC - 1200(a)	2-ISIV-67-944C	ISTC-1200(a)	2-ISIV-67-926C	ISTC-1200(a)

Flow Diagram: 47W600-134

VALVE ID	EXEMPTION BASIS	VALVE ID	EXEMPTION BASIS	VALVE ID	EXEMPTION BASIS
1-ISIV-70-336B/H	ISTC-1200(a)	1-ISIV-70-269B/H	ISTC-1200(a)	1-ISIV-70-283B/H	ISTC-1200(a)
1-ISIV-70-337B/L	ISTC-1200(a)	1-ISIV-70-270B/L	ISTC-1200(a)	1-ISIV-70-292B/H	ISTC-1200(a)
1-ISIV-70-338B/H	ISTC-1200(a)	1-ISIV-70-282B/L	ISTC-1200(a)	1-ISIV-70-293B/L	ISTC-1200(a)
1-ISIV-70-339B/L	ISTC-1200(a)	1-ISIV-70-336B1/H	ISTC-1200(a)	1-ISIV-70-334B/L	ISTC-1200(a)
		1-ISIV-70-337B1/L	ISTC-1200(a)	1-ISIV-70-335B/H	ISTC-1200(a)

Flow Diagram: 47W600-135

VALVE ID	EXEMPTION BASIS	VALVE ID	EXEMPTION BASIS	VALVE ID	EXEMPTION BASIS
1-RTV-70-215AAAH	ISTA-1100	1-ISIV-70-215A/BH	ISTA-1100	1-ISIV-70-215A/BL	ISTA-1100
1-RTV-70-215AAAL	ISTA-1100	1-RTV-70-215ABAH	ISTA-1100	1-ISIV-70-215B/CH	ISTA-1100
		1-RTV-70-215ABAL	ISTA-1100	1-ISIV-70-215B/CL	ISTA-1100

Appendix I - Valves Exempt from the IST Program

Flow Diagram: 47W600-136

VALVE ID	EXEMPTION BASIS	VALVE ID	EXEMPTION BASIS	VALVE ID	EXEMPTION BASIS
1-ISIV-70-258B	ISTC-1200(a)	1-ISIV-70-259B/2H	ISTC-1200(a)	1-ISIV-70-259B/1H	ISTC-1200(a)
1-ISIV-70-260C/2	ISTC-1200(a)	1-ISIV-70-260B/2L	ISTC-1200(a)	2-ISIV-70-259B/1H	ISTC-1200(a)
1-ISIV-70-271B	ISTC-1200(a)	2-ISIV-70-260B/2L	ISTC-1200(a)	2-ISIV-70-259B/2H	ISTC-1200(a)
1-ISIV-70-272C/1	ISTC-1200(a)	1-ISIV-70-272C/2	ISTC-1200(a)	1-ISIV-70-260B/1L	ISTC-1200(a)
1-ISIV-70-273C/1	ISTC-1200(a)	1-ISIV-70-273C/2	ISTC-1200(a)	2-ISIV-70-260B/1L	ISTC-1200(a)

Flow Diagram: 47W600-137

VALVE ID	EXEMPTION BASIS	VALVE ID	EXEMPTION BASIS	VALVE ID	EXEMPTION BASIS
1-ISIV-70-284B	ISTC-1200(a)	1-ISIV-70-285B/2H	ISTC-1200(a)	1-ISIV-70-287B/H	ISTC-1200(a)
1-ISIV-70-285B/1H	ISTC-1200(a)	1-ISIV-70-286B/2L	ISTC-1200(a)	2-ISIV-70-287B/H	ISTC-1200(a)
1-ISIV-70-286B/1L	ISTC-1200(a)	0-VTIV-70-358F	ISTC-1200(a)	2-ISIV-70-288B/L	ISTC-1200(a)
1-ISIV-70-289B	ISTC-1200(a)	0-ISIV-70-360B/H	ISTC-1200(a)	1-ISIV-70-288B/L	ISTC-1200(a)
1-ISIV-70-290B/H	ISTC-1200(a)	0-VTIV-70-360F	ISTC-1200(a)	0-ISIV-70-358B/H	ISTC-1200(a)
1-ISIV-70-291B/L	ISTC-1200(a)	0-ISIV-70-361B/L	ISTC-1200(a)	0-ISIV-70-359B/L	ISTC-1200(a)

Flow Diagram: 47W600-142

VALVE ID	EXEMPTION BASIS	VALVE ID	EXEMPTION BASIS	VALVE ID	EXEMPTION BASIS
1-ISIV-63-351B	ISTC-1200(a)	1-ISIV-63-378C/1	ISTC-1200(a)	1-ISIV-63-355B	ISTC-1200(a)
1-ISIV-63-352B	ISTC-1200(a)	1-VTIV-63-379B	ISTC-1200(a)	1-ISIV-63-356B	ISTC-1200(a)
1-VTIV-63-377B	ISTC-1200(a)	1-ISIV-63-379C	ISTC-1200(a)	1-ISIV-63-357B	ISTC-1200(a)
1-ISIV-63-377C	ISTC-1200(a)	1-ISIV-63-380C/1	ISTC-1200(a)	1-ISIV-63-358B	ISTC-1200(a)
1-ISIV-63-378C/2	ISTC-1200(a)	1-ISIV-63-380C/2	ISTC-1200(a)	1-VTIV-63-378B	ISTC-1200(a)
				1-VTIV-63-380B	ISTC-1200(a)

Appendix I - Valves Exempt from the IST Program

Flow Diagram: 47W600-144

VALVE ID	EXEMPTION BASIS	VALVE ID	EXEMPTION BASIS	VALVE ID	EXEMPTION BASIS
1-VTIV-67-800A/BL	ISTC-1200(a)	2-ISIV-67-800AC1L	ISTC-1200(a)	0-ISIV-70-369B	ISTC-1200(a)
2-VTIV-67-800A/BL	ISTC-1200(a)	1-ISIV-67-800AC1L	ISTC-1200(a)	0-ISIV-70-370B	ISTC-1200(a)
1-VTIV-67-800B/FH	ISTC-1200(a)	1-ISIV-67-800AC2L	ISTC-1200(a)	2-ISIV-67-800AC2L	ISTC-1200(a)
2-VTIV-67-800B/FH	ISTC-1200(a)	1-ISIV-67-800BB1H	ISTC-1200(a)	2-ISIV-67-800BB1H	ISTC-1200(a)
1-VTIV-67-802A/BL	ISTC-1200(a)	1-ISIV-67-800BB2H	ISTC-1200(a)	2-ISIV-67-800BB2H	ISTC-1200(a)
2-VTIV-67-802A/BL	ISTC-1200(a)	1-ISIV-67-802AC1L	ISTC-1200(a)	2-ISIV-67-802AC1L	ISTC-1200(a)
1-VTIV-67-802B/FH	ISTC-1200(a)	1-ISIV-67-802AC2L	ISTC-1200(a)	2-ISIV-67-802AC2L	ISTC-1200(a)
2-VTIV-67-802B/FH	ISTC-1200(a)	1-ISIV-67-802BB1H	ISTC-1200(a)	2-ISIV-67-802BB1H	ISTC-1200(a)
		1-ISIV-67-802BB2H	ISTC-1200(a)	2-ISIV-67-802BB2H	ISTC-1200(a)

Flow Diagram: 47W600-145

VALVE ID	EXEMPTION BASIS	VALVE ID	EXEMPTION BASIS	VALVE ID	EXEMPTION BASIS
0-ISIV-77-395B	ISTA-1100	0-VTIV-77-395D	ISTA-1100	0-VTIV-77-398D	ISTA-1100
0-ISIV-77-396B	ISTA-1100	0-VTIV-77-396D	ISTA-1100	0-VTIV-77-399D	ISTA-1100
0-ISIV-77-397B	ISTA-1100	0-VTIV-77-397D	ISTA-1100	0-VTIV-77-400D	ISTA-1100
0-ISIV-77-398B	ISTA-1100	0-ISIV-77-401B	ISTA-1100	0-VTIV-77-401D	ISTA-1100
0-ISIV-77-399B	ISTA-1100	0-ISIV-77-402B	ISTA-1100	0-VTIV-77-402D	ISTA-1100
0-ISIV-77-400B	ISTA-1100	0-ISIV-77-403B	ISTA-1100	0-VTIV-77-403D	ISTA-1100

Flow Diagram: 47W600-148

VALVE ID	EXEMPTION BASIS	VALVE ID	EXEMPTION BASIS
0-VTIV-77-404E	ISTA-1100	0-ISIV-77-404B	ISTA-1100

Flow Diagram: 47W600-152

VALVE ID	EXEMPTION BASIS	VALVE ID	EXEMPTION BASIS	VALVE ID	EXEMPTION BASIS
0-VTIV-78-203B	ISTA-1100	0-ISIV-78-203C	ISTA-1100	0-ISIV-78-205C	ISTA-1100
0-VTIV-78-204B	ISTA-1100	0-ISIV-78-204C	ISTA-1100	0-ISIV-78-206C	ISTA-1100
0-VTIV-78-205B	ISTA-1100	0-VTIV-78-223B	ISTA-1100	0-ISIV-78-223C	ISTA-1100
0-VTIV-78-206B	ISTA-1100	0-VTIV-78-224B	ISTA-1100	0-ISIV-78-224C	ISTA-1100

Flow Diagram: 47W600-153

VALVE ID	EXEMPTION BASIS	VALVE ID	EXEMPTION BASIS
2-ISIV-70-256B/1	ISTC-1200(a)	2-ISIV-70-256B/2	ISTC-1200(a)

Appendix I - Valves Exempt from the IST Program

Flow Diagram: 47W600-154

VALVE ID	EXEMPTION BASIS	VALVE ID	EXEMPTION BASIS	VALVE ID	EXEMPTION BASIS
1-VTIV-63-303B	ISTC-1200(a)	1-ISIV-63-309B/2	ISTC-1200(a)	1-ISIV-63-303C	ISTC-1200(a)
1-VTIV-63-304B	ISTC-1200(a)	1-ISIV-63-310B/1	ISTC-1200(a)	1-ISIV-63-304C	ISTC-1200(a)
1-ISIV-63-309B/1	ISTC-1200(a)	1-VTIV-63-344B	ISTC-1200(a)	1-ISIV-63-310B/2	ISTC-1200(a)
				1-ISIV-63-344C	ISTC-1200(a)

Flow Diagram: 47W600-156

VALVE ID	EXEMPTION BASIS	VALVE ID	EXEMPTION BASIS	VALVE ID	EXEMPTION BASIS
1-VTIV-63-349B	ISTC-1200(a)	1-VTIV-63-350B	ISTC-1200(a)	1-ISIV-63-349C	ISTC-1200(a)
				1-ISIV-63-350C	ISTC-1200(a)

Flow Diagram: 47W600-159

VALVE ID	EXEMPTION BASIS	VALVE ID	EXEMPTION BASIS	VALVE ID	EXEMPTION BASIS
1-VTIV-67-837A/FH	ISTA-1100	1-ISIV-67-837A/BH	ISTA-1100	1-ISIV-67-836A/BL	ISTA-1100
1-VTIV-67-837B/FL	ISTA-1100	1-ISIV-67-837B/BL	ISTA-1100	1-ISIV-67-836B/BH	ISTA-1100
1-VTIV-67-839A/FH	ISTA-1100	1-ISIV-67-839A/BH	ISTA-1100	1-ISIV-67-838A/BL	ISTA-1100
1-VTIV-67-839B/FL	ISTA-1100	1-ISIV-67-839B/BL	ISTA-1100	1-ISIV-67-838B/BH	ISTA-1100
1-VTIV-67-841A/FH	ISTA-1100	1-ISIV-67-841A/BH	ISTA-1100	1-ISIV-67-840A/BL	ISTA-1100
1-VTIV-67-841B/EL	ISTA-1100	1-ISIV-67-841B/BL	ISTA-1100	1-ISIV-67-840B/BH	ISTA-1100
1-VTIV-67-843A/FH	ISTA-1100	1-ISIV-67-843A/BH	ISTA-1100	1-ISIV-67-842A/BL	ISTA-1100
1-VTIV-67-843B/EL	ISTA-1100	1-ISIV-67-843B/BL	ISTA-1100	1-ISIV-67-842B/BH	ISTA-1100

Flow Diagram: 47W600-161

VALVE ID	EXEMPTION BASIS	VALVE ID	EXEMPTION BASIS	VALVE ID	EXEMPTION BASIS
0-ISIV-82-5015B	ISTA-1100	0-ISIV-18-1002A	ISTA-1100	0-ISIV-18-1003B	ISTA-1100
0-ISIV-82-5016A	ISTA-1100	0-ISIV-18-1002B	ISTA-1100	0-ISIV-82-5015A	ISTA-1100
0-ISIV-82-5019A	ISTA-1100	0-ISIV-18-1003A	ISTA-1100	0-ISIV-82-5016B	ISTA-1100
0-ISIV-82-5020B	ISTA-1100	0-ISIV-82-5019B	ISTA-1100	0-ISIV-82-5020A	ISTA-1100

Flow Diagram: 47W600-162

VALVE ID	EXEMPTION BASIS	VALVE ID	EXEMPTION BASIS	VALVE ID	EXEMPTION BASIS
0-ISIV-67-826AB	ISTA-1100	0-ISIV-67-826BB	ISTA-1100	0-ISIV-67-825AB	ISTA-1100
				0-ISIV-67-825BB	ISTA-1100

Appendix I - Valves Exempt from the IST Program

Flow Diagram: 47W600-163

VALVE ID	EXEMPTION BASIS	VALVE ID	EXEMPTION BASIS	VALVE ID	EXEMPTION BASIS
1-ISIV-70-261B/H	ISTC-1200(a)	1-ISIV-70-262B/L	ISTC-1200(a)	1-ISIV-63-301C	ISTC-1200(a)
1-ISIV-70-275B/H	ISTC-1200(a)	1-ISIV-70-274B/L	ISTC-1200(a)	1-ISIV-63-302C	ISTC-1200(a)
		1-ISIV-70-344B/H	ISTC-1200(a)	1-ISIV-70-345B/L	ISTC-1200(a)

Flow Diagram: 47W600-164

VALVE ID	EXEMPTION BASIS	VALVE ID	EXEMPTION BASIS	VALVE ID	EXEMPTION BASIS
1-ISIV-63-338C/1	ISTC-1200(a)	1-ISIV-63-337C/1	ISTC-1200(a)	1-VTIV-72-337B	ISTC-1200(a)
1-ISIV-63-339B/1	ISTC-1200(a)	1-ISIV-63-337C/2	ISTC-1200(a)	1-ISIV-63-337C/3	ISTC-1200(a)
1-ISIV-63-340B/1	ISTC-1200(a)	1-ISIV-63-338C/2	ISTC-1200(a)	1-VTIV-72-338B	ISTC-1200(a)
				1-ISIV-63-338C/3	ISTC-1200(a)

Flow Diagram: 47W600-166

VALVE ID	EXEMPTION BASIS	VALVE ID	EXEMPTION BASIS
0-ISIV-77-386C	ISTA-1100	0-VTIV-77-386B	ISTA-1100

Flow Diagram: 47W600-167

VALVE ID	EXEMPTION BASIS	VALVE ID	EXEMPTION BASIS	VALVE ID	EXEMPTION BASIS
1-ISIV-3-326B/2	ISTC - 1200(a)	1-ISIV-3-327B/2	ISTC - 1200(a)	1-ISIV-65-48B	ISTC - 1200(a)
1-ISIV-3-329B/2	ISTC - 1200(a)	1-ISIV-62-342B/1	ISTC-1200(a)	1-ISIV-65-49B	ISTC - 1200(a)
1-ISIV-3-330B/2	ISTC - 1200(a)	1-ISIV-62-343B/1	ISTC-1200(a)	1-ISIV-62-342B/2	ISTC-1200(a)
				1-ISIV-62-343B/2	ISTC-1200(a)

Flow Diagram: 47W600-168

VALVE ID	EXEMPTION BASIS	VALVE ID	EXEMPTION BASIS	VALVE ID	EXEMPTION BASIS
1-ISIV-30-447	ISTC - 1200(a)	2-ISIV-30-448	ISTC - 1200(a)	2-ISIV-30-450	ISTC - 1200(a)
1-ISIV-30-449	ISTC - 1200(a)	1-ISIV-30-451	ISTC - 1200(a)	2-ISIV-30-452	ISTC - 1200(a)
		1-ISIV-30-453	ISTC - 1200(a)	2-ISIV-30-454	ISTC - 1200(a)

Flow Diagram: 47W600-169

VALVE ID	EXEMPTION BASIS	VALVE ID	EXEMPTION BASIS	VALVE ID	EXEMPTION BASIS
1-ISIV-70-324C	ISTC-1200(a)	1-ISIV-70-298B	ISTC-1200(a)	1-ISIV-70-303B	ISTC-1200(a)
1-ISIV-70-325C	ISTC-1200(a)	1-ISIV-70-299B	ISTC-1200(a)	1-ISIV-70-304B	ISTC-1200(a)
1-ISIV-70-326C	ISTC-1200(a)	1-ISIV-70-300B	ISTC-1200(a)	1-ISIV-70-305B	ISTC-1200(a)
1-ISIV-70-327C	ISTC-1200(a)	1-ISIV-70-301B	ISTC-1200(a)	1-ISIV-70-322B	ISTC-1200(a)
		1-ISIV-70-302B	ISTC-1200(a)	1-ISIV-70-323B	ISTC-1200(a)

Appendix I - Valves Exempt from the IST Program

Flow Diagram: 47W600-171

VALVE ID	EXEMPTION BASIS	VALVE ID	EXEMPTION BASIS	VALVE ID	EXEMPTION BASIS
1-ISIV-67-849B	ISTC-1200(a)	1-ISIV-67-847B	ISTC-1200(a)	1-ISIV-67-844B	ISTC-1200(a)
1-ISIV-67-850B	ISTC-1200(a)	1-ISIV-67-847C	ISTC-1200(a)	1-ISIV-67-844C	ISTC-1200(a)
1-ISIV-67-850C	ISTC-1200(a)	1-ISIV-67-848B	ISTC-1200(a)	1-ISIV-67-845B	ISTC-1200(a)
1-ISIV-67-851B	ISTC-1200(a)	1-ISIV-67-848C	ISTC-1200(a)	1-ISIV-67-845C	ISTC-1200(a)
1-ISIV-67-851C	ISTC-1200(a)	1-ISIV-67-849D	ISTC-1200(a)	1-ISIV-67-846B	ISTC-1200(a)
				1-ISIV-67-846C	ISTC-1200(a)

Flow Diagram: 47W600-174

VALVE ID	EXEMPTION BASIS	VALVE ID	EXEMPTION BASIS	VALVE ID	EXEMPTION BASIS
1-ISIV-67-830A/BH	ISTC-1200(a)	1-ISIV-70-263B/H	ISTC-1200(a)	1-ISIV-70-277B/H	ISTC-1200(a)
1-ISIV-67-830B/BL	ISTC-1200(a)	1-ISIV-70-264B/L	ISTC-1200(a)	1-VTIV-63-385B	ISTC-1200(a)
1-ISIV-67-831A/BH	ISTC-1200(a)	1-ISIV-70-276B/L	ISTC-1200(a)	1-ISIV-63-385C	ISTC-1200(a)
1-ISIV-67-831B/BL	ISTC-1200(a)	2-ISIV-67-831A/BH	ISTC-1200(a)	1-VTIV-63-386B	ISTC-1200(a)
		2-ISIV-67-831B/BL	ISTC-1200(a)	1-ISIV-63-386C	ISTC-1200(a)

Flow Diagram: 47W600-175

VALVE ID	EXEMPTION BASIS	VALVE ID	EXEMPTION BASIS	VALVE ID	EXEMPTION BASIS
1-ISIV-3-332B	ISTC - 1200(a)	1-ISIV-1-270B/H	ISTC-1200(a)	1-ISIV-1-272B/H	ISTC-1200(a)
1-ISIV-3-333B	ISTC - 1200(a)	1-ISIV-1-271B/L	ISTC-1200(a)	1-ISIV-1-273B/L	ISTC-1200(a)

Flow Diagram: 47W600-179

VALVE ID	EXEMPTION BASIS	VALVE ID	EXEMPTION BASIS	VALVE ID	EXEMPTION BASIS
0-ISIV-84-50B	ISTA-1100	0-ISIV-84-51B	ISTA-1100	1-ISIV-84-54B	ISTA-1100
0-VTIV-84-50D	ISTA-1100	0-ISIV-84-52B	ISTA-1100	1-ISIV-84-55B	ISTA-1100
0-VTIV-84-51D	ISTA-1100	0-ISIV-84-53B	ISTA-1100	1-VTIV-84-55D	ISTA-1100
0-VTIV-84-52D	ISTA-1100	1-VTIV-84-54D	ISTA-1100	1-ISIV-84-56B	ISTA-1100
0-VTIV-84-53D	ISTA-1100	1-VTIV-84-56D	ISTA-1100	1-ISIV-84-57B	ISTA-1100
0-VTIV-84-58D	ISTA-1100	0-ISIV-84-58B	ISTA-1100	1-VTIV-84-57D	ISTA-1100

Appendix I - Valves Exempt from the IST Program

Flow Diagram: 47W600-181

VALVE ID	EXEMPTION BASIS
1-VTIV-72-215B	ISTC-1200(a)
1-VTIV-72-216B	ISTC-1200(a)
1-ISIV-62-307B	ISTC-1200(a)
1-ISIV-62-323B	ISTC-1200(a)

VALVE ID	EXEMPTION BASIS
1-ISIV-62-306B	ISTC-1200(a)
1-ISIV-62-315B	ISTC-1200(a)
1-ISIV-62-322B	ISTC-1200(a)
1-ISIV-62-330B	ISTC-1200(a)
1-ISIV-62-331B	ISTC-1200(a)

VALVE ID	EXEMPTION BASIS
1-ISIV-72-215C	ISTC-1200(a)
1-ISIV-72-216C	ISTC-1200(a)
1-ISIV-62-314B	ISTC-1200(a)
1-ISIV-70-393C	ISTC-1200(a)
1-ISIV-70-394C	ISTC-1200(a)

Flow Diagram: 47W600-187

VALVE ID	EXEMPTION BASIS
1-ISIV-62-353C/2	ISTC-1200(a)

Flow Diagram: 47W600-26

VALVE ID	EXEMPTION BASIS
1-ISIV-1-286B/1	ISTC-1200(a)
1-ISIV-1-286B/2	ISTC-1200(a)
1-ISIV-1-287B	ISTC-1200(a)
1-ISIV-1-294B/1	ISTC-1200(a)
1-ISIV-1-295B	ISTC-1200(a)
1-ISIV-3-295B	ISTC-1200(a)
1-ISIV-3-301B	ISTC-1200(a)

VALVE ID	EXEMPTION BASIS
1-ISIV-3-290B/1	ISTC-1200(a)
1-ISIV-3-291B/1	ISTC-1200(a)
1-ISIV-1-294B/2	ISTC-1200(a)
1-ISIV-3-296B/2	ISTC-1200(a)
1-ISIV-3-297B/1	ISTC-1200(a)
1-ISIV-3-297B/2	ISTC-1200(a)
1-ISIV-68-407B	ISTC-1200(a)

VALVE ID	EXEMPTION BASIS
1-ISIV-3-290B/2	ISTC-1200(a)
1-ISIV-3-290B/3	ISTC-1200(a)
1-ISIV-3-291B/2	ISTC-1200(a)
1-ISIV-3-292B	ISTC-1200(a)
1-ISIV-3-296B/1	ISTC-1200(a)
1-ISIV-3-296B/3	ISTC-1200(a)
1-ISIV-3-298B	ISTC-1200(a)

Flow Diagram: 47W600-27

VALVE ID	EXEMPTION BASIS
1-ISIV-1-280B/1	ISTC-1200(a)
1-ISIV-1-280B/2	ISTC-1200(a)
1-ISIV-1-281B	ISTC-1200(a)
1-ISIV-3-289B	ISTC-1200(a)
1-ISIV-1-306B/1	ISTC-1200(a)
1-ISIV-1-306B/2	ISTC-1200(a)
1-ISIV-1-307B	ISTC-1200(a)
1-ISIV-3-307B	ISTC-1200(a)

VALVE ID	EXEMPTION BASIS
1-ISIV-3-284B/1	ISTC-1200(a)
1-ISIV-3-285B/1	ISTC-1200(a)
1-ISIV-3-287B/1	ISTC-1200(a)
1-ISIV-3-288B/1	ISTC-1200(a)
1-ISIV-3-302B/1	ISTC-1200(a)
1-ISIV-3-303B/1	ISTC-1200(a)
1-ISIV-3-305B/1	ISTC-1200(a)
1-ISIV-3-306B/1	ISTC-1200(a)

VALVE ID	EXEMPTION BASIS
1-ISIV-3-286B	ISTC-1200(a)
1-ISIV-3-287B/2	ISTC-1200(a)
1-ISIV-3-287B/3	ISTC-1200(a)
1-ISIV-3-288B/2	ISTC-1200(a)
1-ISIV-3-304B	ISTC-1200(a)
1-ISIV-3-305B/2	ISTC-1200(a)
1-ISIV-3-305B/3	ISTC-1200(a)
1-ISIV-3-306B/2	ISTC-1200(a)

Appendix I - Valves Exempt from the IST Program

Flow Diagram: 47W600-28

VALVE ID	EXEMPTION BASIS	VALVE ID	EXEMPTION BASIS	VALVE ID	EXEMPTION BASIS
1-VTIV-70-294B	ISTC-1200(a)	1-ISIV-3-281B	ISTC-1200(a)	1-ISIV-3-282B	ISTC-1200(a)
1-VTIV-70-295B	ISTC-1200(a)	1-ISIV-70-294C	ISTC-1200(a)	1-ISIV-70-296C	ISTC-1200(a)
1-ISIV-62-312B	ISTC-1200(a)	1-ISIV-70-295C	ISTC-1200(a)	1-ISIV-70-297C	ISTC-1200(a)
1-ISIV-62-313C	ISTC-1200(a)	1-VTIV-70-296B	ISTC-1200(a)	1-ISIV-62-320C	ISTC-1200(a)
1-VTIV-70-328B	ISTC-1200(a)	1-VTIV-70-297B	ISTC-1200(a)	1-ISIV-62-321C	ISTC-1200(a)
1-VTIV-70-330B	ISTC-1200(a)	1-VTIV-62-320B	ISTC-1200(a)	1-ISIV-70-328C	ISTC-1200(a)
1-VTIV-70-331B	ISTC-1200(a)	1-VTIV-62-321B	ISTC-1200(a)	1-ISIV-70-329C	ISTC-1200(a)
1-ISIV-62-332B	ISTA-1100	1-VTIV-70-329B	ISTC-1200(a)	1-ISIV-70-330C	ISTC-1200(a)
				1-ISIV-70-331C	ISTC-1200(a)

Flow Diagram: 47W600-280

VALVE ID	EXEMPTION BASIS	VALVE ID	EXEMPTION BASIS	VALVE ID	EXEMPTION BASIS
0-VTIV-31-1061B	ISTC-1200(a)	0-ISIV-31-1061C1	ISTC-1200(a)	0-ISIV-31-1067B	ISTC-1200(a)
0-VTIV-31-1062B	ISTC-1200(a)	0-ISIV-31-1061C2	ISTC-1200(a)	0-ISIV-31-1081C1	ISTC-1200(a)
0-ISIV-31-1062C1	ISTC-1200(a)	0-ISIV-31-1062C2	ISTC-1200(a)	0-ISIV-31-1081C2	ISTC-1200(a)
0-VTIV-31-1064D	ISTC-1200(a)	0-ISIV-31-1064B	ISTC-1200(a)	0-ISIV-31-1082C1	ISTC-1200(a)
0-VTIV-31-1067D	ISTC-1200(a)	0-VTIV-31-1081B	ISTC-1200(a)	0-ISIV-31-1082C2	ISTC-1200(a)
0-VTIV-31-1082B	ISTC-1200(a)	0-VTIV-31-1084D	ISTC-1200(a)	0-ISIV-31-1084B	ISTC-1200(a)
		0-VTIV-31-1087D	ISTC-1200(a)	0-ISIV-31-1087B	ISTC-1200(a)

Flow Diagram: 47W600-281

VALVE ID	EXEMPTION BASIS	VALVE ID	EXEMPTION BASIS	VALVE ID	EXEMPTION BASIS
0-VTIV-31-1025B	ISTC-1200(a)	0-ISIV-31-1028C2	ISTC-1200(a)	0-ISIV-31-1025C1	ISTC-1200(a)
0-VTIV-31-1028B	ISTC-1200(a)	0-ISIV-31-1029B	ISTC-1200(a)	0-ISIV-31-1025C2	ISTC-1200(a)
0-VTIV-31-1029D	ISTC-1200(a)	0-ISIV-31-1036B	ISTC-1200(a)	0-ISIV-31-1028C1	ISTC-1200(a)

Flow Diagram: 47W600-282

VALVE ID	EXEMPTION BASIS	VALVE ID	EXEMPTION BASIS	VALVE ID	EXEMPTION BASIS
0-VTIV-31-1040B	ISTC-1200(a)	0-ISIV-31-1040C1	ISTC-1200(a)	0-ISIV-31-1043C2	ISTC-1200(a)
0-VTIV-31-1043B	ISTC-1200(a)	0-ISIV-31-1040C2	ISTC-1200(a)	0-ISIV-31-1044B	ISTC-1200(a)
0-VTIV-31-1044D	ISTC-1200(a)	0-ISIV-31-1043C1	ISTC-1200(a)	0-ISIV-31-1045B	ISTC-1200(a)

Appendix I - Valves Exempt from the IST Program

Flow Diagram: 47W600-284

VALVE ID	EXEMPTION BASIS
0-VTIV-31-1001D	ISTC-1200(a)
0-VTIV-31-1002B	ISTC-1200(a)
0-VTIV-31-1003D	ISTC-1200(a)
0-VTIV-31-1005D	ISTC-1200(a)
0-VTIV-31-1006B	ISTC-1200(a)
0-VTIV-31-1010D	ISTC-1200(a)
0-VTIV-31-1015B	ISTC-1200(a)

VALVE ID	EXEMPTION BASIS
0-ISIV-31-1001B	ISTC-1200(a)
0-ISIV-31-1002C	ISTC-1200(a)
0-ISIV-31-1003B	ISTC-1200(a)
0-ISIV-31-1006C	ISTC-1200(a)
0-VTIV-31-1011B	ISTC-1200(a)
0-VTIV-31-1012D	ISTC-1200(a)
0-VTIV-31-1013D	ISTC-1200(a)
0-VTIV-31-1014D	ISTC-1200(a)

VALVE ID	EXEMPTION BASIS
0-ISIV-31-1004B	ISTC-1200(a)
0-ISIV-31-1005B	ISTC-1200(a)
0-ISIV-31-1010B	ISTC-1200(a)
0-ISIV-31-1011C	ISTC-1200(a)
0-ISIV-31-1012B	ISTC-1200(a)
0-ISIV-31-1013B	ISTC-1200(a)
0-ISIV-31-1014B	ISTC-1200(a)
0-ISIV-31-1015C	ISTC-1200(a)

Flow Diagram: 47W600-287

VALVE ID	EXEMPTION BASIS
0-VTIV-31-1120D	ISTC-1200(a)
0-VTIV-31-1121D	ISTC-1200(a)
0-VTIV-31-1122D	ISTC-1200(a)
0-VTIV-31-1123D	ISTC-1200(a)
0-VTIV-31-1125D	ISTC-1200(a)

VALVE ID	EXEMPTION BASIS
0-ISIV-31-1122B	ISTC-1200(a)
0-ISIV-31-1123B	ISTC-1200(a)
0-VTIV-31-1126D	ISTC-1200(a)
0-VTIV-31-1127D	ISTC-1200(a)
0-VTIV-31-1128D	ISTC-1200(a)

VALVE ID	EXEMPTION BASIS
0-ISIV-31-1120B	ISTC-1200(a)
0-ISIV-31-1121B	ISTC-1200(a)
0-ISIV-31-1125B	ISTC-1200(a)
0-ISIV-31-1126B	ISTC-1200(a)
0-ISIV-31-1127B	ISTC-1200(a)
0-ISIV-31-1128B	ISTC-1200(a)

Flow Diagram: 47W600-288

VALVE ID	EXEMPTION BASIS
1-VTIV-31-1100B	ISTA-1100
1-VTIV-31-1101B	ISTA-1100
1-VTIV-31-1104B	ISTA-1100
1-VTIV-31-1110B	ISTA-1100
1-VTIV-31-1111B	ISTA-1100

VALVE ID	EXEMPTION BASIS
1-ISIV-31-1100C	ISTA-1100
1-ISIV-31-1101C	ISTA-1100
1-VTIV-31-1114B	ISTA-1100
1-ISIV-31-3999B	ISTA-1100
1-ISIV-31-4000B	ISTA-1100

VALVE ID	EXEMPTION BASIS
1-ISIV-31-1104C	ISTA-1100
1-ISIV-31-1110C	ISTA-1100
1-ISIV-31-1111C	ISTA-1100
1-ISIV-31-1114C	ISTA-1100
1-ISIV-31-3997B	ISTA-1100
1-ISIV-31-3998B	ISTA-1100

Appendix I - Valves Exempt from the IST Program

Flow Diagram: 47W600-289

VALVE ID	EXEMPTION BASIS	VALVE ID	EXEMPTION BASIS	VALVE ID	EXEMPTION BASIS
1-ISIV-62-304B	ISTC-1200(a)	1-VTIV-62-432B	ISTC-1200(a)	1-VTIV-62-438B	ISTC-1200(a)
1-ISIV-62-305B	ISTC-1200(a)	1-ISIV-62-432C	ISTC-1200(a)	1-ISIV-62-438C	ISTC-1200(a)
1-ISIV-70-320C	ISTC-1200(a)	1-VTIV-62-433B	ISTC-1200(a)	1-VTIV-62-439B	ISTC-1200(a)
1-ISIV-70-321C	ISTC-1200(a)	1-ISIV-62-433C	ISTC-1200(a)	1-ISIV-62-439C	ISTC-1200(a)
1-ISIV-62-435B	ISTC-1200(a)	1-ISIV-62-434B	ISTC-1200(a)	1-VTIV-62-440B	ISTC-1200(a)
1-ISIV-62-436B	ISTC-1200(a)	1-VTIV-62-441B	ISTC-1200(a)	1-ISIV-62-441C	ISTC-1200(a)
1-ISIV-62-437B	ISTC-1200(a)	1-VTIV-62-442B	ISTC-1200(a)	1-ISIV-62-442C	ISTC-1200(a)
		1-VTIV-62-443B	ISTC-1200(a)	1-ISIV-62-443C	ISTC-1200(a)

Flow Diagram: 47W600-29

VALVE ID	EXEMPTION BASIS	VALVE ID	EXEMPTION BASIS	VALVE ID	EXEMPTION BASIS
1-VTIV-70-317B	ISTC-1200(a)	1-VTIV-70-316B	ISTC-1200(a)	1-ISIV-3-283B	ISTC-1200(a)
1-VTIV-62-328B	ISTC-1200(a)	1-ISIV-62-329C	ISTC-1200(a)	1-ISIV-70-316C	ISTC-1200(a)
1-VTIV-62-329B	ISTC-1200(a)	1-ISIV-63-384C/1	ISTC-1200(a)	1-ISIV-70-317C	ISTC-1200(a)
		1-ISIV-63-384C/2	ISTC-1200(a)	1-ISIV-62-328C	ISTC-1200(a)

Flow Diagram: 47W600-290

VALVE ID	EXEMPTION BASIS	VALVE ID	EXEMPTION BASIS	VALVE ID	EXEMPTION BASIS
1-ISIV-62-425B	ISTC-1200(a)	1-ISIV-62-422B	ISTC-1200(a)	1-VTIV-62-420B	ISTC-1200(a)
1-ISIV-62-428B	ISTC-1200(a)	1-ISIV-62-423B	ISTC-1200(a)	1-ISIV-62-420C	ISTC-1200(a)
1-ISIV-62-429B	ISTC-1200(a)	1-ISIV-62-424B	ISTC-1200(a)	1-VTIV-62-421B	ISTC-1200(a)
1-ISIV-62-430B	ISTC-1200(a)	1-ISIV-62-426C	ISTC-1200(a)	1-ISIV-62-421C	ISTC-1200(a)
1-ISIV-62-431B	ISTC-1200(a)	1-ISIV-62-427C	ISTC-1200(a)	1-VTIV-62-426B	ISTC-1200(a)
				1-VTIV-62-427B	ISTC-1200(a)

Flow Diagram: 47W600-292

VALVE ID	EXEMPTION BASIS	VALVE ID	EXEMPTION BASIS	VALVE ID	EXEMPTION BASIS
1-ISIV-68-367A	ISTC-1200(a)	1-ISIV-68-367B	ISTC-1200(a)	1-ISIV-68-369B	ISTC-1200(a)
1-ISIV-68-368A	ISTC-1200(a)	1-ISIV-68-368B	ISTC-1200(a)	1-ISIV-68-370B	ISTC-1200(a)
1-ISIV-68-369A	ISTC-1200(a)	1-ISIV-68-371A	ISTC-1200(a)	1-ISIV-68-371B	ISTC-1200(a)
1-ISIV-68-370A	ISTC-1200(a)	1-ISIV-68-372A	ISTC-1200(a)	1-ISIV-68-372B	ISTC-1200(a)

Appendix I - Valves Exempt from the IST Program

Flow Diagram: 47W600-30

VALVE ID	EXEMPTION BASIS
1-ISIV-1-284B/1	ISTC-1200(a)
1-ISIV-1-285B	ISTC-1200(a)
1-ISIV-1-292B/1	ISTC-1200(a)

VALVE ID	EXEMPTION BASIS
1-ISIV-1-290C	ISTC-1200(a)
1-ISIV-1-293B	ISTC-1200(a)
1-ISIV-1-298C	ISTC-1200(a)

VALVE ID	EXEMPTION BASIS
1-ISIV-1-270B	ISTC-1200(a)
1-ISIV-1-271B	ISTC-1200(a)
1-ISIV-1-274B	ISTC-1200(a)
1-ISIV-1-275B	ISTC-1200(a)

Flow Diagram: 47W600-307

VALVE ID	EXEMPTION BASIS
1-VTIV-68-401B	ISTC - 1200(a)
1-VTIV-68-402B	ISTC - 1200(a)
1-VTIV-68-403B	ISTC - 1200(a)
1-VTIV-68-404B	ISTC - 1200(a)
1-VTIV-68-411B	ISTC - 1200(a)
1-VTIV-68-412B	ISTC - 1200(a)
1-VTIV-68-413B	ISTC - 1200(a)
1-VTIV-68-414B	ISTC - 1200(a)
1-VTIV-68-424B	ISTC - 1200(a)
1-VTIV-68-431B	ISTC - 1200(a)
1-VTIV-68-432B	ISTC - 1200(a)
1-VTIV-68-433B	ISTC - 1200(a)
1-VTIV-68-434B	ISTC - 1200(a)

VALVE ID	EXEMPTION BASIS
1-ISIV-68-404C/1	ISTC-1200(a)
1-ISIV-68-404C/2	ISTC-1200(a)
1-ISIV-68-404C/3	ISTC-1200(a)
1-ISIV-68-414C/1	ISTC-1200(a)
1-ISIV-68-414C/2	ISTC-1200(a)
1-ISIV-68-414C/3	ISTC-1200(a)
1-VTIV-68-421B	ISTC - 1200(a)
1-VTIV-68-422B	ISTC - 1200(a)
1-VTIV-68-423B	ISTC - 1200(a)
1-ISIV-68-424C/1	ISTC-1200(a)
1-ISIV-68-434C/1	ISTC-1200(a)
1-ISIV-68-434C/2	ISTC-1200(a)
1-ISIV-68-434C/3	ISTC-1200(a)

VALVE ID	EXEMPTION BASIS
1-ISIV-68-401C	ISTC-1200(a)
1-ISIV-68-402C	ISTC-1200(a)
1-ISIV-68-403C	ISTC-1200(a)
1-ISIV-68-411C	ISTC-1200(a)
1-ISIV-68-412C	ISTC-1200(a)
1-ISIV-68-413C	ISTC-1200(a)
1-ISIV-68-421C	ISTC-1200(a)
1-ISIV-68-422C	ISTC-1200(a)
1-ISIV-68-423C	ISTC-1200(a)
1-ISIV-68-424C/2	ISTC-1200(a)
1-ISIV-68-424C/3	ISTC-1200(a)
1-ISIV-68-431C	ISTC-1200(a)
1-ISIV-68-432C	ISTC-1200(a)
1-ISIV-68-433C	ISTC-1200(a)

Flow Diagram: 47W600-308

VALVE ID	EXEMPTION BASIS
1-VTIV-68-407B	ISTC - 1200(a)

Flow Diagram: 47W600-31

VALVE ID	EXEMPTION BASIS
1-ISIV-1-276B/1	ISTC-1200(a)

VALVE ID	EXEMPTION BASIS
1-ISIV-1-496B	ISTC-1200(a)
1-ISIV-1-497B	ISTC-1200(a)

VALVE ID	EXEMPTION BASIS
1-ISIV-1-300B/1	ISTC-1200(a)
1-ISIV-1-300C/1	ISTC-1200(a)

Appendix I - Valves Exempt from the IST Program

Flow Diagram: 47W600-315

VALVE ID	EXEMPTION BASIS	VALVE ID	EXEMPTION BASIS	VALVE ID	EXEMPTION BASIS
1-ISIV-3-293B/1	ISTC-1200(a)	1-ISIV-1-278B	ISTC-1200(a)	1-ISIV-1-279B	ISTC-1200(a)
1-ISIV-3-293B/2	ISTC-1200(a)	1-ISIV-3-280B	ISTC-1200(a)	1-ISIV-1-288B	ISTC-1200(a)
1-ISIV-3-294B/1	ISTC-1200(a)	1-ISIV-3-284B/2	ISTC-1200(a)	1-ISIV-1-289B	ISTC-1200(a)
1-ISIV-3-294B/2	ISTC-1200(a)	1-ISIV-3-285B/2	ISTC-1200(a)	1-ISIV-1-296B	ISTC-1200(a)
1-ISIV-3-299B/2	ISTC-1200(a)	1-ISIV-3-299B/1	ISTC-1200(a)	1-ISIV-1-297B	ISTC-1200(a)
1-ISIV-3-300B/1	ISTC-1200(a)	1-ISIV-3-302B/2	ISTC-1200(a)	1-ISIV-1-304B	ISTC-1200(a)
1-ISIV-3-300B/2	ISTC-1200(a)	1-ISIV-3-303B/2	ISTC-1200(a)	1-ISIV-1-305B	ISTC-1200(a)

Flow Diagram: 47W600-32

VALVE ID	EXEMPTION BASIS	VALVE ID	EXEMPTION BASIS	VALVE ID	EXEMPTION BASIS
1-DRIV-70-306E	ISTC - 1200(a)	1-VTIV-70-306B	ISTC-1200(a)	1-ISIV-70-306C	ISTC-1200(a)
1-ISIV-63-359B	ISTC-1200(a)	1-VTIV-70-307B	ISTC-1200(a)	1-ISIV-70-307C	ISTC-1200(a)
1-ISIV-63-360B	ISTC-1200(a)	1-VTIV-70-308B	ISTC-1200(a)	1-ISIV-70-308C	ISTC-1200(a)
1-ISIV-63-361B	ISTC-1200(a)	1-VTIV-70-309B	ISTC-1200(a)	1-ISIV-70-309C	ISTC-1200(a)
1-ISIV-63-362B	ISTC-1200(a)	1-VTIV-70-318B	ISTC-1200(a)	1-ISIV-70-318C	ISTC-1200(a)
1-ISIV-63-363B	ISTC-1200(a)	1-VTIV-70-319B	ISTC-1200(a)	1-ISIV-70-319C	ISTC-1200(a)
1-ISIV-63-364B	ISTC-1200(a)	1-VTIV-63-383B	ISTC-1200(a)	1-ISIV-63-382C/1	ISTC-1200(a)
1-ISIV-63-381C	ISTC-1200(a)	1-ISIV-63-383C	ISTC-1200(a)	1-ISIV-63-382C/2	ISTC-1200(a)

Flow Diagram: 47W600-325

VALVE ID	EXEMPTION BASIS	VALVE ID	EXEMPTION BASIS	VALVE ID	EXEMPTION BASIS
1-ISIV-70-332B	ISTA-1100	1-ISIV-70-333B	ISTA-1100	1-ISIV-63-305C	ISTC-1200(a)
1-ISIV-70-373B	ISTA-1100	1-ISIV-63-342B	ISTC-1200(a)	1-ISIV-63-306C	ISTC-1200(a)
1-ISIV-70-374B	ISTA-1100	1-ISIV-63-343B	ISTC-1200(a)	1-ISIV-63-307C	ISTC-1200(a)
				1-ISIV-63-308C	ISTC-1200(a)

Flow Diagram: 47W600-327

VALVE ID	EXEMPTION BASIS
1-ISIV-30-157	ISTC - 1200(a)

Appendix I - Valves Exempt from the IST Program

Flow Diagram: 47W600-34

VALVE ID	EXEMPTION BASIS	VALVE ID	EXEMPTION BASIS	VALVE ID	EXEMPTION BASIS
2-VTIV-70-253E	ISTC-1200(a)	2-VTIV-70-253D	ISTC-1200(a)	2-ISIV-70-253B/1	ISTC-1200(a)
2-VTIV-70-254D	ISTC-1200(a)	2-ISIV-70-254B/1	ISTC-1200(a)	2-ISIV-70-253B/2	ISTC-1200(a)
0-ISIV-26-319B	ISTA-1100	2-VTIV-70-254E	ISTC-1200(a)	2-ISIV-70-253B/3	ISTC-1200(a)
2-VTIV-70-365D	ISTC-1200(a)	2-ISIV-70-365B	ISTC-1200(a)	2-ISIV-70-254B/2	ISTC-1200(a)
2-VTIV-70-366D	ISTC-1200(a)	2-ISIV-70-366B	ISTC-1200(a)	2-ISIV-70-254B/3	ISTC-1200(a)

Flow Diagram: 47W600-35

VALVE ID	EXEMPTION BASIS	VALVE ID	EXEMPTION BASIS	VALVE ID	EXEMPTION BASIS
1-VTIV-70-250D	ISTC-1200(a)	1-ISIV-70-250B/1	ISTC-1200(a)	1-ISIV-70-250B/2	ISTC-1200(a)
1-VTIV-70-251D	ISTC-1200(a)	0-ISIV-70-252B/1	ISTC-1200(a)	1-ISIV-70-250B/3	ISTC-1200(a)
0-VTIV-70-252D	ISTC-1200(a)	0-ISIV-70-252B/2	ISTC-1200(a)	1-ISIV-70-251B/1	ISTC-1200(a)
1-VTIV-62-347B/1	ISTA-1100	0-ISIV-70-252B/3	ISTC-1200(a)	1-ISIV-70-251B/2	ISTC-1200(a)
1-VTIV-62-348B/1	ISTA-1100	1-ISIV-62-347B/H	ISTA-1100	1-ISIV-70-251B/3	ISTC-1200(a)
1-VTIV-70-362D	ISTC-1200(a)	1-ISIV-62-348B/L	ISTA-1100	1-ISIV-70-255B/1	ISTC-1200(a)
1-VTIV-70-363D	ISTC-1200(a)	1-ISIV-70-362B	ISTC-1200(a)	1-ISIV-70-363B	ISTC-1200(a)
0-VTIV-70-364D	ISTC-1200(a)	0-ISIV-70-364B	ISTC-1200(a)	1-ISIV-70-431B/1	ISTC-1200(a)
				1-ISIV-70-431B/2	ISTC-1200(a)

Flow Diagram: 47W600-37

VALVE ID	EXEMPTION BASIS	VALVE ID	EXEMPTION BASIS	VALVE ID	EXEMPTION BASIS
0-ISIV-26-578B	ISTA-1100	0-ISIV-26-579B	ISTA-1100	0-ISIV-26-579D	ISTA-1100
0-ISIV-26-578D	ISTA-1100	0-ISIV-26-633B	ISTA-1100	0-ISIV-26-870B	ISTA-1100
		0-ISIV-26-633D	ISTA-1100	0-ISIV-26-870D	ISTA-1100

Flow Diagram: 47W600-38

VALVE ID	EXEMPTION BASIS	VALVE ID	EXEMPTION BASIS	VALVE ID	EXEMPTION BASIS
0-VTIV-67-514B1	ISTC-1200(a)	0-ISIV-67-514B	ISTC-1200(a)	0-ISIV-67-816B	ISTC-1200(a)
0-VTIV-26-614D	ISTA-1100	0-ISIV-26-614B	ISTA-1100	0-ISIV-67-817B	ISTC-1200(a)
0-VTIV-26-615D	ISTA-1100	0-ISIV-26-615B	ISTA-1100	0-ISIV-67-819B	ISTC-1200(a)
				0-ISIV-67-820B	ISTC-1200(a)

Flow Diagram: 47W600-40

VALVE ID	EXEMPTION BASIS	VALVE ID	EXEMPTION BASIS
1-ISIV-3-343C	ISTC - 1200(a)	1-ISIV-3-344C	ISTC - 1200(a)

Appendix I - Valves Exempt from the IST Program

Flow Diagram: 47W600-41

VALVE ID	EXEMPTION BASIS	VALVE ID	EXEMPTION BASIS	VALVE ID	EXEMPTION BASIS
0-VTIV-26-529F	ISTA-1100	0-ISIV-26-531B/1H	ISTA-1100	1-ISIV-70-340B/H	ISTA-1100
0-VTIV-26-530E	ISTA-1100	0-ISIV-26-531B/2	ISTA-1100	1-ISIV-70-341B/L	ISTA-1100
0-VTIV-26-531F	ISTA-1100	0-ISIV-26-532B/1L	ISTA-1100	0-ISIV-26-529B/1	ISTA-1100
0-VTIV-26-532E	ISTA-1100	0-ISIV-26-532B/2	ISTA-1100	0-ISIV-26-529B/2H	ISTA-1100
0-VTIV-67-815B1	ISTC-1200(a)	0-ISIV-67-815B	ISTC-1200(a)	0-ISIV-26-530B/1	ISTA-1100
0-VTIV-67-818B1	ISTC-1200(a)	0-ISIV-67-818B	ISTC-1200(a)	0-ISIV-26-530B/2L	ISTA-1100

Flow Diagram: 47W600-42

VALVE ID	EXEMPTION BASIS	VALVE ID	EXEMPTION BASIS	VALVE ID	EXEMPTION BASIS
0-VTIV-67-511B1	ISTC-1200(a)	0-ISIV-67-511B	ISTC-1200(a)	0-ISIV-67-811B	ISTC-1200(a)
0-ISIV-26-612B	ISTA-1100	0-VTIV-26-612D	ISTA-1100	0-ISIV-67-812B	ISTC-1200(a)
0-ISIV-26-613B	ISTA-1100	0-VTIV-26-613D	ISTA-1100	0-ISIV-67-813B	ISTC-1200(a)
				0-ISIV-67-814B	ISTC-1200(a)

Flow Diagram: 47W600-62

VALVE ID	EXEMPTION BASIS	VALVE ID	EXEMPTION BASIS	VALVE ID	EXEMPTION BASIS
1-ISIV-3-132	ISTC - 1200(a)	0-ISIV-26-313B	ISTA-1100	1-ISIV-3-122	ISTC - 1200(a)
1-VTIV-3-314B	ISTC - 1200(a)	1-ISIV-3-314C/3	ISTC - 1200(a)	1-ISIV-70-255B/2	ISTC-1200(a)
1-ISIV-3-314C/1	ISTC - 1200(a)	1-ISIV-3-315C/2	ISTC - 1200(a)	1-ISIV-3-316C/1	ISTC - 1200(a)
1-ISIV-3-314C/2	ISTC - 1200(a)	1-ISIV-3-315C/3	ISTC - 1200(a)	1-ISIV-3-316C/2	ISTC - 1200(a)
1-VTIV-3-315B	ISTC - 1200(a)	1-VTIV-3-316B	ISTC - 1200(a)	1-ISIV-3-316C/3	ISTC - 1200(a)
1-ISIV-3-315C/1	ISTC - 1200(a)	1-VTIV-3-317B	ISTC - 1200(a)	1-ISIV-3-317C/1	ISTC - 1200(a)
1-ISIV-62-365B	ISTA-1100	2-ISIV-70-368B	ISTC-1200(a)	1-ISIV-3-317C/2	ISTC - 1200(a)
1-VTIV-62-365B1	ISTA-1100	1-ISIV-70-371B	ISTC-1200(a)	1-ISIV-3-317C/3	ISTC - 1200(a)
		1-ISIV-70-372B	ISTC-1200(a)	2-ISIV-70-367B	ISTC-1200(a)

Flow Diagram: 47W600-64

VALVE ID	EXEMPTION BASIS	VALVE ID	EXEMPTION BASIS	VALVE ID	EXEMPTION BASIS
1-VTIV-3-331B	ISTC - 1200(a)	1-ISIV-3-325B	ISTC - 1200(a)	1-ISIV-3-326B/1	ISTC - 1200(a)
1-ISIV-3-331C	ISTC - 1200(a)	1-ISIV-3-328B	ISTC - 1200(a)	1-ISIV-3-327B/1	ISTC - 1200(a)
1-ISIV-68-428C/1	ISTC-1200(a)	1-ISIV-3-329B/1	ISTC - 1200(a)	1-ISIV-3-330B/1	ISTC - 1200(a)
1-ISIV-68-428C/2	ISTC-1200(a)	1-ISIV-3-334B	ISTC - 1200(a)	1-ISIV-68-429C/1	ISTC-1200(a)

Appendix I - Valves Exempt from the IST Program

Flow Diagram: 47W600-65

VALVE ID	EXEMPTION BASIS	VALVE ID	EXEMPTION BASIS	VALVE ID	EXEMPTION BASIS
1-VTIV-3-321B	ISTC - 1200(a)	1-ISIV-3-321C	ISTC - 1200(a)	1-ISIV-1-268B/H	ISTC-1200(a)
1-VTIV-3-322B	ISTC - 1200(a)	1-ISIV-3-322C/1	ISTC - 1200(a)	1-ISIV-1-269B/L	ISTC-1200(a)
1-VTIV-3-323B	ISTC - 1200(a)	1-ISIV-3-323B	ISTC - 1200(a)	1-ISIV-1-274B/H	ISTC-1200(a)
1-VTIV-3-324B	ISTC - 1200(a)	1-ISIV-3-324B	ISTC - 1200(a)	1-ISIV-1-275B/L	ISTC-1200(a)
1-VTIV-3-345B2	ISTC - 1200(a)	1-ISIV-63-345C/2	ISTC-1200(a)	1-ISIV-3-335C	ISTC - 1200(a)
				1-ISIV-3-336C	ISTC - 1200(a)

Flow Diagram: 47W600-75

VALVE ID	EXEMPTION BASIS	VALVE ID	EXEMPTION BASIS	VALVE ID	EXEMPTION BASIS
1-VTIV-68-429B	ISTC - 1200(a)	1-ISIV-68-428F	ISTC-1200(a)	1-VTIV-68-428B	ISTC - 1200(a)
		1-ISIV-68-429C/3	ISTC - 1200(c)	1-ISIV-68-429C/4	ISTC - 1200(c)

Flow Diagram: 47W600-81

VALVE ID	EXEMPTION BASIS	VALVE ID	EXEMPTION BASIS	VALVE ID	EXEMPTION BASIS
0-ISIV-65-300B/H	ISTC - 1200(a)	1-ISIV-65-80B	ISTC - 1200(a)	1-ISIV-65-90B	ISTC - 1200(a)
0-ISIV-65-301B/L	ISTC - 1200(a)	1-ISIV-65-80BB	ISTC - 1200(a)	1-ISIV-65-90BB	ISTC - 1200(a)
0-ISIV-65-302B/H	ISTC - 1200(a)	1-ISIV-65-82B	ISTC - 1200(a)	1-ISIV-65-97B	ISTC - 1200(a)
0-ISIV-65-303B/L	ISTC - 1200(a)	1-ISIV-65-82BB	ISTC - 1200(a)	1-ISIV-65-97BB	ISTC - 1200(a)

Flow Diagram: 47W600-82

VALVE ID	EXEMPTION BASIS	VALVE ID	EXEMPTION BASIS	VALVE ID	EXEMPTION BASIS
1-VTIV-62-353B	ISTC - 1200(a)	1-VTIV-62-352B	ISTC - 1200(a)	1-ISIV-62-352C	ISTC-1200(a)
				1-ISIV-62-353C/1	ISTC-1200(a)

Flow Diagram: 47W600-87

VALVE ID	EXEMPTION BASIS	VALVE ID	EXEMPTION BASIS	VALVE ID	EXEMPTION BASIS
1-ISIV-1-6A	ISTC-1200(a)	1-ISIV-1-13A	ISTC-1200(a)	1-ISIV-1-24A	ISTC-1200(a)
				1-ISIV-1-31A	ISTC-1200(a)

Flow Diagram: 47W600-89

VALVE ID	EXEMPTION BASIS	VALVE ID	EXEMPTION BASIS	VALVE ID	EXEMPTION BASIS
1-ISIV-30-126A	ISTC - 1200(a)	1-ISIV-30-30C/A	ISTC - 1200(a)	1-ISIV-30-44A	ISTC - 1200(a)
1-ISIV-30-127A	ISTC - 1200(a)	1-ISIV-30-310A	ISTC - 1200(a)	1-DRIV-30-45D	ISTC-1200(a)
1-ISIV-30-133A	ISTC - 1200(a)	1-ISIV-30-311A	ISTC - 1200(a)	1-ISIV-30-43A	ISTC - 1200(a)
		1-ISIV-30-42A	ISTC - 1200(a)	1-ISIV-30-45A	ISTC - 1200(a)

Appendix I - Valves Exempt from the IST Program

Flow Diagram: 47W600-92

VALVE ID	EXEMPTION BASIS	VALVE ID	EXEMPTION BASIS	VALVE ID	EXEMPTION BASIS
1-ISIV-1-276B/2	ISTC-1200(a)	1-ISIV-1-300B/2	ISTC-1200(a)	1-ISIV-1-284B/2	ISTC-1200(a)
				1-ISIV-1-292B/2	ISTC-1200(a)

Flow Diagram: 47W600-93

VALVE ID	EXEMPTION BASIS	VALVE ID	EXEMPTION BASIS	VALVE ID	EXEMPTION BASIS
1-ISIV-74-100C	ISTC-1200(a)	1-ISIV-74-104B	ISTC-1200(a)	1-ISIV-74-102B	ISTC-1200(a)
1-ISIV-74-101C	ISTC-1200(a)	1-VTIV-74-107B	ISTC-1200(a)	1-ISIV-74-107C	ISTC-1200(a)
1-ISIV-74-103B	ISTC-1200(a)	1-VTIV-74-108B	ISTC-1200(a)	1-ISIV-74-109B	ISTC-1200(a)
1-ISIV-74-104C	ISTC-1200(a)	1-ISIV-74-108C	ISTC-1200(a)	1-ISIV-74-110B	ISTC-1200(a)
1-ISIV-70-265B/H	ISTC-1200(a)	1-VTIV-74-111B	ISTC-1200(a)	1-VTIV-72-205B/1	ISTC-1200(a)
1-VTIV-70-265F	ISTC-1200(a)	1-ISIV-74-111C	ISTC-1200(a)	1-ISIV-72-205C/1	ISTC-1200(a)
1-ISIV-70-266B/L	ISTC-1200(a)	1-VTIV-72-212B/2	ISTC-1200(a)	1-ISIV-70-278B/L	ISTC-1200(a)
1-VTIV-70-266E	ISTC-1200(a)	1-ISIV-72-212C/2	ISTC-1200(a)	1-ISIV-70-279B/H	ISTC-1200(a)

Flow Diagram: 47W611-121

VALVE ID	EXEMPTION BASIS	VALVE ID	EXEMPTION BASIS	VALVE ID	EXEMPTION BASIS
2-VTIV-67-984B	ISTC - 1200(a)	2-VTIV-67-985B	ISTC - 1200(a)	2-VTIV-67-986B	ISTC - 1200(a)
				2-VTIV-67-987B	ISTC - 1200(a)

Appendix J - Snubbers Exempt from the IST Program

Component ID	Support ID	Mark No	ISO Dwg	Support Dwg	Class	Sys	Type	Mfg	Model	DTPG	Plan
1-SNUB-1-4001	A400-1	A400-1	47W400-200/64		NC	001		PSA	PSA-35	5	37
1-SNUB-1-40010L	A400-10L	A400-10L	47W400-201/314		NC	001		PSA	PSA-35	5	37
1-SNUB-1-40010U	A400-10U	A400-10U	47W400-201/314		NC	001		PSA	PSA-35	5	37
1-SNUB-1-40011	A400-11	A400-11	47W400-201/362		NC	001		PSA	PSA-35	5	37
1-SNUB-1-40012	A400-12	A400-12	47W400-201/402		NC	001		PSA	PSA-100	5	37
1-SNUB-1-40013	A400-13	A400-13	47W400-201/493		NC	001		PSA	PSA-100	5	37
1-SNUB-1-40014	A400-14	A400-14	47W400-201/512		NC	001		PSA	PSA-35	5	37
1-SNUB-1-40015L	A400-15L	A400-15L	47W400-202/543		NC	001		PSA	PSA-35	5	37
1-SNUB-1-40015U	A400-15U	A400-15U	47W400-202/543		NC	001		PSA	PSA-35	5	37
1-SNUB-1-40015W	A400-15W	47A400-15W	47W400-202/543		NC	001		PSA	PSA-35	5	37
1-SNUB-1-4002	A400-2	A400-2	47W400-200/97		NC	001		PSA	PSA-100	5	37
1-SNUB-1-4003	A400-3	A400-3	47W400-200/120		NC	001		PSA	PSA-35	5	37
1-SNUB-1-4004	A400-4	47A400-4	47W400-200/125		NC	001		PSA	PSA-35	5	37
1-SNUB-1-4005	A400-5	A400-5	47W400-200/140		NC	001		PSA	PSA-35	5	37
1-SNUB-1-4006	A400-6	A400-6	47W400-200/153		NC	001		PSA	PSA-100	5	37
1-SNUB-1-4007L	A400-7L	A400-7L	47W400-200-/158		NC	001		PSA	PSA-35	5	37
1-SNUB-1-4007U	A400-7U	A400-7U	47W400-200/158		NC	001		PSA	PSA-35	5	37
1-SNUB-1-4008	A400-8	A400-8	47W400-200/181		NC	001		PSA	PSA-100	5	37
1-SNUB-1-4009L	A400-9L	A400-9L	47W400-200/214		NC	001		PSA	PSA-10	5	37
1-SNUB-1-4009U	A400-9U	A400-9U	47W400-200/214		NC	001		PSA	PSA-10	5	37
1-SNUB-3-3A289	1-03A-289	1-03A-289	47W401-210/16A		NC	003A		PSA	PSA-35	3C	37
1-SNUB-3-3A377	1-03A-377	1-03A-377	47W401-212A/44		2	003A		PSA	PSA-3	1	37
1-SNUB-3-40192	47A401-9-2	47A401-9-2	47W401-422/83		2	003A		PSA	PSA-1/2	1	37

Appendix J - Snubbers Exempt from the IST Program

Page 2 of 12

Component ID	Support ID	Mark No	ISO Dwg	Support Dwg	Class	Sys	Type	Mfg	Model	DTPG	Plan
1-SNUB-3-40195	47A401-9-5	47A401-9-5	47W401-421/84		NC	003A		PSA	PSA-1/4	3A	37
1-SNUB-15-40011109	47A400-11-109	47A400-11-109	47W400-206/359		NC	015		PSA	PSA-1/4	3A	37
1-SNUB-15-400710	47A400-7-10	47A400-7-10	47W400-217B/146		NC	015		PSA	PSA-1	4	37
1-SNUB-15-400712	47A400-7-12	47A400-7-12	47W400-217B/143		NC	015		PSA	PSA-3	4	37
1-SNUB-15-400812L	47A400-8-12	47A400-8-12	47W400-217B/J143		NC	015		PSA	PSA-1	4	37
1-SNUB-15-400812U	47A400-8-12	47A400-8-12	47W400-217B/J143		NC	015		PSA	PSA-1	4	37
1-SNUB-30-91531	47A915-3-01	47A915-3-01	47W915-102/85		NC	030		PSA	PSA-3	4	37
1-SNUB-30-915333	47A915-3-33	47A915-3-33	47W915-102/100		NC	030		PSA	PSA-1	4	37
1-SNUB-30-915371E	47A915-3-71	47A915-3-71	47W915-102/40		NC	030		PSA	PSA-1	4	37
1-SNUB-30-915371W	47A915-3-71	47A915-3-71	47W915-102/40		NC	030		PSA	PSA-1	4	37
1-SNUB-62-406109E	47A406-10-9	47A406-10-9	47W406-304/465		NC	062		PSA	PSA-1/4	3A	37
1-SNUB-62-406109W	47A406-10-9	47A406-10-9	47W406-304/465		NC	062		PSA	PSA-1/4	3A	37
1-SNUB-62-40616	47A406-01-006	47A406-01-006	47W406-203A/126B (ISI-0424-C-03)		NC	062		PSA	PSA-1/2	4	37
1-SNUB-62-40681	47A406-8-1	47A406-8-1	47W406-301/2		NC	062		PSA	PSA-1/4	3A	37
1-SNUB-62-406810	47A406-8-10	47A406-8-10	47W406-301/545		NC	062		PSA	PSA-1/4	3A	37
1-SNUB-62-406812N	47A406-8-12	47A406-8-12	47W406-303/4		NC	062		PSA	PSA-1/4	3A	37
1-SNUB-62-406812W	47A406-8-12	47A406-8-12	47W406-303/4		NC	062		PSA	PSA-1/4	3A	37
1-SNUB-62-406815	47A406-8-15	47A406-8-15	47W406-303A/290		NC	062		PSA	PSA-1/4	3A	37

Appendix J - Snubbers Exempt from the IST Program

Page 3 of 12

Component ID	Support ID	Mark No	ISO Dwg	Support Dwg	Class	Sys	Type	Mfg	Model	DTPG	Plan
1-SNUB-62-406818E	47A406-8-18	47A406-8-18	47W406-303/67		NC	062		PSA	PSA-1/2	3A	37
1-SNUB-62-406818N	47A406-8-18	47A406-8-18	47W406-303/67		NC	062		PSA	PSA-1/4	3A	37
1-SNUB-62-406821	47A406-8-21	47A406-8-21	47W406-303/270		NC	062		PSA	PSA-1/4	3A	37
1-SNUB-62-406825	47A406-8-25	47A406-8-25	47W406-303/136		NC	062		PSA	PSA-1/4	3A	37
1-SNUB-62-40682L	47A406-8-2	47A406-8-2	47W406-301/1360		NC	062		PSA	PSA-1/4	3A	37
1-SNUB-62-40682U	47A406-8-2	47A406-8-2	47W406-301/1370		NC	062		PSA	PSA-1/4	3A	37
1-SNUB-62-406833	47A406-8-33	47A406-8-33	47W406-303/111		NC	062		PSA	PSA-1/4	3A	37
1-SNUB-62-406834	47A406-8-34	47A406-8-34	47W406-303/100		NC	062		PSA	PSA-1/4	3A	37
1-SNUB-62-406835	47A406-8-35	47A406-8-35	47W406-303/1410		NC	062		PSA	PSA-1/2	3A	37
1-SNUB-62-40684	47A406-8-4	47A406-8-4	47W406-301/41		NC	062		PSA	PSA-1/4	3A	37
1-SNUB-62-40686	47A406-8-6	47A406-8-6	47W406-301/1680		NC	062		PSA	PSA-1/4	3A	37
1-SNUB-62-406879E	47A406-8-79	47A406-8-79	47W406-303-1/1205		NC	062		PSA	PSA-1/2	3A	37
1-SNUB-62-406879W	47A406-8-79	47A406-8-79	47W406-303-1/1205		NC	062		PSA	PSA-1/2	3A	37
1-SNUB-62-406881	47A406-8-81	47A406-8-81	47W406-303/1216		NC	062		PSA	PSA-1/4	3A	37
1-SNUB-62-40689N	47A406-8-9	47A406-8-9	47W406-301/70		NC	062		PSA	PSA-1/4	3A	37
1-SNUB-62-40689W	47A406-8-9	47A406-8-9	47W406-301/70		NC	062		PSA	PSA-1/4	3A	37
1-SNUB-62-406913	47A406-9-13	47A406-9-13	47W406-304/30A		NC	062		PSA	PSA-1/4	3A	37

Appendix J - Snubbers Exempt from the IST Program

Page 4 of 12

Component ID	Support ID	Mark No	ISO Dwg	Support Dwg	Class	Sys	Type	Mfg	Model	DTPG	Plan
1-SNUB-62-406918E	47A406-9-18	47A406-9-18	47W406-304/67		NC	062		PSA	PSA-1/4	3A	37
1-SNUB-62-406918W	47A406-9-18	47A406-9-18	47W406-304/67		NC	062		PSA	PSA-1/4	3A	37
1-SNUB-62-406930	47A406-9-30	47A406-9-30	47W406-304/1660		NC	062		PSA	PSA-1/4	3A	37
1-SNUB-62-406931	47A406-9-31	47A406-9-31	47W406-304/1670		NC	062		PSA	PSA-1/4	3A	37
1-SNUB-62-40695N	47A406-9-5	47A406-9-5	47W406-302/42		NC	062		PSA	PSA-1/4	3A	37
1-SNUB-62-40695W	47A406-9-5	47A406-9-5	47W406-302/42		NC	062		PSA	PSA-1/4	3A	37
1-SNUB-62-40699	47A406-9-9	47A406-9-9	47W406-302/63A		NC	062		PSA	PSA-1/4	3A	37
1-SNUB-62-LCVR105	62-1LCV-R105	62-1LCV-R105	47W555-203/187		3	062		PSA	PSA-1/4	1	37
1-SNUB-63-4351033	47A435-10-33	47A435-10-33	47W435-217D/X35		NC	063		PSA	PSA-1/4	3A	37
1-SNUB-63-4351036	47A435-10-36	47A435-10-36	47W435-281/X23S		NC	063		PSA	PSA-1/4	3A	37
1-SNUB-63-4351048	47A435-10-48	47A435-10-48	47W435-217D/X23S		NC	063		PSA	PSA-1/4	3A	37
1-SNUB-63-435677	47A435-6-77	47A435-6-77	47W435-260/175M		NC	063		PSA	PSA-1/4	3A	37
1-SNUB-63-435689E	47A435-6-89	47A435-6-89	47W435-217C		NC	063		PSA	PSA-1/4	3A	37
1-SNUB-63-435689S	47A435-6-89	47A435-6-89	47W435-217C		NC	063		PSA	PSA-1/4	3A	37
1-SNUB-63-435933	47A435-9-33	47A435-9-33	47W435-220C/706A		NC	063		PSA	PSA-1/4	3A	37
1-SNUB-63-435976	47A435-9-76	47A435-9-76	47W435-222/701L		NC	063		PSA	PSA-1/4	3A	37
1-SNUB-63-435980	47A435-9-80	47A435-9-80	47W435-220C		NC	063		PSA	PSA-1/2	3A	37

Appendix J - Snubbers Exempt from the IST Program

Page 5 of 12

Component ID	Support ID	Mark No	ISO Dwg	Support Dwg	Class	Sys	Type	Mfg	Model	DTPG	Plan
1-SNUB-63-435981	47A435-9-81	47A435-9-81	47W435-220C		NC	063		PSA	PSA-1/2	3A	37
1-SNUB-68-465121N	47A465-1-21	47A465-1-21	47W465-235/14		NC	068		PSA	PSA-3	3B	37
1-SNUB-68-465121S	47A465-1-21	47A465-1-21	47W465-235/14		NC	068		PSA	PSA-3	3B	37
1-SNUB-68-465131	47A465-1-31	47A465-1-31	47W465-200/242		2	068		PSA	PSA-1/2	1	37
1-SNUB-68-465132	47A465-1-32	47A465-1-32	47W465-200/595		2	068		PSA	PSA-1/2	1	37
1-SNUB-68-465165	47A465-1-65	47A465-1-65	47W465-235/20		NC	068		PSA	PSA-3	3B	37
1-SNUB-68-465166	47A465-1-66	47A465-1-66	47W465-235/22		NC	068		PSA	PSA-3	3B	37
1-SNUB-68-465237	47A465-2-37	47A465-2-37	47W465-211A/75BB		NC	068		PSA	PSA-1	3B	37
1-SNUB-68-465238	47A465-2-38	47A465-2-38	47W465-211/75B		NC	068		PSA	PSA-1	3B	37
1-SNUB-68-465239	47A465-2-39	47A465-2-39	47W465-211/56B		NC	068		PSA	PSA-1	3B	37
1-SNUB-68-465240	47A465-2-40	47A465-2-40	47W465-211/56B		NC	068		PSA	PSA-1	3B	37
1-SNUB-68-465348L	47A465-3-48	47A465-3-48	47W406-320B/405		NC	068		PSA	PSA-1	3B	37
1-SNUB-68-465348U	47A465-3-48	47A465-3-48	47W406-320B/405		NC	068		PSA	PSA-1	3B	37
1-SNUB-68-68120	1-68-120	1-68-120	47W465-211/91		NC	068		PSA	PSA-10	3B	37
1-SNUB-68-68366	1-68-366	1-68-366	47W406-328/36A		NC	068		PSA	PSA-1/4	3A	37
1-SNUB-68-68370	1-68-370	1-68-370	47W406-328/44A		NC	068		PSA	PSA-1/4	3A	37
1-SNUB-68-68407E	1-68-407	1-68-407	47W465-212/11A		NC	068		PSA	PSA-3	3B	37
1-SNUB-68-68407W	1-68-407	1-68-407	47W465-212/11A		NC	068		PSA	PSA-3	3B	37

Appendix J - Snubbers Exempt from the IST Program

Page 6 of 12

Component ID	Support ID	Mark No	ISO Dwg	Support Dwg	Class	Sys	Type	Mfg	Model	DTPG	Plan
1-SNUB-68-68408E	1-68-408	1-68-408	47W465-212/13A		NC	068		PSA	PSA-3	3B	37
1-SNUB-68-68408W	1-68-408	1-68-408	47W465-212/13A		NC	068		PSA	PSA-3	3B	37
1-SNUB-68-68409L	1-68-409	1-68-409	47W465-212/16		NC	068		PSA	PSA-3	3B	37
1-SNUB-68-68409U	1-68-409	1-68-409	47W465-212/16		NC	068		PSA	PSA-3	3B	37
1-SNUB-68-68410N	1-68-410	1-68-410	47W465-211/20G		NC	068		PSA	PSA-10	3B	37
1-SNUB-68-68410S	1-68-410S	1-68-410	47W465-211/20G		NC	068		PSA	PSA-10	3B	37
1-SNUB-68-68418E	1-68-418	1-68-418	47W465-211/58		NC	068		PSA	PSA-35	3C	37
1-SNUB-68-68418W	1-68-418	1-68-418	47W465-211/58		NC	068		PSA	PSA-35	3C	37
1-SNUB-68-68424E	1-68-424	1-68-424	47W465-211/76A		NC	068		PSA	PSA-35	3C	37
1-SNUB-68-68424W	1-68-424	1-68-424	47W465-211/76A		NC	068		PSA	PSA-35	3C	37
1-SNUB-68-68429L	1-68-429	1-68-429	47W465-211/92		NC	068		PSA	PSA-10	3B	37
1-SNUB-68-68429U	1-68-429	1-68-429	47W465-211/92		NC	068		PSA	PSA-10	3B	37
1-SNUB-68-68445	1-68-445	1-68-445	47W465-211/97		NC	068		PSA	PSA-3	3B	37
1-SNUB-68-68446L	1-68-446	1-68-446	47W465-211/97B		NC	068		PSA	PSA-10	3B	37
1-SNUB-68-68446U	1-68-446	1-68-446	47W465-211/97B		NC	068		PSA	PSA-10	3B	37
1-SNUB-68-68447	1-68-447	1-68-447	47W465-211B/97		NC	068		PSA	PSA-3	3B	37
1-SNUB-68-6873	1-68-73	1-68-73	47W465-212/16A		NC	068		PSA	PSA-1	3B	37
1-SNUB-70-4642015	47A464-20-15	47A464-20-15	47W464-248/67A		NC	070		PSA	PSA-10	3B	37

Appendix J - Snubbers Exempt from the IST Program

Component ID	Support ID	Mark No	ISO Dwg	Support Dwg	Class	Sys	Type	Mfg	Model	DTPG	Plan
2-SNUB-1-40016		47A400-16	47W400-200	47A400-16	NC	001	M	Pacific Scientific	PSA 35	5	10%
2-SNUB-1-40017		47A400-17	47W400-200	47A400-17	NC	001	M	Pacific Scientific	PSA 100	5	10%
2-SNUB-1-40018		47A400-18	47W400-200	47A400-18	NC	001	M	Pacific Scientific	PSA 35	5	10%
2-SNUB-1-40019		47A400-19	47W400-200	47A400-19	NC	001	M	Pacific Scientific	PSA 35	5	10%
2-SNUB-1-40020		47A400-20	47W400-200	47A400-20	NC	001	M	Pacific Scientific	PSA 35	5	10%
2-SNUB-1-40021		47A400-21	47W400-200	47A400-21	NC	001	M	Pacific Scientific	PSA 100	5	10%
2-SNUB-1-40022B		47A400-22	47W400-200	47A400-22	NC	001	M	Pacific Scientific	PSA 35	5	10%
2-SNUB-1-40022T		47A400-22	47W400-200	47A400-22	NC	001	M	Pacific Scientific	PSA 35	5	10%
2-SNUB-1-40023		47A400-23	47W400-200	47A400-23	NC	001	M	Pacific Scientific	PSA 100	5	10%
2-SNUB-1-40024B		47A400-24	47W400-200	47A400-24	NC	001	M	Pacific Scientific	PSA 10	5	10%
2-SNUB-1-40024T		47A400-24	47W400-200	47A400-24	NC	001	M	Pacific Scientific	PSA 10	5	10%
2-SNUB-1-40025B		47A400-25	47W400-201	47A400-25	NC	001	M	Pacific Scientific	PSA 35	5	10%
2-SNUB-1-40025T		47A400-25	47W400-201	47A400-25	NC	001	M	Pacific Scientific	PSA 35	5	10%
2-SNUB-1-40026		47A400-26	47W400-201	47A400-26	NC	001	M	Pacific Scientific	PSA 35	5	10%
2-SNUB-1-40027		47A400-27	47W400-201	47A400-27	NC	001	M	Pacific Scientific	PSA 100	5	10%
2-SNUB-1-40028		47A400-28	47W400-201	47A400-28	NC	001	M	Pacific Scientific	PSA 100	5	10%
2-SNUB-1-40029		47A400-29	47W400-201	47A400-29	NC	001	M	Pacific Scientific	PSA 35	5	10%

Appendix J - Snubbers Exempt from the IST Program

Component ID	Support ID	Mark No	ISO Dwg	Support Dwg	Class	Sys	Type	Mfg	Model	DTPG	Plan
2-SNUB-1-40030		47A400-30B	47W400-202	47A400-30B	NC	001	M	Pacific Scientific	PSA 35	5	10%
2-SNUB-1-40030B		47A400-30	47W400-202	47A400-30	NC	001	M	Pacific Scientific	PSA 35	5	10%
2-SNUB-1-40030T		47A400-30	47W400-202	47A400-30	NC	001	M	Pacific Scientific	PSA 35	5	10%
2-SNUB-15-111		2-01B-130	2-47W400-229	2-01B-130	NC	015	M	Pacific Scientific	PSA 1/4	3A	10%
2-SNUB-15-112		2-01B-131	2-47W400-229	2-01B-131	NC	015	M	Pacific Scientific	PSA 1/4	3A	10%
2-SNUB-15-119		47A400-6-394	2-47W400-232	47A400-6-394	NC	015	M	Pacific Scientific	PSA 3	4	10%
2-SNUB-62-142		47A406-13-2	2-47W406-305	47A406-13-2	NC	062	M	Pacific Scientific	PSA 1/4	3A	10%
2-SNUB-62-148		47A406-14-25	2-47W406-308	47A406-14-25	NC	062	M	Pacific Scientific	PSA 1/4	3A	10%
2-SNUB-62-149N		47A406-14-26	2-47W406-308	47A406-14-26	NC	062	M	Pacific Scientific	PSA 1/2	3A	10%
2-SNUB-62-149S		47A406-14-26	2-47W406-308	47A406-14-26	NC	062	M	Pacific Scientific	PSA 1/2	3A	10%
2-SNUB-62-154		47A406-14-40	2-47W406-308	47A406-14-40	NC	062	M	Pacific Scientific	PSA 1/4	3A	10%
2-SNUB-62-172		47A465-3-52	2-47W406-320	47A465-3-52	NC	062	M	Pacific Scientific	PSA 3	3B	10%
2-SNUB-62-192		2-62A-148	2-47W406-313	2-62A-148	NC	062	M	Pacific Scientific	PSA 1	3B	10%
2-SNUB-62-506		2-47A560-38-2	2-47W406-348	2-47A560-38-2	NC	062	M	Pacific Scientific	PSA 1/4	3A	10%
2-SNUB-63-272N		47A435-16-62	2-47W435-265	47A435-16-62	NC	063	M	Pacific Scientific	PSA 1/2	3A	10%
2-SNUB-63-272S		47A435-16-62	2-47W435-265	47A435-16-62	NC	063	M	Pacific Scientific	PSA 1/2	3A	10%
2-SNUB-63-273S		47A435-16-66	2-47W435-265	47A435-16-66	NC	063	M	Pacific Scientific	PSA 1	3B	10%

Appendix J - Snubbers Exempt from the IST Program

Component ID	Support ID	Mark No	ISO Dwg	Support Dwg	Class	Sys	Type	Mfg	Model	DTPG	Plan
2-SNUB-63-440		2-47A435-12-6	2-47W435-265	2-47A435-12-6	NC	063	M	Pacific Scientific	PSA 1/4	4	10%
2-SNUB-63-442		2-47A435-16-73	2-47W435-265A	2-47A435-16-73	NC	063	M	Pacific Scientific	PSA 1/4	3A	10%
2-SNUB-63-443		2-47A435-16-77	2-47W435-265A	2-47A435-16-77	NC	063	M	Pacific Scientific	PSA 1/4	3A	10%
2-SNUB-63-479		2-47A435-16-78	2-47W435-265A	2-47A435-16-78	NC	063	M	Pacific Scientific	PSA 1/4	3A	10%
2-SNUB-68-326		2-68-073	2-47W465-212	2-68-073	NC	068	M	Pacific Scientific	PSA 1/2	3A	10%
2-SNUB-68-330N		2-68-100	2-47W465-212	2-68-100	NC	068	M	Pacific Scientific	PSA 1	3B	10%
2-SNUB-68-330W		2-68-100	2-47W465-212	2-68-100	NC	068	M	Pacific Scientific	PSA 1	3B	10%
2-SNUB-68-331		2-47A465-2-69	2-47W465-212	2-47A465-2-69	NC	068	M	Pacific Scientific	PSA 3	3B	10%
2-SNUB-68-332		2-68-111	2-47W465-212	2-68-111	NC	068	M	Pacific Scientific	PSA 1	3B	10%
2-SNUB-68-333		2-68-117	2-47W465-212	2-68-117	NC	068	M	Pacific Scientific	PSA 3	3B	10%
2-SNUB-68-334		2-68-120	2-47W465-212	2-68-120	NC	068	M	Pacific Scientific	PSA 1	3B	10%
2-SNUB-68-335		2-68-406	2-47W465-212	2-68-406	NC	068	M	Pacific Scientific	PSA 10	3B	10%
2-SNUB-68-336E		2-68-407	2-47W465-212	2-68-407	NC	068	M	Pacific Scientific	PSA 10	3B	10%
2-SNUB-68-336W		2-68-407	2-47W465-212	2-68-407	NC	068	M	Pacific Scientific	PSA 10	3B	10%
2-SNUB-68-337E		2-68-408	2-47W465-212	2-68-408	NC	068	M	Pacific Scientific	PSA 3	3B	10%
2-SNUB-68-337W		2-68-408	2-47W465-212	2-68-408	NC	068	M	Pacific Scientific	PSA 3	3B	10%
2-SNUB-68-338E		2-68-409	2-47W465-212	2-68-409	NC	068	M	Pacific Scientific	PSA 3	3B	10%

Appendix J - Snubbers Exempt from the IST Program

Component ID	Support ID	Mark No	ISO Dwg	Support Dwg	Class	Sys	Type	Mfg	Model	DTPG	Plan
2-SNUB-68-338W		2-68-409	2-47W465-212	2-68-409	NC	068	M	Pacific Scientific	PSA 3	3B	10%
2-SNUB-68-339E		2-68-410	2-47W465-211	2-68-410	NC	068	M	Pacific Scientific	PSA 10	3B	10%
2-SNUB-68-339W		2-68-410	2-47W465-211	2-68-410	NC	068	M	Pacific Scientific	PSA 10	3B	10%
2-SNUB-68-341		2-68-416	2-47W465-212	2-68-416	NC	068	M	Pacific Scientific	PSA 3	3B	10%
2-SNUB-68-342E		2-68-418	2-47W465-212	2-68-418	NC	068	M	Pacific Scientific	PSA 10	3B	10%
2-SNUB-68-342W		2-68-418	2-47W465-212	2-68-418	NC	068	M	Pacific Scientific	PSA 10	3B	10%
2-SNUB-68-343E		2-68-424	2-47W465-211	2-68-424	NC	068	M	Pacific Scientific	PSA 10	3B	10%
2-SNUB-68-343W		2-68-424	2-47W465-211	2-68-424	NC	068	M	Pacific Scientific	PSA 10	3B	10%
2-SNUB-68-345N		2-68-428	2-47W465-212	2-68-428	NC	068	M	Pacific Scientific	PSA 3	3B	10%
2-SNUB-68-345S		2-68-428	2-47W465-212	2-68-428	NC	068	M	Pacific Scientific	PSA 3	3B	10%
2-SNUB-68-346E		2-68-429	2-47W465-211	2-68-429	NC	068	M	Pacific Scientific	PSA 3	3B	10%
2-SNUB-68-346W		2-68-429	2-47W465-211	2-68-429	NC	068	M	Pacific Scientific	PSA 3	3B	10%
2-SNUB-68-347		2-68-431	2-47W465-211	2-68-431	NC	068	M	Pacific Scientific	PSA 10	3B	10%
2-SNUB-68-348		2-68-444	2-47W465-212	2-68-444	NC	068	M	Pacific Scientific	PSA 3	3B	10%
2-SNUB-68-349		2-68-445	2-47W465-211	2-68-445	NC	068	M	Pacific Scientific	PSA 3	3B	10%
2-SNUB-68-350N		2-47A465-2-23	2-47W465-212	2-47A465-2-23	NC	068	M	Pacific Scientific	PSA 3	3B	10%
2-SNUB-68-350S		2-47A465-2-23	2-47W465-212	2-47A465-2-23	NC	068	M	Pacific Scientific	PSA 3	3B	10%

Appendix J - Snubbers Exempt from the IST Program

Component ID	Support ID	Mark No	ISO Dwg	Support Dwg	Class	Sys	Type	Mfg	Model	DTPG	Plan
2-SNUB-68-355B		2-47A465-2-32	2-47W465-212	2-47A465-2-32	NC	068	M	Pacific Scientific	PSA 10	3B	10%
2-SNUB-68-355T		2-47A465-2-32	2-47W465-212	2-47A465-2-32	NC	068	M	Pacific Scientific	PSA 10	3B	10%
2-SNUB-68-356B		2-47A465-2-33	2-47W465-212	2-47A465-2-33	NC	068	M	Pacific Scientific	PSA 10	3B	10%
2-SNUB-68-356T		2-47A465-2-33	2-47W465-212	2-47A465-2-33	NC	068	M	Pacific Scientific	PSA 10	3B	10%
2-SNUB-68-359E		47A465-1-69	2-47W465-235	47A465-1-69	NC	068	M	Pacific Scientific	PSA 3	3B	10%
2-SNUB-68-359W		47A465-1-69	2-47W465-235	47A465-1-69	NC	068	M	Pacific Scientific	PSA 3	3B	10%
2-SNUB-68-360		47A465-1-71	2-47W465-235	47A465-1-71	NC	068	M	Pacific Scientific	PSA 3	3B	10%
2-SNUB-68-361		47A465-1-73	2-47W465-235	47A465-1-73	NC	068	M	Pacific Scientific	PSA 3	3B	10%
2-SNUB-68-362E		47A465-1-81	2-47W465-235	47A465-1-81	NC	068	M	Pacific Scientific	PSA 3	3B	10%
2-SNUB-68-362W		47A465-1-81	2-47W465-235	47A465-1-81	NC	068	M	Pacific Scientific	PSA 3	3B	10%
2-SNUB-68-363E		47A465-1-82	2-47W465-235	47A465-1-82	NC	068	M	Pacific Scientific	PSA 3	3B	10%
2-SNUB-68-363W		47A465-1-82	2-47W465-235	47A465-1-82	NC	068	M	Pacific Scientific	PSA 3	3B	10%
2-SNUB-68-457		2-68-105	2-47W465-212	2-68-105	NC	068	M	Pacific Scientific	PSA 3	3B	10%
2-SNUB-68-458E		2-68-422	2-47W465-212	2-68-422	NC	068	M	Pacific Scientific	PSA 3	3B	10%
2-SNUB-68-458W		2-68-422	2-47W465-212	2-68-422	NC	068	M	Pacific Scientific	PSA 3	3B	10%
2-SNUB-68-460N		2-68-405	2-47W465-212	2-68-405	NC	068	M	Pacific Scientific	PSA 3	3B	10%
2-SNUB-68-460S		2-68-405	2-47W465-212	2-68-405	NC	068	M	Pacific Scientific	PSA 3	3B	10%

Appendix J - Snubbers Exempt from the IST Program

Component ID	Support ID	Mark No	ISO Dwg	Support Dwg	Class	Sys	Type	Mfg	Model	DTPG	Plan
2-SNUB-68-461E		2-68-449	2-47W465-211	2-68-449	NC	068	M	Pacific Scientific	PSA 3	3B	10%
2-SNUB-68-461W		2-68-449	2-47W465-211	2-68-449	NC	068	M	Pacific Scientific	PSA 3	3B	10%
2-SNUB-68-462		2-68-447	2-47W465-211	2-68-447	NC	068	M	Pacific Scientific	PSA 3	3B	10%
2-SNUB-68-463E		2-68-404	2-47W465-212	2-68-404	NC	068	M	Pacific Scientific	PSA 35	3C	10%
2-SNUB-68-463W		2-68-404	2-47W465-212	2-68-404	NC	068	M	Pacific Scientific	PSA 35	3C	10%