SEISMIC QUALIFICATION TEST REPORT

for

CORE PROTECTION CALCULATOR NO. 1

CORE PROTECTION CALCULATOR NO. 2

Report Number N-46474P038368

for

Combustion Engineering

P.O. 9873222/13172

Performed by J. M. Dreher Date 8-13-80
J. Dreher, Application Engineer

Prepared by L. Geanuracos Date 8-13-80
L. Geanuracos, Cognizant Engineer

Approved by A. Gura Date 8-13-80
A. Gura, Director of Engineering

8303110260 830309
PDR ADOCK 05000389
A PDR

Rev. 01

RECORD OF REVISIONS

NO.	DATE	PAGES INVOLVED	PREPARED BY	APPROVALS
00	5/30/80	All	L. Geanuracos	A. Gura
01	8/12/80	1,3,5,6,7,8 and Appendices	L. Geanuracos	A. Gura

TABLE OF CONTENTS

Paragraph		Page No.
1.0	Abstract	2
2.0	References	2
3.0	Test Items	2
4.0	Test Date and Location	2
5.0	Test Description	2
6.0	Test Results	4
7.0	Comments	8
8.0	Test Equipment	8

Illustrations		Page No.
Fig. I	Test Fixture	9
510359	Mounting Instructions	10

APPENDIX A

The Dayton T. Brown Report on the Seismic Test Program Performed on One CPC1 and One CPC2 Report No. DTB04R80-0479, Revision A.

Enclosures

E1	Seismic Test and Results
E2	Photographs
E3	Seismic Test Procedure
E4	Test Axes Designation Sketch and Test Point Locations

APPENDIX B

The Devar EMI, Seismic and Environmental Qualification Test Procedure for Core Protection Calculator No. 1 and Core Protection Calculator No. 2.

1.0 ABSTRACT

The purpose of this report is to describe the electrical operation of one CPC 1 and one CPC 2 as measured before, during and after seismic testing.

2.0 REFERENCES

A. EMI, Seismic and Environmental Qualification Test Procedure, DEVAR Register N-46474

B. Dayton T. Brown Test Specification DTB 25P79-0285 Revision B

C. Dayton T. Brown Test Report DTB04R80-0479

3.0 TEST ITEMS

A. One (1) Core Protection Calculator No. 1 Serial No. 0030267

B. One (1) Core Protection Calculator No. 2 Serial No. 0030268

4.0 TEST DATE AND LOCATION

The test was performed on April 15, 1980 at the Dayton T. Brown Test Facility, Bohemia, New York.

5.0 TEST DESCRIPTION

5.1 The test items were mounted in the vibration fixture, one above the other, CPC 2 on the top. Each box was fastened to the fixture using four 1/4 - 20 x 5/8 binding head screws backed with flat washers. The backs of the test items were tied together using two 1/16 inch thick stainless steel plates (See Drawing No. 510359).

5.2 Electrical inputs were supplied to the calculators and DC voltage outputs were monitored at selected test points using a digital voltmeter. Output voltages were also monitored using a recording oscillograph in order that rapid changes in voltage such as spikes could be detected.

5.3 A continuity tester was placed between terminals 49 and 63 of CPC 2 in order to detect relay contact closure. The relays' contacts were opened and closed during seismic testing in order to assure proper operation.

5.4 The calculators were subjected to five operating basis earthquakes (OBE) and one safe-shutdown earthquake (SSE) with the excitation applied along the YZ axis (See Fig. 1). In order to retest the calculators with the excitation along the XZ axis, the test fixture was rotated 90° on the shake table. The calculators were resubjected to five operating-basis earthquakes and one safe-shutdown earthquake.

5.5 For a complete description of the Seismic Test, reference Enclosure 1 of Appendix A - The Dayton T. Brown Seismic Qualification Test Procedure on Two Core Protection Calculators (CPC1 and CPC2), Report No. DTB 25P79-0285 Rev. B.

5.6 For a complete description of the electrical operation of the calculators during the seismic testing, reference Appendix B - The Devar EMI, Seismic and Environmental Qualification Test Procedure.

6.0 TEST RESULTS

6.1 Base readings prior to seismic testing:

CPC 1		CPC 2	
Terminal	Base Reading	Terminal	Base Reading
4	.280	7	-11.437
11	-.002	16	- 2.981
23	7.532	21	5.399
29	2.948	28	5.799
45	-2.399	30	-.001
49	-1.783	55	3.977

6.2

Terminal Number	Test Reading	Deviation From Base	Terminal Number	Test Reading	Deviation From Base
	CPC1			CPC2	
OBE 1	YZ Axis				
4	.280	.000	7	−11.436	.001
11	-.002	.000	16	− 2.981	.000
23	7.532	.000	21	5.389	.010
29	2.948	.000	28	5.788	.011
45	−2.398	.001	30	.020	.021
49	−1.783	.000	55	3.977	.000
OBE 2	YZ Axis				
4	.280	.000	7	−11.436	.001
11	-.002	.000	16	− 2.981	.000
23	7.532	.000	21	5.400	.001
29	2.948	.000	28	5.799	.000
45	− 2.398	.001	30	-.001	.000
49	− 1.783	.000	55	3.978	.001
OBE 3	YZ Axis				
4	.280	.000	7	−11.436	.001
11	-.002	.000	16	− 2.981	.000
23	7.532	.000	21	5.400	.001
29	2.948	.000	28	5.799	.000
45	− 2.398	.001	30	-.001	.000
49	− 1.783	.000	55	3.978	.001
OBE 4	YZ Axis				
4	.280	.000	7	−11.437	.000
11	-.002	.000	16	−2.981	.000
23	7.532	.000	21	5.400	.001
29	2.948	.000	28	5.799	.000
45	−2.399	.000	30	-.001	.000
49	−1.783	.000	55	3.977	.000
OBE 5	YZ Axis				
4	.280	.000	7	−11.437	.000
11	-.002	.000	16	− 2.981	.000
23	7.531	.001	21	5.400	.001
29	2.948	.000	28	5.799	.000
45	−2.399	.000	30	-.001	.000
49	−1.784	.001	55	3.977	.000

Terminal Number	Test Reading	Deviation From Base	Terminal Number	Test Reading	Deviation From Base
	CPC1			CPC2	
SSE 1	YZ Axis				
4	.280	.000	7	−11.436	.001
11	-.002	.000	16	− 2.981	.000
23	7.532	.000	21	5.400	.001
29	-2.948	.000	28	5.799	.000
45	− 2.398	.001	30	-.001	.000
49	− 1.783	.000	55	3.977	.000
OBE 1	XZ Axis				
4	.280	.000	7	−11.437	.000
11	-.002	.000	16	− 2.981	.000
23	7.532	.000	21	5.400	.001
29	2.948	.000	28	5.799	.000
45	− 2.398	.001	30	-.001	.000
49	− 1.783	.000	55	3.977	.000
OBE 2	XZ Axis				
4	.279	.001	7	−11.437	.000
11	-.002	.000	16	− 2.981	.000
23	7.532	.000	21	5.399	.000
29	2.948	.000	28	5.799	.000
45	− 2.399	.001	30	-.001	.000
49	− 1.783	.000	55	3.977	.000
OBE 3	XZ Axis				
4	.279	.001	7	−11.437	.000
11	-.002	.000	16	− 2.981	.000
23	7.532	.000	21	5.400	.001
29	2.948	.000	28	5.799	.000
45	− 2.398	.001	30	-.001	.000
49	− 1.783	.000	55	3.977	.000
OBE 4	XZ Axis				
4	.280	.000	7	−11.437	.000
11	-.001	.001	16	− 2.981	.000
23	7.532	.000	21	5.400	.001
29	2.948	.000	28	5.799	.000
45	− 2.398	.001	30	-.001	.000
49	− 1.783	.000	55	3.977	.000

Terminal Number	Test Reading	Deviation From Base	Terminal Number	Test Reading	Deviation From Base
	CPC1			CPC2	
OBE 5	XZ Axis				
4	.280	.000	7	− 11.437	.000
11	-.002	.000	16	− 2.981	.000
23	7.532	.000	21	5.400	.001
29	2.948	.000	28	5.799	.000
45	− 2.398	.001	30	-.001	.000
49	− 1.783	.000	55	3.978	.001
SSE 1	XZ Axis				
4	.280	.000	7	− 11.437	.000
11	-.002	.000	16	− 2.981	.000
23	7.532	.000	21	5.400	.001
29	2.948	.000	28	5.799	.000
45	− 2.398	.001	30	-.001	.000
49	− 1.783	.000	55	3.977	.000

6.3 For detailed information on the physical response of the calculators to the Seismic testing, reference Appendix A - The Dayton T. Brown Report on the Seismic Test Program Performed on One CPC1 and One CPC2, Report Number DTB04R80-0479 Rev. A

6.3 The test voltages were continuously monitored during each shake using a recording oscillograph. Examination of the recordings revealed no spikes or other anomalies due to testing.

6.4 The relay contacts of CPC 2 were caused to open and close once during each shake. The relays continued to operate properly throughout the test.

7.0 COMMENTS

7.1 During the first shake (OBE 1, Y Z Axis), the voltage at Terminal 30 of CPC 2 jumped 21 millivolts from the base reading. The increase in voltage, however, was not due to seismic testing. It was found that switching on power to the recording oscillograph had caused the peak detector module to jump to a higher state. The reset button was depressed causing all readings to return to their base values. Seismic testing was continued without further incidence.

7.2 The Calculators, CPC1 and CPC2, having met the requirements for qualification of Seismic-Category 1 instrumentation, are now considered seismically qualified for use in nuclear generating stations.

8.0 TEST EQUIPMENT

8.1

Item:	Digital Voltmeter
Manufacturer:	Keithley
Model:	191
Serial Number:	17909
Last Cal. Date:	3/80
Cal. Due Date:	9/80

8.2

Item:	Oscillograph
Manufacturer:	Consolidated Electrodynamics
Model:	5-124
Serial Number:	ME 02905
Last Cal. Date:	4/14/80
Cal. Due Date:	Prior to using

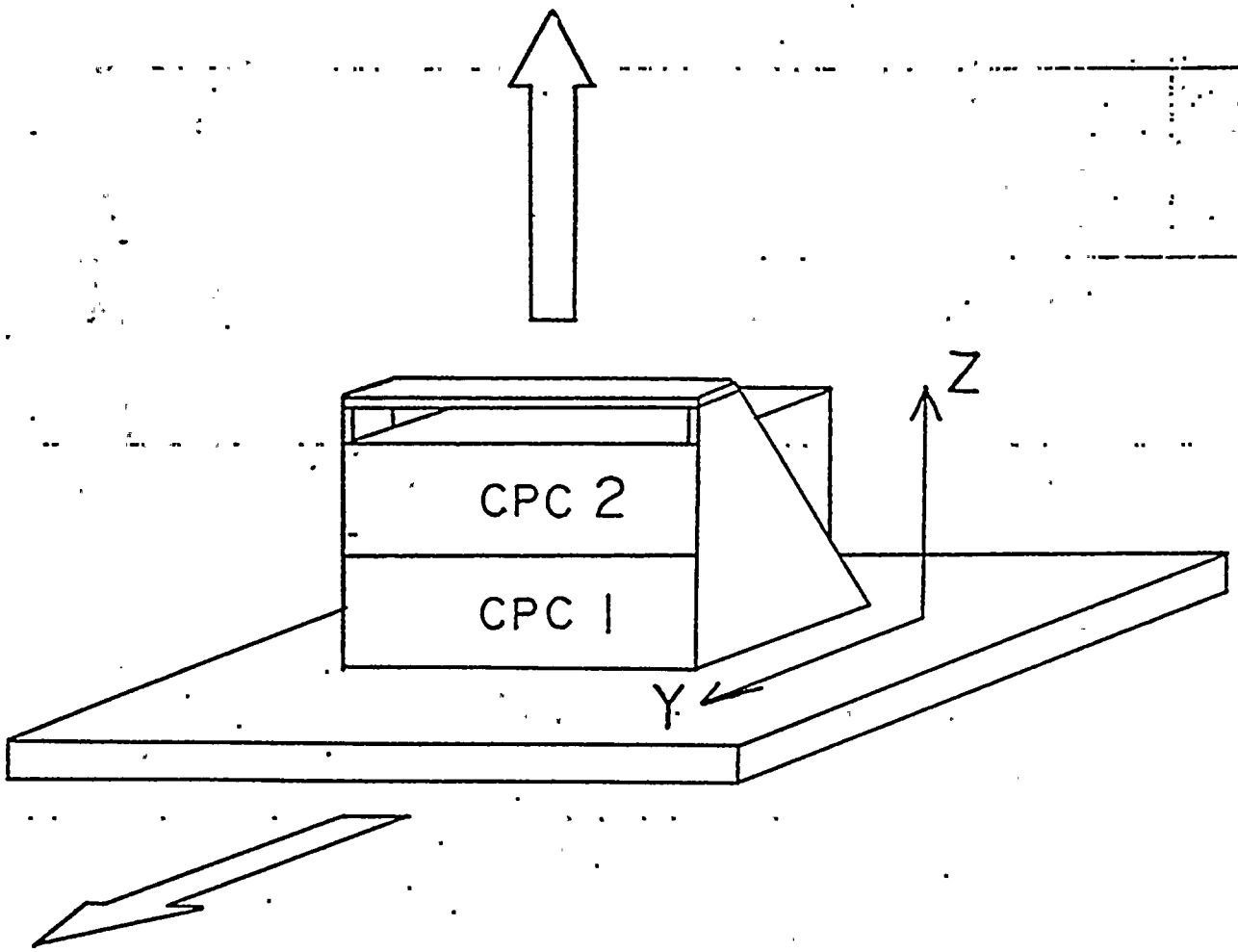

FIG. I Test fixture positioned for excitation along Y-Z axis. Rotate test fixture 90^{0} on table for excitation along X-Z axis..

DWG NO. 510359 SH

This drawing is the sole property of CONTROL PRODUCTS DIVISION of DEVAR Inc., and is submitted on the understanding that the contents hereof are not published and are not to be disclosed to third persons without permission.

REVISIONS			
REV	DESCRIPTION	DATE	APPROVED
A	RELEASE N-46474	3-18-80	[illegible]
B	ADD MTG. INSTR.	5-29-80	[illegible]

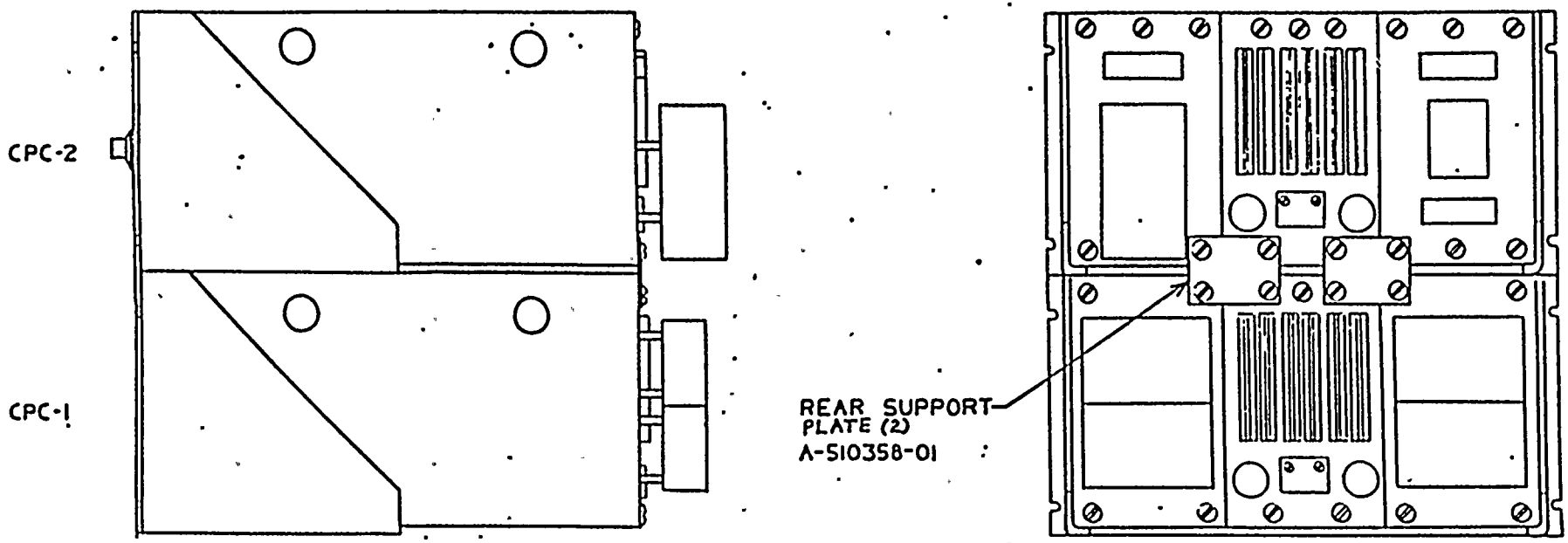

NOTE: TO MOUNT REAR SUPPORT PLATES USE (8) 10-32 × 1/2 ST. STEEL BINDING HEAD SCREWS PART NO. A-220617-49.

EACH CASE WILL BE MOUNTED USING FOUR 1/4-20X5/8 ST. STEEL BINDING HEAD SCREWS PART NO. 220617-55 AND FOUR FLAT WASHERS

TOLERANCES UNLESS SPECIFIED	CONTRACT NO.			DEVAR Inc. CONTROL PRODUCTS DIVISION
DECIMAL DIM ± .005; FRACT DIM ± 1/64; ANGLES ± 1/2°	PREPARED	D F	3-18-80	
MATERIAL	CHECKED	LFG	3-18-80	MOUNTING INSTRUCTIONS
	MECH			
	ELEC			
FINISH	DESIGN			
	APPROVED [illegible] 3-18-80			SIZE B; DRAWING NO. 510359; REV B
NEXT ASS'Y NO.	APPROVED			SCALE [illegible]; WT; SHEET 1 OF 1