REGULATORY INFORMATION DISTRIBUTION SYSTEM (RIDS)

ACCESSION NBR:8107280254 DOC.DATE: 81/07/20 NOTARIZED: NO DOCKET #
FACIL:50-335 St. Lucie Plant, Unit 1, Florida Power & Light Co. 05000335
AUTH.NAME AUTHOR AFFILIATION
UHRIG,R.E. Florida Power & Light Co.
RECIP.NAME RECIPIENT AFFILIATION
CLARK,R.A. Operating Reactors Branch 3

SUBJECT: Forwards responses to NRC 810521 request for addl info re auxiliary feedwater sys automatic initiation & flow indication. Four oversize drawings encl. Aperture cards will be available in PDR.

DISTRIBUTION CODE: A001S COPIES RECEIVED:LTR 3 ENCL 3 SIZE: 2244
TITLE: General Distribution for after Issuance of Operating License.

NOTES:

	RECIPIENT ID CODE/NAME		COPIES LTTR	COPIES ENCL	RECIPIENT ID CODE/NAME		COPIES LTTR	COPIES ENCL
ACTION:	OR8 #3 BC	04	13	13				
INTERNAL:	D/DIR,HUM FAC	08	1	1	DIR,DIV OF LIC		1	1
	I&E	06	2	2	NRC PDR	02	1	1
	OELD	11	1	0	OR ASSESS BR	10	1	0
	RAD ASMT BR		1	1	REG FILE	01	1	1
EXTERNAL:	ACRS	09	16	16	LPDR	03	1	1
	NSIC	05	1	1	NTIS		1	1

Drawings to: CF - 1
BC - 2

MA 4

JUL 31 1981

TOTAL NUMBER OF COPIES REQUIRED: LTTR 41 ENCL 39

P.O. BOX 529100 MIAMI, FL 33152

FLORIDA POWER & LIGHT COMPANY

July 20, 1981
L-81-302

Office of Nuclear Reactor Regulation
Attention: Mr. Robert A. Clark, Chief
Operating Reactors Branch #3
Division of Licensing
U. S. Nuclear Regulatory Commission
Washington, D. C. 20555

Dear Mr. Clark:

Re: St. Lucie Unit #1
Docket No. 50-335
Auxiliary Feedwater System
Automatic Initiation and Flow Indication

Florida Power & Light has reviewed the NRC letter dated May 21, 1981 concerning the above subject and our response is attached.

Very truly yours,

Robert E. Uhrig
Vice President
Advanced Systems & Technology

REU/PLP/ras

cc: Mr. J. P. O'Reilly, Region II
Harold F. Reis, Esquire

Aperture Card Dist.
Drawings To: CF-1
BC-2
Aool
S 5/3

REQUEST FOR ADDITIONAL INFORMATION

ST. LUCIE 1 AUXILIARY FEEDWATER (AFW) AUTOMATIC INITIATION AND FLOW INDICATION

Question 1

Please provide the following drawings:

a) Detailed P&ID (Piping and Instrumentation Diagram) of the St. Lucie 1 auxiliary feedwater system (AFWS).

b) Electrical schematics, and logic diagrams for the AFWS initiation and annunciation circuits, and AFW pump and valve control circuits.

c) Electrical schematics for the valves in the steam supply line to the turbine driven AFW pump.

Response 1

The drawings requested by the staff that are attached to this letter are preliminary. The finalized drawings along with the information that is not yet available will be sent to you when the design is finalized.

Drawings Numbers are as follows:

a) Ebasco Dwg No. 8770-G-080

b) Combustion Engineering Dwg No.
E-00000-411-801 Rev 01, AFAS Simplified Functional Diagram
E-00000-411-803 Rev 01, AFAS Testing System Diagram
E-00000-411-804 Rev 01, AFAS Miscellaneous Diagram

Schematics for actuated components with changes for Aux Feedwater Automatic Initiation System (CE) not available as of yet.

c) Not available as of yet.

Question 2

Assuming a loss of power to the AB-DC tie bus ("A" battery failure), describe the manual actions required to transfer this bus to the "B" battery - including the time required to make this transfer.

Response 2

Since the "AB" bus is normally aligned to the "B" battery at St. Luice Unit 1, the procedure to transfer the "AB" bus from the "B" battery to the "A" battery will be described. The only difference to transfer the "AB" bus from the "A" battery to the "B" battery would be a change in the breaker numbers.

1. Check the 1A charger on the 1A 125V DC bus, the 1B charger on the 1B 125V DC bus, and the AB charger is in Hot Standby.

2. Close Breaker 60317 ("AB" Battery Charger Output).

3. Open Breaker 60316, tie to 125V DC bus 1B on 125V DC bus 1AB from the control room.

4. Open Breaker 60230, tie to 125V DC bus 1AB on 125V DC bus 1B from the control room.

5. Close Breaker 60130, tie to 125V DC bus 1AB on 125V DC bus 1A from the control room.

6. Close Breaker 60315, tie to 125V DC bus 1A on 125V DC bus 1AB from the control room.

The time required to carry out this procedure is approximately two to five minutes.

Question 3

By Florida Power and Light (FP&L) letter dated January 2, 1981 (L-81-4), Enclosure 2, it is stated that "The AFWS will automatically terminate auxiliary feedwater flow to a faulted steam generator and automatically provide auxiliary feedwater flow to the intact steam generator." Provide a detailed description of this feature (i.e., automatic termination of AFW to the faulted steam generator) including logic and schematic electrical diagrams.

Response 3

The auxiliary feedwater actuation system automatically initiates auxiliary feedwater to the intact steam generator upon demand and terminates or prevents auxiliary feedwater to the steam generator identified as being ruptured. The AFAS is a four channel IE system that provides separate feedwater initiation signals for each steam generator (identified as AFAS-1 and AFAS-2). Both signals are provided in each channel to interface with the individual components (pumps, valves).

The logic which is used within each channel to define feedwater initiation or termination is shown in figure 1.AFAS is initiated within each channel upon receipt of a low S.G. water level signal provided the steam generator or associated feedwater header is not identified as being ruptured. A rupture signal is generated upon the following conditions:

- S. G. pressure is approximately 100 psi below the other S.G.; or
- Feedwater supply header pressure is approximately 100 psi below the other feedwater supply header pressure; and
- Its associated S.G. is identified as having a low water level, and
- The other S.G. or feedwater header is not identified as being ruptured.

The logic discussed above produces a digital (on/off) signal within each channel for AFAS 1 and 2. These signals are combined across the four channels to form a two-out-of four logic. This logic produces an AFAS 1 or 2 actuation signal within each channel to control the pumps or valves associated with that signal. Therefore, initiation of AFAS 1 or 2 will cause the final AFAS actuation relays to deenergize thereby energizing

Figure 1
AFAS LOGIC

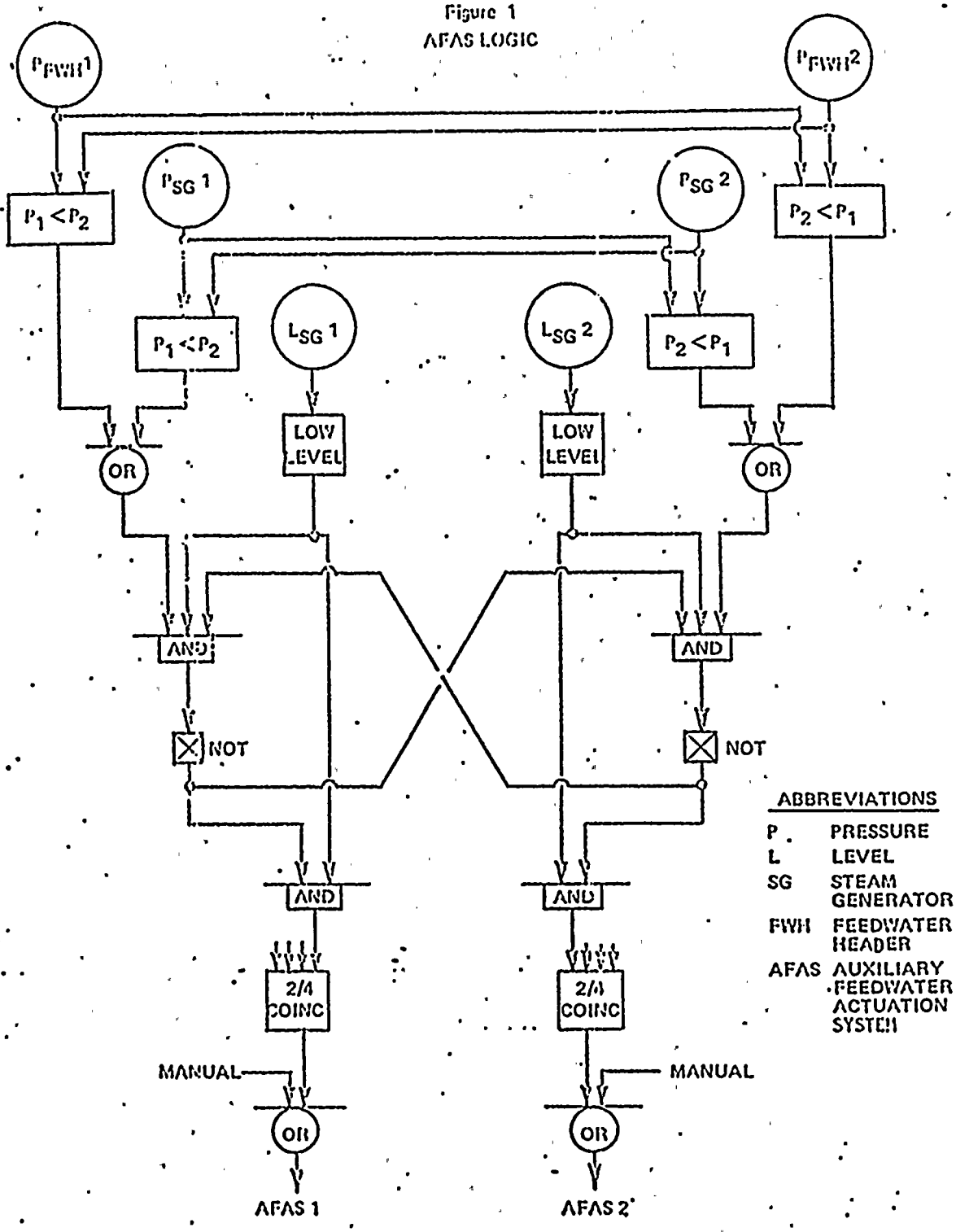

the associated pumps and valves to provide feedwater to the appropriate S.G. Should the S.G. be identified as being ruptured, the AFAS actuation relays would reenergize (except pump actuation relays) and close the associated valves. For further detail of the above project, see CE drawing E-00000-411-801 (attached).

Question 4

Are there any operating bypasses associated with the AFW automatic initiation logic/circuitry during start-up or operation of the reactor? If so, how are these bypasses removed (automatically, procedurally, etc)?

Response 4

The AFAS contains two types of bypasses, 1) trip channel bypass and 2) battery failure bypass. The trip channel bypass is provided for periodic testing of the system and to remove a channel from service due to a component failure. This bypass is manually initiated and manually removed. 2) The battery failure bypass is an automatic bypass initiated upon loss of battery power. The bypass effects only channels A and B. Loss of battery A will automatically bypass channel A only and similarly loss of battery B will automatically bypass channel B only.

Individual manual bypass switches will be provided on a functional level (AFAS 1 and AFAS 2) which will prevent the individual automatic actuation outputs from operating AFW system components (i.e. AFAS 1A bypass (S.G. 1A, channel A), AFAS 2B (bypass (S.G. 1B, channel B) etc.). A control room annunciator will be actuated when any of the available bypass switches is put in the bypass position. These bypasses will be removed manually under the direction of written procedures.

Question 5

Discuss the capability for testing and calibration of the AFW automatic initiation channels including intervals between tests.

Response 5

Testing of the auxiliary feedwater actuation system is accomplished in five segments:

1) Sensor Test
2) Bistable Test
3) Logic Matrix Test
4) Initiation Circuit Test
5) Actuation Test

Each test is discussed below:

1) Sensor Test

During reactor operation, the measurement channels providing an input to the AFAS are checked by comparing the outputs of similar channels and cross-checking with related measurements.

During extended shutdown periods or refueling, these measurement channels are checked and where possible calibrated against known standards.

2) Bistable Test

Testing of the bistable is accomplished by manually varying the input signal up to or down to the trip setpoint level on one bistable at a time and observing the trip action.

Varying the input signal is accomplished by means of a trip test circuit consisting of a digital voltmeter and a test circuit used to vary the magnitude of the signal supplied by the measurement channel to the trip input. The trip test circuit is interlocked electrically so that it can be used in only one channel at a time. A switch is provided to select the measurement channel, and a push-button is provided to apply the test signal. The digital voltmeter indicates the value of the test signal. Trip action (deenergizing) of each of the bistable relays is indicated by individual lights on the front of the cabinet, indicating that these relays operate as required for a bistable trip condition.

When one of the bistables of the AFAS is in the tripped condition, a channel trip exists and is annunciated. In this condition, auxiliary feed would take place only upon receipt of a AFAS 1 or AFAS 2 trip signal in one of the other like trip channels. The AFAS 1 or AFAS 2 trip channel under test is therefore bypassed for this test. Full protection is maintained.

3) Logic Matrix Test

The test is carried out to verify proper operation of the six logic matrices, any of which can initiate a system actuation.

Only the matrix relays in one of the six logic matrices can be held in the energized position during tests. If, for example, the AB logic matrix hold pushbutton is depressed, actuation of the other matrix hold push-buttons can have no effect upon their respective logic matrices.

Actuation of the pushbutton applies a test voltage to the test system hold coils of the selected double coil matrix relays. This voltage provides the power necessary to hold the relays in their energized position when deactuation of the bistable relay contacts in the matrix ladder being tested causes deenergization of the primary matrix relay coils.

The logic matrix to be tested is selected using the System Select switch. While holding the matrix Hold pushbutton in its actuated position, rotation of the System Select switch releases only those bistable relays that have operating contacts in the logic matrix under test. The System Select switch applies a test voltage of opposite polarity to the bistable relay test coils, so that the magnetic flux generated by these coils opposes that of the primary coil of the relay. The resulting flux will be zero, and the relays will release. A simplified diagram of this testing system is shown on C-E drawing E-00000-411-803. (attached).

Trip action can be observed by illumination of the bistable relay indicators located on the front panel of the AFAS cabinet and by loss of voltage to

the four matrix relays, which is indicated by extinguishing indicator lights connected across each matrix relay coil.

During this test, the matrix relay "hold" lights remain on, indicating that a test voltage has been applied to the holding coils of the matrix relays of the logic matrix module under test.

The test is repeated for all six matrices. This test verifies that the bistable relay contacts operate correctly and that the logic matrix relays will deenergize if the matrix continuity is violated. The opening of the matrix relay contact is tested in the initiation circuit test.

4) Initiation Circuit Test

Each initiation circuit is tested individually by depressing a matrix Hold pushbutton (holding matrix relays), selecting either system position on the System Select switch (opening the matrix), and selecting a matrix relay on the Matrix Relay Select Switch (deenergizing one of the matrix relays).

This causes one, and only one, of the initiation circuits to deenergize, causing one current leg of the selective two-out-of-four in each channel to open. Loss of current through this leg is indicated on the AFAS cabinet.

The Matrix Relay Select Switch is turned to the next position, reenergizing the tested matrix relay, allowing the initiation circuit to reenergize.

This sequence is repeated for the remaining three initiation circuits from the selected matrix. Following this, the entire sequence is repeated for the remaining five matrices.

5) Actuation Test

Proper operation of the AFAS relays in the AFAS Cabinet, is verified by deenergizing the relays one at a time via a test relay contact and noting the proper operation of all actuated components in that trip function (ASAS-1 or AFAS-2). The relay will automatically reenergize and return its components to the pretest condition when the test pushbutton is released.

The design of the test system is such that only one relay may be deenergized at a time. The test switch must be positioned to the function relays (AFAS 1 or AFAS 2) to be tested, selection of more than one function is impossible. The test circuit is electrically locked out upon actuation of a particular AFAS function.

Testing of segments 2 thru 5 of the AFAS should be accomplished at intervals similar to the RPS.

Question 6

Address the physical separation provided between the redundant AFW automatic initiation instrument channels.

Response 6

The AFAS cabinet is divided into front and back compartments separated by a mechanical barrier at the 30" depth point. Additional thermal and mechanical barriers in the horizontal and vertical planes at the cabinet centerline divide the cabinet into eight separate compartments.

The front four compartments contain the initiation circuitry (bistables, logic, and test circuitry) for channels A, B, C and D respectively as well as the interchannel isolation devices to another. Access to each front compartment is controlled by a separate transparent door with a key switch. Where cables of one compartment must pass through to another an enclosed cable duct (qualified as a fire barrier) is utilized. The four rear compartments contain the actuation circuitry and devices that are required for control of the AFAS System. Each compartment has a separate door for access.

Where existing plant instrumentation signals (e.g., Steam Generator level and pressure) are to be used by the AFAS initiation system, the extension of these loops to the AFAS cabinet will be installed with appropriate separation consistent with the existing loop installations. New dedicated instrumentation signals (e.g., Feedwater header pressure) will be installed with separation consistent with existing plant separation criteria. System outputs and operator interface devices (switches) will also be installed in accordance with existing plant separation criteria.

Question 7

Describe the auxiliary feedwater flow indication instrumentation at the St. Lucie plant. This description should include:

a. Type and number of flow channels.

b. The specific source (vital bus) from which these channels are powered.

c. Capability for testing and calibration including the interval between tests.

d. The type of indication available in the control room for each channel (indicator, recorder, etc.)

e. Safety grade qualification of the flow channels.

f. Accuracy of the flow channels.

Response 7

a. St. Lucie 1 has three auxiliary feedwater pumps. Each pump with its associated flow path controls and instrumentation represents separate channel. Header discharge flow for each channel is indicated on Reactor-Turbine-Generator Board (RTGB) and recorded on Post Accident Panels A and B (PAP). The channels are designated as IA, IB, IAB (important A, B or AB). Each channel runs in separate tray system.

b. Each flow instrumentation channel is powered from safety related source. Channel IA is powered from vital bus SA, channel IB from SB and channel IAB from SAB. Vital bus SA, SB takes power from offsite source and is backed-up by Emergency Diesel Generator. Vital bus SAB takes power either from vital bus SA or SB.

c. One point pressure check is conducted once a month and response of the instruments is observed.

   Instruments are calibrated during each scheduled refueling outage. Scheduled outages occur at intervals of twelve to eighteen months. All instruments in the loop are also recalibrated every time there is a malfunction or a problem in the loop.

d. One flow indicator per each channel is mounted on RTGB. Also each channel has flow recorder mounted of PAP. Channel IA and IAB are mounted on PAP "A" and Channel IB is mounted on PAP "B".

e. Flow instrumentation channels are seismically qualified. This includes transmitters as well as equipment mounted on RTGB and PAP. Flow instrumentation equipment mounted on RTGB or PAP is located on non-safety portion of the board. There is no tracability of materials for auxiliary feedwater flow instrumentation.

f. Flow transmitters accuracy is .5% at ambient temperatures. Accuracy of each component in the loop except precision resistors is .5%. Accuracy of precision resistor is 0.01%. The component of the loop which has accuracy higher than 0.5% is rejected. Overall accuracy of each flow loop is typically 0.7%.

Question 8

Describe the steam generator level instrumentation at the St. Lucie plant. This description should include:

a. Type and number of level channels per steam generator including the range for each channel.

b. The specific source (vital bus) from which each of these channels is powered.

c. Capability for testing and calibration including the interval between tests.

d. The specific indication available in the control room for each channel (indicator, recorder, etc.).

Response 8

Steam Generator Level Instrumentation is used to effect reactor trip, automatically initiate Auxiliary Feedwater System to the intact steam generator and to monitor steam generator level during the course of an accident. Steam generator level instrumentation is classified into safety

related and non-safety instrumentation.

a. The safety related instrumentation is divided into four safety related protective channels. The channels are designated MA, MB, MC and MD. Each steam generator has four level transmitters representing four protective channels. Protective channels are narrow range type and are primarily used to initiate reactor trip and initiate auxiliary feedwater to the intact steam generator. Low steam generator level signal will trip the reactor when measured steam generator level falls to a low preset value. The logic is such that the coincidence of two out of four low level signals in either steam generator will effect reactor trip. The same level transmitters which trip the reactor provide an input to Auxiliary Feedwater Initiation System. The logic is such that the coincidence of two out of four low level signals in either steam generator will initiate auxiliary feedwater flow to the intact steam generator. All components of protective channels are Class 1E. Each protective channel is independent and separate from each other. Cables of the same measured parameter run in separate conduit or tray system. Instrumentation of the same protective channel mounted on RTGB or PAP is isolated from other channels and non-safety equipment by fireproof barrier.

Transmitter ranges for protective channels are as follows:

SG	Tag No.	Transm Range
1	LT-9013A	0-131.8" WC
1	LT-9013B	0-132.1" WC
1	LT-9013C	0-131.8" WC
1	LT-9013D	0-131.7" WC
2	LT-9023A	0-131.7" WC
2	LT-9023B	0-131.8" WC
2	LT-9023C	0-131.8" WC
2	LT-9023D	0-131.8" WC

In addition to four protective channels each steam generator is equipped with one wide range non-safety channel for indication and recording. These transmitters are Seismic Class 1.

Transmitter ranges for wide range transmitters are as follows:

SG	Tag No.	Range
1	LT-9012	483.8" WC - 21.2" WC
2	LT-9022	482.6" WC - 20.1" WC

Third group of SG level transmitters are part of Feedwater Regulating System. Two non-safety Seismic Class 1 transmitters are provided for each SG.

These narrow range transmitters provide input to the feedwater regulating systems and drive indicating controllers and recorders mounted on RTGB.

These transmitter ranges are as follows:

SG	Tag No.	Range
1	LT-9005	61.2" WC - 192.9" WC
2	LT-9006	63.7" WC - 195.5" WC
1	LT-9011	193.4" WC - 61.6" WC
2	LT-9021	198.7" WC - 61.7" WC

b. Each protective channel is powered from 120VAC class 1E uninterruptible power supply of the same channel. Power supplies of channels MA and MC are powered from Battery A while channel MB and MD are powered from Battery B. Each channel is powered through an inverter. Power supply of the same channel is isolated from non-safety and safety related equipment of another channel.

c. Safety related instrumentation is calibrated during:

1 - Shutdown

2 - Scheduled refueling outage

3 - When malfunction or a problem occurs in the loop.

Each scheduled outage occurs at time intervals of twelve to eighteen months.

As mentioned earlier accuracy of each component in the loop except precision resistor is 0.5%. Precision resistor accuracy is .01%. Component is rejected if its accuracy exceeds .5% during calibration. Overall accuracy of each SG safety related instrumentation loop is typically .7%. Similarily calibration and accuracy requirements will also apply to non-safety instrumentation.

Overall accuracy will vary slightly depending how many components are in the loop. Typically there are between four or five components in the loop. Overall accuracy is computed using Square Root of the Sum of the Squares (SRSS) method.

d. For narrow range safety related instrumentation four channels of indicating controllers per SG are mounted on RTGB (total of 8). Also channel MA for SG 1 and SG 2 is recorded on PAP A.

For non-safety wide range level instrumentation one indicator per SG is located on RTGB and HSCP. One two-pen recorder mounted on PAP, records channel MA of SG1 and SG2 level. For non-safety narrow range SG level instrumentation used for Feedwater Regulating Systems one level indicating controller per SG is provided on RTGB. Also one two-pen recorder for recording SG1 and SG2 level is located on PAP "A".