File Copy (Suppl)

DOCKET NO. 50-249

Trans w/ 5-16 + 17-66 ltrs.

DRESDEN NUCLEAR POWER STATION

UNIT 3

PLANT DESIGN AND ANALYSIS REPORT

AMENDMENT NO. 2
ANSWERS TO AEC QUESTIONS

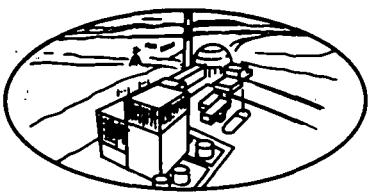

Commonwealth Edison Company

1463
1426

QUESTION #1

Please clarify the basis for the data given in Figure D5-1 of Amendment No. 1 below the energy range of 200 calories per gram since these data points cannot be found in your stated references.

ANSWER

1. The basis for the data given in Figure D5-1 of Amendment No. 1 below the energy range of 200 cal/gm. was ANL-6925[1] for the Zr-2 clad and unclad data points not superscripted by an asterisk. For the KIWI-TNT test data, which are superscripted by asterisks, the reference is ANL-7055[2].

---

(1) Baker, L. Jr., and Tevelbaugh, A.D., "Chemical Engineering Division Report, July-December, 1964, Section V - Reactor Safety," ANL-6925.

(2) Baker, L., Jr., and Tevebaugh, A. D., "Chemical Engineering Division Report, January-June, 1965, Section V - Reactor Safety," ANL-7055.

QUESTION #2

If one postulate that the withdrawal of two rods simultaneous with a failure of the rod block function is incredible as indicated in question D8-1 of Amendment No. 1, then a rod block function failure coincident with a continuous single rod withdrawal at power must be considered. Please provide this analysis and state the extent and consequences of fuel damage that could occur before the reactor scram to terminate the transient.

ANSWER

The incident consisting of the erroneous withdrawal of a control rod has been defined to test the adequacy of the core nuclear instrumentation. It is a design basis accident related to instrument design and location and the maintenance of fuel integrity in such a case is a matter of economic, rather than safety, concern.

In more than ten reactor years of BWR operating experience, the postulated incident has never occurred. Nevertheless, with the advent of the all-in-core instrumentation system, it was necessary to define a design basis for sensor placement and output averaging. This basis was that, starting from the worst permitted steady state rated power operating point, the protection system should prevent fuel damage if the operator should erroneously withdraw the rod adjacent to the limiting region of the core. Satisfaction of this requirement assures, with margin, that there would be no fuel damage in the case of the more probable, less severe errors that human operators are likely to make.

The more general design basis for the reactor protection system is that fuel damage is prevented in a reactivity insertion accident resulting from a single equipment malfunction or single operator error. However, a combination of more than one independent equipment malfunction, more than one operator error, or a combination of the above may result in fuel damage.

The probability of an operator error leading to fuel damage is extremely low. This is illustrated by the following sequence of events:

1. Normal rated power starting point.
2. Operator changes to unauthorized configuration - 1st error.
3. Operator pulls strongest rod slowly - 2nd error.
4. Rod block fails - 1st malfunction.
5. Operator ignores LPRM alarms and continues rod withdrawal - 3rd error.
6. Fuel damage may result.

Thus, the incident consists of three operator errors and one equipment malfunction occurring over a time period of many minutes.

The worst end point of the above sequence of events, with the control rod in question fully withdrawn is a steady state reactor condition with power about 10% above rated and 228 fuel rods with MCHFR less than 1.0 relative to the limits of APED-3892. Of course, most of the 228 rods would not be expected to fail; nevertheless, for purposes of analyzing the worst possible case consequences, it is assumed that all will fail. In this case, no scram occurs because the withdrawal is assumed to occur so slowly that there is no appreciable neutron flux overshoot. The final steady neutron flux is not high enough to produce scram level trips on two APRM channels as would be required to scram control rods.

There would be an increase in both the units off-gas monitor and the total effluent being discharged from the unit 2 and 3 stack. Corrective actions would be taken to maintain the stack release limits as set forth in Dresden Unit 1 Facility License DPR-2.

QUESTION #3

Please discuss the effects or the consequences of reactivity transients relating to rod drop and rod ejection accident analysis if one were to conservatively assume the cumulative effects of uncertainty in determining reactivity feedback.

ANSWER

A technical memorandum pertaining to this topic is currently being prepared by the General Electric Company, but it is not yet complete. In response to the above question, the applicant will present an oral discussion of the uncertainty analysis to the Staff and to the ACRS if appropriate at the next scheduled meeting with the AEC. The technical memorandum will be transmitted to the AEC at the earliest practical date.

QUESTION #4

In your response to question D-2-C of Amendment No. 1 please clarify the basis for indicating that "the containment structure would probably retain its integrity at even 2-1/2 times its design pressure and that the primary vessel heated an additional 500°F due to the exposure to the hot core". Does this include consideration of a simultaneous loading from the design earthquake?

ANSWER

In response to question D-2-C of Amendment No. 1 detailed documentation was provided with respect to the bases of the assumptions and model used to obtain the containment capability curve. As part of that documentation the considerable degree of conservatism involved was emphasized by the various assumptions involved in the generation of a capability curve. For instance, containment structural integrity was based on complete satisfaction of ASME Section III stress requirements; heat losses from the entire containment structure for the duration of the accident event (0 to 2 hrs.) were set equal to zero; the pressure vessel was not assumed to heat up even though the reactor internals were heating up to melting temperatures; cooling water was taken to be at its maximum possible temperature.

In order to demonstrate the extent of conservatism incorporated in the generation of the design capability curve, an expected capability curve was also generated. This "expected capability curve" is an attempt to indicate the best estimate of the containment capability to withstand the addition of mass and energy without failure.

For this expected capability curve satisfaction of ASME Section III is not the criteria, but rather failure of the structure itself becomes the criteria. In order to satisfy ASME Section III membrane stresses must be below 0.275 of the ultimate strength of the material. This means that although the vessel could be expected to begin plastic deformation at a pressure of general yielding, membrane bursting would not be expected until pressure levels were 3.64 times ASME Section III allowable pressure levels. If ideal reinforcement is provided for all discontinuities in the containment, the 3.64 bursting pressure factor could be realized; however, the practicalities of attaining such uniform reinforcement are such that local cracking would occur before membrane bursting. For this reason it is estimated that a pressure level of 2 or 3 times allowable pressure could cause some local cracking in the containment. Therefore, for the generation of an expected containment capability a pressure level of 2.5 times allowable rather than 3.64 was employed.

Another major influence on the generation of the capability curve is the extent of sensible heat storage in structures. For instance, for every 100°F additional heat-up of the reactor pressure vessel over ten million BTU's are absorbed. In the generation of the design basis containment capability curve, no credit for vessel heat-up was included. The basis for not including vessel heat-up credit was that such energy storage could not be adequately analytically defended to justify its inclusion in a design basis

determination. However, the hypothetical accident being analyzed does include the complete melt out of the entire reactor core - fuel rods and channel boxes. Our best estimate of the behavior of the pressure vessel metal which surrounds the core is that it would experience a considerable heat-up. The melting point of the zirconium cladding is over 3300°F. However, for the estimated containment capability curve, it was assumed that just a 500°F heat-up of the vessel metal would occur. The heat-up would probably be much greater if a full core melt ever occurred; however, this increment of heat-up is sufficient to demonstrate the estimated capability of the containment.

In conclusion, it should be stated that it is intended to continue to use the design capability curve as a very conservative measure of containment capability. However, partly because of the nature of the various hypothetical accidents being considered and partly because of the repeated requests for estimates of the degree of conservatism or margins in design, it was considered that a reasonable estimate of containment capability introducing two factors of several not accounted for in the design capability curve would serve a useful purpose.

QUESTION #5

In regard to the design of the shared containment spray system, please clarify the location of the valve and the design bases used to evaluate the adequacy of single valves in critical piping systems. Also, clarify the protective features provided against a rupture in a crossover line that could lead to a loss of suppression pool water. We believe that when this system is required to function, no single failure should preclude system operation. The proposed design appears to be deficient in this regard and that criterion 18 does not appear to be satisfied. Your comments on these considerations are invited.

ANSWER

It is the applicant's position that the proposed design of the containment cooling system for Dresden Units 2 and 3 meet both the intent and the letter of criterion 18, because (a) two completely redundant systems are provided for containment cooling for each Unit, (b) each system, though of different designs, has approximately the same degree of reliability, (c) rigid specifications are adhered to for the containment cooling piping, and (d) the design layout has been selected to minimize the length of both discharge and suction lines of the shared system and the exposure to missile hazards.

(a) Criterion 18 is satisfied

Criterion 18 requires that "at least two independent systems" must be provided "for the removal of heat from within the containment structure as necessary to maintain the integrity of structure under the conditions described in Criterion 17." The proposed Design provides two independent containment cooling systems for each Unit 2 and 3, and each system has the adequate heat removal capacity to maintain the integrity of the containment structure. Thus, the intent of Criterion 18 is satisfied.

The heat removal capacity provided in the design is not dependent upon a single valve, but rather upon two independent redundant cooling systems. There is nothing in Criterion 18 which infers that redundancy in valves or other components of each system is required.

(b) Design reliability has been established.

The design bases for evaluating the reliability of the containment cooling system has been that the system shall function properly 999 times in 1000 operations. This is an attainable design basis which can be met with commercially available equipment since the system is engineered based upon the need for high reliability.

Using these design bases, the containment cooling systems for Dresden Units 2 and 3 were evaluated and found to be successful 6249 times in 6250 system operations. This meets the above criteria. The system was also analyzed during the design based on providing redundancy for all normally closed valves which must operate to put the system into operation. It was found that this system would be successful 14,999 times in every 15,000 operations. A comparison was made of the performance of the proposed system with that of the design submitted for Dresden 2. Dresden 2 design was found to be successful 20,999 times in 21,000 system operations. At the time, the design decision was made that we had maintained the high reliability of the system that we have set for ourselves. A re-evaluation of this position serves as the basis for the conclusion that the initial decision was correct and changes in the design are not justified.

In any such evaluation, the important concern is consistency of analysis so that comparisons can be made between different designs and proper selections made. It is also important to determine the level of improvement which is considered of enough significance to warrant a change in system design. There is enough variation in the magnitude of reliability numbers assigned to all components in such a study that an order of magnitude variation should be used as a guide to determine that systems changes are warranted. Based upon these assumptions, the systems discussed above are assumed to be comparable in performance although there is relative improvement in reliability from one system to the other.

Redundancy can be provided in several alternate ways and as stated above, the reliability of alternate designs are comparable. It is understandable that the designs compared do not vary greatly in reliability because the basic concept of the system in all alternate designs has been one of simplicity to accomplish the design bases. Because of the system simplicity and therefore high reliability, variations to the design bring about small changes in system reliability.

(c) Rigid specifications have been applied

The cross-tie is designed and constructed to meet the same code requirements as the other piping in the containment cooling system and will meet the same rigid requirements for field installation as will the containment. The short length of pipe is considered part of the containment as are the other pipes in this system and is considered to have the same integrity of the containment.

(d) Reliability is enhanced by design layout

The valves in the cross-tie lines which tie the spare system to either reactor are located so that those valves (suction and discharge) associated with Unit 2 are located in the southwest corner of Unit 2 at the 476'-6" elevation (Figure 8 of the PD & AR) and those valves associated with Unit 3 are located in the southeast corner of Unit 3. The suction tie line is approximately 30 feet in length, and passes through the common wall between the two reactor buildings. The proposed routing of this line, as with all safeguards lines, has been selected with care taking into account other pipes, potential missiles, etc. The discharge cross-tie is designed with the same considerations as the suction line but is longer by a few feet. Reviews will be continued during the design phase to insure that the high integrity of the design of these lines is maintained.

The above design and arrangements considerations provide the cross-over pipe with adequate protection.

QUESTION # 6

Please clarify the following interrelationships between the units of the Dresden Power Station caused by the station electrical system:
One 4.16 KV auxiliary power bus in Unit 2 and one in Unit 3 are interconnected to the 34.5 KV standby power source which is connected to the standby power system of Unit 1 and the 138 KV station bus. The 4.16 KV swing bus that provides power for the containment cooling system shared by Unit 2 and by Unit 3 is connected to one 4.16 auxiliary power bus in Unit 2 and one in Unit 3. Considering that the diesel generators for Unit 2 and for Unit 3 (which are the primary emergency power sources) can make connections to the 4.16 KV emergency power buses in the other unit, please clarify the bases which would lead to the conclusion that emergency and standby power sources for all three units are truly separable and that these interconnections in the station electrical system do not provide an adverse interaction between units during normal and abnormal modes of operation in the station.

ANSWER

1. The 4.16 KV swing bus can only be energized from one source at a time. This is accomplished by means of interlocks on the two supply circuit breakers which prevent closing of either breaker when the other is closed. This method of interlocking will prevent the interconnection of the auxiliary power systems of Dresden, Units 2 and 3.

2. In the accompanying sketch, the circuit breakers marked "A" open automatically upon loss of bus voltage by means of bus under voltage relays. When the circuit breakers marked "B" are closed to energize the auxiliary power buses from the diesel engine generators, all other power source circuit breakers will be open preventing the diesel engine generators from backfeeding into the other sections of the auxiliary power systems.

3. The design of the swing bus interlocks has not yet been finalized. However, interlocks of the electrical type employing auxiliary contacts on the breakers will probably be used. It has been found that interlocks of this type are very reliable and require little maintenance.

   The A breakers (Figure 6-1) fed from transformer 23 to buses 23-1 and 24-1 will have closing feed through the (b) contacts of the A breakers in series of transformer 23 to buses 34-1 and 33-1 to prevent transformer 23 from being closed to Dresden 2 auxiliary buses if either breaker of transformer 23 to Dresden 3 auxiliary buses is closed. Likewise the closing feeds of the A breakers of

transformer 23 to buses 34-1 and 33-1 will be through (b) contacts of transformer No. 23 breakers to Dresden 2 auxiliary buses.

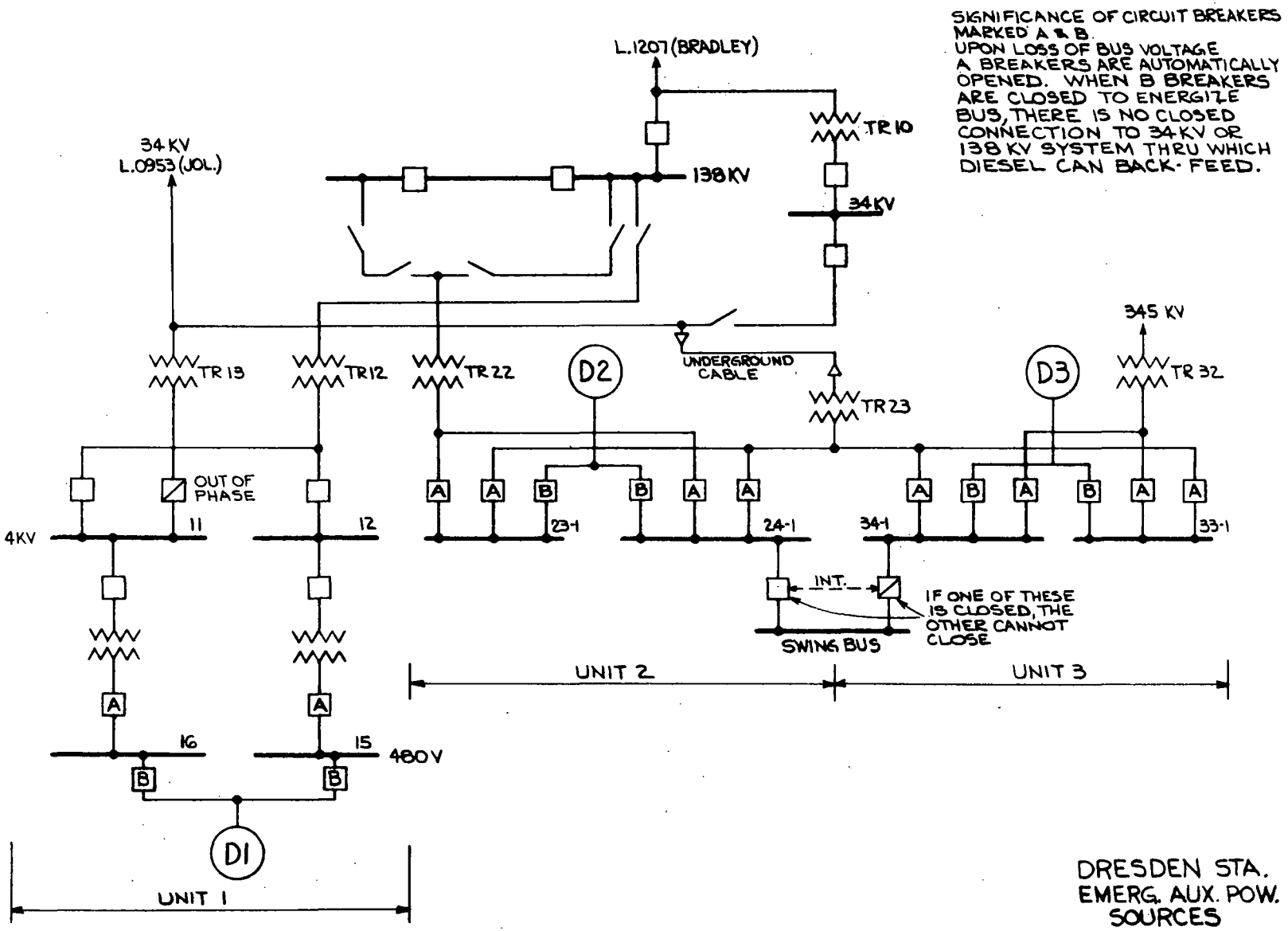

DRESDEN STA.
EMERG. AUX. POW.
SOURCES

5-13-66 FIG. 6-1

QUESTION #7

Please identify and discuss the safety aspects of the changes made to the station ventilation system as indicated in revised Figure 36.

ANSWER

7. The changes listed below were made to the ventilation drawing. Some of the changes are to add clarity to the original drawing and some were to correct errors shown on the drawing. The basic concept of the drawing has not been changed.

A. Those changes made for clarification are as follows:

1. The basic flow of the stack monitoring system has been added for clarity. The radiation monitor symbol has been included with the stack monitor.
2. The pressure suppression chamber to drywell vacuum breaker line is shown as required.
3. Partial ventilation from the turbine building is not routed to the vent pipe.
4. The lines from the drywell to the standby gas treatment system have been changed to connect with the drywell ventilation exhaust line for more accurate pictorial representation. The line also shows a reducing orifice which will keep the pressure drop across the gas treatment filters within the design pressure of the filters if this system is utilized for post incident recovery with the containment at elevated pressure.

   The suction line from the containment pressure suppression chamber is also changed to reflect the restriction orifice.
   Root valves and test taps are used to provide capability for leakage check of the isolation valve in the suction lines.

B. Those changes having safety significance are as follows:

1. The reactor building suction valves in the standby gas treatment suction have been changed from normally closed to normally open valves. The function of these valves is to be closed during incident recovery that requires venting of the drywell and pressure suppression chamber through the standby gas treatment system to minimize the potential diffusion of fission products into the reactor building through the normal ventilation system. Check valves were added downstream of the fans to prevent back flow through system when it is not in operation. The standby gas treatment system is

in the most reliable mode for venting the secondary containment.

2. Two radiation monitors are shown on the reactor building ventilation monitoring system. This is to provide redundnacy on these monitors.

QUESTION # 8

Information provided in response to question C 1-1 of Amendment No. 1 does not appear to be applicable or sufficient to conclude that the collet fingers are functionally and structurally adequate to prevent a rod ejection accident and further information be provided to eliminate the uncertainties of an analysis based on static tests and the extrapolation to the current design of test results reported in GECR 5089 on earlier design.

ANSWER

The inadequacy of conclusions drawn on static tests is recognized, and plans have been made to determine the behavior of the collet under impact loads experimentally. The impact loads will include those calculated to be the maximum under failure conditions. Test results will be published as soon as they are available, scheduled for July, 1966.

QUESTION # 9

Please discuss the consequences of tornado strength wind in relation to the storage and handling of reactor fuel.

ANSWER

In the event the reactor building were to be subjected to winds of tornado strength, no damage to the building structure would be expected. The structure consists of poured-in-place reinforced concrete exterior walls up to the refueling floor. However, the building superstructure above the refueling floor consists of steel frame with insulated metal siding. Tornado strength winds would be expected to damage the superstructure with the possibility of its removal from the remainder of the building.

The effects of these winds on the refueling pool and spent fuel storage pool are not clear at this time. In order for the tornado to suck significant amounts of water from these pools it would have to pass directly over them in a manner such that significant differential pressures exist across the pool surface. While some water might be expected to be blown from the pools as a result of wind effects it is difficult to visualize tornado activity over the pools which would result in suction-type "water spouts" sufficient to remove the quantity of water necessary to result in inadequate fuel cooling.

The spent fuel storage pool, the refueling pool, and the vessel internals storage pool are all interconnected with open flow paths between them during refueling operations (see Plant Design and Analysis Report, Volume II, Figures 3 and 4). The spent fuel storage pool contains about 3.4 million pounds of water, of which about 2.1 million pounds is above the bottom of the refueling slot between the spent fuel pooland the refueling well. The refueling well (to the vessel flange) and the vessel internals storage pool contain a total of about 3.9 million pounds of water, of which about 2.7 million pounds is above the interconnecting slots between the pools. Therefore, a total of about 4.8 million pounds of water is available to flow between the various pools since all of the pools are interconnected and will maintain the same level to the bottom of the slot interconnections.

In order to uncover fuel in the spent fuel storage pool the tornado would have to suck from the pool the 4.8 million pounds of water available for flow between pools plus about an additional 0.5 million pounds in the spent fuel pool between the bottom of the refueling slot and the top of the fuel. In order to uncover fuel in the reactor core, the tornado would have to suck from the pool the 4.8 million pounds of water available for flow between pools plus about an additional 1 million

pounds which must be sucked from the approximately 21 ft. diameter reactor vessel to expose the top of the fuel.

Literature searches into records of tornado effects and damage will be continued and the design reviewed for specific requirements. Records searched to date have contained no data to substantiate the suction of large amounts of water from pools, ponds or other small bodies of water.