DOCKET NO. 50-249

File Copy (Formal File)

submitted as a part of ltr + appl of 2-10-66.

DRESDEN NUCLEAR POWER STATION

UNIT 3

Also See Other Reports for Amendments

PLANT DESIGN AND ANALYSIS REPORT

VOLUME I

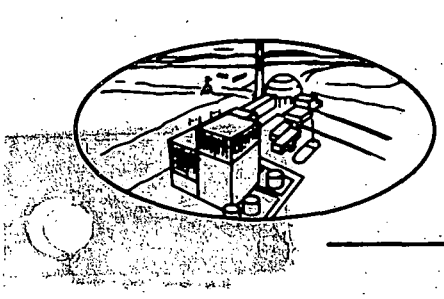

Commonwealth Edison Company

449-A

TABLE OF CONTENTS

TABLE OF CONTENTS (Continued)

TABLE OF CONTENTS (Continued)

LIST OF ILLUSTRATIONS IN VOLUME II

* Same as Unit 2 PDAR as Amended
‡ Conforming Amendment of Unit 2 PDAR as Required

LIST OF ILLUSTRATIONS IN VOLUME II (Continued)

* Same as Unit 2 PDAR as Amended
‡ Conforming Amendment of Unit ‡ PDAR as Required

LIST OF ILLUSTRATIONS IN VOLUME II (Continued)

* Same as Unit 2 PDAR as Amended
‡ Conforming Amendment of Unit 2 PDAR as Required

LIST OF ILLUSTRATIONS IN VOLUME II (Continued)

* Same as Unit 2 PDAR as Amended
‡ Conforming Amendment of Unit 2 PDAR as Required

I. INTRODUCTION AND SUMMARY

I. INTRODUCTION AND SUMMARY

1.0 PURPOSE AND SCOPE OF THIS REPORT

1.1 Introduction

This Plant Design and Analysis Report is submitted in support of the application of Commonwealth Edison Company for a construction permit and facility license for Unit 3 at its Dresden Nuclear Power Station at power levels up to approximately 2300 MWt under Section 104(b) of the Atomic Energy Act of 1954, as amended, and the regulations of the Atomic Energy Commision set forth in Part 50 of Title 10 of the Code of Federal Regulations (10 CFR 50).

The addition of Unit 3 at Commonwealth's Dresden Nuclear Power Station in consonant with the original plans for development of this 953-acre site which began with the construction of the orginal Dresden Nuclear Power plant, hereafter referrred to as Dresden Unit 1. Dresden Unit 2 is now under construction as authorized by CPPR-18, issued January 10, 1966 in AEC Docket 50-237; it is anticipated that construction of Unit 2 will be completed in early 1969. Construction of Unit 3 for net electrical power output of 715,000 kw is scheduled for completion in early 1970 in order to meet anticipated demands for power in Commonwealth's service area of Chicago and Northern Illinois.

To meet this requirement, General Electric has undertaken to furnish a complete nuclear power plant to be licensed for operation initially at power levels up to approximately 2300 MWt. To provide margins which will assure achievement of this objective, the plant, including all of its various components, is designed for ultimate operation at power levels of about 2600 MWt. However, authority to operate at power levels in excess of 2300 MWt will not be sought until such time as operating experience and requisite tests shall have demonstrated that an increase in power level is feasible.

Unit 3 will be a single cycle, forced circulation, boiling water reactor which for all practicable purposes will be identical with Unit 2. As such, it is also substantially similar, except for an increase in size and the use of jet pumps, to the reactors recently authorized for construction at the Oyster Creek Nuclear Power Plant of Jersey Central Power and Light Company (AEC Docket 50-219) and the Nine Mile Point Nuclear Power Plant of Niagara Mohawk Power Company (AEC Docket 50-220), each of which is scheduled for operation in 1967. The design is based upon the numerous technological developments in reactor engineering which have been successfully demonstrated in the operation of the Dresden Unit 1 and six other domestic and foreign nuclear power plants built by General Electric.

1.2 Purpose and Scope

The purpose of this Plant Design and Analysis Report is to provide the technical information required by Section 50.34 of 10 CFR 50 in order to establish a basis for evaluation of Unit 3 with respect to the issuance of a construction permit initially and ultimately an operating license.

As previously stated, Unit 3 will be identical with Unit 2 in virtually all respects, e.g., design concepts and criteria, capacity, and components. The only difference in design of Units 2 and 3 contemplated as of the date of the filing of the application respecting Unit 3 are the location of equipment and the sources of auxiliary power.

However, the design of Unit 3 differs from the Unit 2 design which was reviewed by the AEC in Docket 50-237 prior to issuance of CPPR-18 because of (i) changes in the interconnections and sharing of certain auxiliary systems and common facilities, (ii) changes related to providing a turbine-generator

for Unit 3 which is approximately 2% larger in capacity than orginally considered for Unit 2,* and (iii) changes developed in finalizing the design of Units 2 and 3.

To facilitate the review of the proposed design of Unit 3 by those who have recently reviewed Unit 2 , the Unit 3 Plant Design and Analysis Report utilizes substantially the same format found in the Unit 2 Report. Where the design description and analyses of Unit 3 is the same as that which was reviewed for Unit 2 the following notation has been added to appropriate captions - "(Same as Unit 2 PDAR as amended)". Where the Unit 3 report differs from that previously reviewed for Unit 2 because of the use of interconnected or common facilities, the increase in size of the turbine-generator or the finalizing of design, the following notation has been added to appropriate captions - "(Conforming amendment of Unit 2 PDAR required where indicated by ‡)". Where it is intended that a difference in design between Unit 2 and 3 will be maintained, the following notation has been added to appropriate captions - "(Different from Unit 2)".

The principal architectural and engineering criteria which govern the development of the plant design have been set forth in Section II. The plant description and analyses which follow explain the various systems and components designed to satisfy such criteria.

As the unit design progresses from preliminary concepts to final detailed specifications, it may be anticipated that the plant description and analyses will be subject to change and refinement. However, the basic architectural and engineering criteria will remain constant, and any changes or refinements will be kept within the basic framework established by such criteria.

To indicate that certain unit design data and analyses given in the Report are subject to change and refinement, but at the same time to provide a foundation for a meaningful evaluation at the construction permit stage of basic design objectives, the Report presents analyses of a "reference design". The starting point for the "reference design" is the calculated thermal output required to produce a net electrical output of 715 MWe after allowance for auxiliary power requirements of Unit 3. Such calculated thermal output, hereafter referrred to as "reference design thermal output", is estimated to be 2255 MWt and provides the basis for the requested initial authorization to operate Unit 3 at power levels up to approximately 2300 MWt. Other data presented in the "reference design" are related to and analyzed for operation of Unit 3 at the reference design thermal output. However, all components and systems are to be designed for an anticipated ultimate capability of approximately 2600 MWt, e.g., the turbine-generator is designed for a maximum capability of approximately 809 MWe net.

Pursuant to Section 50.35 of 10 CFR 50, the major features or components of Unit 3 respecting which further information is required prior to issuance of an operating license have been identified in Section III of this Report. It will be noted that such features and components are not unique to Unit 3, but are subject to the continuing review of the Atomic Energy Commission with respect to Dresden Unit 2 in AEC Docket 50-237 and the Oyster Creek and Nine Mile Point plants in AEC Docket Nos. 50-219 and 50-220, respectively.

* All changes in the Unit 2 design, including these related to provision of turbine-generator for Unit 2 which will be a twin of the one provided for Unit 3, required to conform with the Unit 3 design will be submitted for review by amendments of the Unit 2 Plant Design and Analysis Report (Unit 2 PDAR) filed in AEC Docket No. 50-237.

As detail design progresses and additional information becomes available, the Report will be amended from time to time to reflect any changes or refinements. While at the construction permit stage most of the design data should properly be stated in the future tense, the Report is generally in the present tense. This is done so that the Report will be current when the final designis complete.

1.3 Organization of the Report

The information and technical data descriptive of the unit design and analysis of their operational effects upon the environs, both routine and otherwise, are presented in two volumes.

Volume I provides a description and an analysis of Unit 3 in twelve sections, designated by Roman numerals, e.g., I, II. Each such section is subdivided into sections which have been given an Arabic numeral, e.g., I-4, which sections are individually paginated, i.e., page number I-4-5 is the fifth page of Section I-4.

Tabulations of data appearing throughout the text of Volume I are designated as "Tables" and are identified by the Roman numeral corresponding to the section in which it appears with an Arabic numeral indicating its sequence among the Tables appearing in that section, e.g., Table I-2.

Volume II contains the applicable pictures, drawings, plot and building elevation plans, sketches, and electrical and piping diagrams referred to in Volume I. All such presentations are designated Figures which are numbered sequentially as they are referred to in the text. To assist in rapid location and identification of a particular Figure, the number, as referenced in the text is shown in bold Arabic type enclosed in a bold outlined circle on the upper right hand corner of the Figure. Volume II also contains several appendices, designated by capitalized alphabetic characters, e.g., A, B, C, etc., and a bibliography.

Additional detailed information respecting the geology, land usage and population, seismology, hydrology, meteorology, atmospheric diffusion characteristics, and monitoring programs of the Dresden Station and environs may be found in Volume III, Site and Environs of the Plant Dresden Unit 2, filed in AEC Docket 50-237.

2.0 SITE AND ENVIRONS

2.1 Introduction

The Dresden Nuclear Power Station was thoroughly investigated as a site for a nuclear power reactor and found to be suitable by the AEC in 1956 when the construction permit for Dresden Unit 1 was issued. The successful operation of Unit 1 since 1960 and the environs monitoring program carried on by Commonwealth, the State of Illinois and the Argonne National Laboratory have confirmed such findings.

More recently, in order to be assured that there had been no changes in the site characteristics or development in the site environs, new studies and investigations were conducted to determine that the Dresden Station is suitable as a site for Unit 2. Studies and investigations by independent, qualified expert firms in the areas of meteorology, geology, seismology and hydrology and further evaluation of population densities and land usage in the site environs were prepared and submitted for review in AEC Docket 50-237. On the basis of such studies and the reviews by the AEC Staff and other governmental agencies it has been concluded that the Dresden Station satisfies the criteria contained in 10 CFR Part 100 and that Unit 2 can be constructed and operated at that site without undue risk to the health and safety of the public.

Such studies and evaluations support the same conclusion with respect to the construction and operation of Unit 3 at the Dresden Station. A complete report of such studies may be found in Volume III of the Plant Design and Analysis Report for Unit 2 submitted in AEC Docket 50-237 and is incorporated herein by reference. Summaries thereof are set forth below:

2.2 Description of Site and Adjacent Areas

(Conforming amendment of Unit 2 PDAR required where indicated by ‡)

2.2.1 Site Size and Location

The site for Dresden Nuclear Power Station consists of a tract of land of approximately 953 acres located in the northeast quarter of the Morris 15' quadrangle (as designated by the U.S.G.S.), Goose Lake Township, Grundy County, Illinois. The tract is situated in portions of Sections 25, 26, 27, 34, 35 and 36 of Township 34 North, Range 8 East of the Third Principal Meridian. The site boundaries generally follow the Illinois River to the North, the Kankakee River to the east, a country road from Divine extended eastward to the Kankakee River on the south and the Elgin, Joliet and Eastern Railway right-of-way on the west as shown in Figure 2A.

2.2.2 Site Ownership

Commonwealth Edison Company is the sole owner of the entire 953 acre tract subject only to an easement of the U.S. Government for an access road to the Dresden Island Lock and Dam maintained and operated by the U.S. Corps of Engineers. Such access road traverses the site from south to north approximately 0.8 mile west of the plant.

In addition to ownership of the 953 acre tract, Commonwealth also leases approximately 17 acres in two narrow strips of river frontage located near the northeast corner of the site from the State of Illinois. The terms of the lease provide that these "buffer" strips shall remain idle.

2.2.3 Location of the Units on the Site

Unit 1 is located in the northeast quadrant of the site with an intake canal extending west from the Kankakee River and a discharge canal extending north to the Illinois River.

Unit 2 is being constructed on the site immediately to the west of and adjacent to Unit 1. ‡ The location of Unit 3 is immediately to the west of and adjacent to Unit 2. At this location, the Units will be situated approximately 0.5 mile from the south boundary of the site, 0.5 mile west from the centerline of the Kankakee River to the east, 0.5 mile south of the center of the navigation channel in the Illinois River, and approximately one mile from the west boundary of the site.

2.2.4 Access to the Site

Unit 1, including the intake and discharge canals, is completely enclosed by a security fence consisting of six-foot high chain link fencing surmounted by three stranded barbed wire. This fence also established the boundary of the Unit 1 site for purposes of the Price-Anderson indemnity agreement and the nuclear liability insurance policies maintained with respect to Unit 1.

‡ Access to Unit 1 is controlled at a security gate. Units 2 and 3 will be constructed outside the security fence surrounding Unit 1. The fence, as shown in Figure 2A, will be adjusted from time to time so that control of access to Unit 1 can be maintained without interfering with the construction work. Progressively, the security fence will be extended in such manner as to maintain control of any construction activities within the operating areas of the station.

A paved county road extends south from the Dresden Nuclear Power Station gate house and intersects several other paved county roads which connect with several state highways. Lorenzo Road which runs in an east-west direction approximately 3-1/2 miles south of the site provides access to Interstate Route 55 approximately 4 miles east of the site. Interstate Route 55 is a limited access highway between Chicago and St. Louis. Another limited access highway, Interstate Route 80, which traverses the State from east to west, lies approximately five miles north of the site and is accessible either from Interstate Route 55 or from a state highway, Illinois 47, at a point approximately two miles north of Morris, Illinois, as shown on Figure 2B.

Railroad access to the site is provided by a siding from the Elgin, Joliet and Eastern Railway right-of-way which forms the western boundary of the site.

There are no airports within eight (8) miles of the site and the closest major airports are Chicago O'Hare International Airport and Chicago Midway Airport situated approximately 50 and 40 miles, respectively, to the north and northeast of the site.

The frontage upon the Illinois and Kankakee Rivers would permit access by water, but no facilities for boat docking or access roads to the frontage have been developed.

2.2.5 Other Activities on the Site

Portions of the 953 acre tract outside the area occupied by Unit 1 and that required in ‡ the construction of Units 2 and 3 are leased to a neighboring farmer for cattle grazing and field crops. Approximately 150 acres are used for grazing with appropriate fencing provided to control the approximately 75 head of cattle that may be present during the pasturage growing season. Field crop cultivation generally occupies about 300 acres.

Some recreational activity in the form of hunting is permitted on the site outside the security fenced areas during legally prescribed seasons. Control of hunting is delegated to the lessee in recognition of his interest in preventing damage to livestock and crops.

No activities other that those enumerated are currently contemplated for the future. There are no residences on the site.

2.3 Population and Land Usage in Adjacent Areas

(Same as Unit 2 PDAR as amended)

Residential occupancy in the immediate vicinity of the Dresden site continues to remain low. Within a 1-mile radius there are several residences at the Dresden Dam about 0.8 mile NW of the reactor locations, a few homes about the same distance on top of the bluffs on the opposite shore of the river to the northeast, and several farm residences at 0.8 to 1.0 mile to the south and southwest. In addition, there is a cluster of about 20 cottages on the west shore of the Kankakee River about 0.7 mile from the reactor locations. Most of these are occupied only part-time for recreational purposes.

No new village population nucleus has developed near Dresden within the past 15 years, and no small village of as many as 100 residents exists within 3 miles of the site.

The population within a radius of 5 miles from the site is approximately 2,600. The largest village in this zone is Channahon (pop. 1,200) which is located 3-1/2 miles to the northeast.

The total population within a 10-mile radius is about 23,000. The largest town in this area is Morris, the county seat of Grundy County, with a population of about 8,000. The increase in total population within the 10-mile zone was less than 10% in the 1950-1960 census interval. There is no reason to believe that this trend will not continue in the foreseeable future.

The population in the 10-25 mile zone is estimated to be 225,000. There are two population centers within this zone, the closest being Joliet, centered 14 miles northeast of the site, with a population of about 67,000. The city of Aurora, 25 miles to the north (which is situated in the southeastern corner of Kane county), comprises the other population center. By 1970 it is estimated, on the 35% growth pattern in the 1950 - 1960 census interval, that the population of the 10-25 mile zone will have increased to approximately 300,000. Present knowledge of scheduled projects and planning for this area does not indicate that the growth rate will be significantly changed in the next 5 years. Estimates beyond 5 years for a local area of this size are not considered reliable.

The land to the north and west of the site is used principally for argiculture. To the south there is about 3 miles of farm land and then a large abandoned strip mine area. The large (36,000 acres) Joliet Arsenal is located east of the site and adjacent to a recreational area of about 2500 acres owned by the State of Illinois.

2.4 Geology

(Same as Unit 2 PDAR as amended)

A recent study of the geology of the Dresden site has been made by Dames and Moore, Consultants in Applied Earth Sciences, Soil Mechanics, Engineering Geology, Geophysics. Work was performed by their San Francisco and Chicago offices, and some of the core testing was done in their New York Laboratory.

The previously available geological and associated data and reports for the Dresden area were reviewed, additional background data were collected, and a field reconnaissance of the area was performed by a geologist. The results of the 69 previous borings on the Dresden site were studied, and two additional test borings to the approximate 100 foot depth were made in March, 1965 in the immediate area of the Unit 2 principal structures. Samples of the overburden soils and continuous cores of the underlying rock were obtained. Representative cores of rock were subjected to unconfirmed compression tests, density tests, and laboratory dynamic tests to evaluate the compressional wave velocity and the shear modulus of the various rock strata encountered. Using small explosive charges, tests were performed in the test borings to measure the in-place compressional wave velocities of the various strata present.

The generalized geologic column for the site consists of an upper layer of Pennsylvanian Pottsville sandstone of variable thickness which in the two new borings showed a thickness of 40 to 50 feet. Next below is a layer of about 15 to 35 feet of Ordovician Maquoketa Divine limestone based on a 65 foot layer of Maquoketa dolomitic shale. The Ordovician system has a total thickness approaching 1000 feet, with the Cambrian system next below. Brecciated rock is found on some cross sections and is indicative of ancient faulting. The geologic evidence indicates that these faults are inactive.

Laboratory tests showed that unconfined ultimate compressive strength on boring samples ranged from 2,000 to 15,000 pounds per square inch on most samples. Laboratory wave velocity propagation tests showed 4,000 to 15,000 feet per second, and the field testing in the two borings were generally consistent with the laboratory findings.

In summary it may be said that the geological characteristics of the site, which were previously studied and determined to be suitable for Dresden Unit 1, have been confirmed by the recent studies. The load bearing capability of the rock formation is significantly in excess of that necessary for the support of the proposed unit. The topographic (elevations) characteristics of the Dresden Station, particularly that proposed for location of the new unit, preclude possible movements (slides), either of the plant structures into the Illinois River or earth slides from adjacent higher elevations on to the unit.

2.5 Hydrology

(Same as Unit 2 PDAR as amended)

The Harza Engineering Company, Chicago, Consulting Engineers - River Projects was retained to advise on the characteristics of the river systems of interest.

The Dresden site at the confluence of the Des Plaines and Kankakee Rivers is at the location considered to divide the upper and lower parts of the Illinois River system. The normal pool elevation controlled at the adjacent Dresden Island Lock and Dam is 505 feet, with a maximum historical flood elevation of 506.4 feet. Nominal ground elevation is about 516 feet at the location for the principal structures of Units 2 and 3, which renders the probability of site flooding remote. Spillway capacity at the Dresden Island Lock and Dam is well in excess of the estimated maximum instantaneous flow of the Illinois River (100,000 cfs, based on the assumption that maximum flows for all contributory streams occur simultaneously). The site elevation is well above the vast valley storage area upstream from the dam.

River system flow data applicable to the Dresden site for the years 1961-1964 show that river flow exceeding 3,000 cubic feet per second (cfs) on 98% of the days, 3,600 cfs on 93%

of the days, 4,000 cfs on 87% of the days, 5,000 cfs on 63% of the days, and 6,000 cfs on 48% of the days. Such flows are more than adequate to meet the cooling water requirements of the three units and assure the availability of sufficient quantities of water for dilution of all radioactive liquid wastes discharged into the Illinois River within the limits estimated in 10 CFR 20 and to reduce concentrations below the point of discharge to approximately 1/1000 of the M.P.C.

The combined effects of dilution, mixing, radioactive decay and deposition on river bottom of the radioactivity will have occured prior to the discharged water reaching the point of first domestic use at Peoria and will render the contribution of radioactivity by Dresden Station negligible in relation to that present in the Illinois River from sources other than that of Dresden Station.

The principal usages of the water of the Des Plaines River below Lockport and of the Illinois River are for navigation, sewage disposal and dilution, and condenser cooling water for power plants. At and below Peoria, 110 miles downstream, the Illinois River is also used for domestic water supply. The Kankakee River is not navigable and is used for domestic supply. Corps of Engineers future planning envisions a second lock at the Dresden Dam.

River system water temperatures fluctuate principally due to the seasons. The U.S.P.H.S. in a 1963 report said that due to river usage, the net rise in temperature in the upper portion of the waterway system was about 9°C. The chemical composition of the river waters was studied in detail during 1961 - 1962, as were the biological and bacteriological conditions. The over-all effect is that the lower river system is biologically degraded, and that most sampling stations on the upper and lower system showed evidence of excessive pollution.

2.6 Regional and Site Meteorology

(Conforming amendment of Unit 2 PDAR required where indicated by ‡)

Murray and Trettel, Certified Consulting Meteorologist, Northfield, Illinois, have been retained to advise on regional meteorology characteristics.

The site is located in typical "rolling prairie" Illinois terrain. The only major topographic influence, meteorologically speaking, in the area is Lake Michigan, but this is 45 miles to the northeast and is considered to have an insignificant effect on the site climatology.

Maximum temperature in the area, based on the July, 1949 - June, 1955 Argonne National Laboratory data, is 97°F, and the minimum is - 19°F.

Normal annual precipitation in the area is 33.18 inches. Within a 24-hour period a maximum of 6.24 inches has been recorded. Average yearly snowfall since 1929-1930 is 37.1 inches. The maximum snowfall since 1929-1930 was 66.4 inches, recorded in the winter of 1951-1952.

In the 50-year period, 1913-1963, four tornadoes have been reported in Grundy County. Of 140 tornadoes reported in the state as a whole, 52 are considered "destructive" i.e., caused $50,000 damage or more and/or at least one death. Average area covered by reported tornadoes is about 8 square miles. The shortest path is 1 mile, the longest 163 miles. Width of paths range from a minimum of 34 yards to 4 miles maximum.

Annual wind frequencies show a rather uniform distribution of wind direction. The most frequent wind directions are from the west and south sectors (22-1/2 degrees). Average wind speed at the site at the 15-foot level is about 8 mph. Maximum wind velocity reported in the

area of the site is 109 mph unofficially reported at Joliet on April 3, 1956, and on April 30, 1962 (the official Weather Bureau Station closed in 1952). This is a fastest gust reported during heavy thunderstorms and scattered tornadic activity. The fastest mile of wind reported at various locations in the site area is 87 mph at Chicago and 75 mph at Peoria.

Hourly wind direction variability at the site shows that an average direction range (angular change in direction) is 120 degrees in a 1-hour period, for all wind speed conditions combined. During 0 - 3 mph wind speeds, the average range in direction is 100 degrees. Approximately 87% of the time when the wind speed is 0 - 3 mph (or 98.3% of all wind speeds) the wind direction range is 60 degrees or more, which corresponds to a value of the diffusion parameter $\sigma_\theta \bar{u}$ of 20 degree-mph or 0.16 radian-meters/second.

It is concluded that from a meteorological standpoint the site is suitable for the combined ‡ operation of Units 1, 2 and 3. The environmental surveys of the site and surrounding areas conducted by Commonwealth, Argonne National Laboratory and the State of Illinois demonstrate that meteorologic diffusion characteristics provide a means for dispersion of gaseous wastes emitted during normal operation to a degree that they are almost undetectable in the environs of the site. There is nothing in the meteorological or topographical data which indicate that the diffusion characteristics would not be operative during assumed hypothetical accident conditions. The hourly wind direction variability of 60 degrees for more than 98.3% of the time at all wind speeds provides evidence that the concentration of any accidental release of radioactive gaseous products would be rapidly diluted and dispersed.

The occurrence of tornadic activity in Illinois and throughout the midwest is recognized. Since tornado effects are generally erratic and localized to very narrow paths or areas, the probability of tornado damage at any particular point, or even an area as large as the Dresden site, is so remote as to be incalculable. Nevertheless, the possibility of tornado damage makes it necessary that the proposed unit be so designed that each can be shut down and maintained in safe, shutdown condition in the event tornadic action should cause damage at the site or interrupt any service necessary for normal operation.

The reported occurrence in the general area of the site of sustained winds in the range of 75 to 87 mph indicates that a structural design capable of withstanding wind loadings of 110 mph provides adequate assurance that Units 2 and 3 will be capable of maintained safe operation under sustained wind loadings more severe than have been recorded in the area. In the remote event of higher wind velocities safety of the public is assured by providing an ability to shut down the proposed unit and maintain it in a shutdown condition.

2.7 Seismology

The Dresden site area is placed in Zone 1 (zone of minor damage) on the seismic probability map of the 1958 Uniform Building Code. The August 1958 Seismic Regionalization map by Richter gives general predictions of probable maximum intensity, and, recognizing that lines between the areas of differing intensity are approximations only, shows the Dresden region as Modified Mercalli 7 to 8.

Only a few earthquakes of significant intensity in northern Illinois have been reported since 1800, and none has been accompanied by clear-cut surface faulting. A quake on May 26, 1909 caused moderate damage in Aurora, Bloomington, Chicago, and Joliet, and may have been of intensity

MM7 in the Dresden area. A quake on January 2, 1912, had a reported intensity of MM6 at Aurora, Yorkville, and Morris, and probably was of similar intensity at Dresden. Consideration of an intensity of MM7 for the Dresden region appears appropriate.

The engineering consulting firm of John A. Blume and Associates, San Francisco, has been retained for advice on seismology, and they have consulted Dr. Perry Byerly, Oakland, California, on the seismicity of the site region.

The seismological studies indicate that the area of northern Illinois and the actual Dresden site are seismically suitable. Nevertheless, it has been considered appropriate to adopt a design approach which will assure the safety of Units 2 and 3 so as to preserve the ability to maintain the plants in a safe, shutdown condition in the event of a strong earthquake having a ground acceleration of 0.2g.

2.8 Environs Radioactivity Monitoring

The natural and man-made radioactivity of the environs of the Dresden site is surveyed by several monitoring programs. The long-established and continuing program of the Argonne National Laboratory monitors a radius of about 100 miles, thus encompassing the Dresden area, and includes one monitoring point 3 miles north of Dresden. An initial series of river samples was analyzed in 1956-57 by the National Aluminate Company under contract to the General Electric Company. The monitoring program of the State of Illinois Department of Health includes sampling of air and water near the Dresden site starting in November, 1959. The continuing program sponsored by the Commonwealth Edison Company was started in September 1958, and typically includes some 3000 to 4000 radioactivity analyses and survey instrument readings each year.

Particulate radioactive material in the air is dominated by fallout from weapons testing, reaching a beta emitter peak of 1.3×10^{-11} $\mu c/cc$ in June of 1963 compared to about 10^{-12} $\mu c/cc$ in late 1964.

External gamma radiation of 2 to 3 milliroentgens per week is from natural background, cosmic and ground sources, and is not significantly altered by weapons testing.

River water concentrations show a natural background of 1 to 5×10^{-8} $\mu c/cc$ due to natural radium, uranium, and radio-potassium, and have shown an order of magnitude increase during the 1963 peak weapons testing fallout.

Well water alpha radioactivity concentrations average about 0.3×10^{-8} $\mu c/cc$, the same as for surface water. Beta concentrations of well water fluctuate as a function weapons testing fallout. The range of fluctuations have been from 1.5×10^{-8} $\mu c/cc$ in 1961 to 4×10^{-8} $\mu c/cc$ in 1964.

Biological samples from the river, and vegetation and milk samples also reflect trends ascribable to weapons testing.

The over-all findings have been in general agreement with other local programs and with the national fallout surveillance network results.

2.9 Conclusions Respecting Site and Environs

(Conforming amendment of Unit 2 PDAR required where indicated by ‡)

‡ The construction of Units 2 and 3 on the Dresden site meets the reactor site criteria described by the Commission in 10 CFR 100 for the following reasons:

‡ a. Commonwealth's ownership of the large, 953 acre, tract provides the requisite exclusion area for power reactors such as Units 2 and 3.

b. There are no residences on the site or within a radius of 0.5 mile of Units 2 or 3.

‡ c. Units 1, 2 and 3 are independent of each other to the extent that an accident in one would not initiate an accident in the other and the simultaneous operation of the three units will not result in total radioactive effluent releases beyond allowable limits, but will be kept within limits now prescribed for Unit 1.

d. The calculated total radiation doses under postulated hypothetical accident conditions to an individual at the boundary of the exclusion area or at the outer boundary of the "low population zone" are within the limits prescribed by 10 CFR 100.

e. Activities which are permitted on the site but are unrelated to the operation of any unit do not present any hazards to the public.

f. There are numerous access roads, including Interstate Routes 55 and 80, within the "low population zone" permitting rapid evacuation.

g. The population density and use characteristics of the site environs in the "low population zone" are compatible with the combined operation of the three units.

h. As previously discussed, the geological, hydrological, meteorological and seismological characteristics of the Dresden site and environs are suitable
‡ for the location of Units 2 and 3 on such site.

3.0 PLANT DESIGN BASES DEPENDENT UPON THE PLANT AND ENVIRONS CHARACTERISTICS

(Conforming amendment of Unit 2 PDAR required where indicated by ‡)

Information relating to the Dresden site and environs is included in Volume III of the Plant Design and Analysis Report for Unit 2 submitted in AEC Docket 50-237 and is incorporated herein by reference. This information is summarized in Section I-2-0. It is intended to use this information as applicable to the design of Dresden Units 2 and 3. Several design bases are presented in this section.

3.1 Off-Gas System

‡ Dresden Units 2 and 3 are designed to use a new 310 foot stack. Dresden Unit 1 will continue to use
‡ the existing 300 foot stack. The current stack release limits for Unit 1 will apply to the aggregate release
‡ from the three units. At present these release limits are set forth in the Dresden Unit 1 Facility License
‡ DPR-2, as amended, and are in compliance with 10 CFR 20.

3.2 Liquid Waste Effluents

‡ Dresden Units 2 and 3 will use a common discharge canal which will combine with that of Unit 1 to
‡ form a single point of discharge to the Illinois River. Current license limits on the release of radioactive
‡ liquids will apply to the three units. The limits are those described in the Dresden Unit 1 Facility License, DPR-2, as amended, and are in compliance with 10 CFR 20.

3.3 Wind Loading Design

All structures will be designedto withstand the maximum potential loadings resulting from a wind velocity of 110 mph. The design will be in accordance with standard codes and normal engineering practice.

Structures, where failure could affect the operation and functions of the primary containment and process systems, will be designed to assure that safe shutdown of the reactor can be achieved considering the effects of possible damage to these structures when subjected to the forces of short term tornado loading.

3.4 Geology

The geology of the area indicates that bedrock loading capability ranges from 2,000 to 15,000 psi. These values are well above normal high load footing design values. Consequently, no problems or restrictions beyond normal design practice are anticipated.

3.5 Seismic Design

The seismic design for critical structures and equipment for this unit will be based on dynamic analyses using acceleration or velocity response spectrum curves which are based on a ground motion of 0.1g.

The natural periods of vibration will be calculated for buildings and equipment which are vital to the safety of the plant. Damping factors will be based upon the materials and methods of construction used.

Earthquake design will be based on ordinary allowable stress as set forth in the applicable codes, but more conservative because the usual one-third increase in allowable working stresses due to earthquake loadings will not be used. As an additional requirement, the design will be such that a safe shutdown can be made during a ground motion of 0.2g.

The foregoing design criteria are for critical items only, that is, for Class I items. Class I items are defined as structures (building and equipment) which are vital to the safe shutdown of the unit and the removal of decay heat.

4.0 TECHNICAL DESCRIPTION OF THE FACILITY

4.1 Summary of Plant Data

(Conforming amendment of Unit 2 PDAR required where indicated by ‡)

The design of Unit 3 for all practicable purposes will be identical to Dresden Unit 2, the construction of which was authorized by CPPR-18, issued January 10, 1966 in AEC Docket 50-237. As such it is substantially similar, except as to size and the use of jet pumps to the design of Oyster Creek and Nine Mile Point nuclear power plants, the construction of which were authorized in the proceedings on the respective applications of Jersey Central Power and Light Company (AEC Dkt. 50-219) and Niagara Mohawk Power Corporation (AEC Dkt. 50-220).

Plant design features and data appropriate to achieve a reactor thermal output of 2255 MW are summarized in Table I-1. Such features and data represent the current final design. While some of the parameters listed in such table may be subject to refinement as design and procurement progresses, no design changes or refinement will violate the principal architectural and engineering criteria as set forth in Section II hereof.

TABLE I-1

PRINCIPAL DESIGN FEATURES

Site	
Location	Dresden Site, County of Grundy, State of Illinois
Size of Site	953 Acres
Site and Plant Ownership	Commonwealth Edison Company
Plant	
Net Electrical Output	715 MW
Gross Electrical Output	752 MW
Net Heat Rate	10,760 Btu/kw-hr
Feedwater Temperature	330.4^{o}F
Reactor	
Thermal Output	2255 MW
Core Operating Pressure	1000 psig
Total Core Flow Rate	98 x 10^6 lb/hr
Steam Flow Rate	8.62 x 10^6 lb/hr
Core Size	
Circumscribed Core Diameter	189.7 in.
Active Length	12 ft.

TABLE I-1 (Contined)

Fuel Assembly	
Number of Fuel Assemblies	724
Fuel Rod Array	7 x 7
Cladding Material	Zircaloy - 2
Fuel Material	UO_2
Active Fuel Length	144 in.
Cladding Outside Diameter	0.570 in.
Cladding Thickness	0.036 in.
Fuel Channel Material	Zircaloy - 4
Core Design Operating Conditions	
Power Density	36.7 Kw/liter
Heat Transfer Surface Area	63,527 sq. ft.
Average Heat Flux	116,300 Btu/hr - ft^2
Maximum Heat Flux	349,000 Btu/hr - ft^2
Minimum Critical Heat Flux Ratio at Overpower equal to or greater than	1.5
Core Average Voids of Coolant Within Assembly	37%
Core Average Exit Quality of Coolant Within Assemblies	9.9%
Design Power Peaking Factors	
Total Peaking Factor	3.0
Additional Allowance for Overpower	1.2
Nuclear Design Data	
Initial Average Fuel Enrichment	2.0%
Water/UO_2 Volume Ratio	2.38
Excess Reactivity of Clean Core (Uncontrolled) at 68^oF	$0.26\Delta k$
Total Worth of Control	$0.30\Delta k$
Reactivity of Core with all Control Rods in	$0.96\ k_{eff}$
Worth of Standby Liquid Control System	$0.17\Delta k$

TABLE I-1 (Continued)

Control System	
Number of Movable Control Rods	177
Shape of Movable Control Rods	Cruciform
Pitch of Movable Control Rods	12.0 in.
Control Materials in Movable Control Rods	Boron carbide granules
Type of Control Drives	Bottom entry, hydraulic actuated
Number of Temporary Control Curtains	324
Material in Temporary Control Curtains	Boron - stainless steel
Control of Reactor Power Output	Movement of control rods and variations of coolant flow rate
Reactor Vessel	
Inside Diameter	20 ft. - 11 in.
‡ Overall Length Inside	68 ft. - 7-5/8 in.
Design Pressure	1250 psig
Coolant Recirculation Loops	
Location of Recirculation Loops	Containment drywell
Number of Recirculation Loops	2
Pipe Size	28 in.
Pump Capacity	45,000 gpm each
Number of Jet Pumps	20
Location of Jet Pumps	Inside reactor vessel
Primary Containment	
Type	Pressure suppression
Design Pressure of Drywell Vessel	62 psig
Design Pressure of Suppression Chamber Vessel	62 psig
Design Leakage Rate	0.5% free volume per day at calculated peak accident pressure

TABLE I-1 (Continued)

Secondary Containment	
Type	Reinforced concrete and steel superstructure with metal siding
Internal Design Pressure	0.25 psig
Inleakage Rate	100% free volume per day at 0.25 in. water negative pressure
Structural Design	
Seismic Resistance	0.1g
Sustained Wind Loading	110 mph
Control Room Shielding	Dose not to exceed 500 mrem in 8 hours under accident conditions assuming full core melt
Unit Electrical Systems	
‡ Number of Incoming Power Sources	5 - 345 KV 1 - 34.5 KV*
Separate Power Sources Provided	2 Auxiliary transformers 1 Standby diesel generator 1 Standby transformer* 1 Station battery
Reactor Instrumentation System	
Location of Neutron Monitor System	In-core
Ranges of Nuclear Instrumentation	
Startup Range	Source to 0.01% rated power
Intermediate Range	0.0001% to 10% rated power
Power Range	1% to 125% rated power
Reactor Protection System	
Number of Channels in Reactor Protection System	2
Number of Channels Required to Scram or Effect Other Protective Functions	2
Number of Sensors per Monitored Variable in Each Channel	2
Method to Prevent Unwarranted Withdrawal of Control Rods	Automatic interlocks

* Standby transformer supplied by 34.5 KV underground line is provided as backup to either Unit 2 or Unit 3 standby diesel generator. (See Section VII).

TABLE I-1 (Continued)

Radioactive Waste Control Systems

Liquid, gaseous, and solid radioactive wastes disposed of in accordance with the requirements of 10 CFR 20.

Other Engineered Safeguards - Summary of Systems and Functions

2 Core Spray Systems	To cool the core under assumed loss of coolant accident; capability to reflood the core following coolant loss.
‡ 2 Containment Cooling Systems*	To remove energy associated with full core melt subsequent to assumed loss of coolant accident.
Rod Worth Minimizer	To restrict control rod patterns to those in which rod worths do not exceed a nominal 0.025 Δk.
Rod Velocity Limiter	To limit the free fall of a control rod from the core to approximately five feet per second.
Control Rod Drive Thimble Support	To prevent a control rod drive mechanism from falling away from the reactor pressure vessel in the unlikely event of a failure of a drive thimble.
Main Steam Line Flow Restrictors	A constriction in each main steam line to reduce rate of blow-down in event of postulated severance of the main steam line.
Isolation Condensers	To avoid overheating of the reactor fuel in the event that reactor feedwater capability is lost and other normal heat removal systems which require a-c electrical power for operation are not available.
Isolation Valves	To effect reactor containment automatically when required under accident conditions.
Core Flooding Capability	To provide a means in conjunction with the jet pump configuration, to permit reflooding the core subsequent to a postulated loss of coolant accident.

*One of the two, full capacity, independent containment cooling systems for Unit 3 is common to both Unit 2 and Unit 3.

TABLE I-1 (Continued)

Other Engineered Safeguards - Summary of Systems and Functions (Continued)

Primary Containment Inerting System	To provide an inert atmosphere in the primary containment system to preclude a hydrogen-oxygen reaction subsequent to a postulated coolant loss accident and full core meltdown.
‡ Standby Gas Treatment System	To provide a means for removal of particulates and halogens from Units 2 and 3 reactor building air under accident conditions prior to discharge of the filtered air through the Units 2 and 3 stack. Also provides a means for maintaining the reactor building at a negative pressure so that leakage is into the reactor building and thus prevents ground level release of building air under accident conditions.
Standby Liquid Control System	To provide a redundant, independent back-up control mechanism in the event that the control rod system becomes inoperable.
Design to Accommodate Loss of Coolant Accident	The safety and protective features are designed to accommodate a loss of coolant accident arising from the assumed failure of any pipe inside the drywell, and the subsequent full core meltdown and associated release of hydrogen from a metal-water reaction.

4.2 Plant Arrangement

(Conforming amendment to Unit 2 PDAR required where indicated by ‡)

An artist's conception of the arrangement of Units 1, 2 and 3 is shown in Figure 1.

‡ A common turbine building for Units 2 and 3 is to be constructed adjacent to the west end of the
‡ Unit 1 turbine building. The Unit 2 turbine generator, excitor, condenser, feedwater heaters, feedwater
‡ and condensate pumps, condensate demineralizer system, condenser circulating system and electrical
‡ switch gear will occupy the east half of the new turbine building. Duplicate equipment and systems for
‡ Unit 3 will be located in the west half of such building.

‡ A common reactor building for Units 2 and 3 will be constructed abutting on the south wall of the new
‡ turbine building. The east half of the reactor building will house the Unit 2 reactor vessel, recirculation
‡ system, primary containment, reactor auxiliary systems, refueling equipment and spent fuel storage, as
‡ well as the common new fuel storage vault to be used for both Units 2 and 3. Except as note, duplicate
‡ equipment for Unit 3 will occupy the west half of the reactor building. During the period when Unit 2 is in
‡ operation and construction of Unit 3 is in progress, secondary containment for Unit 2 will be maintained by
‡ a wall between the Unit 2 and 3 areas. After construction of Unit 3 is completed, the portion of such wall
‡ above the operating floor will be removed, thus providing common secondary containment for both units.

‡ Units 2 and 3 are designed to use the same radioactive waste building, centrally located adjacent to the north side of the turbine building. This building is a two floor concrete structure containing the control, processing, packaging and storage facilities necessary to operate the solid and liquid waste processing equipment.

‡ The control rooms of Units 1, 2 and 3 are adjacent to each other at the juncture of the Unit 1 and
‡ Units 2 and 3 turbine building. The access control building and administration building located to the south
‡ of the Unit 1 turbine building are used for Units 2 and 3 also.

4.4 Containment Systems

(Conforming amendment of Unit 2 PDAR required where indicated by ‡)

The primary containment consisting of a drywell, a pressure suppression chamber, and interconnecting vent pipes provides the first containment barrier surrounding the reactor pressure vessel and recirculation cooling system. ‡ Any leakage from the primary containment system is to the secondary containment
‡ system which consists of the reactor building, the standby gas treatment system, and the 310 foot stack. The integrated containment systems and their associated engineered safeguards are designed so that off-site doses resulting from postulated accidents are well below the reference values stated in 10 CFR 100.

4.4.1 Primary Containment System

(Same as Unit 2 PDAR as amended)

The primary containment is designed to accommodate the pressures and temperatures which would result from, or occur subsequent to, a failure equivalent to a circumferential rupture of a major recirculation line within the primary containment resulting in the loss of reactor water at the maximum rate. The pressure suppression chamber is a steel, torus-shaped pressure vessel approximately half filled with water, and located below and encircling the drywell. The vent system from the drywell terminates below

the water level of the pressure suppression chamber so that in the event of a pipe failure in the drywell, the released steam would pass directly to the water where it would be condensed. This transfer of energy to the water pool would reduce rapidly (within 30 seconds) the residual pressure in the drywell and substantially reduce the potential for subsequent leakage from the primary containment.

Isolation valves are provided on piping penetrating the drywell and the suppression chamber to provide integrity of the containment when required. These valves are actuated automatically by signals received from the reactor protection system. The valves on the auxiliary systems are left open, or are closed depending upon the functional requirements of the system, without reducing the integrity of the primary containment system.

Two features are included in the primary containment design to aid in maintaining the integrity of the primary containment system indefinitely in the event of a loss-of-coolant accident. First, two independent, full capacity containment cooling systems are included for the removal of heat within the drywell and the
‡ pressure suppression chamber. One of these systems is shared by Units 2 and 3 and provides backup con-
‡ tainment cooling for each unit. Second, provision is made in the containment structure design to inert or control the composition of the containment atmosphere during operation. The inert atmosphere is intended to preclude a hydrogen-oxygen reaction should any appreciable metal-water reaction occur subsequent to a loss of coolant accident. These provisions are discussed further in Section V-3 hereof.

After complete installation of all penetrations in the drywell and suppression chamber, these vessels will be pressurized to the calculated peak accident pressure and measurements taken to verify that the integrated leakage rate from the vessels do not exceed 0.5 percent perday of the combined volumes.

All containment closures which are fitted with resilient seals or gaskets will be separately testable at the full design pressure of 62 psig to verify leak tightenss. The covers on flanged closures, such as the equipment access hatch cover, the drywell head, access manholes and personnel lock doors will be provided with double seals and with a test tap which will allow pressurizing the space between the seals without pressurizing the entire containment system. In addition, provision will be made so that the space between the air lock doors can be pressurized to full drywell design pressure.

Electrical penetrations will also be provided with double seals and will be separately testable at 62 psig. The test taps and the seals will be so located that the tests of the electrical penetrations can be conducted without entering or pressurizing the drywell or suppression chamber.

Those pipe penetrations which must accommodate thermal movement are provided with expansion bellows. The bellows expansion joints are designed for the containment system design pressure and can be checked for leak tightness when the containment system is pressurized. In addition, these joints are provided with a second seal and test tap so that the space between the seals can be pressurized to the calculated accident design pressure to permit testing the individual penetrations for leakage.

4.4.2 Secondary Containment System

(Conforming amendment of Unit 2 PDAR required where indicated by ‡)

The primary safeguards functions of the secondary containment are to minimize ground level release of airborne radioactive materials, and to provide for controlled, filtered, elevated release of the building atmosphere under accident conditions. The reactor building provides secondary containment when the primary containment is in service, and primary containment during periods when the primary containment is
‡ open. For these reasons, the reactor building is designed as a controlled leakage structure. Unit 2 and 3

‡ are designed to use the same reactor building. The reactor building is constructed to provide a single
‡ operating floor without separation barriers above that level. Beneath the operating floor the reactor build-
‡ ing is provided with a common wall separating Unit 3 operating and equipment areas from those of Unit 2.
‡ Access doors between the separate areas will be provided to assure ventilation control.

‡ A redundant standby gas treatment system is provided to treat the reactor building atmosphere and
‡ discharge it to the 310 foot stack during containment isolation conditions.

4.5 Reactor Description

(Same as Unit 2 PDAR as amended).

The reactor is a single-cycle, forced circulation boiling water reactor producing steam for direct use in the steam turbine. The reactor core includes the fuel assemblies, control rods and temporary control curtains. The mechanical, thermal-hydraulic and nuclear design of this reactor is similar to the several other boiling water reactors being designed and built by the General Electric Company at the present time.

The core is assembled in modules of four fuel assemblies set in the interstices of a cruciform control rod. This modular core form, common to all General Electric boiling water reactors, permits substantial increase in thermal power with a small increase in core diameter and at the same time preserves the reactivity control characteristics demonstrated in the operation of Dresden Unit 1 and other General Electric power reactors.

The reactor pressure vessel contains the reactor core and structure, steam separators and dryers, jet pumps, control rod guide tubes, and feedwater, core spray and standby liquid control spargers and other components as shown in Figure 12. The inside diameter of the vessel is approximately 21 feet and the inside height between heads is approximately 68 feet. The main connections to the reactor vessel include the steam lines, jet pump motive flow recirculation lines, feedwater lines, and control rod drive thimbles. Other connections are provided for the isolation condenser system, standby liquid control system, core spray systems, and instrumentation systems.

The fuel for the reactor core consists of uranium dioxide pellets contained in sealed Zircaloy-2 tubes. These fuel rods are assembled into individual fuel assemblies of 49 fuel rods each. Each fuel assembly is fitted with a Zircaloy-4 flow channel. Water serves as both the moderator and coolant for the core. The expected performance characteristics of the fuel assemblies are similar to those which have been successfully demonstrated by fuel of similar design in use by Dresden Unit 1 and other General Electric boiling water reactors.

The control rods consist of assemblies of 3/16-inch diameter, sealed, stainless steel tubes filled with compacted boron carbide powder and held in a cruciform array by a stainless steel sheath of 1/16 inch wall thickness fitted with castings at each end. The design of such control rods is almost identical with those which have been used successfully in Unit 1 for more than five years except that control rods of current design are longer due to the use of longer fuel assemblies. The control rods are of the bottom-entry type and are moved vertically within the core by individual, hydraulically operated, locking piston type control rod drives.

The control rod drive hydraulic system is designed to allow control rod withdrawal or insertion at a limited rate, one rod at a time, for power level control and flux shaping during reactor operation. Stored energy available from gas-charged accumulators and from reactor pressure provides hydraulic power for

rapid simultaneous insertion of all control rods for reactor shutdown. Each drive has its own separate control and scram devices.

The systems for reactivity control are of the same design as are to be used in the Oyster Creek and Nine Mile Point Plants, including three important features which provide improved plant safe-guards. First, a control rod reactivity limiting device, called a rod worth minimizer, coupled to an interlock system has been added to assure that the maximum control reactivity associated with any single control rod is less than a nominal 0.025 Δk under all operating conditions. Second, the lower casting of each stainless steel control rod assembly is provided with a rod velocity limiter designed to limit the freefall velocity of the control rod to approximately 5 ft/sec in the remote event of a control rod dropout. And third, the control rod drive thimbles have been provided with a support structure designed to prevent significant movement of the control rod drive thimble and drive mechanism in the unlikely event of drive thimble structural failure. These features are discussed further in Section X-3.0.

Temporary control curtains fabricated of boron stainless steel will be fixed between fuel channels during early life of the initial core to supplement the reactivity control of the control rods.

Reactor cooling water enters the bottom of the core and flows upward through the fuel assemblies where boiling produces steam. The steam-water mixture is separated by steam separators and dryers located within the reactor vessel. The steam passes through steam lines to the turbine. The separated water mixes with the incoming feedwater and is returned to the core inlet through jet pumps located within the reactor vessel. The motive force for the jet pumps is supplied by the water from the two reactor recirculation loops. Each loop has a variable speed centrifugal pump with mechanical seals, motor operated gate valves for isolation of pumps for maintenance, and instrumentation for recirculation flow measurement. The recirculation pump motors receive electrical power from variable frequency motor-generator sets which are used to vary pump speed and the resultant recirculation flow rate as a means of reactor power level control.

The Dresden Unit 2 and 3 reactor designs are the first to use the jet pump feature for coolant recirculation. This feature also provides a vessel within the reactor vessel which provides capability for reflooding the core with water in the unlikely event of a loss of coolant accident. The jet pumps and the inner vessel are discussed further in Sections IV and V hereof.

4.6 Auxiliary and Standby Cooling Systems

(Conforming amendment of Unit 2 PDAR required where indicated by ‡)

In addition to the turbine generator and main condenser system, four independent auxiliary cooling systems are provided for reactor and containment cooling under various normal and abnormal conditions. Except as noted, these systems are very similar in design to those being used in the Oyster Creek and Nine Mile Point plants.

A shutdown cooling system is provided which circulates water from the reactor through heat exchangers and back to the reactor. During shutdown periods, this system provides for the removal of reactor decay heat. Heat from the shutdown cooling system is transferred to the reactor enclosure closed cooling water system, which in turn is cooled through heat exchangers supplied with water from the river.

An isolation condenser system incorporating two condensers is provided for dissipation of decay heat when the reactor is under full pressure and isolated from the main condenser, as in the hot standby condition. The isolation condenser system has its own contained cooling water with replenishment from the condensate storage tanks.

Two separate core spray systems pump water from the pressure suppression chamber pool to the reactor core through spray headers or spargers mounted in the plenum of the reactor vessel above the core. Either of these two core spray systems provides sufficient cooling of the reactor core in the event of the postulated loss-of-coolant accident to prevent core melting and furnishes water at a high flow rate sufficient to refill the inner reactor vessel.

In addition, the design provides for two, independent, full capacity, primary containment spray cooling systems which pump water from the pressure suppression chamber pool through a heat exchanger ‡ to spray nozzles discharging into the drywell. One of these systems is shared by Units 2 and 3 and pro- ‡ vides backup containment cooling for each unit. Water in the drywell is returned to the pressure suppression chamber pool by gravity flow through the interconnecting vent pipes. Each of these systems has been designed to provide sufficient cooling capacity to prevent the rupture of the primary containment due to pressure rise following the postulated loss-of-coolant accident even if it is assumed neither of the core spray systems operates and a metal-water reaction occurs. The heat is removed from the suppression chamber water through the heat exchangers to water supplied from the river.

The core spray and the containment cooling systems are both features similar in design to those to be incorporated in the Oyster Creek and Nine Mile Point plant except that the reflooding capability of the core spray systems is unique to reactors incorporating jet pumps because of the inner reactor vessel provided in the jet pump design. These features are discussed in more detail in Section V-3.0 hereof.

4.7 Plant Control and Instrumentation

(Same as Unit 2 PDAR as amended).

4.7.1 Plant Control

Reactor power is controlled by movement of control rods and by regulation of the recirculation flow rate. Control rods are used to bring the reactor through the full range of power and to shape the core power distribution. Changing recirculation flow rate provides a second method for controlling reactor power. Load following adjustments in reactor power level are accomplished with recirculation flow control. Procedural controls backed up by protective devices are used so that thermal performance does not exceed established limits.

Reactor pressure is automatically controlled by the initial pressure regulator by varying steam flow to the turbine to maintain constant pressure in the reactor. As a result, the turbine power output follows the reactor power output.

A bypass system having a capacity of approximately 40% of steam flow at rated load is supplied with the turbine to restrict overpressure transients resulting from sudden turbine control valve or stop valve closure. The bypass valves are operated on an overpressure signal from the initial pressure regulator. Rapid partial load rejection can be accommodated with the bypass system.

The reactor protection system overrides the above controls to initiate any required safety action, and a redundant standby liquid control system is provided as an independent backup control mechanism to be used in the remote event that the control rod system becomes inoperative.

4.7.2 Reactor Protection System

A reactor protection system is provided which automatically initiates appropriate action whenever the plant conditions monitored by the system approach pre-established limits. The reactor protection system acts to shut down the reactor, close isolation valves, or initiate the operation of standby systems as required.

The automatic reactor protection system consists of two buses of relay contacts that are actuated by sensors from the parameters being monitored. The buses are energized during normal operation, and de-energization of both buses in the reactor scram circuit results in the opening of the scram valves in the control rod hydraulic system causing rapid insertion (scram) of the control rods. Each bus has at least two independent tripping devices for each measured variable which initiates scram but only one device must operate to trip the bus in which it is connected. Both buses must be de-energized to produce a scram. The reactor protection system is designed to cause a scram on loss of power to the protection system. Components of the reactor protection system can be removed from service for testing and maintenance without interrupting plant operations and without negating the ability of the protection system to perform its protective functions upon receipt of appropriate signals.

4.7.3 Reactor Neutron Monitoring System

Reactor power is monitored from the source range up through the power operating range by suitable neutron monitoring channels, the detectors of which are placed inside the reactor vessel. This location has been selected to provide maximum sensitivity to control rod movement during the startup period and to provide optimum monitoring in intermediate and power ranges. The neutron monitoring system is described in Section X hereof.

4.7.4 Manual Reactor Control System

The reactor has hydraulically driven control rods, each of which is controlled manually from the control room. Selection of the control rod to be manually controlled is accomplished by the use of a push button array. Interlocking is provided so that only one control rod can be selected at a time for operation. A pilot light on the position indicator for the selected control rod is energized to indicate which rod is responsive to manual positioning.

Manual control is accomplished by use of a separate control switch which energizes valves in the hydraulic system to move the selected control rod to a new insert or withdrawal position. Normal control permits the rod to move one notch for each operation of the control switch. An override position is provided to permit continuous movement of the rod when desired.

4.7.5 Control Rod Position Indicating System

The position indication system provides simultaneous digital indication of the position of each of the control rods. Position indicators and "all-in" and "all-out" pilot lights are provided for each control rod. These devices are grouped together and arranged on the control room panel in a pattern simulating the relative locations of the control rods with respect to each other in the reactor core. They are integrated on the panel with the in-core monitor system.

4.7.6 Turbine Generator Control

Controls and supervisory instrumentation for the turbine generator are arranged for remote on-line operation from control panels located in the control room.

4.8 Radiation Monitoring Systems

(Same as Unit 2 PDAR as amended).

Instrumentation is provided for continuous monitoring of the radioactivity of certain processes. Processes, significantly high in radioactivity, are monitored for variation from normal. Certain non-radioactive processes are monitored to provide alarm in the event of contamination.

Off-Gas Monitoring System

The radioactivity level of the air ejector off-gas is continuously monitored by two channels of instrumentation. Each channel includes an ionization chamber, log amplifier and power supply. A sample of gas is passed through a chamber where the reactivity level is measured by the ionization chamber. The output of each channel is continuously recorded. A high level trip initiates the closure of the off-gas system isolation valve.

Stack Gas Monitoring System

The radioactivity level of the stack gas effluent is continuously monitored and recorded.

Process Liquid Monitoring System

Certain process streams are monitored and recorded continuously for gamma radioactivity to alert operating personnel in the event of variation from normal. These monitors consist of scintillation-type detectors, log count rate meters, and recorders.

Steam Line Monitoring

A sensor system with a gamma sensitive ion chamber, monitors each of the four steam lines for radiation to detect gross release of fission products from the fuel to the reactor coolant. The detection point is immediately downstream of the outer isolation valve at the drywell penetration. The system is capable of automatically initiating reactor shutdown and closure of appropriate isolation valves if necessary.

Reactor Building Ventilation Monitoring System

Gamma detectors are used to monitor the ventilation system exhaust plenum to detect airborne radioactivity such as noble gases and daughters. High radioactivity level isolates the main ventilation system and energizes the standby gas treatment system.

Area Monitoring System

Gamma-sensitive detectors are located throughout Units 2 and 3 to monitor specific areas. Each monitor covers the range from 0.01 mr/hr to 1,000 mr/hr. The gamma flux level at each detector is indicated continuously in the station control room. Local indication and annunciation are provided in frequently occupied areas. Adjustable trips provide annunciation in the event of a high gamma flux

level of any particular detector. A multipoint recorder records the gamma flux levels indicated by the thirty detectors.

Site Monitoring System

Gamma sensitive detectors are located at the three existing site monitoring stations. A continuous record is kept of the radiation dose levels at the stations.

Environs Monitoring

A discussion of the environs monitoring program is set forth in Section I-2 hereof.

4.9 Fuel Handling and Storage

(Conforming amendment of Unit 2 PDAR required where indicated by ‡)

The refueling procedure is generally referred to as "wet" refueling since all irradiated fuel is always kept under water. The wet refueling procedure allows visual control of operations at all times. This feature is instrumental in producing a safe, efficient refueling sequence.

Spent fuel discharged from the reactor is transferred under water through the spent fuel storage pool canal into racks provided in the storage pool. The storage pool is designed to accommodate the channel stripping operation and the many other fuel maintenance operations that are required. Storage space is also provided in the pool for irradiated fuel assembly channels and control rods, fuel shipping cask and small internal components of the reactor.

New fuel is brought through the equipment entrance of the reactor building and hoisted to the upper
‡ floor utilizing the reactor building crane. The new fuel for both Units 2 and 3 is stored in the new fuel
‡ vault located adjacent to the Unit 2 refueling pool area within the reactor building.

4.10 Turbine Plant System

(Conforming amendment of Unit 2 PDAR required where indicated by ‡)

The saturated steam leaving the reactor vessel flows through four 20-inch carbon steel steam lines to the turbine located in the turbine building. After passing through the turbine, the low pressure steam is condensed, the non-condensable gases are removed, and the condensate is demineralized before being returned to the reactor through the feedwater heaters. The following is a brief summary of the turbine plant and its principal auxiliaries.

4.10.1 Steam Lines

Each of the four steam lines provides a direct connection between the reactor vessel and the turbine. Since the turbine is located outside the primary containment, special design features are provided in each of the steam lines to mitigate the consequences of a postulated steam line break accident. These include a steam line flow restrictor (described further in Section V-5) and two isolation valves which limit the rate and amount of steam loss from the reactor vessel under accident conditions.

4.10.2 Turbine and Condenser

‡ The turbine is a 810,000 kw, 1800 rpm, tandem-compound six flow non-reheat steam turbine designed for saturated steam conditions of 950 psig inlet and 1.5 inches mercury absolute exhaust pressure. The turbine controls include speed governor, overspeed governor, steam admission valves, emergency stop valves, and a pair of initial pressure regulators. The ability of the plant to follow system load is accomplished by adjusting the reactor power level either by regulating the reactor recirculating flow or by moving control rods. The admission of steam to the turbine is governed by the turbine controls. In the event the reactor is delivering more steam than the admission valves will pass, the excess steam is bypassed directly to the main condenser by automatic pressure-controlled bypass valves. The bypass valves and the condenser are designed to accept bypass steam up to 40% of the throttle steam flow rate.

‡ The main condenser is cooled by the circulating water system which pumps water from the river
‡ via the Units 2 and 3 intake canal through the condenser, then returns the heated water through the Units
‡ 2 and 3 discharge canal to the river.

The turbine bypass valves are automatically controlled by reactor pressure, and they are utilized in conjunction with the relief valves to provide reactor vessel over-pressure protection. The capacity of the bypass valves and the relief valves is sufficient to keep the reactor safety valves from opening in the event of a sudden loss of full load on the turbine generator.

4.10.3 Vacuum Pumps and Steam Air Ejectors

A mechanical vacuum pump system is provided to produce a vacuum in the condenser prior to starting the turbine when no steam is available. The gases from the turbine and condenser systems are dis-
‡ charged to the 310 foot stack provided for Units 2 and 3.

During plant operation when the turbine is in operation, the noncondensable gases are removed in the condenser by means of steam jet air ejectors. The ejectors are capable of removing the total volume of gas produced as the coolant passes through the reactor plus the air-inleakage into the condensing system.
‡ The air ejectors discharge the noncondensable gases to the 310 foot stack through a piping system which provides a minimum of 30 minutes of holdup time for the decay of short-lived radioactive gases. Filters are provided for the removal of particulate radioactive materials.

4.10.4 Condensate System

The condensate is pumped from the condenser hotwell through full flow demineralizers to maintain water of high purity. The condensate then passes through three stages of feedwater heating, the reactor feed pumps and then a fourth stage of feedwater heating before returning to the reactor.

4.11 Electrical Systems

4.11.1 Transmission System

(Conforming amendment of Unit 2 PDAR required where indicated by ‡)

‡ The electrical output of Unit 3 will feed into the Commonwealth Edison 345 KV network through five
‡ 345 KV circuits. Two of the 345 KV circuits will leave the Dresden bus on double-circuited towers in a

‡ southerly direction for a distance of approximately one mile, then turning east for a distance of 2-3/4 miles
‡ and then in a northeasterly direction to Goodings Grove Transmission Substation.

‡ Two of the 345 KV circuits will leave the Dresden bus on double-circuited towers in a westerly direc-
‡ tion for a distance of one mile, then turning north to Electric Junction Transmission Substation.

‡ One of the 345 KV circuits will leave the Dresden bus on single-circuited towers in a southwesterly
‡ direction to Pontiac-Midpoint Transmission Substation.

4.11.2 Auxiliary Power

(Different from Unit 2).

The primary feature of the electric power system serving Dresden Station is the diversity of dependable power sources, physically isolated so that any one instrument of failure affecting one source of supply will not communicate to alternate sources, thus assuring a continuous source of auxiliary power to Unit 3. Auxiliary power can be supplied from five separate and independent sources: Unit 2, Unit 3, the 345 KV transmission system, a standby diesel generator and a 34.5 KV line.

The auxiliary power supply from the 345 KV transmission system is protected against the effect of unplanned outages by the diversity of five separate 345 KV circuits and a major generating unit feeding into the 345 KV switch yard at the Dresden site. Any one of these 345 KV circuits has sufficient capacity to furnish all of the auxiliary requirements of Unit 3.

4.11.3 Standby Auxiliary Power Sources

(Same as Unit 2 PDAR as amended).

In the event the 345 KV switch yard were incapacitated, there are still two other independent sources of auxiliary power: the standby diesel generator and the 34.5 KV line. Both sources are connected to the same auxiliary buses and each has capacity for operation of all systems required to shutdown Unit 3 and maintain it in a safe shutdown condition.

The 34.5 KV line on wood poles enters the station from the south. At a point approximately 1,100 feet south of the 138 KV switch yard, the line is sectionalized and an underground feed to serve Units 2 and 3 standby power transformer will be installed.

The standby diesel generator will be housed in a concrete block cell at grade elevation within the turbine building. Equipment connecting the standby diesel generator and the 34.5 KV line to the auxiliary equipment needed for shutdown are protected from damage by metal enclosed switchgear located within the turbine building and underground cable with no exposed terminals.

The diesel generator provides power necessary to maintain the plant in a safe shutdown condition. Typical loads are (1) fire pump, (2) core spray pumps, (3) containment cooling system, and (4) lighting. Power can also be used for minor maintenance if the power outage persists.

Upon loss of normal auxiliary power, the diesel generator starts automatically. As soon as generator voltage is normal, it connects to the appropriate low-voltage buses to supply essential loads after incoming breakers and nonessential loads are tripped. Other loads may be dispatched by the operator if the system power interruption persists. If the diesel generator is not available, the 34.5 KV supply will be selected as the alternate source.

Batteries are used for controls vital to plant safety and to power those functions required for shutdown, such as closing of isolation valves, operating valves to the isolation cooling system, providing minimum required lighting and providing minimum instrumentation, such as control rod position indicators and a neutron channel to monitor the core during shutdown.

4.12 Shielding, Access Control, and Radiation Protection Procedures

(Same as Unit 2 PDAR as amended).

Control of radiation exposure of plant personnel and people external to the plant is accomplished by a combination of radiation shielding, control of access into certain areas, and administrative procedures. The requirements of 10 CFR 20 are used as a basis for establishing the basic criteria and objective.

Shielding is used to reduce radiation dose rates in various parts of the plant to acceptable limits consistent with operational and maintenance requirements. Access control and administrative procedures are used to limit the integrated dose received by plant personnel to that set forth in 10 CFR 20. Access control and procedures are also used to limit the potential spread of contamination from various areas, particularly areas where maintenance occurs. Table I-2 summarizes the design bases for shielding to assure that radiation levels in various areas of the plant are consistent with operational requirements.

TABLE I-2

Degree of Access Required	Design Radiation Dose Rate, mrem/hr
Continuous Occupancy	
Outside Controlled Access Areas	0.5
Inside Controlled Access Areas	1
Occupancy to 10 hr/week	6
Occupancy to 5 hr/week	12

The above design bases are at the shield wall. Generally, areas away from the shield wall receive lesser dose rates and this plus occupancy factors reduce the integrated dose received. Personnel involved in all phases of operation and maintenance normally receive far less than the permissible dose.

Both operating and shutdown conditions are considered in establishing the shielding design.

Shielding is also used as necessary to protect equipment from radiation damage. Of principal concern are organic materials such as insulation, linings, and gaskets. The basic dose limit established for such components is generally 10^6 rads over the life of the equipment or parts thereof. The design levels are adjusted to accommodate the radiation damage resistance of specific materials.

Access Control Procedures

Access control is established in the plant arrangement and design so that in general, most areas and equipment are kept freely accessible, and areas where radiation and/or contamination may be present are entered and exited via an access control station. The major emphasis is on checking of personnel or equipment leaving the controlled area to prevent contamination spread. Local control zones within the general access controlled portion of the plant may be permanently or temporarily established to further limit potential spread of contamination.

Radiation Protection Procedures

Procedures are established for use of survey instruments, protective clothing, film badges, and dosimeters for personnel protection. During operation, periodic surveys are made to maintain control of potentially contaminated areas and spread of contamination. Surveys are also made prior to maintenance or unusual work to provide radiation exposure control.

Radiation shielding is tested for adequacy during initial plant startup to detect any design deficiencies particularly those due to streaming through shield penetrations.

4.13 Radioactive Waste Control

(Conforming amendment of Unit 2 PDAR required where indicated by ‡)

‡ Unit 2 gaseous, liquid and solid radioactive waste control facilities are expanded to include Unit 3 so that disposal of radioactive materials from the site is in accordance with applicable regulations.

‡ A gaseous radioactive waste control system is provided to filter, monitor and record the process
‡ off-gases as appropriate before release through the Units 2 and 3 310 foot stack during normal and abnor-
‡ mal plant operation.

‡ A liquid radioactive waste control system is provided for collection, treatment, storage, and dis-
‡ posal of liquid wastes from both Units 2 and 3. Wastes are collected in sumps and drain tanks and transferred to the radwaste facility for further treatment, storage, or disposal.

In the radwaste facility, liquid wastes to be discharged from the system are handled on a batch basis with each batch being analyzed and disposed of as required. Treated liquid waste is either returned to the condensate system, stored awaiting disposition off-site, or released to the Illinois River after dilution in the discharge canal.

Solid radioactive wastes are treated, stored, packaged and shipped off-site.

5.0 SUMMARY EVALUATION OF PLANT SAFETY

(Same as Unit 2 PDAR as amended)

5.1 General

The general safeguards objectives of the design of this unit are to protect the plant equipment and to prevent radiation exposures in excess of a small fraction of established limits to any persons on or off the station premises, either during normal operation or during accident conditions.

In order to meet these objectives, the plant design and operation include the following:

a. Means for positive control of plant process parameters important to safety.

b. Inherent safety features and automatic devices are included in the design to prevent an operator error or equipment malfunction from causing an accident. Tests are conducted periodically to assure proper functioning of such devices.

c. Multiple barriers are provided to contain the radioactive materials. The core is conservatively designed to operate with thermal parameters significantly below those which could cause fuel damage.

d. The plant operating personnel are thoroughly knowledgeable in the plant operating characteristics, and are trained to follow written procedures to minimize the occurrence of operating errors.

This section summarizes the significance of these important features as they relate to the safety of this unit.

5.2 Normal Plant Operation

(Same as Unit 2 PDAR as amended)

This unit is designed to operate safely under all normal operating modes for which the plant is designed. These operating modes include sustained full power operation, starting up, shutting down, load changing or maneuvering, refueling, hot standby, and shutdown. The plant is also designed to prevent radiation exposures in excess of a small fraction of acceptable levels to persons on or off the plant premises under accident conditions as well as the normal operating conditions.

This safety of operation is accomplished by incorporating specific engineered and inherent safety features in the design of the plant. The extent to which these features provide the desired levels of safety is summarized in the following paragraphs.

a. Control of Plant Power Output

(Same as Unit 2 PDAR as amended)

During normal plant operations, the control of reactivity within the reactor core is accomplished by means of two basic power and reactivity control systems. Gross reactor power and power distributions within the core are controlled by the control rods which are manipulated by the operator. Reactor power can also be adjusted and controlled over a range of

approximately 30 percent by variation of coolant recirculation flow rate through the core. These functions are accomplished by the operator from the control room.

Each of the 177 control rods has its own drive and control devices. Each control rod drive is electrically and hydraulically independent of the others, though it utilizes a common hydraulic pressure source for normal operations, and a common dump volume for rapid insertion or scram of the rods.

Withdrawing a control rod reduces the neutron absorption effect of the rod and increases core reactivity. Reactor power then increases until the negative reactivity effects of increased boiling and void formation within the core, combined with negative Doppler reactivity due to fuel heating, just balances the change in reactivity caused by the rod withdrawal. The increase in boiling rate tends to increase the pressure within the reactor vessel causing the initial pressure regulator to open the turbine control valves to maintain constant reactor vessel pressure. When a control rod is inserted, the converse effect takes place. Similarly by increasing the core flow rate, the void content of the core is temporarily reduced causing an increase in reactivity for a given control rod setting. As the reactor power level increases, the void coolant and fuel temperature are increased, thereby automatically causing the reactor to equilibrate at a new, higher power level. Conversely when the core flow is reduced, the reactor power reduces because of an increase in core void content. The void content and fuel temperature then decrease until the reactor automatically equilibrates at a new, lower power level.

The rate of power increase is limited by the rate at which control rods can be withdrawn, and the rate of variation of the recirculation flow. Control rods are operated one at a time and are withdrawn in a symmetrical pattern from the core. In this manner it is estimated that full load power operation can be achieved at a rate of approximately 3% per minute. This rate is sufficiently slow that load changes are always under control by the operator, and any maneuvering transients are accommodated well within the design parameters of the plant. Load following is accomplished with flow control.

The performance of the reactor core and the indication of reactor power level are continuously monitored by the neutron monitoring system, the sensors of which are located in the reactor core. This system efficiently and accurately provides power level monitoring from source range to full power on a gross and local basis. The significant safety features of the gross or average power monitor are:

1. prevention of rod withdrawal if the readout meter is not on scale,
2. prevention of rod withdrawal or flow increase if a pre-set high neutron flux level is reached,
3. initiation of reactor shutdown in the event a high flux trip limit is reached, and
4. provision for a rod scram and protective interlocks if the monitoring system becomes inoperative.

The local power monitoring instrumentation is designed to monitor local fuel assembly heat flux continuously and provide information to permit evaluation of the critical core parameters.

As noted above, the signals from the neutron monitoring system have the capability to initiate a scram, and this is accomplished through the logic circuit of the reactor protective functions as required.

The design of the reactor core nuclear performance characteristics include several features which contribute to a favorable nuclear dynamic response under transient conditions. The nuclear response characteristics provide strong negative reactivity feedback under severe transient conditions, contribute negative reactivity feedback consistent with the requirements of overall plant nuclear hydrodynamic stability, and provide a response which regulates or damps changes in power level and in the spatial distribution of power production in the core to a level consistent with safe and efficient operation. The response characteristics are inherent in the design of the plant and result from the negative Doppler coefficient of reactivity of the fuel, the negative moderator temperature coefficient, and the negative moderator void coefficient.

The above coefficients, together with the regulating or control devices, including the control rods, the flow control, and the initial pressure regulator, complement each other to achieve stable, well-controlled plant performance over the entire range of power operation.

b. Control of Core Cooling

(Same as Unit 2 PDAR as amended)

The plant is provided with four methods of removing heat from the core. These heat removal systems, together with the core design features, provide assurance that adequate core cooling is available under all normal modes of plant operation, and under certain conditions of equipment malfunctions or operator errors. These systems are in addition to the core spray system, which is used under certain accident conditions. During periods when the plant is shutdown or is in the refueling mode, decay heat is removed by means of the shutdown cooling system. For reliability, this system contains two heat exchangers for removal of decay heat from the core.

During periods when the reactor is at hot standby, or is starting up or shutting down, heat is removed by generating steam in the core, and condensing the steam in the turbine main condenser. This is made possible by the turbine bypass system to the main condenser which is designed to accommodate 40% of full power steam flow. During power operation, heat is removed in the turbine and in the main condenser. If for some reason a transient condition exists wherein the turbine and condenser cannot accept a portion of the steam from the reactor, the reactor relief valves open and discharge steam to the primary containment pressure suppression chamber where it is condensed. Makeup water is added to the reactor by the feedwater system. When the reactor is isolated from the main condenser, the isolation condenser system is used to remove reactor decay heat. Steam passes from the reactor vessel to the tube banks of the isolation condenser. Condensate returns by gravity to the reactor. Steam generated outside the tubes in the isolation condenser is vented to the atmosphere.

Under all these conditions, the cooling systems are designed to assure that heat generated in the reactor core is removed and dissipated. During normal full power operation of 2255 Mwt at 1000 psig, the maximum fuel heat flux is approximately 349,000 Btu/hr-ft^2 and the maximum UO_2 temperature is 3725°F. Under these conditions the critical heat flux ratio is approximately 2.5. These thermal design parameters are conservative. (See Section IV-4).

Measurements of operating variables performed during the startup tests of boiling water reactors have revealed that, initially, considerable additional margin exists relative to the design assumptions. Most of this excess margin results from the initial ability to flatten the power distribution with control rods, achieving lower peaking factors than had been used in design. At the SENN plant, for example, the initial over-all peaking factor (excluding overpower) was measured to be 2.46, compared with the SENN design value of 3.12, and the design value for Dresden Units 2 and 3 of 3.0. Other plants have exhibited similar behavior. This initial excess margin of 25% can be expected to disappear by the end of the operating cycle. The withdrawal of control rods to compensate for fuel depletion causes the power peaking factors to approach the values assumed in design. A second source of Minimum Critical Heat Flux Ratio (MCHFR) margin in excess of that provided by the design criteria is the recirculation flow rate, which in operating BWR plants has always been observed initially to be larger than specified in the design. With power held constant, increasing flow increases the Critical Heat Flux Ratio (CHFR).

The reactor will benefit from improved measurement and calculational techniques and improved methods of control rod programming to minimize peaking factors, which are being developed in currently operating reactors. Furthermore, additional thousands of hours of operating experience will provide an improved basis for evaluation of operating uncertainties to be accounted for in the overpower allowance. All of these factors will result in reducing errors and operating uncertainties and increasing actual operating margins in this reactor. The established limit for Units 2 and 3 as well as Unit 1 and other General Electric boiling water reactors, is 1.5 MCHFR evaluated at a postulated design overpower condition. Perspective is gained by considering briefly the margin between the design limit and conditions required for actual fuel damage.

First, the maximum allowable heat flux at the assumed overpower condition is a factor of 1.5 below the critical heat flux design correlation. Second, the critical heat flux design correlation is conservatively drawn below all the experimental data points for critical heat flux, which, due to the distribution of data, is typically a factor of 1.5 below the best fit of the experimental data. Third, the occurrence of the critical heat flux results in a modest cladding temperature rise and does not correspond to fuel damage. Actual "burnout" or fuel damage would not occur until well into the film boiling mode of heat transfer, which would require a still higher heat flux than the CHF.

c. Control of Fuel Handling

(Same as Unit 2 PDAR as amended)

The equipment and procedures used in the handling and storage of fuel are designed to permit safe, efficient refueling of the reactor. Replacement fuel is stored in a concrete vault in the reactor building. The vault is provided with radiation monitors, and the storage design prevents criticality even if the storage vault were flooded with water. All entrances to the vault, including fuel delivery doors and personnel openings, are capable of being locked.

The fuel pool for storage of spent fuel assemblies is also located in the reactor building. The racks in which the fuel assemblies are placed are bolted to the floor and are designed to ensure subcriticality in the pool. The pool water removes heat and shields against radioactivity, both of which are generated by the decay of fission products in the stored fuel. Transfer of

irradiated fuel from the reactor core to the refueling pool is accomplished under water which provides shielding for operating personnel and prevents airborne contamination. The new and spent fuel assemblies are handled by special hoists, cranes and grapples during the refueling or maintenance work. Such equipment includes the building service crane, the refueling platform and hoists, reactor service platform, and the jib hoists. This equipment is designed with interlocks and special safety features to assure that fuel loading and handling can be conducted only under specific safe conditions.

d. Control of Radioactive Wastes

(Conforming amendment of Unit 2 PDAR required where indicated by ‡)

‡ Dresden Units 2 and 3 are designed to use the same radioactive waste control systems. The systems are designed to collect potentially radioactive wastes, and process and dispose of them in a safe manner without limiting overall plant operations or availability. Equipment, instrumentation, and operating procedures are designed so that the discharge of radioactive wastes will not exceed permissible levels. The liquid radioactive waste control system is designed to provide a means for processing potentially radioactive liquids, and to collect processed liquid wastes in batches which may be sampled and analyzed to determine their suitability for release through the discharge canal into the river. It is anticipated that the daily discharge
‡ concentration of liquid wastes from all three units averaged over a calendar year will be less than 10^{-8} μc/cc, which for the types of waste discharged, is a factor of approximately 10^3 less than waste concentrations permitted in 10 CFR 20.

‡ Gaseous wastes from Units 2 and 3 are discharged to the atmosphere through the same 310 foot stack. However, Unit 1 will use a separate stack. The combined maximum permissible gaseous wastes emission rates from both Units 2 and 3 stack and Unit 1 stack will not exceed the limit presently specified for Unit 1 only. This maximum permissible discharge rate was based on the permissible off site dose of 500 mrem/yr, and was determined by analysis which accounted for stack height, discharge velocity of gases from the stack, topography of the environment, and meteorological conditions at the site.

During the normal full power operation of the unit without significant escape of fission products from the fuel, the radioactive gases from Unit 3 discharged from the stack will consist principally of isotopes of nitrogen and oxygen at a rate of approximately 200 μc/sec. If fuel defects were to occur, the principal radioactive constituents in the stack discharge would consist of the noble gases. Based upon operating data from Unit 1 during a period when significant leakage from fuel rods occurred, the emission of gases from the stack resulted in an off site dose of approximately 5 mrem/yr. Any increase in off site doses from the addition of Units 2 and 3 is expected to be less than this amount, or the total off site dose from the combined operation of all units is expected to be less than one percent of the off-plant permissible annual dose.

e. Control of Radiation Levels and Personnel Exposures

(Same as Unit 2 PDAR as amended)

The unit is provided with two types of installed radiation monitoring systems which are utilized to maintain continuous surveillance and monitoring of the radiation levels associated with plant operations. The first type consists of several process radiation monitoring systems which

provide a continuous indication and record of radioactivity at or near the discharge point of those process lines that can release radioactive effluents to the environs directly. These monitors are capable of measuring the radioactive material content of such effluents to a sufficient degree of accuracy to indicate that maximum permissible release rates are not being exceeded. Provisions are also made for monitoring the various process systems in which radioactive fluids are normally contained or stored.

The second type is the area radiation monitoring system which provides a record of gamma radiation levels at selected locations within the various buildings. This system is also designed to alarm when radiation levels exceed preselected values.

Radiation shielding is included in the plant design to minimize the exposure of plant personnel to radiation emanating from the reactor, turbine, and their auxiliary systems as described in Section V-6.2.

The control room is shielded so that dose rates will not exceed 0.5 mrem/hr under normal operating conditions or 500 mrem in 8 hours under design accident conditions involving any of the units at the station.

The shielding and waste control systems are also designed so that the radiation dose to the general public, under any expected plant operation conditions, will be less than 5 mrem/yr.

5.3 Inherent Safety Features of the Reactor

(Same as Unit 2 PDAR as amended)

The boiling water power reactor has inherent safety features derived from the materials, configuration, and operating modes specified in the design. Many plant equipment failures and/or plant maneuvers are accommodated by the reactor without violation of normal steady state operating limits. The reactor characteristics of importance in this regard are:

a. The characteristically large and virtually instantaneous negative Doppler coefficient of reactivity of slightly enriched uranium dioxide fuel provides an inherent mechanism for terminating nuclear transients.

b. The steam void coefficient of reactivity, as in the case of Doppler, also provides a negative reactivity feedback which tends to limit power excursions and contributes to the overall plant stability. Voids and Doppler also tend to suppress peaks caused by improper rod withdrawal.

As an example of the benefits of the above nuclear characteristics, consider the loss of power to the pumps which supply the recirculation flow. If such loss were to occur at full power the reactor power would fall to a level consistent with the remaining natural circulation flow rate. No reactor scram would be necessary.

Another example of the self-limiting tendency of the reactor is the case of improper rod withdrawal during a startup. In the event that improper rod withdrawal should produce a rising period as short as one second, the excursion would be terminated at a low power level by Doppler and void feedback and no scram would be necessary to protect the fuel. In this case, however, a scram does occur as the result of action by the intermediate range instrumentation.

The manner in which these inherent safety features and other design features contribute to normal safe operation of the plant were discussed above. Summarized below are the safety features incorporated in the several engineered safeguards and in the containment systems.

5.4 Engineered Safeguards

(Same as Unit 2 PDAR as amended)

The plant control systems maintain plant variables within narrow prescribed limits. These systems are thoroughly engineered and backed up by a significant amount of experience in system design and plant operation. Even if an improbable operational error or equipment failure allows these variables to exceed their prescribed limits, an extensive system of engineered safeguards are provided to terminate the transient and limit the effects to levels far below those which are of concern. These engineered safeguards include those which back up plant control systems, those which offer additional protection against a reactivity excursion, those which act to prevent a loss of coolant, and those which provide core cooling in the event of a loss of coolant. The containment including its cooling and inerting systems, provide additional protection to the public.

A sufficient shutdown margin is maintained so that the reactor can be shut down in the cold condition with one control rod completely out of the core at any time in core life. The reactor can be shut down from operating power conditions with insertion of only a few rods because of the reduced reactivity due to hot fuel and moderator and to fission product neutron absorbers in the fuel. At any time during core life, many rods have to be withdrawn in order to bring the core critical.

In addition a completely redundant, separate and independent neutron absorbing shutdown system is supplied. The manually initiated standby liquid control system injects a neutron absorbing solution directly into the reactor moderator in quantity sufficient to shut the reactor down and maintain shutdown with the reactor in the thermally cold, fission product-free condition. This system would be used only in the highly unlikely event that control rods could not be inserted into the core.

The reactor protection system backs up the operational reactor power, pressure, water level, and radioactivity control systems. The reactor protection system automatically detects non-standard conditions and initiates reactor scram in time to provide protective margin against core damage. The system initiates such actions as reactor scram on high neutron flux, high pressure in either the reactor or drywell, high radiation in a steam line, or closure of the main steam line isolation valves. The equipment used in the reactor protection system, beginning with the sensors through the circuitry and including the solenoid operated scram pilot valves in the control rod hydraulic system, is highly reliable and duplicated to assure high probability of proper protective action.

Insertions of reactivity in excess of that provided to meet operational requirements are prevented by the limitations on control rod drive withdrawal speed and control of the rate of moderator temperature change. The designs of the control rod to control rod drive coupling and the control rod drive thimble preclude an equipment failure which could allow the control rod to be removed from the core more rapidly than the control rod drive normal withdrawal mode. Nevertheless, three engineered safeguards have been included as additional protection. The control rod drive thimble support structure would limit control rod drive thimble and control rod movement, so that negligible changes in core reactivity would result, even if the control rod drive thimble circumferentially ruptured. If a control rod were to become separated from its drive, stick within the core, and subsequently fall from the core, the "rod velocity limiter" would limit its free fall velocity. A rod worth minimizer computer limits the establishment of control rod configurations so that the maximum reactivity insertion rate resulting from the free fall of a control rod with a rod velocity limiter from the core would not cause damage to the primary system.

In addition to the normal core cooling provided by steam to the condenser, or by the shutdown cooling system, three backup cooling systems are provided. First, the isolation condenser system cools the core by passing steam to the isolation condenser and condensate back to the reactor vessel. This system provides closed circuit natural circulation and can function even if all ac electrical power is lost. Second, relief valves permit release of steam to the suppression pool, followed by return of water to the reactor vessel through the feedwater or control rod drive feed systems. And third, the core spray system is designed to remove decay heat from the core under loss of coolant accident conditions.

The piping at the reactor primary system is designed, analyzed, fabricated, and tested to prevent failure. Nevertheless, engineered safeguards have been provided to prevent release of harmful amounts of radioactive materials to the environs even if a pipe ruptures. If a pipe containing high pressure reactor water developed a significant rupture outside the primary containment, the rupture would be automatically detected and the isolation valves closed. The four large high pressure steam lines penetrating the containment have flow restrictors. If any such line were circumferentially ruptured, the flow restrictors would limit the coolant loss rate and the isolation valves would terminate the coolant loss so that no fuel damage would occur.

The reactor vessel and piping operate at 1000 psig, well below the design pressure of 1250 psig. The vessel and piping will be initially hydrostatically tested at 1560 psig. The initial pressure regulator, the bypass pressure regulator, the isolation condenser system, the relief valves, the safety valves and the reactor protection system operate to hold the system at operating pressure. Nevertheless, even if the piping ruptured inside the containment (where the coolant loss would not be terminated by closure of isolation valves), independent redundant core spray systems would limit fuel cladding perforation and prevent fuel melting. Either of two independent, full capacity core spray systems is capable of adequately cooling the core in the event of a recirculation line rupture. The core spray system design has been exhaustively tested and shown to be adequate to prevent fuel melting. In addition, the jet pump and core support structure act as a second vessel surrounding the core, allowing rapid reflooding of the core by the core spray system, and provides another mechanism of core cooling following a loss of coolant accident.

5.5 Containment

(Same as Unit 2 PDAR as amended)

The containment barriers are the basic features which minimize release of radioactive materials if other safeguards features should fail. Other design features are provided which help maintain the integrity of the containment barriers. A boiling water reactor provides seven containment barriers to mitigate the release of fission products: (1) the high density ceramic UO_2 fuel, (2) the high integrity zirconium cladding, (3) the reactor vessel and its connected piping and isolation valves, (4) the drywell suppression chamber primary containment, (5) the reactor building, (6) the reactor building standby gas treatment system utilizing high efficiency and charcoal filters, and (7) elevated discharge of gaseous effluents from a stack.

At operating temperatures, a high percentage of the fission products are retained in the uranium dioxide lattice, with less than one percent of the noble gas activity and less than 0.5 percent of the halogen activity located in the fuel rod plenums provided for gas accumulation. In addition, ceramic UO_2 is chemically inert to the cladding at operating temperatures and highly resistant to attack by water.

The zircaloy cladding provides the second barrier to fission product escape. The cladding is free standing (does not need internal support from fuel) at reactor operating temperature and pressure, and contains a gas space or plenum for accumulation of fission gases, mostly nonradioactive, which diffuse

from the UO_2 lattice. In experimental tests and operating experience in reactors, Zircaloy has demonstrated a high degree of corrosion resistance. The minimization of stresses, including a free standing cladding design and the intensive inspections and tests performed on the cladding material and completed fuel rods, further add to assurance of cladding integrity. In addition, the rigid environmental control in the reactor, minimizing thermal and pressure transients, increases the probability that the cladding integrity will be maintained.

The reactor vessel, its piping and isolation valves form the third barrier to fission product release. The reactor vessel and piping are high integrity vessels, designed and tested to appropriate ASME or ASA codes. A large number of years of design, fabrication, and operating experience with high pressure vessels constructed of the same materials provides a high degree of confidence that these vessels will perform without failure. The steam line radiation monitors, which automatically initiate isolation of the vessel on high steam line radioactivity, and the flow limiters in the steam lines prevent discharge of large amounts of radioactive materials from the reactor vessel.

As the fourth barrier to fission product release, the reactor is housed within a high integrity primary containment system designed to withstand coolant loss accidents and contain released fission products. The primary containment is of the pressure-suppression type which rapidly reduces containment pressure and the potential for fission product escape. Containment cooling systems are provided to further reduce the pressure.

The primary containment system is, in turn, contained within the reactor building (the secondary containment), which forms the fifth barrier to fission product release. Leakage from the primary containment passes into the interior of the reactor building. The reactor building is designed for low leakage.

The sixth barrier to fission product release is the reactor building standby gas treatment system, which exhausts building air through high efficiency and charcoal filters before elevated discharge to the environs from a stack, the seventh barrier. High drywell pressure or high radiation in the reactor building cause automatic actuation of the standby gas treatment system and isolation of the normal ventilation system. The filtration system would remove 99.9 percent of the haolgen and solid fission products from the discharged reactor building air. Release from the stack, rather than at ground level, minimizes the resulting doses to off-site persons regardless of atmospheric diffusion characteristics at the time.

During all phases of normal plant operation there is no need for containment systems. If the containment systems did not exist, the normal radiation exposures to the operating personnel and to the public would be no greater than those discussed above in Section I-5-2, "Normal Plant Operation." However, as a further backup safety feature, and in addition to the other engineered safeguards which are provided, the plant design includes a multiple barrier containment system whose primary function is to mitigate rapidly the consequence of postulated accidents involving the reactor and its various systems.

a. Primary Containment System

(Same as Unit 2 PDAR as amended)

The primary containment design employs a pressure suppression containment system which houses the reactor vessel, the reactor coolant and recirculating loops, and other service loops connected to the reactor. The pressure suppression system consists of a drywell, a pressure suppression chamber which stores a large volume of water, a connecting vent system between the drywell and the water pool, isolation valves, containment cooling systems,

and other service equipment. In the event of a process system piping failure within the drywell, reactor water and steam would be released into the drywell air space. The resulting increased drywell pressure would then force a mixture of air, steam, and water into the pool of water which is stored in the suppression chamber. Appropriate isolation valves are actuated during this period to ensure containment of radioactive materials within the primary containment during the course of the accident. Cooling systems are provided to remove heat from the reactor core, the drywell, and from the water in the suppression chamber and thus provide continuous cooling of the primary containment under accident conditions.

The primary containment system is fabricated as two large pressure vessels and is designed to withstand the peak pressures which could occur due to the postulated rupture of any reactor primary system pipe inside the drywell. For the drywell and suppression chamber the design pressure is 62 psig. These vessels and their penetrations are designed to rigid specifications so that the design leakage rate under the accident conditions does not exceed approximately 0.5% of the containment volume per day.

b. Secondary Containment System

(Conforming amendment of Unit 2 PDAR required where indicated ‡)

‡ A reactor building completely encloses the Unit 2 and Unit 3 reactors and their respective and
‡ independent pressure suppression primary containments. This structure provides secondary containment when the primary containment is in service, and provides primary containment during periods when the pressure suppression containment system is open. The structure
‡ simultaneously provides Units 2 and 3 with any combination of the above containment functions
‡ as may be required during the operation of the two units. From a safeguards consideration, the principal purpose of the secondary containment is to minimize ground level release of airborne radioactive materials and to provide for controlled, decontaminated elevated release of the building atmosphere under accident conditions. To accomplish this, the secondary containment system is provided with four principal design features. First, leakage from the primary containment is directed into the secondary containment. Second, under accident conditions, the secondary containment is maintained at a negative pressure with respect to the outside atmosphere so that leakage from the building does not occur at ground level. Third, the building is designed relatively leak-free, so that when subjected to a negative pressure of 0.25 inch of water, its in-leakage rate is not greater than 100 percent of the building volume per day under neutral wind conditions. Fourth, any exhaust air from the building due to in-leakage under accident conditions is passed through a series of high efficiency particulate and
‡ halogen filters before discharging the ventilation gases through the 310 foot stack. The building leak-tightness and the performance of the filters are capable of being tested periodically.

The ability of these containment systems to mitigate the consequences of accidents has been analyzed by evaluating a variety of postulated equipment and component malfunctions, operator errors, and system accidents. The calculated consequences are discussed in Section XI for those design basis accidents which have the greatest potential for release of radioactive materials to the environment. The doses are substantially less than those reference doses given in 10 CFR 100.

5.6 Training and Operating Procedures

(Same as Unit 2 PDAR as amended)

Station personnel have acquired more than 500 man years of operating experience on Unit 1 and will receive additional training for operation of the proposed unit prior to the startup. The original plant start-up will be conducted by the applicant under the direction of technically qualified General Electric Company personnel, who have directed the startup of other boiling water reactors.

Plant startup, operation and shutdown will be conducted according to written operating instructions to assure that prescribed safety and operating margins are maintained.

Periodic testing of certain reactor equipment, containment systems, instrumentation and interlocks will be performed to assure their proper functioning.

6.0 SUMMARY OF OFF-SITE DOSES

(Conforming amendment of Unit 2 PDAR required where indicated by ‡)

The radioactive waste control systems for the combined normal operation of Dresden Units 1, 2, and 3 are designed to limit the radiation exposure of the neighboring population to levels significantly below those doses set forth in 10 CFR 20 as presented below (6.1). The expected maximum concentrations and discharge rates of radioactive waste effluents, and the calculated off-site doses under various abnormal operations (postulated accidents) are discussed below (6.2).

6.1 Normal Operations

The air ejector off-gas system for Dresden Unit 3 is designed so that the aggregate release of radio-
‡ active materials from Dresden Units 1, 2, and 3 does not exceed the stack release limit prescribed in AEC Facility License DPR-2, as amended, which currently govern the operation of Dresden Unit 1 only. Based upon operating experience from Dresden Unit 1, it is anticipated that the annual dose to any person off-site arising from operation of both Units will not be greater than about 1/100 of the maximum allowable annual dose of 500 mrems/yr, specified by 10 CFR 20. (Refer to Section VI-3.0.)

‡ The liquid radioactive waste from Dresden Units 2 and 3 is contained in the 940,000 gpm circulating cooling water which is returned to the river. The estimated maximum permissible discharge rate is
‡ 54×10^4 μc/cc for unidentified radioisotopes in the effluent circulating water, in accordance with 10 CFR
‡ 20. The average daily discharge is estimated to be on the order of 0.12 curies, which is approximately one-fourth of that permissible under 10 CFR 20. Additional dilution of liquid radioactive wastes in the river further reduces the activity concentrations such that liquid radioactive waste concentrations in the
‡ river are on the order of 10^{-2} to 10^{-3} of the maximum permissible concentrations for the mixtures discharged. (Refer to Section VI-2.0)

6.2 Abnormal Operations

A variety of postulated equipment and component malfunctions, operator errors, and system accidents have been analyzed to evaluate the maximum extent of potential off-site dose consequences. Table I-3 is a summary of the major postulated accidents which have the greatest potential for release of radioactive materials to the environment. (Refer to Section XI.)

‡ TABLE I-3

SUMMARY OF MAXIMUM OFFSITE DOSES FROM POSTULATED ACCIDENTS

ACCIDENT		MAXIMUM TOTAL OFF-SITE EXPOSURE - RADS	
		Whole Body	Thyroid
Rod Drop	44×10^3 curies noble gases 2.0 curies halogens released to condenser	3.1×10^{-2}	1.7×10^{-2}
Fuel Loading	1.1×10^{-4} curies noble gases 7.2×10^3 curies halogens released to reactor water	3.2×10^{-2}	2.8×10^{-1}
Steam Line Rupture	4.4 curies noble gases 72 curies (principally) halogens released into air	6.8×10^{-6}	3.2×10^{-2}
Loss of Coolant	1.4×10^6 curies noble gases 0.14×10^6 curies halogens airborne in primary containment at 30 minutes	4.2×10^{-4}	5.4×10^{-4}
Loss of Coolant (100 percent melt)	3.1×10^8 curies noble gases 3.0×10^7 curies halogens 1.0×10^8 curies volatile solids 1.3×10^7 curies other solids airborne in primary containment at 30 minutes	1.5×10^{-1}	2.1×10^{-1}

‡ 7.0 INTERACTION OF UNITS 1, 2 AND 3

(Conforming amendment of Unit 2 PDAR required where indicated by ‡)

The criteria followed in designing Units 2 and 3 for installation adjacent to the present Unit 1 is that each unit would operate independently of the other two units. A malfunction of equipment or operator error in any of the three units will not affect the continued operation of the remaining two units. A high degree of station reliability is accrued from the standpoint of continuity of power for the operation of standby equipment through the operation of a multi-unit generating station.

7.1 Gaseous Waste Effluents

‡ The 300 foot stack built for Unit 1 is used to discharge Unit 1 off-gas and reactor building and turbine
‡ building ventilation air. A 310 foot stack will discharge Units 2 and 3 off gas, a portion of the radwaste and
‡ turbine building ventilation air and the effluent from the standby gas treatment system. The current stack
‡ release limits set forth in the Dresden Unit 1 Facility License DPR-2, as amended, will apply to aggre-
‡ gate releases from Units 1, 2 and 3.

The stack release control is accomplished by use of the air ejector off-gas instrumentation and the stack gas monitors, as follows:

A. Unit 1

(1) Off-gas:

Continuous monitoring of the Unit 1 air ejector off-gas radioactivity level; indication, recording and high level annunciation in the control room; high level trip closing the off-gas system isolation valve.

(2) Stack-gas:

Continuous monitoring of Unit 1 stack gas radioactivity level and indication and recording
‡ in the Unit 1 control room; summation of the stack gas radioactivity levels from the Unit 1
‡ stack and from the Units 2 and 3 stack, and indication, recording and high level annunciation
‡ in the Unit 1 control room.

B. Unit 2

(1) Off-gas:

Continuous monitoring of the Unit 2 air ejector off-gas radioactivity level; indication, recording and high level annunciation in the control room; high level trip closing the off-gas system isolation valve.

(2) Stack gas:

‡ Continuous monitoring of the Units 2 and 3 stack gas radioactivity level, indication, recording
‡ and high level annunciation in the Unit 2 control room.

‡ Indications of the summation of the Unit 1 and the Unit 2 and 3 stack gas radioactivity level.

C. Unit 3

(1) Off-gas

Continuous monitoring of the Unit 3 air ejector off-gas radioactivity level; indication, recording and high level annunciation in the control room; high level trip closing the off-gas system isolation valve.

(2) Stack-gas

‡ Continuous monitoring of the Units 2 and 3 stack gas radioactivity level, indication, recording
‡ and high level annunciation in the Unit 3 control room.

‡ Indications of the summation of the Unit 1 and Unit 2 and 3 stack gas radioactivity level.

7.2 Liquid Waste Effluents

The Unit 1 turbine condenser will continue to obtain river water from its own intake structure and
‡ canal. Units 2 and 3 share a new intake structure and canal for river water to their respective turbine
‡ condensers. However, Units 2 and 3 will each have their own circulating water systems. Both Unit 1
‡ and Units 2 and 3 intake canals obtain their water from the Kankakee River.

‡ Units 2 and 3 will use a single discharge canal separate from that of Unit 1; however, this canal
‡ will be combined with the Unit 1 canal at the point of discharge to the Illinois River. Here, as in the case of the intake canals there is no effect on operation of one unit on the others, except that the discharge of liquid waste effluents from the three units must be coordinated. Such coordination poses no special problem. Unit 1 will continue to have its own radioactive waste facility. Liquid wastes from either radioactive waste facility is discharged on a batch basis. The capability for limiting the aggregate discharges of liquid wastes within limits now applicable solely to Unit 1 will be provided. This limit meets the requirements of 10 CFR 20 and the State of Illinois regulations. The activity level of the circulating water discharge from Units 1, 2 and 3 is monitored and recorded.

7.3 Unit Auxiliary Power Supplies

The Unit 1 auxiliary power supply is split between the unit auxiliary power transformer, which is connected to the generator leads, and the reserve auxiliary power transformer, which is connected to the 138Kv bus at Dresden; either transformer has sufficient capacity to carry the total auxiliary power requirements of the Unit. The normal auxiliary power supply for Unit 2 is split between the unit auxiliary power transformer, which is connected to its generator leads, and the reserve auxiliary power transformer, which is connected to the 138Kv bus at Dresden, by means of duplicate conductors permitting connection to either of two bus sections. Either transformer has sufficient capacity to carry the total auxiliary power requirements of the unit.

The normal auxiliary power supply for Unit 3 is split between the Unit auxiliary power transformer, which is connected to the generator leads, and the reserve auxiliary power transformer, which is connected to the 345Kv bus at Dresden; either transformer has sufficient capacity to carry the total auxiliary power requirements of the unit. Therefore, the reserve auxiliary power requirements for Units 2 and 3 are obtained from two different transmission systems; the 138 Kv system and the 345 Kv system.

7.4 Common Auxiliary Systems

In those instances where a system serving a unit is interconnected with its counterpart in one or both of the other two units, the effect of the intertie upon the function of each system has been evaluated to

assure that the criteria as stated in 7.0 has not been compromised. On some systems the effect of an intertie is beneficial to both units since it provides additional redundancy of equipment.

7.4.1 Fire Protection Systems

‡ The fire protection systems of all three units are interconnected. Therefore, through the use of
‡ cross-tie valving and the additional pumping capacity, the protection afforded to each unit is increased.

7.4.2 Service Air Systems

‡ The service air systems of all three units are interconnected. Therefore, through the use of cross-tie valving and the additional compressor capacity, further redundance of equipment is provided. The service and instrument air systems in the Units 2 and 3 areas of the plant are each served by their own air compressor. For Unit 1, there is a separate instrument air system with three compressors, normal operation requires one compressor in service. Since Unit 1 has excess compressor capacity, the cross-
‡ tie provides a backup air supply for both Units 2 and 3. The cross-ties also provide operating flexibility between the three units with regard to maintenance of the service air compressors on any of the units. The only reactor system equipment operated by this air system are valves, which "fail-safe". Loss of instrument and service air causes safe plant shutdown.

7.4.3 Service Water System

‡ Although the service water system is a Unit 2 and 3 combined facility, the system is split permitting
‡ separate system operation for each unit. A common 50% capacity backup is provided. There is no cross-tie with the service water system of Unit 1.

7.4.4 Reactor Building Closed Cooling System

‡ There are interconnections between Units 2 and 3 reactor building closed cooling systems. The operating flexibility of both cooling systems is enhanced by the use of interties. There is no cross-tie with the Unit 1 reactor enclosure closed cooling system.

‡ Units 2 and 3 are each provided with one full capacity containment cooling system. A spare contain-
‡ ment cooling system of full capacity provides a common backup for each unit. The spare containment
‡ cooling system is, therefore, tied on the suction side to both suppression chambers and on the discharge
‡ side to both drywells. However, each line is double valved, with the valves electrically interlocked so the
‡ spare containment cooling system is available for only one unit at a time.

7.4.5 Turbine Building

‡ The Units 2 and 3 turbines are housed in a single turbine building. The turbine building supply and
‡ exhaust ventilation systems are operated as a combined system.

7.4.6 Reactor Containment

‡ Units 2 and 3 have separate primary containments and pressure suppression systems. The secondary
‡ containment for each unit is constructed to serve its own unit; however, the secondary containment will
‡ eventually be combined above the operating floor. Both Units share the same standby gas treatment, venti-
‡ lation and heating systems, each having capacities to accommodate the combined secondary containment volume.

7.4.7 Makeup Demineralizer Water System

‡ The make-up demineralizer water system capacity is increased by 100%. The present Unit 1 make-
‡ up system and the new make-up system are operated in parallel to serve all three units. Both make-up
‡ demineralizers obtain water from the 200,000 gallon well water tank. This demineralized water is dis-
‡ charged either to the two existing 200,000 gallon tanks on Unit 1 or to the two 250,000 gallon tanks which
‡ serve both Units 2 and 3. The operation of the make-up demineralizers as one system do not raise any safety or operational prpblems since the history of Unit 1 has demonstrated that water make-up requirements are extremely small.

7.4.8 Control Rooms

‡ The control rooms for Units 1, 2 and 3 will be adjacent and open to each other. The equipment and panels are arranged and spaced so that each control room occupies a definite and separate area.

7.4.9 Miscellaneous Common Facilities

‡ Several facilities common to Units 1, 2 and 3, or Units 2 and 3, which are necessary, but are not critical to the safe start-up, operation and shut-down of the plant, are listed below:

a. Administration building

b. Access control building

c. Machine shop

d. Laundry

e. Gatehouse and security fencing

f. New fuel storage (Units 2 and 3)

7.5 Inter-Plant Effects of Accident

An accident in any one of the units, up to and including the maximum postulated accidents, will not prohibit control room access or prevent safe operation or shutdown of the other units. Because the major
‡ fraction of the fission products from a postulated accident at Unit 2 or 3 are retained within the shielded
‡ primary containment system, a loss of coolant accident on Unit 2 or 3 would result in even lower radiation
‡ levels in the control room than an accident on Unit 1. Even following a Unit 1 loss of coolant, safe control
‡ room access and habitation are not prevented and the functions necessary to safe operation or shutdown
‡ of Units 2 or 3 can be adequately performed.

8.0 NEW PLANT FEATURES

(Same as Unit 2 PDAR as amended).

The design of the proposed unit includes certain features which have been added to improve the safeguards or operation. These features have been developed by the General Electric Company for use in the current generation of nuclear plants now being designed and constructed. These new features are discussed below, and references are given to further discussion, in other sections of this report.

8.1 Plant Features Which Reduce the Probability for and Magnitude of Potential Reactivity Insertion Accidents

The design includes features to limit the maximum control rod worth, and to prevent rapid insertion of reactivity, thereby limiting the probability of occurrence and magnitude of postulated reactivity excursion accidents.

These features include the following:

a. Control Rod Worth Minimizer (Section X-3.0)

b. Rod Velocity Limiter (Section X-3.0)

c. Control Rod Drive Thimble Support (Section X-3.0)

The control rod worth minimizer is a computer system which limits the maximum control rod worth to about 0.025 Δk. The rod drop velocity limiter restricts the free-fall velocity of a control rod to a maximum of about 5 feet/second. The control rod drive thimble support prevents the ejection of a control rod if the control rod drive thimble were to fail.

8.2 Plant Features Which Mitigate Effects of Postulated Coolant Loss Accidents

The reactor vessel internal components, the core and containment cooling systems, and the main steam piping have been designed to assure continuity of cooling to the core and containment during and following postulated coolant loss accidents.

The following components or design features are included in this category:

a. Flow Restrictors in the Main Steam Lines (Section V-5.0)

b. Jet Pumps and Rearrangement of Reactor Vessel Internal Structure (Section IV-6.0)

c. Core Spray Systems (Section V-3.0)

d. Core Reflooding Capability (Section V-3.0)

e. Containment Spray Systems (Section V-3.0)

f. Control of Containment Atmosphere (Section V-3.0)

The flow restrictors are venturi nozzles which are installed in the main steam lines to limit the maximum steam flow rate in the line if the line were to break.

The jet pumps are an improved mechanism for providing reactor coolant flow. The jet pumps and attendant reactor vessel internal configuration allow reflooding of the core following a loss-of-coolant accident. The core spray systems provide the cooling water necessary to cool and reflood the core following loss-of-coolant.

The containment spray systems provides another independent means for removing thermal energy from the primary containment following an accidental coolant loss. Control of the containment atmosphere is maintained to prevent the burning of any hydrogen released during the accident.

8.3 Plant Features Which Improve Operability of the Unit

The design features are included which contribute to operational control These include:

a. Recirculation Flow Control System (Section X-3.0)

b. In-Core Neutron Monitor System (Section X-3.0)

The recirculation flow control system provides a method for adjusting the output of the unit over a power range of approximately 30 percent. The in-core monitors provide operational input data for core performance evaluation and for signals in the reactor protection system.

9.0 IDENTIFICATION OF CONTRACTORS

(Conforming amendment of Unit 2 PDAR required where indicated by ‡)

As owner, Commonwealth Edison Company has engaged, or approved the engagement of, the contractors identified below in the construction of Unit 3. However, irrespective of the explanation of contractual arrangements offered below, Commonwealth is the sole applicant for the construction permit and operating license for Unit 3 and as owner and applicant is responsible for the design, construction and operation of Unit 3.

The Unit 3 addition to the Dresden Nuclear Power Station will be designed and built by General Electric Company as prime contractor for Commonwealth Edison Company. General Electric has undertaken to provide a complete, safe, and operable nuclear power plant ready for commercial service in February, 1970. The project will be directed by General Electric from the offices of its Atomic Power Equipment Department in San Jose, California, and by General Electric representatives at the plant site during construction and initial plant operation. General Electric has engaged the architect-engineering services of Sargent and Lundy, Incorporated, Chicago, Illinois, to provide the design of the non-nuclear portions of the power plant and to prepare specifications for the purchase and construction thereof. Commonwealth will review the designs and construction and purchase specifications prepared by Sargent and Lundy and General Electric to assure that the general plant arrangements, equipment and operating provisions will be satisfactory to it.

‡ The plant will be constructed under the general direction of General Electric and through a construction management organization at the site, United Engineers and Constructors, Inc., utilizing appropriate construction, erection, and equipment subcontracts. Preoperational testing of equipment and systems and initial plant operation will be performed by Commonwealth personnel under the technical direction of General Electric. Personnel to be provided by Commonwealth for plant operation will be drawn largely from its experienced operating staff of Dresden Unit 1, trained and qualified in the startup and several years of operational experience of this boiling water reactor. The plant will be turned over to, and responsibility for its subsequent operation will be assumed by, Commonwealth after completion of a demonstration of plant operational capability at a specified plant output.

II. PRINCIPAL ARCHITECTURAL AND ENGINEERING CRITERIA FOR DESIGN

II. PRINCIPAL ARCHITECTURAL AND ENGINEERING CRITERIA FOR DESIGN

(Same as Unit 2 PDAR as amended)

The principal architectural and engineering criteria for design for the plant are summarized below. The specific architectural and engineering criteria and design features are detailed in later sections.

1.0 PLANT DESIGN

Principal structures and equipment which may serve either to prevent accidents or to mitigate their consequences will be designed, fabricated and erected in accordance with applicable codes and to withstand the most severe earthquakes, flooding conditions, windstorms, ice conditions, temperature and other deleterious natural phenomena anticipated at the site during the lifetime of this unit.

1.1 Containment

1. The primary containment, including the drywell, pressure suppression chamber, associated access openings and penetrations, will be designed, fabricated and erected to accommodate, without failure, the pressures and temperatures resulting from or subsequent to the double-ended rupture or equivalent failure of any coolant pipe within the drywell.

2. Provisions will be made both for the removal of heat from within the primary containment and for such other measures as may be necessary to maintain the integrity of the containment system as long as necessary following a loss of coolant accident.

3. The reactor building, encompassing the primary containment system, will provide containment when that system is open and secondary containment when the primary containment system is closed.

4. Provision will be made for initial preoperational pressure and leak rate testing of the entire primary containment system and for leak rate testing at periodic intervals after the facility has commenced operation. Provision will also be made for demonstrating the functional integrity of reactor building containment.

5. The integrity of the complete containment system and such other engineered safeguards as may be necessary will be designed and maintained so that off-site doses resulting from postulated accidents will be below the values stated in 10 CFR 100.

1.2 Reactor System

1. A direct-cycle boiling water reactor will be employed to produce steam at 1000 psig for use in a steam-driven turbine-generator. The reference design thermal output of the reactor is approximately 2255 MWt.

2. The reactor will be fueled with slightly enriched uranium dioxide contained in zircaloy clad fuel rods.

3. The minimum critical heat flux ration and maximum fuel center temperature evaluated at the design overpower condition will be below values which could lead to rod failures.

4. Fuel rod cladding thickness will be designed to maintain cladding integrity throughout the anticipated fuel life. Fission gas release within the rods and other factors affecting design life must be considered for the maximum expected exposures.

5. The reactor and plant will be designed so that there will be no inherent tendency for undamped oscillations.

6. The reactor will be designed to accommodate tripping of the turbine-generator, loss of power to the reactor recirculation system and other station transients and maneuvers which might be expected without compromising safety and without fuel damage.

7. The reactor will include separate systems including overpressure scram, the isolation condenser, safety valves, and turbine bypass, to prevent serious primary reactor system overpressure.

8. Power excursions which could result from any credible reactivity addition accident will not cause damage, either by motion or rupture, to the pressure vessel or impair operation of required safeguards.

9. Heat removal systems will be provided which are capable of safely accommodating core decay heat under all credible circumstances, including isolation from the main condenser and loss of coolant from the reactor. Each different system so provided will have appropriate redundant features.

10. Reactivity shutdown capability shall be provided to make and hold the core adequately subcritical, by control rod action, from any point in the operating cycle and at any temperature down to room temperature, assuming that any one control rod is fully withdrawn and unavailable for use.

11. Redundant backup reactivity shutdown capability will be provided independent of normal reactivity control provisions. This system will have the capability, with adequate margin, to shut down the reactor from any operating condition.

1.3 Control and Instrumentation

1. The plant will be provided with a centralized control room having adequate shielding to permit occupancy during all design accident situations.

2. There will be sufficient interlocks or other protections so that procedural controls are not the only means of preventing serious accidents.

3. A reliable reactor protection system will be provided to automatically initiate appropriate action whenever plant conditions approach pre-established limits. Periodic testing capability will be provided. Sufficient redundancy will be provided so that failure or removal from service of any one component or portion of the system will not preclude scram or actuation of other protective devices when required.

1.4 Electrical Power

Sufficient normal and emergency auxiliary sources of electrical power will be provided to assure a capability for prompt shutdown and continued maintenance of the plant in a safe condition under all credible circumstances.

1.5 Radioactive Waste Disposal

1. Gaseous, liquid and solid waste disposal facilities will be designed so that discharge of effluents and off-site shipments shall be in accordance with 10 CFR 20.

2. Process and discharge streams will be appropriately monitored and such automatic features incorporated as may be necessary to prevent releases above the permissible limits of 10 CFR 20.

1.6 Shielding and Access Control

The radiation shielding in the unit and the station access control patterns will be such that the doses shall not exceed those specified in 10 CFR 20.

1.7 Fuel Handling and Storage

Appropriate fuel handling and storage facilities will be provided to preclude accidental criticality and to provide cooling for spent fuel.

III IDENTIFICATION OF MAJOR FEATURES OR COMPONENTS RESPECTING WHICH FURTHER INFORMATION IS REQUIRED

III IDENTIFICATION OF MAJOR FEATURES OR COMPONENTS RESPECTING WHICH FURTHER INFORMATION IS REQUIRED

1.0 DEVELOPMENT PROGRAMS

(Same as Unit 2 PDAR as amended)

Notwithstanding the successful operation of a number of boiling water reactors which demonstrates that existing technology respecting such reactors is sufficient to give reasonable assurance that a reactor designed and constructed as proposed herein can be safely operated, nevertheless General Electric has undertaken several development programs with the intent of demonstrating the feasibility of additional or improved features of system design and procedures. Such features are to be incorporated in the unit design and operation. Accordingly, the development programs will relate specifically to their respective application as described herein as well as to other boiling water reactors under construction, e.g., Oyster Creek and Nine Mile Point.

The programs include:

a. Standby Core Cooling Methods

b. Control Rod Worth Minimizer

c. Incore Neutron Monitor Systems

d. Rod Velocity Limiter

e. Core Analytical Methods

f. Jet Pump Development

1.1 Standby Core Cooling Methods

Work will be continued on the development of methods that can be used for the application of alternate core cooling with the loss of coolant. Analytical and test work are currently under way to optimize the systems for the Tarapur, Oyster Creek and Nine Mile Point Reactors. Application of these standby core cooling systems to this reactor will be based on the results of the development work.

The test effort is directed towards establishing the water quantity requirements for spray cooling in a multi-rod heated fuel assembly, the effectiveness of partial reflooding in the same fuel assembly, the influence of spray angle, and the channel-to-channel distribution requirements.

1.2 Control Rod Worth Minimizer

Development effort is currently under way on a means of monitoring the control rod positions to establish, by comparison to a pre-determined control rod worth pattern, the limits of withdrawal or insertion of a particular rod. The control rod worth minimizer prevents a control rod withdrawal or insertion that would result in a control rod worth more than the pre-determined values.

The system consists basically of the rod positon sensing devices, a small computer capacity, and the interlock devices to prevent rod withdrawal. It will have been tested, installed and in operation on the Tarapur, Oyster Creek and Nine Mile Point reactors prior to its use on this unit as described in Section X. 3. 1. 4. A prototype system was installed in early 1965 in Dresden Unit 1 for test purposes.

1. 3 Incore Neutron Monitor System

Incore startup and power neutron detectors have been developed to reduce neutron source requirements and to improve neutron flux monitoring capability in the startup and power ranges. The detectors are fission chambers.

Power range incore detectors have been operating satisfactorily in the Dresden Unit 1 reactor since its initial startup. These detectors still demonstrate adequate sensitivity. Similar detectors to be used are described in Section X-4. 3. 3.

The startup range incore detectors (described in Section X-4. 3. 1) are slightly larger and more sensitive than the power range detectors and can be withdrawn from the core during full power operation. The use of miniature incore fission chambers as counting chambers in the startup range requires service tests of the chambers and counting circuitry to demonstrate their performance and reliability in an operating reactor. This testing is presently being done in the Consumers Power Company's Big Rock Point reactor. The incore detectors in that reactor have given excellent results and demonstrated satisfactory sensitivities in repeated counting cycles through subcritical and critical operation. The next phase of testing is to verify counting ability during hot start-up after a scram. A life test will also be conducted to demonstrate the feasibility of leaving the chambers in the high flux regions continuously. Identical chambers will have been in operation in both Jersey Central Oyster Creek reactor and Niagara Mohawk's Nine Mile Point Plant for approximately two years before this plant is operational.

1. 4 Rod Velocity Limiter

The rod velocity limiter is a device,which has been designed,and is being tested, that will reduce the free-fall velocity of a control rod. The device is functionally designed to have maximum hydraulic drag traveling in the downward or withdrawal direction and minimum drag in the upward or shutdown direction. The use of this device on other reactors will precede the application described herein (Section X-3. 1. 4).

1. 5 Core Analytical Models

Analytical models for the prediction of the nuclear and physical consequences of high reactivity addition rate accidents, such as control rod dropout, are continually being improved as a result of a continuing development program in this field. These models are checked against experimental data obtained from transient tests conducted in the AEC's SPERT facilities with uranium dioxide fuel. Present models accurately predict the consequences of accidents up to the threshold of fuel damage, which is as far as the SPERT tests have gone to date. It is expected that analytical development and verification of models can be completed when SPERT capsule tests, which are planned for the near future, are completed.

1. 6 Load Control by Use of Variable Speed Recirculation Pumps

The recirculation flow control system is in the stage of engineering application and requires no further development work. Past experience in the Dresden Unit 1, Consumers, and SENN plants has given information for designing and analyzing the flow control system.

Present design effort is directed toward the selection of high quality equipment and proper analytical modeling of the equipment and system. The analysis of the system is incorporated into the analytical model of the complete unit. The present pump controller utilizes an open loop type control system.

1.7 Systems Stability Analysis

This work has been in progress and will be continued to assure that the reactor systems have accepted dynamic response. Thermal-hydraulic dynamic response models have been developed to predict system performance. These models must be revised to account for the innovations that are incorporated in the boiling water reactors as progress is made.

1.8 Jet Pump Development

Considerable analytical and test work has been completed on the jet pump system for reactor coolant recirculation to enable their incorporation in current designs with confidence. The jet pump system to be installed is described in Appendix A. Development programs in progress and planned include:

a. Erosion tests on pump materials.

b. Analysis to improve the pump efficiency by decreasing mixing losses.

c. Optimization of design parameters such as length-to-diameter ratio of the throat, number of nozzles, holes and surface finish.

d. Optimization of size versus number of pumps for a given recirculation system.

e. Perform reduced scale model tests of the jet pump configuration to establish performance characteristics and establish the scale-size influence on jet pumps at M ratios close to unity.

f. Multi-unit test performed hot using two or three scale model jet pumps to determine multi-unit performance. The test will include rated and partial flow conditions. During these tests, effects of variations in sub-cooling, carry-under, static head and load sharing will be studied.

g. Full scale test performed at reactor operating conditions using a full size jet pump design to confirm expected performance.

2.0 REQUIREMENTS FOR FURTHER TECHNICAL INFORMATION

The following is a summary of the major features or components for which further technical information will be provided as it becomes available. As applied here, a feature or component is regarded as "major" if its malfunction could possibly cause a hazard to the health and safety of the public.

a. The reference design includes several features which are provided to prevent excessive excursion energy additions to the core. Excessive is construed to mean energy addition on the order to 425 cal/gm UO_2 as discussed in Appendices C and D. The features or components which will be provided to prevent such energy additions include a control rod worth minimizer, a rod velocity limiter, and a mechanical means to preclude rod control ejection accidents. Additional technical information will be submitted on each of these features.

b. Laboratory tests are currently being conducted to ascertain the appropriate conditions which must be obtained to assure the effectiveness of the core spray systems. Pertinent technical information resulting from the tests will be submitted.

c. The design of the control system will include an interlock system to prevent cooling conditions that would lead to fuel damage at low recirculation flows. When the type of interlock or automatic reset to be utilized in the design has been determined, such information will be submitted.

d. Various methods of measuring reactor recirculating system flow rates will be studied to determine the optimum method required to assure that specified core flow is maintained during unit operation. When the final method has been selected, this information will be submitted.

IV. REACTOR DESIGN

IV. REACTOR DESIGN

1.0 SCOPE

(Conforming amendment of Unit 2 PDAR required where indicated by ‡)

The purpose of this section is to state the principal safety-related core performance objectives and to describe how the core components will be sized to meet these objectives. Descriptions of the nuclear, thermal hydraulic and mechanical characteristics of the initial load fuel are presented. In addition, a functional description of the reactor control systems and other reactor vessel internal components are given. The mechanical design of such control systems is described in Section X. The mechanical details of the other reactor vessel internal components are given in Section IV-6.0.

It should be noted that the core description which follows is for a reference design, and changes may be anticipated as detail design progresses. Any change that may be made will be made within the intent of stated performance objectives related to safety.

The reference design does not specifically represent the final operational conditions, nor does it represent proposed limits for operation of the unit. Data to establish specific operational parameters will be presented after the detailed design is complete.

Table IV-1 describes the reference core design and presents the principal performance data for operation at 2255 MWt, the "Reference Design Thermal Output".

TABLE IV-1

REFERENCE CORE DESIGN DATA

Fuel Rod, Cold	
Fuel Pellet Diameter	0.488 in.
Cladding Thickness	0.036 in.
Cladding Outside Diameter	0.570 in.
Active Fuel Length	144 in.
Fuel Material	UO_2
Cladding Material	Zircaloy-2.
Fuel Assembly	
Number of Fuel Assemblies	724
Fuel Rod Array	7 x 7
‡ Fuel Rod Pitch	0.738 in.
Weight of UO_2 per Fuel Assembly	492.7 lbs
Fuel Channel Material	Zircaloy-4
Control System	
Number of Movable Control Rods	177
Shape of Movable Control Rods	Cruciform
Pitch of Movable Control Rods	12.0 in.
Control Material in Movable Control Rods	B_4C granules
Number of Temporary Control Curtains	324
Shape of Temporary Control Curtains	Flat Sheets
Curtain Material	Natural Boron-Stainless Steel
Location of Temporary Control Curtains	Between fuel assemblies in water gap without control rods

TABLE IV-1 (CONT)

Core	
Equivalent Core Diameter	182.2 in.
Circumscribed Core Diameter	189.7 in.
THERMAL AND HYDRAULIC DESIGN	
General Operating Conditions	
Reference Design Thermal Output	2255 MWt
Reactor Pressure	1000 psig
‡ Steam Flow at Full Power	8.62×10^6 lb/hr
Recirculation Flow Rate at Full Power	98.0×10^6 lb/hr
Feedwater Temperature	330.4°F
Total Fraction of Heat Generated in Fuel	96%
Power Density	36.7 kw/liter
‡ Heat Transfer Surface Area	63,527 ft^2
Average Heat Flux	116,300 Btu/hr-ft^2
Maximum Heat Flux	349,000 Btu/hr-ft^2
Maximum UO_2 Temperature	3,725°F
Minimum Critical Heat Flux Ratio at Overpower, equal to or greater than	1.5
Average Fuel Rod Surface Temperature	558°F
Average Volumetric Fuel Temperature	1000°F
Coolant Temperature at Core Inlet	530.4°F
Core Subcooling	20.4 Btu/lb
Core Average Voids of Coolant Within Assemblies	37%
Core Average Exit Quality of Coolant Within Assemblies	9.9%
Design Power Peaking Factors	
Maximum Relative Assembly Power	1.47
Local Peaking Factor	1.30
Axial Peaking Factor	1.57
Total Peaking Factor	3.00
Additional Allowance for Overpower	1.20
NUCLEAR DESIGN DATA	
General	
Initial Average Fuel Enrichment	2.00%
Water/UO_2 Volume Ratio	2.38
Average Discharge Exposure	15,000 MWD/Ton
Control Characteristics	
Excess Reactivity of Clean Core (Uncontrolled) at 68°F	0.26 Δk
Worth of Control Rods	-0.18 Δk

TABLE IV-1 (CONT)

Worth of Borated Control Curtains	-0.12 Δk
Total Worth of Control	-0.30 Δk
Reactivity of Core With All Control Rods In	0.96 k_{eff}
Reactivity of Core With Strongest Control Rod Out	<0.99 k_{eff}

Approximate Reactivity Coefficients

	Cold	Hot (No Voids)	Operating
Moderator Temperature Coefficient (Δk/k/°F)	-5.0×10^{-5}	-39.0×10^{-5}	
Moderator Void Coefficient (Δk/k/% Void)		-1.0×10^{-3}	-1.5×10^{-3}
Fuel Temperature (Doppler) Coefficient (Δk/k/°F)	-1.3×10^{-5}	-1.2×10^{-5}	-1.3×10^{-5}

2.0 CORE NUCLEAR CHARACTERISTICS

(Same as Unit 2 PDAR as amended)

2.1 Performance Objectives

The nuclear performance characteristics of the core are designed to achieve two major objectives:

a. Provide sufficient excess reactivity to reach average fuel discharge exposure of 15,000 MWD/Ton on the initial core loading under rated thermal design output operating conditions.

b. Provide a nuclear dynamic response which 1) has a strong negative reactivity feedback under severe transient conditions, 2) contributes negative reactivity feedback consistent with the requirements of over-all plant nuclear-hydrodynamic stability, and 3) has a reactivity response which regulates or damps changes in power level and spatial distribution of power production in the core to a level consistent with safe and efficient operation.

These objectives are satisfied at all operating conditions of the core and at all states of fuel exposure.

2.2 Bases

Excess reactivity to meet the requirements of fuel exposure and reactor operation is provided by the fuel enrichment. Under steady-state conditions it is only required that a reliable means of control be provided to compensate and regulate the excess reactivity. This control is provided as discussed in Section X.

The excess reactivity also provides the driving force for the dynamic response of the reactor core. The core must be designed to have a dynamic response which contributes substantially to reactor control and ease of operation. The dynamic behavior of the core is characterized in terms of several reactivity coefficients. These are:

a. Fuel temperature or Doppler coefficient

b. Steam void coefficient

c. Over-all moderator temperature coefficient

It is also convenient in some cases to characterize the composite, simultaneous effect of all three coefficients above into a single term called power coefficient.

In UO_2 fuel the Doppler coefficient provides potential for a large instantaneous negative reactivity feedback to any power rise, either gross or locally, of the core. The magnitude of the Doppler coefficient is inherent in the fuel design and does not vary significantly among various light water moderated UO_2 fuel designs having low enrichment. This coefficient provides negative feedback to terminate large core transients. The reference design provides limitations on the combination of rate and magnitude of potential reactivity additions as discussed in Section IV-5.2.

The steam void coefficient contributes to nuclear-hydrodynamic stability. The considerations to assure stability are discussed in Section X-3.2. and Appendix G. Since a number of plant parameters including the void

coefficient contribute to stability requirements, no specific coefficient value can be used as a design basis. In general, to assure stability, the void coefficient during power operation must not become too negative. The water-to-fuel ratio, 2.38 in the reference design, provides a void coefficient consistent with other plant parameters in meeting stability limits.

A second requirement is imposed on the void coefficient, or more precisely to the moderator density coefficient interior to the fuel assemblies. In Doppler terminated or controlled transients, this moderator coefficient must not result in a significant positive reactivity contribution to the core as heat transfers from fuel to coolant. This condition is satisfied if the moderator density or void coefficient interior to the fuel assemblies is designed to be zero or slightly negative in the cold core condition.

The overall moderator temperature coefficient includes temperature effects interior to fuel assemblies and in the moderator in the gaps between fuel channels. This coefficient is relatively slow acting as it takes on the order of minutes for the water gaps to reach temperature equilibrium with the circulating coolant and in this manner it contributes to ease of reactor operation. The overall temperature coefficient can be permitted to be positive to the point where it does not significantly diminish the negative reactivity feedback of the Doppler and void coefficients or does not contribute positive reactivity during core heat up at a rate faster than the operator can regulate it. These conditions are satisfied by designing the overall core average moderator temperature coefficient to become and remain negative prior to attaining normal reactor operating temperature, and to be limited to an integrated positive contribution of less than the prompt critical value between the point at which nuclear heating is initiated and operating temperature.

Finally, perturbations of reactor power level result in shifts of power distribution in the core due to the effects of xenon variations. The inherent nuclear characteristics of the core lead to strong damping of such oscillations. Such damping is provided by the operating power coefficient of the core. Operating experience and analysis has indicated that in large boiling water reactors, a power coefficient more negative than about $-0.01 \frac{\Delta k/k}{\Delta P/P}$ (1) provides damping of xenon induced power shifts to the point that they can be maintained within normal operating limits by minor control rod adjustment.

2.3 Description of Nuclear Characteristics

2.3.1 General

The reactor is a light-water moderated reactor, fueled with slightly enriched uranium dioxide. At operating conditions, the moderator is permitted to boil, producing a spatially variable density of steam voids within the core. The use of water moderator produces a neutron energy spectrum such that the fissions are produced principally by thermal neutrons.

The presence of U-238 in uranium dioxide fuel leads to the production of significant quantities of plutonium during core operation. This plutonium contributes both to fuel reactivity and power production of the reactor. In addition, direct fissioning of U-238 by fast neutrons yields approximately seven percent of the total power and contributes to an increased fraction of delayed neutrons in the core. The U-238 contributes a strong negative Doppler coefficient of reactivity, which improves the inherent response of the reactor which limits the peak power in excursions. The strong negative void reactivity effect contributes to the overall plant stability and to the damping of xenon oscillation effects.

(1) Nuclear Characteristics of Large Advanced BWR's, R. L. Crowther and D. L. Fischer, TID-7672, ANS Topical Meeting, Sept. 26-27, 1963, San Francisco, Calif.

2.3.2 Fuel Cycle

The fuel enrichment of an average of 2.0 weight percent U-235 is chosen to provide a potential excess reactivity in the fuel assemblies sufficient to overcome the neutron losses due to core neutron leakage, moderator heating and boiling, fuel temperature rise, equilibrium xenon and samarium poisoning, plus an allowance for fuel depletion. This enrichment provides an initial cold core multiplication factor of 1.26. Control of excess reactivity is described in Section IV-5.3.

The reactor is designed to be refueled annually on a progressive partial batch schedule. Although the detailed refueling plan has not yet been specified, it is expected that the following plan may be typical:

The initial core will be operating to approximately 8000 MWD/Ton at which time the control curtains and 30 percent of the fuel will be removed to be replaced by unirradiated fuel. The discharged fuel will be stored for future use. Core operation will resume and continue until the end of the second fuel cycle and another 30 percent batch of irradiated fuel will be replaced by unirradiated fuel. At the end of the third cycle, 40 percent of the fuel will be discharged and the 30 percent stored discharge from the first cycle will be loaded along with a 10 percent batch of unirradiated fuel. By the fifth cycle, approximately 25 percent of the fuel will be removed from the core annually and replaced by unirradiated fuel.

2.3.3 Reactivity Coefficients

a. Doppler Reactivity Coefficient

The characteristically large and virtually instantaneous negative Doppler coefficient of reactivity of a slightly enriched uranium dioxide fuel provides an inherent mechanism for terminating nuclear transients. The effectiveness of the Doppler reactivity feedback in terminating fast reactivity transients can be seen in the analysis of the startup incident, cold water insertion, and control rod drop accidents as presented in Section XI.

Figure 83 shows the Doppler coefficient as a function of fuel temperature and steam voids for unirradiated fuel. The behavior with exposure is assumed constant for accident analysis although in fact contributions from plutonium, particularly Pu-240, will increase the magnitude of the coefficient by 10 percent to 15 percent at the maximum core average burnup, 10,000 to 12,000 MWD/Ton.

Figure 84 illustrates the total Doppler reactivity defect (the negative integrated Doppler reactivity coefficient) existing in the core under normal steady-state operating conditions up to average fuel temperatures of 1000°F. This curve includes the effects on the Doppler reactivity defect of both fuel temperature and steam voids characteristic of normal operation.

Figure 85 includes total Doppler availability under abnormal conditions. Doppler defects are shown for adiabatic fuel heating transients starting from cold, hot-standby and rated power fuel temperatures. Fuel temperatures on the abscissa represent effective average fuel temperatures in the core. In Figure 86 is shown the integrated Doppler reactivity as a function of time that is actually involved during a hot-standby 0.025 Δk rod drop accident power excursion (Section XI-3). Comparison of Figures 85 and 86 indicates substantially more Doppler is available than is required to terminate the excursion.

Uncertainties in the design calculations of Doppler effects in a Boiling Water Reactor (BWR) have been assessed. Such an assessment requires consideration of both the Doppler coefficient and resonance integral information. The significant parameter reflecting both these quantities is the reactivity decrement due to Doppler broadening. Based on evaluation of data and calculations discussed below it is estimated that design calculations have a nominal conservative bias of about 20 percent in predicted reactivity decrement.

Experimental data on UO_2 fuel against which the design model is compared is that of Hellstrand[1] and Pettus[2]. These particular measurements were chosen as being typical and more carefully performed than other information which has been reviewed. An overall assessment has been made of the accuracy of Doppler reactivity decrement data based on (1) review of the experimental data, (2) review and analysis of various Doppler calculational recipes, and (3) analysis of lattice parameter measurements and excursion experiments. The uncertainty in the data is assessed to be ±10 percent with 67 percent confidence.

Summary comparisons of the Doppler reactivity decrement ($\Delta k/k$) and the Doppler coefficient ($1/I\ dI/dT$) are shown in Table IV-2 for typical BWR fuel for both cold and hot reactor conditions. The comparison assumes no boiling and moderator temperature, T_m, initial fuel temperatures, T_1, and final fuel temperature, T_2, as indicated in the tables. Gross core spatial importance weighting is not included. The results show the design model predictions compared to Hellstrand and Pettus data. The Δ indicates the percentage difference between the experimental and design model. This comparison shows an average conservative bias of the design model of the order of 5 percent to 10 percent.

In addition to the data comparison above, the design model assumes a constant radial fuel temperature. It has been shown[3] that this can lead to a slight conservatism in estimating Doppler reactivity decrements. For typical BWR fuel it is estimated that about 3 percent conservatism is introduced by this assumption.

Finally, after approximately one fuel cycle for the remainder of reactor life the Doppler reactivity decrement is increased by 10 percent to 15 percent due to the presence of Pu-240 in the core[4].

On the basis of the above factors a nominal conservative bias of about 20 percent in the design calculations of Doppler effects is inferred.

---

1. Hellstrand, E., Nuclear Science and Engineering #8, 497 (1960).
2. Pettus, W.G., and Baldwin, M.N., "Resonance Absorption in U-238 Metal and Oxide Rods," BAW-1244.
3. Dresner, L., "Some Remarks on the Effect of a Non-Uniform Temperature Distribution on the Temperature Dependence of Resonance Absorption," Nuclear Science and Engineering, 11, 39, (1961).
4. Crowther, R.L., "Approximate Method for Determination of Doppler Broadening of Pu-240 Resonances," Trans. ANS 7, 1 (June, 1964).

TABLE IV-2

COMPARISONS OF TYPICAL BWR FUEL DOPPLER EFFECTS

DOPPLER REACTIVITY DECREMENT $(-\frac{\Delta k}{k})$

Initial Conditions: $T_m = 68°F$, $T_1 = 68°F$

Final - T_2	APED	Hellstrand	Δ%	Pettus	Δ%
200°F	0.001629	0.001995	+22.5	0.001810	+11.1
1000°F	0.009475	0.011196	+18.2	0.010162	+ 7.3
2000°F	0.017001	0.019568	+15.1	0.017758	+ 4.5
3000°F	0.023391	0.026348	+12.6	0.023911	+ 2.2
4000°F	0.029143	0.032198	+10.5	0.029220	+ 0.3
5000°F	0.034430	0.037423	+ 8.7	0.033962	- 1.4

DOPPLER COEFFICIENT $(-\frac{1}{I}\frac{dI}{dT})$

200°F	0.00016052	0.00019062	+18.8	0.00019806	+23.4
1000°F	0.00010790	0.00011997	+11.2	0.00012434	+15.2
2000°F	0.00008310	0.00008735	+ 5.1	0.00009035	+ 8.7
3000°F	0.00007009	0.00007051	+ 0.6	0.00007283	+ 3.9
4000°F	0.00006171	0.00005991	- 2.8	0.00006181	+ 1.6
5000°F	0.00005578	0.00005249	- 5.9	0.00005410	- 3.0

DOPPLER REACTIVITY DECREMENT $(-\frac{\Delta k}{k})$

Initial Conditions: $T_m = 547°F$, $T_f = 1000°F$

2000°F	0.010165	0.011305	+11.2	0.010259	+ 0.9
3000°F	0.018796	0.020461	+ 8.9	0.018569	- 1.2
4000°F	0.026543	0.028398	+ 7.0	0.025740	- 3.0
5000°F	0.033703	0.035419	+ 5.1	0.032143	- 4.6

Note: Δ indicates the percentage difference between the experimental value and the APED design model.

b. Moderator Coefficients

The moderator temperature coefficient of reactivity is the composite of three principal effects. These are 1) the temperature effect on the infinite multiplication factor, 2) the temperature effect on core neutron leakage, and 3) the temperature effect on the control rod system worth. The composite coefficient becomes less negative with fuel depletion, reaching the least negative value at the end of each fuel cycle.

As fuel depletes, the infinite multiplication component of the coefficient exhibits a small positive trend due to fuel isotopic changes. In addition, the fraction of the total control rods, which are inserted in the critical core, diminishes. Thus, the large negative reactivity contribution of the control rods to the

temperature coefficient decreases with core life. This is the principal cause of the positive trend of the total moderator temperature coefficient with core life.

The moderator void coefficient of reactivity is likewise a composite of the three effects; infinite multiplication factor, core neutron leakage, and control rod system worth. As in the temperature coefficient, the composite coefficient becomes less negative with fuel depletion. However, unlike the temperature coefficient, the void coefficient remains negative.

The moderator density coefficients are mathematically represented by

$$\frac{1}{k_{eff}} \frac{dk_{eff}}{d\rho} = \frac{1}{k_\infty} \frac{dk_\infty}{d\rho} - \frac{C \frac{dW}{d\rho}}{1 - CW} - \frac{M^2 \frac{dB_g^2}{d\rho} + B_g^2 \frac{dM^2}{d\rho}}{1 + M^2 B_g^2}$$

where

ρ = moderator density
C = control rod density function
W = control rod worth
M^2 = migration area
B_g^2 = geometric buckling

The terms on the right side of the equation represent the contributions of fuel multiplication, control rods and leakage, respectively, to the coefficients.

Any decrease in moderator density will increase neutron leakage from the region of the disturbance and will also enhance the strength of the control rods. These two contributions, therefore, are always negative everywhere in the core and monotonically increase in magnitude with moderator density reduction.

The k_∞ contribution, however, has a local spatial dependence. Within the fuel element channel a condition of undermoderation exists under all conditions and the local moderator density coefficient is negative. External to the fuel element, in the surrounding water gaps, a degree of overmoderation exists from the cold ambient condition through the lower end of the heatup range, and the local coefficient is slightly positive for these reactor states. The extent of this positive contribution is carefully limited by the design criteria. In the power range the gaps as well as the interior of the fuel assembly are undermoderated and local coefficients are everywhere negative.

Early in core life the control density is high and the control term contributes a strong negative effect to the coefficient. At high fuel exposures this term approaches zero due to removal of control. While the k_∞ term has a slight positive trend with exposure, the control term is by far the major factor in the reduction of magnitude of the coefficient with fuel exposure.

In a gross core power disturbance the k_∞ and control terms dominate since leakage is small. In a disturbance such as a control rod withdrawal, the control term in that region is zero but the geometric buckling and, therefore, leakage from the disturbed zone is large.

Near the end of core life where control is at a minimum a gross core transient that is sufficiently slow to allow water gaps to equilibrate with the flowing coolant (tens of seconds) may, below operating temperature, see a slight positive moderator reactivity effect. If, however, the transient accelerates so that voids are produced in the fuel element by fuel heating, or if voids should somehow be swept into the channels with the circulating coolant, an immediate negative k_∞ contribution would result such that the total moderator coefficient effect would be negative.

In a local disturbance the same phenomenon could occur except that a larger negative leakage effect would always be present. The local positive void coefficient external to the fuel channel in the water in the startup through the lower half of the heating range causes no difficulty because in operation there will be no voids formed in these water gaps. However, if it is assumed for the purpose of analysis that voids are formed in these water gaps at this low temperature level the positive contribution by the water gaps is very small. However, the over-all void coefficient will in all temperature conditions be negative since localized disturbances cannot be made small enough to generate voids in the water gaps only. Therefore, at no time will the formation of voids in the reactor lead to a positive reactivity feedback.

In summary, in those regions of the core where rapid moderator density changes can occur, density coefficients are designed for safety reasons to be always negative.

Figures 81 and 82 show the moderator temperature and void coefficients of reactivity for beginning of life and at 10,000 MWD/T fuel exposure. Because refuelling will be done on a batch basis, utilizing symmetrical loadings which avoid concentrations of the most exposed fuel, the 10,000 MWD/T point is the highest effective exposure the initial core will experience in the reactor and thus represents a limiting case on both of these coefficients. As shown on Figure 81, the temperature coefficient at low temperatures is only slightly positive at 10,000 MWD/T thus satisfying the basis outlined in Section IV-2-2. Similarly the void coefficient satisfies the basis in that it remains negative throughout core life.

2.3.4 Xenon Transients

Operating experience at Dresden Unit 1 has shown large boiling water reactors to be inherently stable against xenon-induced power oscillations. This inherent stability, which has also been demonstrated analytically, results from the self-damping effects of the large negative void coefficient of the boiling water reactor.

Large load changes at Dresden Unit 1 have resulted in highly damped changes in vertical power distribution. These power distribution changes occur in the vertical direction only. The vertical power distribution transients are self-damped, with the distribution attaining a steady-state condition about 15 hours after the initiating disturbance.

Analytical studies indicate that for large boiling water reactors, underdamped, unacceptable power distribution behavior could occur with core power coefficients of more than about $-0.01 \frac{\Delta k/k}{\Delta P/P}$. In Dresden Units 2 and 3, the power coefficient at full power is about $-0.04 \frac{\Delta k/k}{\Delta P/P}$, which is well below the range of xenon instability.

2.4 Surveillance and Testing

The reactor nuclear characteristics are determined through a planned test program throughout the initial testing phase following fuel fabrication and up to full power operation. A set of tests demonstrate the acceptability of the reactor operating behavior at every refueling.

The initial testing phase is divided into two groups. The first group of tests is performed at the Vallecitos Atomic Laboratory of the General Electric Company as a quality control test. The second group will be performed at Dresden Unit 3 and will be directed mainly for the determination of full core characteristics. The following is a description of these tests.

Proof Test

A proof test of the reactor fuel consists of a critical assembly measurement as a final manufacturing quality control test. The measurements include determination of the minimum number of fuel assemblies required to achieve a critical array. The fuel assembly uniformity is checked by sequentially substituting a number of fuel assemblies in the minimum critical array and comparing reactivity. The uniformity of all fuel assembly composition is certified based on quality control and criticality measurements.

Initial Startup Tests

The full core nuclear characteristic tests are divided into various phases. Phase 0 is the open vessel or zero power tests. Further phases are closed vessel tests that take the power from zero to rated. Included in these are tests of the control system and instrumentation, and the verification of the dynamic coefficients and power distribution.

3.0 FUEL MECHANICAL DESIGN

(Same as Unit 2 PDAR as amended)

3.1 Performance Objective

The performance objectives of the fuel assemblies are:

(1) To provide proper positioning of the fuel rods, proper distribution of the coolant flow, and proper heat transfer characteristics such that the performance objectives of the fuel rods shall be met for the design life of the fuel.

(2) Provide rigidity and protection for the fuel rods during handling and provide guide surfaces for the control rod rollers.

The basic objective of the fuel rod mechanical design is to ensure that conservative design limits are not exceeded in normal operation, unit manuevers, or overpower transients up to a condition of central melting of UO_2. The Zircaloy-2 cladding is free standing (self-supporting) against external pressure and has sufficient plenum volume within the fuel rod to prevent excessive internal pressure resulting from fission gas formation or other gases liberated over the design life of the fuel. Fuel cladding stresses caused by external or internal pressure shall not exceed the design stresses over the design life of the fuel, taking into account normal operation or transients resulting from malfunction of the reactor pressure controlling equipment.

The strength theory, terminology, and stress categories, presented in Criteria of Section III of the ASME Boiler and Pressure Vessel Code for Nuclear Vessels, 1964, are used as a guide in the mechanical design and stress analysis of the reactor fuel rods. The mechanical design is based on the maximum shear stress theory for combined stresses. The equivalent stress intensities used are defined as the difference between the most positive and least positive principal stresses in a triaxial field. Thus, "stress intensities" are directly comparable to strength values found from tensile tests. Table IV-3 presents a summary of the basic stress intensity limits that are applied for Zircaloy-2 cladding:

TABLE IV-3

STRESS INTENSITY LIMITS

Categories	Stress Intensity Limits In Terms of: Yield Strength (S_y)	Ultimate Tensile Strength (S_u)
General Primary Membrane Stress Intensity	2/3 S_y	1/2 S_u
Local Primary Membrane Stress Intensity	S_y	1/2 to 3/4 S_u
Primary Membrane Plus Bending Stress Intensity	S_y	1/2 to 3/4 S_u
Primary Plus Secondary Stress Intensity	2 S_y	1.0 to 1.5 S_u

The fuel clad thickness, plenum volume, and other mechanical design features required to meet the above basic objective are determined considering continuous normal operation at reference design thermal output and short time operation up to a condition of incipient central melting of UO_2.

3.2 Bases

The fuel design assures a conservative margin against excessive stresses or distortions for maximum fuel lifetimes and exposures, for all maneuvers, and for many types of transients caused by equipment malfunctions.

Fuel cladding stresses will be evaluated at the design overpower condition and also for overpressure or underpressure transients caused by malfunction of the reactor pressure controlling equipment to insure that the stress intensity levels given in Table IV-3 will not be exceeded. Stresses due to external pressure, internal pressure, bending effects at end plugs, and thermal stresses will be considered. Tensile properties used in stress analyses are based on test data of irradiated BWR fuel cladding for the applicable temperature. A fatigue life analysis will be performed based on the estimated number of temperature, pressure, and power cycles.

In addition, the fuel design assures that for a still wider range of more severe, but less likely, accident conditions fuel clad integrity will be maintained.

The Dresden Unit 1 provides the largest body of operating experience on Zircaloy clad fuel. At the present time, peak fuel exposures on the original fuel assemblies have reached 11,500 MWD/Ton. Special irradiations have attained much higher exposures, and confirm the adequacy of the design limits used for the reference fuel design. The effects of exposure are to increase the tensile properties of the cladding material, reduce ductility and cause slight UO_2 expansion. Adequate free volume is provided in the fuel pellets and between the pellets and cladding to prevent overstraining the cladding due to UO_2 swelling resulting from long-term irradiation.

Zircaloy cladding has demonstrated a high degree of corrosion resistance in experimental tests and reactor operating experience. The minimization of stresses, intensive inspections and tests of the cladding material and completed fuel rods assure fuel rod integrity. In addition, the environmental control in the reactor and the minimization of thermal and pressure transients during most of the postulated incidents, further reduce the probability of cladding failures.

3.3 Description of Fuel and Core

3.3.1 Description of Fuel Rods

The reactor fuel consists of uranium dioxide pellets, manufactured by compacting and sintering of uranium dioxide powder into right circular cylindrical pellets. The average density of the pellets is 94 percent of theoretical density. The pellets are ground to size and enclosed in Zircaloy-2 tubes (cladding). The rods are sealed by welding Zircaloy plugs in each end. Fuel rods are shown in Figure 14.

A fuel cladding thickness of approximately 0.036 inch is adequate to satisfy the requirement that the clad be "free standing". Full length fuel rods with 144 in. active fuel length are used except for the central rod of each assembly which has intermediate plugs which support the spacers. Approximately 14 of the 49 rods in the fuel assembly have a reduced U-235 enrichment to reduce the local power peaking factor.

Although most fission products are retained within the UO_2, even at heat fluxes high enough to cause center melting, a small fraction of the gaseous products is released from the pellet. These released gases accumulate in a plenum at the top of the rod. The volume of this plenum is dependent upon calculated internal pressure present during the expected life of the fuel rod.

Fuel rod internal pressure is due to the helium which is backfilled at one atmosphere pressure during rod fabrication, volatile content of the UO_2, and the fraction of gaseous fission products which are released from the UO_2. A quantity of 1.35×10^{-3} gram moles of fission gas are produced per MWD of power production. It is assumed that 0.5% of the fission gas produced will be released from any UO_2 volume at a temperature less than 3000°F. 20% from any UO_2 volume between 3000°F and 3450°F. and 100% from any UO_2 volume above 3450°F. For a fuel rod similar to the reference design the resultant release fraction is 27% in the hottest fuel rod and the resultant total plenum pressure is 1715 psia at end of life at operating temperature.

A preliminary stress analysis for the reference fuel rod design showed that the closest approach to the design performance objectives presented in Table IV-3 occurred at the connector location of the segmented fuel rod at the beginning of life where the calculated stress intensity was less than 90% of the design limit. During the life less than 25% of the expected fatigue life would be consumed.

3.3.2 Description of Fuel Assemblies

The fuel assemblies consist of 49 fuel rods in a square (7 x 7) array with an active fuel length (cold) of 144 inches. The fuel assembly is shown in Figure 14. The individual fuel rods are spaced and supported by the top tie plate and bottom fuel rod support castings. Approximately eight fuel rods are threaded into these support castings. The remaining fuel rods can expand axially by sliding in holes in the top tie plate to prevent bowing of the fuel assembly due to differential axial thermal expansion. Approximately seven spacers, located along the vertical dimension of the fuel assembly, keep the fuel rods properly separated throughout their length.

The fuel assembly is enclosed in a Zircaloy channel which provides a barrier to separate the two parallel flow paths, one to cool the fuel and the other to cool control rods, temporary control curtains, sources, and in-core instruments. The channel makes a sliding seal fit on the lower tie plate surface of the fuel assembly and is attached to the upper tie plate by a capscrew. An orifice, mounted in a fuel support casting upon which the fuel assembly rests, establishes the relative flow per channel.

The fuel assembly channel has a smooth surface with no protrusions or holes and provides a bearing surface for the control rod rollers.

3.3.3 Description of Core Geometry

The reactor core occupies the volume of a vertical cylinder 182.2 inches in diameter and 144 inches high. Refer to Figures 12 and 13. The core contains 724 fuel assemblies of which 708 are adjacent to the 177 control rods. The 16 assemblies not adjacent to control rods are at the periphery of the core. The fuel assemblies rest on the stainless steel fuel support castings, which are attached to the top of the control rod guide tubes.

The 177 control rods are inserted into the core from below through the control rod guide tubes. These tubes extend upward from the control rod drive thimbles, in the lower vessel head, to the fuel support casting. The description of the control rods is given in Section IV-5.3.4.

The 324 temporary control curtains are located in the gaps between fuel channels not occupied by control rods and supported from the upper core grid. The construction of the temporary control curtains is described in Section IV-5.3.5.

The gaps between fuel channels also contain a number of antimony-beryllium neutron source assemblies and the in-core nuclear instrumentation described in Section X-4.3. Locations for in-core nuclear instrumentation are shown in Figure 13.

The description of the components of the core structure is given in Section IV-6.

3.4 Surveillance and Testing

Rigid quality control requirements are enforced at every stage of fuel manufacturing to insure that the design specifications are met. Written manufacturing procedures and quality control plans define the steps in the manufacturing process. Fuel tubing is subjected to 100 percent dimensional inspection and ultrasonic inspection to reveal defects in the tube wall. Destructive tests of representative tubes from each lot of tubing, including chemical analysis, tensile tests, bend tests and burst tests, are performed. All tubes are subjected to a corrosion resistance test (autoclave). Integrity of end plug welds is assured by standardization of weld process based on radiographic and metallographic inspection of welds, and by the helium leak test of completed fuel rods. UO_2 powder characteristics and pellet densities, composition, and surface finish are controlled by regular sampling inspections. UO_2 weights at every stage in manufacturing are recorded. Dimensional measurements and visual inspections of critical areas such as fuel rod-to-rod clearances are performed after assembly and after arrival at the reactor site.

4.0 CORE THERMAL AND HYDRAULIC CHARACTERISTICS

(Same as Unit 2 PDAR as amended)

4.1 Performance Objectives

The basic objective of the core thermal and hydraulic design is to ensure that at the design overpower condition, the following thermal limits shall not be exceeded:

Minimum Critical Heat Flux Ratio	Equal to or greater than 1.5
Maximum UO_2 Center Temperature	Below melting point, 5080°F

The design overpower condition uses the design power distribution peaking factors and a design overpower factor of 1.20 applied to the reference design thermal output.

4.2 Bases

The core size and heat transfer features required to meet the above basic objectives are determined by means of a steady-state analysis at the design overpower condition, using design power distributions representing the most limiting in the operating cycle, and rated recirculation flow.

A computer program is used to analyze the thermal and hydraulic characteristics of the reactor core as a whole. The geometric, hydraulic, and thermal characteristics of the core design are represented, including number of fuel assemblies in each orifice zone of the core, fuel assembly dimensions, friction factors and flow restrictions, and the flow characteristics of the fuel orifices, inlet plenum region of the reactor, and leakage flow paths around the fuel channels.

Individual cases have been analyzed by providing reactor power, flow, inlet enthalpy, and appropriate power distribution factors as input to the above computer program for the reference design. The output of the program includes the calculated flow distribution among the several channel types, and a detailed analysis of the heat fluxes, steam quality, void fraction, and MCHFR at as many as 20 axial nodes for the average and peak power fuel assemblies in each orifice zone.

A computer program is also used to calculate fuel rod temperatures. The program uses the UO_2 thermal conductivity data as a function of temperature presented in GEAP-4624,[1] a nominal pellet-to-clad gap conductance of 1000 Btu/hr-ft^2, and appropriate boiling heat transfer coefficients. UO_2 pellet thermal expansion characteristics and rate of UO_2 swelling due to irradiation are calculated. Thermal effects of irradiation including reduction in local power peaking factor due to U-235 depletion, buildup of Pu near the surface of the pellet, and effect of gap width and gas composition on gap conductance, are considered in assuring that the thermal-hydraulic performance objectives are met.

Comparisons of the analytical models used with fuel assembly design details such as fuel rod-to-rod and rod-to-channel clearances and spacer configurations have been made to insure that the above computer programs adequately represent the actual core and fuel design, and that design correlations, such as for CHF, are applicable.

---

(1) GEAP-4624, "UO_2 Pellet Thermal Conductivity from Irradiation with Central Melting", M. F. Lyons, et al., July, 1964.

4.2.1 Design Overpower Factor

The selected design overpower factor, 1.20, includes consideration of measurement and calculational uncertainties as well as operational transients. Operational transients are either prevented or limited in magnitude by the inherent characteristics of the reactor core, or by interlocks, special protective equipment, and plant machinery characteristics. During the accumulated experience of approximately ten equivalent full power years of operation of General Electric boiling water reactors, thermal overpower condition in the range of 105-110 percent of nominal reactor power has occurred in only one instance. The combined effect of calculational and measurement uncertainties and plant overpower transients would not exceed the design overpower condition except in extremely unlikely accidents. Consequences of such accidents are described in Section XI.

4.2.2 Design Power Distribution

The design power distribution is divided for convenience into several components: relative assembly power, local and axial.

The relative assembly power is the power of a fuel assembly divided by the core average assembly power. The local factor is the maximum fuel rod average heat flux in an assembly divided by the assembly average heat flux. The axial factor is the maximum heat flux on a given fuel rod divided by the average heat flux of that rod. Peaking factors vary throughout an operating cycle, even at steady-state full power operation, since they are affected by withdrawal of control rods to compensate for fuel burnup. Analyses are performed using a most limiting power distribution which represents the maximum heat flux and minimum critical heat flux ratio expected during the cycle in question. In this distribution, the peak relative assembly power is 1.47, the local factor for this limiting assembly is 1.30, and the axial factor is 1.57 yielding a value of 3.00 for the ratio of the peak heat flux in the core to the core average heat flux. In critical heat flux ratio design analyses, the axial power distribution is assumed to be skewed toward the top of the core so that the peak is located about one-third of a core active length from the top.

4.2.3 Minimum Critical Heat Flux Ratio

The critical heat flux is the heat flux above which the nucleate boiling process breaks down and transition boiling commences. Transition boiling is manifested by an unstable fuel cladding surface temperature, rising suddenly as steam blanketing of the heat transfer surface occurs, then dropping to the nucleate boiling temperature as the steam blanket is swept away by the coolant flow, then rising again. At still higher values of heat flux, film boiling occurs, with higher and stable fuel cladding temperatures. The surface temperature in film boiling, and possibly the temperature peaks in transition boiling, may reach values which could cause weakening of the cladding and accelerated corrosion.

The critical heat flux is a local phenomenon and is a function of the local steam quality, mass flow rate, pressure, and flow area geometry. For design purposes, an arbitrary straight line is plotted below all the applicable data points for the sake of conservatism and to provide a simple analytic function relating the heat flux limit to steam quality. Any point on the line is defined as the critical heat flux for the quality which is the abscissa of the point. Thus, the critical heat flux given by the design limit line is always less than the heat flux which was observed to produce transition boiling at the given quality.

The design correlation for critical heat flux is reported in APED-3892, "Burnout Limit Curves for Boiling Water Reactors", E. Janssen and S. Levy, April, 1962.

The critical heat flux ratio at any point of a heat transfer surface is the ratio of critical heat flux at that point to local heat flux.

In recent tests, [1] Zircaloy-clad UO_2 fuel was purposely operated in a reactor at heat fluxes well into film boiling for a total time exceeding five minutes, then operated at typical BWR conditions for ten days. Post irradiation examination showed evidence of overheating but no cladding failure. Thus, the design limit of 1.5 minimum critical heat flux ration is conservative.

4.2.4 UO_2 Center Temperature

The fuel rod is designed to operate up to a condition of incipient central melting of the UO_2. If fuel rod power were increased so that significant melting of UO_2 occurred, the fraction of fission gas released from the UO_2 would increase and the UO_2 volume would increase due to the higher temperature and the phase change. The internal pressure would be increased and, in those fuel rods having minimum pellet-to-cladding gap, cladding strain would occur due to pellet-to-cladding interaction.

The design correlation for thermal conductivity of UO_2 is reported in GEAP-4624.

Observation of fuel operated under conditions of gross UO_2 melting indicates that a heat flux 10 percent to 20 percent higher than that corresponding to incipient central melting is necessary to cause permanent swelling or damage to the cladding. Thus, the design limit of no UO_2 center melting is conservative.

4.3 Description of Core Thermal and Hydraulic Characteristics

Descriptive information and performance data for the reference core and fuel design are given in Table IV-1, page IV-1-1.

4.3.1 Coolant Flow Data

Coolant for the core flows from the discharge of the jet pumps through the bottom plenum region of the reactor to the fuel inlets at the bottom of the core. A small fraction of the recirculation flow bypasses the fuel assemblies to cool the core components between the fuel channels and the remainder flows vertically upward inside the fuel assemblies to cool the fuel rods. The fission energy is transferred as thermal energy from the fuel to the coolant, heating the coolant and vaporizing part of it, producing a two-phase steam-water mixture. This mixture passes out of the fuel assembly into a mixing plenum and then upward through the steam separators. The water is separated from the steam and flows to the annulus around the core to be mixed with the returning feedwater. Part of the flow is pumped through the recirculation loop to the jet pumps to drive the rest of the recirculation flow.

The core is divided into two orifice zones. The outer row of fuel assemblies has a more restrictive orifice than the inner zone. Thus, flow to the hottest fuel assemblies in the inner zone is increased. In addition, the dependence of fuel assembly flow on fuel assembly power is decreased and flow stability margins are improved.

4.3.2 Core Voids

The reference core operates at reference design thermal output with average voids of the coolant within the fuel assemblies of 37 volume percent and average exit voids of the coolant within the fuel assemblies of 58 volume percent. The average void fractions and average exit void fractions do not represent any particular design limits by themselves. The limitations imposed by stability and critical heat flux utilize core void fraction and quality in their determination.

---

(1) Experience with BWR Fuel Rods Operating Above Critical Heat Flux. S. Levy, et al., NUCLEONICS, April, 1965.

4.3.3 Fuel Temperatures

Fuel temperatures are calculated using the UO_2 thermal conductivity reported in GEAP-4624. This curve of thermal conductivity for UO_2 pellets is based on the most recent interpretation of all available data, including examinations of special capsules which operated with molten UO_2. The value of the integral of the thermal conductivity of UO_2 from $0^\circ C$ to the UO_2 melting point has been determined to be not less than 90 watts/cm. The UO_2 thermal conductivity varies with exposure in fuel at temperatures below 1300°F but not above that temperature. Since the hottest fuel pellets have essentially no UO_2 below this temperature the effect of exposure on thermal conductivity in these most limiting pellets is expected to be negligible.

Results of analyses show that with the reference core design, power peaking factors, and rated recirculation flow, the calculated UO_2 center temperature at the design overpower peak heat flux, 418,800 Btu/hr-ft^2, is 4500°F, and the calculated MCHFR is greater than 1.5.

4.4 Surveillance and Testing

Principal thermal-hydraulic characteristics are evaluated by core performance tests in the engineering startup program during the step-wise approach to full power. The evaluation procedure includes the use of in-core nuclear instrumentation and normal plant process instrumentation, combined with the use of detailed precalculations to establish actual core performance characteristics including core flow, power, power distribution, minimum critical heat flux ratio, steam quality, and void distribution.

In addition, plant instrumentation allows evaluation of these principal core thermal-hydraulic characteristics at any time during operation.

5.0 REACTIVITY CONTROL CHARACTERISTICS

(Same as Unit 2 PDAR as amended)

5.1 Performance Objectives

The reactivity control system is designed such that under conditions of normal operation (a) sufficient reactivity compensation is always available to make the reactor adequately subcritical from its most reactive condition, and (b) means are provided for continuous regulation of the core excess reactivity and reactivity distribution.

Under conditions of abnormal reactor system disturbances, operator errors or malfunctions of equipment, the reactivity control system provides a sufficient rate of negative reactivity insertion, upon signal of the reactor protection system, to prevent fuel damage.

The inherent safety features of the reactor design as described in Section IV-2 in combination with engineered safeguards relating to reactivity control system described in Section X-3 are such that the consequences of a potential nuclear excursion accident, caused by any single component failure within the reactivity control system itself, does not result in damage either by motion or rupture to the reactor primary coolant system.

5.2 Bases

5.2.1 Reactivity Compensation

The primary purpose of the reactivity control system is to compensate and regulate the excess reactivity designed into the core. This is accomplished in the reference design by a control rod system and, in the initial core loading by a control rod system supplemented by temporary control curtains.

The control rod system of the reference core is designed to provide adequate control of the maximum excess reactivity anticipated during equilibrium fuel cycle operation. The initial core loading, however, has an excess reactivity somewhat higher than that of the equilibrium core. The basis for design of the temporary control curtains is that they shall compensate the reactivity difference between initial and equilibrium cores. The control rod is designed to provide adequate shutdown capability of the residual excess reactivity of the core from any operating state of fuel exposure condition. Fuel reactivity is highest at ambient temperatures with no xenon poisoning, and control strength is weakest at this condition. This reactor state is taken, therefore, as the basis for evaluating control rod shutdown capability. The shutdown capability is evaluated assuming that the control rod of highest individual worth is withdrawn and unavailable for control of the core. For design purposes, an adequate shutdown reactivity is taken to be $k_{eff} < 0.99$ when the core is evaluated under the conditions designed above.

In the unlikely event of a more serious malfunction of the control rod system, a standby liquid control system is designed to provide a redundant, continuously available shutdown capability. The most severe requirement imposed on the standby liquid control system, and its design basis, is shutdown from a full power operating condition, assuming complete failure of the control rod system to respond to an insertion signal. The rate of reactivity compensation provided by the backup system is designed to exceed the rate of reactivity gain associated with reactor cooldown from the full power condition.

5.2.2 Rate of Response

Under conditions of normal reactor operation, movement of control rods must not perturb the reactor beyond the capability of an operator to respond to the disturbance. This requirement prevents unnecessary operation of the reactor protection system. The maximum rate at which the rods can be moved and the incremental distance between control drive notches is such that under normal operating conditions the largest single notch increment of control withdrawn at the maximum withdrawal rate will result in a reactor period of not less than 20 seconds.

Abnormal reactivity disturbances and resulting power transients in the core can derive from any of the three sources. These are:

a. reactor system induced disturbances of core parameters such as coolant flow or pressure,

b. operator errors or procedural violations,

c. equipment malfunctions.

The reactor protection system described in Section X-5.0 senses these disturbances and under certain specified conditions may initiate a scram signal. Upon receipt of a scram signal the reactivity control system is required to render the reactor subcritical at a rate sufficient to prevent the initiating disturbance from causing fuel damage. Analysis of limiting transients (Section XI, Safety Analysis) have shown that negative reactivity insertion rates of 3% Δk per second for the first 10 percent of rod and 4% Δk per second to the 90 percent insertion point, with a 0.2 second instrument and valve actuation delay, provide the required protection.

The response of the reactor protection system in combination with the size, heat transfer features and inherent dynamic response characteristics of the core, prevent fuel damage resulting from a reactivity insertion accident due to any single equipment malfunction or single operator error. However, a compounding of more than one independent equipment malfunction, more than one operator error, or a combination of the above may result in fuel damage.

Certain postulated rapid reactivity insertion accidents are evaluated for the express purpose of determining whether damage to the primary system would result. These postulated excursions have the potential for damage to the primary system from pressure and momentum effects of rapid (few millisecond) rates of heat transfer from fuel to reactor coolant. To achieve the heat transfer rates which could lead to damage requires, at the least, rapid rupture and dispersal of some quantity of hot fuel into the surrounding coolant. This reactor is designed on the basis of avoiding sudden rupture of a significant number of fuel rods in any accidental excursion resulting from component or procedural failure within the reactivity control system. The threshold for this type of fuel rupture is estimated to correspond to a fuel energy content of 425 calories/gm UO_2. This limit is discussed further in Appendix C.

The magnitude of an accidental nuclear excursion is limited first by the strong, negative Doppler coefficient of reactivity inherent in the reactor design and secondly by the rate at which positive reactivity is added to the system by the malfunction. By providing engineered safeguards which limit, in combination, the maximum worth that an individual rod can assume and the maximum rate at which it can drop from the core, potential accidental reactivity insertion rates can be held below values which could cause primary

system damage. These safeguards devices, termed respectively the control rod worth minimizer and the rod velocity limiter, are described in Section X-3.1.4.

As a design basis reactivity addition rates are limited by these devices to well below the selected limit, i.e., that value which could result in any significant amount of fuel reaching the sudden clad rupture range during an accidental excursion. The nominal design values for the rod worth minimizer and velocity limiter are 0.025 Δk maximum rod worth and 5 ft/sec rod drop velocity. Analysis of a rod drop accident (Section XI-3.1) shows this combination of worth and rate will provide significant margin to fuel rupture. Additional discussion of this margin is included in Appendix D.

5.3 Description of Control System

5.3.1 Control Capability

Control of the operating reactor is accomplished by a combination of control rod movement and fixed control devices or curtains in the primary control system to accommodate burnup and long-term reactivity changes. The standby liquid control system is provided as a redundant shutdown system to cover exigencies in the primary control system.

The reference mechanical designs of the control rod system is described in Section X-3.1. The temporary control curtains and the control rod systems have the capability to control a cold excess reactivity of 0.26 Δk. A control balance description of the reference design is given in Table IV-4.

TABLE IV-4

CONTROL CHARACTERISTICS

Excess Reactivity of Clean Core at 68°F	Δk	0.26
Worth of Control Rods	Δk	-0.18
Worth of Borated Control Curtains	Δk	-0.12
Total Worth of Control	Δk	-0.30
Reactivity of Core with All Control Rods In	k_{eff}	0.96
Reactivity of Core with Strongest Control Rod Out	k_{eff}	<0.99

5.3.2 Control Rod Worth

With the normal control rod patterns required to maintain an acceptable power distribution in the operating core, an average control rod is worth about 0.005 Δk. The maximum worth of a rod in a typical full power operation pattern is about 0.01 Δk. The notch increment and rod worth are sized to limit the reactivity insertion to about 0.002 Δk for any notch increment of the rod withdrawn. This results in a six-inch travel between notches. Preplanned withdrawal patterns and procedural controls are used to prevent abnormal configurations giving rod worths above a nominal design value 0.025 Δk. These procedures are supplemented by either mechanical or electrical means as discussed in Section X-3.1.4.

5.3.3 Power Shaping and Burnup

During fuel burnup, control rods are used in part to counteract the power distribution effect of steam voids as indicated by the in-core flux monitors. Taken together, the control rod and void distributions may be used to flatten gross power peaks beyond that possible in the nonboiling core. The design provides considerable flexibility to control gross power distribution. This permits control of fuel burnup and isotopic composition throughout the core to the extent necessary to counteract voids at the end of a fuel cycle, when few control rods remain in the core.

5.3.4 Description of Control Rods

The cruciform shaped control rods contain a number of vertical stainless steel tubes filled with boron carbide powder, compacted to approximately 70 percent of theoretical density. The control rod is shown in Figure 15. Plugs are welded into the ends of the tubes to seal them. The boron carbide powder is separated logitudinally into independent compartments by stainless steel balls at approximately 18 inch intervals, held in place by a slight swaging of the tube. This feature tends to uniformly spread any compaction of the powder during control rod life.

A free volume of approximately 30 percent is provided in each tube as a plenum for helium from the B (n, alpha) Li reaction. Tubing wall thickness is adequate to withstand the maximum internal gas pressure developed at design boron burnup, corresponding to a 10 percent decrease in control rod worth.

Design stress intensity limits for control rod poison tubes are given in the following table:

TABLE IV-5

STRESS INTENSITY LIMITS

Categories	Stress Intensity Limits in Terms of Yield Strength (S_y)	Stress Intensity Limits in Terms of Ultimate Strength (S_u)
General Primary Membrane Stress Intensity	2/3 S_y	1/2 S_u
Local Primary Membrane Stress Intensity	S_y	3/4 S_u
Primary Membrane Plus Bending Stress Intensity	S_y	3/4 S_u
Primary Plus Secondary Stress Intensity	2 S_y	1.5 S_u

A stress analysis was performed of a control rod similar to that of the reference design. It was assumed that all control rod neutron absorptions were in B-10. Based on experimental data a value of 18% was used for the fraction of He gas generated by the B-10 (n, α) Li-7 which is released from the B_4C to cause internal pressure within the poison tubes. When the nuclear life due to depletion of B-10 was reached, the internal pressure in the most highly exposed poison tube was 13,100 psi, and the resultant maximum general primary membrane stress was less than 50,000 psi compared to a design limit of 51,500 psi.

The control rod tubes are held in cruciform array by a stainless steel sheath extending the full length of the poison section. A cruciform shaped top casting and handle aligns the tubes and provides structural rigidity at the top of the control rod. Rollers attached to the top casting maintain the spacing between the control rod and the fuel assembly channels. A similar connector casting is located at the bottom of the control rod and contains a velocity limiter section and rollers to position the lower part of the control rod in the control rod guide tube, located below the core. These bottom rollers always remain in the guide tube during operation. A coupling at the bottom of the control rod is connected and locked to the control rod drive index tube by an expandable ball and socket joint.

The control rods are capable of being positioned in steps to control neutron flux distribution in the reactor core. They are moved individually at an average rate of approximately three inches per second. A description of the control rod drive systems is given in Section X and in Appendix B.

5.3.5 Temporary Control Curtains

The temporary control curtains consist of boron-stainless steel sheets located in the narrow water gaps between fuel channels. These curtains are designed to augment the control rod system by approximately the difference in excess reactivity between the initial and equilibrium cores. The reactivity worth of the curtains decreases with the depletion of boron and asymptotically approaches the reactivity worth of a non-borated steel curtain. The permissible rate of depletion of the curtain worth is limited by the shutdown requirements and is controlled by the ratio of boron worth to structural steel worth. The temporary control curtains are shown in Figure 17.

The curtains are made of three sections of stainless steel containing natural boron. The upper and lower sections contain approximately 4200 ppm boron, and the middle section contains approximately 6500 ppm boron. Each of the 324 curtains is approximately 136 inches long and 8.5 inches wide. The curtains are located in the gaps between fuel channels that do not contain control rods. The curtains are supported by a hanger rod, which attaches to the upper core grid. The curtains are held in place by the fuel channels and any significant upward or downward movement is prevented by the hanger rod.

The temporary control curtains will be removed during a scheduled shutdown as the excess reactivity of the initial core has decreased sufficiently to make supplementary control unnecessary. The irradiation of the curtains does not result in deformation causing operational difficulties.

5.3.6 Standby Liquid Control System

The standby liquid control system is designed to bring the reactor to a shutdown condition at any time in core life, even if all withdrawn control rods are unavailable for insertion. The preliminary value for the system reactivity worth is $-0.17\,\Delta k$. The design rate of reactivity insertion is at least $-0.002\,\Delta k$ per minute. The excess reactivity of the cold, clean core with control rods in a hot operating pattern is approximately $0.12\,\Delta k$. The time required to insert that quantity of liquid poison is less than 60 minutes, much less than the reactor cooldown time and xenon decay time (refer to Section X-3.3 for system description).

5.4 Surveillance and Testing

Quality control methods utilized during fabrication of the control rods insure that design specifications are met. Boron-10 isotope fraction is checked on every lot of boron carbide. Stainless steel tubes

are inspected 100% ultrasonically and dimensionally, and chemical analyses and tensile tests on each lot of tubing are performed. Helium leak tests are performed after end plugs are welded. Weight of B_4C is checked by weighing the stainless steel tubes before and after filling with B_4C. Destructive tests on representative components are performed to establish adequacy of end plug welds and control rod structural welds.

Shutdown margin tests will be performed at the initial startup of the reactor and at any time reactivity alterations are made on the core (e.g., curtain removal). Tests on the mechanical components of the control system are discussed in Section X.

6.0 REACTOR VESSEL INTERNAL STRUCTURE

(Same as Unit 2 PDAR as amended)

6.1 Performance Objectives

The core structure components are designed to accommodate the loadings applied during normal operation and routine maneuvering transients considering both stress and deflection. Deflections are limited so that the normal functioning of the components under these conditions will not be impaired. In general, where deflection is not the limiting factor, the reactor internal structure design stress criteria is in accordance with the design criteria of ASME Boiler and Pressure Vessel Code, Section III.

The loading conditions which occur during an accident are also examined to determine the effect on the core structural components.

The core shroud, shroud support structure, and jet pump body which comprise a second vessel around the core within the reactor vessel are designed to maintain the reflooding capability following the loss of coolant accident.

The internal components of the reactor vessel are designed to withstand the stresses obtained under steady state and maneuvering conditions. They are also designed to preclude failure which would result in any part being discharged through the steam line in the event of a steam line break outside of the steam line isolation valve.

The structural components which guide the control rods are examined considering the loadings which would occur in either a steam line break accident or loss of coolant accident. It is the objective of the design of the core structural components that deformations produced by the accident loadings will not prevent insertion of control rods.

The design intent for the supporting structures for components within the reactor vessel which are important to core cooling is to assure that in the event of design basis accidents such components will retain their functional performance integrity.

6.2 Bases

The above objectives are necessary to assure that plant performance will at all times be predictable, including ability to operate control rods, to assess the thermal hydraulic performance of the fuel and to achieve continuity of core cooling under accident conditions.

Although core cooling following a postulated break in a recirculating pipe can be continued indefinitely by operating the core spray system, a margin of safety is provided by providing the capability to flood the core as an additional mechanism for core cooling.

6.3 Description of Reactor Vessel Internal Structures (Refer to Figure 12)

6.3.1 Core Shroud

The core shroud is a cylindrical, stainless steel structure which surrounds the core and provides a barrier to separate the upward core flow from the downward annulus flow. A flange at the top of the shroud mates with a flange on the steam separator assembly to form the core discharge plenum. The jet pump discharge nozzles penetrate the shroud below the core elevation to introduce the coolant to the inlet

plenum. At the bottom end, the shroud is welded to the reactor vessel to prevent direct flow from the inlet to the outlet nozzles of the recirculation loops. The shroud-to-vessel joint is designed to permit differential expansion between the vessel and the shroud and to carry the weight of the shroud, the steam separators, and the jet pump system. The shroud is designed to act as a vessel around the core which may be refilled with water in a loss-of-coolant accident.

6.3.2 Core Plate

Individual fuel assemblies in the core rest on small fuel support pieces mounted on top of the control rod guide tubes. Each guide tube, with its fuel support piece, bears the weight of four fuel assemblies and rests on the bottom head of the reactor vessel. The core plate provides lateral guidance at the top of each control rod guide tube.

6.3.3 Upper Core Grid

The upper core grid provides lateral support and alignment of the fuel assemblies. It consists of a grid located at the top of the core with four fuel assemblies contained in each opening. The grid assembly is supported from the core shroud. The upper core grid, core plate and fuel support piece provide positioning of the fuel assemblies and limit lateral and downward movement.

6.3.4 Jet Pumps

The 20 jet pumps are of stainless steel construction and consist of a driving nozzle, suction nozzle, throat or mixing section and diffuser. See Figure 30 and Appendix A. The jet pumps are arranged symmetrically in the outer periphery around the core. Each of the ten recirculation return lines supplies primary recirculation water to a pair of jet pumps. The recirculation lines are routed through the reactor vessel and terminate at the jet pump nozzle pieces. Flow dividers are installed in the jet pump nozzle piece to assure even flow distribution.

The diffuser is welded to the shroud support ring. A lateral support also secures the jet pump at the nozzle head but vertical motion from thermal expansion is allowed for at this point. The throat and diffuser entry are designed for removal. These pieces are sleeve fitted and held in place by the upper nozzle section which is attached to the riser by a nut-locking system. The manifolds and jet pump assemblies are fabricated from 304 stainless steel and the risers from inconel.

A detailed sectional view of the entire vessel assembly is shown on Figure 12.

6.3.5 Control Rod Guide Tubes

The stainless steel control rod guide tubes extend from the control rod drive thimbles in the lower vessel head to the core plate. Each tube is designed as a lateral guide for the control rod and as vertical support for the four fuel assemblies surrounding the control rod. The downward vertical loads from the fuel assemblies are directly transferred to the guide tubes and to the bottom vessel head. The guide tubes are locked into a sleeve, surrounding the control rod drive to transfer the upward thrust forces imposed by orifice pressure drop and control rod friction to the bottom vessel head. In addition the tubes provide protection for the control rods when withdrawn from the core and restrict the flow of water into the control rod gap. The guide tubes restrain vibrations resulting from the flow of water within and around the tubes.

6.3.6 Feed Water Sparger

The feed water sparger is located between the reactor vessel wall and the steam separator base. It consists of a perforated tube and skirt in the form of a circle, discharging into the down-comer. This arrangement permits the cooler feedwater to mix with the water flow from the steam separators and dryers before coming in contact with the reactor vessel. This mixing thus collapses voids and increases the jet pump suction subcooling.

6.3.7 Core Spray Sparger

The core spray sparger with spray nozzles is mounted along the inside of the core shroud in the space between the top of the core and the steam separator base. See further description in Section V-3.7.3.

6.3.8 Standby Liquid Sparger

The ring sparger for the injection of liquid neutron absorber is mounted below the core.

6.3.9 Steam Separator and Dryer

The steam separator assembly consists of a base into which are welded an array of stand-pipes, with a steam separator located at the top of each stand-pipe. The steam separator assembly rests on the flange at the top of the core shroud and forms the cover of the core discharge plenum region. The fixed centrifugal-type steam separators have no moving parts.

In each separator, the steam-water mixture rising through the stand-pipe impinges on vanes which impart a spin to establish a vortex which separates the steam from the water. Steam leaves the separator at the top and passes into the wet steam plenum below the dryer. The separated water enters the pool that surrounds the stand-pipes to enter the downcomer annulus.

The steam dryer assembly is mounted in the reactor vessel above the separator assembly and forms the top and sides of the wet steam plenum. Steam from the separators flows upward and outward through the drying structures. Moisture is removed and flows through a system of troughs and tubes to the pool surrounding the dryer and flows down the annulus to the outlet nozzles in the reactor vessel wall. Vertical guide tracks on the inside of the vessel provide alignment for the dryer assembly when being installed. For ease of removal, the steam separator assembly is bolted to the core shroud flange by long holddown bolts that extend above the separator for easy access during refueling. The separator base is guided to position on the core shroud flange with locating pins on blocks. The objective of the long-bolt design is to provide direct access to the bolts during reactor refueling operations, with minimum-depth underwater tool manipulation in the removal and installation of the assemblies.

V. PLANT SAFEGUARDS FEATURES

V. PLANT SAFEGUARDS FEATURES

1.0 SCOPE

(Same as Unit 2 PDAR as amended)

The design of the reactor system and the plant facilities includes a diversity of safeguards features which are provided to control the reactor process, to prevent the occurrence of accidents, or to mitigate the consequences of accidents. Those features of the core design which provide inherent safety characteristics, such as the Doppler and void coefficients, are discussed in Section IV and Section XI. Plant control features which are designed as protection against reactivity insertion and other accidents, including the reactor protection system, the control rod worth minimizer, the rod drop velocity limiter, the control rod thimble supports, the recirculation flow control interlocks and the standby liquid control system, are discussed in Section X. The containment and other accident mitigating features are described in this section.

The approach taken in the following is to describe the reactor primary system as the first barrier around the core, then to describe the primary containment, the secondary containment, and other systems appropriate to the control and or functional integrity of these systems. The structural and shielding requirements are also delineated in this section.

2.0 REACTOR PRIMARY SYSTEM

The reactor primary system includes the reactor vessel, recirculation piping, valves and pumps, and all connected piping to the first isolation valve. The reactor vessel contains the nuclear fuel, control rods, jet pumps, steam separators and dryers, and light water which serves as both moderator and coolant.

2.1 System Performance Objectives

(Same as Unit 2 PDAR as amended)

The major safety performance objective of the reactor primary system is to provide a barrier of high integrity to contain the reactor coolant and to prevent leakage of radioactive materials under normal and credible abnormal conditions over the operating life of the plant.

In order to meet the objective of providing a high integrity barrier, the reactor primary system is designed and constructed in accordance with applicable codes to meet the following:

1. Internal Pressure

   The table below gives principal pressures for the reference design of the reactor primary system.

Maximum Primary System Safety Valve Setting (Design Pressure +5%)	1313 psig
Design Pressure of Reactor Vessel	1250 psig
Lowest Pressure Setting of Primary System Safety Valves	1190 psig
Range of Primary System Relief Valve Operation	1080-1120 psig
Isolation Condenser System	1060 psig
Reactor Scram	1050 psig
Normal Operating Pressure	1000 psig

2. Temperature

   The design temperatures of components in the reactor primary system are established by the specific operating conditions for the components.

3. Materials Radiation Exposure

   The design shall be such that the vessel material neutron exposure at energy levels greater than 1 Mev will be limited to less than 1×10^{19} nvt over the 40 year operating life.

4. Jet Reaction Forces

   The reactor vessel and its support system is designed to accommodate the jet forces resulting from the postulated rupture of any pipe connecting to the reactor vessel.

5. Seismic Forces

   The reactor primary system is designed and constructed in accordance with the performance objectives for seismic design given in Section V-6.0 of this report.

6. Vibration

The design of the reactor primary system support structures include provisions for damping of flow induced vibration.

7. Design and Fabrication Code Requirements

The reactor primary system is designed and fabricated to meet the following as a minimum:

(a) Reactor Vessel - ASME Boiler and Pressure Vessel Code Section III, Nuclear Vessels, Subsection A.

(b) Pumps - ASME Boiler and Pressure Vessel Code Section III, Nuclear Vessels, Subsection C.

(c) Piping and Valves - ASA-B-31.1, Code for Pressure Piping.

2.2 Bases

(Same as Unit 2 PDAR as amended)

The coolant in the reactor primary system is under moderately high pressure and contains a large amount of energy. Substantial failure of the primary system could mean rapid loss of the coolant. Although loss of coolant will render the reactor effectively subcritical, lack of cooling will cause overheating of the core which could lead to fuel damage and fission product release. While means are provided to ensure continuity of adequate core cooling under emergency conditions, and a highly reliable containment system is provided to absorb accidental energy release and contain fission products which may be released, these provisions are over and above the main objective, which is to design and construct a reactor primary system having a very small probability of failure.

The following are specific bases corresponding to the above objectives:

1. Internal Pressure

The normal operating pressure of 1000 psig has been chosen on the basis of economic analysis for boiling water reactors. The reactor vessel design pressure of 1250 psig is determined by an analysis of margins required to provide a reasonable range for maneuvering during operation, with additional allowances to accommodate transients above the operating pressure without causing operation of the safety valves.

It is known from past experience and preliminary studies that the pressure margins as noted are adequate to accommodate transients above the reactor scram set point. Final settings and ranges of the safety valves will be determined during detailed design.

The design pressures for the piping and other primary system components are based on the reactor vessel design pressure with considerations for (a) static and dynamic heads due to elevation and pump discharge pressure, and (b) over-pressure allowances defined in paragraph N-910.3 of the ASME Boiler and Pressure Vessel Code Section III.

2. Temperature

The design temperature for various system components varies according to the specific operating condition. The design temperature for the reactor vessel is based on the saturation temperature corresponding to the design pressure plus any additional temperature rise due to radiation heating.

3. Materials Radiation Exposure

Above a threshold exposure of about 10^{17} nvt > 1 Mev fast neutron, radiation affects the mechanical properties of ferritic steel. The most important consideration is that of the change in the temperature at which ferritic steels break in a brittle rather than a ductile mode (referred to as the Nil Ductility Temperature or NDT). The NDT increases with increasing exposure. Extensive tests have established the magnitude of changes in the NDT as a function of the integrated neutron dosage. Exposures of 10^{19} nvt have been established as the design objective for reactor pressure vessels to provide adequate temperature margins for the life of the vessel.

4. Jet Reaction Forces

To minimize the extent of damage, the reactor pressure vessel and support structures are designed to withstand the forces that would be created by full area flow of any vessel nozzle with the reactor pressure vessel at design pressure.

5. Vibration

Flow induced vibrations could occur in the primary recirculation system under abnormal operating conditions. The design of the support structures includes provision to withstand the forces resulting from these vibrations.

6. Design Code Requirements

The ASME and ASA Codes formulate established and accepted criteria for the design, fabrication and operation for components of pressure systems. The reactor primary system is in conformity with these codes.

2.3 Description of Reactor Primary System

The reactor primary system is shown schematically in Figure 19. A more detailed description of the principal components follows:

2.3.1 Reactor Vessel

(Same as Unit 2 PDAR as amended)

The reactor vessel and its penetrations are shown in Figure 53.

The reactor vessel is a vertical cylindrical pressure vessel with an inside height between heads of approximately 68 feet, and an inside diameter of 20 ft 11 inches. The base plate material is high strength alloy carbon steel SA-302, Grade B. The vessel interior is clad with Type 304 stainless steel applied by weld overlay.

The design pressure is 1250 psig at 575°F. Wall thickness is approximately 6-1/8 inches of base metal and a minimum of 1/8 inch of cladding. A few degrees of temperature increase due to radiation heating is considered in the design. Fine-grained steels and advanced fabrication techniques are chosen to minimize radiation effects. The water in the annulus between the core shroud and the vessel, reduces radiation levels at the vessel wall. The estimated exposure for the 40 year life is approximately 10^{17} nvt for neutron energies greater than 1 Mev.

As a minimum the "as-fabricated" base material meets the requirements of ASME Code, Section III, N-330 at a temperature no higher than 40° F. In addition, this material has a NDT temperature no higher than 40° F as determined per ASTM E208. The initial NDT temperature of the reactor vessel material opposite the core will be no higher than 10° F.

The reactor vessel head is flanged to the vessel and sealed with two concentric silver plated, stainless steel, self-energizing O-rings. The area between the two O-rings is vented and monitored to provide an indication of leakage from the inner O-ring seal.

The control rod drive thimbles and the in-core instrumentation thimbles are welded to the bottom head of the reactor vessel.

Steam outlets are from the vessel body, thus eliminating the need to break the flanged joint in the steam lines when removing the vessel head for refueling. Safety valves are mounted on nozzles in the main steam lines.

The reactor vessel is supported by a steel skirt. The top of the skirt is welded to the bottom head of the vessel. The base of the skirt is continuously supported by a ring girder fastened to a concrete foundation, which carries the load to the reactor building foundation slab.

Stabilizer brackets, located below the vessel flange, are connected to tension bars with flexible couplings. The bars are then connected to the concrete structure within the drywell to limit horizontal vibration and to resist seismic and jet reaction forces. The bars are designed to permit radial and axial expansion.

2.3.2 Reactor Recirculating Loops

(Conforming amendment of Unit 2 PDAR required where indicated by ‡)

The reactor water recirculation system consists of two external recirculation pump loops and the reactor vessel internal jet pumps. Each loop contains a high capacity motor driven recirculating pump, motor operated gate valves for pump isolation and maintenance and recirculation flow measurement devices. The external recirculation loops are a part of the reactor primary system barrier. The internal jet pump system, together with the core shroud, provide a floodable vessel around the fuel; this feature is discussed further in Sections IV-6.3, V-3.7.3, and XI-3.

The main recirculating pumps are single-stage vertical centrifugal units with mechanical shaft seals. The pumps are driven by variable speed electric motors, which receive electrical power from variable frequency motor-generator sets.

Each recirculating pump is rated to deliver 45,000 gallons per minute. The design objective of these pumps is to provide simplicity and reliability for minimum maintenance. The arrangement of the pump loops within the drywell facilitate inspection, maintenance and repair under plant shutdown conditions. Drywell design permits removal of the pumps and motors. Instrumentation is provided to monitor pumps and motors during operation.

The piping is of all welded construction and will be designed, built and constructed to meet, as a minimum, the requirements of ASA - B 31.1, code for pressure piping and any applicable state regulations. ‡ The design pressure is 1377 psig at the suction, and approximately 1560 psig at the discharge of the recirculating pumps.

The recirculating pumps are equipped with mechanical shaft seals to minimize leakage. The pump casing will be designed in accordance with applicable sections of ASME Code Section III, Class C. Similar pumps are used on the Oyster Creek and Nine Mile Point Plants.

The valves are motor operated gate valves with double sets of valve stem packing to provide a highly reliable seal. The same type of valves and packing are being used on present operating plants.

2.3.3 Primary Steam and Auxiliary Systems Piping

Additional piping from the reactor vessel and recirculating system to the isolation valves is shown on Figure 19. The piping will be of all-welded construction and will, as a minimum, meet the requirements of ASA - B 31.1 and applicable state regulations. The design pressures will be determined during detailed design with consideration of additional static and dynamic heads.

2.4 Primary System Relief Valves

(Same as Unit 2 PDAR as amended)

2.4.1 Performance Objectives

The main objective of the primary system relief valves is to prevent operation of the reactor primary system safety valves upon reactor isolation.

2.4.2 Bases

The pressure transients anticipated upon reactor isolation occur more rapidly that it is possible to activate the isolation condenser system. Therefore the primary system relief valves are designed to relieve energy from the primary system rapidly enough to prevent the system pressure from rising to the set point of the primary system safety valves in event of sudden and complete isolation of the reactor primary system, until the isolation condenser system comes into effective operation and the decay heat steam generation falls within the capability of the isolation condenser system. (See Section V-5.2.)

2.4.3 Description

The primary system relief valves are solenoid actuated, pressure operated valves located on the steam lines, and discharge to the pressure suppression pool. These valves operate automatically on high reactor pressure approximately 20 to 60 psi above the pressure tripping point of the isolation condenser system, but below the setting of the primary system safety valves.

2.5 Primary System Safety Valves

(Same as Unit 2 PDAR as amended)

2.5.1 Performance Objectives

The objective of the primary system safety valves is to provide protection against overpressure to the reactor primary system in accordance with the ASME Boiler and Pressure Vessel Code Section III, Nuclear Vessels.

2.5.2 Bases

The ASME Boiler and Pressure Vessel Code requires that each vessel within the scope of Section III be protected from the consequence of pressure and temperature in excess of design conditions. The ASA-B 31.1 Code for Pressure Piping also requires overpressure protection.

The design basis for the total capacity of these valves is to accommodate the steam flow resulting from isolation of the reactor in the event the reactor does not scram. The safety valves are designed with the pressure set point in an expected range from 1190 psig for the valve with the lowest setting to 1313 psig for the valve with the highest setting

2.5.3 Description

The primary system safety valves ill be located on the steam lines inside the primary containment. The safety valves are of the balanced, spring-loaded type with set points independent of the back pressure. Approximately 20 valves are provided to accommodate the maximum reactor thermal output.

2.6 Surveillance and Testing

(Conforming amendment of Unit 2 PDAR required where indicated by ‡)

A resident quality control representative will follow the entire fabrication of the reactor vessel. Fabrication procedures, non-destructive testing and sample coupon testing required for the pressure vessel exceed those required by the ASME Code for Boiler and Pressure Vessels Section III, Nuclear Vessels.

Provision is made for the inspection of dissimilar metal welds on the outside of major nozzles.

‡ The "as-built" reactor primary system will be given a final system hydrostatic test at 1560 psig in accordance with Code Requirements prior to initial reactor startup. Thereafter, a hydrostatic test, not to exceed system operating pressure, will be made on the primary system following each removal and replacement of the reactor vessel head. The system will be checked for leaks, and abnormal conditions will be corrected before reactor startup. The minimum vessel temperature during hydrostatic test shall be at least 60°F above the calculated nil ductility transition temperature prior to pressurizing the vessel.

Vessel material surveillance samples are located within the core region to enable periodic monitoring of exposure and material properties.

All isolation valves on the primary system are to be functionally tested, periodically, for full closure within times as may be specified in the operating license.

The primary system safety valves shall be capable of removal for periodic testing.

3.0 PRIMARY CONTAINMENT SYSTEM

3.1 Scope

(Conforming amendment of Unit 2 PDAR required where indicated by ‡)

The purpose of the primary containment and its associated isolation and protective systems is to mitigate rapidly the consequences of postulated accidents involving the reactor primary system.

The design employs a pressure suppression containment system which houses the reactor vessel, the reactor coolant recirculating loops, and other branch connections of the reactor primary system as described in Section V-2.0 above. The pressure suppression system consists of a drywell, a pressure suppression chamber which stores a large volume of water, a connecting vent system between the drywell and the water pool, isolation valves, containment cooling systems, and other service equipment. In the event of a process system piping failure within the drywell, reactor water and steam would be released into the drywell air space. The resulting increased drywell pressure would then force a mixture of drywell atmosphere, steam, and water through the vents into the pool of water which is stored in the suppression chamber. The steam would condense rapidly and completely in the suppression pool, resulting in rapid pressure reduction in the drywell. Atmosphere which is transferred to the suppression chamber pressurizes the chamber and is subsequently vented to the drywell to equalize the pressures between the two vessels. Cooling systems are provided to remove heat from the reactor core, the drywell, and from the water in the suppression chamber and thus provide continuous cooling of the primary containment under accident conditions. Appropriate isolation valves are actuated during this period to ensure containment of radioactive materials within the primary containment which might be released from the reactor during the course of the accident.

The important design parameters of the primary containment reference design are summarized in Table V-1, and are consistent with the experimental data developed for the Bodega Bay pressure suppression containment system by the Pacific Gas and Electric Company at the Moss Landing Test Facility. See Section XI-4.

TABLE V-1

PRINCIPAL DESIGN PARAMETERS OF PRIMARY CONTAINMENT REFERENCE DESIGN

	Pressure suppression chamber internal design pressure	62 psig
‡		-1 psig
	Drywell internal design pressure	62 psig
		-2 psig
‡	Initial suppression chamber pressure rise	21 psi max
	Initial suppression chamber temperature rise	50° F
‡	Downcomer vent pressure loss factor	6.2
	Break area/vent pipe area	.019
	Submergence of vent pipe below pressure suppression pool surface	4 feet
‡	Drywell free volume	~158,000 ft^3
‡	Pressure suppression pool free volume	~119,500 ft^3
	Pressure suppression pool water volume	~106,000 ft^3

The design requirements and features of the primary containment components are described in the following sections.

An analysis of the integrated performance of the primary containment under accident conditions is given in Section XI-3.

3.2 Drywell

3.2.1 Performance Objectives

(Conforming amendment of Unit 2 PDAR required where indicated by‡)

The drywell is that part of the pressure suppression type containment system which houses the reactor vessel, reactor coolant recirculation loops, and their branch connections and branch connection isolation valves. Its preformance objectives are:

a. To withstand the peak transient pressure which could occur due to the postulated rupture of any reactor primary system pipe inside the drywell.

b. To channel postulated rupture flows to the suppression system vent lines without the introduction of major flow resistance.

c. To withstand a jet force equal to that associated with flow from the largest local pipe or connection without containment failure.

‡ d. To provide a system of recirculation pipe supports designed to limit excessive motion which would jeopardize containment integrity.

e. To limit primary containment leakage during and following a postulated rupture of the reactor primary system to a value which is substantially less than leakage rates which would result in off-site does approaching the reference doses in 10 CFR 100.

f. To include in the design provisions for periodic leakage tests.

3.2.2 Bases

(Conforming amendment of Unit 2 PDAR required where indicated by‡)

In order to establish a design basis for a "pressure suppression" type containment with regard to pressure rating and steam condensing capability, maximum rupture size of the reactor primary system must be defined. In addition, the potential location of all postulated ruptures must be defined as a basis for considering local effects in the drywell. Selection of a rupture of the largest pipe connected to the reactor vessel provides a limiting condition for determining the maximum gross drywell pressure and the determination of the condensing capability of the pressure suppression system. For the determination of local pressure and jet force effects, the rupture of the largest local pipe is also considered with regard to the drywell design.

The design pressure is established on the basis of the Bodega Bay pressure suppression tests. See Section XI-4. The design pressure is primarily a function of the postulated rupture area, the drywell to suppression chamber vent area and configuration, vent submergence below the water level in the suppression pool, and the final equilibrium pressure in the pressure suppression chamber.

In establishing the containment design, circumferential pipe ruptures are assumed with sufficient distance separation to allow full potential flow from each end of the pipe. Pipeline flow restrictions are considered in establishing rupture flow rates. Since the assumed initial rupture rate and the accompanying reactor depressurization is so rapid, progressive failure of the piping is not a limiting factor in the containment design.

All large pipes which penetrate the containment are designed so that they have anchors or limit stops located outside of the containment to limit the movement of the pipe. These stops are designed to withstand the jet forces associated with the clean break of the pipe and thus maintain the integrity of the containment. Jet forces which may act on the containment are taken as equal to reactor pressure acting directly on the containment over an area equal to the cross-sectional area of the largest local pipe or nozzle.

The space between the containment vessel and the concrete is controlled so that in areas which are backed up by concrete and are subjected to jet forces the integrity of the containment will not be violated. Where concrete is not available, such as at the vent openings, barriers are put across these openings for jet protection.

The quality control of the fabrication of the pipe and the inspection of the pipe and the conservative design of the pipe is given the same degree of attention as the reactor vessel for all pipe associated with primary water. This approach to prevent pipe failure is substantiated by the long history in the utility industry during which time no such circumferential pipe failures have been recorded for the piping materials to be used for this plant.

If a pipe leak should occur, means for detecting even small leaks are available in the present design so that proper action could be taken before they could develop into an appreciable break.

Therefore, based upon the conservative piping design utilizing proven engineering design practice, the proper choice of piping materials, the use of conservative quality control standards and procedures for piping fabrication and installation, and extensive studies of modes of pipe failure, it is concluded that pipes will not break in such a manner as to bring about movement of the pipes sufficient to damage the primary containment vessel. Nevertheless, the recirculation line within the primary containment will be provided with a system of pipe supports designed to limit excessive motion associated with a pipe split or circumferential break. The design details of this support system are still being developed. The present concept utilizes a number of supports and limit stops which will permit thermal expansion of the pipe. Both types of breaks, the circumferential break or the longitudinal split, are being considered in the support and limit stop arrangement.

Although it has been concluded that with the application of conservative piping design and proven engineering practices pipes will not break in such a manner as to bring about movement of pipes sufficient to damage the primary containment vessel, the design of the containment and piping systems does consider the possibility of missiles being generated from the failure of flanged joints such as valve bonnets, valve stems, recirculation pumps, and from instrumentation such as thermowells. It is the design philosophy of the General Electric Company that there be no missiles which will penetrate the containment. This is accomplished in practice through the specific design of the containment and contained systems, which takes into account the potential for generation of missiles and minimizes the possibility of containment violation. In considering potential missile sources of this nature at the current stage of detailed design, none have been found against which further design action is required. However, if such a case is found as the design progresses, appropriate design action will be undertaken regarding the potential missile source to maintain containment integrity.

The most positive manner to achieve missile protection is through basic plant arrangement such that, if failure should occur, the direction of flight of the missile is away from the containment vessel. The arrangement of plant components takes this possibility into account even though such missiles may not have enough energy to penetrate the containment. Analyses have led to the conclusion that instruments, ejected

thermowells, etc., if they should become missiles, would not have sufficient energy to penetrate the containment. It has also been concluded that large, massive, rotating components such as the reactor recirculating pump motors would not have sufficient energy to move this mass to the containment wall.

Also, pump impellers and motor rotors upon failure would be contained within their housings and not generate missiles. There is the potential for valve bonnets to become missiles based on the assumption of failure of all bonnet bolts. This requires instantaneous, clean severence of all bolts, without any overturning motion. The damage potential is dependent upon the size of the valve and system in which the valve is located. Therefore, valve arrangement is important and is taken into consideration in the overall plant design. Large valve bonnets, such as are on the recirculation line valves, appear to have the capability to contribute to potential missiles from bonnet bolt failure. If it is necessary to locate such valves where containment protection is required there are many design actions available, such as welding the bonnets, providing deflector plates, adding bracing or keepers, etc. Although, to date, analyses have shown no need to take any extraordinary design actions, the designs are reviewed constantly for such a possibility.

In addition to the care with which equipment is oriented with regard to missiles special care is taken in component arrangements to see that equipment associated with engineered safety systems such as the core spray and the containment spray are segregated in such a manner that the failure of one cannot cause the failure of the other or that the failure of any component which would bring about the need for these engineered safeguard systems will not render the safeguard system inoperable. Additionally, the control rod drive mechanisms are located in a concrete vault that provides protection from potential missiles. The suppression chamber has no source of internal or external missile generation and the vent pipes joining it with the drywell are protected by the jet deflectors.

The primary containment vessels are completely enclosed in a reinforced concrete structure having a thickness of 4-6 feet (See Figure 3). This concrete structure, in addition to serving as the basic biological shielding for the reactor system, also provides a major mechanical barrier for the protection of the containment vessels and reactor system against potential missiles generated external to the primary containment.

The primary containment shall be constructed in such manner that it can be verified initially that at the maximum pressure resulting from the design basis accident the leakage rate is not in excess of 0.5% per day of the free volume of the primary containment. This is substantially less that leakage rates which would result in off-site doses approaching the reference doses in 10 CFR 100.

3.2.3 Description of the Drywell

(Conforming amendment of Unit 2 PDAR required where indicated by ‡)

The drywell as shown in Figure 3 is a steel pressure vessel with a spherical lower portion, 66 feet in diameter, and a cylindrical upper portion, 37 feet in diameter. The overall height is approximately 113 feet. The design, fabrication, inspection and testing of the drywell vessel will comply with requirements of the ASME Pressure Vessel Code, Section III, Subsection B, "Requirements for Class B Vessels", which pertain to containment vessels for nuclear power plants. The steel head and shell of the drywell is fabricated of SA-212 or SA-201 plate or similar material manufactured to A-300 requirements. The free volume of the drywell is approximately 158,000 cubic feet.

The drywell is designed for an internal pressure of 62 psig coincident with a temperature of 281°F, plus the dead and live loads imposed on the shell. This design pressure contains a substantial margin over the pressure requirements indicated in the tests performed for the Bodega Bay Plant by Pacific Gas and

Electric Company. Those tests results indicated that for a break of a reactor recircirculation loop in the drywell the maximum pressure during the reactor blowdown would be 52 psig. Thus, the design of the drywell for this unit includes a 10 psi margin as an additional safeguards feature. The drywell will also withstand an external pressure of about 2 psig. Thermal stress in the steel shell due to temperature gradients are taken into account in the design.

Special precautions not required by Codes will be taken in the fabrication of the steel drywell shell. The plate will be preheated to a minimum temperature of 200 °F prior to welding of all seams whose thickness exceeds 1-1/4 inches, regardless of surrounding air temperature. Preheat at a minimum of 100 °F will be applied prior to welding of all seams 1-1/4 inches or less in thickness if the ambient temperature falls below 40° F. Charpy V-notch specimens will be used for impact testing of plate and forging materials to give assurance of proper material properties. Plates, forgings and pipe associated with the drywell have an initial NDT temperature of 0° F when tested in accordance with the appropriate code for the materials. It is intended that the drywell will not be pressurized or subjected to substantial stress at temperatures below 30° F. During operation of the unit temperature of the drywell will be of the order of 135 °F.

The drywell is enclosed in reinforced concrete for shielding purposes and to provide additional resistance to deformation and buckling of the drywell over areas where the concrete backs up the steel shell. Above the transition zone the drywell is separated from the reinforced concrete by a gap of approximately 2 inches. Shielding at the top of the drywell is provided by a removable, segmented, reinforced concrete shield plug.

In addition to the drywell head, one double door air lock and one bolted hatch are provided for access to the drywell. The locking mechanisms on each air lock door are designed so that a tight seal will be maintained when the doors are subjected to either internal or external pressure. The doors are mechanically interlocked so that neither door may be operated unless the other door is closed and locked. The drywell head and hatch cover are bolted in place and sealed with gaskets. The seals on the doors and the hatch are capable of being tested for leakage.

The drywell will not be entered during power operation, but access is permissible during a hot standby with the reactor subcritical. Provisions are made to supply breathing air to personnel while in the drywell if necessary. Normal environment in the drywell during plant operation is essentially atmospheric pressure and an ambient temperature of about 135° F.

This temperature is maintained by recirculating the drywell air across forced draft atmosphere cooling units which, in turn, are cooled by a closed loop cooling water system.

3.2.4 Surveillance and Testing

(Same as Unit 2 PDAR as amended)

Fabrication procedures, non-destructive testing and sample coupon tests will be in accordance with the ASME Code for Boilers and Pressure Vessels Section III, subsection B. Provisions will be made to test the integrity of the primary containment system during construction phases and after startup of the station. These tests will include a pneumatic test of the drywell and suppression chamber at 1.15 times their design pressure in accordance with Code requirements.

The leakage rate for the primary containment is based upon testing both vessels simultaneously at the same pressure. After complete installation of all penetrations in the drywell and suppression chamber, these vessels will be pressurized to the calculated peak accident pressure and measurement ments taken to verify that the integrated leakage rate from the vessel does not exceed 0.5% per day. Since both the drywell and suppression chamber are designed for 62 psig, it is possible to test these vessels simultaneously at the same pressure and without the necessity of providing temporary closures to isolate the suppression chamber from the drywell. The necessary instrumentation is installed in the vessel to provide the data required to calculate and verify the leakage rate.

It is planned to initially conduct leakage rate tests at several pressures to establish a leakage rate curve. Subsequent to the integrated leakage rate test of the primary containment discussed above, and prior to initial plant startup, a series of leakage rate tests can be conducted to define the leakage behavior of the containment system as a function of pressure with the capability to test the leak-tightness of containment system penetrations as indicated below. It is anticipated that if integrated leakage rate tests during the life of the plant are required, they can be conducted at a pressure which is less than containment system design pressure. The leak rate at higher pressures may then be extrapolated from the curve. A composite allowable leakage rate and the test pressure for these tests can be specified after review of the results of the initial series of tests. The allowable integrated leakage rate will consider the permissible post-incident dose rates.

All containment closures which are fitted with resilient seals or gaskets are separately testable. Electrical penetrations are also separately testable. Section V-3.4.4 describes these individual tests. Pipe penetrations which must accommodate thermal movement are provided with expansion bellows. The bellows expansion joints are designed for the containment system design pressure and can be checked for leak tightness when the containment system is pressurized. Provisions have also been made to individually test these penetrations as discussed in Section V-3.4.4.

It will be possible to periodically pressurize and test the leak-tightness of the portions of the containment and core cooling systems which are exterior to the primary containment vessels. It will not be necessary to separately measure the leakage rate from the containment and core cooling systems since these systems will be pressurized during the leakage rate tests. Leakage from these systems will automatically be included in the overall leakage rate for the primary containment system.

3.3 Pressure Suppression Chamber and Vent System

3.3.1 Performance Objectives

(Same as Unit 2 PDAR as amended)

The performance objective of the vent system, which connects the drywell and suppression chamber, is to conduct flow from the drywell to the suppression chamber and to distribute this flow uniformly throughout the pool following a postulated reupture in housed drywell equipment.

The objective of the suppression chamber is to receive this flow, condense the steam portion of this flow, and contain the non-condensable gases and fission products that may be driven into the chamber during the postulated rupture sequence.

The suppression chamber-to-drywell vacuum breakers limit the pressure differentials between the drywell and suppression chamber during the various potential post-accident containment cooling modes.

3.3.2 Bases

(Same as Unit 2 PDAR as amended)

The basis for design of these systems is mainly an extension of the design basis given for the "pressure suppression" type containment described in conjunction with the drywell (Section 3.2.2). The vent system sizes, flow resistance and flow distribution arrangement is established on the basis of pressure suppression system tests, as are the suppression chamber design parameters.

The vent system flow area bears a direct relationship to the largest postulated rupture flow area for fixed drywell and suppression chamber design pressures and vent system geometrical configuration. The vent system internal design pressure corresponds to the drywell design pressure at 62 psig. The vent discharge headers and piping are designed to withstand the jet reaction force caused by flow discharge into the suppression pool.

The vacuum breakers, which connect the suppression chamber and drywell, are sized on the basis of the Bodega pressure suppression system tests. The vacuum breaker flow area is proportional to the flow area of the vents connecting the drywell and suppression pool. Their chief purpose is to prevent excessive water level variation in that portion of the vent discharge lines which is submerged in suppression pool water prior to a large system rupture in the drywell. The Bodega tests regarding vacuum breaker sizing were conducted by simulating a small system rupture, which tended to cause vent water level variation, as a preliminary step in the large rupture test sequence. The vacuum breaker capacity selected on this test basis is more than adequate (typically by a factor of four) to limit the pressure differential between the suppression chamber and drywell during post accident drywell cooling operations to a value which is within suppression system design values.

Sufficient water is provided in the suppression pool to accommodate the initial energy which can transiently be released into the drywell from the postulated pipe failure. The suppression chamber is sized to contain this water, plus the water displaced from the reactor primary system together with the free air initially contained in the drywell. The temperature rise in the pool water and the peak pressure is held within the limits established by pressure suppression tests as conducted at Moss Landing.

The allowable primary containment leakage rate is defined in Section V-3-1.

3.3.3 Description of the Pressure Suppression Chamber and Vent Pipes

(Conforming amendment of Unit 2 PDAR required where indicated by‡)

Large vent pipes form a connection between the drywell and the pressure suppression chamber. A total of 8 circular vent pipes are provided, each having a diameter of 8 feet. The vent pipes are designed for an internal pressure of approximately 62 psig coincident with a temperature of 281° F, and an external pressure of about 1 psig. Jet deflectors are provided in the drywell at the entrance of each vent pipe to prevent possible damage to the vent pipes from jet forces which might accompany a pipe break in the drywell. The vent pipes will be fabricated of SA-201 or SA-212 steel manufactured to A-300 requirements, or similar material, and will comply with requirements of the ASME Pressure Vessel Code, Section III, Subsection B. The pipes are enclosed with sleeves and are provided with expansion joints to accommodate differential motion between the drywell and suppression chamber.

The pressure suppression chamber is a steel pressure vessel in the shape of a torus below and encircling the drywell, with a major diameter of approximately 109 feet and a cross sectional diameter of 30 feet. It contains approximately 106,000 cubic feet of water and has a net air space volume above the water pool of approximately 119,500 cubic feet. The suppression chamber is held on supports which transmit vertical and seismic loading to the reinforced concrete foundation slab of the reactor building. Space is provided outside of the chamber for inspection and maintenance. The drywell vents are connected to a 4 foot 10 inch diameter vent header in the form of a torus which is contained within the airspace of the suppression chamber. Projecting downward from the header are 96 downcomer pipes, 24 inches in diameter and terminating 4 feet below the water surface of the pool. The vent header has the same temperature and pressure design requirements as the vent pipes. Baffles are provided in the suppression chamber to ensure proper interaction of the vent pipe discharge with the suppression pool water. Vacuum breakers, which discharge from the suppression chamber into the drywell prevent a backflow of water from the suppression pool into the vent header system. Baffle arrangements, like vacuum breaker sizing, are based on Moss Landing test configurations.

The toroidal suppression chamber is designed for an internal pressure of 62 psig coincident with a temperature of 281° F. It is designed to the same material and code requirements as the steel drywell vessel, and the material will have an initial NDT temperature of 0 °F. ‡

A vent from the primary containment is provided which will normally be closed, but which will permit the vent discharge to be routed to the standby gas treatment system so that release of gases from the primary containment is controlled, and that the effluents are filtered and monitored before disposal through the 310 foot stack.

Access to the pressure suppression chamber for inspection is privided from the reactor building. The present design provides for 3-foot diameter manhole entrances with double gasketed bolted covers. The access ports will normally be bolted closed during power operation and will be opened only when the reactor primary coolant temperature is below 212°F and the pressure suppression system is not required to be operational.

3.3.4 Surveillance and Testing

(Same as Unit 2 PDAR as amended)

The testing of the suppression chamber and vent pipes is described in Section V-3.2.4 above. The inside of the suppression chamber may be visibly inspected for corrosion during periods when the condition of the reactor is such that the suppression chamber is not required.

3.4 Penetrations of the Primary Containment

3.4.1 Performance Objectives

(Same as Unit 2 PDAR as amended)

Openings in the primary containment which permit the entry of pipes, ducts, electrical cable, the traveling in-core probe (TIP) guide tubes, and other openings for personnel and equipment access are designed to provide containment which is compatible with the integrated containment performance objectives stated in Section V-3.2 and 3.3.

The penetrations shall have the following design characteristics:

(a) They are capable of withstanding the peak transient pressure which could occur due to the postulated rupture of any reactor primary system pipe inside the drywell.

(b) They are capable of withstanding jet forces equal to that associated with flow from the largest local pipe or connection without failure.

(c) They are capable of accommodating thermal stresses which may be encountered during all modes of operation without failure.

(d) To the extent practical and necessary, the penetrations are capable of being individually leak tested.

3.4.2 Bases

(Same as Unit 2 PDAR as amended)

In order to minimize post-accident containment leakage, the containment penetrations are designed to withstand the normal environmental conditions which may prevail during plant operation, and to retain their integrity during the following postulated accidents.

Pipe lines which penetrate or open into the containment shell, and which are capable of exerting a reaction force due to line thermal expansion or containment movement which cannot be restrained by the containment shell are provided with a bellows expansion seal.

If necessary these lines are anchored outside the containment to limit the movement of the line relative to the containment. The bellows accommodates the relative movement between the pipe and the containment shell. This design is utilized to assure reasonable integrity of the flexing penetration during plant operation.

Pipe lines which penetrate the containment where the reactive forces can be restrained by the containment shell are provided with full strength attachment welds between the pipe and the containment shell. These penetrations are designed for long-term integrity without the use of a bellows seal.

Electrical penetrations require special design consideration to achieve zero leakage because of the design restriction imposed by creepage characteristics of electrical insulation.

TIP guide tubes and their penetrations also require special design considerations due to the fact that they are the means of passage from the interior of the reactor vessel to the reactor building for the TIP fission chamber and its electro-mechanical drive cable.

A personnel access lock is provided with interlocked double doors so that access may be made to the containment while the reactor primary system is pressurized. Double doors are provided to assure that containment integrity is effective while access is being made.

Access hatches are sealed in place, using flexible double seals or gaskets to assure leak-tightness. These openings are closed at all times when containment is required.

Inspection and surveillance provides additional assurance of integrity and functional performance of the penetrations. For this reason, provisions are made to leak test individually all electrical penetrations, the personnel access lock, the access hatches, and those pipe penetrations having bellows seals. This can be accomplished without pressurizing the entire containment system. Provisions are made in the design of the integrated containment system to monitor the gross leakage of the primary containment as a further indication that all penetrations are sealed during plant operation.

3.4.3 Description of the Primary Containment Penetrations

(Conforming amendment to Unit 2 PDAR required where indicated by ‡)

The primary containment is penetrated at several locations to permit the passage of piping, instrument lines, ventilation ducts, and electrical leads into the containment. Penetrations are also provided for personnel access and for refueling. The approximate number and size of these penetrations is shown in Table V-2 and Figure 66.

a. Pipe Penetrations

Two general types of pipe penetrations are provided — those which must accommodate thermal movement, and those which experience relatively little thermal stress.

The piping penetrations for which movement provisions are made are the high temperature lines such as the steam pipes and other reactor system lines. A typical penetration of this type is shown in Figure 48. The penetration sleeve passes through the concrete and is welded to the primary containment vessel. The process line which passes through the penetration is free to move axially, and a bellows expansion joint is provided to accommodate the movement. A guard pipe immediately surrounds the process line which is designed to protect the bellows and maintain the penetration seal should the process line fail within the penetration. Insulation and air gaps are provided to reduce thermal stress. A seal arrangement is also provided which will permit periodic leakage testing of these penetrations.

TABLE V-2

PRINCIPAL PENETRATIONS OF PRIMARY CONTAINMENT AND ASSOCIATED ISOLATION VALVES

	Type of Service	Number of Lines	Approx. Pipe Size-inches	Inner Isolation Valves Per Line (Inboard of Primary Containment Shell) Number	Power	Closing Signal	Closure Time Sec.	Normal Status	Outer Isolation Valves Per Line (Outboard of Primary Containment Shell) Number	Power	Signal	Closure Time Sec.	Normal Status
‡	To Isolation Condenser (Steam)	2	14	1	AC	E, B	60	Open	1	DC	E, B	60	Open
‡	From Isolation Condenser (Water)	2	12	1	AC	E, B	60	Open	1	DC	(A to open)	--	Closed
	Standby Liquid Control System	1	2	1	Check	-	--	Closed	1	Check	-	--	Closed
	Feedwater	2	18	1	Check	-	--	Open	1	Check	-	--	Open
	From Reactor Cleanup	1	6	1	Check	-	--	Open	1	AC	B	40	Open
‡	To Reactor Cleanup	1	6	1	AC	B, I	40	Open	1	DC	B, I	40	Open
	Closed Cooling Water Inlet	1	8	1	Check	-	--	Open	-	--	-	--	--
	Closed Cooling Water Outlet	1	8	0	--	-	--	--	1	AC	RM	--	Open
	Steam Lines	4	20	1	AC-DC	B, C, D	3-10	Open	1	AC-DC	B, C, D,	3-10	Open
‡	Steam Line Drain	1	2	1	AC	B, C, D	--	Closed	1	DC	RM	--	Closed
‡	Sample Line - Recirculation Loop	1	1										
‡	Shutdown Cooling Inlet	2	14	1	AC	B, J	--	Closed	1	DC	RM	--	Closed
‡	Shutdown Cooling Outlet	2	16	1	AC	B, J	--	Closed	1	DC	RM	--	Closed
	Equipment Drain Sump	1	3	0	--	-	--	--	2	DC	F	10	Open
‡	Drywell Floor Drain Sump	1	3	0	--	-	--	--	2	DC	F	10	Open
‡	Service Water Supply	1	3	1	Check	-	--	Closed	1	Check	-	--	Closed
	Control Rod Drive Inlet	185	1	see note	AC	-	--	--	-	--	-	--	--
	Control Rod Drive Outlet	185	3/4	see note	--	-	--	--	1	AC	-	--	--
‡	Control Rod Hyd. Sys. Return	1	4	1	Check	-	--	--	1	Check	-	--	--
	Core Spray Inlet to Reactor	2	10	1	Check	-	--	Closed	2	AC	G	--	Closed
‡	Head Spray - Reactor Vessel	1	2	1	Check	-	--	Closed	1	AC	B	--	Closed
‡	Containment Cooling to Suppression Pool*	2	8	1	Check	-	--	Closed	-	--	-	--	--
‡	Core Spray, Cont. Cooling from Supp. Pool*	3	20	0	--	-	--	--	-	--	-	--	--
‡	Containment Cooling Inlet to Suppression Pool (Test Line)*	2	16	-	--	-	--	--	1	--	-	--	--
‡	Containment Cooling to Drywell	2	16	1	Check	-	--	Closed	-	--	-	--	--
‡	Vacuum Breaker - Reactor Bldg. To Supp. Pool*	1	20	0	--	-	--	--	1	Check	-	--	Closed
‡	Vacuum Breakers - Suppression Chamber to Drywell	6	24	None	--	-	--	--	None	--	-	--	--
‡	Drywell Ventilation Inlet-Outlet to Drywell	2	18	-	--	-	--	--	2	Air	F, B	10	Closed
‡	Construction Drain*	2	8	-	--	-	--	--	-	--	-	--	Closed
‡	Instrumentation and Electrical	61	12	None	--	-	--	--	None	--	-	--	--
‡	Instrumentation*	8	1	None	--	-	--	--	None	--	-	--	--
‡	Instrumentation - Traveling Incore Probe	5	6	1	DC	RM	--	Open	1	AC	RM	--	Closed
	Instrument and Breathing Air	2	1	None	--	-	--	--	Check	--	-	--	Open
‡	Pressure Instrumentation	63	1	None	--	-	--	--	1	Check	-	--	--

*Denotes Suppression Chamber Location

Personnel and Equipment Openings:
- Drywell Head - 1
- Personnel Access Lock - 1
- Suppression Chamber Manholes - 2
- Equipment Access Hatch - 2

Signals which close isolation valves:
- A - High Reactor Vessel Pressure
- B - Low Low Reactor Vessel Water Level
- C - High Radiation in Main Steam Lines
- D - Main Steam Line Break
- E - High Reactor Building Pressure
- F - High Drywell Pressure
- G - Low Low Water Level in Vessel and Low Reactor Pressure cause these valves to open
- H - Remote manual closure on high radiation signal
- I - Break, Clean-up System ‡
- J - Break, Shutdown Cooling System ‡
- RM - Remote Manual

NOTE: Control rod hydraulic lines can be isolated by the solenoid valves outside the primary containment. Lines that extend outside the primary containment are of small size and terminate in a system which is designed to prevent out-leakage. Solenoid valves are normally closed but open on rod movement and during reactor scram.

(Conforming amendment of Unit 2 PDAR required where indicated by ‡)

Figure 48A represents the penetration and isolation valve configuration for the main steam line. The steam line as it passes through the drywell containment vessel and the concrete biological shield is enclosed in a guard pipe that is attached to the main steam line through a multiple flued head fitting. This fitting is a one-piece forging with integral flues or nozzles and will be designed to meet all requirements of the ASME Pressure Vessel Code, Section VIII. The forging shall be radiographed and ultrasonically tested as specified by this code. The guard pipe and fittings are designed to the same pressure requirements as the steam line. The steam line penetration sleeve is welded to the drywell and extends through the biological shield where it is welded to a bellows which in turn is welded to the guard pipe. The bellows assembly accommodates the thermal expansion of the steam pipe and drywell relative to the steam pipe. The steam pipe is guided through pipe supports at each end of the penetration assembly to allow steam pipe movement parallel to the penetration and to limit pipe reactions of the penetration to allowable stress levels. Two isolation valves are provided. The external valve is located as close to the drywell penetration sleeve as practical, and the inside valve is located downstream of the reactor vessel safety valves.

The design of the pipe penetration support system takes into account the simultaneous stresses associated with normal thermal expansion, live and dead loads, seismic loads, and loads associated with a loss of coolant accident within the drywell to limit reactions on the penetration. For these conditions the resultant stresses in the drywell penetration do not exceed the code allowable design stress. For failures of the steam pipe taken at random, the design takes into account the loadings given above in addition to the jet force loadings resulting from the failure. The resultant stresses in the pipe and penetration for this condition does not exceed 90 percent of the material yield stress.

The cold piping and ventilation duct penetrations are welded directly to the sleeves, as shown in Figure 48. Bellows and guard pipes are not necessary in this design, since the thermal stresses are small and are accounted for in the design of the weld joints.

b. Electrical Penetrations

The electrical penetrations include electrical power, signal, and instrument leads. Typical penetrations are shown in Figures 49 and 50. Although two types of electrical penetrations are shown, basically they are of the same design. The penetrating sleeve is welded to the primary containment vessel, and the flanged ends are bolted and sealed with a soft gasket material. A bonding resin is utilized in the seals where the cable emerges from the flange. This arrangement provides a leak-tight configuration which is leak-tested after installation, and provides a means for periodic leakage testing.

c. TIP Penetrations

A total of five insert guide tubes are provided which pass from the reactor building into the primary containment. Penetration of the insertion guide tubes through the primary containment are sealed by means of brazing which meets the requirements of the ASME Boiler and Pressure Vessel Code, Section VIII. These seals would also meet the intent of Section III of the Code even though the Code has no provisions for qualifying the procedures or performances.

d. Personnel and Equipment Access

One personnel access lock is provided for access to the drywell. The lock has two gasketed doors in series, and the doors are designed and constructed to withstand the drywell design pressure. The doors are mechanically interlocked to ensure that at least one door is locked at times when primary containment is required. The locking mechanisms are designed so that a tight seal will be maintained when

the doors are subjected to either internal or external pressure. The seals on this access opening are capable of being tested for leakage.

An equipment access hatch with double testable seals is also provided. This hatch is bolted in place.

e. Access to the Pressure Suppression Chamber

Access to the pressure suppression chamber is provided at two locations from the reactor building. The present design consists of 3-foot diameter shielded manhole entrances with double gasketed bolted covers connected to the chamber by a 3 foot diameter steel pipes. The access ports will be bolted closed when primary containment is required, and will be opened only when the primary coolant temperature is below 212° F and the pressure suppression system is not required to be operational.

f. Access for Refueling

The top portion of the drywell vessel is removed during refueling operations. The head is held in place by bolts and is sealed with a double seal arrangement. The head is bolted closed when primary containment is required, and will be opened only when the primary coolant temperature is below 212° F and the pressure suppression system is not required to be operational.

The double seal on the head flange provides a method for determining the leak tightness after the drywell head has been replaced.

3.4.4 Surveillance and Testing

(Conforming amendment of Unit 2 PDAR required where indicated by ‡)

With the exception of the pipe penetrations which are welded directly to the primary containment shell, it is possible to leak test individual containment penetrations without pressurizing the entire containment system. Testing may be accomplished by pressurizing the penetration between the double seals utilizing the pressure tap. Leak detection may then be accomplished either by the use of soap suds or by pressure decay techniques.

Pipe penetrations which must accommodate thermal movement are provided with expansion bellows. The bellows expansion joints are designed for the containment system design pressure and can be checked for leak tightness when the containment system is pressurized. In addition, these joints are provided
‡ with a second seal and test tap so that the space between the seals can be pressurized to the calculated
‡ peak accident pressure to permit testing the individual penetrations for leakage.

Leakage through valves installed in pipe lines which open into the containment can be detected by pressurizing between pairs of containment isolation valves. Leakage through valves installed in pipe lines that connect to the reactor primary system may be determined when the reactor primary system is pressurized with the containment isolation valves closed.

Electrical penetrations will also be provided with double seals and will be separately testable at 62 psig. The test taps and the seals will be so located that the tests of the electrical penetrations can be conducted without entering or pressurizing the drywell or suppression chamber.

All containment closures which are fitted with resilient seals or gaskets will be separately testable at the full design pressure of 62 psig to verify leak tightness. The covers on flanged closures, such as the equipment access hatch cover, the drywell head, access manholes and personnel lock doors will be provided with double seals and with a test tap which will allow pressurizing the space between the seals without pressurizing the entire containment system.

In addition, provision will be made so that the space between the air lock doors can be pressurized to full drywell design pressure. Since both doors on the lock will swing into the drywell vessel, it will be necessary to provide temporary structural members to brace the inner door during this test.

3.5 Isolation Valves

3.5.1 Isolation Valve Performance Objective

(Conforming amendment of Unit 2 PDAR required where indicated by ‡)

Isolation valves are provided on the reactor primary system pipe and other ducts or pipe which penetrate the primary containment in order to provide a containment barrier in these lines when required which is as effective as the primary containment shell.

The criteria on number, type and location of valves for the various categories of penetrations are as follows:

1. Process pipes which connect to the reactor primary system, and pipes or ducts which penetrate the primary containment and are open to the drywell free air space shall be provided with at least two isolation valves in series.

   Valves in this category shall be designed to close automatically from selected signals, and shall be capable of remote manual actuation from the control room. (Refer to Table V-2.)

2. The valves will be physically separated. On lines connecting to the reactor primary system, one valve shall be located inside the primary containment and the second outside the primary containment as close to the primary containment wall as practical.

3. Lines which penetrate the primary containment and which neither connect to the reactor primary system nor which open into the primary containment, shall be provided with at least one valve which may be located outside the primary containment.

   Valves in this category shall be capable of manual actuation from the control room.

The following are exceptions to the above isolation valve arrangements.

1. Automatic isolation valves, in the usual sense, will not be used on the inlet lines of the core spray, containment spray, and feedwater water systems, since operation of these systems is essential following a loss-of-coolant accident. Since the normal flow of water in these systems is inward to the reactor vessel or primary containment, check valves located in these lines, inside the drywell, will provide automatic isolation when necessary. The check valves are powered by reverse (outward) fluid flow.

2. ‡ One automatic isolation ball valve is provided on each TIP system guide tube outside the primary containment. A second shear isolation valve is provided inside the containment and requires manual actuation.

3. Automatic isolation valves will not be provided on the outlet lines from the pressure suppression chamber to the core cooling and containment cooling pumps. These lines return to the containment and are required to be open during post accident conditions for operation of these systems.

4. No automatic isolation valves are provided on the control rod drive hydraulic system lines. These lines are isolated by means of the normally closed hydraulic system control valves located in the reactor building, and by means of check valves comprising a part of the drive mechanism.

5. Small diameter instrument lines are provided with one manually operated shut-off valve, operable from the reactor building.

Motive power for the valves on process lines which require two valves shall be physically independent sources to provide a high probability that no single accidental event could interrupt motive power to both closure devices.

Upon loss of motive power and when containment closure action of the valve is called for, the valve shall fail closed or shall fail in its existing position.

Valve actuation power failure shall be detected and annunciated.

Isolation valve closure time shall be such that for any design basis break the coolant loss is restricted to an amount less than that which would result in uncovering the core.

Valves, sensors, and other automatic devices essential to the isolation of the containment shall be provided with means to periodically test the functional performance of the equipment. Such tests would include demonstration of proper working conditions, correct set point of sensors, proper speed of responses, and operability of fail safe features.

3.5.2 Bases

(Same as Unit 2 PDAR as amended)

One of the basic purposes of the primary containment system is to provide a minimum of one protective barrier between the reactor core and the environmental surroundings subsequent to an accident involving failure of the piping components of the reactor primary system. To fulfill its role as an insurance barrier, the primary containment is designed to remain intact before, during and subsequent to any design basis accident of the process system installed either inside or outside the primary containment. The process system and the primary containment are considered as separate systems, but where process lines penetrate the containment, the penetration design achieves the same integrity as the primary containment structure itself. The process line isolation valves are designed to achieve the containment function inside the process lines when required.

Since a rupture of a large line penetrating the containment and connecting to the reactor coolant system may be postulated to take place at the containment boundary, the isolation valve for that line is required to be located within the containment. This inboard valve in each line is required to be closed automatically on various indications of reactor coolant loss. A certain degree of additional reliability is added if a second valve, located outboard of the containment and as close as practical to it, is included. This second valve also closes automatically if the inboard valve is normally open during reactor operation. If a failure involves one valve, the second valve is available to function as the containment barrier. By

physically separating the two valves there is less likelihood that a failure of one valve would cause a failure of the second. The two valves in series are provided with independent power sources.

The ability of the steam line penetration and the associated steam line isolation valves to fulfill the containment objectives under several single failure conditions of the steam line is shown below by consideration of various assumed steam line break locations as shown by Figure 48A.

1. The failure occurs within the drywell upstream of the inner isolation valve.

   Steam from the reactor is released into the drywell and the resulting sequence is similar to that of a loss of coolant accident except that the pressure transient is less severe since the blowdown rate is slower. Both isolation valves close upon receipt of the high drywell pressure signal or the signal indicating low water level in the reactor vessel. This action provides two barriers within the steam pipe passing through the penetration and prevents further flow of steam to the turbine. Thus when the two isolation valves close subsequent to this postulated failure, containment integrity is attained, and the reactor is effectively isolated from the external environment.

2. The failure occurs within the drywell and renders the inner isolation valve inoperable.

   Again the reactor steam will blow down into the primary containment. The outer isolation valve will close upon receipt of the high drywell pressure or low water level signal, and the reactor becomes isolated within the primary containment as above.

3. The failure occurs downstream of the inner isolation valve either within the drywell or within the guard pipe.

   Both isolation valves will close upon receipt of either a high drywell pressure signal or a signal indicating low water level in the reactor vessel. The guard pipe is designed to accommodate such a failure without damage to the drywell penetration bellows, and the design of the pipe line supports protect its welded juncture to the drywell vessel. Thus the reactor vessel is isolated within the primary containment by means of the inner isolation valve, and the primary containment integrity is maintained by closure of the outer isolation valve. It should be noted that this condition provides two barriers between the reactor core and the external environment.

4. The failure occurs outside the primary containment between the guard pipe and the outer isolation valve.

   The steam will blow directly into the pipe tunnel until the isolation valves are automatically closed. Closure of the inner isolation valve places a barrier between the reactor core and the external environment. This barrier serves to isolate the reactor and complete the containment integrity. Closure of the outer isolation valve in this incident serves no useful purpose.

5. The failure occurs outside the primary containment and renders the outer isolation valve inoperative.

   The containment barrier and isolation of the reactor is achieved by the inner isolation valve and penetration configuration integrity as in 4 above.

6. The failure occurs outside the primary containment between the outer isolation valve and the turbine.

The steam will blow down directly into the pipe tunnel or the turbine building until both isolation valves are automatically closed. This action isolates the reactor, completes the containment integrity, and places two barriers in series between the reactor core and the outside environment. The off-site consequences of failures 4, 5, and 6 are represented in the accident analysis as discussed in Section XI-3.3.

7. There is a simultaneous failure of the steam line and guard pipe at a location between the two isolation valves.

   The steam will blow down into both the pipe tunnel and the interior of the drywell. The isolation valves will close by any of the signals indicating high drywell pressure, low water level in the reactor vessel, or high temperature in the steam tunnel. The inner isolation valve provides the barrier in the steam pipe to the further escape of steam or radioactive materials from the reactor vessel.

   It should be noted also that the turbine stop valves, located in the steam lines just ahead of the turbine will provide a back-up containment barrier in addition to the other isolation valves, for such breaks as 1, 2, and 3 as discussed above.

The exceptions to the arrangement of isolation valves described above for lines connecting directly to the containment or reactor primary system are made only in the cases where it leads to a less desirable situation because of required operation or maintenance of the system in which the valves are located. In the cases where for example the two isolation valves are located outside the containment, special attention is given to assure that the piping to the isolation valves has an integrity at least equal to the containment.

The TIP system isolation valves are normally closed. When the TIP System cable is inserted the valve of the selected tube opens automatically and the chamber and cable are inserted. Insertion, calibration and retraction of the chamber and cable requires approximately five minutes. Retraction requires a maximum of 1-1/2 minutes. If closure of the valve is required during calibration, the isolation signal causes the cable to be retracted and the valve to close automatically on completion of cable withdrawal.

It is not necessary nor desirable that every isolation valve close simultaneously with a common isolation signal. For example, if a process pipe were to rupture in the drywell, it would be important to close all lines which are open to the drywell, and some effluent process lines such as the main steam lines. However, under these conditions, it is essential that containment and core cooling systems be operable. For this reason, specific signals are utilized for isolation of the various process and safeguards systems.

Isolation valves must be closed before significant amounts of fission products are released from the reactor core under design basis accident conditions. Because the amount of radioactive materials in the reactor coolant is small, a sufficient limitation of fission product release will be accomplished if the isolation valves are closed before the coolant drops below the top of the core.

Valves, sensors, and other automatic devices essential to the isolation of the containment are provided with means for periodically testing the functional performance of the equipment. Such tests are necessary to provide reasonable assurance that the containment isolation devices will perform as required when called upon to do so.

3.5.3 Description of Isolation Valve Systems

(Conforming amendment of Unit 2 PDAR required where indicated by ‡)

Table V-2 is a listing typical of the principal isolation valves to be used in the piping which penetrates the primary containment. The table indicates the number and service of the valves, location of the valves with respect to the primary containment, signal which actuates the valve, the motive power which actuates the valve, and the closure time of the valve. The valve locations and arrangements are also shown on Figure 66.

The following considerations have generally been applied in the design of the isolation valve systems:

a. Effluent lines such as main steam lines which connect to the reactor vessel or which are open to the primary containment have one ac powered motor operated valve located inside the primary containment, and one dc powered motor operated valve located outside the primary containment. Studies have shown this arrangement to have a high reliability with respect to functional performance. These valves are closed automatically by the signals indicated in Table V-2.

b. Influent lines such as the feedwater lines which connect to the reactor vessel or which open into the primary containment have one check valve inside the primary containment and an ac powered valve or a second check valve outside the primary containment. The ac operator is chosen for this application since the motor is simpler in construction, and is assessed as having overall higher reliability than a dc motor for the same service.

   The check valves close automatically by reverse flow through the pipe. The motor operated valve is closed by remote manual signal.

c. TIP system guide tubes are provided with an isolation valve which closes automatically upon receipt of proper signal and after the TIP cable and fission chamber have been retracted.
‡ In series with this isolation valve an additional, or back-up isolation valve is included. The
‡ function of this valve will be to assure integrity of the containment even in the unlikely event
‡ that the present isolation valve should fail to close or the chamber drive cable should fail to
‡ retract if it should be extended in the guide tube during the time that containment isolation is
‡ required. This valve will be designed to shear the cable and seal the guide tube, if necessary,
‡ upon an actuation signal. Valve position (full open or full closed) of the automatic closing
‡ valves will be indicated in the control room. Closing of the shear valves will be performed
‡ by operator action from the control room. Each shear valve will be operated independently.
‡ The valve is expected to be an explosive type valve, d-c operated, with monitoring of each
‡ actuating circuit provided.

   ‡ In the event of a containment isolation signal, the TIP System receives a command to retract
‡ the traveling probes for the several machines. Upon full retract the isolation valves are then
‡ closed automatically. If a traveling probe were jammed in the tube run such that it could not
‡ be retracted, this information would be supplied to the operator who would in turn investigate
‡ the situation to determine if the shear valve should be operated.

d. Lines such as the closed cooling water lines which neither connect to the reactor primary system nor are open into the primary containment are provided with at least one ac powered valve located outside the primary containment or a check valve on the influent line inside the containment.

e. Instrumentation piping connecting to the reactor primary system which leaves the primary containment is dead-ended at instruments located in the reactor building. There lines are provided with manual isolation valves.

f. The control rod hydraulic system is provided with two valves which are utilized for isolation purposes. The first is a ball check valve which comprises an internal portion of the control drive mechanism. A second valve is the normally closed hydraulic system control valve located in the control and equipment room in the reactor building.

g. Each motor operated valve is provided with limit switches which are used to indicate that the valves are either open or closed.

h. Each motor operated valve is capable of being actuated from the control room.

3.5.4 Surveillance and Testing

(Same as Unit 2 PDAR as amended)

a. The test capabilities which will be incorporated in the primary containment system to permit leak detection testing of containment isolation valves are separated into two categories.

The first category consists of those pipe lines which open into the containment and do not terminate in closed loops outside the containment, but contain two isolation valves in series. Test taps are provided between the two valves which permit leakage monitoring of the first valve when the containment is pressurized. The test tap can also be used to pressurize between the two valves to permit leakage testing of both valves simultaneously. The valves, associated sensors and equipment which will be subjected to containment pressures during the periodic leakage tests will be designed to withstand containment design pressure without failure or loss of functional performance. The functional performance of these devices will be verified by demonstration either during the leakage tests or subsequent to the test but prior to start-up.

The second category consists of those pipe lines which connect to the reactor system, also contain two isolation valves in series. A leak-off line is provided between the two valves, and a drain line is provided downstream of the outboard valve. This arrangement permits monitoring of leakage on the inboard and outboard valves during reactor system hydrostatic tests, which can be conducted at pressures up to the reactor system operating pressure of 1000 psig.

b. Isolation valve closing time will be determined during the functional performance test performed prior to reactor startup.

c. Leaks in the TIP drive room will be detected by the area monitor located there for that purpose.

3.6 Primary Containment Venting and Vacuum Relief

(Same as Unit 2 PDAR as amended)

3.6.1 Performance Objectives

The performance objective of the primary containment venting system is to provide pressure equalization between the pressure suppression system and the outside atmosphere during normal modes of operation. The venting system is also used to purge the drywell for personnel access. The performance objective of the vacuum relief system is to limit the negative pressure that the containment may be subjected to during normal operation or post-accident conditions within the design capability of the containment.

3.6.2 Bases

It is necessary that pressure be equalized between the containment and the outside atmosphere during normal plant operation in order to ensure that containment external design pressures are not exceeded. Therefore, the containment is periodically vented to eliminate pressure fluctuations caused by air temperature changes during various operating modes. This is accomplished through ventilation purge connections which are normally closed while the reactor is at a temperature greater than 212° F. The suppression chamber is vented separately.

The inerting system provides makeup nitrogen to the containment to compensate for containment atmosphere density changes or to replace nitrogen which could be lost due to leakage. Makeup is automatically supplied to the suppression chamber if the pressure drops below a slightly positive pressure design point. Drywell makeup gas is supplied from the suppression chamber through the suppression chamber-to-drywell vacuum breakers which are a part of the pressure suppression vent system.

Automatic vacuum relief devices are used to prevent the primary containment from exceeding the external design pressure. The drywell vacuum relief valves draw gas from the pressure suppression chamber and the pressure suppression chamber vacuum relief device draws air from the reactor building.

3.6.3 Description of Primary Containment Venting and Vacuum Relief

Lines are provided for venting the drywell and the free space of the suppression chamber. The vent lines on the drywell are used to vent during startup for pressure relief due to drywell gas temperature changes, to purge the drywell prior to entering for maintenance work, and to obtain gas samples from inside the drywell for analysis. Double isolation valves on the vent lines will be operated from the control room.

In addition to the negative containment pressure protection obtained with the inerting system (described in Section 3.7.3e), vacuum breakers are located on the suppression chamber to provide automatic relief of negative pressure in the primary containment volumes. These valves are set to operate as backup to the inerting system.

Two vacuum breakers in series will be used in each of at least two lines to atmosphere. One valve will be actuated by a differential pressure signal and be independent of electrical power. The second valve will be self-actuating. The combined pressure drop at rated flow through both valves shall not exceed the difference between suppression chamber design external pressure and maximum atmospheric pressure.

The atmosphere to suppression chamber vacuum breakers are sized on the basis of supplying sufficient air to limit the negative pressure level of the drywell and suppression chamber to their respective design value. The air flow rate is conservatively assumed to be that necessary to compensate for steam condensation which could occur during the post accident drywell cooling operation.

3.6.4 Testing and Surveillance

The isolation valves of the vent system will be capable of being tested in a manner as described in Section V-3.4.4.

3.7 Core and Containment Cooling Systems and Containment Inerting System

The primary containment encases numerous components which must continuously function during normal plant operation or which must preserve their material integrity during the lifetime of the station.

These systems include the following:

(1) Normal drywell cooling,

(2) Core spray cooling systems with core flooding capability,

(3) Containment spray cooling systems,

(4) Containment inerting system.

3.7.1 Performance Objectives

(Conforming amendment of Unit 2 PDAR required where indicated by ‡).

The main objective of the core and containment cooling systems is to remove heat from the reactor core and primary containment vessels over a wide range of conditions in order to (1) maintain indefinitely the functional performance of the containment system, and (2) lower the driving force for leakage of fission products from the primary containment in event of a severe accident.

The ambient temperature of the drywell shall be maintained at approximately 135° - 150° F during normal plant operation.

Core cooling is provided to prevent excessive overheating of the fuel following the posutlated loss-of-coolant accident. Excessive overheating of the fuel is defined as that magnitude and duration of fuel cladding high temperature which would allow the extent of the possible metal and water reaction to endanger the integrity of the containment system.

Containment cooling systems have capacity to remove fission product decay heat. The systems also serve to reduce the pressure inside the primary containment following a loss-of-coolant accident.

Two independent full capacity systems are provided for core cooling. Two independent full capacity
‡ systems are also provided for containment cooling, but one of these is utilized in common between
‡ Units 2 and 3. The systems are designed and constructed in such a way as to assure that they will not be rendered inoperative by the postulated accident circumstances.

Operation of these systems, either accidental, test or required, shall not impair the safety of the plant. For example, thermal shock from injection of core spray water into the reactor vessel shall not cause excessive stresses.

On the core cooling system, where fast starting is required, the initiation of system operation from appropriate signals is completely automatic. Adequate and reliable auxiliary electrical power sources will be provided not only to the equipment directly in these systems, but also to the closed cooling water system and service water system through which the heat is ultimately rejected.

Adequate water supplies will be assured.

To obviate jeopardizing the integrity at the containment, primary containment inerting is provided to prevent the burning of any hydrogen resulting from the loss-of-coolant accident.

Means are provided to test the systems before initial operation and at periodic intervals during the life of the plant. The latter may be tests of parts of the system; however, it must be adequate to assure operability when required.

3.7.2 Bases

(Conforming amendment of Unit 2 PDAR required where indicated by ‡)

During normal plant operation maintaining the drywell ambient temperature in the range of 135-150° F assures that the insulation on motors, isolation valves, operators and sensors, instrument cable, electrical cable and the gasket materials for sealants used at the penetrations will have a sustained life without deterioration.

Two redundant core cooling systems and the core flooding capability are provided to maintain core cooling to remove decay heat following the blowdown during the postulated loss of coolant accident. The maintenance of core cooling following the postulated accident removes the potential for hazard to the public or further damage to the power plant.

A concept of continuity of cooling is emphasized in the reactor design to assure containment integrity following a postulated loss-of-coolant accident. If a loss-of-coolant accident were to occur, it has been calculated that the reactor blowdown would require approximately 30 seconds, during which time heat is being removed from the fuel by the water leaving the vessel. Tests have shown that adequate cooling capabilities can be provided to maintain continuity of core cooling during and after the latter stages of the blowdown by a core spray system which sprays water in a predetermined pattern over the fuel.

Additional assurance that continuity of core cooling is maintained is provided by the core flooding capability which results from the jet pump and shroud design which provides an inner vessel around the reactor core. Each of the core spray systems has sufficient capacity to fill the inner vessel at a rapid rate for immersion of the fuel assemblies. Subsequent to the restoration of water level in the inner vessel continuance of core cooling is reduced to the relatively minor problem of keeping the inner vessel filled using water from either one or both of the core spray systems, the reactor feedwater system, or the control rod drive feed system. Tests have been conducted on electrically heated "fuel" elements to determine the depth of immersion required to provide adequate cooling. The tests were run using a twelve foot long 36 rod bundle. The power input was programmed as a function of time to correspond to the decay heat curve. The test results indicated that adequate cooling could be obtained with the "core" one third covered. The exposed portion of the rod showed peak temperatures of 1000° F to 1200° F. Exposed rod cooling is facilitated by the generation of steam in the immersed region of the bundle. In the actual reactor core the generation of steam by the lower portion of the immersed rods will be greater than the test value because of the flux skewing effect of core voids during normal operation.

Two additional full capacity containment spray cooling systems are provided to remove heat from the primary containment system. This cooling is provided for two reasons, i.e. (1) to provide capability to remove heat continuously from the primary containment following the accident to assure that the containment system does not become overpressurized and fail, and (2) to reduce rapidly the pressure of the primary containment in order to reduce leakage rate from the containment.

The capability of the primary containment system to withstand metal-water reactions is shown in the curve in Figure 78. Because the pressure at any time is also dependent on the temperatures which exist in the drywell and suppression chamber and the latter depend on the rate of energy removed and added, the containment pressure is a function of the metal water reaction rate. Although the core cooling systems are assumed not to function in order to provide a basis for metal-water reactions, one of the two containment cooling systems is assumed to function normally. This includes the drywell spray system with its associated cooling system.

Immediately following the major pipe rupture, the temperature of the suppression chamber water approaches 130°F and the maximum system pressure approaches about 39 psig during the blowdown of the primary coolant into the drywell. Most of the noncondensible gases will be transported in the suppression chamber but soon after initiation of the drywell spray, they will be redistributed between the drywell and suppression chamber volumes. The drywell spray is sufficient to transport the decay heat, the core stored heat, and any heat resulting from the metal-water reaction to the wetwell in the form of hot liquid. Steam flow will be negligible.

The energy transported to the suppression chamber water is removed from the containment system by containment cooling heat exchangers. The pressure level of the system depends on both the system temperatures and the amount of noncondensible gases. Thus the capability of the system to house resulting gases from the metal-water reaction varies with the rate and extent of the metal-water reaction. To evaluate this capability, various percentages of metal-water reaction were assumed to take place over various durations of time. The hydrogen and energy associated with a given extent of reaction was released from the vessel uniformly for the entire duration of the event. For a given extent of metal-water reaction the energy released from the vessel consisted of all the sensible heat stored in the clad and fuel of the core, all of the energy associated with the specified extent of metal-water reaction, and all of the energy associated with the reactor core decay heat for the duration of the sensible and metal-water heat release.

Iterative calculations were then performed to determine that percentage of metal-water reaction which resulted in 62 psig (system design pressure) for various durations of energy release. These results are plotted in Figure 78. It is shown in Section XI-3 that the metal-water reaction which could result from a complete core melt down is about 27.5%. This could be expected to occur in a minimum time of 30 minutes and this lies within the system capability.

If it is assumed that a rapid but nondetonating burn occurs subsequent to the release of hydrogen, about 4% of the total zirconium in the core can be reacted before the hydrogen concentration is such that the integrity of the containment (at a design pressure of 62 psig) is jeopardized. Complete dispersal of the hydrogen within the drywell and suppression chamber is assumed. It is unlikely that burning of the hydrogen will occur as it is released, because of the lack of oxygen within the reactor vessel, the lack of continuous ignition source in the drywell, and the lack of sufficient hydrogen temperature level upon entering the drywell.

All the gases are assumed to follow the perfect gas laws, and 100% relative humidity is assumed to exist. Both of these assumptions are realistic and should closely represent the true case. The entire system is assumed to be insulated from any external heat sources or sinks. Because the burning takes place rapidly, i.e., in less than 10 seconds, this is a realistic but conservative assumption. The final pressure after combustion products and the temperature obtained from a heat balance on the energy released.

Radiant losses during the burn period are appreciable (30% because of the high temperatures in the flame front). The losses occur by radiation to the surfaces of containment. The latter represent a sizable sink even though only 2% of the thickness was calculated as being an effective heat sink. The time required to burn was based on a flame propagation velocity of 10 fps, determined by hydrogen air experiments in the literature, and the geometry of the containment. The flame was assumed to travel in two directions. The radiant heat losses were corrected for absorption by water vapor and air. The calculations are performed by an iterative procedure to yield the final temperature, immediately after combustion, of about 1200°F.

For the case of 4% metal-water reaction the resulting preburn hydrogen concentration within the containment is approximately 12%. All of this hydrogen was assumed to burn. There is sufficient oxygen concentration to achieve complete burning for this amount of hydrogen. This amount of burning and associated energy release would result in a primary containment pressure level of 62 psig —the design rating of the containment.

In summary then, the proposed containment is capable of handling appreciable metal-water reactions for various durations of the gas and energy release. These extents of reaction are in excess of those expected based on all calculations conducted. Since the capability of the containment to withstand the burning hydrogen resulting from a metal-water reaction is limited — approximately 4% metal-water re-reaction — provisions have been made for an inert atmosphere in the primary containment at all times when primary containment availability is required. From the data [1] it is concluded that the possibility of a hydrogen-oxygen reaction can be eliminated for all concentrations of hydrogen present, if the concentration of oxygen in the primary containment is less than 5%.

In the analysis of the postulated loss of coolant accident (Section XI-3) it has been shown that the operation of either core spray system will maintain continuity of core cooling such that the extent of the resultant metal-water reaction would be only approximately 0.5%. The hydrogen if mixed with the air in the primary containment would result in a hydrogen concentration of approximately 2.5%. This concentration is significantly below the concentration at which hydrogen could be ignited. However, to obviate the possibility of an energy release within the primary containment from a hydrogen-oxygen reaction under conditions more severe than can currently be foreseen, the design includes a system to reduce the oxygen concentration of the atmosphere within the primary containment.

3.7.3 Description of Core and Containment Cooling Systems and Containment Inerting System

Means are provided for heat removal from the primary containment during normal operation and under the postulated accident conditions. The basic purpose of the normal drywell cooling system is to maintain ambient temperatures within the drywell sufficiently low so that electrical equipment and penetration seals will not be impaired through long-term thermal degradation.

The basic function of standby cooling systems, which are used only under specific accident conditions and are not in service during normal operation of the station, is to provide alternate, independent means of removing fission product decay heat in the event of a loss-of-coolant accident. The following systems are provided to accomplish this function: (1) two independent core spray cooling systems; (2) two separate containment spray and heat removal systems. For these systems, prime consideration has been given to continuity of core cooling during and following the accident, and to rapid reduction of pressure within the primary containment. Arrangement of certain components within the reactor pressure vessel provides core flooding capability during the accident.

Means of preventing the burning of any hydrogen released in the event of a loss-of-coolant accident are provided by the containment inerting system.

---

(1) Wm B. Cottrell and A. W. Savolainen, U.S. Reactor Containment Technology, Vol. 1, ORNL-NSIC-5, pg. 583, Fig. 5.43a, Limits of Flammability of Hydrogen in Air and Carbon Dioxide or Nitrogen; and Fig. 5.43b, Flammability Limits of Hydrogen-Air Steam Mixtures.

a. Normal Drywell Cooling

(Same as Unit 2 PDAR as amended).

The drywell is cooled during normal operation of the Unit by a closed loop ventilation system designed to hold the ambient temperature in the drywell to approximately 135 °F. The containment atmosphere is circulated through the drywell and the coolers by fans, and closed loop cooling water from the reactor building is employed to remove heat from the coolers. A separate fan located outside the drywell will be used to purge the drywell prior to entering this area for maintenance work.

b. Core Spray Cooling Systems

(Conforming amendement Unit 2 PDAR required where indicated by ‡) ‡

The core spray system is designed to pump water directly from the suppression chamber into the reactor vessel. The two full capacity systems each have a design capacity of about 4550 ‡
gpm at 160 psig discharge pressure. The piping system is fabricated of carbon steel from the ‡
suppression chamber to the outer isolation valve. Safety valves are utilized for pressure protection of this section of the system. From the outer isolation valve into the reactor the system is fabricated of stainless steel having a design pressure of 1,250 psig.

A separate ring header for each of the two systems is located inside the reactor vessel directly above the core and sprays water directly onto the fuel bundles in a pre-established pattern. A strainer is placed ahead of the core spray pump suction to screen out particulates which could interfere with a discharge of water from the nozzles.

Upon receipt of the actuating signal, one pump is started automatically and the isolation valve opens. When the reactor pressure drops to arrpximately 160 psig the check valve opens and ‡
water is sprayed onto the top of the fuel assemblies. Water flows down the fuel rods to effect the cooling as described in the loss-of-coolant accident in Section XI. Water which reaches the bottom of the fuel drains into the lower portion of the inner vessel.

This system is also designed so that if one pump fails to start, the other pump is automatically switched into operation. Both the pumps and the valve may be actuated from the control room. The electrical loads associated with these systems are considered in the standby diesel generator size.

With either one of the two core sprays in operation, the core is cooled adequately so that any hydrogen resulting from partial metal-water reactions is below the flammability limit by an ample margin (a factor of 5 to 10) so that inerting would not be required. The specification of this flow rate is based on refined prototype testing of a full scale fuel bundle under actual power conditions and actual spray distribution conditions. In order to insure that the test situations resulted in a limiting case, the test fuel rods were allowed to overheat (1250 °F) prior to core spray activation and the channel boxes were allowed to stay at high temperature. The spray systems have been sized to provide the maximum required flow rate to each fuel bundle in the core. Flow distribution in the upper plenum as well as leakage flow now available to fuel rods were also taken into account in establishing the flow requirements.

c. Core Flooding Capability

(Same as Unit 2 PDAR as amended).

Those components (refer to Figure 12) within the reactor pressure vessel essential in providing a core reflooding capability are:

(1) The shroud
(2) Reactor vessel bottom head
(3) The jet pump diffuser and throat (refer to Figure 30)
(4) The core spray spargers and piping.

The shroud, reactor vessel bottom head and jet pump diffuser and throat sections form the vessel within the reactor vessel which may be reflooded. Either of the two spray spargers mounted on the inside of the shroud and the separate piping manifolds which deliver water to the spray spargers constitute the means for introducing water inside this vessel for reflooding.

The lower portion of the shroud is furnished integral with the reactor vessel and has a diameter of approximately 196 inches. This portion of the shroud consists of the bottom course of the cylindrical shroud with the bottom end at approximately the 9 foot vessel elevation, a horizontal baffle plate between the shroud bottom course and the top of the vessel bottom head at approximately the 10 foot vessel elevation, and several vertical support legs. The support legs are approximately 4-1/2 feet in length and extend from the bottom shroud course to the vessel bottom head. The baffle plate and legs are full penetration welded to both the reactor pressure vessel bottom head and the bottom course of the shroud.

The lower portion of the shroud is designed to accommodate the differential expansion of the ferritic reactor vessel and the austenitic stainless steel upper portion of the shroud and the jet pump diffuser. This lower part of the shroud, including the baffle plate and the support legs is fabricated either of carbon steel clad on both sides with stainless steel or of solid Inconel, probably the latter. The support legs carry almost all of the vertical loads carried through the shroud including the weight of the shroud and the other structural components which mount on it, the pressure loading on the shroud both under normal operating conditions and accident conditions, and the vertical loads developed to resist the vertical component of earthquake induced loads and the overturning moment of the horizontal component of earthquake induced loads.

The upper portion of the shroud is cylindrical and is joined to the bottom course of the shroud with a full penetration weld. All of these elements are fabricated of austenitic stainless steel. The principal stresses produced in the shroud are due to the pressure loading and the differential expansion of the shroud upper part and the shroud lower part. Loading due to weight of components supported on the shroud and earthquake loading are also taken into account.

The jet pump diffuser is a gradual conical section terminating in a straight cylindrical section at the lower end which is welded into the baffle plate. The throat section is a tube with integral contoured inlet section and the upper part of the conical diffuser. The joint between the throat and the diffuser is a slip fit at approximately the 18-foot elevation of the vessel. The upper end of the diffuser section and the throat are braced from the reactor vessel through the riser pipe between each pair of jet pumps. The throat is held down in the slip fit socket in the top of the diffuser by a bolted connection at the top of the riser pipe.

The design of the jet pump parts take into account the pressure loading both in normal and accident conditions and the reactions at the supporting brackets due to differential thermal expansion of the pump and reactor vessel.

The shroud, vessel bottom head and jet pump diffusers and throats form a vessel within the reactor vessel having a volume of approximately 6000 cu ft with 4000 cu ft below the core which can be reflooded to the height of the top of the jet pump throats, which are located at approximately the 26-foot elevation of the vessel. Water admitted through either of the two core spray spargers will fill this vessel to the point of overflowing the jet pump throats. The top of the jet pump throats will be at approximately two-thirds of the core height (about one-third of the active fuel zone will be above the tops of the jet pump throats). A finite leakage will occur through the slip fit of the jet pump throat in the top of the diffuser. The additional core spray flow will flow over the tops of the jet pumps. After flooding, any system which is available to put water in the reactor vessel will provide adequate cooling, e.g. either core spray system, the reactor feed system, the control rod drive feed system, or possibly the reactor cleanup system.

d. Containment Spray Cooling System

(Conforming amendment of Unit 2 PDAR required where indicated by ‡)

The containment spray cooling system consists of two independent loops each provided with
‡ three half-capacity pumps (one a spare), a heat exchanger rejecting heat to the containment
‡ cooling service water system, and a containment spray system. One of the loops is shared
‡ with Unit 2 as shown in Figure 35. The shared loop is on standby and would start automatically
‡ if the independent Unit 3 loop failed to start on demand. However, both systems can be operated
‡ simultaneously. Automatic start is initiated by the occurrence of both the drywell high pressure
‡ signal and the low reactor water level signal.

Although the sizings for both the spray rates and the heat exchange capacities will not be finally specified until the completion of the system optimization study, current performance predictions are based on each cooling loop having a spray rate of 7000 gpm and 102 million Btu/hr heat removal capacity for a primary side inlet temperature of 165° F.

Water is pumped from the suppression chamber through the heat exchanger and then into the containment. The water is sprayed into the containment for heat removal and flows by gravity back into the suppression chamber. Some bypass flow directly from the heat exchanger discharge line to the suppression chamber air space will be provided for test purposes.

The electrical loads associated with these systems are considered in the standby diesel generator size.

e. Containment Inerting System

(Conforming amendment of Unit 2 PDAR required where indicated by ‡)

‡ The primary containment inerting system will introduce a nitrogen atmosphere into the primary
‡ containment, as shown in Figure 73. The system will be capable of reducing, and maintaining,
‡ the oxygen content of the atmosphere to a level not to exceed 5% by volume. The system and its
‡ operational procedures shall comply with the requirements set forth by the American Gas
‡ Association.

‡ Gases, purged from the primary containment, will be vented to the reactor building ventilation exhaust. A safety valve shall be provided in the nitrogen supply system to prevent over-pressurization of the containment. The containment ventilation blowers shall be utilized during the purging operation to maximize mixing of the nitrogen and oxygen.

‡ Basically, the equipment in the primary containment inerting system performs two (2) functions. They are initial purging of the primary containment, and providing an automatic supply of make-up gas. The purging equipment converts liquid nitrogen into gaseous nitrogen. Gaseous nitrogen is then pumped into the suppression chamber where it will mix with the air. The resulting gaseous mixture will then be forced into the drywell through the drywell to suppression chamber vacuum breakers. High capacity drywell ventilation fans will speed the diffusion process.

‡ The inerting system will also be capable of automatically providing make-up gas to the primary containment. Make-up gas will be required due to temperature changes and leakage. Automatic control shall be maintained using gas concentration controllers. The controllers shall automatically open and close the appropriate nitrogen supply valves. Appropriate pressure instrumentation shall be interlocked with the automatic controllers to prevent over-pressurization of the containment. Nitrogen or oxygen concentration read-out and alarm instruments shall be provided in the control room to assure proper nitrogen content of the primary containment atmosphere.

3.7.4 Surveillance and Testing

(Conforming amendment of Unit 2 PDAR required where indicated by ‡)

As noted in Figure 35, specific provisions are made for testing the operability and performance of the several components of the core and containment cooling systems. The following are capable of being tested periodically:

a. The flow rate in the core spray system

b. The flow rate in the containment cooling systems

In each of the above, each pump of each system can be started individually and water pumped from the suppression chamber, through the appropriate supply lines to the outer isolation valve then returned to the suppression chamber.

c. All motor operated valves can be exercised and their operability demonstrated.

d. Nozzles of the ring header of the containment cooling system can be tested by blowing air into the supply header and inspecting individual nozzles.

e. Level of water in the suppression chamber will be continuously indicated in the control room.

f. Safety valves on the low pressure carbon steel lines of the core spray system can be removed and tested for set point.

With reference to testing of core flooding capability the pre-operational testing of the core spray system will demonstrate the ability of the system to fill the shroud up to the height of the top of the jet pumps. Timing the rate at which the level drops after the core spray flow is shut off will verify the leakage through the slip joint between the jet pump throat and diffuser. Subsequent to the pre-operational

tests it is anticipated that no special testing of this feature will be performed. Analyses indicate that any potential leakage past the slip fit joint of the jet pump diffuser section would be a very small fraction of the total capacity of the core spray system, and that such leakage would have no effect on reflooding capability.

It is estimated that the pressure differentials across the reactor internals essential to core reflooding are not substantially different than those which will exist during normal operation. Therefore, the pre-operational test of the recirculation system will virtually test the components to their design loading.

‡ With reference to containment inerting instrumentation is provided in the design with which it will be
‡ possible to analyze the concentration of oxygen in the primary containment. The oxygen concentration will
‡ be continuously monitored.

4.0 SECONDARY CONTAINMENT SYSTEM

(Conforming amendment of Unit 2 PDAR required where indicated by ‡)

‡ A single reactor building completely encloses both the Unit 2 and Unit 3 reactors and pressure sup-
‡ pression primary containments. This structure provides secondary containment when the primary containment is in service, and the primary containment during periods when the primary containment is open.
‡ The reactor building houses the Unit 2 and 3 refueling and reactor servicing equipment, new and spent fuel storage facilities, and other reactor auxiliary or service equipment, including the isolation condenser systems, demineralizers, standby liquid control systems, control rod hydraulic system equipment, and components of electrical equipment. From a safeguards consideration, the primary purpose of the secondary containment is to minimize ground level release of airborne radioactive materials, and to provide for controlled, elevated release of the building atmosphere under accident conditions.

4.1 Reactor Building

4.1.1 Reactor Building Performance Objectives

The reactor building is designed to provide containment during reactor refueling and maintenance operations when the primary containment system is open. The building will also provide secondary con-
‡ tainment when the primary containment is required to be in service. The building is required to meet
‡ any combination of the above as may be required by the operation of Units 2 and 3.

The reactor building is designed so that its inleakage rate is not greater than 100 percent of the building volume per day under neutral wind conditions when the building is subjected to an internal negative pressure of 0.25 inch of water.

Exfiltration from the building does not exceed 100 percent of the building volume per day for wind speeds on the order of 40 miles per hour.

The building is capable of withstanding an external wind loading equivalent to a wind velocity of about 110 miles per hour.

The aseismic design of the building is in accordance with Section V-6.

The building is designed to withstand an internal pressure of seven inches of water without structural failure and without pressure relief. Provisions are made to relieve reactor building pressure in excess of the design pressure in the unlikely event of a rupture of the primary piping within the building. Relief devices are provided to assure that building structural integrity will not be impaired.

‡ Means are provided for exhausting treated air from the reactor building to the 310 ft stack.

Means are provided for periodically monitoring the leak tightness of the reactor building.

In addition to the above, the reactor building structure is designed and constructed in accordance with applicable state and local building code requirements.

4.1.2 Bases for the Reactor Building Performance Objectives

The primary containment system provides the principal mechanism for mitigation of accident consequences. However, safety analyses indicate that if the reactor building effluent air is treated and ‡ controlled to a low rate, and discharged through the stack for elevated release, the off-site dose under postulated accidents can be significantly reduced even further. Thus, the reactor building is designed in accordance with applicable codes to withstand severe natural phenomena and to minimize ground level release of the building contents under adverse conditions.

High winds will create pressure gradients around the building which can cause outleakage or exfiltration from the building. Calculations have been made of exfiltration in high winds based on building pressure gradients determined by Irminger and Nøkkentved[1] in wind tunnel tests of building models. Data for seven different wind directions were used in the calculations, from which it was determined that the greatest exfiltration rates arise from those associated with the wind blowing normal to the longest ‡ side of the reactor building, which measures approximately 300' x 118'. The models used for the tests in the above reference were similar in geometry to the reactor building except that the length-to-width ‡ ration was somewhat less, 2:1 as compared to about 2.5:1 for the reactor building.

Leakage rate tests of buildings at low pressure differentials indicate that leakage rates may be correlated by the following equation[2]:

$$\text{Leakage rate} = a(\Delta P) + b(\Delta P)^{1/2}$$

where "a' and "b" are constants which are dependent upon the leakage characteristics of the building and ΔP is the pressure differential between the building atmosphere and the outside. To determine the potential range of exfiltration rates, two series of calculations were made - one assuming leakage rates to be proportional to ΔP to determine maximum exfiltration rates and the second proportional to $(\Delta P)^{1/2}$ to determine minimum rates. Other basic assumptions include the following:

1. Throughout all ranges of wind velocities, the standby gas treatment system discharges at a rate equivalent to 100 percent of the building volume per day.

2. The building inleakage rate is 100 percent of building volume per day when the building is maintained at a negative pressure of 0.25 inch of water with respect to the outside under zero wind velocity conditions.

3. Leakage sources are assumed to be distributed homogeneously on all four side walls of the building in proportion to wall length. The roof is assumed not to leak.

Maximum and minimum calculated reactor building exfiltration rates as a function of wind velocity are shown in Figure 20. These data indicate that at wind velocities less than about 35 mph, there would be

1. Irminger, J. O. and Nøkkentved, Chr., "Wind Pressures on Building, Second Series," Copenhagen, 1936 (available from U. S. Weather Bureau, Washington, D. C.).

2. Koonty, R. L., Nelson, C. T. and Baurmash, L., "Leakage Characteristics of Conventional Building Components for Reactor Housing Construction, "Transactions of the American Nuclear Society, Vol. 4, No, 2, P. 365, November 1961.

little, if any, exfiltration from the reactor building. These results also indicate that the maximum exfiltration rate at 40 mph is less than 20% of building volume per day as compared to the 100% per day as specified in Section V-4.1.1. The calculations which were made also indicate that exfiltration rates are almost directly proportional to the initial inleakage rate for a given negative building pressure. That is, if the building when tested were found to have an inleakage rate of 200% per day at zero wind velocity, it might be expected to have a maximum exfiltration rate of 40% per day under 40 mph wind conditions.

The maximum wind speed at the Dresden Site is in the range of 45-50 mph, at 150 feet elevation. A high wind of this magnitude would create an exfiltration rate up to approximately 50 percent per day. The actual rate would depend upon the building leakage characteristics, i.e., whether leakage is proportional to ΔP or $\Delta P^{1/2}$ for the final design. This is indicated by the expected leakage rate range in Figure 80.

The reactor building leakage rate specifications and controlled release ventilation rate will provide a more than adequate containment system for secondary containment during reactor operation and primary containment during refueling operations. Under high wind velocity exfiltration conditions, the dilution of any released material potentially reaching any off-site location is greater than that for stack release under normal wind conditions. Although a potential for increased off-site dose rates to the thyroid and lungs exists under conditions of exfiltration, because of the bypassing of the standby gas treatment system filters the dose rates under these conditions for all of the accidents described in Section XI are far below the dose rates generally considered acceptable in unlikely accident situations such as these. Further, on the basis of wind velocity data given in Exhibit III-6-40 of the Dresden Unit 2 PDAR, it is unlikely that high wind exfiltration conditions would exist for more than a few hours per year.

The reactor building is not specifically designed to contain pressures resulting from major pipe line breaks within the building. The use of flow restrictors in the steam lines and the ability to close rapidly the isolation valves limit the amount of energy and the quantity of radioactive material released.

The basis for the structural design of the building is stated in Section V-6.

4.1.3 Description of the Reactor Building

‡ Unit 2 and Unit 3 are designed to use the same reactor building. The structural design features of
‡ the building are shown in Figures 3 through 10. The reactor building is constructed to provide a single
‡ operating floor without separation barriers above this level. Beneath the operating floor the reactor
‡ building is provided with a common wall separating Unit 3 operating and equipment areas from those of
‡ Unit 2. Passageways are provided between the lower level areas of Unit 2 and those of Unit 3.

The building substructures, including the common wall, consist of poured-in-place reinforced concrete exterior walls up to the refueling floor. Above this floor level the structure is steel frame with insulated metal siding. The siding is installed with sealed joints. Entrance to the building is through interlocked double doors.

The building is founded on rock formation. See Volume III-Section 2 of the Dresden Unit 2 PDAR for data relating to load-bearing characteristics of the underlying rock formation.

4.1.4 Surveillance and Testing

The reactor building leakage rate can be tested by complete isolation of the building except for the effluent from the standby gas treatment system. The standby gas treatment system is placed into operation and the flow control valve adjusted to obtain 0.25 inch of water negative building pressure relative to atmosphere. The rate at which air is exhausted through the system is a measure of building in-leakage and will be directly measured by a system flow indicator.

4.2 Penetrations of the Reactor Building

4.2.1 Performance Objectives

The openings into the reactor building, including personnel and equipment access openings, and piping or ducts which penetrate the reactor building, are designed to provide containment which is as effective as the reactor building and which is consistent with the reactor building leakage rates specified in Section V-4.1.1.

Double interlocked doors are provided for access to the reactor building for both personnel and equipment. Sealed penetrations will be provided for cooling water, radwaste, electrical, vents and other services. Expansion joints will be installed where necessary to accommodate pipe movements.

Inlet and outlet ventilation ducts are sealed at the building perimeter and are provided with automatic closing double isolation valves.

4.2.2 Bases

The reactor building piping, duct, and electrical penetrations are designed to withstand the normal environmental conditions which may prevail during plant operation, and to retain their integrity during and following postulated accidents.

Double interlocked doors on equipment and personnel access locks provide a means for assuring that building access will not prevent the ability to maintain containment integrity.

The building ventilation ducts represent large openings in the building, and are closed automatically in order to achieve building isolation and containment.

Possible deterioration of seals on the air lock doors and penetrations will be detected and remedied through periodic inspections and tests.

4.2.3 Description of Reactor Building Penetrations

‡ As noted in Figure 7, the reactor building has four access openings, three for personnel and equipment and one for the railroad entry. Two of the personnel access openings are located in the Unit 2 area of the building and the other in the Unit 3 area. The smaller airlock doors are provided with mechanically interlocked doors with weather strip type seals. The railroad entry consists of a pair of doors equipped with compressible seals and air cylinders for opening and closing.

The penetrations for piping and ducts are designed to be consistent with the leakage requirements for the building. The electrical cables and instrument leads will pass through ducts which will be sealed into the building wall, and the cables are sealed with soft rubber gaskets or other soft sealing materials.

The ventilation duct isolation valves will close automatically upon a signal of high radiation levels in the reactor building or high pressure in the drywell. The valves are also manually operated from the control room.

4.2.4 Surveillance and Testing

The penetrations are capable of being inspected visually. Leakage of penetrations are determined in conjunction with the integrated leakage testing of the reactor building as described in Section V-4.1.4.

4.3 Ventilation and Standby Gas Treatment System

The reactor building is provided with two systems of ventilation. During normal power operation, shutdown, or refueling, the normal ventilation system provides fresh, filtered air to all levels and equipment rooms of the reactor building. During shutdown and refueling, the normal capacity is increased if necessary to provide additional ventilation to the fuel handling and drywell areas. Heating and cooling units are installed within the ventilation system to maintain temperatures for personnel comfort and equipment protection.

The standby gas treatment system is utilized to treat and exhaust the atmosphere of the reactor
‡ building to the 310 feet stack of Units 2 and 3 during containment isolation conditions with a minimum release of radioactive material from the containments to the environs. Provisions are also made to direct the drywell purge air or to vent the primary suppression chamber through the gas treatment system, if desired.

Either the normal or standby systems may be utilized to maintain the reactor building at a negative pressure with respect to atmospheric pressure to prevent ground level release of gases. Under containment isolation conditions only the standby gas treatment system operates.

4.3.1 Performance Objectives

The normal ventilation system shall have the capacity to provide a minimum of one air change per hour of filtered air to all portions of the containment requiring ventilation. Normal reactor building ventilation is exhausted from a reactor building vent.

Both the inlet and outlet ventilation ducts of the reactor building are provided with two isolation valves in series which are closed automatically when high radiation levels in the reactor building are detected. Provisions are made for testing the isolation performance of these valves.

The standby gas treatment system is capable of attenuating fission products to the extent that the gaseous exhausts resulting from the design basis accident are discharged for elevated release from the
‡ 310 foot stack. The resulting off-site radiation doses will be substantially less than the reference value in 10 CFR 100.

To prevent ground level leakage of fission products from the reactor building, subsequent to design basis accidents, the system shall have the capability of maintaining a negative pressure of 0.25 inch of

water within the reactor building with respect to the outside atmosphere under neutral wind conditions. Under these conditions, the reactor building in-leakage is processed through the standby gas treatment system before being discharged through the 310 foot stack.

The standby gas treatment system is designed to be utilized in testing the leak-tightness of the reactor building.

Heat generated by fission products which may become accumulated in the components of the standby gas treatment system is dissipated to the extent necessary to maintain functional performance of the system under design basis accident conditions.

Provision is made for testing the performance capabilities of the standby gas treatment system.

The standby gas treatment system is designed to be placed into service automatically.

4.3.2 Bases

The standby gas treatment system, together with the low leakage rate of the reactor building, substantially reduces the consequent off-site dose which might arise from postulated accidents. This is accomplished by:

a. placing the reactor building under negative pressure and thus preventing ground level release of the building atmosphere;

b. filtering the reactor building air exhaust for the removal of radioactive particulates and halogens; and

c. providing for controlled elevated release of the treated building exhausts to achieve atmosperhic dispersion.

In addition to its functional performance of mitigating accident consequences, the standby gas treatment system provides a method for testing the gross leakage of the reactor building.

4.3.3 Description of the Ventilation and Standby Gas Treatment Systems

a. Normal Ventilation Design Features

The normal ventilation system provides a minimum of one air change per hour of filtered air to all levels and equipment rooms of the reactor building. During shutdown and refueling, ventilation of the fuel handling and drywell areas are also provided from the normal ventilation system. Ventilation is supplied to the reactor building through a system of ducts, fans, and filters. The ducts are arranged so as to supply filtered ventilation air to both of the Unit 2 and Unit 3 portions of the building.

The general air flow pattern is from the filtered supply to uncontaminated areas, to potentially contaminated areas, and thence, to the exhaust vent. Above the operating floor some small amount of mixing of the air from the two supply duct systems will occur. Below the operating floor the air flow paths

‡ will be separate with negligible interchange of air between the Unit 2 areas and those of Unit 3. The ex-
‡ haust both above and below the operating floor for Unit 2 and Unit 3 is separately ducted to a common
‡ exhaust fan system (Figure 36). The reactor building normal ventilation is ducted to the exhaust vent through which it is released to the atmosphere. The air is not filtered before being exhausted.

Two isolation valves in series are provided in the reactor building on both the inlet and outlet ducts which will be closed automatically when high radiation levels in the reactor building are detected. In order to prevent building damage, the inlet valves may be opened automatically to prevent excessive negative pressure within the building.

Provisions are made for heating and cooling the inlet ventilation air.

b. Standby Gas Treatment System

Basically, the system consists of inlet duct work taking suction from the normal building ventilation discharge before the isolation valves, a dual bank of filters for removal of particulates and halogens, a
‡ blower in each filter duct, isolation valves on each side of the filter unit, exhaust duct work to the 310 foot stack, and a radiation monitor system installed in the exhaust duct. The normal post-accident operating procedure is to take suction from the reactor building as described above. However, the system is also capable of taking suction from the suppression chamber air volume or the drywell air volume if necessary to facilitate post-accident recovery. A diagram of the system is shown in Figure 36.

The filter consists of two separate filter units, each having approximately 4,000 cfm capacity. Either of the two filter units is considered as an installed spare, with the remaining one capable of the required flow capacity. The filter units are mounted in individual ducts and provided with isolation valves on the inlet and outlet of each filter unit. The filter units may have a common inlet header or plenum and a common outlet header.

The design of the ducts and equipment, such as valves and their operators, etc., prevents introduction of foreign materials, such as lubricants, into the air stream and filters which could detrimentally affect the filter efficiency.

Normal cooling of the filters is done by the air flowing through them. In addition, the filters and filter housings are designed to dissipate decay heat from possible fission products retained on the filters, with no forced air flow and without filter damage, in the following amounts:

1. Iodines - 200 watts thermal per filter for charcoal filters, plus

2. Particulates - 200 watts thermal per filter for upstream high efficiency filters (this includes a fraction of iodines held as particulate matter).

Each filter unit includes the following - in the sequence of treatment:

1. A moisture de-entrainment device.

2. High efficiency particulate filter, water resistant, capable of removing 99.5 percent minimum of particulate matter which is 0.3 micron or larger in size. Filter design shall be fire

resistant, as may be required from consideration of the heat generation from postulated deposit of fission products.

3. Iodine filter, such as an activated carbon bed, following the upstream particulate filter, capable of removing 99.9 percent minimum of iodines. Filter design shall be fire resistant as may be required from consideration of the heat generation.

4. A second redundant high efficiency particulate filter, following the iodine filter, capable of removing 99.5 percent minimum of particulates.

Retention capacity of the filters for particulates and iodines is, as a minimum, that amount which could reasonably be released to the reactor building during the postulated design basis accident.

Ducts and equipment are designed to handle saturated air at the pressures and temperatures corresponding to those of the containments to which they can be connected. The corresponding design pressures apply to ducts and equipment up to and including the two isolation valves on each duct.

The system is designed for high reliability. To assure system functional availability during any mode of plant operation, critical components are provided with installed spares, including fans, motors, filters and radiation monitors.

The system equipment is accessible and capable of being tested and maintained during normal plant operation.

c. Operation of the Standby Gas Treatment System

The standby gas treatment system is placed in service automatically to hold negative reactor building pressure. One fan is started and filter valves opened automatically (and the normal reactor building ventilation system taken out of service automatically) in response to any of the following signals:

a. High radiation in the reactor building

b. High pressure in the drywell

c. Manual signal from the control room

The second fan starts automatically in case of failure of the first fan to start. Shutdown of fans is by manual control.

All controls for interrupting any part of the system operation shall be located in the control room or at a station which is accessible under conditions requiring potential use of the standby gas treatment system. If located at such a station, such controls shall have suitable locks to prevent unauthorized operation.

Isolation valves in the standby gas treatment system close on loss of motive power, such as air or electric power, and are connected to a source of standby power.

Two radiation detectors are installed on the common discharge of the fans for the purpose of monitoring penetration of fission products through the filters.

Air flow controls, such as orifices, are provided to prevent excessive pressure on, or flow through, ducts, filter units or other equipment, considering possible pressures which could be imposed on the system.

4.3.4 Surveillance and Testing

Means are provided for periodically testing the system performance during normal plant operation by operating each fan and controls. Provisions are made for periodic tests of each filter unit at approximately full flow and at approximately half flow capacity. These tests will include determination of differential pressure across each filter and filter efficiency.

Connections for testing, such as injections and sampling, are located to provide adequate mixing of the injected fluid and representative sampling and monitoring, so that test results are indicative of performance under design conditions.

A flow rate indicator is installed in the system to perform the reactor building leak rate tests when required. It is planned to periodically test the flow capability of the system in conjunction with the reactor building integrity tests.

4.4 Stack

‡ Dresden Units 2 and 3 utilize a 310 foot stack for disposal of off-gas wastes. The currently existing
‡ gaseous waste disposal limits will apply to the combined off-gas from the Unit 1 stack and the Units 2 and 3
‡ stack. (See also Section VI-3.0). The stack is designed as a Class I structure as defined in Section V-6.

5.0 OTHER SAFEGUARDS PROVISIONS OR SYSTEMS

5.1 Flow Restrictors

(Same as Unit 2 PDAR as amended)

5.1.1 Performance Objectives

The objective of the flow restrictors is to serve as a constriction in each main steam line as close to the reactor vessel as practical, which, in conjunction with the isolation valve, will accomplish the following in the event of a postulated incident in which a complete severance of a main steam line occurs:

a. Limit loss of coolant from the primary system to the extent that the coolant level in the vessel will not fall below the top of the core within the time it takes to close the main steam line isolation valves.

b. Reduce the amount of moisture carryover before closure of the steam line isolation valves.

c. Reduce the probability of forming water slugs of high velocity in the steam line.

5.1.2 Bases

In the process of designing a reactor, accidents of many types and unusual severity are postulated as a basis for design. One of these is a complete, severance of a main steam line between the containment vessel and the steam turbine. Because of the rapid de-pressurization, a steam water mixture will leave the vessel. Loss of coolant from the reactor vessel under such accident conditions is minimized and the performance objectives realized through the combined use of the flow restrictor and the steam line isolation valves.

In the event of a steam line break downstream of the nozzle, flow chokes in the decreased area by a two-phase mechanism similar to the critical flow phenomena in gas dynamics. This limits the steam flow rate, thereby reducing the reactor coolant blowdown, thereby limiting the fuel clad temperature increase subsequent to the blow down. This reduces the probability of fuel failure and its consequences. Pressure surges caused by the water-steam slugs impacting the flow limiter are within the design pressure while beyond the flow limiter the velocities are reduced and pressure surges are of no consequence.

5.1.3 Description of Flow Restrictors

The flow restrictor is a simple, conical, nozzle-like reducer welded into each main steam line between the reactor vessel and first isolation valve. The restrictor has no moving parts and is located as close to the reactor vessel as practical. The ratio of the nozzle throat area to steam line flow area is approximately 0.5 which results in an irreversible pressure drop of about 5 psi. This design limits the steam flow in the severed line to about 150% of its rated flow, yet it results in negligible increase in steam moisture content during normal operation. The nozzle will be designed to withstand the maximum pressure difference expected following complete severance of the main steam line.

5.1.4 Surveillance and Testing

The flow restrictors have no moving parts and require no maintenance. Only very slow erosion will occur with time, with the only possible effect being on steam flow calibration. Such a slight enlargement will not be significant from a safety standpoint. Any gross changes in the throat would be detected through

shifts in its calibration long before they are of sufficient magnitude to affect its operation as a safeguards device.

5.2 Isolation Condenser System

(Same as Unit 2 PDAR as amended)

5.2.1 Performance Objectives

The main objective of the isolation condenser system is to avoid overheating of the reactor fuel in the event that reactor feedwater capability is lost and other normal heat removal systems which require a-c electrical power for operation are not available.

In order to meet this objective the following will be used in design:

In the event of reactor isolation and scram from any expected power level, the isolation condenser heat exchangers will accommodate removal of decay heat before any water lost through operation of the pressure relief valves has impaired core cooling.

The system has the capacity for the removal of decay heat without addition of water for a reasonable time based on an estimate of the maximum time which might be required to restore pumping power for make-up even under most unusual conditions.

5.2.2 Bases

Interruption of power which drives the reactor feed pumps causes reactor scram due to low water level in the reactor vessel. The water level in the vessel continues to decrease after scram due to the boiloff, caused by fuel fission product decay heating, through either system relief or bypass valves. Since this water level decrease could ultimately cause uncovering of the core, a means must be provided to limit it until feed pumping power is restored. To accomplish this, an isolation condenser is provided. This condenser is connected to the reactor system and operates by natural circulation without the need for driving power other than that used to place the system in operation. This isolation condenser also serves as an alternate heat sink when the reactor is isolated from its normal heat sink (the main condenser).

5.2.3 Description

The isolation condenser system operates by natural circulation without the need for driving power other than the d-c electrical system used to place the system into operation. The system consists of two condensers and associated piping and valves. Piping and valves are provided connecting to the reactor vessel for each isolation condenser so that they act as independent sub-systems. Each condenser consists of two tube bundles immersed in a large water storage tank.

In operation of the isolation condenser, steam flows from the reactor, through the tubes of the heat exchangers; after condensing it returns by gravity to the reactor. The valves on the steam inlet lines are normally open so that the tube bundles are at reactor pressure. The isolation condenser is placed in operation by opening the condensate return valve to the reactor system. This is done automatically on high reactor pressure or it can be done at any time by manual control. The normally closed drain valves are d-c operated and remain available on a-c electrical power line failure. During operation, the water on the shell side of the condensers will boil and vent to the atmosphere while condensing steam inside the tube bundles.

Radiation monitors are provided on the shell vents so that in the event of abnormal radiation levels the tube side of the heat exchangers can be isolated from the reactor by closing valves.

The water stored in the shells of the isolation condensers is supplemented with make-up water from two sources, i.e., from the condensate storage tanks through transfer pumps, and from the station fire protection system. The transfer pumps are provided with power from that portion of the auxiliary bus which is supplied by the standby diesel generator. The fire protection pump system is supplied by a separate diesel-driven pumps unit.

The reference design size of the isolation condensers to meet the performance objectives is as follows:

The two isolation condensers are designed to condense a total of 812,000 lbs/hr. at 1150 psig at saturation temperature. This is equivalent to approximately 150 MW thermal.

5.2.4 Surveillance and Testing

The functional operability of the isolation condenser system will be tested at the time of system installation and plant startup. The individual isolation valves can also be tested periodically by remote manual actuation from the control room.

Leakage of reactor water through the heat exchanger can be detected by the shell side radiation monitors, shell side water and tube inlet temperature indications.

6.0 STRUCTURAL AND SHIELDING DESIGN

6.1 Structural Design

(Same as Unit 2 PDAR as amended)

6.1.1 Performance Objectives

a. Aseismic Design

The aseismic design for critical structures and equipment will be based on dynamic analyses using acceleration response spectrum curves which are based on a ground motion of 0.1 g. The design will be such that a safe shutdown can be made during a ground motion of 0.2 g.

b. Wind Loadings

All structures will be designed to withstand a wind velocity of 110 mph. The design will be in accordance with standard codes and prudent engineering practices.

Where failure could affect the operation and functions of the primary containment and reactor primary system, structures will be designed to assure that safe shutdown of the reactor can be achieved considering the effects of possible damage to these structures when subjected to the forces of short term tornado loadings.

6.1.2 Bases

The structural design of buildings and components whose failure could cause significant release of radioactivity or which are vital to safe shutdown and isolation of the reactor is to be based upon the recommendations of qualified experts. Based upon the seismology report in Volume III, Section 4 of the Dresden Unit 2 PDAR an earthquake having an intensity of 7 on the Modified Mercalli Scale is the maximum anticipated for the site. To assure that the plant can be shut down with containment and heat removal facilities intact, such principal structures will be designed to accomodate a ground motion of 0.2 g. Care will be taken to assure that components, structures, and equipment will not fail in a brittle manner. Thorough, detailed dynamic analysis will be made to assure that appropriate aseismic design features are incorporated in the design.

The maximum sustained wind velocity to be anticipated at the site is on the order of 100 miles per hour, as noted in the meteorology data in Volume III, Section 4 of the Dresden Unit 2 PDAR. The plant structures will be designed to withstand such wind loadings.

The site is in a geographic area which could be subjected to tornadic wind conditions. If such winds were to traverse the site, the reactor will be capable of being shut down safely and safe secured in a shutdown mode.

6.1.3 Discussion of Earthquake Resistance and Wind Loading Resistance Design

a. Earthquake Resistance

The design of containment structures and other Class I structures and equipment will be based on a dynamic analysis using the acceleration response spectrum curves shown in Figures 54 and 54A. These

preliminary curves were prepared by John A. Blume and Associates, Engineers, after reviewing the seismology, geology, and other pertinent data at the site. The curves are based on a ground motion of 0.1g.

The natural periods of vibration will be calculated for buildings and equipment which are vital to the proper shutdown of the plant. The following damping factors will be used for strong vibrations within the elastic limit:

Item	% of Critical Damping
Reinforced Concrete Structures	5.0
Steel Frame Structures	2.0
Welded Assemblies	1.0
Bolted and Riveted Assemblies	2.0
Vital Piping Systems	0.5

The earthquake design will be based on ordinary allowable stresses as set forth in the applicable codes. A one-third increase in allowable working stresses because of earthquake loading will not be used. The design will be such that a proper shutdown can be made during ground motion having twice the intensity of the spectra shown in Figure 54, even though stresses in some of the materials may exceed the yield point.

The Dresden Unit 2 and 3 reactor building is designed to withstand an internal pressure of 7 inches of water without structural failure. Using the method of analysis presented in NAA-SR-10100, "Conventional Buildings for Reactor Containment,"[1] and an internal building pressure of 14 inches of water, it was calculated that 10 cfm air leakage would result due to cracks of approximately 330,000 linear feet in the concrete below the refueling floor.

During a seismic disturbance having a ground acceleration of 0.2 g, i.e., twice the Dresden Unit 2 and 3 design earthquake, calculations indicate a shearing stress of about 200 psi in the reactor building concrete walls. Since this exceeds the allowable 187 psi, some cracking will take place. It is estimated that during the earthquake, approximately 1000-1200 ft of additional cracking will occur. It is also assumed that half of these cracks will close after this disturbance, leaving about 600 feet of cracks remaining open. The average width of these cracks is assumed to be 20 mils. This is about 14 times greater than the average crack width referred to in the above report, but is taken to provide a conservative assumption for cracks which do not reclose. The calculated additional leakage through the walls is then about 50 cfm. For the design earthquake (0.10g) it is expected that all cracks will close after this disturbance.

If it becomes necessary to isolate the reactor secondary containment, the standby gas treatment system is automatically placed in operation to (1) hold the reactor building at a subatmospheric pressure of -0.25 inches of water in order to prevent exfiltration, and (2) treat the effluent from the building before discharge to the ventilation stack at the rate of one building air change per 24 hours, i.e., approximately 4000 cfm. Therefore, the wall leakage due to cracking is a very small part of the required 4000 cfm, i.e., 10 cfm or 0.25% of normal wall infiltration.

(1) AEC Research and Development Report NAA-SR-10100, "Conventional Buildings for Reactor Containment", R. L. Koontz, et.al., July 25, 1965

As a result of the seismic disturbance (0.20g) an additional 50 cfm infiltration through the concrete walls can be expected. This small additional flow can easily be handled by the standby gas treatment system.

The foregoing design criteria are for Clas I items as specified by the following classification. Class II items will be designed following the normal practice for the design of power plants in the State of Illinois, but as a minimum this will not be less than given in the "Uniform Building Code" for Zone 1, including the allowable stresses specified for combined functional and earthquake loadings. The usual practice of determining the stress due to earthquakes by applying a static load based on a specified seismic coefficient will be followed.

The maximum allowable stresses used for various loading conditions are given for representative examples of some of the most critical Class I structures in Tables V-3, V-4, and V-5.

In Table V-3 the term "Dead Loads" includes the weight of the drywell vessel and all appurtenances. "Operating Loads" include the gravity loads from equipment supports, the restraint to thermal movement of the drywell vessel due to the compressible material between the vessel and the concrete external to the drywell. The "Loss of Coolant Load" is the drywell design pressure of 62 psig. The summation of loads as stated in Condition 1 of Table V-3 provides the design basis for the primary containment. For conditions of normal operation, the loads are much less than Condition 1 and will be determined during the design.

In Table V-4, the term "Dead Loads" includes the weight of the structural components and the architectural appurtenances of the reactor building. "Operating Loads" consist of gravity loads from all equipment and piping, and for the weight of water over the reactor during refueling and in the storage pools. The "Live Loads" will include loads which can be expected throughout the reactor structure, i.e., roof and crane loads, movable equipment, the shipping cask, stored supplies, etc.

TABLE V-3

ALLOWABLE STRESSES - PRIMARY CONTAINMENT

Material SA212 Grade B to SA300

Loading Condition	General Membrane		General Bending Plus Local Membrane Plus General Membrane		General Membrane Plus Secondary Stresses	
	Allowable Stress psi	Percent of Y.S.	Allowable Stress psi	Percent of Y.S.	Allowable Stress psi	Percent of Y.S.
1 Dead Loads plus Operating Loads plus Loss of Coolant Loads plus Seismic Loads (0.1g)	19,250	50.7	28,875	75.97	52,500	138
2 Dead Loads plus Operating Loads plus Loss of Coolant Loads plus Seismic Loads (0.2g)	Safe Shutdown of Plant can be achieved (See Note 1 below)					

Note 1: The stress criteria for Loading Condition 2 is as given in Section V-6.1.3a above.

Y. S.= Minimum yield stress of the material.

TABLE V-4

ALLOWABLE STRESSES FOR REACTOR BUILDING

Loading Conditions	Reinforcing Steel Max. Allowable Stress	Concrete Max. Allowable Compression Stress	Concrete Max. Allowable Sheer Stress	Concrete Max. Allowable Bearing	Structural Steel Tension on the Net Section	Structural Steel Shear on Gross Section	Structural Steel Compression on Gross Section	Structural Steel Bending
1 Dead Loads Plus Live Loads, Plus Operating Load Plus Seismic Loads (0.1g)	0.5 Fy	0.45 f'c	$1.1\sqrt{f'c}$	0.25 f'c	0.60 Fy	0.40 Fy	Varies with Slenderness Ratio	0.66 Fy to 0.60 Fy
2 Dead Loads Plus Live Loads, Plus Operating Loads Plus Wind Loads	0.667 Fy	0.60 f'c	$1.467\sqrt{f'c}$	0.333 f'c	0.80 Fy	0.53 Fy	Varies with Slenderness Ratio	0.88 Fy to 0.80 Fy
3 Dead Loads, Plus Live Loads, Plus Operating Loads, Plus Seismic Loads (0.2g)		Safe Shutdown of the Plant can be Achieved (See Note 1 Below)						

Fy = Minimum yield point of the material

f'c = Compressive strength of concrete

Note 1 = The stress criteria for Loading Condition No. 3 is given in Section V-6.1.3a above.

Table V-5 is a tabulation of allowable stresses for Class I piping.

TABLE V-5

ALLOWABLE STRESSES FOR CLASS I PIPING

	Loading Condition	Allowable Stress
1.	Thermal Expansion	S_A
2.	M. O. L. + S. L.	S_h
3.	M. O. L. + 2 x S. L.	Safe shutdown can be achieved. (See Note 1 of Table V-3.

M. O. L. = Maximum operating loads including design pressure and temperature, weight of piping and contents including insulation and the effect of supports and other sustained external loadings.

S. L. = Seismic loads due to the design earthquake (0. 10g).

2 x S. L. = Seismic loads due to twice the design earthquake (0. 20g).

$S_A = f(1.25\, S_c + 0.25\, S_h)$.

Where:

f = stress range reduction factor for cyclic conditions.

S_c = allowable stress in cold condition per ASA B31. 1.

S_h = allowable stress in the hot condition (design temperature) per ASA B31. 1.

The stresses resulting from the earthquake accelerations shown on the family of curves given in Figures 54 and 54A, when combined with functional loading stresses, will be maintained within the established allowable working stresses for the particular materials involved.

The combined stresses resulting from functional loadings and from an earthquake having a ground acceleration of 0. 20g will be such that a safe shutdown can be achieved. The combined earthquake and functional load stresses probably will not exceed yield stress. However, where calculations indicate that a structure or piece of equipment will be stressed beyond the yield point, an analysis will be made to determine its energy absorption capacity. This capacity will be such that it exceeds the energy input from the earthquake. In addition, the design will be reviewed to assure that any resulting deflections or distortions will not prevent the proper functioning of the structure or piece of equipment and will not endanger adjacent structures or components.

For the design of Class I structures and equipment, the maximum horizontal acceleration and the maximum vertical acceleration will be considered to occur simultaneously. Where applicable the resulting seismic stresses for the two motions will be combined linearly. The vertical acceleration assumed will be equal to 2/3 the horizontal ground acceleration.

The two classes of structures applicable to the earthquake design requirements are as follows:

Class I - Structures and equipment whose failure could cause significant release of radioactivity or which are vital to a proper shutdown of the plant and the removal of decay heat.

Class II - Structures and equipment which are both essential and non-essential to the operation of the station, but which are not essential to a proper shutdown.

Class I - Critical Structures

Drywell, Vents, Torus and Penetrations
Reactor Building
Control Room
Spent Fuel Pool
310 Foot Stack

Class I - Critical Equipment

Nuclear Steam Supply Systems

- Reactor Vessel
- Reactor Vessel Supports
- Control Rods & Drive System including equipment necessary for scram operation
- Control Rod Drive Thimble Supports
- Fuel Assemblies
- Core Shroud
- Core Supports
- Steam Separator
- Steam Dryer
- Recirculating Piping System including valves and pumps
- All piping connections from the Reactor Vessel up to and including the first isolation valve external to the drywell
- Isolation Valves

Reactor Cooling and Standby Systems

- Isolation Condenser System
- Standby Liquid Control System
- Core Spray System
- Reactor Building Closed Loop Cooling
- Containment Cooling Systems and associated Service Water System

Standby Gas Treatment System
Fuel Storage facilities, to include spent fuel and new fuel storage equipment.

Standby Electrical Power Systems

- Station Battery
- Standby Diesel Generator

Emergency Busses and other electrical gear and power to critical equipment including startup transformer

Instrumentation and Controls

Reactor Level Instrumentation
Feedwater Control Instrumentation
Standby Liquid Control System Instrumentation
Manual Reactor Control System
Control Rod Instrumentation
Control Rod Position Indicating System
Reactor Protection System
Neutron Monitor System
In-Core Neutron Monitor System
Fuel Rupture Detection System
Area Monitors
Liquid and Gas Bearing Containers for Radwaste and Off-Gas System

Class II Structures

Turbine Building
Radioactive Waste Building
Service Building
Office Building
Screenhouse Superstructures
Intake and Discharge Structures

Class II Equipment

Turbine Generator
Condenser
Cranes
Feedwater Heaters and Pumps
Shutdown Cooling System
Condensate Storage Tanks and Pumps
Station Auxiliary Power Busses
Reactor Cleanup System
Waste Disposal System
Moisture Separators
Condensate Demineralizer System
Air Compressors and Receivers
All other piping and equipment not listed under Class I.

b. Wind Loading Resistance

The technical literature provides little information on the wind velocities within a tornado. The U.S. Weather Bureau has issued a publication [1] which states:

"No structural damage is known to have resulted to a reinforced concrete building in a tornado."

A most important design and safeguards consideration is the question of what damage level to evaluate. Recognition is given to the fact that superstructure damage could be incurred to the reactor building, turbine building, storage tanks, and incoming power lines without affecting the ability to shutdown the reactor and to maintain integrity of containment and certain heat removal systems during and following a tornado which might traverse the site. Simultaneous damage to all of these items is not expected, yet as a design objective the power plant may be safely shutdown and maintained in a safe shutdown condition with the loss of all such superficial equipment.

Components which directly affect the ultimate safe shutdown of the plant are located either under the protection of reinforced concrete or are located underground. These components include the following:

The Reactor Primary System
Shutdown Heat Exchangers
Control Rod Drive Hydraulic Equipment
Standby Liquid Control System
Primary Containment and Isolation Valves
Isolation Condenser System

Containment Cooling System
Service Water System
Station Battery
Standby Diesel Generator
A Portion of the 34.5 KV Incoming Electrical Transmission Line
Electrical Controls and Instrumentation for Above Systems
Control Room

With the above equipment available, the plant is an independent entity with safety defense capability in depth to maintain a safe shutdown condition for prolonged periods, if required.

6.2 Shielding

(Conforming amendment of Unit 2 PDAR required where indicated by ‡)

6.2.1 Performance Objectives

The primary performance objective of the radiation shielding is to minimize the exposure of plant personnel to radiation emanating from the reactor, turbine and their auxiliary systems. The radiation levels prevalent during plant operation, as well as those experienced upon shutdown, are recognized in the determination of the shielding requirements.

---

[1] Gilbertson, V. C. and Magenau, E. F., "Tornadoes," AIA Technical Reference Guide, TRG 13-2, U.S. Weather Bureau.

The institution of supplemental control procedures for access to radiation areas and the administrative limitations upon receipt of radiation exposure assure that exposures are minimized.

The secondary performance objective of the radiation shielding is to minimize radiation effects upon operating equipment. Specific fabrication materials are given individual consideration. Of principal concern are organic materials used in the equipment, e.g. insulation, rubber tank linings and gaskets.

6.2.2 Bases

The basis for the primary objective is compliance with the requirements of 10 CFR 20 and the regulations of the State of Illinois. The compliance with these regulations is achieved by the shielding provided in the plant and is implemented by establishing occupancy requirements in various areas of the plant for which the radiation dose and dose-rates can be determined. These occupancy requirements and radiation dose-rates are presented in the following table.

Degree of Access Required	Design Radiation Dose Rate, at Shield Wall mrem/hr.
Continuous Occupancy	
Outside controlled areas	0.5
Inside controlled areas	1
Occupancy up to 10 hours/week	6
Occupancy up to 5 hours/week	12

Radiation areas with dose-rates higher than those listed above may be entered on a time limit basis.

The basis for the secondary performance objective (protection of equipment) is to limit the radiation dose to approximately 10^6 rads for the materials of concern for the expected service life of the equipment or individual parts.

6.2.3 Description of Shielding Requirements

The shielding materials required to meet the preceding objectives are primarily concrete, water and steel. High density concrete lead and neutron absorption material may be used as alternates in special applications.

Shielding requirements for the two principal plant buildings and miscellaneous structures are described in the following sections.

a. Reactor Building

The design dose-rate in most areas outside of the drywell in the reactor building is one mrem/hr; consequently, the drywell and its contents are shielded so that most areas outside it and outside the pressure suppression chamber are accessible.

Within drywell, shielding is provided between the reactor vessel and drywell walls to: (1) minimize gamma heating in the drywell concrete, (2) provide shielding for access in the drywell during shutdown and, (3) minimize activation of drywell materials nearer the reactor core.

Recirculation piping penetrations of the shield wall around the reactor vessel are shielded from the core by shielding inside the reactor vessel. These penetrations are also provided with removable shielding sections so access is available for inspection of the connections or recirculation piping to the reactor vessel.

The control rod drive area is shielded from recirculation piping which becomes a radiation source during shutdown as a result of deposited activation products.

Radiation area outside the primary containment which exceed one mrem/hr. are:

1. Fuel pool
2. Reactor water clean-up demineralizer equipment
3. Isolation condensers
4. Shutdown heat exchangers
5. The operating floor directly above the drywell shielding plugs
6. Miscellaneous equipment, e.g. fuel pool heat exchanger

b. Turbine Building

The major radiation source in the turbine building is N-16. Although shielding is provided around the following areas, nevertheless, access to these area generally will not be permitted during full power operation:

1. Condenser-hotwell area
2. Feedwater heaters
3. Air ejector and gland seal exhauster
4. Condensate demineralizer tanks - regeneration equipment
5. Steam and extraction piping

It is anticipated that the turbine operating floor is accessible.

c. Miscellaneous Structures and Component Shielding

The control room shielding design has not been definitely established. The control room shielding design criterion is to limit the dose in the control room to 0.5 rem in any 8 hour period following a design accident in either Unit 1, Unit 2, or Unit 3. The Dresden Unit 1 control room roof thickness of 3 feet allows occupancy following the "worst reasonable accident" from Unit 1 reactor. The control room roof thickness for Units 2 and 3 is based on the same criteria, including some shadow shielding supplied by the Unit 1 control room. The 1.5 Mev gamma attenuation between the Unit 1 containment and the Unit 2 and Unit 3 control rooms including buildup, is 10^6, taking no credit for distance. The roof thickness is also adequate to allow occupancy of the Unit 2 or Unit 3 control room following Unit 2 or Unit 3

‡ design basis accidents. The 1.5 Mev gamma attenuation between the Units 2 and 3 reactor building and control rooms, including buildup, is 10^5, taking no credit for distance. The 1.5 Mev gamma attenuation between the drywell and the control room is 10^{15}. Additional shadow shielding is used to ensure that radiation doses as a consequence of a maximum credible accident in any of the units will be in accordance with 10CFR20.

The air ejector off-gas shielding is based upon the N-16 and noble gases as principal radiation sources. The noble gas component of the combined radiation source is based upon the average annual per-
‡ missible release rate from the 310 foot stack. Shielding for the off-gas filters is based upon the particulate radioactivity accumulation due to the noble gas decay over a 30 minute holdup time.

The radwaste building shielding is provided to maintain the dose-rate in the building control room at approximately one mrem/hr. Pump and valve locations within the building have design radiation levels of 6 to 12 mrem/hr., while the solid waste preparation area is shielded to a design dose-rate of one mrem/hr.

6.2.4 Surveillance and Testing

The radiation shielding is tested for adequacy during initial plant startup to detect any design deficiencies, particularly those resulting in radiation streaming through shield penetrations. Periodic surveys are made during operation to detect changes in the radiation levels in the various areas of the plant.

VI. RADIOACTIVE WASTE CONTROL SYSTEMS

VI. RADIOACTIVE WASTE CONTROL SYSTEMS

1.0 SCOPE

(Same as Unit 2 PDAR as amended.)

Purpose of the radioactive waste control systems plant is to collect potentially radioactive wastes, process and dispose of them in a safe manner, without limiting plant operations or availability. Equipment, instrumentation and operating procedures are provided to assure that the discharge of radioactive wastes will not exceed license limits.

Radioactive wastes resulting from plant operation are classified as liquid, gaseous and solid wastes. Equipment and systems for processing and handling these wastes are basically the same as that used in plants of similar design, including Dresden Unit 1, Oyster Creek and Nine Mile Point. Such equipment and systems assure control of waste streams at all times and include features to monitor and limit the quantity of radioactive wastes released to the environment within the limits prescribed by 10 CFR 20.

The following definitions pertain to radioactive wastes as used herein:

a. Airborne Radioactive Wastes

Gaseous or particulate material venting directly from process equipment containing radioactive material, and exhaust air from plant containment volumes during periods when ventilation isolation is specified, are considered as airborne radioactive waste.

b. Liquid Radioactive Waste

Liquids from the reactor process system, or liquids which could become contaminated with liquids from the reactor process system by the failure of any single protection feature provided, are considered as liquid radioactive waste.

c. Solid Radioactive Waste

Solids from the reactor process system, solids in contact with reactor process system liquids or gases, and radioactive solids from spaces housing the reactor process system, are considered as solid radioactive waste.

2.0 LIQUID RADIOACTIVE WASTE CONTROL

2.1 Performance Objectives

(Same as Unit 2 PDAR as amended.)

The performance objective of the liquid radioactive waste system is to collect, process and discharge liquid radioactive wastes in a safe, efficient manner without limiting plant operations or availability. The system is designed to provide a means for processing potentially radioactive liquids and to collect processed liquid wastes in batches which may be sampled and analyzed to determine their suitability for release into the Illinois River through the discharge canal.

The total liquid radioactive waste discharge from the plant will meet the requirements of 10 CFR 20 and State of Illinois regulations. Since no Ra-226 or Ra-228 of plant origin will be present, the discharge concentration for an otherwise unidentified mixture is 10^{-7} μc/cc. If certain other radioisotopes which, when determined by the methods set forth in 10 CFR 20, Appendix B, Paragraph 5, are considered absent, then higher permissible concentrations may be used for discharge. Waste discharges are averaged for the calendar year.

The design provides for solidification and/or dewatering of liquid wastes, sludges and resins to facilitate storage and disposal as solid wastes.

2.2 Bases

(Conforming amendment of Unit 2 PDAR required where indicated by ‡.)

‡ Dresden Units 2 and 3 will use a common liquid waste disposal system, which is similar (except as to capacity) to those incorporated and demonstrated on Dresden Unit 1 and SENN. The larger capacity of the combined waste disposal system does not affect its functional capability.

‡ The estimated combined maximum daily discharge of both units averaged over a calendar year of ‡ 54 x 10^4 μc/day in 940,000 gpm circulating water at a concentration of 10^{-7} μ c/cc, meets the limits prescribed by 10 CFR 20. However, the expected activity discharge is less than one-fourth that permissible under 10 CFR 20. Even this analysis grossly overestimates the actual contribution to environs radioactivity since a discharge concentration of 10^{-7} μc/cc assumes that the activity all consists of radioisotopes Sr-90 and Pb-210. In actual fact, the maximum permissible concentration for the waste mixtures discharged from Dresden Unit 1, which utilizes substantially the same kind of fuel as will be ‡ used in this unit, is of the order of 10^{-5} μc/cc. Since additional dilution of wastes by the normal river flow further reduces radioactivity, concentrations of waste activity actually in the river are of the order of one one-thousandth of the maximum permissible concentration for the mixtures generally discharged.

Activity released with the liquid wastes is difficult to define since liquid wastes come from a number of sources and the quantities of activity is a strong function of plant operation including holdup time. The total amount of activity and the relative quantities of each isotope may vary significantly from day to day.

‡ The following list of the most significant isotopes in the combined liquid waste discharge off-site may be considered representative:

Isotope	Half-Life	Release Rate $\mu c/day$
Sr-89	54 d	3.0×10^3
Sr-90	28 y	2×10^1
Sr-91	9.7 h	1.5×10^4
Cs-137	28 y	3.0×10^1
Ba-140	12.8 d	8×10^3
I-131	8.05 d	2×10^3
I-133	20.8 h	3.0×10^3
Cu-64	12.8 h	2×10^2
Co-58	72 d	7.0×10^4
Co-60	5.27 y	9.0×10^3

The above information is based on data obtained from operation of Dresden Unit 1, adjusted wherever necessary to conform to the combined discharge from Units 2 and 3.

2.3 Description of Liquid Radioactive Waste System

2.3.1 General

(Same as Unit 2 PDAR as amended.)

The liquid radioactive waste system collects, treats, stores and disposes of all radioactive liquid wastes. These are collected in sumps and drain tanks, then transferred to the appropriate tanks in the Radwaste Building for further treatment, storage and disposal. Wastes to be discharged from the system are handled on a batch basis with each batch being analyzed and handled appropriately. Final disposition of processed liquid wastes consists of return to the condensate system, storage awaiting solidification and disposition off-site as solid wastes or disposal through the discharge canal.

Those batches whose radioactivity concentrations are sufficiently low as to allow disposal in the Illinois River are released into the discharge canal through a distribution pipe, in a manner to provide good mixing, and are diluted with effluent condenser circulating water in order to achieve a discharge con-concentration of less than 10^{-7} $\mu c/cc$ at the point of entry into the river.

Non-radioactive wastes are kept separate by virtue of location of such sources outside of controlled access areas. These wastes are discarded by conventional means, such as to storm drains or circulating water discharge.

To prevent spread of radioactivity to plant ground or other areas outside the confines of the plant, those tanks, equipment and piping, which contain liquid radioactive wastes are enclosed within the Radwaste Building or pipe trenches. Consequently, in the event of leaks, spills and overflows from such equipment, control of the liquid radioactive waste is assured. Sumps and pumps collect and return such wastes to the system for processing.

Equipment is arranged and shielded to permit operation, inspection and maintenance with minimum personnel exposure. For example, sumps, pumps, instruments and valves are located in accessible areas, although dependent upon controlled access procedures, and processing equipment is selected and designed to require a minimum of maintenance.

Protection against accidental discharge is provided by design redundancy, instrumentation for detection and alarm of abnormal conditions, and procedural controls.

2.3.2 Sources and Collection of Liquid Wastes

(Same as Unit 2 PDAR as amended)

Liquid wastes may be classified as either low conductivity, high conductivity, chemical or miscellaneous.

Low Conductivity Waste

Low conductivity liquid waste from piping and equipment drains are collected in: (a) the drywell sump; (b) the reactor building drain tank, and (c) the turbine building clean sump (or condensate drip tank). Such wastes from piping and equipment drains are transferred to the waste collector tank in the Radwaste Building which will also serve to collect low conductivity wastes from the condensate demineralizer regeneration system.

High Conductivity Waste

High conductivity liquid waste (primarily from floor drains) are collected in: (a) the radwaste facility sumps; (b) the reactor building floor drain sump; and (c) the turbine building floor drain sump. Such high conductivity waste will be transferred to the floor drain collector tank in the radwaste building.

Chemical Waste

High conductivity wastes from the condensate demineralizer regeneration system are collected in the waste neutralizer tank in the radwaste building. The waste neutralizer also collects laboratory drains, shop decontamination wastes and other high conductivity, variable activity wastes.

Miscellaneous Liquid Waste

Primary system water resulting from refueling and startup operation is discharged via the fuel pool filters to the condenser hotwell and returned to condensate storage via the condensate pump and the condensate demineralizer.

Liquid waste from the laundry operation and personnel decontamination sink and shower drains are collected in one of two laundry drain tanks.

A waste surge tank is provided in the waste system to collect the water from system surges and to provide interim storage for wastes recycled because they do not meet discharge requirements.

2.3.3 Liquid Radioactive System Arrangement

(Same as Unit 2 PDAR as amended)

The liquid radioactive waste system is depicted in Figure 51. It consists of three subsystems and auxiliary equipment.

Low Conductivity Waste Subsystem

Low conductivity wastes, collected in the waste collector tank and waste surge tank, are processed through a pressure precoat type filter (Waste Collector Filter) and a mixed-bed waste demineralizer and then collected in one of two waste sample tanks. After these wastes are sampled and analyzed, they normally are discharged to the condensate storage system.

High Conductivity (Low Radioactivity Content) Waste Subsystem

High conductivity wastes with generally low radioactivity content will be collected in the floor drain collector tank. These wastes will be processed through a pressure precoat type filter (Floor Drain Filter) and then collected in one of two floor drain sample tanks. After these wastes are sampled and analyzed, they will normally be discharged to the circulating water discharge system.

Chemical Waste Subsystem

High conductivity wastes with generally low radioactivity content, collected in the waste neutralizer tank, are sampled and neutralized as required and then processed in one of two ways, as follows:

a. Wastes having radioactivity concentrations which would result in concentrations after discharge less than the established limit are processed through the floor drain filter and collected in one of two floor drain sample tanks. After sampling and analysis, normally this waste is released to the discharge canal.

b. Wastes having high radioactivity concentrations are pumped to the waste concentrator for treatment. Distillate is condensed and collected in the waste collector tank for treatment with low conductivity wastes. The concentrate is collected in the concentrated waste storage tank. This concentrated waste is then mixed with a water absorbent material to bind free water, packaged into steel drums, and stored as solid waste for future shipment off-site for disposal.

Auxiliary Equipment

Auxiliary equipment includes:

1. Tanks and pumps for adding filter aid to the filters;

2. Tanks for collection of filter sludge and spent demineralizer resin;

3. Centrifuge utilized for dewatering spent demineralizer resins and filter sludges, and;

4. Equipment for drumming, handling and storage of solid wastes.

2.3.4 Control of Radioactive Liquid Waste System

(Conforming amendment of Unit 2 PDAR required where indicated by ‡.)

System operation is controlled from a local control panel in the Radwaste Building. Instrumentation, including alarms, is provided for both process control and for detection and alarm of abnormal conditions. The various alarms located at the local control panel provide signals of specific abnormal conditions. A general trouble alarm is also provided in the respective control rooms of Units 2 and 3.

Liquid monitoring systems are described in Section VIII-2.4.

2.4 Surveillance and Testing

The effectiveness of the design and operation of the liquid waste disposal system is ultimately measured by the monitoring programs maintained by Commonwealth and the State of Illinois as explained in Section 8.0 of Volume III of the Unit 2 PDAR filed in AEC Docket 50-237.

3.0 GASEOUS RADIOACTIVE WASTE CONTROL

3.1 Performance Objectives

(Conforming amendment of Unit 2 PDAR required where indicated by ‡)

The process off-gas system is designed so that aggregate release of radioactive materials from
‡ Units 1, 2 and 3 shall not exceed the stack release limits prescribed in AEC Facility License DPR-2, as amended.

3.2 Bases

(Conforming amendment of Unit 2 PDAR required where indicated by ‡)

‡ The present 300 foot stack for Unit 1 continues to serve solely for the discharge of gaseous effluents
‡ from that Unit. A new 310 foot concrete stack is used to discharge gaseous waste effluents from Units 2
‡ and 3. Coordinated stack gas radioactivity monitoring is provided to control the aggregate release of
‡ radioactivity from both stacks so that the stack release limits described in AEC Facility License DPR-2,
‡ as amended, shall not be exceeded.

Emission rates from the Unit 1 300 foot stack, even under conditions when significant leakage from fuel rods occurred, resulted in an annual dose at the site boundary which was less than 1/100 of the maximum allowable annual dose of 500 mrem/year, specified by 10 CFR 20, to any person off-site.

3.3 Description of the Gaseous Radioactive Waste System

(Conforming amendment of Unit 2 PDAR required where indicated by ‡)

The off-gas system, shown in Figure 52 removes radioactive gases from the reactor primary system. The system includes monitoring and appropriate holdup for radioactive decay. Provisions are made for
‡ system isolation. System discharge is made to the atmosphere through the 310 foot stack.

Noncondensible radioactive gases are removed from the main condenser by the air ejector. The air ejector exhausts these off-gases into shielded piping, which provides a 30 minute holdup for radioactive decay of short-lived isotopes. These gases are then passed through a set of two high efficiency particulate filters prior to release to the stack. A spare set of filters is provided to assure availability of filtration.

The 30 minute holdup provides ample time to prevent release of fission product gases in excess of ten times the annual average stack release rate limit. When such a release rate is detected, the holdup line is automatically isolated after a 15 minute delay which is provided to permit corrective action to be taken to obviate plant shutdowns.

The system is designed to provide safeguards against the possible explosion hazard due to the hydrogen and oxygen present from the radiolytic decomposition of reactor water. The off-gas system if designed to withstand such an explosion should one occur.

Two air ejector off-gas monitors are provided to continually monitor the off-gas radioactivity. Either monitor can automatically shut the isolation valves in the off-gas line to prevent the release of radioactivity, if the off-gas release exceeds a pre-selected stack release rate. Samples of off-gas can be taken for laboratory analysis to calibrate and check the off-gas monitors (See Section VIII-2.2).

Although the turbine gland seal system also exhausts these gases, the radioactive material content is negligible when compared to the air ejector off-gas. The gland seal condenser is exhausted by a blower into shielded piping, which will provide about a 2 minute holdup to reduce the activity of the short-lived
‡ radioactive gases, and then to the 310 foot stack.

‡ Air ejector off-gases are normally expected to have the composition shown in the following table.

AIR EJECTOR OFF-GAS

	Flow Rate cfm at 130°, 1 atm.
Hydrogen	110
Oxygen	55
Air (assumed condenser leakage)	18 - 42
Water Vapor (to saturate)	33 - 37
Activated noble gases	Negligible
Total	216 - 244

The activation gases are released from the stack at the rate of approximately 300 μc/sec per unit during operation at approximately 2300 MWt. The rate of release of these gases is proportional to the ‡ thermal output of the reactor and the holdup time in the system before release at the stack. For Units 2 ‡ and 3 the combined rate is 400 μc/sec.

Insignificant quantities of activation gases, including Ar-41, Ar-35, and He-3 are released also.

The fission product gases may arise from tramp uranium on the surface of the fuel cladding, from imperfections, or failures which might develop in the fuel cladding. The principal gaseous isotopes from this source discharged from the stack are shown in the following tabulation.

TYPICAL OFF-GAS RELEASE RATES FOR A SINGLE UNIT

‡ (Data Must Be Doubled for Units 2 and 3 Combined Release Rates)

	Isotope	Half-Life	Emission Rate μc/sec.
Activation Gases	N-17	14. s	$<1 \times 10^0$
	N-16	7.35 s	$<1 \times 10^0$
	O-19	29 s	$<1 \times 10^0$
	N-13	10 m	2×10^2
	Ar-41	1.83 h	6×10^0
	Ar-37	34.3 d	2×10^{-4}
	H-3	12.36 y	1×10^{-3}
Noble Gases	Short H. L.	1-41 s	$<1 \times 10^0$
	Kr-89	3.2 m	3×10^0
	Xe-137	3.8 m	9×10^0
	Xe-135	15 m	8×10^1
	Xe-138	17 m	3×10^2

	Isotope	Half-Life	Emission Rate $\mu c/sec.$
Noble Gases (continued)	Kr-87	1.3 h	2×10^2
	Kr-83m	1.86 h	2×10^1
	Kr-88	2.8 h	2×10^2
	Kr-85m	4.4 h	6×10^1
	Xe-135	9.2 h	1×10^2
	Xe-133m	2.3 d	2×10^0
	Xe-133	5.27 d	5×10^1
	Xe-131m	12.0 d	2×10^{-1}
	Kr-85	10.4 y	7×10^{-2}

The solid daughter products of the noble gases are removed in the filter of the off-gas system before release of gases to the 310 foot stack.

If fuel failures were to occur, the quantity of noble gases discharged from the stack would be proportionately higher than shown in the tabulation, and would be dependent upon such factors as the number of failures, the size of failures, and their location in the core. In all cases, the aggregate release of radioactive materials from Dresden Units 1, 2, and 3 shall not exceed the stack release limits prescribed in AEC Facility License DPR-2, as amended, which currently governs operation of Dresden Unit 1.

The stack gas monitoring system (See Section VIII-2.3) is provided to continuously measure the radioactivity of the off-gas discharged from the stack. Provision is also made for sampling the stack flow for isotopic analysis. Composite samplers are installed in the stack sample line to provide an audit of particulate matter and halogen release. These systems provide both a continuous record and control information on stack release.

In addition to the off-gas and turbine gland seal gases that are discharged to the stack for disposal, the dry well gases are vented to the stack when necessary. Drywell atmosphere is exposed to neutron activation around the reactor vessel, resulting in some trace of activation products, such as Argon-41. This atmosphere is contained in a closed system, which is purged when access to the drywell is required. The drywell is also vented during the cold plant startup to accommodate the expansion of drywell atmosphere with increased temperature. Discharge from this system is released through the 310 foot stack to the atmosphere with provisions for filtering, if necessary, by use of the standby gas treatment system.

3.4 Surveillance and Testing

(Same as Unit 2 PDAR as amended.)

Testing of the monitors is described in Section VIII-5.0.

Measurement of radiation levels in the area surrounding the plant site will be continued as a part of the environs monitoring described in Section 8.0 of Volume III of the Unit 2 PDAR filed in AEC Docket 50-237.

4.0 SOLID RADIOACTIVE WASTE CONTROL

(Same as Unit 2 PDAR as amended.)

4.1 Performance Objective

The performance objective of the solid radioactive waste disposal system is to process, package and provide shielded facilities of sufficient capacity to permit the accumulation of packaged solid wastes for radioactive decay and/or temporary storage, prior to shipment from the station for disposal.

The processing, packaging and handling, prior and subsequent to storage are performed in facilities and by procedures, the objective of which are to minimize personnel radiation exposure, prevent spillage of radioactive material containment wastes, while simultaneously providing for cleanup and recovery of spills and for maintenance of equipment.

4.2 Bases

The facilities of the system are designed and operated in such a manner as to preclude, or significantly reduce radiation exposure of personnel to below those limits set forth in 10 CFR 20 and the regulations of the State of Illinois.

The production of packaged solid radioactive wastes suitable for shipment off-site for disposal by either common or contract carriers and in compliance with ICC Regulations is the basis for the secondary performance objective.

4.3 Description of Solid Wastes

The principal origins of solid radioactive wastes are those from the reactor, maintenance of equipment, and operation of the process systems.

4.4 Description of Processing and Handling

The reactor wastes are stored for decay in the fuel storage pool, packaged and transferred to permanent disposal off-site in suitable approved shipping containers.

The maintenance wastes are compressed into bales to reduce volume and packaged for disposal.

The process wastes are collected in tanks, are dewatered, drummed in 55 gallon containers and stored awaiting shipment. Concentrated wastes are mixed with water absorbent material prior to drumming in 55 gallon containers and subsequently stored awaiting disposal. The drum loading is operated with semi-remote equipment, mirrors, TV and conveyors.

5.0 RADIOACTIVE WASTE CONTROL CONSIDERATIONS

5.1 Minimizing Amount of Release

The plant design includes several specific features for reducing or minimizing the amounts of radioactive materials which are released to the environment. This is accomplished primarily by reducing the concentrations of radioactive materials in the waste streams prior to release. In the liquid radwaste control system, radioactive materials are removed from the liquid waste streams by five mechanisms before the streams are released to the discharge canal. First, filters are utilized to remove particulate materials after treatment in the waste neutralizer tank or collection in the several collection tanks. Second, portions of the waste streams are passed through demineralizers and the effluent stream is either treated as waste or the water is reused in the reactor coolant loop. Third, a waste concentrator may be utilized to remove wastes collected in the waste neutralizer tank. The concentrated wastes are mixed with a water absorbant material to eliminate free liquid and put into drums, and the condensate is returned to the waste collector tank for further purification. Fourth, the filter sludges and spent resins are dewatered in a centrifuge. The solids for this operation are placed in the 55-gallon drums, and the liquids are returned in the floor tank for further processing. Fifth, in passing through the various tanks of the radioactive waste system, the wastes are subjected to a holdup time which varies from approximately 2 days to 7 days, which permits substantial decay of the numerous short half-life constituents.

Also, cleanup and condensate demineralizers are provided to purify all feed water which is returned to the reactor so that the inventory of radioactive materials in the reactor coolant is held to the lowest practical level achievable.

Non-condensable gases removed from the reactor water by means of the air ejector, the mechanical vacuum pumps, and the gland seal condenser system are stored or contained temporarily in the hold up line before discharge through the stack. The air ejector gases are provided with a 30 minute holdup period to permit radioactive decay of gases. A 30 minute decay time allows the noble gases of less than the 3.8 minutes half-life to decay to solid daughters. The biologically significant decay chains containing Sr-89, Sr-90, Ba-140, and Cs-137 decay to solids which are removed by the high efficiency off-gas filter. As a result of these process actions, and the fact that halogens remain principally in the reactor water and are removed by the cleanup demineralizer system, radioactive particles and halogens are not released from the off-gas system in significant amounts.

5.2 Maximizing Natural Dispersion

Both the liquid and gaseous waste control systems take advantage of natural dispersal of radioactive materials in order to minimize average off-site concentrations and thus reduce consequent annual dose. In the case of liquid wastes within the plant, the concentrations are of the order of 10^{-3} to 10^{-4} μc/cc. Waste of this concentration, subsequent to sampling and analysis, is metered to the water in the discharge canal to obtain further dilution to less than 10^{-7} μc/cc. This waste stream is diluted even further by the river water. This process results in efficient dispersion, and prevents accumulation of dose-contributing wastes off-site.

Similarly, natural dispersion of gases into the atmosphere is achieved in an efficient manner by discharge through the stack. The stack design height of 310 feet, the effluent exit velocity from the stack of approximately 50 ft/sec, and the buoyancy of the exit gases, promote favorable plume behavior for efficient dispersal. The design features of the stack assure that diffusion of the plume from the stack will not be significantly influenced by the eddy currents around the plant structures.

5.3 Mobility of Stored Wastes

The radwaste building arrangement and the methods of waste processing provide a high degree of retention of wastes within the plant. These arrangements are provided to assure that in the event of a failure of the liquid waste systems, or errors in operation of the system, the potential for inadvertent release of liquids is small. For example, the storage tanks, demineralizers, filters, and other equipment within the waste disposal building are contained within cells so that leakage is contained within the building. The waste sample tanks and the drain sample tanks are located on a concrete pad outside the building. The pad is provided with a retention curb to confine the contents of a tank if it should fail or leak. A drain leads from the pad to the discharge canal. The tanks contain wastes at a concentration of 10^{-3} to 10^{-5} μc/cc. If a tank were to fail and the waste discharged to the canal, the concentration of wastes in the canal would be less than 10^{-7} μc/cc.

Immobility of wastes is further accomplished by collecting solids on filters, in the centrifuge, or in the waste concentrators. The concentrated waste is subsequently mixed with a water absorbent material and placed in steel drums in temporary storage to provide the desired immobility.

In the off-gas system, an isolation valve is provided in the holdup line between the stack and the off-gas filter. Under off-standard conditions this valve is closed automatically to prevent discharge of gases to the stack.

VII. PLANT ELECTRICAL SYSTEM

VII PLANT ELECTRICAL SYSTEM

1.0 TRANSMISSION SYSTEM

(Different from Unit 2)

The electrical output of Unit 3 will feed into the Commonwealth Edison 345 kv network through five 345 kv circuits. Two of the 345 kv circuits will leave the Dresden bus on double-circuited towers in a southerly direction for a distance of approximately one mile, then turning east for a distance of 2-3/4 miles and then in a northeasterly direction to Goodings Grove Transmission Substation.

Two of the 345 kv circuits will leave the Dresden bus on double-circuited towers in a westerly direction for a distance of one mile, then turning north to Electric Junction Transmission Substation.

One of the 345 kv circuits will leave the Dresden bus on single-circuited towers in a southwesterly direction to Pontiac-Midpoint Transmission Substation.

The primary feature of the electric power system serving Dresden Station is the diversity of dependable power sources, physically isolated so that any one instrument of failure affecting one source of supply will not communicate to alternate sources, thus assuring a continuous source of auxiliary power to Unit 3. Auxiliary power can be supplied from four separate and independent sources: Units 2 and 3, the 345 kv transmission system, and a standby diesel generator system.

The auxiliary power supply from the 345 kv transmission system is protected against the effect of unplanned outages by the diversity of five separate 345 kv circuits and a major generating unit feeding into the 345 kv switch yard at the Dresden site. Any one of these 345 kv circuits has sufficient capacity to furnish all of the auxiliary requirements of Unit 3.

The normal auxiliary power supply for Dresden Unit 3 is split between the unit auxiliary power transformer which is connected to the generator leads and the reserve auxiliary power transformer which is connected to the 345 kv bus at Dresden as shown in Figure 46.

There will be no transformer between the 345 and 138 kv buses at Dresden. There will be transformers between the 345 and 138 kv systems at Electric Junction, Lombard, and Goodings Grove, as shown in Figure 46. The 138 kv lines from Dresden tie into this system, but these ties are made through other stations. It will be impossible for the failure of any one component of either the 138 or 345 kv transmission systems to cause a simultaneous outage of both buses at Dresden.

2.0 AUXILIARY POWER SYSTEM

The basic function of the auxiliary electrical power system is to provide power for startup, operation and shutdown, and to provide highly reliable power sources for elements of the station which are important to its safety.

2.1 Performance Objectives

(Same as Unit 2 PDAR as amended)

The auxiliary power system shall provide adequate power to operate all the station auxiliary loads necessary for operation of the unit. The power sources for the station auxiliary power supply are sufficient in number and of such electrical and physical independence that no single probable event could interrupt all auxiliary power at one time.

The station auxiliary bus is connected by appropriate switching sequences to a standby diesel generator or to an alternate source of auxiliary power. In the event of loss of normal auxiliary power sources, back-up auxiliary power shall be supplied from a standby diesel generator located on the site. The standby power source shall be physically independent of any normal power system. Each power source, up to the point of its connection to the auxiliary power bus, shall be capable of complete and rapid electrical isolation from any other sources.

Plant layout shall effect physical separation of bus sections, switchgear, interconnections, feeders, power centers, motor control centers, and other system components.

Loads important to plant safety shall be split and diversified between switchgear sections and means shall be provided for rapid location and isolation of system faults. Loss of auxiliary power causes the reactor to scram and the plant to shut down.

A station battery shall be provided as a final source of power for specific vital loads.

2.2 Bases

(Same as Unit 2 PDAR as amended)

Startup power must come from outside sources. A high degree of reliability in the auxiliary power system contributes to a good record of continuity of operation which in turn contributes to safety due to minimizing transient stresses on the electrical systems.

Loss of normal auxiliary power is foreseen and planned for and is in no way unsafe. The multiplicity of lines feeding the auxiliary buses, the redundancy of transformers and buses within the plant, and the divisions of critical loads between buses, result in a system that has a high degree of reliability and integrity. Also, physical separation of buses and service components are designed to limit or localize the consequences of electrical faults or mechanical accidents occurring at any point in the system.

If the auxiliary power is not restored momentarily after reactor scram, the standby diesel generator is designed to start and carry the vital loads for an indefinite period. The buses are so arranged that the vital shutdown loads are easily transferred to the standby diesel generator.

2.3 Description of the Auxiliary Electrical System

(Different from Unit 2)

A diagram of the principal elements of the auxiliary electrical system is shown in Figure 43 and the equipment listings are shown in Figure 44. Normal auxiliary power is provided by both the unit

auxiliary power transformer connected to the unit generator leads isolated phase bus and the reserve auxiliary power transformer connected to the 345 kv bus at Dresden as shown in Figure 46. The auxiliary loads are split between the auxiliary power transformers. However, each has the capacity to carry the full auxiliary load. The auxiliary transformers step down the voltage to 4160 volts to supply the 4160 volt auxiliary buses.

In the event the 345 kv switchyard and the unit generator were incapacitated, the standby diesel generator provides still one other independent source of auxiliary power. The standby diesel generator has capacity for operation of all systems required to shutdown the unit and maintain it in a safe shutdown condition.

The auxiliary buses are in six separate sections. Buses 1 and 2 provide power to the feedwater pumps and the reactor recirculating pumps. Buses 3, 4, 5, and 6 supply power to all other plant services. The general design requirement is to supply duplicate services from different buses. Failure of any one bus will still permit the station to operate at reduced output.

Power is supplied from the 4160 volt buses 3, 4, 5, and 6 to the four 480 volt buses through four separate transformers. The 480 volt buses supply power to the medium and electrically operated auxiliaries. The 480 volt buses are of the indoor load center type, which in addition to supplying directly to the 480 volt motor loads, also supplies the transformers used in stepping down the voltage to 120/208 volts for lighting, instrumentation and small plant service loads of 100 hp or less. The equipment vital to safe plant shutdown under accident conditions are also supplied by these buses.

The standby diesel generator is connected into the 4160 volt bus system in order to supply the power to the loads shown in Figures 43 and 44.

The switchgear for the 4160 volt bus is metal-clad indoor type. Circuit breakers are electrically operated from a 125-volt direct current, stored energy mechanism, with a three-pole air circuit breaker.

Transformers and switchgear for the 480 volt buses are located in the turbine building. Switchgear for each load center is in self-supporting metal clad sections with continuous main buses having draw out units which are replaceable under live bus conditions. Circuit breakers are electrically operated from the 125 volt station battery.

3.0 STANDBY DIESEL GENERATOR SYSTEM

3.1 Performance Objectives

Provision shall be made for supplying a source of electrical power which is self-contained within the plant and not dependent on normal sources of supply. The standby diesel generator system shall produce a-c power at a voltage and frequency compatible with normal bus requirements. The system shall be connected electrically to serve both Unit 2 and 3 and shall have capacity for operation of required engineered safeguard and other auxiliaries for one reactor under assumed accident conditions plus operation of necessary cooling equipment in the second reactor to accomplish and maintain a safe shutdown. In addition, the system shall be of sufficient capacity to start all inertial loads it is expected to drive.

The standby diesel generator system shall be designed to start automatically and accept full load within 30 seconds upon loss of all normal sources of power. It shall also be provided with manual start control. Power to start the diesel generator shall be self-contained and shall not be dependent on the availability of any other source of normal plant power at the moment of starting.

The fuel supply for the standby diesel generator system shall be contained in two tanks, one of which shall have adequate capacity for more than 4 hours of operation at rated load. The other tank shall have a capacity adequate to sustain system operation pending normal commercial deliveries of fuel. The diesel generator shall use a fuel which is readily available.

The diesel generator system shall be capable of either synchronous or independent operation.

The diesel generator shall be equipped with means for starting periodically to test for readiness and for synchronizing with the normal auxiliary power system without interrupting the service of the plant.

3.2 Description of Standby Diesel Generator System

Three diesel generators will be provided to supply power to the 4160 volt load centers for Units 2 and and 3. Each of the three diesels is sized so that any one can handle the engineered safeguard power requirements on one unit within the two hour overload rating of the diesel, and also handle the loads necessary for safe shutdown of the other unit.

The standby diesel generator capacity is determined by the power requirements of the essential emergency load. The starting load requirement for the largest motor is a factor considered in sizing the diesel generator. Each diesel generator will be capable of starting and carrying the largest essential emergency loads required under postulated accident conditions. The diesel generator may be manually loaded to its rated capacity at the discretion of the operator. Alarms will be provided which will annunciate an overloaded condition; however, the generator load will not trip when the generator becomes overloaded. The fuel oil tanks will be sized to provide more than three days operations at rated load.

The loads supplied by the standby diesel generator system are grouped into two main categories as follows:

1. Loads which start automatically upon restoration of normal bus voltage supplied by the diesel generator system or the normal station service, as required under postulated accident conditions.

2. Loads required for safe shutdown conditions, which are started either automatically or manually within the capacity of the diesel generator system.

The first and second categories loads will be connected on the 4160 volt buses with their associated 480 buses. Other loads may be connected by the station operators through normally open, manually operated breakers. This arrangement reduces connected loads to a practical minimum without eliminating the ability to select alternate loads.

The following table indicates examples of loads under the two categories connected to the diesel-generator system:

LOADS RESTARTING (OR STARTING) AUTOMATICALLY (CATEGORY 1) AS REQUIRED

1. One Core Spray Pump
2. Three Low Pressure Coolant Injection Pumps
3. Standby Gas Treatment Equipment
4. A-C Powered Operated Valves Required for Emergency Conditions
5. Emergency A-C Lighting

SHUTDOWN LOADS NECESSARY FOR MAINTENANCE OF SAFE SHUTDOWN CONDITIONS (CATEGORY 2)

1. Standby Liquid Control Pump
2. Drywell Cooling Blowers
3. Reactor Building Cooling Water System
4. Service Water System (that portion connected to the reactor building cooling water)
5. Emergency A-C Lighting
6. Instrument Air Compressor
7. Fuel Pool Cooling System
8. Battery Charger
9. Condensate Transfer Pump
10. Motor Operated Valves as Required
11. Instrumentation and Control Motor-Generator
12. Containment Service Water Pumps

OTHER CONNECTED LOADS

In addition to supplying the loads listed above, the diesel-generator system will be available, on a manual basis, to feed other loads including essentially all of the equipment on buses 3, 4, 5, and 6 of the 4160 volt system and lower voltage systems connected to the 4160 volt systems. The connections of such other loads will be made with regard given to overload restrictions.

3.3 Bases and Design Evaluation

The primary basis for selecting a standby diesel-generator system is to provide a truly independent source of electric power. Actually, normal sources of power are very reliable and the probability of truly random coincident failures of all sources of power into the plant is very low. If the failures were truly random, standby power would probably not be necessary. However, all the external sources of power entering the plant are carried on overhead lines with a certain vulnerability to storms of wind, lightning, and ice. The standby diesel-generator system is provided to guard against the contingency of the concurrent forced outage of all normal sources of power. As a consequence, it is imperative that the standby diesel-generator system not be influenced by the same environments that affect the normal sources of power. For these reasons, the standby diesel-generator starting capability is completely self-sustained and, aside from fuel, no outside power source is required for it to start.

Two of the standby diesel-generators are housed in a reinforced concrete block cell in the turbine building, the third diesel-generator is in a concrete vault next to the reactor building. Equipment connecting the standby diesel-generators to the auxiliary equipment consists of metal enclosed switchgear and underground cable with no exposed terminals. The location of the standby diesel-generators within the concrete structures, provision of the metal switchgear, and underground cable assures protection against damage from tornadic winds.

The combined capacity of the diesel generator system will be established to determination of required loads and load sequences.

Upon the occurrence of the failure of a normal power source, the following events will automatically take place in the order indicated:

(1) Simultaneously (a) the standby diesel-generator sets will be started, (b) the normal power source breakers at the essential switchgear open and (c) all 4160 volt feeder breakers on the essential buses open, except for the feeds to the 480 volt load substations.

(2) Breakers controlling power from the standby diesel-generators close to reestablish bus voltage when the standby diesel-generators develop proper frequency and voltage.

(3) Essential auxiliaries are then energized, either automatically or manually from the control room in a sequence as called for by the design criteria depending on the requirements, as determined by the system and the station operators.

Components to be used for this system include: General Electric Type IAV relays for the detection of bus under-voltage; General Electric Type HFA, HGA and HEA auxiliary relays for necessary multiplication of contacts to achieve simultaneous functions; General Electric Type CR2820 motor-driven timing relays and General Electric Type SB-1 or SBM control switches. These electrical devices will be of the heavy duty industrial type, conservatively rated and applied, and with which there have been many years of excellent operating experience. All control power will come from the 125 volt D-C system supplied from the station battery.

The control circuitry is designed to provide certain automatic features as described above and also allow the operators to take other appropriate action as may be required by the circumstances. The occurrence of automatic functions will be adequately displayed in the control room so that the operators can

observe that proper conditions have been established. For instance, should one of the 4.16 kv buses fail to be energized after loss of the normal power source, the operator has available in the control room the necessary manual controls to operate the appropriate circuit breakers.

3.4 Surveillance and Testing

Since the diesel-generators will be utilized as standby units, readiness is of prime importance. Readiness can best be demonstrated by periodic testing, which insofar as practical, simulates actual emergency conditions. The testing program will be designed to attest to the ability to start the system as well as to run under load for a period of time long enough to bring all components of the system into equilibrium conditions to assure that cooling and lubrication are adequate for extended periods of operation. Full functional tests of the automatic circuitry will be conducted on a periodic basis to demonstrate proper operation.

4.0 STATION BATTERY (125 VOLT D-C SYSTEM)

4.1 Performance Objectives

(Same as Unit 2 PDAR as amended)

The station battery shall be sized with a capacity suitable to supply emergency power for a time deemed adequate to safeguard the plant while normal sources of power are restored. The battery chargers shall be sized with a capacity suitable for restoring the battery to full charge under normal (not emergency) load in a time commensurate with the recommendations of the battery manufacturer.

The battery chargers shall be capable of supplying certain vital loads for a period of 8 hours even though the charger is not connected to the battery. The chargers shall be powered from separate a-c buses. These buses shall be arranged so that they can be connected to any valid source of a-c power available in the plant, including the standby diesel generator.

The 125 volt system shall be arranged so that more than one failure is required before normal plant needs are not served.

4.2 Bases

(Same as Unit 2 PDAR as amended)

Batteries are used for controls vital to plant safety and to power those functions required for shutdown, such as closing of isolation valves, operating valves in the isolation condenser system, providing minimum required lighting and providing minimum instrumentation such as control rod position indicators and a neutron channel to monitor the core during shutdown.

All of the loads connected to the 125 volt d-c system except the heavy duty loads can be supplied by either charger. The chargers can be powered from multiple sources of station auxiliary power including the standby diesel generator. Buses are arranged to allow for alternate paths to other systems throughout the plant where redundancy is employed. The aggregate system is so arranged and powered that the probability of system failure due to loss of 125 volt d-c power is very low. All of the systems either self-annunciate their failures or are amenable to periodic testing in service to discover faults.

Only the heavy duty loads require the capacity of the storage battery for their operation. The station battery has earned a reputation as the ultimate in single source reliability.

The battery is located in a ventilated battery room having concrete block walls. The battery system operates ungrounded with a ground detector alarm set to annunciate the first ground. Thus multiple grounds, the only reasonable mode of failure, are extremely unlikely. The normal mode of battery failure is a single cell deterioration which is signalled well in advance by the routine of tests which are performed regularly on the battery.

One of the heavy duty loads is the lube oil pump on the turbine-generator. Loss of the station battery would cause a loss of emergency lube oil, a contingency which is standard in the utility industry. Loss of the station battery plus the loss of the battery charger at the required time of need would prevent closure of the d-c motor driven isolation valves, but these are the back-up isolation valves and the probability of coincident failures preventing the a-c motor operated valve from closing also is considered to be very low.

4.3 Description of the Station Battery 125 Volt D-C System

(Conforming amendment of Unit 2 PDAR required where indicated by ‡)

The station battery is an integral part of the 125 volt d-c system which includes the battery chargers, breakers, buses, and other auxiliaries. The 125 volt d-c system is divided into three categories characterized by the nature of their loads as follows:

a. Continuous Control Bus

b. Interruptable Control Bus

c. Heavy Duty Bus

The continuous control bus shall be able to supply nominal 125 volt d-c power to vital control circuits without interruption so long as a valid source of 125 volt d-c power exists within the plant. The station battery or either of the two battery chargers may qualify as a valid source. Loss of this bus even momentarily would scram the reactor.

The interruptable control bus supplies loads which are vital but can withstand the momentary transient due to a transfer from one source to another. The station battery or either of the two battery chargers may qualify as a valid source. These loads are typically annunciators and circuit breaker switching power.

The heavy duty bus furnishes power to heavy loads which are connected only in an emergency condition. In general, these loads are motor loads such as back-up isolation valves and emergency lube oil pumps where the power source is the station battery.

The station battery will be sized to carry its required connected load for eight hours without recharging. The battery capacity is currently sized at approximately 912 ampere-hours. Not all requirements have yet been established, but some of the connected loads are listed as follows:

	Direct Connected Loads	Estimated Power Required
1.	Turbine emergency bearing oil pump	40 hp
2.	Turbine generator emergency seal oil pump	10 hp
‡ 3.	Standby gas treatment fan	15 hp
4.	Automatic and remote manual closing isolation valves and control valves actuated by signals from the reactor protection system	20 hp/10 min
5.	Turbine and generator control circuits	1 kw
6.	Breaker control circuits	60 amps/min

Direct Connected Loads (Continued)	Estimated Power Required
7. Fire protection circuits	1 kw
8. Diesel engine and generator controls	1 kw
9. Emergency d-c lighting	20 kw
10. Control rod position indicating system	2 kw
11. Selected station instrumentation and recorders	2 kw
12. Station annunciators and event recorders	3 kw
13. Paging communications and alarms	2 kw

4.4 Surveillance and Testing

(Same as Unit 2 PDAR as amended)

The station battery and other equipment associated with the 125 volt d-c system are easily accessible for inspection and testing. Service and testing will be accomplished on a routine basis in accordance with recommendations of the manufacturer. Typical inspections would include visual inspections for leaks and corrosion, and checking all batteries for voltage, specific gravity and level of electrolyte.

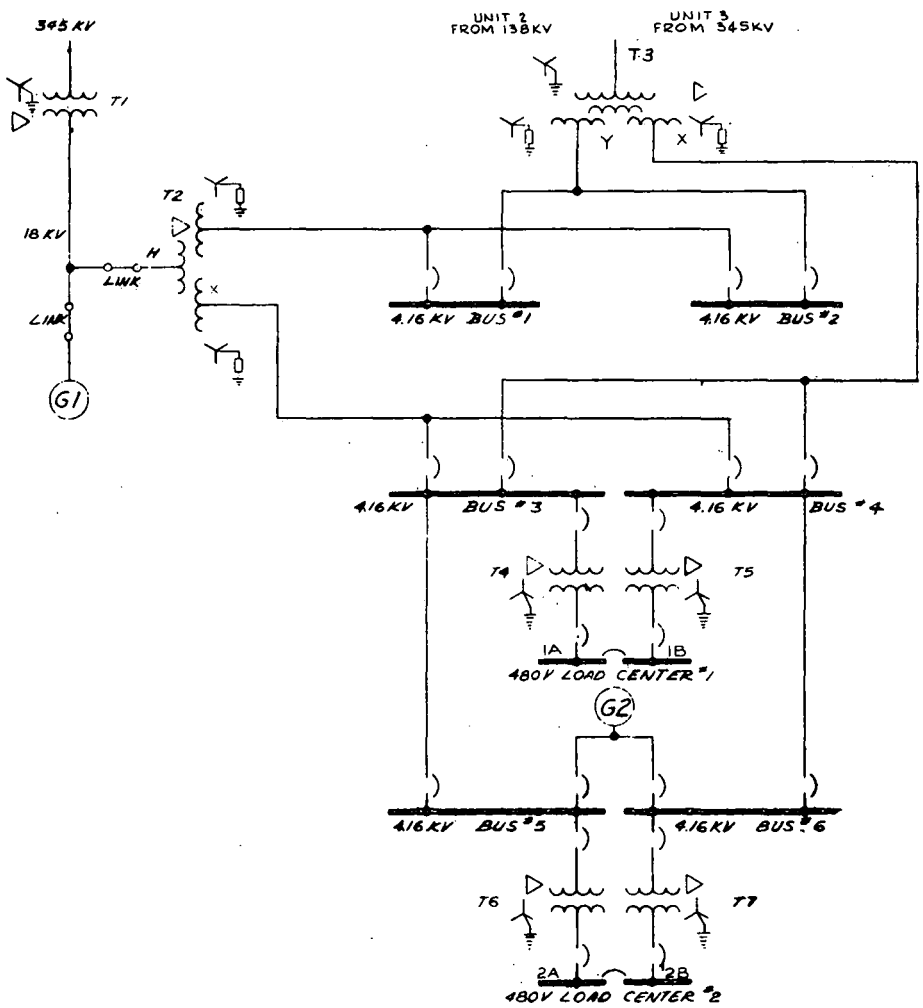

Figure 43. Plant Electrical System

EQUIPMENT DATA SHEET

TRANSFORMERS

T1 - Main - - - - - - - 850 MVA (55°), 17.1 - 345 KV, 1,050 KVBIL
3Ø, 60~, FOA, 55°/65° RISE

T2 - Unit Auxiliary Power - - 26.4/35.2/44 MVA, 17.1 - 4.16 - 4.16 KV,
150 KVBIL, 3Ø, 60~, OA/FA/FOA, 55° RISE
IMPEDANCE H-X = 20% MIN.
H-Y = 17% MIN.
X-Y = 40% MIN.
WINDING RATINGS:
H - 26.4/35.2/44 MVA
X - 10.2/13.6/17 MVA
Y - 16.2/21.6/27 MVA

T3 - Reserve Auxiliary Power 26.4/35.2/44 MVA, 138 - 4.16 - 4.16 KV
550 KVBIL, 3Ø, 60~, OA/FA/FOA, 55° RISE
IMPEDANCE H-X = 20% MIN.
H-Y = 17.0 MIN.
X-Y = 40% MIN.
WINDING RATINGS:
H - 26.4/35.2/44 MVA
X - 10.2/13.6/17 MVA
Y - 16.2/21.6/27 MVA

T4 - T5 - - - - - - - 1000 KVA, 4.16 KV - 480 V, 3Ø, 60~,
OIL AIRCOOLED, 55°C RISE
IMPEDANCE 5.75%

T6 - T7 - - - - - - - 750 KVA, 4.16 KV - 480 V, 3Ø, 60~,
OIL AIRCOOLED, 55° C RISE
IMPEDANCE 5.75%

GENERATORS

G1 920 MVA, .90 PF, 0.58 SCR, 18 KV
1800 RPM, 3Ø, 60~, 60PH2.

G2 DIESEL DRIVEN, 2500 KVA, 0.8PF, 4.16 KV,
3Ø, 60~.

CIRCUIT BREAKERS

4.16 KV BUSES 1 & 2
INCOMING 4 - AM 4.16 - 350, 3000 AMP.
FEEDERS 6 - AM 4.16 - 350, 1200 AMP.
4.16 KV BUSES 3 & 4
INCOMING 4 - AM 4.16 - 250, 2000 AMP.
FEEDERS 19 - AM 4.16 - 250, 1200 AMP.
4.16 KV BUSES 5 & 6
INCOMING 6 - AM 4.16 - 250, 1200 AMP.
FEEDERS 21 - AM 4.16 - 250, 1200 AMP.
480 VOLT LOAD CENTER #1
INCOMING 2 - AK-50
BUS TIE 1 - AK-50
FEEDERS 9 - AK-25
480 VOLT LOAD CENTER #2
INCOMING 2 - AK-50
BUS TIE 1 - AK-50
FEEDERS 7 - AK-25

BUS DUCT

MAIN GENERATOR LEADS - 1Ø-PHASE 33,000 AMP.

UNIT AND RESERVE SECONDARY FEEDERS
WINDING "X" TO SWITCHGEAR - NON-SEGREGATED, 5000 AMP.
WINDING "Y" TO SWITCHGEAR - NON-SEGREGATED, 4000 AMP.

EQUIPMENT DATA SHEET

ELECTRICAL BUS LOADS

4160 VOLT BUS #1
- 1 - REACTOR FEED PUMP 9000 HP EA
- 1 - REACTOR RECIRCULATING PUMP M-G SET 7000 HP EA
- 1 - FEEDER TO RESERVE REACTOR FEED PUMP #3 (9000)HP *

4160 VOLT BUS #2
- 1 - REACTOR FEED PUMP 9000 HP EA
- 1 - REACTOR RECIRCULATING PUMP M-G SET 7000 HP EA
- 1 - FEEDER TO RESERVE REACTOR FEED PUMP #3 (9000)HP *

4160 VOLT BUS #3
- 2 - CIRCULATING WATER PUMP 1750 HP EA
- 2 - CONDENSATE AND BOOSTER PUMP 1750 HP EA
- 1 - SERVICE WATER PUMP 1250 HP EA
- 2 - CONTAINMENT COOLING SERVICE WATER PUMP 700 HP EA
- 1 - CONTROL ROD DRIVE FEED PUMP 250 HP EA
- 1 - 480 VOLT LOAD CENTER

4160 VOLT BUS #4
- 1 - CIRCULATING WATER PUMP 1750 HP EA
- 2 - CONDENSATE AND BOOSTER PUMP 1750 HP EA
- 2 - SERVICE WATER PUMP 1250 HP EA
- 2 - CONTAINMENT COOLING SERVICE WATER PUMP 700 HP EA
- 1 - CONTROL ROD DRIVE FEED PUMP 250 HP EA
- 2 - 480 VOLT LOAD CENTER

4160 VOLT BUS #5
- 1 - CORE SPRAY PUMP 800 HP EA
- 2 - LOW PRESSURE COOLANT INJECTION PUMP 700 HP EA
- 2 - REACTOR SHUTDOWN COOLING PUMP 500 HP EA
- 1 - REACTOR BUILDING COOLING WATER PUMP 350 HP EA
- 1 - REACTOR CLEAN-UP RECIRCULATING PUMP 600 HP EA
- 1 - 480 VOLT LOAD CENTER

4160 VOLT BUS #6
- 1 - CORE SPRAY PUMP 800 HP EA
- 2 - LOW PRESSURE COOLANT INJECTION PUMP 700 HP EA
- 1 - REACTOR SHUTDOWN COOLING 500 HP EA
- 2 - REACTOR BUILDING COOLING WATER PUMP 350 HP
- 1 - REACTOR CLEAN-UP RECIRCULATING PUMP 600 HP EA
- 1 - 480 VOLT LOAD CENTER

480 VOLT LOAD CENTERS 1A & 1B
- 2 - SERVICE AIR COMPRESSORS @ 150 HP
- 1 - AUXILIARY CLEANUP DEMINERALIZER PUMP @ 200 HP
- 2 - SCREEN WASH PUMP @ 150 HP

4 - MOTOR CONTROL CENTERS

480 VOLT LOAD CENTERS 2A & 2B
- 2 - FUEL POOL COOLING PUMP @ 100 HP
- 3 - REACTOR BLDG. CLOSED COOLING WATER PUMP @ 200 HP

2 - MOTOR CONTROL CENTERS
- 2 - LIQUID POISON PUMP @ 40 HP
- 1 - LIQUID POISON HEATER TANK @ 75 KVA
- 1 - EMERGENCY GAS TREATMENT EQUIP @ 150 HP
- 5 - DRYWELL COOLING BLOWERS @ 20 HP
- 2 - EMERGENCY AC LIGHTING FEEDERS @ 50 KVA
- 1 - TURBINE TURNING GEAR MOTOR @
- 1 - PLANT INSTRUMENT POWER PANEL A *
- 1 - PLANT INSTRUMENT POWER PANEL B *

* BATTERY CHARGER INCLUDED IN LOADS CONNECTED TO PANEL.

* PUMP 3 IS A RESERVE WHICH MAY BE FED FROM EITHER BUS #1 OR BUS #2

Figure 44. Plant Electrical System

VIII. PROCESS, AREA AND HEALTH MONITORING

VIII. PROCESS, AREA AND HEALTH MONITORING

1.0 SCOPE

(Same as Unit 2 PDAR as amended).

The plant is provided with two types of plant radiation monitoring systems which are utilized to maintain continuous surveillance and monitoring of the radiation levels associated with plant operations. (1)

The first type consists of several process radiation monitoring systems which provide a continuous indication and record of radioactivity at or near the discharge point of those process lines that can release radioactive effluents to the environs directly. These monitors are capable of measuring the radioactive material content of such effluents to a sufficient degree of accuracy to show that maximum permissible release rates are not being exceeded. Provisions are also made for monitoring the various process systems of the unit in which radioactive fluids are normally contained or stored.

The second type is the area radiation monitoring system which provides operating personnel with a record of gamma radiation levels at selected locations within the various buildings. This system is designed to alarm locally and in the control room when radiation levels exceed predetermined values.

Similar process and area monitoring systems are being used for Dresden Unit 1 and are provided for use on the Nine Mile Point and the Oyster Creek nuclear power plants.

(1) In addition to these plant monitoring systems, there is also an environs monitoring program discussed in the Dresden Unit 2 Plant Design and Analysis Report, Volume III, Section 8.0.

2.0 PROCESS RADIATION MONITORING SYSTEMS

2.1 General Requirements of Process Radiation Monitoring Systems

(Same as Unit 2 PDAR as amended).

The monitoring systems which provide automatic protective signals, such as isolation valve closure or plant shutdown, are designed so that a single component failure does not prevent the required automatic action. All monitors are capable of self-supervision, i.e., give an alarm when downscale or de-energized. Alarms are provided to warn of a sampling system malfunction. All monitors are capable of convenient operational verification by means of test signals or portable radioactive sources.

All monitoring systems are provided with indicators located in the control room. As a general requirement, the various process monitors are provided to initiate appropriate alarms and actuation of equipment in order to assure containment of radioactive materials if pre-established limits are exceeded.

2.2 Air Ejector Off-Gas Monitoring System

(Same as Unit 2 PDAR as amended)

2.2.1 Performance Objectives

The air ejector off-gas monitoring system continuously monitors and records over a six decade minimum range the radioactivity of the effluent gases removed from the main condenser by the air-ejector system. Trip settings on the instrument alarm high radiation levels and initiate closure of the off-gas system isolation valve.

Means are provided for checking the sampling chamber background plateout and surface absorption errors that can not normally be eliminated. Such errors are reduced to a minimum by appropriate sample system design.

Provisions are made to allow approximately two minutes decay of N-16 and O-19 so they do not mask out the measurement of the longer half-life constituents.

2.2.2 Bases

The performance objectives are based on the need to obtain a continuous record of radioactivity released to the holdup system through the air ejector and to shut off the radioactive gas flow before the maximum permissible stack release rate is reached.

The radioactivity levels of N-16 and O-19 in the main steam lines are relatively high, but quickly decay due to the short half-lives of those isotopes. Therefore, in order to obtain a more accurate indication of the activity levels of radioisotopes which affect the gas discharge limits through the stack, the air ejector off-gas is monitored after a time delay.

2.2.3 Description

Noncondensible gases from the main condenser air ejector are monitored to determine the radioactivity level before entering the holdup line. Two channels of instrumentation are provided, each used as a backup for the other. The output of each channel is recorded continuously. The principal elements of the system are indicated on Figure 52.

If the radioactivity level of the off-gas reaches the established limit an alarm is sounded. Provisions are made for automatic closure of the isolation valve as required. Because of the average 30 minute holdup time provided in the air ejector off-gas line between the monitoring point and isolation valve, there is time available to evaluate the off-gas concentrations and to take necessary corrective action before making a decision to shut down the reactor.

Provisions similar to those installed on Unit 1 are made for collecting samples of air ejector off-gas for laboratory analysis.

2.3 Stack Gas Monitoring System

(Conforming amendment of Unit 2 PDAR required where indicated by‡).

2.3.1 Performance Objectives

The stack gas monitoring system continuously measures and records over a six decade minimum range the radioactivity of the effluent gases discharged from the stack.

2.3.2 Bases

‡ Since a single stack is being utilized for gaseous waste discharge for the combined operation of Unit 2 and Unit 3, only one monitoring and recording system for the stack is provided. The stack gas radioactivity level indication, recording and high level annunciation will be provided in each of the control rooms. Also, since the Units 2 and 3 common stack is separate from the Unit 1 stack, instrumentation is provided which totalizes the stack gas monitors from each stack to indicate the level of radioactivity being maintained between the three units. This instrumentation and the alarm signal for the system is located in all three control rooms. This arrangement permits integration of off-gas waste management for the Dresden station.

2.3.3 Description

The stack gas is monitored and the levels of radioactivity recorded to audit gaseous release. Two channels of instrumentation are provided. In addition, a gas pump draws a gas sample from the stack through filters to collect particulate and halogen samples. The filters are removed periodically for analysis.

2.4 Process Liquid Monitors

(Same as Unit 2 PDAR as amended).

2.4.1 Performance Objectives

The process liquid monitors measure and record the concentration levels of discharge and provide alarms before concentrations exceed the maximum set forth in 10 CFR 20.

2.4.2 Bases

The control of the concentration of liquid wastes which are discharged to the river is achieved through a knowledge of the concentration of radioactive materials in the various process waste streams.

2.4.3 Description

The following liquid streams are monitored continuously and the concentrations of radioactive materials are recorded:

a. Radioactive waste discharge to the canal

b. Closed cooling water system

c. Service water system discharge from reactor building and waste disposal plant

Alarms are provided to alert operating personnel in the event of variation from normal.

The operation of this monitoring system is described in Section VI-2-3.

2.5 Steam Line Radiation Monitoring

(Same as Unit 2 PDAR as amended).

2.5.1 Performance Objective

The design provides for continuous monitoring of the steam lines which permits the prompt indication of gross release of fission products from fuel to the reactor coolant.

The monitoring system is capable of automatically initiating reactor shutdown and closure of appropriate isolation valves if activity levels in the steam lines indicate that action is required.

2.5.2 Bases

During normal operation with no fuel imperfections, the activity in the steam lines is due principally to activation gases. If gross fuel failures occur, the immediate increase of radiation levels in the steam lines is detected, and the reactor isolated well in advance of the time required for the passage of the gases through the holdup system.

2.5.3 Description

The monitoring system includes four sensor systems each consisting of a gamma sensitive ion chamber and a six decade log radiation amplifier. The detection point is immediately downstream of the outer isolation valve at the drywell penetration. A reading 10 times normal provides an alarm in the control room. A high reading of approximately 100 times normal initiates reactor scram, isolation of the drywell, and closure of the off-gas stop valves upstream of the holdup pipe and at the stack inlet.

2.6 Other Gas Process Radiation Monitoring

(Same as Unit 2 PDAR as amended).

2.6.1 Performance Objective

The design provides for continuous monitoring of the reactor building ventilation discharge duct and the isolation condenser vents so that above normal levels of radiation in the ducts and vents will be detected and action initiated to isolate the reactor building ventilation discharge and place the Standby Gas Treatment System in operation.

2.6.2 Bases

Under normal operating circumstances the reactor building air contains only minute, nondetectable quantities of radioactive materials so that the air is exhausted through vent ducts. It will be necessary to utilize the Standby Gas Treatment System (described in Section V-4.3) only in those circumstances wherein the ventilation exhaust contains detectable amounts of radioactive materials.

Similarly, the vent from the isolation condenser is normally void of detectable amounts of radioactive materials. If it ever were necessary to utilize the isolation condenser system, this condition would still prevail, since the condenser tubes and piping form a continuous loop to and from the reactor, and radioactive materials do not enter the water in the condenser.

2.6.3 Description

Monitoring of the gross gamma type is provided for the reactor building ventilation exhaust and the isolation condenser vent. These dual monitoring systems have reliability compatible with automatic containment closure requirement, i.e., capable of automatic action regardless of a single component or a single power failure and are self supervising. The monitoring systems provide alarms and automatic trip signals, and cover a range of three decades minimum.

3.0 AREA MONITORING SYSTEM

(Confirming amendment of Unit 2 PDAR required where indicated by ‡).

3.1 Performance Objectives

The area monitoring system provides operating personnel with a convenient record of gamma radiation levels at selected detector locations within the various plant buildings. All monitors provide alarms in the control room when radiation levels exceed predetermined values or when downscale or deenergized. Some monitors provide local alarms as well.

3.2 Bases

The objectives outlined are based on the desirability and/or necessity of detecting and maintaining a record of gamma radiation levels in the vicinity of equipment normally handling radioactive or potentially radioactive materials in order that any significant change in radioactivity levels are brought to the operator's attention.

3.3 Description

Area radiation monitor detectors are placed to specially monitor the following locations. Other locations may be selected on a basis of need to know radiation levels on a continuous or trend basis. Where
‡ monitors are located in areas which are common to both Units 2 and 3, radiation levels will be indicated
‡ and recorded in the control room of each unit.

Location

1. Fuel pool area
2. Reactor head area
3. Cleanup system area
4. Reactor building equipment drain pump area
5. Regeneration room
6. Radwaste pump room
7. Main condenser area
8. Condensate demineralizer area
9. Feed pump area entrance
10. Turbine operating floor entrance
11. Turbine lube oil equipment area
12. Makeup room

13. Air compressor and diesel area
14. Traveling in-core probe drive area
15. Personnel lock area
16. Radwaste control room
17. Control room
18. Locker room and laundry
19. Access control room
20. Entrance to turbine building
‡ 21. New fuel storage vault
‡ 22. Maintenance shop

4.0 PERSONNEL MONITORING INSTRUMENTATION

(Same as Unit 2 PDAR as amended).

Portable monitoring instruments provide for all necessary radiation survey, air sampling and personnel monitoring. The survey instruments include those necessary to measure alpha, beta, gamma and neutron radiation levels encountered during operation. Quantities and range of such instruments are commensurate with the service requirements based on plant layout, staffing and normal maintenance. Special survey instruments are provided for gamma measurements up to 10,000 r/hr.

The air sampling systems provide particulate collection devices which can be moved to selected locations and collect samples which can be removed for counting in a counting chamber provided for this purpose.

Rechargable gamma and neutron dosimeters, film badges, alpha, beta, and gamma check sources, charger-reader for dosimeters and hand and foot counters are provided for personnel monitoring.

5.0 SURVEILLANCE AND TESTING

(Same as Unit 2 PDAR as amended).

The design of the instrumentation systems permits testing, maintenance, repair and calibration of individual components without interrupting the functional requirements of the systems. For example, most monitored points which are connected into the reactor protection system are provided with four individual monitors. Each of two monitors are placed in both channels of the protection system. One monitor for each channel may be removed from service without interrupting plant operation and without sacrificing the monitoring function.

Individual monitors can be calibrated using a standard calibration source. Also the continuity and operability of any monitoring system can be tested at any time without interrupting plant operations as noted above.

IX. OTHER PLANT FEATURES

IX. OTHER PLANT FEATURES

1.0 FUEL STORAGE AND FUEL HANDLING

(Conforming amendment of Unit 2 PDAR required where indicated by ‡)

1.1 New Fuel Handling and Storage

‡ New fuel is brought into the reactor building through the equipment entrance. A rail crane is provided in the equipment access area for removal of new fuel from trucks and for movement of the multi-assembly transfer basket. The new fuel is hoisted to the upper floor for storage utilizing the reactor building crane. The new fuel dry storage vault is used in common for Unit 2 and 3 fuel. The storage racks in the vault are full length, top entry, and designed to prevent an accidental critical array, even in the event the vault becomes flooded. Vault drainage is provided to prevent possible water collection. All entrances to the vault, including hatches and personnel openings, are capable of being locked.

1.2 Spent Fuel Handling and Storage

The handling of spent fuel is performed within the reactor building. This employs a refueling platform for underwater fuel transport, storage racks for fuel and control rods in a storage pool, underwater fuel preparation stations, floor mounted jib cranes and space for a spent fuel shipping cask. Fuel and control rods transferred from the core will be stored in the fuel pool racks. Fuel channels are removed from the fuel assemblies in the pool and, after a specified decay period, the fuel assemblies are loaded into casks for shipment.

‡ The storage pool will hold, in addition to the 1-3/5 core load of fuel assemblies; control rods, temporary control curtains, and small reactor vessel components in the event of a complete core unloading. Additional storage for large components, such as steam dryer and separator, is provided in a separate storage pool adjacent to the drywell head cavity. The pool system contains provisions to maintain water cleanliness. Instrumentation is provided to monitor water level. Makeup water is available from the demineralized water system. Water depth in the pool will be such as to provide sufficient shielding for occupancy of operating personnel. The rack in which fuel assemblies are placed is designed and arranged to ensure subcriticality in the pool. Underwater vacuum-cleaning equipment is available for removal of dirt and small particles.

The fuel storage pool will be adequately designed to withstand the anticipated earthquake loadings as a Class I structure. It is a reinforced concrete structure, completely lined with seam welded stainless steel plates welded to reinforcing members (channels, I-beams, etc.) embedded in concrete. The lower liner section will be built as a free standing structure and hydrostatically tested prior to the concrete pour. The stainless steel liner will prevent leakage even in the unlikely event the concrete develops cracks. To avoid unintentional draining of the pool, there are no penetrations that would permit the pool to be drained below a safe storage level, and all lines extending below this level are equipped with suitable valving to prevent backflow. The passage between the fuel storage pool and the refueling cavity above the reactor vessel is provided with two double sealed gates with a monitored drain between the gates. This arrangement permits detection of leaks from the passage and repair of a gate in the event of such leakage. A liquid level switch monitoring pool water level is provided to detect loss of water and permit refilling of the pool from the condensate storage system. In addition, a second level switch in the pool surge tank is provided to permit almost instantaneous water loss detection.

2.0 TURBINE PLANT SYSTEM

(Conforming amendment of Unit 2 PDAR required where indicated by ‡)

2.1 Turbine Generator Unit

‡ The turbine is a 810,000 kw, 1800 rpm, tandem-compound six flow nonreheat steam turbine with 38 inch last-stage buckets designed for steam conditions of 950 psig saturated with 0.28% moisture, 1.5 inches mercury absolute exhaust pressure and 0.5% make up while extracting for four stages of feedwater heating.

The generator is a direct driven, 60 cycle, 18,000 v, 1800 rpm conductor-cooled, synchronous generator rated at 920,350 kva at 0.9 power factor, at 60 psi hydrogen pressure and 0.58 SCR. The generator exciter system is of the Alterrex type rated at 2435 kva, 400 v. In addition, standard turbine and generator accessories are included. The turbine includes one double-flow, high pressure and three double-flow, low pressure elements. Exhaust steam from the high pressure turbine passes through centrifugal moisture separators before entering the three low pressure units. The separators reduce the moisture content of the steam to less than 1 percent by weight. This turbine does not utilize reheat features.

The turbine controls include a speed governor, an overspeed governor, steam admission valves, emergency stop valves, and a pair of initial pressure regulators.

The ability of the plant to follow system load is accomplished by adjusting the reactor power level, either by regulating the reactor recirculating flow or by moving control rods. However, the turbine speed governor can override the initial pressure regulator, and the steam admission valves close when an increase in system frequency or a loss of generator load causes the speed of the turbine to increase. In the event that the reactor is delivering more steam than the admission valves will pass, the excess steam is bypassed directly to the main condenser by automatic pressure-controlled bypass valves. In addition other standard protective devices are included.

2.2 Turbine Condenser

The turbine condenser is of divided water flow, single pass, multi-pressure type with back washing features for each half of the condenser. The use of a multi-pressure condenser is practical whenever the steam turbine has two or more balanced, low pressure exhaust openings. The multi-pressure condenser offers the following possible advantages:

a. Improved turbine performance with increased kw output or a lower plant heat rate using same condenser surface area and flow rate.

b. Reductions in the circulating water requirements and resultant pumping power.

c. Improved deaeration.

The condensate hotwell is designed for sufficient retention time to eliminate the need for shielding of the condensate pumps. The condenser is designed for three exhaust pressures which results in performance comparable to an average exhaust pressure of 1-1/2 inches of mercury absolute with 60 F cooling water.

The condenser is designed to accept by-pass steam up to 40% of throttle steam flow.

Condenser water boxes are of fabricated steel construction.

The condenser shell is protected by relief diaphragms on the turbine exhaust casing in the event of a failure of the turbine by-pass valves to close on loss of condenser vacuum.

2.3 Turbine Bypass Valves

Reactor vessel overpressure protection is provided by the turbine bypass system as well as the isolation condenser system. The turbine bypass valves discharge reactor steam directly to the main condensers. They are used during plant startup and shutdown to regulate the steam pressure in the reactor vessel, and are designed to pass up to 40% of throttle steam flow. The capacity of the bypass valves and relief valves is sufficient to keep the reactor safety valves from opening in the event of a sudden loss of full load on the turbine generator.

The valves are automatically controlled by reactor pressure. Two independent pressure regulators are provided -- one acting as a standby unit. The set point of the pressure regulators is adjusted manually from the control room.

2.4 Steam Jet Air Ejectors

A pair of two-stage, steam jet air ejector units with combined inner-condenser and after-condenser are provided for evacuating noncondensable gases while the turbine unit is in operation. Each unit is capable of removing the total volume of gas produced in the reactor and also air in-leakage into the condensing system.

The air ejectors discharge through an oversized pipe which provides a 30 minute holdup time. Particulate filters are provided in the system before the discharge of the gases to the 310 foot stack.

2.5 Vacuum Pumps

A mechanical vacuum pump system is provided to produce a vacuum in the condenser prior to starting the turbine when no steam is available to operate the steam jet air ejectors. The gases from the turbine and condenser systems are discharged from the pumps to the 310 foot stack via the gland seal exhaust piping system.

2.6 Circulating Water System

Three vertical, drypit, centrifugal, removable element, circulating water pumps deliver water to the condenser water boxes. Each pump suction pit is sectionalized to permit dewatering of one pit for maintenance while the remaining pumps are in operation. In addition each pump is provided with a shutoff valve at its discharge.

Equipment is provided to add sodium hypochlorite solution to the intake bays of both Units 2 and 3 to minimize marine growth in the circulating water system.

Ahead of each circulating water pump there are traveling screens for removal of debris. Ahead of the traveling screens is a bar grille trash rack with a rake for periodic removal of debris.

2.7 Condensate Pumps

Centrifugal, motor driven condensate pumps take suction from the condenser hotwells and discharge through the steam jet air ejector condensers and the gland steam condensers to the full-flow condensate ‡ demineralizer system. The condensate from the demineralizers flows to the condensate booster pumps and then to three parallel strings of feed-water heaters.

2.8 Condensate Demineralizer System

The full-flow condensate demineralizer system ensures the supply of water of required purity to the reactor. This demineralizer system removes corrosion products from the turbine, condenser, and the feedwater heaters, protects the reactor against condenser tube leaks, and removes condensate impurities which might enter the system in the makeup water.

The condensate demineralizer system consists of a number of mixed-bed units (including one spare) sized for rated load condensate flow, cation regeneration tank, anion regeneration tank, resin storage tank, recycle pump, and required piping, valving, panel instrumentation and controls.

The demineralizer tanks are of the rubber-lined, carbon steel type, and are sized for an operating flow rate of 50 gpm per square foot of cross sectioned area.

Exhausted resins are sluiced from a demineralizer unit to the resin separation tank. The resins are then hydraulically classified and separated, followed by removal of the lower density anion resin to the anion regeneration tank. The primary resin separation tank is then used for subsequent backwashing regeneration of the cation resin. The resins are separately backwashed to removed insoluble material. After rinsing, the regenerated resins are sluiced to the resin storage tank for reuse. Remixing of the resins is done in the storage tank.

Any radioactive material removed from the exhausted resins by the rinse solutions is transferred to the radioactive waste system for analysis and treatment as required. Wastes from the regeneration procedure are segregated on the basis of conductivity. Low conductivity water is diverted to the waste collector tank, and high conductivity water is routed to the waste neutralizer tank.

The condensate demineralizer and associated regeneration systems are manually controlled from a local panel. Integrated flow and conductivity monitors are provided for each demineralizer to indicate when regeneration or back-wash is required. Suitable alarms and pressure drop recorders are provided in the main control room.

Main flow valves are manually operated. Resin transfer from the demineralizing tanks to the resin separation tank, and from the resin storage tank to the empty demineralizing tank, is manually initiated and manually stopped. Backwash, separation, chemical regeneration and rinsing of the resins, the transportation of chemically regenerated resins to the resin storage tank, and resin mixing are automatically controlled.

The demineralizer vessels and regeneration tanks are located in a shielded area. Valves, pumps and instrumentation are excluded from this area but are located nearby. Piping carrying condensate or demineralized condensate does not require shielding.

2.9 Feedwater Pumps

Three one-half capacity horizontal reactor feed pumps with motor drives are supplied. The pumps discharge through regulating valves which provide feedwater control. Minimum flow is obtained by recirculation to the condenser. Pump suction pressure is maintained by the condensate booster pumps, which discharge uncontrolled against the feedpumps.

2.10 Feedwater Heaters

Feedwater flow is divided into three parallel strings. There are three low-pressure feedwater heaters and one high-pressure feedwater heater in each string. Separate drain coolers are provided for each of the "A" heaters, while the other heaters have integral drain coolers.

Separation of water in the extraction steam is accomplished in the heaters rather than in external separators. All drains flow by pressure differential from the heater through the drain cooler to the next lower pressure heater.

All heaters have stainless steel tubes welded to the tube sheets. Stainless steel baffles are provided at entering steam and drain connections.

Valving permits bypass of each string of low-pressure heaters in the event of failure of any component in the string. Any of the three high-pressure heaters can be similarly bypassed.

3.0 REACTOR AUXILIARY SYSTEMS

(Same as Unit 2 PDAR as amended)

3.1 Reactor Cleanup Demineralizer System

The purpose of the reactor cleanup demineralizer system is to maintain high reactor water purity in order to:

a. Reduce the deposition of water impurities on the fuel surface and thus minimize any effect on heat transfer.

b. Reduce the secondary sources of beta and gamma radiation resulting from the deposition of corrosion products and impurities in the primary system.

The cleanup system provides a continuous purification of a portion of the recirculation flow with a minimum of heat loss and water loss from the cycle. It can be operated during startup, shutdown, and refueling operations, as well as during normal operations.

Water is normally removed under reactor pressure and cooled in a regenerative heat exchanger and a non-regenerative heat exchanger, reduced in pressure, filtered, demineralized, and pumped through the shell side of the regenerative heat exchanger to the reactor. Whenever reactor pressure is insufficient to maintain cleanup system recirculation pump suction pressure, the auxiliary pump is used.

The cleanup filters are pressure precoat type, using a nonsilicious filter aid. Two full-size filters are provided to permit continuous operation with one filter being on a standby condition. Three 1/3 capacity mixed bed cleanup demineralizers are provided. The design capacity of the demineralizers enables the system to continue full flow operation on two units while one demineralizer is temporarily out of service. Spent cleanup resins are not regenerated because of the radioactivity of the impurities removed from the reactor coolant, but are sluiced from the demineralizer vessels directly to the radwaste system for disposal.

A Y-type post-strainer is provided on the outlet of each demineralizer to prevent resins from entering the reactor system in the event of a resin support failure. Each strainer is designed to withstand the total system pressure drop when filled with resin and is provided with an alarm for high differential pressure.

The regenerative heat exchanger transfers heat from the influent water to the effluent water which returns to the reactor. The nonregenerative heat exchanger cools the water further by transferring heat to the water in the reactor building closed cooling water system. The non-regenerative heat exchanger is designed to maintain this lower temperature even during a blow-down of a portion of the cleanup flow, when effectiveness of the regenerative heat exchanger is reduced. Blowdown is normally used only to remove excess water from the reactor.

Relief valves, as well as instrumentation, are provided to protect the equipment from overpressurization and to protect the resins from overheating. The cleanup system is isolated by the automatic closing of a control valve on high-temperature or high-pressure signals. Sample points are provided before and after the cleanup filter and after the cleanup demineralizer. The filter influent sample point is also the source of samples of reactor water. Operation of the cleanup system is controlled in the main control

room. Filter backwash and resin changing operations are controlled from a local panel. Filters are backwashed and precoated by remote manual operation.

All equipment except the pumps is shielded.

3.2 Reactor Shutdown Cooling System

The purpose of the reactor shutdown cooling system, is to remove decay heat from the reactor during shutdown operations. This operation is accomplished by circulating the reactor water through the shutdown system heat exchangers where decay heat is removed by heat transfer to the reactor building closed cooling water system. Three pump and heat exchanger combinations are provided with a total capacity equivalent to the decay heat being generated in the core at the time the system is put into operation.

5.0 OTHER SERVICE SYSTEMS

(Conforming amendment of Unit 2 PDAR required where indicated by ‡)

5.1 Fire Protection System

The fire protection system furnishes water to all points throughout the plant area and to buildings where water for fire-fighting may be required. This system is integrated into the existing Unit 1 fire protection system.

A yard fire main is provided to loop the new unit. Yard hydrants are strategically located for Unit 3.

An automatic water deluge system is provided for:

- Main power transformer
- Auxiliary and reserve transformers
- Top of turbine oil reservoir
- Hydrogen seal oil unit

A wet-pipe sprinkler system is provided for:

- Turbine oil storage room
- Turbine room basement
- Warehouse or storeroom

A remote-manual water deluge system is provided for:

- Turbine stop and intercept valves
- Turbine head end

An automatic CO_2 protection system is provided for the standby diesel generator and for the offgas holdup line.

5.2 Service Water System

The service water pumps are located in the intake structure. Duplex strainers are provided at the
‡ discharge of the pumps to remove foreign matter. This system supplies service water to Units 2 and 3 turbine and reactor buildings for cooling. Returns from the service water system are discharged to the circulating water discharge canal.

5.3 Makeup Water System

‡ Makeup water requirements are provided by processing well water through two 90 gpm deminerali-
‡ zation systems. One of the existing Unit 1, 200,000-gal tanks is piped to provide newly demineralized
‡ water to both Units 2 and 3.

5.4 Service and Instrument Air Systems (See Figure 42)

Service air is supplied at 100 psig by a motor-driven horizontal-centrifugal compressor, which is cross-connected to the existing Unit 1 compressors.

Instrument air is taken from the service air system through an oil separator and dryer.

Breathing air is supplied from the instrument air system with individual filters and regulators at each hose station.

5.5 Cooling Water Systems

Reactor auxiliary systems and turbine building auxiliary systems which require removal of heat for their functional performance are cooled by means of two closed loop cooling systems and a service water system. The electrical power for these systems is provided through buses that can be connected to the standby diesel generator.

a. Reactor Building Closed Cooling Water System

The reactor building closed cooling water system consists of two one-half capacity heat exchangers and associated pumps; piping, valves, and instrumentation. The system is located within the reactor building and is interconnected through remotely controlled motor operated valves to the Unit 2 system to provide spare capacity (See Figure 29). The system is of sufficient capacity to handle the post-shutdown cooling requirements. Principal equipment cooled by this system includes the following:

Reactor recirculation pump coolers
Non-generative clean-up heat exchangers
Shutdown heat exchangers
Drywell air coolers

b. Turbine Building Closed Cooling Water System

The turbine building closed cooling water system consists of two one-half capacity heat exchangers and pumps, located in the turbine building. The system is designed to remove heat from the diesel generator and from typical direct connected loads in the turbine building.

c. Service Water System

The service water system pumps water from the river for cooling to the reactor building and turbine building closed cooling water systems, and all other plant cooling systems except the main condenser and the containment cooling system.

5.6 Fuel Storage Pool Filtering and Cooling System

This system is designed to filter the pool water and remove decay heat from spent fuel which is stored in the fuel pool. The fuel pool cooling and filtering system is shown in Figure 22. Sufficient heat removal capacity is provided in this system to maintain water temperature at or below 125°F. The equipment for this system consists of circulating pumps, heat exchangers, filters, and the required piping and valves. Closed pumping loops circulate pool water through the heat exchangers and filters and return the flow by discharging it through a diffuser mounted at bottom of the pool. The suction for the pool circulating pumps is taken from the continuous skimmer on surge tanks mounted at the top edge of the pool. This arrangement of taking suction from the top and discharging to the bottom of the pool provides a cross flow which tends to sweep the pool and to carry off dirt and small particles.

The pumps and heat exchangers are located in the reactor building near the fuel storage pool. The fuel pool filter, which may become radioactive as it collects corrosion products, is located in the rad waste building.

Cooling water for the heat exchangers is supplied by the reactor building cooling water system.

5.7 Communications Systems

Three systems of communication are provided in the plant:

1. A local dial phone system is supplied by the local telephone company.

2. An intraplant communications system, consisting of loudspeakers, local microphones and call stations is located in the control room and principal work areas.

3. An evacuation alarm system is located at strategic points throughout the plant to warn of a nuclear incident or other emergency conditions.

X. GENERAL PLANT CONTROL AND INSTRUMENTATION

X. GENERAL PLANT CONTROL AND INSTRUMENTATION

1.0 GENERAL PERFORMANCE REQUIREMENTS

(Conforming amendment of Unit 2 PDAR required where indicated by ‡)

‡ Unit 3 is provided with a centralized control room contiguous with Unit 1 and 2 control rooms; each having adequate shielding to permit occupancy at all times. Important plant parameters are indicated, recorded, and controlled in this control room.

There are sufficient interlocks or automatically actuated protections so that procedural control are not the only means of preventing possible operational errors.

2.0 GENERAL METHOD OF PLANT CONTROL

(Same as Unit 2 PDAR as amended)

The reactor power is controlled by movement of control rods and by regulation of the recirculation flow rate. Control rods are used to bring the reactor through the full range of power and to shape the core power distribution. Changing the recirculation flow rate provides a second method for controlling reactor power. Adjustments in reactor power level and load following are accomplished with recirculation flow control. Procedural controls and protective devices are used so that thermal performance does not exceed established limitations.

Reactor pressure is automatically controlled by the initial pressure regulator (IPR), which varies steam flow to the turbine to maintain constant pressure in the reactor. As a result, the turbine power output follows the reactor power output.

A bypass system, having a capacity of approximately 40% of rated steam flow, is supplied with the turbine to restrict overpressure transients resulting from sudden turbine control valve or stop valve closure. The bypass valves are operated on an overpressure signal from the IPR. Rapid partial load rejection can be accommodated with the bypass system.

The reactor protection system overrides the above controls to initiate any required safety action.

A redundant standby liquid control system is provided for use in the remote event that the control rod system becomes inoperative.

2.1 Plant Startup

Startup of the plant is performed manually by the operators. Recirculation pumps are started from their respective motor-generator sets by adjustment of the coupling units. Pump speed is kept at a reduced level which does not exceed design motor load while the reactor water is cold. Control rods are then withdrawn according to a predetermined schedule to achieve criticality of the reactor. Power is raised to the appropriate level to give the desired rate of temperature increase until operating temperature and pressure are reached. The rate of temperature increase is based on maximum specified temperature differentials between certain parts of the reactor vessel which are not to be exceeded. Startup instrumentation consisting of neutron counting channels is used to monitor neutron flux in the subcritical region and through criticality. The intermediate range from criticality to power range is monitored by the counting channels and/or intermediate wide range monitoring channels. The power range monitors are used during power operation.

While the reactor is being brought to pressure, the turbine is on turning gear and condenser vacuum is not required. When reactor steam is available, the shaft seal system is then placed in service. The mechanical vacuum pump is started and partial vacuum established on the main condenser. Heating and loading of the turbine are accomplished by first establishing a flow of steam to the condenser through the bypass valves, then gradually transferring this flow to the turbine until rated speed and temperatures are achieved and the unit can be synchronized with the system. Startup and loading procedures established by the turbine manufacturer are adhered to during this period. After the reactor is up to operating temperature, recirculation flow must be increased to maximum before the reactor is increased in power by withdrawing control rods.

During normal operations, plant output is increased or decreased by either changing the reactor recirculating water flow or moving the control rods. As the reactor power output is thus changed, the initial pressure regulator (IPR) adjusts the turbine main steam control valves to maintain constant reactor pressure. The resulting change in reactor steam output thereby causes a corresponding change in the turbine-generator power output.

2.2 Power Operation

After the generator is synchronized with the Commonwealth system and a power output established, the following methods are available for maintaining the proper power output to meet the system requirements. These are: (1) manual adjustment of control rods, (2) manual or automatic adjustment of reactor recirculation flow, or (3) a combination of these two methods. These are discussed further in Section X-3.

3.0 REACTOR CONTROL

(Same as Unit 2 PDAR as amended)

The control of reactivity within the reactor core is accomplished by means of three basic power and reactivity control systems. Gross reactor power and power distributions within the core are controlled by the control rods, and manipulated by the operator. Reactor power can also be controlled over a range of approximately 30 percent by variation of the recirculation flow rate. Under emergency conditions, wherein it is assumed the control rods are unavailable for use, the standby liquid control system can be used to shut down the reactor and maintain the core subcritical. These systems are also provided with specific inherent and engineered safety features which are designed to mitigate the consequences of equipment failures, component malfunctions, and operational errors.

The reactor protection system is provided to override the operating controls and to initiate specific safety actions when the process conditions reach pre-established limits.

The requirements and characteristics of the control system are described in this section.

3.1 Operational Control

(Same as Unit 2 PDAR as amended)

3.1.1 Performance Objectives

Mechanical and electronic devices are included in the design of the control systems which serve two basic objectives:

a. To achieve the operational control requirements which are specified in Section IV-5.0

b. To assure that no single component failure within the integrated reactivity control system results in damage to the reactor primary system.

3.1.2 Bases

The reactor operational control system is designed to provide sufficient reactivity compensation to make the reactor subcritical from its most reactive condition with the highest worth rod fully withdrawn from the core. In addition, the control system provides the means for continuous regulation of the core excess reactivity at all times.

The core nuclear characteristics as described in Sec. IV-4.0, have established restrictions pertaining to the maximum amount and rate of reactivity addition. Such design restrictions are imposed in order to limit potential consequences which might arise from reactivity insertion accidents as described in that section. In order to provide reasonable assurance that those reactivity addition restrictions can be achieved without relying solely on operating procedures, mechanical and automatic devices are provided.

3.1.3 Description of the Operational Control Systems

The power level of the reactor is controlled by means of both the control rod system and the recirculation flow control system.

The control rod drive system, which consists of individual control rod drives and hydraulic control devices, is designed to position control rods for regulating power level and power distribution within the core. Each of the 177 control rods has its own drive, plus separate control and scram devices. Each control rod drive is electrically and hydraulically independent of the others, but utilizes a common hydraulic pressure source for normal operation and a common dump tank for scram operation.

Withdrawing a control rod reduces the neutron absorption effect of the rod and increases core reactivity. Reactor power then increases until the increased boiling and void formation just balances the change in reactivity caused by the rod withdrawal. The increase in boiling rate tends to raise reactor vessel pressure causing the initial pressure regulator to open the turbine control valves to maintain the reactor vessel pressure constant. When a control rod is inserted, the converse effect takes place.

Rate of power increase is limited by the rate at which control rods can be withdrawn. Control rods are operated one at a time and are withdrawn in a symmetrical pattern by quadrants. Assuming that all rods will probably not be withdrawn continuously and that the operator will want to make periodic checks as the power level is increased, a nominal time of one-half hour or a rate of about 3% per minute to achieve full load appears reasonable. Actual allowable rate of power increase may be less, however, unless the turbine is up to operating temperature.

a. Control Rod Drive Mechanism

The control rod drives are of the locking piston type. This type of drive has been developed and proved at the Dresden Unit 1, SENN, Humboldt Bay and Big Rock Point plants. The control rod drive mechanism as described herein is the same as used on the Oyster Creek and the Nine Mile Point stations. A schematic diagram of the drive and hydraulic system is shown in Figure 25, and an assembly drawing of the drive mechanism is shown in Figure 16. The drive mechanisms are mounted vertically in thimbles which are welded into the reactor bottom head penetrations. The low end of each thimble terminates in a special flange which contains ports for attaching the hydraulic system lines, and a machined face which mates with a corresponding flange at the lower end of the drive. The operating principles and construction details of the mechanism are described in Appendix B.

At the top end of the drive index tube (the moveable element), a coupling is provided which engages and locks into a socket at the base of the control rod. Once locked, the drive and rod form an integral unit which must be manually unlocked by specific procedures before a drive or rod can be removed from the reactor. These procedures are established to prevent accidental separation of control rod from control rod drive.

The drives position the control rods in approximately 6-inch increments of stroke and hold them in these discrete latch positions until actuated for movement by the hydraulic system to a new position. Visible indication of the position of each drive is displayed in the control room by means of illuminated numerals which correspond with the respective latched positions. In addition, indication is provided that show travel limits of the drive have been reached. These indicators and those for the in-core monitors are grouped together and displayed on the control panel and arranged on the board to correspond to relative rod and in-core monitor positions in the core.

The effect of a short circuit on a control rod drive withdrawal circuit has been analyzed. The withdrawal sequence requires that the rod be jogged in before it can be withdrawn. To accomplish a withdrawal would require two carefully selected short circuit paths, and the first short must be removed before the

application of the second short, the time interval being within fairly close limits. Unless all these conditions are met, the rod would not move out continuously. It is possible under the right combination of circumstances to move one rod and notch with one short circuit. No plausible malfunction is foreseen that could logically lead to fuel cladding damage.

b. Hydraulic Control System

Under normal operation, the hydraulic control system uses unheated condensate supplied by one of two drive system pumps as the working fluid to accomplish hydraulic positioning of the control rod drives and their attached control rods. These pumps take suction from the condensate system at low pressures and temperatures and discharge to the pressure control stations through appropriate filters. Water for charging scram accumulators is provided at approximately 1400 psig while the water required for cooling and positioning the drives is provided at a constant differential of approximately 200 psig above normal operating reactor pressure. Water for drive cooling is further adjusted at the control station to maintain cooling water flow through the individual drive into the reactor vessel. Pressure and flow for fast insertion (scram) of the control rods is supplied by stored energy in the scram accumulators or by reactor pressure. The operation of the hydraulic system is described in Appendix B.

The hydraulic control system is so arranged that the equipment common to each drive can be packaged in modular form, one module for each drive. Any failure of the scram system within a particular module would, therefore, affect only its associated drive. Areas which are necessary to the scram system and common to all modules include the accumulator charging header, the scram dump header, and the dump tank.

If for any reason the accumulator charging header supply pressure should fail (which failure would be alarmed), the stop-check valves supplying pressure to the accumulator in each module would close and hold the charged pressure so that scram capability is not lost.

The dump volume, which receives water ejected from the drives during scram, is supplied with four level switches (two in each channel of the reactor protection system) that scram the reactor if the water level rises to a pre-set value. This arrangement assures that adequate volume is available in the system to receive the scram water.

The only common point in the system where an accident, such as a plugged line, could affect the scram time of more than one drive would be in the scram dump header itself. As this header is much larger than the individual lines feeding into it, and since it is thoroughly checked during the acceptance of pre-operational tests, it is extremely unlikely that this line could become plugged. Further, action of the drive during a scram is such that it will develop a pressure in excess of 2000 psig if its discharge is restricted. This pressure should be capable of expelling any conceivable line restriction. The system is designed to accommodate such pressures.

Also, because of the unique design of the locking piston drive, an automatic scram occurs if both drive lines or only the outlet line is severed at any point with the reactor at pressure.

During reactor shutdown, and with fuel loaded into the core, all control rods are normally inserted. A shutdown criteria has been established so that the reactor is still subcritical with the strongest rod withdrawn. Interlocks are provided which prevent the withdrawal of more than one control rod with the mode switch in the refuel position

Rapid shutdown of the reactor is accomplished through actuation of the reactor protection system which opens the scram dump volume valves and permits water under pressure to pass from the reactor accumulators to the scram dump volume. The action exerts a pressure on control rod drive piston mechanisms, and cause all rods to be fully inserted into the core. Any rod which is fully withdrawn will be fully inserted in approximately 3-1/2 seconds. Pressure for rod insertion is also available from the reactor, as noted in the previous section.

c. Recirculation Flow Control

Reactor power can be controlled over an approximate 30 percent range by adjustment of the reactor recirculation flow without requiring control rod movement. Reactor power change is accomplished by utilizing the large negative power coefficient found in all General Electric BWR designs. To increase reactor power, recirculation flow is increased which reduces the void accumulation in the core by removing the steam formation at a faster rate, thus increasing reactivity in the core. As reactor power increases a new power level is established where the transient excess reactivity is balanced by the new void formation. Conversely, when a power reduction is required, recirculation flow is reduced. The typical relationship between coolant flow rate and reactor power is shown in Figure 32.

Figure 31 shows a schematic diagram of the flow control system. Speed of the reactor recirculation pumps is varied to change the recirculation flow. Motor generator sets with adjustable speed couplings vary the frequency of the voltage supply to the new pump motors to give the desired pump speed. To change reactor power, a demand signal from the operator or a load-frequency error signal from the speed governing mechanism is supplied to the master controller. A signal from the master controller adjusts the set point of the controller for each coupling. This signal is compared with the actual speed of the generator associated with each controller. The resulting error signal causes adjustment of the coupling and generator speed to reduce the error signal to zero. The recirculating pump motor adjusts its speed in accordance with the frequency of the generator output voltage. The power change resulting from a change in recirculation flow causes the initial pressure regulator to reposition the turbine control valves.

If procedural or other types of control were not provided for, control rod withdrawal from a low-flow, low-power operating state could result in a reduction of the minimum critical heat flux ratio below established limits before a high flux scram would occur. Consequently, operating procedures reflect lower power limits as a function of reduced coolant flow. In addition, an electrical interlock system to prevent rod withdrawal outside the acceptable power flow range is provided.

Figure 34 represents typical reactor margins under the flow control mode. Curves a and b show the power at which the critical heat flux ratio would be 1.0 and 1.5, respectively, as a function of flow. Curve c is a typical interlock line, i.e., the reactor protection system blocks rod withdrawal any time the core power exceeds the value given by the line. Curve d is a typical reactor behavior line. With flow and power initially at any point on the curve, a flow change will cause the power change along the path indicated by the curve.

3.1.4 Safety Features Included in the Control Design

In addition to the inherent safety characteristics which have been included in the control rod drive system, other safeguards features are incorporated in the design of the control systems which are specifically directed at the prevention of abnormally high reactivity addition rates. These are described below.

a. Control Rod Worth Minimizer

Under normal conditions of operation of a boiling water reactor, control rods are moved in predetermined sequences and patterns which result in low rod worths substantially less than 0.025 Δk, e.g. the average rod worth at power is approximately 0.005 Δk and the maximum worth of a rod in a typical full power operation pattern is about 0.01 Δk. High rod worths result from clustered rod patterns which are inconsistent with good operating practice and would probably occur only as a result of departure from standard operating procedure or for the conduct of tests. The rod worth minimizer has been developed to provide a backup for the procedural controls to prevent establishment of control rod patterns which could result in unacceptably high rod worths.

The minimizer is a high reliability computing device utilizing an internal checking circuit. The input signals monitor the position of the selected control rod and transmits this data to a small electronic digital computing device. Other inputs to the computing device consist of reactor operational mode, control rod positions, withdrawal sequences, and reactor power level. The computing device will identify out-of-sequence control rods and initiate rod block signals to prevent rod motion that would lead to the development of high rod worth patterns, i.e. any pattern with control rod worths in excess of about 0.025 Δk. A control and display panel is provided in the reactor control room to permit the operator to monitor the status of the minimizer at all times. The minimizer can operate on either of two logic systems. It can continuously monitor and evaluate rod worths or it can monitor the sequencing of a previously evaluated rod withdrawal procedure.

Under the rod worth evaluation logic mode, whenever a rod is selected for movement, its worth and the worth of near neighbors is evaluated. Any motion of the rod is alarmed or blocked if such motion leads to any rod worth exceeding a preset limit. A prototype minimizer utilizing this general type of logic was installed on Dresden Unit 1 for test purposes early in 1965.

With a sequencing logic mode, rod motion is restricted by alarm and interlock to a fixed rod withdrawal sequence. Such rod sequences have been previously evaluated to restrict rod worths below a preset limit.

Control rod worth minimizers will have been in operation on the Jersey Central Power and Light Company's Oyster Creek plant and on the Niagara Mohawk Power Corporation Nine Mile Point plant prior to startup of Dresden Units 2 or 3.

b. Rod Velocity Limiter

Each control rod is equipped with a rod drop velocity limiter which adds significant viscous drag to a control rod moving downward. This limits the rate of free fall of a control rod from the core, and hence limits the rate of reactivity insertion in the event of the postulated "control rod drop accident" (Section XI-3). The rod velocity limiter is designed to limit the free fall velocity of a control rod to approximately five ft/sec. A 5 feet per second rod velocity limits the potential consequences of dropping the maximum worth control rod allowed by the rod worth minimizer to minimal fuel cladding damage with no fully molten fuel or vaporized fuel.

The rod velocity limiter is an integral part of the bottom of the control rod. The rod velocity limiter is basically a loose fitting piston which travels in the control rod guide tube over the entire control rod stroke as shown in Figure 77. As this piston moves along the guide tube, the water which fills the tube

must be displaced from one side of the piston to the other. The rod velocity limiter is shaped to provide a streamlined profile in the scram (upward) direction and a non-streamlined profile in the drop-out (downward) direction. In addition, added resistance is obtained in the drop-out file in the drop-out direction by directing water flow from the center of the limiter to the outside annulus. The pressure differential which is developed across the piston results in a force which retards the piston motion. No moving parts are required to create the retarding forces or change the retarding forces developed for insertion and withdrawal. The high pressure differential results in a low terminal velocity in the event of a rod drop-out, yet the retarding force during scram insertion of the rod is low enough so that adequate scram velocities are achieved. The rod velocity limiter always remains in the guide tube except when the control rod is removed (Figures 12 and 77). The fuel support must be removed before the control rod can be removed because of the shape of the velocity limiter.

Adequate clearances have been left to prevent an interference of rod insertion by the rod velocity limiter and to prevent excessive forces on the control rod drive mechanism. The ($\sim$ 0.75 inch radial) spacing between the rod velocity limiter and the guide tube provides adequate margin against binding or interference and does not appreciably increase the control rod scram time. A lower velocity would require smaller clearances and would impose additional column loads on the index tube during scram. Therefore, the 5 ft/sec rod velocity limiter is the best compromise between added safety during an improbably accident and minimum effects on normal operation.

A drop test facility was built to evaluate proposed velocity limiter designs. By dropping the test models first one way and then reversed, the resistance effectiveness ratios $\left(\frac{\text{velocity (scram)}}{\text{velocity (dropout)}}\right)$ were obtained. Velocity curves were recorded for the total drop in both directions. Many designs were tested. The drop test program results established that a velocity limiter could be provided that would limit the dropout velocity of the control rod to the value established in the criteria. The specific design of the velocity limiter was based on these test results.

Another series of tests were conducted on a production control rod drive to evaluate the effect of additional loadings imposed by the velocity limiter. Based on testing thus far, the limiter will cause an increase in scram time of approximately 0.2 second (measured from start-of-motion to 90 percent of stroke, at reactor pressures of zero and 1000 psig). Design specification for scram time at these conditions is 3.4 seconds, and actual times range from 1.6 to 2.6 seconds. Therefore, the increase in time due to the rod velocity limiter can be accommodated within the margin between actual and required scram times.

Tests will be made using a full scale production prototype velocity limiter and guide tube. This test will be made under cold and hot operating conditions using a production drive and simulated core. This test will confirm calculated limited dropout velocity and confirm tolerable drag forces during scram.

c. Control Rod Drive Thimble Support

The design for the thimble support system is based on the assumption that, despite the conservatism employed in the thimble design, any one drive thimble could experience a complete instantaneous circumferential failure with the reactor vessel at design pressure of 1250 psig. For the dynamic loading associated with this unlikely failure, the support system is designed to achieve the following objectives:

1. Limit the total downward travel of any control rod and its drive to approximately 3 inches and prevent the drive and thimble from falling away from the reactor vessel.

2. Provide clearance between the thimble support plates and the thimble to prevent contact due to thermal expansion which will occur during normal operation.

3. Provide a system which is easily removable in sections to permit access to the control rod drive mechanisms, position indicators, and in-core thimbles for maintenance and inspection.

4. Provide support for the control rod drive in the unlikely event of instantaneous failure of the flange bolts on any one drive. (This is a less severe accident condition with respect to the total force on the support system. In this case the force is a function of reactor pressure acting on the inside rather than the outside area of the thimble.)

5. Provide instrumentation to assure that the supporting system is in place prior to startup of the reactor.

The support system consists of structural members, rods, support plates and disc springs (Figure 56). The structural members are placed between the rows of thimbles and are located in the spaces between the thimbles below the bottom head of the reactor vessel. These members are supported on the reinforced concrete pedestal which supports the reactor vessel.

The support plates are located under the drive flanges. These plates are attached to the rods which are supported from the structural beams. A stack of disc springs is provided on each rod. The support system therefore is an elastic structure which is capable of absorbing the energy resulting from the assumed failure. This system also limits the magnitude of the resulting dynamics forces on the supports. In addition, this modular grid design permits access to a drive for maintenance or replacement with removal of only one module. Openings for the incore instrumentation are accommodated by the open grid structure.

When the supporting system is installed a gap of about 1 inch will be provided between the lower support plates and the contact surface on the control rod drive flanges. During system heatup this gap will be reduced due to a net downward expansion of the thimbles with respect to the support plates. In the hot, operating condition, the gap will be approximately 1/4 inch.

The downward travel of the thimble following the assumed thimble failure will be the sum of the initial gap, plus the elastic deflection of the supporting structure under dynamic loading. The support system to be provided will limit the total downward movement of the drive and thimble to 3 inches under the worst case, i.e., with a gap of approximately 1 inch. The total deflection would normally be substantially less than 3 inches because an operating gap of 1/4 inch exists between the lower support plates and the contact surface on the control drive flange. Thus the drive movement following a thimble failure, will always be less than one normal drive "notch" position.

A number of different arrangements regarding the size of the rods, the number of springs and the stiffness of the support beams and plates are being investigated to determine the optimum design for this system.

3.1.5 Surveillance and Testing

During reactor operation individual control rod drive mechanisms can be actuated to demonstrate functional performance.

Each pair of scram solenoid pilot valves shall be provided with a test switch for rod-scram time test and provisions made for connecting a timing recorder to the rod position indicating circuit. A test switch shall be provided for the scram dump volume vent and drain valves.

During reactor shutdown the shutdown margin can be verified. This is achieved by withdrawing a maximum worth rod and demonstrating that the reactor is substantially subcritical.

The control rod worth minimizer is a high reliability computing device utilizing an internal checking circuit. Details of the surveillance and testing program will be developed after determination of the final logic and circuit design.

The rod velocity limiter is an integral part of the control rod assembly and will require no specific retesting after installation. All rod velocity limiters are tested for adequate functional performance before installation. The control rod drive thimble supports can be individually inspected during reactor shutdown.

3.2 Reactor Stability Criteria

(Same as Unit 2 PDAR as amended)

The reactor systems are so designed that the overall system stability meets specific criteria. Analog and digital plant models, utilizing values of the important parameters appropriate to designed and purchased plant equipment, are developed during plant design. These models allow optimization of system characteristics. The criteria applied to the models are more stringent than those applied to the actual plant, for added assurance that the plant will meet its criteria. The basic models used in these studies are similar to those proven by tests in other boiling water reactors such as Big Rock Point, Humboldt Bay, SENN, and Dresden Unit 1 under both normal and high void test conditions. All of these reactors have exhibited appreciable stability margins and it is expected that operation of Dresden Units 2 and 3 will show a similar margin.

The specific stability criteria applied are:

1. The response of each of the important measurable variables (neutron flux, pressure and steam flow) to small step (or near-step) disturbances should be underdamped with a decay ratio (ratio of second overshoot to first overshoot) of less than 1:4.

2. Each of the following disturbances will be imposed, one at a time:

   a. A pressure set point change of approximately ±5 psi.

   b. A control rod position change equivalent to a local power change of five to ten percent of point.

   c. A recirculation flow change equivalent to a power change of five to ten percent of point.

   d. A subcooling change (by changing feedwater flow) equivalent to power change of five to ten percent of point.

3. The plant will also satisfy the following:

   a. Under steady-state operation, the steam flow variations, as measured by plant instrumentation, shall be less than ±1 percent of rated. Part or most of this variation may be due to limit cycling caused by deadband in the pressure regulator. This limit cycling should not be interpreted as reactor instability.

   b. The neutron flux noise as measured by ion chambers shall be less than ±10 percent about the mean when operating at full power. This results in surface heat flux variations which are less than ±1 percent and steam flow variations which are less than ±1 percent.

These criteria are based on standards accepted industry-wide and are evaluated by techniques which are standard in the control industry (see Appendix G).

3.3 Standby Liquid Control System

(Same as Unit 2 PDAR as amended)

3.3.1 Performance Objective

The purpose of the standby liquid control system is to provide a redundant, independent, backup control mechanism to be used in the remote event that the control rod system is inoperable.

3.3.2 Bases

The design basis for the standby liquid control system results from the postulation that while at full power, none of the control rods that are withdrawn can be inserted into the core. In actuality, there are numerous ways of inserting the control rods into the core, e.g., either normal drive mode or scram mode using the rod drive feed pump pressure, accumulator pressure, or reactor pressure, so that this condition has a very remote possibility of occurrence. Since all reactor control functions are provided by the control rod and drive system, the standby liquid control system is clearly redundant.

Operation of the reactor at full power with the control rods immovable could continue indefinitely until such time as the core reactivity runs out. The standby liquid control system is available under the postulated conditions to shut the reactor down as required.

3.3.3 Description

The system consists of a tank containing the neutron absorber solution, high pressure pumps for injecting the solution into the reactor core, and explosive actuated shear plug valves for isolating the liquid from the reactor until required. The two liquid control pumps are positive displacement type, each capable of discharging the liquid into the reactor at 1250 psig, which is 250 psig above the reactor operating pressure. The liquid, a sodium pentaborate solution, is injected through a spray sparger into the reactor vessel to mix with the water in the vessel, thereby poisoning the reactor and maintaining it subcritical in the cold-clean condition. The system is manually operated from the control room.

The reactivity requirements for the standby liquid control system are summarized in the following table:

Parameter	ΔK	Natural Boron, ppm
Rated to Zero Power	0.040	200
Xenon	0.030	150
Hot to Cold	0.050	250
Shutdown Margin	0.050	250
Total	0.170	850
Mixing Factor	1.25	
Total	0.213	1063

The design reactivity addition rate is -0.002 Δk per minute (10 ppm per minute) as is the design rate for the GE boiling water reactor being supplied to the Niagara Mohawk and Jersey Central power companies. This addition rate is an arbitrary selection made to assure that all of the solution is in the reactor primary system by the time the system is cold. Sufficient thermal energy (assuming the removal of decay heat only) is stored in the water in the vessel and in the vessel wall to allow the reactor to remain hot for an indefinite period. Even with the condenser and the shutdown cooling system available, a normal cool down period varies from 12 to 24 hours. Consequently, the selected injection rate of 0.002 Δk per minute (total injection time of 107 minutes or one hour and 47 minutes) is much faster than actually required. There is a margin of 0.050 Δk in the design of the system since only 0.120 Δk is required to shut down the reactor with a cold clean (new) core from the hot operating (full power) to cold shutdown condition. On this basis, sufficient neutron absorber is in the system at the end of an hour to effect a cold shutdown. The reactor is shutdown hot in ten to twenty minutes.

If the standby liquid control system is actuated during refueling when the refueling pool is flooded, the reactivity worth is greater than -8 percent Δk. This figure assumes that the gate between the refueling pool immediately above the reactor vessel and the fuel storage pool is closed before any significant amount of neutron absorber solution has diffused into the pool and also that the solution is evenly distributed throughout the reactor vessel and the refueling water above the reactor. The standby liquid control system is not intended to be used as a reactivity control device for the refueling pool.

The neutron absorber solution used is a 13 percent solution, with a saturation temperature of 59°F. The ambient temperature of the solution is approximately maintained at 80°F, which avoids precipitation of the sodium pentaborate from solution. If the solution temperature drops to 65°F, an immersion heater in the solution tank and a heating cable wrapped around the pipe line between the solution tank and the pump suction heats the solution to approximately 80°F. Temperature and liquid level alarms for the system are annunciated in the control room.

3.3.4 Surveillance and Testing

The system is designed to permit periodic testing, maintenance, and operation of the injection pump and appropriate valves. The pump and circulating system can be operated outside the reactor. A demineralized water purge system is provided so that the remaining portion of the system may be tested by

pumping clean water through the distribution sparger and into the reactor. The concentration of boron in the solution can be determined by chemical analysis periodically, and temperature monitors are provided to assure that the solution is above its saturation temperature.

4.0 REACTOR INSTRUMENTATION SYSTEMS

(Same as Unit 2 PDAR as amended)

4.1 Performance Objectives

The objective of the neutron monitoring system is to provide level monitoring from source range to full power on a gross and local basis.

4.2 Bases

Information on the power level of the core must be supplied so that control and protection systems requiring reactor power level information can function.

4.3 Description of the Neutron Monitor System

In-core neutron monitoring was developed for use in the safety system in Unit 1 and the feasibility and reliability of this concept has been demonstrated through more than five years operation of that reactor. The same basic concept is to be used in Units 2 and 3 with a number of improvements which provide in-core instrumentation at all levels of operation from source to rated power. Substantially identical in-core monitoring systems are to be utilized in the Oyster Creek and Nine Mile Point plants so that before the startup of Units 2 and 3 there will have been a practical demonstration of the application of the improved in-core monitoring system design in full scale power reactor operation.

Adequate neutron monitoring of the core depends on two important variables. The first is the neutron flux at the detector and the second is the neutron to gamma induced signal ratio. Calculations have shown that because of the shielding effect of the large core and the thickness of the downcomer water gap, it is necessary to locate all neutron monitoring system detectors within the core to provide sufficient neutron flux and to meet the minimum neutron to gamma induced signal ratio.

A neutron monitoring system employing miniature chambers, all located within the core, has been designed to overcome the attenuation problem or lack of neutrons external to the reactor vessel. The complete monitoring range from source level to full power is covered by three sub-systems providing overlap coverage of: (1) source range; (2) intermediate range, and (3) power range. These subsystems cover the following range:

Source Range	Source level to about 0.01% of rated power. These detectors can be retracted from the core to extend the range to about 10% of rated.
Intermediate Range	0.0001% to about 10% of rated power.
Power Range	1% to 125% of rated power.

All of the detectors are located in thimbles in the reactor vessel. There are a sufficient number of thimbles to provide the necessary coverage of the core to fulfill the criteria for the three ranges of instrumentation. Each thimble is located at the interstice of four fuel assemblies.

Each neutron monitoring sub-system instrument channel is designed with internal monitoring having capabilities to provide an alarm, a scram trip, and/or a rod and flow block due to an inoperative condition

such as loss of power, switched out of operation when not properly bypassed, etc. Upscale and downscale trips provide alarm-rod block to insure that the instrument is within the proper operating range. Excessively high scale provides a scram trip in those instruments in the Reactor Protection System (Section X-5).

A number of channels of each type of instrument are provided to allow a specific number to be out of service at one time for maintenance and test and still provide the required core coverage for information and/or safety. Those systems that provide protection to the reactor always have a minimum of one channel located in each of the four Reactor Protection System logic subchannels.

4.3.1 Source Range (Source through Criticality)

The source range instrumentation will be designed to provide the information needed for knowledgeable and efficient reactor startup operations.

A number of neutron sources are inserted in the reactor core to assure an adequate count rate of fission neutrons for instrumentation readout at shutdown and permit the measuring of multiplication of fission neutrons during approach to critical. The source range instrumentation covers the range from source level to about 0.01% of rated power. The detectors are initially located within the core just above the centerline and can be retracted to positions of lower neutron flux level to extend the usable range to about 10% of rated power. Five channels of pulse counting type instruments which have a high degree of discrimination between neutron flux and gamma flux are used in the reference design core to provide the operator with accurate neutron level information, particularly in the range when criticality is approached.

Each channel consists of a miniature fission counter detector, a preamplifier, and a log count rate meter with appropriate power supply. All equipment except the detector are located outside the drywell. Neutrons striking the sensitive material (U_3O_8-93% enriched) of the primary detector cause pulses of current to appear in the detector output. These pulses are amplified and shaped by the preamplifier which is just outside the drywell and transmitted to the log count rate meter in the control room for counting. Meters on the control console give continuous indication of count rate, and a strip chart recorder gives a continuous record of counting rate of the selected channels. The recorder provides an indication of count rate level as well as showing the trend of count rate with respect to time.

The log count rate meter also includes circuitry to differentiate "counts" with respect to time to derive a reactor period measurement. Meters on the control console give continuous period indication. An adjustable trip circuit actuates an annunciator to warn the operator of approach to too short a period (too rapid rate of flux increase).

Each chamber has a sensitivity of approximately 1×10^{-4} counts per second per nv of neutron flux and is capable of detecting the planned source levels of the order of 6×10^4 nv. The log count rate meter has a range of six decades with a maximum counting rate of 10^6 counts per second.

The sources and detectors will provide a minimum signal-to-noise ratio of 3/1 and a minimum count rate of 3/sec during fully controlled conditions prior to initial power operation. During subsequent operations, the above conditions will be met before the reactivity of the core exceeds the reactivity which existed during fully controlled conditions prior to initial power operation.

A downscale trip provides information as to adequacy of the count level or conditions of the instruments. An intermediate level trip blocks control rod withdrawal until the count level is above the settings

if the detector is not fully inserted. A high level trip also blocks rod withdrawal. These two trips insure that the operator retracts the detector to maintain the count level between the two trips and provide period information to 10% power. Failure in the instrument is monitored by the inoperative trip which blocks rod withdrawal. One of the instruments may be bypassed if inoperative.

Calibration of the source range instrumentation will be performed according to the standard procedures used for these ranges on the out-of-core instrumentation in presently operating plants. The design number and location of the detectors will be made on the basis of achieving the stated objectives during all operating conditions at any time in core life. During calibration the inoperative trip is activated.

Motor-operated drives are provided to move the detectors from the high neutron flux region near the center of the core to a relatively low neutron flux region below the core. This serves to extend the usable range of the counting channels and prolong the life of the counters by keeping them in low flux regions except during startup. The drives are controlled from the main control console. Interlocks are provided to insure that chambers are inserted into the core before the reactor can be started up.

The detector assemblies are installed from the bottom of the reactor vessel through a flanged nozzle which penetrates the vessel and contains a dry pressure tube which extends into the core. The pressure containing tubes thus separates the assembly from the reactor water environment.

4.3.2 Intermediate Range (Criticality to 10% of Rated Power)

a. Description

The intermediate range instrumentation will be designed to provide the required degree of automatic power level protection. This instrumentation will also provide the information needed for knowledgeable operation of the reactor in the intermediate power range.

Eight channels of instrumentation are provided in the reference design core to monitor the reactor neutron level from about 0.0001% to 10% of rated power providing approximately a two decade overlap (a minimum of one decade) with the source range system.

Each channel consists of a miniature fission chamber detector, a preamplifier, a linear amplifier with power supply and a range selector switch. All equipment except the detector is located outside the drywell. Indicating recorders on the control panel indicate neutron level in terms of reactor power. The range selector switches for each amplifier are mounted near the recorder of the reactor control station. The amplifier is a linear-type instrument and covers a range of five decades in 10 steps.

Triggering type trip circuits are provided to serve as downscale rod block, high flux alarm-rod block and high flux scram. The alarm-rod block and scram trips are calibrated in terms of percentage of meter range rather than rated reactor power. This gives extremely fast and safe protection at all power ranges from minimum range setting to full power operation. If the operator does not keep the meters "on scale," he will initiate an alarm, a rod block, or a downscale trip. The downscale trip assures that the meters are always on the correct range before rods are withdrawn to increase power and also serves to give an early warning of amplifier or detector malfunctions.

A "channel inoperative trip" is provided that introduces a scram trip if the instrument channel is inoperative. During calibration the "inoperative trip" is actuated and will cause a scram and rod block trip if the instrument is not bypassed.

The chamber arrangement in the core and in the reactor protection system is such that one intermediate range channel in each of the protection system channels may be bypassed provided the two associated chambers are not in the same region of the core. Further discussion of intermediate range channel bypassing is contained in Section X-5.

Calibration of the intermediate range instrumentation will be performed according to the standard procedures used for these ranges in the presently operating plants. The design number and location of the detectors have been made on the basis of achieving the stated objectives during all operating conditions at any time in core life.

Motor-operated drives are provided to move the detectors from the high neutron flux region within the core to a lower neutron flux below the core. This serves to prolong the life of the detectors by storing them in low flux regions during operation above 10% rated power. The drives are controlled from the control console. Interlocks requiring the chambers to be inserted into the core are provided to insure protection when the reactor is started up.

b. Campbell Method

The intermediate equipment utilizes a new method of measurement which has been under development for several years. This method uses the variation of signal that is usually considered as noise on the dc signal from a fission chamber and is known as the Campbell method. The method was developed from a statistical theory of random occurring events derived by Normal Campbell. In applicable terms, this theory is: that when random events are detected by a linear detector, they pile up on one another. Therefore, both the average and the mean square deviation about this average are a function of rate of occurrence of the events. Applying this theory the noise or ac signal is accepted and the dc signal is rejected by a coupling capacitor between the chamber and amplifier. The ac signal is amplified, squared, integrated and provides a linear indication of power level. The use of ac equipment also eliminates the problems of dc leakage in cables and dc drift in the amplifier.

The static sensitivity of the system has been measured for a range of neutron fluxes and for different chambers, and demonstrated to be predictable and well understood. The Campbell approach provides excellent discrimination between neutron and gamma signals of about 1000 to 1. The equipment is ac and therefore verification of the acceptability of the dynamic response of the system is both experimental and analytical.(1) Measurements have been made of the neutron flux transient during shutdown of a reactor with the "Campbell" system. The measured transient was in good agreement with the transient measured using a conventional d-c ionization system. This type of test is used to verify the acceptability of the dynamic response of the "Campbell" system during typical reactor transients.

---

(1) The results of an extensive program is reported in the series of reports under AEC Contract AT (04-3)-189, Project Agreement 22. Some of the key reports which have been prepared and submitted to the AEC include the following:

GEAP 4604	"Application of Counting Techniques to In-Core Ion Chambers"
GEAP 4747	"Theory of the Campbell System of Reactor Instrumentation"
GEAP 4797	Cable for Pulse Counting and Campbelling
GEAP 4862	Reactor Control System Based on Counting and Campbelling Techniques.

Extensive analysis of the dynamic characteristics of the system have been performed. The validity of the analytical models has been verified experimentally.[1] Measurements were made of the variation of output from a "Campbell" system using a scintillation crystal exposed to a rapidly varying gamma field. These experimental data were in excellent agreement with the analytically predicted output signal variation.

4.3.3 Power Range (1% - 125% Rated Power)

a. Local Power Range Monitors (LPRM)

The objectives of the local power range instrumentation are to

- continuously monitor local heat flux and alarm on excessive conditions,
- permit evaluation of the critical core parameters to the accuracy required by core design and the established limits,
- and to permit demonstration or compliance with the established limits on core critical parameters with the speed and ease consistent with efficient operation of the plant.

There are approximately 164 chambers for measurement of the local neutron flux inside the reference core. Each channel consists of a chamber and separate amplifier and indicating instrument for each point. The readout instruments are located in the control rod position display panel in the control room in their general relation to the control rods.

There are approximately 41 radial locations in the reference design core which contain ion chamber assemblies. Four chambers are fabricated into one of these assemblies with the chambers spaced at 3 feet intervals, starting 1-1/2 feet from the bottom of the core. The signal from the chamber is carried in a mineral-insulated stainless steel sheathed cable. The cable is welded to the ion chambers to make a pressure-tight assembly.

The ion chamber assemblies are installed from the top of the reactor vessel when the vessle head is off. The chamber will be cooled by reactor water in direct contact with the chambers and cable. The chamber cable leads pass through a high pressure connection at the bottom of the reactor vessel and terminate in an electrical connector located outside of the vessel. The cables from the electrical connectors on each assembly are routed to amplifiers mounted in the control room. Output from the amplifiers is shown on meters in a rod-position and in-core flux level display on the main panel, with indicator lights to show high flux approach. Flux level for each in-core chamber is indicated separately.

---

(1) The results of an extensive program is reported in the series of reports under AEC Contract AT (04-3)-189, Project Agreement 22. Some of the key reports which have been prepared and submitted to the AEC include the following:

GEAP 4604	"Application of Counting Techniques to In-Core Ion Chambers"
GEAP 4747	"Theory of the Campbell System of Reactor Instrumentation"
GEAP 4797	Cable for Pulse Counting and Campbelling
GEAP 4862	Reactor Control System Based on Counting and Campbelling Techniques.

The local power distribution monitoring instrumentation will be calibrated using data obtained from the Traveling In-Core Probe (TIP) calibration system and heat balance data such that the individual amplifier readings will be proportional to the average heat flux in the four fuel rods which surround the in-core chamber at the same elevation as the chamber.

After the calibration is performed, it is expected that the evaluation of the relevant core parameters will be performed using the amplifier readings and other data to provide

1. Three-dimensional power and heat flux distributions.

2. Quality, void, and minimum critical heat flux values throughout the core.

Therefore, the LPRM and TIP systems are a tool which gives the operator confirming information on static and dynamic core conditions. They provide him with a "cause and effect" understanding through immediate visual information of the effects of rod movement or other actions that may affect the reactor. It permits more efficient plant operation and improved plant capacity factor.

b. Average Power Range Monitoring (APRM)

The average power range monitor will be designed to scram the reactor automatically during bulk power level transients before the power level exceeds certain specified values. The instrumentation will be used to prevent fuel damage from single operator errors or equipment malfunctions in the power range. In addition, the instrumentation will provide accurate indication of thermal power level of the reactor in the power range.

Eight channels of instrumentation are provided in the reference design core to monitor reactor neutron levels in the normal operating power range.

Each channel consists of signals from eight or more selected in-core local power range monitor amplifiers, an average power range monitor, a recirculation flow variable trip bias unit, and meters and/or a strip chart recorder to indicate neutron flux level in terms of reactor power level. The signals from the in-core amplifiers are averaged in the average power range monitor units. Each channel will be calibrated to read percent of rated thermal power using conventional heat balance techniques.

Each channel covers a power range from 1% to 125% of rated power. Four trip circuits are provided to serve as:

1. A downscale interlock to prevent rod withdrawal if the meter is not "on scale",

2. A "high flux warning" and rod block and flow change block to warn the operator if a preset high flux trip level is reached and,

3. A "high flux scram" to initiate reactor shut-down in the event a still higher flux level is reached,

4. An inoperative trip which provides a scram trip and rod and flow block trip if the instrument is inoperative (e.g. operate-calibrate switch is out of "operate").

The downscale interlock will serve to give an early warning of amplifier malfunction. A rod block and flow change block is associated with the "high flux warning" alarm trip to prevent the operator from increasing power by further rod withdrawals or flow increase or decrease. This alarm trip is automatically biased by the recirculation flow signal to provide core protection by preventing rod withdrawals or flow increase or decrease to power levels for which flow is insufficient.

Bypassing of the APRM instrument channels is discussed in Section X-5.

c. Calibration System

The APRM system will be calibrated to read percent of rated thermal power using conventional heat balance techniques.

The power distribution monitoring instrumentation will be calibrated using data obtained from the Traveling In-Core Probe (TIP) calibration system and heat balance data such that the individual amplifier readings will be proportional to the average heat flux in the fuel rods which surround the in-core chamber at the same elevation as the chamber.

Each local power range assembly of ion chambers contains a pressure containing tube for insertion of calibration equipment. Several complete TIPs are provided for calibration purposes. Each TIP system consists of a miniature ion chamber, flux amplifier, readout equipment, electro-mechanical drive cable, remotely operated drive unit, indexing device, valve assembly and required guide tubing. This system represents a considerable improvement over the wire insertion calibration systems used in the past. TIP system operation is considerably faster and permits immediate cross calibration of the in-core monitors.

A total of five insert guide tubes are provided which pass from the reactor building into the primary containment. Within the primary containment, the indexer mechanism provides access to fifty tubes into the reactor vessel. That portion of the tube within the reactor vessel is closed at the end, thus forming a long thimble. The tubes into the reactor building are closed by means of a valve.

When the TIP System cable is inserted the valve of the selected tube opens automatically and the chamber and cable are inserted. The ion chamber is then moved through the tubing into the core, flux is plotted on an X-Y recorder, and the chamber retracted to start position in one automatically controlled operation. Insertion, calibration and retraction of the chamber and cable requires approximately five minutes. Retraction requires a maximum of 1-1/2 minutes. A maximum of five valves may be opened at any one time to conduct the calibration and any one guide tube is utilized approximately one hour per year.

If closure of the valve is required during calibration, the isolation signal causes the cable to be retracted and the valve to close automatically on completion of cable withdrawal.

The design pressure of the insertion guide tube within the reactor vessel is 1250 psig. The guide tube between the reactor vessel and the containment penetration is designed for 75 psig external pressure. The insertion guide tube system is fabricated in accordance with the intent of the ASME Boiler and Pressure Vessel Code, Section III.

4.3.4 Instrumentation Sub-Systems Integration

During the startup of the plant to rated power, the three instrumentation sub-systems are integrated by interlocking to provide the overlap and insure proper coverage of the reactor operation. At startup

reactor mode switch is positioned in "Startup." In order to withdraw the first rod, all source range and intermediate range chambers have to be fully inserted into the core or the rods are blocked. The count level is procedurally set and must be determined if adequate by the operator.

Between approximately 5×10^3 up to 10^4 and 2×10^5 counts per second, the rod block is relieved so that the chamber can be retracted but the count rate is maintained in this range to prevent the rods from being blocked. In this way, the operator has period information up to 10% power. The operator must maintain the count rate in excess of 5×10^3 to 10^4 cps and less than 2×10^5 cps to prevent the occurrence of a rod block when in the startup mode.

The intermediate range becomes active at a minimum of one decade before the source chambers are retracted. Above the first range position of the intermediate range instrument, the downscale trip becomes operative which gives a rod block. The high flux alarm also provides a rod block; thus the operator has to maintain the intermediate range instrument reading between these two limits. Therefore, scram protection is always less than a decade from the operating level.

The transition between the intermediate and the power range requires that the power range monitor be "on scale" before the mode switch can be changed to "Run" or a rod block results. In the "Run" mode the intermediate range detector can be retracted from the core and the intermediate range downscale trip is bypassed. Also, the intermediate range high flux is bypassed if the power range monitor is "on scale" with mode switch in "Run."

5.0 REACTOR PROTECTION SYSTEM

(Same as Unit 2 PDAR as amended)

The reactor protection system is a high integrity process parameter sensing and logic system which controls the actuation of the control rod drive system to shut the reactor down and controls the actuation of the primary containment isolation valves.

5.1 Performance Objective

The objectives of the reactor protection system are to:

a. Monitor reactor and plant systems.

b. Override plant operating and control systems to take required action as follows:

(1) Shut down the reactor when established limits are reached.

(2) Initiate operation of standby cooling systems.

(3) Initiate closure of the primary containment isolation valves.

5.2 Bases

The basis of the foregoing objectives for the reactor protection system is the need to prevent damage to the reactor fuel. Damage to the fuel can be prevented by shutting the reactor down or in the event of the loss of coolant accident by initiating operation of the standby cooling systems. The reactor operating limits established in Section IV provide the bases for the design of the reactor protection system.

Under certain postulated, low probability combinations of equipment malfunctions and/or operational errors, the potential for fuel damage may exist. For this reason a primary containment system is provided. Closure of the primary containment system isolation valves by the reactor protection system is required when a potential for the release of reactor fission products exists.

5.3 Description of System (See Figures 39, 40, 41, and 42)

The reactor protection system contains two channels, both of which must be de-energized to produce a reactor scram or other protective functions. The two channels are physically separated in the control room and clearly identified to minimize the probability of an accidental shutdown such as by maintenance operations. Each channel has at least two independent tripping devices from each measured variable. Only one device must operate to trip the channel in which it is connected, but both channels must trip to cause a scram. The scram function is preserved since one of the two elements of a given measured variable can fail to operate and a scram is still assured. Electro-mechanical relays are used as the "Logic Elements" of the system.

Each sensor circuit is capable of being tripped independently by simulated signals for test purposes to verify its ability to give a single-channel trip. This does not cause the other channel to trip and thus permits testing during operation. Hence, this provision is a convenient and positive means for checking and maintaining the system reliability without interrupting continuity of electrical production.

A channel trip annunciation is given if either channel trips from either of its two series contact chains. One window is provided for each channel. Periodic visual checks will be performed to verify that both series strings will operate properly when called upon. The annunciator circuits are self-monitoring, i.e., opening of a contact initiates an alarm.

An event recorder is provided in the control room to identify and record the trip functions of each process variable associated with the protection system. The recorder assists in identifying and analyzing the abnormal plant operations by recording the sequence of occurrence of the various trip events.

The parameters which are utilized to scram the reactor, close isolation valves, and initiate other protective actions have been chosen on the basis that where practical they represent direct process variables, and that either singly or in combination they will effect the appropriate protective actions. The set points for the various sensors will be established when the final design and system performance and operating characteristics are known. These set points will take into account appropriate margins between the operating limits and the real or safety limits.

Each scram trip is designed "fail-safe" insofar as practicable, i.e., most probable component failures (including power supply failure) or open circuit in wiring causes a trip condition.

The following abnormal conditions will initiate a scram:

a. High Neutron Flux - This limits the heat flux to a level well below that which could cause fuel damage. Four power level monitors are connected in each of the two channels.

b. High Reactor Pressure - This scram signal limits the rise in core power due to pressure rise. Continued pressure rise following the scram implies an interruption in steam flow and emergency condenser and relief valving operation will be initiated to cool the core. Further increase in pressure will cause steam relief through the safety valves.

c. High Drywell Pressure - Abnormal rise in pressure could indicate a rupture of, or excessive leakage from, the primary system within the drywell. In addition to scram, isolation of the drywell is initiated.

d. Low Reactor Water Level - This scram signal assures that the reactor will not be operated without sufficient water above the core. Continued decrease in level will trip the recirculation pumps, initiate core spray cooling, and close the drywell vent and isolation valves. If continued decrease is experienced simultaneously with high drywell pressure containment spray cooling will be initiated.

e. Scram Dump Tank High Level - This scram signal assures that the reactor will be operated with sufficient free volume in the drive system scram dump tank to receive the control rod drives discharge upon scram.

f. Low Condenser Vacuum - This scram signal assures that the reactor will not be operated without its main heat sink. It is planned to use four sensors, two in each channel, to provide uniformity in testing practice and optimum isolation of the two channels.

g. Reactor Mode Switch in Shutdown - If the keylock reactor mode switch is turned to "SHUTDOWN," the reactor will scram.

h. Main Steam Line High Radiation - The radiation monitor on the steam line in the tunnel will scram the reactor with a high radiation signal.

i. Loss of All AC Power to the Protection System - The reactor will be shutdown with loss of protective surveillance.

j. Closure of Main Steam Isolation Valves - This scram signal assures that the reactor will not be operated without its main heat sink.

k. Manual - Both channels are tripped by two mechanically coupled manual push buttons. Separation of the manual scrams in the two channels is to allow individual testing.

The system functions which scram the reactor, close isolation valves, and initiate other protective actions are shown in Figures 40 and 41.

Isolation Valves Control Circuitry

In order to meet the various operational and safety criteria associated with the various isolation valves for the reactor steam and auxiliary system (Section V-3, 5), the following general rules have been followed in the design of control circuitry for the valves.

a. Failure of any single component or power supply shall not prevent isolation of any drywell effluent line.

b. Loss of all AC power shall not initiate main steam line isolation valve closure.

c. Loss of all AC power shall not prevent initiation of main steam line isolation.

d. All isolation signals are fed into the dual-redundant protection system logic relays for confirmation and trip action.

e. Manual switches on the Control Panel in the Control Room back up all trip signals for all valves.

f. Manual reset is required after trip in order to restore normal conditions.

Mode Switch

A master keylock selector switch is provided which interlocks various critical control functions dependent upon the plant operating status. The switch is placed manually in one of the following positions, which puts into effect the corresponding control functions:

a. SHUTDOWN - Reactor Scram initiated and control rod drives power off.

b. REFUEL - Permit withdrawal of one control rod with refueling platform interlocks in operation.

‡ c. STARTUP AND STANDBY - Bypass of scram on condenser vacuum and main steam line isolation valves.

‡ d. RUN - No bypass - all protection systems in full function.

Interlocks

‡ The interlocking functions are provided to assist the operator in controlling the plant and have no reactor protection function beyond the assist to procedural control. As a result, an operator-interlock relationship provides redundancy in assuring proper plant operation. Sufficient information is provided to the operator to allow operation of the plant without the interlocks making the operator the first level of redundancy. The condition and source of an interlock is made known to the operator by lights and annunciators.

‡ Control rod drive interlocks are provided to rod withdrawal when any one of the following conditions exist:

‡ a. Scram accumulator low pressure or high level (two accumulators): Assures adequate pressure for control rod scram.

‡ b. One rod withdrawal permissive with mode switch in Refuel Mode: Allows the withdrawal of a single control rod during this mode if no fuel is over the reactor.

‡ c. SRM detector position and count level: Requires that chamber be inserted before startup, or count level between 10^3 and 10^5 counts/second as chamber is retracted.

‡ d. SRM channel inoperative: Assures adequate neutron monitoring capability before startup.

‡ e. IRM detector fully inserted in the startup mode: Assures adequate neutron monitoring capability during startup.

‡ f. IRM downscale except on lowest scale: Assures monitor downscale to startup and onscale during its range of coverage in order to provide adequate neutron monitoring capability during startup.

‡ g. IRM upscale-alarm level: Assures adequate neutron monitoring coverage during startup by preventing rod withdrawal if monitor has attained alarm level and assists operator in avoiding scram trip of IRM.

‡ h. APRM downscale in Run Mode: Assures adequate neutron monitoring capability during power operation.

‡ i. APRM upscale trip which varied with recirculation flow: Prevents withdrawal of rods to keep power level within preset limits defined by power and recirculation flow.

‡ j. Scram dump volume high water level: Assures adequate volume available to accept dump water during reactor scram.

k. Rod worth minimizer: Assures proper rod withdrawal pattern.

l. Loaded refueling platform hoist or grapple over the reactor: Prevents control rod withdrawals during refueling if fuel is above the reactor.

The design of the rod interlocking circuit takes into consideration the normal modes of failure. The relays in the circuit are normally energized which, upon loss of power, would break the continuity of the circuit blocking rod withdrawal. The possibility of failure due to welded contacts is guarded against by making loads well within contact rating.

‡ Independence is maintained in the rod block function by providing signal sources which energize
‡ the rod selection relays independent of the signal sources which energize the rod withdrawal relays. Two
‡ of the four SRM's, four of the eight IRM's and four of the eight APRM's provide energizing signals to the
‡ rod solution relays. The remaining SRM's, IRM's and APRM's provide energizing signals to the rod
‡ withdrawal relays.

The bypassing of a SRM or IRM channel also bypasses the rod block interlock functions from that channel as well as the interlock from chamber position. The number of SRM's or IRM's that can be bypassed is limited to one of the five SRM's and two of the IRM's except the two cannot be in the same quadrant or both in the central group of four.

Relays

a. The deenergized condition of relays shall not cause bypass of any protective function.

b. Where contact welding could bypass a protective function, more than one contact shall be placed in series.

Bypasses and Failures

The design philosophy for the safety and control systems requires that, for those accidental power transients with the potential for endangering the health and safety of the public, the system provides, in addition to containment, at least a double level of automatic or inherent protection. For other incidents at least a single level of automatic or inherent protection is provided by these systems.

Accidental power transients may occur from either of two sources. Gross core transients may be induced by reactor primary system disturbances of core boundary conditions, i.e., coolant flow, coolant subcooling or reactor pressure. Localized power transients may develop from movement of core components, i.e., control rod motion or fuel element movement during refueling.

There are no mechanisms within the direct control of the operator or mechanisms which control primary system conditions which can cause power transients which could endanger the health and safety of the public. In the unlikely event of multiple malfunctions or failure of equipment and erroneous operation, transients due to control rod motion or duel element drop may, in the worst cases, result in a nuclear excursion. In these cases reactivity addition rates may approach five dollars per second and reactor periods may be as short as a few milliseconds. The inherent Doppler effect terminates the excursion and engineered safeguards and system isolation limit the consequences to levels which do not endanger public health and safety. Scram, initiated by signals from safety instrumentation, is of value only in providing negative reactivity for shutdown following the power burst of the excursion. Thus as stated in Section IV-5.0, "...single component failure within the reactivity control system itself does not result in damage either by motion or rupture to the reactor primary coolant system".

Bypassing of individual protective system signals is only allowed in those conditions where adequate protection is afforded by the reactor's condition and by other signals.

a. Reactor Startup

Bypassing is allowed on the reactor protection system to avoid scram signals from those inputs which are not normal during the start-up phase of operation. These include a "Dump Volume High Water Level" signal, a "Low Condenser Vacuum" signal, and a "Main Steam Line Isolation Valve Closure" signal. In order to close the scram dump valve, terminating flow into the scram dump tank so the tank can be drained, the scram dump tank high water level scram can be bypassed. But an interlock prevents rod withdrawal on high scram dump tank water level. These bypasses are removed as soon as start-up proceeds to the point where these inputs become normal for an operating reactor. Removal of the bypass is forced by the operating "Mode" switch and other interlocks making it impossible to operate at a significant power level without protection. No allowable bypass in combination with a single equipment malfunction or operator error can lead to an accident causing fuel damages.

b. IRM

Bypassing is allowed on the Intermediate Range Monitors. In this case, there is an excess of monitors over that required to satisfy the basic input requirements of a Dual Bus Protection System. There are eight IRM's and only four are needed. Consequently the operator is allowed to bypass one on each of the two protection buses provided the two are not in the same quadrant. The bypassing is interlocked so that the above considerations must be met. After the Average Power Range Monitors are on scale and the reactor is at substantial power, the IRM's no longer serve a safety function that is not better met by the APRM's. Because of this the

IRM's are bypassed in the "Run" mode so long as the APRM's located in the same quadrants are reading up-scale. Assuming that two IRM's are bypassed and another one malfunctions, the reactor is still protected by five IRM's. There is no likelihood of an accident to fuel damage at this low power level.

The intermediate range instrumentation is capable of generating a trip signal used to initiate automatic actions to prevent fuel damage (1) due to single operation errors or equipment malfunction occurring during any low or intermediate range operation. For the worst possible combination of instrument bypass and startup rod withdrawal, the intermediate range instrument system is capable of generating a scram signal before the bulk fission power of the reactor exceeds 0.1% of rated power and before the power density of any region in the reactor exceeds 5% of the average power density at rated power.

c. APRM

For bulk transients inertia of the reactor system restricts rate of reactivity addition to the core from coolant or pressure transients to, at most, a few tens of cents per second. Resulting reactor periods are on the order of seconds or longer. Power increases generally throughout the core. These transients are automatically terminated by the safety system by scram before core damage occurs. A dual bus safety system is used, and a trip signal from one instrument channel in each bus actuates a scram.

As with the IRM's, there are eight APRM's when only four are needed to satisfy the needs of the Protection System. The operator is allowed to bypass one on each of the two protection buses provided the two are not in the same quadrant. The bypassing is interlocked so that the above considerations must be met. Assuming that two APRM's are bypassed and another one malfunctions, the reactor is still adequately protected by five channels. Under the worst combination possible within the above assumptions, there are still six valid pairs of scram signals from the eight channels to protect the reactor against gross power level damage. The system is capable of generating a scram signal during bulk neutron flux level transients before the actual bulk neutron level of the reactor exceeds 120% of the rated value or the value which results in an adequate margin for partial flow conditions. This is accomplished by assuring that at least one active instrument channel is still situated in each region of the core, full scram protection is maintained in the event of gross core power distrubances.

---

(1) Fuel damage is defined as perforation of the fuel cladding which would permit release of fission products. The mechanisms which cause fuel damage in reactor transients are:

a. Severe overheating of the fuel cladding caused by inadequate cooling.

b. Fracture of the fuel cladding due to strain caused by relative expansion of the UO_2 pellet.

The critical heat flux which defines the onset of the transition from nucleate boiling to film boiling is identified as the limit, below which fuel damage due to overheating will not occur.

A value of 1% plastic strain on the Zircaloy cladding is identified as the limit below which fuel damage due to overstraining the fuel cladding is not expected to occur. The heat flux to cause this amount of clad strain is approximately 600,000 Btu/hr-ft^2.

Under the same conditions of bypass and inoperative chambers the APRM system is capable of generating a signal to prevent rod withdrawal and to prevent flow changes in order to prevent fuel damage occurring from a local power disturbance during the worst single rod withdrawal due to operator error or equipment malfunction starting from any permitted power and flow conditions. Every region of the core is protected by APRM units connected to separate safety logic channels.

If a single channel is bypassed the other APRM in that quadrant would sense a high neutron flux and block rod withdrawal at neutron flux levels well within design. Additionally, procedural controls dictate rod withdrawals which keep operating conditions well within design conditions.

For the limiting local flux disturbance, the worst condition rod withdrawal, one APRM channel in each of the two reactor protection system channels will respond sufficiently to initiate a rod withdrawal block before fuel damage occurs. The rod withdrawal block is initiated by any single APRM trip, thus fuel damage is prevented even if one of the adjacent APRM units is bypassed. Analyses of the APRM system response in a large BWR using the same instrument arrangement criterion has shown that the local power distrubance from a worst case rod withdrawal is limited by the rod block device to less than fuel damage levels.

5.4 Reliability

The Dresden Dual Bus Protection System has a theoretical reliability equivalvent to a 1 out of 2 or a 2 out of 3 system. The dual bus system can be tested frequently to insure that no unsafe failures lie dormant which would impair its ability to function. The testing can be carried out at full power or zero power, exactly duplicating all conditions as they are in the reactor when the protecting system may be called on to function.

The dual bus protection system adapts more readily to the control rod drive hydraulic scram circuitry that a 2 out of 3 system and appears to yield a higher reliability with fewer component parts. Thus, the dual bus is preferred for General Electric power reactors.

Relays are used as the main building blocks because they are reliable, not hyper-sensitive to environments and excesses of stress, and adaptable to conventional contact signal inputs.

The dual bus is sub-divided into four parts to allow ample opportunity for circuit isolation. Sensors are treated as isolated inputs to the protection system. Further backup is provided so that even in the unlikely event that all rods do not scram, the unscrammed rods will also be inserted.

Theoretical Considerations

The dual safety system employed on Dresden 1 and planned for Dresden 3 evolved from the single bus system which had been in use on many experimental reactors prior to the advent of power reactors.

The single bus system had for many years been accepted as the standard of safety and simplicity. The guiding rule of design was that a single component failure must not be allowed to prevent a scram. This let logically to redundancy, wherein two (2) or more devices were used to measure a parameter, either one of which could initiate a scram independently of the other. This is frequently called a 1 out of 2 protective system.

Safe failures, by their very nature, reveal themselves. In a 1 out of 2 system, a safe failure initiates a scram. An unsafe failure is unrevealed until a test is initiated to cause the system to operate. On the average, the unsafe failure exists for a length of time equal to half the interval of time between testings.[1]

Consider a 1 out of 2 system tested once per week. The unreliability of the system is the fraction of the time that the system is incapable of responding properly to a bonafide scram signal. This relationship is shown on Figure 60, the unreliability being plotted as a function of the failure rate for various systems.

The 1 out of 2 system, although considered excellent from the standpoint of safety, leaves much to be desired from the standpoint of continuity of operation. Unnecessary scrams, in addition to being costly and annoying to a utility, produce unnecessary safety hazards of their own.[2] The Dresden Dual Bus Protection System was designed to effectively solve this continuity of operation problem and at the same time make a substantial contribution to safety.

The Dresden Dual Bus Protection System is a basic 1 out of 2 system repeated twice (1 out of 2) x (2). From a theoretical standpoint (refer to Figure 60), the unreliability of the 1 out of 2 system is one-half the dual bus system. This difference, though insignificant in itself, is unreal. In order to test a 1 out of 2 system, the reactor must scram or be shut down. This procedure is unsatisfactory from several standpoints.

1. A test of a reactor protection system which is shut down is never quite representative of an operating reactor. A test schedule should be established and followed whether the reactor is up or down.

2. Shutting the reactor down for test of the protection system cycles the reactor through stresses and strains, which, though properly designed for, are unnecessary. The full-power steady-state mode is the safest of all reactor operating modes.

3. The utilities insist on continuity of operation, not at the expense of safety, but in addition to and enhancing safety.

Any tendency to decrease the test frequency to minimize shutdown time increases unreliability. On a 1 out of 2 system changing from once per week to once per month increases the unreliability by a factor of approximately 19 as shown by the curve on Figure 60.

---

(1) Pearson, A., and Lennox, C.G., The Technology of Nuclear Reactor Safety, Volume 1, Thompson and Beckerley, Editors, Chapter 6, Sensing and Control Instrumentation, Page 296.

(2) Epler, E.P., Reliability of Reactor Systems, Nuclear Safety, 4 (4): 72-66 (June, 1963).

It is of interest to compare on this same theoretical basis the unreliability of other protection systems. The 2 out of 4 system has the least unreliability, and significantly so. Furthermore, since the expression involving λ, the failure rate, is cubed, the unreliability drops more rapidly with decreasing failure rate.

The 2 out of 3 system has a slightly higher unreliability than the Dresden Dual Bus Protection System, but not significantly so. The 2 out of 2 system, long ago rejected as a reactor protection system, is shown for reference. It is worthy of note that at a failure rate of 0.1 per year, the unreliability of the 2 out of 2 system is three (3) orders of magnitude higher than the 2 out of 3 or the Dresden Dual Bus System. A failure rate of 0.1 per year is indeed a worthy goal.

Practical Considerations

The theoretical analysis of a protection system can be useful in choosing a system with good potential; but the final design of a system should be guided by many additional factors. Some of the considerations included in the design of the system are:

1. Is the protection system compatible with the types of inputs usually available?

2. Is the logic comples, difficult to trace or understand, or prone to hide unsafe failures due to redundant circuits?

3. Does the logical decision centralize onto one critical component or circuit, the failure of which could void the integrity of the protection system?

4. Can the various redundant branches of the protection system be isolated from all influences that might cause certain failure modes to be interdependent?

5. Is the protection system unduly affected by heat, moisture, or any other influence that may be impossible to isolate?

6. How much experience has been encountered with similar designs or components?

The following philosophy will give some background on the choice of the Dresden Dual Bus Protection System.

Many of the inputs to a protection system originate directly from simple, reliable, and proven devices which use electrical contacts as their output. Furthermore, these signals originate from systems that may be operating at different electrical potentials. Relays were chosen as the building blocks for the protection system because they readily accept contact signals and work effectively to isolate one potential source from another.

Once relays have been selected, it behooves the designer to keep the logic simple, because complex logic can quickly cascade into a very large number of contacts and relays, all of which can contribute to unreliability. Simple logic has the added advantage that it is easier to understand by technicians charged with its care and maintenance and easier to test without fear of ambiguity. Relays are not prone to fail upon being subjected to short term excesses of temperature or voltage.

Although there is a wear-out failure mechanism built into a relay, the number of operating cycles in a protection system lifetime is so low as to be of little concern.

To the maximum extent possible, simple series circuits of contacts, any one of which tripping causes scram, should be used. Parallel circuits should be avoided because of the difficulty of testing them. For redundancy a whole redundant string of contacts is employed terminating in a separate relay rather than paralleling each individual contact with a redundant contact. These precautions tend to make most failures self-annunciating and the unsafe failures can readily be discovered by testing.

Once the logical decision has been made to scram the reactor, this decision should not be entrusted to a single circuit or component. On this unit, the logical decision to scram is not made in the electrical circuits at all, but in the hydraulic system of the control rod drives. The decision is made individually and simultaneously for every control rod. Two (2) "fail safe" scram pilot valves are employed on each control rod drive. Both of them open to cause a scram of that particular rod. Failure of both of them to open does not in any way influence the ability of any other rod to scram.

The hydraulic scram circuit of the control rod drive is ideally suited as a multiple terminal point for the dual bus protection system. In 1964, a failure mode analysis was made of the scram pilot valves. The reference design two-valve system was compared with a scheme using four (4) valves suitable for a 2 out of 3 protection system. The four (4) valve 2 out of 3 scheme had one-half the unreliability of the reference design two valve system. Doubling the number of valves to cut the unreliability in half is a poor investment in redundancy. Ordinarily one should demand and expect orders of magnitude improvement by doubling the amount of equipment. As a consequence of this and other analyses, the 2 out of 3 protection system was not considered to be as suitable for application in this reactor as the dual bus protection system.

The number and location of sensors coupling into the dual bus protection system receive careful consideration. There is only one reactor pressure, and once it is measured no new information is generated by measuring it again. However, on a dual bus protection system four measurements are required to satisfy the need for four independent inputs. Every care is taken to see that the inputs are truly independent. For example, they are not connected to a common header or located in such a way that they are vulnerable to the same hazards. Although more than four inputs can be accommodated readily on a dual bus system, very little improvement in safety is realized from inputs in excess of four, especially if the four inputs have a high reliability to begin with.

Some parameters have a spatial distribution. Common examples are temperature and neutron flux. If only the worst case is of concern and the designer can be assured that a sensor can readily be located at the point that is known to be worst case, then four sensors are adequate. For example, it may be established that the worst case temperature is the outlet temperature in a given flow loop. If there is only one loop, four sensors should suffice. However, if there are multiple loops, the problem compounds into supplying many more sensors to assure that the worst case is discovered with adequate redundancy. If there are "n" outlets, this may mean 4 x n sensors.

A more troublesome problem in sensor location is in neutron flux monitoring. A sensor located outside the core monitors only the leakage neutrons and this neutron flux is not likely to be representative of the worst case conditions. In this situation, increasing the number of chambers without limit may not appreciably improve one's knowledge of the true in-core worst case conditions. In these circumstances, a knowledge of flux distributions gained from other sources must be utilized in order to choose the minimum

number of sensors. With the sensors located within the core, there must be a minimum of 4 x n sensors, where "n" is the number of volumes in the core which must be treated as independent volumes.

The Dresden Dual Bus Protection System terminates in four independent groups of pilot scram valve solenoids. The circuitry is so arranged that no single component failure can prevent all four groups from being de-energized. This scram circuit separation has the added benefit that some of the groups of rods have a high probability of scramming even if two or more failures have prevented the scram from being unanimous. The probability that enough failures can coincidentally accumulate to prevent any rods from being scrammed is very low. In the event that only a portion of the rods scram, a back-up scram valve functions to insert all the unscrammed rods. Although this back-up scram valve does not insert the rods as rapidly as the regular scram valve, it does serve to insure that all rods eventually go in.

Any channel may be tested at any time. If the reactor is operating, the test will result in one bus being tripped. This is frequently referred to as a half scram. The half scram de-energizes half of the scram pilot valve solenoids. With a half scram effective, one rod may be scrammed completely by means of a toggle test switch which de-energizes one only scram pilot valve solenoid in the opposite bus. The reactor operating at power is tolerant of one rod scram. The Dual Bus Protection System allows a test to encompass everything from sensor input to a rod scram with an absolute minimum of artificiality. This testability precludes the possibility that a hidden unsafe fault could lie dormant and undetected for long time intervals. Testing at power also enhances the probability that the test is truly representative of the reactor's ability to scram at full power. (By the same argument, testing will also be done at zero power to assure that the reactor will scram under these conditions.)

The manual scram signal is entered into the protection system downstream and independent of all other monitored process variables. Each bus has its own scram button and independent circuit allowing the manual scram capability to be tested during full power operation. The scram buttons are located side by side and both must be depressed to effect a bonafide manual scram.

5.5 Surveillance and Testing

The dual channel reactor protection system described on the preceding page results in a system having high reliability and with excellent safety features combined with a very low expected incidence of false operations due to component failure. It uses standard components with simplicity in design which results in reduced maintenance. A better comprehension of system operation by maintenance personnel results. Complete electrical and physical separation of each tripping circuit is provided to reduce possible malfunction during maintenance and testing. The periodic tests are normally conducted during plant operation and without loss of plant protection.

Each senson circuit is capable of being tripped independently by simulated signals for test or maintenance purposes to verify its ability to give a single-channel-trip without causing a scram. Failure to restore normal signals to sensor circuits after test is guarded against by making failure conspicuous to operating personnel and adequate check off procedures followed (or lock provided).

6.0 TURBINE PLANT CONTROL AND INSTRUMENTATION

(Same as Unit 2 PDAR as amended)

6.1 Turbine Control System

Control and supervisory equipment for the turbine generator are conventional and are arranged for remote operation from the turbine generator control panel board or console in the control room. In addition, turbine oil pressure and steam extraction pressure are transmitted to receivers on the panel board. Normally, the initial pressure regulator controls steam admission valve position to maintain constant reactor pressure. The ability of the plant to follow system load is accomplished by adjusting the reactor power level, either by regulating the reactor recirculating flow or by moving control rods. However, the turbine speed governor can override the initial pressure regulator, and the steam admission valves will close when an increase in system frequency or a loss of generator load causes the speed of the turbine to increase. In the event that the reactor is delivering more steam than the admission valves will pass, the excess steam will be bypassed directly to the main condenser automatically by pressure-controlled bypass valves.

A single pressure regulator, with a backup regulator, is used to control both the turbine admission valves and the turbine bypass valves. The two valves are coupled together by a linkage system.

Normally, the bypass valve is held closed and the pressure regulator controls the turbine valves utilizing all the steam production to make electrical power. If the governor or load limit reduces the steam flow to the turbine, the regulator controls the system pressure by opening the bypass valve. If the capacity of the bypass valves is exceeded when the governor or load limit reduces the steam flow to the turbine, the system pressure will rise and scram the reactor.

The second, or back-up, pressure regulator is provided to take over control of pressure in the event that the operating regulator should fail. The set point of the back-up pressure regulator is normally a few psig above the set point of the operating pressure regulator.

The linkage system also contains a mechanical stop arrangement (lift limit) which limits the total steam flow to a value less than the sum of the maximum capacities of the turbine control and bypass valves. This mechanical stop will be made adjustable with a maximum position stop at about 110 percent of rated turbine steam flow.

The turbine control includes the customary speed governor, over-speed governor, steam admission valves, emergency stop valves, and initial pressure regulators.

6.2 Condensate System

The condensate pumps operate unthrottled to overcome system resistance and supply positive suction to the reactor feedwater pumps. Discharge pressure of the condensate pump is indicated and a pressure switch on the discharge header initiates starting of an additional condensate pump on low pressure.

Conductivity of condensate downstream of the demineralizer is measured, recorded and actuates an alarm on high conductivity. A modulating control valve, located downstream of the gland seal condensers and steam jet air ejector inter- and after-condensers, recirculates condensate back to the condenser on low loads. This maintains a minimum cooling flow through the condensate pumps, and the inter- and after-condensate, and the gland seal condenser.

A low vacuum trip on the condenser is provided to scram the reactor. Condenser hotwell level and vacuum are recorded. Abnormally high or low hotwell and low condenser vacuum are annunciated.

Condensate flow is measured and used to control recirculation. Low condensate pressure is annunciated.

Hotwell level is controlled automatically by making up water from the condensate storage tank, or by rejecting condensate to the tank.

6.3 Feedwater System Control

Water flow to the reactor vessel is controlled by a three-element level control system. This system uses measurements of steam flow to turbine, feedwater flow to reactor, and reactor water level to modulate feedwater flow control valves in order to maintain water supply to the reactor in direct proportion to the reactor steam output and to hold reactor water level constant.

Each reactor feedwater pump has conventional throttling recirculation controls which pass feedwater back to the condenser when feedwater flow to the reactor is below minimum flow required to cool the pumps.

Reactor water level, feedwater-flow rate, and steam flow rate are recorded in the control room. High and low reactor water level is annunciated.

Each reactor feed pump is shut down automatically on low suction pressure.

6.4 Makeup Water Control

The makeup water control system consists of the condensate storage tank with local and remote level indicators. Makeup water to the condensate storage tank is supplied from the makeup demineralizer. Normally, the flow is to the condenser for purpose of deaeration. As the hotwell level rises, surplus water is spilled to the condensate storage tank.

6.5 Turbine Protective Devices

If the turbine should overspeed due to sudden loss of electrical load, the speed governor signal will override the initial pressure regulator signal which normally controls the turbine admission valves. The admission valves will then close sufficiently to maintain satisfactory turbine speed. This closure will cause the steam to be dumped to the condenser through the bypass valves.

An emergency overspeed trip is also provided as a back-up device to close the main stop valves.

Other standard turbine protective devices are included.

XI. SAFETY AND ACCIDENT ANALYSES

XI. SAFETY AND ACCIDENT ANALYSES

1.0 INTRODUCTION

Previous sections have described the plant systems and plant control and safety features. In this section, the ability of the plant to withstand procedural and equipment failures is described, and potential accidents are analyzed in order to demonstrate the effectiveness of the plant safety features in mitigating the release of radioactive materials to the environment.

2.0 ANALYSIS OF INCIDENTS

The following is a discussion of failures, malfunctions and operator errors which result in abnormal situations or operating inconvenience. No off-site effects result from any of these occurrences.

Combinations of failures, malfunctions and errors which might result in release of some fission products from the fuel rods are discussed in a later section as "Design Basis Accidents".

2.1 Continuous Control Rod Withdrawal

(Same as Unit 2 PDAR as amended.)

Design features provided to minimize the probability of inadvertent continuous control rod withdrawal and to limit potential power transients in the event they should occur include the following:

1. The control system is designed so that only one rod can be withdrawn at a time. (1)

2. Normal rod operation is a step (notch) at a time. Two control switches must be held open at the same time to withdraw a rod continuously. (1)

3. The continuous rod withdrawal rate is limited by the control rod hydraulic flow system to three inches per second. (2)

4. Interlocks prevent rod withdrawal if the neutron flux monitors are not in a condition to provide the required protection, or if the rod withdrawal timing relay should fail. (3)

5. Preplanned withdrawal patterns and procedural controls are used to prevent abnormal configurations resulting in rod worths above a nominal 0.025 $\Delta k/k$. (1)(4)

6. A control rod worth minimizer will back up operating procedures to prevent withdrawal of rods in patterns which would result in rod worths more than a nominal 0.025 $\Delta k/k$. (1)(4)

7. Intermediate and power level scrams prevent power excursions from low reactor power levels. During power operation, in-core monitor alarms warn the operator if local neutron flux levels approach preset limits. (5)

2 1.1 Continuous Control Rod Withdrawal at Source Level

The results of a preliminary analysis of a continuous control rod withdrawal from source level are presented below. The assumptions used in this analysis are:

1. Initial reactor fission power level is 10^{-8} times rated and the core is barely subcritical.

2. Fuel and moderator temperatures are initially at $68^{o}F$.

3. The maximum reactivity addition rate, with a reference maximum worth rod of 0.025 Δk, is 0.0019 Δk/second. This rate is assumed to apply over the entire rod withdrawal.

(1) See Section X-3.
(2) See Appendix B. Section 2.5.
(3) See Section X-5.3.
(4) See Section IV-5.3.
(5) See Section X-4.3.

4. Although neutron flux scrams would be initiated at a low power level, scram is assumed not to be initiated until 120 percent of rated neutron flux was reached. Control rod motion started 0.2 seconds after the scram signal.

5. The negative Doppler reactivity effect from fuel heating is the only inherent shutdown mechanism acting to turn the resulting nuclear excursion. Control rod scram becomes effective prior to the appearance of negative reactivity effects from moderator heating and void formation.

The results of this analysis indicate that the power transient would be turned by the Doppler reactivity effect before control rod scram could significantly affect the power generated in the transient. The minimum reactor period would be about 30 milliseconds and reactor power would reach a peak level of 4500 MW. Energy generation during the transient would total about 530 MW-second in the high power density region. This energy generation would increase the fuel temperature at the hottest point to 2500°F. Thus, neither fuel melting or cladding damage occurs as a result of this excursion.

2.1.2 Continuous Control Rod Withdrawal at Power

If a control rod were withdrawn near a region which is approaching one of the normal operating limits, the adjacent hot channel critical heat flux ratio can approach 1.5 at the time the control rod is 45 percent withdrawn. If the rod were to reach 75 percent withdrawn, the critical heat flux ratio could approach 1.0, and the center temperature of the highest power pellets could approach melting. Before the rod could have been withdrawn 75 percent, however, the total core power would have increased sufficiently such that rod withdrawal would have been blocked by power range monitors. Thus, procedures are supplemented by automatic protection to prevent fuel damage.

2.1.3 Control Rod Withdrawal With Flow Rate Mismatch

The reactor design will provide load following capability. By varying the amount of recirculation flow, the operator can change power level. The power resulting at a given value of recirculation flow is determined by the values of the void and Doppler coefficients. As the recirculation flow rate is reduced, the power level will reduce automatically such that the amount of power being generated can always be safely handled by the coolant flow. The critical heat flux margin increases as the power is dropped by flow control. Rod withdrawal with the reactor in this low-flow, low-power operating state could result in a reduction of the minimum critical heat flux ratio below design limits before the rated power high flux scram would occur. Consequently, operating procedures will require lower maximum power limits as a function of reduced coolant flow. In addition, an electrical interlock system prevents control rod withdrawal when the reactor power is above the design limit at any reduced flow condition.

2.2 Cold Water Additions

(Same as Unit 2 PDAR as amended.)

A cold water addition incident is postulated, namely the starting of a pump in an idle recirculation loop which has been allowed to cool down. A reduction in the temperature of the core inlet water will cause an increase in neutron flux. An increase in recirculation flow will cause an increase in neutron flux. These two effects are combined in the postulated accident, resulting in the most severe cold water incident.

If one recirculation loop is shut down during operation (inadvertently or for minor maintenance, for example), the idle loop is normally kept hot by keeping the suction and bypass valves open. To postulate a cold water accident, the procedural error of closing one of these valves, allowing the water to cool in the loop, is assumed.

Electrical interlocks prevent starting of the recirculation pump unless:

1. The suction valve is open;

2. The discharge valve is closed; and

3. The small bypass valve, around the discharge valve, is open.

The cold water addition transient has been analyzed, assuming, in addition, that the electrical interlocks fail and that the operational procedure prohibiting starting the recirculation pump with both main valves open is violated.

The pump motor and generator combination is designed for a startup frequency of approximately 5 cps (approximately 9 percent of rated speed). When running at high speed, the generator is incapable of supplying the large starting current required by the pump motor, due to the large reactance drop and starting friction of the pump thrust bearing. Nevertheless, it is conservatively assumed that the starting frequency is equivalent to 20 percent of rated speed.

The limiting cold water addition incident can be described briefly as follows:

The reactor is at approximately 70 percent power with one recirculation loop in operation. The idle loop has 150°F water, approximately the temperature in the drywell. The valves are opened and the pump is started. The total recirculation flow quickly increases about 10 percent. This increase in flow coupled with the low temperature of this increased flow will cause the neutron flux to increase sharply, perhaps to scram level. A relatively minor transient of this type requires the actual plant model, not yet available, to give meaningful results. Extrapolating from analyses of other plants, the cold water transient will be of small magnitude of only minor consequence.

2.3 Coolant Recirculation Malfunctions

(Same as Unit 2 PDAR as amended.)

A very fast decrease in recirculation flow can momentarily decrease the minimum critical heat flux ratio (MCHFR) because of the delay of the surface heat flux in following the rapid decrease in neutron flux. Hence, for a short period of time, a condition of reduced coolant flow and high surface heat flux will exist. A rapid decrease in recirculation flow can be caused by any one of the following:

1. Loss of electrical power to an auxiliary bus, to which is connected one of the two motor-generator sets which supply power to the pump motors.

2. Loss of electrical power to both auxiliary buses, which would trip both motor-generator sets.

3. A pump shaft seizure which suddenly reduces the speed of one pump to zero.

4. A malfunction in the recirculation flow control system.

2.3.1 Loss of Pump Power

The flow coastdown following a loss of power to the recirculation pumps is slow because of the large flow and rotational inertias. The inertias of the rotational equipment are at least twice that of a non-jet pump reactor.

An analysis of a non-jet pump reactor gave the following results:

1. MCHFR of about 2 for one-half of the pumps tripped, which does not result in a scram (typical for one of two recirculation loops for jet pump plant);

2. MCHFR of about 2 for all of the pumps tripped and reactor scram from loss of power.

The same reactor model with two jet pump recirculation loops showed slower decay of recirculation flow in both cases and higher flow during the time (one to two seconds after the trip) when the MCHFR normally is a minimum for pump trips. The MCHFR's for these cases are undoubtedly greater than for the non-jet pump cases.

A more accurate value of the MCHFR for this plant will be available when the final design work is more complete. Fuel thermal limits will not be reached upon trip-off of one or two recirculation pumps when the reactor is at its reference design thermal output.

2.3.2 Pump Stall

Instantaneous stoppage of a recirculation pump due to a shaft seizure would more rapidly decrease the recirculation flow than a one pump trip would. Within the first two seconds, when the lowest MCHFR would occur, the flow decrease would be even faster than for a two pump trip, resulting in a lower MCHFR. In a typical plant model, starting at the reference design thermal output, a flow decrease equivalent to a one pump stall on a jet pump plant caused a MCHFR of 1.3. A transient MCHFR of 1.0 or greater prevents the fuel from exceeding fuel thermal limits. Thus, the fuel cladding will not be damaged. A more accurate value of the MCHFR will be generated from the final design model.

2.3.3 Flow Control System Malfunction

The rate of change of recirculation flow is limited at two different points in the flow control system. The controller, using the differentiated generator speed signal, limits the maximum rate of change of recirculation flow to 0.55 percent per second. This limits the maximum rate of change of reactor thermal power to 0.5 percent per second. Additionally, the rate at which the speed controller of the fluid coupler can be varied is physically limited to a value equivalent to a maximum rate of change of recirculation flow of 1.5 percent per second. This is approximately one-sixth of the maximum rate of decrease of flow compared to the one pump trip case. Therefore, even if the controller fails and the speed adjuster rod moves at its maximum speed, the resulting rate of change of recirculation flow amounts only to a fast maneuver, well within the capability of the reactor.

Should this assumed malfunction occur in the direction to increase recirculation flow, starting at less than rated flow, there will be no significant neutron flux overshoot because the slower rate of increase

Should this assumed malfunction occur in the direction to increase recirculation flow, starting at less than rated flow, there will be no significant neutron flux overshoot because the slower rate of increase of fluid coupler torque near rated speed results in a slow approach to full speed. Beginning at approximately 90 percent speed, the rated speed is approached essentially asymptotically.

2.4 Control Rod Drive System Malfunction

(Same as Unit 2 PDAR as amended.)

In the event of most types of control rod drive failure, safety is provided by the number of rods available for control, and by the fact that in the hot, operating condition, many rods at random could fail without impairing the ability to shut down the reactor. Even in the cold, clean condition, the reactor can be held subcritical if one rod of maximum worth is withheld from the core. In addition, the standby liquid control system can be used to hold the reactor subcritical. The protections preventing rapid removal of a control rod from the core are discussed in Appendix B.

2.4.1 Control Rod Drive Hydraulic System Failure

Loss of normal control rod drive power to a single rod would not create a serious condition and the reactor could be shut down. The rod drive hydraulic power is obtained from one of two full-capacity pumps. The loss of one of these pumps would be annunciated and the remaining pump would be actuated. Complete loss of normal drive power would be expected only with loss of unit auxiliary power, which would scram the reactor. Such a loss of normal drive power would not affect the power for scram insertion of the rods, which is obtained from the stored pneumatic energy in the accumulators and/or from reactor pressure when the reactor pressure is between 500 and 700 psig.

Accumulator failures would not interfere with the ability to shut down the reactor promptly. Only one rod would be affected by the loss of one accumulator. When the reactor is in the pressurized operating condition, rods could still be scrammed by reactor pressure through a port controlled by the rod drive internal shuttle valve. Even if the reactor were not pressurized, the control rod drive system would still insert the rod with the failed accumulator at normal speed. Pressure switches are used to monitor pressure on each accumulator and low pressure is annunciated. Interlocks prevent control rod withdrawal in the event of low pressure in the accumulator charging header. See Appendix B.

2.4.2 Control Rod Drive Latching

Failure of a control rod drive to latch is possible in the event of multiple breakage of collet fingers and/or failure of the collet return spring. Failures of these types have never occurred in the drives of similar design now in service.

Other causes of latching failures could be excessive foreign material or air in the drive. Foreign particles could potentially jam the collet piston and prevent latch operation. Trapped air in the hydraulic system could cause a drive to skip one or two steps before latching. The latching mechanisms are designed to minimize the possibility of such failures. The drives and hydraulic system are thoroughly cleaned, and air is flushed and vented out prior to initial operation. Drive hydraulic system water is filtered as it is pumped into the system and reactor water inlets to the drives are protected with screens. Experience has shown that these precautions prevent latching difficulties. Even if a drive should fail to latch, the consequences would be mild. The drive would only drift out at a rate on the order of 1/10 as fast as normal withdrawal speed, and if not stopped by the operator with an "insert" signal, reactor power would increase until high flux annunciation and manual or automatic scram resulted or the drive reached the end of its travel. The rate of reactivity addition would be considerably less than for the previously considered continuous rod withdrawal incidents. See Appendix B.

2.5 Steam Valve Failures

(Conforming amendment of Unit 2 PDAR required where indicated by ‡.)

2.5.1 Inadvertent Isolation Valve Closure

Switches on the main steam line isolation valves will scram the reactor if a valve on each line is closed more than 10%. This ensures that the reactor is operated at power only when the main heat sink is available. The valve closure time will be in the range of 3 to 10 seconds to minimize the coolant loss following a steam line break. See Section V-3.5. Preliminary analysis indicates that a 3-second closure rate of the isolation valves, with the reactor initially at rated power, will cause the reactor pressure to rise to exceed the relief valve's pressure tentatively set at 1120 psig. With an overshoot of approximately 30 psi, the peak pressure will not trip the safety valves, which will be set at around 1190 psig. The isolation condenser, set at 1060 psig, will, after the automatic 15 second time delay, begin dissipation of the stored reactor energy and decay heat. Thus, only a limited amount of steam will be dumped to the pressure suppression pool.

2.5.2 Turbine Control or Stop Valve Closure

Several turbine generator protective devices can close the turbine stop and/or control valves and will simultaneously cause the bypass valves to open. Closure of either turbine stop or control valves shuts off the turbine steam flow so fast that the transients caused by closure of either set of valves is approximately the same. Hence, the discussion on stop valve closure applies to a control valve closure.

The bypass valves, rated for 40 percent rated flow, cannot prevent scram if the initial steam flow is much greater. The transient was analyzed on a typical plant model. For the worst transient, it was assumed that the turbine was operating at rated steam flow when the stop valve closed. The neutron flux rose quickly to scram level due to the pressure rise in the core. Scram limited the neutron flux spike to approximately 40 percent above rated. The short duration flux spike had a negligible effect on surface heat flux. The pressure peaked at 65 psi above the operating pressure. The relief valves, tentatively set to be actuated at 100 psi above operating pressure, were not actuated. This incident is discussed further in Appendix G.

2.5.3 Turbine Control or Stop Valve Closure Combined with Bypass Failure

Tentatively, the 40 percent bypass capacity will be made up of eight 5 percent capacity valves. Failure of one valve to open upon a turbine trip should cause only slightly higher flux and pressure peaks. However, if the assumption is made that all the bypass valves fail to open when the stop valve trips with rated turbine steam flow, the pressure will rise high enough to trip the pressure relief valves set at 100 psi above the operating pressure.

On a typical plant model, the neutron flux spike was almost 100 percent above the reference design neutron flux, but of such short duration that the surface heat flux increased only slightly, approximately 2 percent. The pressure at the relief valves peaked at 120 psi above the starting pressure, which is 60 psi below the expected setting of the first safety valve.

2.5.4 Failure of a Safety Valve to Reseat

If one of the steam line safety valves should fail to reseat following operation, pressure could fall below normal and the reactor would cool down. The maximum rate of cooldown if a safety valve were stuck fully open would be approximately 10° F per minute, which is allowed by the ASME Pressure Vessel Code as an infrequent event.

2.6 Loss-of-Coolant Accidents

(Conforming amendment Unit 2 PDAR required where indicated by ‡) ‡

Coolant could be lost from the reactor process system as a result of mechanical failure of one of the various pipes providing flow to or from the reactor. The primary protection against such occurrences is the use of accepted design codes to provide a conservative design and proper installation and testing. If a failure in the system nevertheless occurs, provisions are made to continue core cooling to minimize the possibility of fission product release. Section XI-3.4 discusses the results of the event in which the core cooling provisions are not completely effective.

2.6.1 Process System Ruptures Inside the Primary Containment

The consequence of a reactor process system leak or rupture would depend on its size. The full range of coolant loss rates up to that resulting from a double-ended recirculation line rupture has been investigated. The loss of coolant at a rate equivalent to that from a double-ended recirculation line rupture (Section XI-3.4) results in the highest fuel and cladding temperatures.

Small leaks would be dtected by drywell temperature rise and the drywell sump level buildup. It is estimated at a 300 pound per hour steam leak would be apparent from drywell temperature rise, and that event smaller leak rates could be detected from observation of sump level buildup.

With coolant loss rates up to the capacity of the feed pumps, reactor water level would be maintained with these pumps until system pressure was reduced to about 160 psig. Core cooling would then ‡
be continued with the core spray cooling system or the shutdown cooling system, depending on the location of the break. See Section V-3.7.

The effects on the reactor core of coolant loss accidents in excess of the feedwater capacity have been investiaged. The sequence of events for the assumed loss of coolant is as follows:

The loss of coolant lowers the water level in the vessel until scram, isolation and core spray cooling systems are tripped by a low level indication. Even though it is tripped, the core spray flow will not start until the reactor pressure drops below 160 psig. The feedwater system increases the feed flow ‡
rate from normal to maximum in trying to hold reactor water level. The water level in the vessel continues to fall. The active core is well cooled by the surrounding mixture until the water reaches the top of the core. As the water level falls through the core, the cooling of the core continues to be adequate due to the boiling associated with the vigorous flashing of the liquid in the core. After the net volume of liquid loss exceeds the liquid volume above the bottom of the core, the core is considered void of liquid water and cooling is considered inadequate. Actually, the core would not be uncovered yet because of some void formation in the coolant below the core. Therefore, the assumed length of time of inadequate cooling is exaggerated.

Partial cooling is considered to be re-established when the pressure drops below 845 psig, at which time the 200,000 pounds of liquid in the lower plenum begin flashing vigorously to form a steam-water mixture which floods the core entirely as the pressure continues to fall.

After the pressure reaches 845 psig and bulk coolant begins to flash, the steam-water mixture which covers the core will improve the cooling until the pressure decays to about 500 psig. At this pressure, little water will exist in the core region, and the cooling is considered to be inadequate. Finally, the pressure will decay to a pressure below 150 psig and core spray cooling will begin. See Section V-3.7.

These analyses show that the maximum fuel and cladding temperatures occur for the double-ended recirculation line rupture (maximum coolant loss rate) described in Section XI-3.4.

2.6.2 Process System Ruptures Outside the Primary Containment

Isolation valves are used to limit coolant loss in the event of primary system ruptures outside the drywell. Isolation valves close rapidly enough to prevent core uncovering following a gross break in a line outside the drywell, and slow enough to prevent safety valve actuation due to high pressure following an accidental isolation valve closure. In the event of failure of the isolation valves, the core cooling systems would provide core cooling as discussed in Section XI-2.6.1 above.

Low water level in the reactor initiates closure of isolation valves in the main steam lines and containment isolation. Local pressure or temperature sensors are used to initiate closure of appropriate isolation valves in the event of a break in a main steam line, isolation condenser inlet or outlet, cleanup system or shutdown cooling system line. Major leaks or ruptures in the turbine or rupture of the turbine exhaust diaphragm and loss of condenser vacuum or other turbine malfunction would cause closure of the turbine stop valves and/or steam line isolation valves, limiting potential steam release.

A main steam line rupture would be the most severe loss-of-coolant outside the drywell because ruptures in other systems outside the drywell would release less coolant from the reactor before isolation. A major rupture of the main steam line is analyzed in Section XI-3.3.

2.6.3 Tube Failure in an Isolation Condenser

Failure of a tube in one of the isolation condenser tube bundles would be detected by high temperature or radiation monitor alarms.

A failed tube bundle could be isolated by manual actuation of the motor-operated valves from the control room. The isolation condenser could continue to operate on the remaining bundle and the other isolation condenser would continue to operate. Even if both isolation condensers were to be isolated, reactor cooling could still be accomplished by operation of the steam relief valves, with makeup water supplied via the feedwater system.

2.7 Other Equipment Failures

(Conforming amendment of Unit 2 PDAR required where indicated by ‡.)

2.7.1 Loss of Feedwater

If the feedwater system should malfunction so as to terminate feedwater flow, the core inlet subcooling and core power will decrease and a low reactor water level trip will scram the reactor and close the isolation valves. After the isolation valve closes, the resulting transient would be similar to the "Inadvertent Isolation Valve Closure" (Section XI-2.5.1) but starting at a lower power level. The water level would remain above the top of the fuel.

2.7.2 Loss of Main Condenser Vacuum

To protect the reactor against a loss of heat sink, a decrease in condenser vacuum to 23 in. Hg will scram the reactor. A further decrease to 20 in. Hg vacuum will close the turbine stop valves. Finally a decrease to 7 in. Hg will close the bypass valves, isolating the reactor. Since the reasonable minimum time for the vacuum to drop from 20 in. Hg to 7 in. Hg is 8 seconds or more, the incident is comparable to that in Section XI-2.5.1, "Inadvertent Isolation Valve Closure," which uses a similar valve closure time.

2.7.3 Loss of Auxiliary Power

‡ Auxiliary power is supplied by the unit auxiliary transformer and the startup auxiliary transformer
‡ with approximately 50% load split. These supply power to pumps of all types, the safety equipment, etc.
‡ It is very improbable that both electrical power sources would be lost simultaneously because each is sup-
‡ plied from a different source. Nevertheless, the loss of all auxiliary power is assumed. See Section VII-2.

The coastdown of the recirculation pumps will decrease reactor power rapidly. In addition, in a few seconds the reactor will be scrammed and the steam line isolation valves closed as the reactor protection system motor-generator sets coastdown and the voltage decays sufficiently to permit the relays on the reactor protection system to drop out. It is expected that isolation by closure of turbine stop and bypass valves due to loss of condenser vacuum will be slower than isolation valve closure because the coastdown of the main condenser cooling water will be offset by the decreasing turbine steam flow which follows the decreasing reactor power. Therefore, the transient will be less severe than that discussed in Section XI-2.5.1 "Inadvertent Isolation Valve Closure."

At no time will loss of auxiliary power prevent scram since stored pneumatic energy and reactor pressure are the means of driving in the control rods. Also, standby and stored energy are available for emergency operation of reactor instrumentation, isolation valves, core spray pumps, and other critical systems.

2.7.4 Instrument Air Failure

Should the instrument air compressors fail, a scram would occur in the several minutes when the compressed air storage tank pressure fell. This scram would be caused by the "fail-safe" feature of one of several air-operated devices, such as the scram valves on the control rod drive system.

2.7.5 Loss of Electrical Load

In the event of complete loss of rated electrical load such as by generator or line circuit breaker trip, the moderate speedup of the turbine due to entrained steam would cause the speed governor to close the turbine control valves. The high closure rate of these valves makes this transient the same as discussed in Section XI-2.5.2 "Turbine Stop Valve Closure." Loss of partial load would produce a less severe transient.

2.7.6 Failure of Turbine Pressure Regulator

The turbine pressure regulator can be assumed to fail in either of two ways: opening the turbine control and bypass valves, or closing them.

A pressure regulator failure causing rapid closure of the turbine control and bypass valves is essentially the incident discussed in Section XI-2.5.3. "Turbine Stop Valve Closure Combined with Bypass Failure."

In the second case, the pressure regulator can cause the turbine control and bypass valves to open fully. A load limiting device in the turbine controller limits the total turbine and bypass steam flows to 105% of rated steam flow. The initial reactor power level can be at any value up to referenced design thermal output. The lower the initial power, the faster the reactor is depressurized by the increased steam flow. The worst case is when the reactor is at hot standby power when the malfunction occurs. Flashing caused by the decrease in reactor pressure will cause reactor power to decrease and the coolant water level to rise. If the reactor pressure decrease is limited to less than 100 psi, the water level will not rise to the steam dryers and no significant water carryover will result. Two methods are under study for limiting the pressure drop: a low pressure regulator, which will assume control on low steam pressure, or a pressure switch to close the turbine stop and bypass valves automatically on low steam pressure. If necessary, one of these features will be added to prevent significant water carryover.

2.7.7 TIP System Guide Tube Failure

When the TIP system cable is actuated the valve of the selected tube opens automatically and the chamber and cable are inserted. Insertion, calibration, and retraction of the chamber and cable requires approximately five minutes. Retraction requires a maximum of 1-1/2 minutes. A maximum of five valves may be opened at any one time to conduct the calibration, and any one guide tube is utilized approximately one hour per year.

If closure of the valve is required during calibration, the isolation signal causes the cable to be retracted and the valve to close automatically on completion of cable withdrawal.

If a failure were to occur to the section of the guide tube located within the reactor vessel during a time with the valve open, it has been calculated that a total of approximately 1.2 pounds of steam-water would leak through the tube to the reactor building while the cable is being withdrawn. If the tube were to fail within the drywell at a time the drywell was pressurized from a loss of coolant accident and also during a time with the valve open, it has been calculated that a total of approximately 0.3 pound of steam would leak through the tube to the reactor building while the cable is being withdrawn.

3.0 DESIGN BASIS ACCIDENTS

Accidents with a potential for release of fission products from the core are described in this section. The incidents described in the previous section evaluate the consequences of individual failures or malfunctions of equipment or operator errors. The plant is so well protected that most failures do not even result in fuel damage. The worst incident, rupture of a pipe or valve on a high pressure line inside the drywell, results in minor cladding perforation but no significant fission product release. In order to evaluate the ability of the containment to protect the public following more massive releases of radioactivity, a number of accidents, which could occur only following multiple equipment failures, are analyzed herein. These accidents are not anticipated, but are considered in order to include the far end of the spectrum of challenges to the containment system.

3.1 Control Rod Drop

3.1.1 Introduction

(Same as Unit 2 PDAR as amended).

The control rod drop accident is defined as a power excursion caused by the accidental removal of a control rod from the core at a more rapid rate than can be achieved by the use of the control rod drive mechanism. In the control rod drop accident, a fully inserted control rod is assumed to fall out of the core after becoming disconnected from its drive and after the drive has been removed to the fully-withdrawn position.

The plant is designed to a safety criterion requiring that vessel integrity be preserved for reactivity insertion accidents. Thus, the maximum control rod operating worth will be limited so that a control rod drop will not damage the reactor vessel. Operational procedures and a control rod worth minimizer will be used to limit the maximum worth of any control rod. The maximum free-fall velocity of a control rod will be limited by the rod velocity limiter. See Section X-3.1.4.

3.1.2 Protection Resulting from Design and Operational Procedures

(Same as Unit 2 PDAR as amended)

Following are some of the design features and operating procedures which minimize the probability of a rod drop accident or which act to limit the consequences of an accident of this type.

1. The control rods are carefully designed to minimize the probability of sticking in the core. The blades of the control rods travel in gaps between the fuel channels with approximately 1/4 inch clearance and are equipped with rollers which make contact with the channel walls. See Section IV-5. Rods of similar design are now in use in a number of operating reactors and periodic inspections have revealed no tendency for blade distortion or swelling from service in the reactor environment and could potentially lead to rod sticking.

2. The control rod coupling to the drive shaft and other control rod drive improvements which have been made over early designs significantly reduce the probability of an accidental separation of a rod from a drive. See Section X-3.1.3 and Appendix B. Couplings of this design have undergone extensive tests under simulated reactor conditions and also at

conditions more extreme than those expected to be encountered in reactor service. They have been operated through thousands of cycles of scram operation and a separation has never occurred. Tests have shown that the coupling will not separate when subjected to pull forces up to 30 times greater than can be applied with a control rod drive.

3. Movements of the control rods when the reactor is critical or near critical cause changes in the neutron flux. Rod coupling is verified by observing the neutron flux changes during rod movement.

4. The control rod bottoms on a seal, preventing the control rod drive from being withdrawn to its overtravel position. Thus, attempting to withdraw a control rod drive to the overtravel position provides an effective method for verifying rod coupling. This method is used prior to reactor startup when rod following cannot be verified by observing the response of the neutron flux instrumentation.

5. Operating procedures require rod following verification checks during startup and during major rod movements and daily verification checks on all rods not full-in to insure that any rod-from-drive separation would be detected. Procedures require full insertion of rods when following cannot be verified.

6. Operating procedures require that control rod movements follow preplanned patterns designed to flatten the power distribution which tends to minimize the reactivity worth of individual rods so that extensive fuel damage would not be expected if a rod drop were to occur.

The following two safety devices will be used to augment the above procedural controls and further guarantee system safety.

1. A control rod worth minimizer interlock system consists of a computer which monitors the control rod withdrawal sequence and actuates interlocks to prevent abnormal control rod patterns giving rod worths above a nominal 2.5% Δk. See Section X-3.

2. A rod velocity limiter is provided on each control rod. The limiter is a hydraulic piston on the bottom of the control rod which adds substantial drag against downward control rod movement. This device limits the rod drop velocity withdrawal to 5 ft/sec maximum. See Section X-3.

3.1.3 Results of Excursion Analysis

(Same as Unit 2 PDAR as amended)

Figure 79 shows the results of a parameter study of the variation in the peak fuel enthalpy (heat content) following a 0.025 Δk rod drop accident as a function of the initial moderator density. The moderator density is chosen as a convenient variable to indicate the state of the reactor. In these analyses the assumption is made that prior to the excursion the heat flux is in equilibrium with the neutron flux. For this not to be the case, the reactor would have had to be operating on a very short period; shorter than the characteristic period for heat transfer from the fuel rods, which is of the order of several seconds.

The peak enthalpy which exists at the end of the excursion before any significant heat transfer from the fuel to moderator has taken place consists of the sum of two components, the enthalpy that was added during the excursion and the enthalpy that was present prior to the excursion. The reference enthalpy is 0 cal/gm at 20°C.

The trends shown in Figure 79 clearly indicate that the hot standby condition is worse than any full power or partial power condition as the starting point for an excursion accident.

At hot standby the power level is very low (assumed to be 10^{-6} of rated) and the fuel temperature is essentially in equilibrium with the moderator (286°C). Initial fuel enthalpy is about 20 cal/gm uniformly distributed throughout the core and across each fuel rod. The postulated excursion adds a maximum of about 180 cal/gm. Peak fuel enthalpy in the hottest fuel segment is, therefore, about 200 cal/gm, including the effects of gross axial, radial and local (interbundle) power peaking factors characteristic of the excursion geometry. The enthalpy distribution across the fuel rods is initially flat and remains flat throughout the excursion (adiabatic approximation).

For accidents occuring at rated power it is assumed that the hottest fuel rod in the region which surrounds the postulated dropped control rod is initially running at the core average power level. This is a conservative assumption since the fuel in which the maximum enthalpy is deposited during the excursion is initially operating significantly below rated power due to the presence of the inserted control rod. At the core average heat flux, the volumetric average fuel temperature is about 530°C, which corresponds to a fuel enthalpy of about 35 cal/gm. At the core average heat flux, the peak fuel temperature at the center of the fuel rod is about 670°C or about 45 cal/gm. The nuclear excursion adds about 50 cal/gm to the initial peak fuel enthalpy resulting in a final peak fuel enthalpy of 95 cal/gm. Again, this represents the highest fuel enthalpy in the core since the excursion energy increment includes the axial, radial and local power distributions and the initial fuel enthalpy represents the centerline enthalpy of the peak single rod in the excursion zone.

A comparison of the accident at hot standby with one at rated power shows that while the latter case has a higher initial fuel enthalpy, the enthalpy added during the excursion is much smaller, 50 cal/gm rather than 180 cal/gm. The smaller energy increment added at power is due primarily to two factors. These factors are (1) the higher initial power which makes the Doppler coefficient more effective through immediate sensible heating of the fuel and (2) the flatter or less peaked power distribution which exists at the lower moderator densities characteristic of power operation. The magnitude of the Doppler coefficient in the two cases in essentially the same since the reduction of Doppler coefficient in the two cases is essentially the same since the reduction of Doppler coefficient at power due to higher fuel temperature is offset by the inverse dependence of the coefficient on moderator density. (Figure 83).

The maximum rod worth of 0.025 Δk was used for the entire range of reactor states shown in Figure 79. The constraints of thermal limits and reduced number of rods in the core at operating power, however, will preclude rod worths of this magnitude existing in the core at power. Therefore, the maximum peak fuel enthalpy at power, resulting from the drop of a rod of less worth, will be less than that shown in Figure 79. The trends of peak enthalpy as a function of rod worths below the 0.025 Δk maximum may be seen from Figure 62. (See Appendix D).

In the analyses presented below the reference 2.5% Δk maximum worth control rod was assumed to be dropped out of the core at the reference design rate of five feet per second, while the reactor was at hot standby, 10^{-6} times reference design neutron flux, with an initial fuel temperature of 547°F. This combination of control rod worth and rod dropout velocity results in a reactivity insertion rate of 3.80% Δk/second.

The resulting power transient was terminated initially by the Doppler reactivity effect. The additional reactivity effect from moderator heating or void formation occurred later and was not included in the analysis. Control rod motion was assumed not to start until about 0.2 seconds after scram signal at 120% of reference design neutron flux.

The power transient is calculated to have a minimum reactor period of 8.4 milliseconds. The total energy generated in the excursion is 4000 MW-seconds (1.8 full power seconds) with a peak power of 10^5 MW. Of the total energy release, about 30 MW-seconds results from metal-water reaction. The metal-water reaction is estimated from TREAT facility data.[1,2] This metal-water reaction results in the formation of 90 scf of H_2.

From a rod drop at hot standby, excursion energy is distributed in the fuel such that about 50 pounds of UO_2 (in 330 fuel rods) have enthalpies greater than 170 cal/gm, which is estimated to be the threshold of eventual fuel cladding damage. Since the fuel enthalpy is not above 220 cal/gm there will be no fuel melting. The maximum UO_2 enthalpy is 200 cal/gm. This is far below the 425 cal/gm estimated threshold for immediate rupture of fuel rods from UO_2 vapor pressure.

3.1.4 Fission Product Release from Fuel

(Same as Unit 2 PDAR as amended)

Fission product release estimates for this analysis are based on the following assumptions:

1. The reactor has been operating at the reference design thermal output until 30 minutes before the accident occurred.

2. The reactor fuel has an average irradiation time of 500 days at the reference design thermal output.

3. A maximum of 1% of the noble gas activity and 0.5% of the halogen activity in a fuel rod are assumed released from the rods experiencing cladding perforation. These estimates of maximum plenum activity are based on measured activity releases from fuel with failed cladding in operating reactors. Dresden Unit 1 experience has shown that . . .

1. Liimatainen, R.C., et al., "Studies of Metal-Water Reactions at High Temperatures" ANL 6250
2. "Reactor Development Program Progress Report" ANL 6904 - May 1964

a) Some of the fission gases, both radioactive and non-radioactive, leak from the fuel lattice into the plenum between the UO_2 fuel and the cladding. The half-lives of most fission gases are short compared to the duration of reactor operation and activity buildup in the plenum, so the gases in the plenums are predominantly non-radioactive.

b) The release rates of noble gases and halogens from the fuel are dependent on the fuel density, operating temperature, fracture or crumbling status of the fuel and the gas pressure in the plenum. If the fission gas release rates from the UO_2 are known, the fission gas buildup in the plenum can be calculated.

c) The release rate of noble gases into the fuel plenum can be estimated from the measured release rate of noble gases from failed fuel in an operating reactor, Dresden Unit 1. A failed fuel rod is one which has experienced a break in cladding integrity, from a small hole to a circumferential severance. With variation in reactor power, water-steam can leak into fuel rods operating with failed cladding and cause leaching of fission products from UO_2 or deterioration of UO_2. This increased release of fission gases from the fuel will cause an overestimation of gas buildup in the fuel plenum and therefore will make this calculation conservative. When the fuel cladding is unbreached the gases released into the plenum cause a pressure buildup which retards release of additional gases into the plenum. This decrease in fission gas release due to back pressure does not occur when the cladding is breached, so this calculation, based on the measured release from failed fuel, is conservative. The release rate of fission gases from failed fuel rods during Dresden Unit 1 operation, which operates at about the same peak and average fuel temperatures as Unit 2 fuel, and has about the same fuel density, is measured to be below 1000 μc/sec of halogens (both measured after 30 minutes decay).[1] If the number of fuel rods with cladding failures is actually greater than those verified, the release per fuel rod is even less and this calculation is that much more conservative.

The mixture of fission gases from the perforated rods is between the recoil mixture (immediate release upon formation - no holdup for decay) and the diffusion mixture (some holdup for decay). The diffusion mixture, which is weighted toward long-lived isotopes is used in the calculation for additional conservatism.

The equilibrium buildup of fission gases in the fuel plenums is calculated using the following equation:

$$A_o = \frac{R_A}{\lambda_A}$$

(1) Williamson, H. E., and Rowland, T. C., "Performance of Defective Fuel in the Dresden Nuclear Power Station," APED-3894, 1962.

Where,

A_o = Equilibrium activity of isotope A in plenum (curies)

R_A = Release Rate of isotope A from fuel (c/sec)

λ_A = Decay constant of isotope A (sec^{-1})

$$= \frac{0.693}{\left(T_{1/2}\right)_A}$$

Since Kr-85 has a 10.4 year half-life, no credit was taken for decay in the plenum. Assuming 1000 days of buildup of Kr-85 in the plenum, its radioactivity is calculated by

$$A_o = 1000 \text{ day } 8.64\,(10)^4 \frac{\text{sec}}{\text{day}} R_A$$

The total noble gas activity (Kr-85 and shorter half-life isotopes) in the plenum of one rod is calculated to be 54 curies. The total noble gas activity in one fuel rod is 8700 curies. Therefore the noble gas plenum radioactivity in a fuel rod is less than 1% at equilibrium.

The radiogas buildup in the fuel rod plenums occurs over a period of years. The reactivity excursion included in the accident analysis sharply increases the fuel temperature above operating conditions, followed by rapid cooling to below operating temperatures in a few seconds. The short period of increased fission gas diffusion rates at the higher fuel temperature is negligible compared to the extremely long time at operating temperatures, and results in a negligible release of radioactivity from fuel.

The fission products generated in the excursion are negligible compared to those due to long-term operation. After the excursion, the following quantities of fission products would be released to the reactor water from the 330 fuel rods with damaged cladding:

Fission Product	Amount Released (curies)
Noble Gases (Xe, Kr)	44×10^3
Halogens (Br, I)	23×10^3

3.1.5 Containment of the Released Fission Products

(Conforming amendment of Unit 2 PDAR required where indicated by ‡)

At hot standby the plant is normally isolated from the turbine condenser and cooled with the isolation condenser. If a rod drop occurred while the isolation condenser system was in use, fission products released from the fuel would be completely contained in the reactor primary system with no release to the environs. However, the turbine by-pass system could be used to maintain reactor pressure constant by passing steam to the turbine condenser. This mode of operation is assumed for the postulated rod drop excursion. Less than two full power seconds of energy are produced in the excursion, of which approximately 3% could be released promptly and the rest released at the eight to

nine second fuel conduction heat transfer time constant. Therefore, the increase in steam flow to the condenser is easily handled by the turbine bypass system without a significant pressure transient in the reactor or in the condenser.

The fission products released from the fuel are contained by the reactor vessel, steamline piping, turbine, condenser, and offgas system. Since only a fraction of the released noble gases would be absorbed in the reactor water, all are assumed to pass to the turbine condenser system. The released halogens would be absorbed in the reactor water. Measurements of halogen concentrations in the Unit 1 reactor coolant water (with very similar coolant chemistry, temperature and pressure) and condensate show that the halogen concentration ratio in steam to water is in the range of 3×10^{-5} to 10^{-5} (Section XI-4.3). The water carryover fraction is less than 10^{-3} at full steam flow rate, and the steam flow from this accident would be much less than rated. Since the halogen partition between steam and water is so large, essentially the only halogens carried out with the steam are those dissolved in the entrained water. If 8.5×10^{-5} of the water in the vessel is carried out with the steam, then about 2.0 curies of halogens are transported from the reactor vessel.

The fission products are carried through the main steam lines through the turbine to the condenser. The noble gas activity will be monitored in the main steam lines and upon a high radioactivity signal the steam line isolation valves will be closed automatically. As backup to the high neutron flux scram during the excursion and the steam line high radioactivity scram, the valve position switches on the main steam line isolation valves also initiate a reactor scram before the valves are closed. Additionally, low condenser vacuum would scram the reactor at 24 inches mercury absolute condenser pressure.

The noble gases reaching the condenser would remain airborne in the condenser. During hot standby either the off-gas ejector or the mechanical vacuum pump will be in operation to maintain condenser vacuum. It is more likely that the off-gas air ejector system would be in operation. If it were, the noble gases would be drawn into the off-gas piping with 30 minutes holdup and would trip the high radiation automatic off-gas system isolation. This would trap the noble gases between the two off-gas system isolation valves. For this analysis it is assumed that the vacuum pump system is in operation. This system has a higher pumping rate, only a few minutes holdup, and does not have automatic isolation on high radiation. The operator, who would have been informed of the non-standard condition by the reactor scram and isolation, could shut off the pump and close the valve, trapping the noble gases in the condenser. Nevertheless, it is assumed that the noble gases are released via the vacuum pump and 310 ft. stack. The 90 scf of H_2 formed by the Zr-water reaction is well within the vacuum pump system capacity. The noble gases mix with any other gases in the condenser and are removed at the vacuum pump design flow rate of approximately 5000 cfm. The stack release rates for the noble gases are summarized below.

Time After Accident	Stack Discharge Rate for Noble Gases curies/second
0.1 second	67
30 minutes	3.9
3 hours	6×10^{-5}
10 hours	~ 0

Most of the halogens reaching the condenser would be absorbed in the water in the condenser hot-wells. An equilibrium would be established between the halogens in the condenser air space and the halogens in the condenser water. Experiments (1, 2) have yielded partition factors (water concentration/air concentration) from 10^5 to 10^2. For this analysis, the partition factor is assumed to be 10^2. The condenser vapor space volume is 55,000 ft^3 and the water volume is 11,000 ft^3. With the vacuum pump exhaust rate of 5000 cfm, no filtration, and only 1.75 minutes holdup in the piping, the stack gas release rates are:

Time After Accident	Stack Discharge Rate for Halogens curies/second
0.1 second	1.5×10^{-4}
30 minutes	1.2×10^{-4}
3 hours	5.7×10^{-5}
10 hours	6.3×10^{-6}
1 day	1.0×10^{-7}
3 days	1.6×10^{-13}
10 days	0

3.1.6 Radiological Effects

(Conforming amendment of Unit 2 PDAR required where indicated by ‡)

The method for calculating the doses to off-site persons is shown in Section XI-4.3. The doses are calculated for meteorological conditions: very stable condition with a 2 mph wind, moderately stable condition with a 2 mph wind, neutral diffusion conditions with 2 and 10 mph winds, and unstable diffusion conditions with 2 and 10 mph winds. Two sets of calculations are performed, one taking credit for wind direction diversity and the other taking no credit for it. The following table summarizes the calculated radiological effects on the combined release rates given above. The largest of these exposures is well below those listed in 10 CFR 100, 25 rem whole body and 300 rem thyroid.

1. L.C. Watson, et al, AECL 1130, "Iodine Containment by Dousing in NPD-II", Oct. 1960
2. H.R. Diffey, et al, "Iodine Cleanup in a Steam Suppression System", International Symposium on Fission Product Release and Transport Under Accident Condition - 4/65

TABLE XI-1

RADIOLOGICAL EFFECTS OF THE ROD DROP ACCIDENT[1]

Distance (Miles)	First 2 Hours Exposure						Total Accident Exposure					
	VS-2	MS-2	N-2	N-10	U-2	U-10	VS-2	MS-2	N-2	N-10	U-2	U-10
Passing Cloud Whole Body Dose (rem)												
1/2	2.9×10^{-2}	3.1×10^{-2}	3.1×10^{-2}	8.4×10^{-3}	3.1×10^{-2}	6.5×10^{-3}	2.9×10^{-2}	3.1×10^{-2}	3.1×10^{-2}	8.4×10^{-3}	3.1×10^{-2}	6.5×10^{-3}
1	1.3×10^{-2}	1.7×10^{-2}	1.6×10^{-2}	6.3×10^{-3}	1.6×10^{-2}	4.3×10^{-3}	1.3×10^{-2}	1.7×10^{-2}	1.6×10^{-2}	6.3×10^{-3}	1.6×10^{-2}	4.3×10^{-3}
5	- (3)	-	-	4.5×10^{-4}	-	1.9×10^{-4}	2.7×10^{-3}	3.0×10^{-3}	2.1×10^{-3}	4.5×10^{-4}	7.6×10^{-4}	1.9×10^{-4}
9	-	-	-	1.3×10^{-4}	-	5.2×10^{-5}	9.5×10^{-4}	1.1×10^{-3}	4.4×10^{-4}	1.3×10^{-4}	1.8×10^{-4}	5.2×10^{-5}
12	-	-	-	7.3×10^{-5}	-	2.4×10^{-5}	2.8×10^{-4}	3.6×10^{-4}	1.1×10^{-4}	7.3×10^{-5}	3.9×10^{-5}	2.4×10^{-5}
Lifetime Thyroid Dose (rem)												
1/2	a[2]	5.6×10^{-8}	7.1×10^{-4}	1.3×10^{-5}	6.6×10^{-3}	6.6×10^{-4}	a	1.4×10^{-7}	1.8×10^{-3}	3.2×10^{-5}	1.7×10^{-2}	1.7×10^{-3}
1	a	4.5×10^{-6}	2.2×10^{-3}	1.7×10^{-4}	2.7×10^{-3}	3.6×10^{-4}	a	1.1×10^{-5}	5.6×10^{-3}	4.3×10^{-4}	6.6×10^{-3}	8.9×10^{-4}
5	-	-	-	1.1×10^{-4}	-	4.0×10^{-5}	a	1.3×10^{-3}	1.3×10^{-3}	2.7×10^{-4}	5.0×10^{-4}	9.9×10^{-5}
9	-	-	-	3.6×10^{-5}	-	1.5×10^{-5}	3.8×10^{-8}	1.4×10^{-3}	5.6×10^{-4}	8.9×10^{-5}	2.0×10^{-4}	3.8×10^{-5}
12	-	-	-	2.9×10^{-5}	-	1.0×10^{-5}	9.3×10^{-7}	1.3×10^{-3}	3.6×10^{-4}	7.3×10^{-5}	1.3×10^{-4}	2.6×10^{-5}
Fallout Whole Body Dose (rem)												
1/2							a	2.3×10^{-10}	4.0×10^{-6}	3.6×10^{-7}	6.4×10^{-5}	3.2×10^{-5}
1							a	1.8×10^{-8}	1.3×10^{-5}	4.8×10^{-6}	2.6×10^{-5}	1.7×10^{-5}
5							a	2.1×10^{-6}	2.8×10^{-6}	3.0×10^{-6}	1.9×10^{-6}	1.9×10^{-6}
9							a	2.3×10^{-6}	1.3×10^{-6}	9.9×10^{-7}	7.9×10^{-7}	7.4×10^{-7}
12							1.1×10^{-9}	2.1×10^{-6}	8.0×10^{-7}	8.1×10^{-7}	4.9×10^{-7}	4.9×10^{-7}
Fallout (Washout) Whole Body Dose (rem) - Total Dose												
1/2						4.0×10^{-4}						
1						1.5×10^{-4}						
5						1.4×10^{-5}						
9						5.5×10^{-6}						
12						3.4×10^{-6}						

	Meteorology	Wind Velocity
VS-2	Very Stable	2 mph
MS-2	Moderately Stable	2 mph
N-2	Neutral	2 mph
N-10	Neutral	10 mph
U-2	Unstable	2 mph
U-10	Unstable	10 mph

(1) Calculated using meteorological diffusion methods discussed in Section XI-4.3.2 to XI-4.3.2f

(2) The symbol "a" means less than 1×10^{-10}

(3) First 2 hour dose is zero since cloud travel time is greater than 2 hours

TABLE XI-2

RADIOLOGICAL EFFECTS OF THE ROD DROP ACCIDENT[1]

(HW-SA-2809 Method)

Distance (Miles)	First 2 Hours Exposure						Total Accident Exposure					
	VS-2	MS-2	N-2	N-10	U-2	U-10	VS-2	MS-2	N-2	N-10	U-2	U-10
Passing Cloud Whole Body Dose (rem)												
1/2	2.9×10^{-2}	3.1×10^{-2}	3.1×10^{-2}	8.4×10^{-3}	3.1×10^{-2}	6.5×10^{-3}	2.9×10^{-2}	3.1×10^{-2}	3.1×10^{-2}	8.4×10^{-3}	3.1×10^{-2}	6.5×10^{-3}
1	1.3×10^{-2}	1.7×10^{-2}	1.6×10^{-2}	6.3×10^{-3}	1.6×10^{-2}	4.3×10^{-3}	1.3×10^{-2}	1.7×10^{-2}	1.6×10^{-2}	6.3×10^{-3}	1.6×10^{-2}	4.3×10^{-3}
5	-[3]	-	-	4.5×10^{-4}	-	1.9×10^{-4}	2.7×10^{-3}	3.0×10^{-3}	2.1×10^{-3}	4.5×10^{-4}	7.6×10^{-4}	1.9×10^{-4}
9	-	-	-	1.3×10^{-4}	-	5.2×10^{-5}	9.5×10^{-4}	1.1×10^{-3}	4.4×10^{-4}	1.3×10^{-4}	1.8×10^{-4}	5.2×10^{-5}
12	-	-	-	7.3×10^{-5}	-	2.4×10^{-5}	2.8×10^{-4}	3.6×10^{-4}	1.1×10^{-4}	7.3×10^{-5}	3.9×10^{-5}	2.4×10^{-5}
Lifetime Thyroid Dose (rem)												
1/2	a[2]	1.5×10^{-7}	3.3×10^{-3}	5.6×10^{-5}	5.6×10^{-3}	1.2×10^{-3}	a	3.8×10^{-7}	8.3×10^{-3}	1.4×10^{-4}	1.4×10^{-2}	2.9×10^{-3}
1	a	1.7×10^{-5}	4.3×10^{-3}	7.1×10^{-4}	2.3×10^{-3}	5.6×10^{-4}	a	4.3×10^{-5}	1.1×10^{-2}	1.8×10^{-3}	5.7×10^{-3}	1.4×10^{-3}
5	-	-	-	2.8×10^{-4}	-	4.0×10^{-5}	a	3.7×10^{-3}	2.3×10^{-3}	6.9×10^{-4}	3.4×10^{-3}	9.9×10^{-5}
9	-	-	-	9.7×10^{-5}	-	1.2×10^{-5}	1.0×10^{-7}	3.4×10^{-3}	8.3×10^{-4}	2.4×10^{-4}	1.1×10^{-4}	3.1×10^{-5}
12	-	-	-	5.6×10^{-5}	-	7.1×10^{-6}	2.2×10^{-6}	3.1×10^{-3}	4.7×10^{-4}	1.4×10^{-4}	6.5×10^{-5}	1.8×10^{-5}
Fallout Whole Body Dose (rem)												
1/2							a	6.3×10^{-10}	1.8×10^{-5}	1.6×10^{-6}	5.4×10^{-5}	5.7×10^{-5}
1							a	7.1×10^{-8}	2.4×10^{-5}	2.0×10^{-5}	2.2×10^{-5}	2.7×10^{-5}
5							a	6.1×10^{-6}	5.1×10^{-6}	7.7×10^{-6}	1.3×10^{-5}	1.9×10^{-6}
9							1.2×10^{-10}	5.7×10^{-6}	1.8×10^{-6}	2.7×10^{-6}	4.4×10^{-7}	5.9×10^{-7}
12							2.5×10^{-9}	5.0×10^{-6}	1.1×10^{-6}	1.7×10^{-6}	2.1×10^{-7}	3.5×10^{-7}
Fallout (Washout) Whole Body Dose (rem) - Total Dose												
1/2						8.0×10^{-4}						
1						2.9×10^{-4}						
5						2.5×10^{-5}						
9						9.2×10^{-6}						
12						4.8×10^{-6}						

	Meteorology	Wind Velocity
VS-2	Very Stable	2 mph
MS-2	Moderately Stable	2 mph
N-2	Neutral	2 mph
N-10	Neutral	10 mph
U-2	Unstable	2 mph
U-10	Unstable	10 mph

(1) Calculated using metorlogical diffusion methods in HW-SA-2809, see Section XI-4.3.2h
(2) The symbol "a" means less than 1×10^{-10}
(3) First 2 hour dose is zero since cloud travel time is greater than 2 hours

3.2 Fuel Loading Accident

(Conforming amendment of Unit 2 PDAR required where indicated by ‡)

3.2.1 Assumptions

In order to evaluate the consequences of potential accidents which could occur when the primary containment (drywell-suppression chamber) is not in effect, a number of accidents have been postulated. The fuel loading accident represents the maximum fission product release to the secondary containment. To achieve the postulated fuel loading accident, the following very improbable conditions must be imposed.

a. Two control rods, next to the fuel position to be loaded, have been withdrawn to give a near critical 2 × 4 fuel array with one of the center fuel assemblies missing. The refueling operators fail to see that these two rods are withdrawn and start to load a fuel assembly into the vacant position. This situation is extremely improbable because loading procedures require that all control rods be inserted when fuel is being lowered into the reactor. These procedures are reinforced by interlocks which prevent fuel handling over the reactor unless all control rods are inserted and which prevent control rod withdrawal when fuel is being handled over the reactor. See Section X-5. Also loading procedures require verification that the reactor is subcritical by withdrawing and reinserting control rods before and after each loading step.

b. The control room operator fails to notice the indications from his instruments that the control rods are out and that the reactor is near critical prior to laoding. This is highly unlikely because procedures require him to observe this instrumentation and to be in communication with the refueling operator during all fuel loading operations.

c. The fuel assembly reactivity worth is 2.3 percent Δk. Analysis indicates that this is the maximum potential reactivity worth for the assumed array.

d. The reactor fission power level is assumed to be 10^{-8} times rated with the fuel and moderator at 68°F.

e. The fuel assembly handle, the fuel grapple, or the grapple cable breaks and allows the fuel assembly to fall.

f. The assembly is assumed to be two feet above the core when it begins to fall. The fuel assembly falls directly into the vacant position in the core from a height of two feet over the core and meets no resistance to its fall. Because of the buoyancy of the fuel assembly in water, it falls with an acceleration of 0.9 gravity. The calculated maximum reactivity insertion rate of the falling fuel assembly is 10.0 percent Δk/second.

The insertion of a maximum worth fuel assembly at the maximum grapple lowering speed into the near critical 2 × 4 fuel array would not result in fuel damage before a neutron flux scram occurs. An accidental criticality from control rod withdrawal during refueling will be no more severe than the startup accident previously described, and therefore no fuel damage will occur.

Analyses indicate that if a fuel assembly were to be dropped into the core as described above, damage to the core grid plate would not be incurred and the functional capability of the plate would be maintained. Also any mechanical damage to the fuel assembly, in addition to the damage to the fuel rods as calculated in the refueling accident, would not significantly change the calculated consequences or lead to other failures of more serious consequences.

g. Because of the relatively slow transfer of energy to the moderator, no negative reactivity effect from moderator heating or void formation is included in the model. Control rod motion is assumed not to start until 0.2 second after the scram signal of 120 percent of rated power.

Because of the low energy density associated with the excursion, no serious core deformation will occur and it is difficult to conceive a mechanism to prevent control rod insertion following the excursion. The scram protection system is highly reliable and no instance of failure to scram on a full scram signal has been observed on an operating reactor. Mechanically the drives are designed to apply sufficient force to insert themselves even in such cases where shearing and tearing of channel material may result due to any misalignment of fuel assemblies. In any case, the reactor would be rendered subcritical upon the successful partial insertion of only one of the two withdrawn control rods in the assumed pattern, since the one stuck rod margin insures subcriticality with one rod withdrawn.

Even if it is hypothesized that no scram occurs, the power density in the small critical region of the core will equilibrate (due to the heating of the moderator and increased neutron leakage) far below rated power density. The cladding temperature will be only slightly above the water temperature, far below normal operating temperature. No fuel cladding perforations beyond that experienced during the initial power transient will occur, and no additional fission products will be released from the core.

3.2.2 Excursion Analysis

The mathematical model described in Section XI-4.4 is used to calculate the reactivity excursion and fuel heatup. The power transient is calculated to have a minimum period of 3.9 milliseconds. Total energy generated in the reactor core is 2610 MW-seconds (1.2 full power seconds) with a peak power in the excursion of 15×10^4 MW. Of the total energy release, about 27 MW-seconds result from metal-water reaction. Figure 88 shows the distribution of the 2610 MW-sec which is released during the refueling accident, in terms of the energy density histogram.

The excursion energy is distributed in the fuel such that about 41 pounds of UO_2 (in 224 fuel rods) have enthalpies greater than 170 cal/gm, which is estimated to be the threshold of eventual fuel clad damage. No fuel melting occurs. The maximum UO_2 enthalpy is 200 cal/gm. This is well below the 425 cal/gm estimated threshold for rupture of fuel rods from UO_2 vapor pressure. See Appendix C.

This thermal energy which is contained within the fuel rods will then decay into the coolant at a maximum rate given by Figure 89. The steam generation rate corresponding to this power is also shown on Figure 89. The steam generation rate shown is extremely conservative because no credit

is taken for film blanketing and the associated drastic reduction in the film side heat transfer coefficient and the subsequent reduction in the rate of energy transfer.

Both theoretical considerations and experimental evidence demonstrate that steam formed during the fuel loading accident will be rapidly condensed in the water and will not reach the surface of the pool. The fuel energy densities are not great enough to vaporize or melt the fuel, and thus heat transfer to the water would occur at rates associated with nucleate or film boiling heat transfer.

The total energy transfer rate to the water is 21% of full power at time zero and 0.1% of full power at 30 seconds. The eight fuel assemblies, included in the 2 × 4 array, contain 31.4% of the excursion energy. The rate of heat transfer from the fuel assembly to the water, assuming no burnout, is about 4 times the maximum design assembly rate at full power operation. This rate decays by heat transfer to 1.7 times the maximum design assembly rate at full power operation in 5 seconds and to 0.023 in 30 seconds. At full power operation, the reactor is operating at saturated conditions with an energy of vaporization of 650 Btu/lb, and the core is submerged below 13 to 14 feet of water. During refueling the water is at a temperature of approximately 100° to 120°F, so that it is about 100°F below the boiling point, 100 Btu/lb for a 100°F temperature rise, with an energy of vaporization of 970 Btu/lb. Additionally, the core is submerged below 50 feet of water. Some of the water in the eight hot fuel assemblies may boil but will be rapidly condensed by the water within the core region and immediately above the core, raising its average temperature less than 1°F. The halogens carried in the steam will be absorbed in the water as the steam is condensed.

The energy addition rate to water from the pressure suppression tests conducted at Moss Landing by P.G. & E. for Bodega Bay may be compared to the energy addition rate resulting from the fuel loading accident. The conditions are essentially the same. In the pressure suppression tests energy, in the form of steam-water, was added to water at around 100°F, at atmospheric pressure, heating up the water. The maximum energy addition rate to water during the tests was nearly 3×10^4 greater than the maximum energy addition rate to the water from the fuel loading accident. Additionally, in the pressure suppression tests the steam was condensed within 7 feet, whereas in the fuel loading accident 50 feet of water cover the core. The time for the steam bubble to be condensed in the Humboldt Bay pressure suppression system[1] was calculated to be 0.007 second. The steam from the fuel loading accident will be rapidly condensed and will not reach the pool surface.

The SPERT-1 reactor was subjected to transients[2] with shorter periods, 2.2 and 1.5 milliseconds, than result from the fuel loading accident, 3.9 milliseconds. Although SPERT-1 fuel temperatures did not reach the levels calculated for the fuel loading accident, the physical effects are expected to be similar because the calculated fuel energy densities for the fuel loading accident are well below levels that could cause rapid dispersal of the sintered oxide fuel and rapid heat transfer to the water. The water cover over the SPERT core was 5 to 6 feet compared to 50 feet over the core for this unit. In the SPERT tests no steam reached the surface of the pool and no fission products other than noble gases were detected in the atmosphere.

(1) "Humboldt Bay Preliminary Hazards Summary Report, Unit 3, Amendment 6, Addendum E, Appendix I," January 29, 1960.
(2) Grund, J.E., Editor, "Experimental Results of Potentially destructive Reactivity Additions to an Oxide Core," IDO-17028, December, 1964.

3.2.3 Dose Calculations

Fission Product Release from Fuel

Fission product release estimates for this analysis are based on the following assumptions:

1. The reactor fuel has an average irradiation time of 500 days at the reference design thermal output up to 24 hours prior to the fuel assembly drop.

2. As in the Control Rod Drop Accident (see Section XI-3.1) a maximum of 1.0 percent of the noble gas activity is in the fuel rod plenums and a maximum of 0.5 percent of the halogen activity is in the fuel plenums. Negligible solid or particulate activity would be released from the fuel. Any released would be absorbed in the reactor pool water.

The fission products generated during the excursion are negligible compared to those due to long-term operation. The following quantities of fission products would be released from the fuel to the water:

Fission Product	Amount Released (curies)
Noble Gases (Xe, Kr)	1.1×10^4
Halogens (Br, I)	6.3×10^3

Fission Product Inventory in the Reactor Building

All of the noble gas fission products are assumed to be released from the reactor water to the reactor building.

As the steam is condensed, the halogens are absorbed in the pool. They are assumed to be evolved from the pool into the air to establish an equilibrium partition factor. At the halogen concentration in the water (10^{-7} g mole/liter) from a fuel loading accident, the partition factors are 10^4 (Ref. 1), 2 $(10)^3$ (Ref. 2), and 10^4 (Ref. 3). In the analysis of this accident the partition factor was conservatively assumed to be 10^2. Even if steam condensation did not occur, the steam bubbles would be expected to be effectively scrubbed of halogens the same as they are during normal operation of the reactor. If the partition factor were 10^0, the dose from halogens would increase only by a factor of 2.

Halogen fission products would also fall out and plate out in the reactor building, but additional halogens would be evolved from the reactor water to maintain equilibrium concentration in the reactor building air if a true equilibrium condition were established as is assumed in this analysis. There would be little fallout or plateout of the noble gas fission products.

‡ Based on the above assumptions and a 100 percent of building volume per day discharge rate through
‡ the standby gas treatment system, the calculated building fission product inventory with time is shown in
‡ Table XI-3. Note that the reactor building volume represents the combined volume for Units 2 and 3.

1. Miller, et. al., "International Symposium on Fission Product Release and Transport Under Accident Conditions, "Paper 12, April, 1965, Oak Ridge, Tennessee
2. Allen, T.L., and Keefer, R.M., "The Formation of Hypoiodus Acid and Hydrated Iodine Cation by the Hydrolysis of Iodine", JACS 77, No. 11, June, 1955
3. Watson, Bancroft and Hoelke, AECL-1130, "Iodine Containment by Dousing in NPD-11, 1960

‡ TABLE XI-3

REACTOR BUILDING AIRBORNE FISSION PRODUCT INVENTORY

(curies)

Time	Noble Gases	Halogens
1 minute	1.1×10^4	5.3×10^3
30 minutes	1.1×10^4	5.3×10^3
1 hour	1.1×10^4	5.2×10^3
3 hours	1.0×10^4	5.1×10^3
10 hours	9.0×10^3	4.7×10^3
1 day	7.5×10^3	4.2×10^3
3 days	5.1×10^3	2.3×10^3
10 days	2.3×10^3	8.7×10^2
30 days	3.0×10^2	1.0×10^2

Stack Release Rate Calculations

The standby gas treatment system is actuated automatically on high area radiation in the reactor building in order to control the release of fission products to the atmosphere. Monitors are located near the fuel pool and the standby gas treatment system will be initiated prior to fission product release by the regular ventilation system. The standby gas treatment system can pull a vacuum of 0.25 in. of water in the reactor building when it is isolated and discharge approximately 100 percent of the building ‡ volume per day through the filters to the 310 foot stack. The amount of fission products that are released from the stack is calculated assuming that the efficiency of the filters in only 99 percent. The filter units, which consist of demisters, high efficiency filters and charcoal filters, will have an actual filter efficiency on the order of 99.9 percent. See Section V-4. The activity release rate from the stack is as follows:

‡ TABLE XI-4

FISSION PRODUCT RELEASE RATE FROM STACK

(curies/sec.)

Time	Noble Gases	Halogens
1 minute	1.2×10^{-1}	6.1×10^{-4}
30 minutes	1.2×10^{-1}	6.0×10^{-4}
1 hour	1.2×10^{-1}	5.9×10^{-4}
3 hours	1.1×10^{-1}	5.4×10^{-4}
10 hours	7.1×10^{-2}	4.0×10^{-4}
1 day	3.3×10^{-2}	2.2×10^{-4}
3 days	6.0×10^{-3}	2.4×10^{-3}
10 days	1.7×10^{-6}	3.0×10^{-8}
30 days	--	--

Doses

The potential doses to off-site persons are calculated as shown in Section XI-4.3. The calculated doses are given in the following tables. Even the largest of these exposures is below established limits.

‡TABLE XI-5

RADIOLOGICAL EFFECTS OF THE FUEL LOADING ACCIDENT[1]

Distance (miles)	Total Accident Exposure					
	VS-2	MS-2	N-2	N-10	U-2	U-10
External Passing Cloud Dose (rem)						
1/2	2.9×10^{-2}	3.2×10^{-2}	3.2×10^{-2}	8.6×10^{-3}	3.2×10^{-2}	6.7×10^{-3}
1	1.4×10^{-2}	1.7×10^{-2}	1.6×10^{-2}	6.4×10^{-3}	1.6×10^{-2}	4.4×10^{-3}
5	2.8×10^{-3}	3.1×10^{-3}	2.2×10^{-3}	4.6×10^{-4}	7.8×10^{-4}	2.0×10^{-4}
9	9.8×10^{-4}	1.2×10^{-3}	4.5×10^{-4}	1.4×10^{-4}	1.8×10^{-4}	5.3×10^{-5}
12	2.9×10^{-4}	3.7×10^{-4}	1.1×10^{-4}	7.5×10^{-5}	4.0×10^{-5}	2.4×10^{-5}
Lifetime Thyroid Dose (rem)						
1/2	a[2]	2.4×10^{-6}	3.1×10^{-2}	5.5×10^{-4}	2.8×10^{-1}	2.8×10^{-2}
1	a	1.9×10^{-4}	9.6×10^{-2}	7.4×10^{-3}	1.1×10^{-1}	1.5×10^{-2}
5	2.4×10^{-10}	2.2×10^{-2}	2.2×10^{-2}	4.6×10^{-3}	8.5×10^{-3}	1.7×10^{-3}
9	6.5×10^{-7}	2.4×10^{-2}	9.6×10^{-3}	1.5×10^{-3}	3.5×10^{-3}	6.5×10^{-4}
12	1.6×10^{-5}	2.2×10^{-2}	6.1×10^{-3}	1.2×10^{-3}	2.2×10^{-3}	4.4×10^{-4}
Fallout Dose (rem)						
1/2	a	4.0×10^{-9}	6.8×10^{-5}	6.1×10^{-6}	1.1×10^{-3}	5.5×10^{-4}
1	a	3.2×10^{-7}	2.1×10^{-4}	8.3×10^{-5}	4.4×10^{-4}	3.0×10^{-4}
5	a	3.6×10^{-5}	4.9×10^{-5}	5.1×10^{-5}	3.3×10^{-5}	3.3×10^{-5}
9	7.6×10^{-10}	4.0×10^{-5}	2.1×10^{-5}	1.7×10^{-5}	1.4×10^{-5}	1.3×10^{-5}
12	1.9×10^{-8}	4.0×10^{-5}	1.4×10^{-5}	1.4×10^{-5}	8.4×10^{-6}	8.5×10^{-6}

Direct Radiation (roentgen/h)

Peak 2 hour dose rate at 1/2 mile is 7×10^{-6}

Fallout Dose - Washout (rem) - Total Dose

1/2	1.1×10^{-3}
1	4.1×10^{-4}
5	3.9×10^{-5}
9	1.5×10^{-5}
12	9.5×10^{-6}

	Meteorology	Wind Velocity
VS-2	Very Stable	2 mph
MS-2	Moderately Stable	2 mph
N-2	Neutral	2 mph
N-10	Neutral	10 mph
U-2	Unstable	2 mph
U-10	Unstable	10 mph

(1) Calculated using meteorological diffusion methods described in Sections XI-4.3.2 to XI-4.3.2f.
(2) The symbol "a" means less than 1×10^{-10}.

‡ TABLE XI-6

RADIOLOGICAL EFFECTS OF THE FUEL LOADING ACCIDENT[1]

(HW-SA-2809 Method)

Distance (miles)	Total Accident Exposure					
	VS-2	MS-2	N-2	N-10	U-2	U-10
External Passing Cloud Dose (rem)						
1/2	3.3×10^{-2}	3.5×10^{-2}	3.5×10^{-2}	9.5×10^{-3}	3.5×10^{-2}	7.3×10^{-3}
1	1.5×10^{-2}	1.9×10^{-2}	1.8×10^{-2}	7.1×10^{-3}	1.8×10^{-2}	4.8×10^{-3}
5	3.0×10^{-3}	3.4×10^{-3}	2.4×10^{-3}	5.0×10^{-4}	8.6×10^{-4}	2.1×10^{-4}
9	1.1×10^{-3}	1.3×10^{-3}	4.9×10^{-4}	1.5×10^{-4}	2.1×10^{-4}	5.8×10^{-5}
12	3.2×10^{-4}	4.0×10^{-4}	1.2×10^{-4}	8.2×10^{-5}	4.4×10^{-5}	2.7×10^{-5}
Lifetime Thyroid Dose (rem)						
1/2	a[2]	1.4×10^{-5}	3.1×10^{-1}	5.2×10^{-3}	5.1×10^{-1}	1.1×10^{-1}
1	a	1.6×10^{-3}	4.0×10^{-1}	6.6×10^{-2}	2.1×10^{-1}	5.2×10^{-2}
5	1.5×10^{-9}	1.4×10^{-1}	8.4×10^{-2}	2.5×10^{-2}	1.3×10^{-1}	3.7×10^{-3}
9	3.8×10^{-6}	1.3×10^{-1}	3.1×10^{-2}	8.9×10^{-3}	4.2×10^{-3}	1.1×10^{-3}
12	8.0×10^{-5}	1.1×10^{-1}	1.7×10^{-2}	5.2×10^{-3}	2.4×10^{-3}	6.6×10^{-4}
Fallout Dose (rem)						
1/2	a	2.3×10^{-8}	6.8×10^{-4}	5.8×10^{-5}	2.0×10^{-3}	2.1×10^{-3}
1	a	2.6×10^{-6}	8.9×10^{-4}	7.3×10^{-4}	8.2×10^{-4}	1.0×10^{-3}
5	a	2.2×10^{-4}	1.9×10^{-4}	2.8×10^{-4}	4.9×10^{-4}	7.1×10^{-5}
9	4.4×10^{-9}	2.1×10^{-4}	6.8×10^{-5}	9.9×10^{-5}	1.6×10^{-5}	2.2×10^{-5}
12	9.3×10^{-8}	1.9×10^{-4}	3.9×10^{-5}	5.8×10^{-5}	9.3×10^{-6}	1.3×10^{-5}

Direct Radiation (roentgen/h)

Peak 2 hour dose rate at 1/2 mile is 7×10^{-6}

Fallout Dose - Washout (rem) - Total Dose

1/2	2.3×10^{-3}
1	8.3×10^{-4}
5	7.1×10^{-5}
9	2.6×10^{-5}
12	1.4×10^{-5}

	Meteorology	Wind Velocity
VS-2	Very Stable	2 mph
MS-2	Moderately Stable	2 mph
N-2	Neutral	2 mph
N-10	Neutral	10 mph
U-2	Unstable	2 mph
U-10	Unstable	10 mph

(1) Calculated using meteorological diffusion methods in HW-SA-2809, see Section XI-4.3.2h.

(2) The symbol "a" means less than 1×10^{-10}

3.3 Steam Line Rupture Outside the Reactor Building

(Conforming Amendment to Unit 2 PDAR required where indicated by ‡)

The severance of a main steam line outside the drywell is of interest because it represents a potential escape route from the core to the environs without passage through the primary containment or the reactor building.

3.3.1 Assumptions

One of the four main steam lines which are arranged in cross-tied pairs, is assumed to be completely severed in the pipe tunnel outside the drywell. The steam flow in each of the four lines
‡ increases to the maximum allowed by the flow limiter, about 150% rated steam flow. Either the increased pressure drop across the flow limiter, the pressure downstream, a pipe tunnel over-pressure switch, or some other suitable means of detecting the severance immediately initiates isolation valve closure, which in turn scrams the reactor. For reliability, multiple sensors are provided in the reactor protection system. The isolation valves are designed to close against reactor operating pressure. The turbine inlet pressure regulator senses the loss in pressure and closes the turbine inlet valves preventing backflow from the turbine. The turbine stop valves will be automatically closed after about 2 seconds. Therefore, the steam flow in two of the lines will be stopped since they will be effectively isolated from the turbine steam chest. Hence, steam will be flowing only through the broken line and its crosstie at
‡ 150% of their normal rate. The total steam leaving the reactor will then be about 75% rated flow during the blowdown until the closing isolation valves throttle the steam limiting its flow and finally stopping it about 11 seconds or less after the break.

In addition to the scram from isolation valve closure, voids generated by depressurization caused by the excess flow leaving the vessel will contribute sufficient negative reactivity to reduce reactor power immediately. Finally as additional backup, low-low water level, although occurring later during the blowdown when the mixture density in the vessel is sufficiently low, would also scram and isolate the reactor.

It was also assumed that there would be no contribution from steam being generated in the reactor. This maximizes the degree of swell in the reactor and amount of water released.

3.3.2 Reactor Coolant Lost

The steam flow through the flow limiters during the steam blowdown period was computed to be about 1720 lb_m/sec total from the two 0.43 ft^2 nozzles resulting from the double-ended break. The flowdown flow rates were computed from an ideal nozzle model.[1] The flow model predicts the behavior to be 1720 lb/sec. total using an ideal nozzle model.[1] The flow model has been substantiated by tests being conducted on a scale model over a variety of pressure, temperature, and moisture conditions.

1. Moody, F. J., "Maximum Flow Rate of a Single Component, Two Phase Mixture," Journal of Heat Transfer, Trans. ASME, Series C Vol. 87, P. 134.

The excess of steam leaving the reactor over that being generated results in rapid depressurization in the order of 35 psi/sec. This causes flashing of the moderator throughout the reactor. Bubbles generated within the system cause the internal level to rise at a rate determined by the difference between the rate at which they are formed and the rate at which they break the surface. An analytical model predicts the rate of level rise. This model has shown reasonable agreement, in a portion of the range of interest, with level rise data obtained in a large vessel undergoing depressurization. The steam water mixture level would rise at a rate less than four feet per second in the reactor vessel. Essentially no water would enter the steam line until the mixture spills over the dryers, about 12 feet above normal water level. Steam blowdown should therefore proceed for three seconds. The steam water mixture spilling into the steam line reaches the flow limiter and blowdown rate is then set by the two phase mixture at the limiter.

The flow, 7000 lbs/sec. during this phase, was calculated using the model and assuming that the mass rate was that of critical saturated liquid blowdown. The isolation valves were assumed to close in 10 seconds following a closure signal delay of 1 second. The valves are specified to close in 3 to 10 seconds. No credit was taken for any reduction in flow as the valves close. Thus the total mass of steam and water leaving the system was determined by the flow limiters. Furthermore, no credit was taken for flow inputs to the vessel. The estimated loss of mass from the reactor was 61,000 lbs (approximately 5000 pounds of steam and 56,000 pounds of water), well below the mass of liquid which must be lost before the core is uncovered.

Steam-water mixture leaving the break passes down the steam line tunnel and exhausts into the turbine building. The pressure in the building is relieved through relief panels in the building walls or is vented through the building ventilation ducts near the top of the building.

3.3.3 Core Cooling

Feedwater will continue entering the vessel during the 11 seconds before the isolation valves are closed and continue after the valves are closed, reflooding the vessel. After the isolation valves are closed, the reactor could be cooled indefinitely by operation of the isolation condensers.

3.3.4 Radioactivity Released

The predominate activity in the discharged coolant would be N-16, which would be substantially reduced by decay due to its approximately 7 second half life. If the reactor contained fuel with cladding leaks, the water released through the break would contain some fission products.

During 1964, the Dresden Unit 1 reactor was operated with a significant number of cladding leaks. Analysis of reactor water samples indicated the following yearly average fission product content:

I-131	0.025 μc/cc
I-133	0.1 μc/cc
Other halogens	0.25 μc/cc
Other fission products	0.25 μc/cc

With the reactor cleanup system flow for the proposed unit, it is estimated that the maximum coolant activity will be approximately 2.1 μc/cc.

I-131	0.03 μc/cc
I-133	0.2 μc/cc
Other halogens	1.7 μc/cc
Other fission products	0.14 μc/cc
	~ 2.1

Measurements of halogen concentrations in the Dresden Unit 1 reactor water and condensate show that the steam to water halogen concentration ratio is in the range of 3×10^{-5} to 10^{-5} (Section XI-4.5). Since the water carryover is estimated to be 56,000 lbs compared to 5000 lbs. steam, effectively the ‡ only halogens carried out through the break would be those absorbed in the water. Thus, 72 curies of halogens, including 1.0 curies of I-131 and 6.6 curies of I-133 are carried out through the break.

Based on operating experience, the above fission product concentrations in the reactor coolant would occur when the stack offgas emission was at about 70,000 μc/sec. measured after 30 minutes decay in the offgas system. The noble gas activity discharged from the break, assuming an 11 second ‡ isolation valve closure time, would be 4.4 curies (calculated for 2 minutes decay time).

3.3.5 Steam Cloud Movement

The steam would emerge superheated from the break, at atmospheric pressure. At atmospheric pressure the total lost coolant would separate to 26,000 lbs steam and 35,000 pounds water. Some of the hot steam would be condensed on the cooler surfaces, but most of it would escape through the ventilation ducts or relief panels near the top of the turbine building. Out of the turbine building, the steam would initially rise at a rapid rate due to buoyancy. Even as the steam cloud mixed with the surrounding air, it would remain less dense than the air. Measurements of the altitudes to which smoke will rise when released at ground level have been made at Brookhaven National Laboratory.[1] The equation developed in the experiments predicts that the steam would rise to a centerline height of 4700 feet with a 1 mile per hour wind, to 470 feet with 10 mile per hour wind and to 95 feet with a 50 mile per hour wind. The dose calculations are based on an assumed wind speed of 50 miles per hour at the time of the steam relief from the turbine building.

The reference of Section XI-3.2 on halogen partitions indicate that 99 to 99.99% of the halogens would remain absorbed in the water which does not evaporate. Nevertheless, for this analysis, it was assumed that all of the halogens contained in the 56,000 lbs of low quality steam-water mixture are released to the environs with the water which is vaporized on reduction to atmospheric pressure as it issues from the break.

3.3.6 Radiological Effects

The resulting doses to off-site persons from the halogens and noble gases released are calculated by the methods shown in Section XI-4.0. The maximum dose at any off-site locations is well below those listed in 10 CFR 100, 25 rem whole body and 300 rem thyroid.

‡ TABLE XI-7

RADIOLOGICAL EFFECTS OF THE STEAM LINE BREAK ACCIDENT

Distance (Miles)	Passing Cloud Dose (rem)	Thyroid Dose (rem)
1	6.8×10^{-6}	3.2×10^{-2}
2	2.1×10^{-6}	9.8×10^{-3}
5	4.6×10^{-7}	2.1×10^{-3}
10	1.7×10^{-7}	7.9×10^{-4}

3.3.7 Margin in the Design

The doses to off-site persons are well below those listed in 10 CFR 100. These calculations are based on generally conservative assumptions. It is expected that the maximum doses received by any person from a steam line break accident would be far below the calculated doses. Nevertheless, in order to demonstrate some of the margin included in the design of the reactor and its systems, the consequences of a steam line break coincident with the maximum coolant activity, and the consequences of a number of cladding ruptures occurring during the steam line break have been evaluated.

The activity released during the coolant blowdown is based upon the maximum expected coolant activity during operation, during which the offgas activity is well below the stack limit. If the offgas activity were at the stack limit, the reactor coolant activity could be as much as 10 times higher than that assumed in the analysis. All other assumptions remaining the same, increasing the coolant activity by a factor of 10 increases the calculated doses by the same amount. The doses are still well below those listed in 10 CFR 100.

Since the core remains covered and is adequately cooled, no fuel cladding ruptures occur as a result of the steam line break accident. Nevertheless, the consequences of the rupturing of 36 fuel rods (0.1 percent of the total rods) at the time of the break has been calculated. With the fractions of total activity in the fuel rod plenums as listed in the "Control Rod Drop Accident" (see Section XI-3.1) 3000 curies of halogens (calculated at 2 minutes) and 6900 curies of noble gases (calculated at 2 minutes) would be released to the coolant. The released halogens would be absorbed by the water. Since the steam to water concentration ratio at operating conditions in 3×10^{-5} to 10^{-5}, the major loss of
‡ halogens through the break results from the water carryover. Therefore, about 300 curies of additional halogens would be lost through the break due to the rod perforations. All of the noble gases are assumed to be lost through the break. The resulting whole body dose due to the increased fission
‡ product loss are calculated to be about a factor of 100 increase over those in Section XI-3.3.6. The fac-
‡ tor increase in thyroid dose would be about 5. These doses are still well below those listed in 10 CFR 100.

1. Singer, I. A., J. A. Frizzola and M. E. Smith, "The Prediction of the Rise of a Hot Cloud From Field Experiments," Journal of the Air Pollution Control Association, November 1964.

3.4 Loss of Coolant Inside the Drywell

(Conforming Amendment of Unit 2 PDAR required where indicated by ‡)

3.4.1 Introduction

The rupture of a pipe or valve on a high pressure line could result in a loss of coolant from the reactor. The full range of coolant loss accidents has been analyzed, from a small break where the makeup flow is greater than the coolant loss rate, to the largest break, a highly improbable circumferential recirculation line rupture. The analysis has shown that the circumferential recirculation line break results in the maximum fuel and coolant temperature. Specific protection have been supplied to cool the core and to handle the coolant lost from a system rupture. Two independent systems to cool the core following a loss of coolant have been supplied. Together these two sprays can flood the core to about 2/3 of its height in about 5 minutes thereby assuring long-term cooling. For this analysis one core spray system and one containment spray system are assumed to fail to operate. The coolant lost out the rupture is condensed in the pressure suppression pool, reducing the primary containment pressure and consequent containment leakage following a coolant loss. Energy is removed from the pressure suppression pool by the containment cooling system, further reducing the containment pressure and consequent leakage.

3.4.2 Coolant Loss and Core Cooling

An analysis of the coolant blowdown following the circumferential recirculation pipe rupture has been made and is described as follows: The reactor is operating at the design thermal output and the recirculation loop is assumed to be instantly severed in a circumferential break. In the reactor vessel outlet leg of the recirculation loop, critical flow occurs at the break. Critical flow also occurs at the 10 jet pump injection nozzles, the minimum area in the path to the break. The equalizer line valve is normally closed during two pump operation. However, for the purpose of this analysis it was assumed full open with critical flow occurring in the pipe with zero losses. Thus the total break area at which critical flow is occurring was assumed to be the sum of the suction nozzle area, the 10 jet pump injection nozzle area, and the equalizing line area.

Immediately following the break, the large increase in core void fraction due to depressurization sharply decreases reactor power. Scram will also be initiated in less than a second from high drywell pressure. Relative to the total blowdown time, the pressure regulator quickly closes the turbine admission valves in an effort to maintain pressure. Hence, steam flow will be a contributor to depressurization only during the first few seconds.

In about four seconds, the subcooled liquid mass below the core will be flashing vigorously because of depressurization. This will tend to force a steam-water mixture up through the core, as well as backward through the jet pump diffuser pipes, because the hydraulic resistance of the diffuser piping is significant relative to the series resistance through the core, grid plates, and separators.

The calculations indicate that it will take nearly 24 seconds to depressurize the vessel. During a fraction of this time, the bulk of the core will be cooled by a boiling two phase mixture. The recirculation pump in the other leg will continue to inject fluid into the vessel for approximately 4 seconds or at least until the subcooled fluid begins to flash. This will contribute to core flow momentarily. Feedwater flow would increase to the maximum in an effort to maintain level, but no credit was taken for this in evaluating either the coolant inventory during the blowdown nor the blowdown time. The mass of water-steam mixture in the vessel during the blowdown is shown in Figure 57. Some water will remain behind in the vessel after blowdown but it was assumed that entire inventory was lost during blowdown. Low water level in the reactor vessel would initiate actuation of the independent core spray systems. These systems begin injecting water into the core when the reactor pressure falls below 150 psig. The core spray system pumps a water spray onto the top of the core. The water flows down the fuel rods, cooling the fuel as the water evaporates.

A core spray system, in about 10 minutes, re-floods the core up to the top of the jet pump diffusers. Flooding of the core to the top of the jet pumps is possible because the core shroud is sealed circumferentially around the vessel wall, and the vessel internals are designed to maintain their integrity during the blowdown. The tops of the jet pump diffusers are above the mid-plane of the core. When the core is half flooded with water, the voids formed in the flooded region from decay heat cause a steam-water mixture to flow up past the unflooded section of fuel thereby cooling it. This has been substantiated by tests on full scale heated fuel prototypes in which the maximum temperature in the unflooded portion was below 1300°F over a wide range of variables.

The fuel thermal transient during after the blowdown is analyzed using a digital code which treats the core as five radial zones with five axial nodes per zone. Each radial zone is further divided into four zones. This allows accurate modeling of the power distribution by including the axial, radial and local rod peaking factors. The fuel volume within the cladding is also nodalized radially. The code considers decay power, stored energy in the core, the energy contributions of any chemical reaction which may occur, and the thermal radiation between fuel rods and fuel channels. It also accounts for any heat removed during the blowdown as a function of time varying the heat transfer coefficient. It calculates the cladding and channel temperatures, the degree of metal-water reaction, hydrogen and energy release, and other parameters of interest, on a nodal basis as a function of time. The fuel channels are included and treated on a nodal basis.

The effective time interval over which the core is cooled during blowdown cannot be established precisely by calculation. Test data indicates however that a high boiling heat transfer coefficient exists during about 5 seconds of the blowdown and then diminishes to approximately zero Btu/°F/ft^2/hr at the end of 15 seconds. This time variant heat transfer coefficient was used in the core heat-up calculation described above. Figure 58a shows the fuel cladding temperature at various times following the pipe rupture, assuming one core spray is operating and using the effective heat transfer coefficients determined by tests. The degree of metal-water reaction which will occur is also shown as a percentage of the total zirconium in the core. Both core sprays will come on within one minute of the rupture. Only one is required to cool the core. Approximately 45% of the fuel rods experience cladding perforations, as shown in Figure 58a. The amount of hydrogen produced from any metal-water reaction would be well below the flammability limit.

3.4.3 Containment Pressure

The drywell and suppression pool pressure transients from the steam blowdown have also been calculated. A calculational code has been developed from the results of the pressure suppression tests conducted by Pacific Gas and Electric at Moss Landing. (See Section XI-4). The code predicts the ‡ results of these tests accurately. The drywell pressure will rise to about 39 psig in approximately three seconds. This peak was based on the conservative assumption that the valve in the equalizing line connecting the pump discharges was open. Thus, water from the second recirculation loop will flow through the equalizing line and out the break. Because of the pipe length, pump resistance, flowmeter restrictions, etc., flow through this line is expected to choke in the pipe and will be less than for an ideal nozzle having the area of the equalizing line. However, for the purpose of this preliminary analysis flow was based on an equivalent ideal nozzle having the pipe area. Thus, the total flow and containment transient pressures are conservatively based on an ideal nozzle having an area equal to the sum of 10 jet pump nozzles, the suction line area, and the equalizing line area. This situation will not exist at full power but only when the reactor is operating at a partial load. At full power the valve will be shut and the peak drywell pressure will be under 31 psig. The design pressure for the drywell is 62 psig, well above the transient pressures expected.

In less than 30 seconds after the break, the pressure in the pressure suppression chamber and drywell will have equalized to about 21 psig. The containment cooling systems will be designed so that either of the full capacity independent systems will maintain the pressure of the suppression chamber below the 62 psig design pressure. This analysis assumed that only one of the two independent containment spray systems operates. The calculated containment pressure response is given in Figure 58b, curve b.

3.4.4 Fission Product Release to Primary Containment

As previously stated in Section XI-3.4.2, the calculations show that about 45% of the fuel rods in the core might experience cladding perforation, but no fuel would melt. A maximum of 1% of the noble gas activity and 0.5% of the halogen activity contained in a fuel rod is in the plenums and available for release if the cladding is perforated (Section XI-3.1.4). Negligible solid or particulate activity would be released from the perforated rods. Thus, the amount of the total reactor fission product inventory released from the fuel would be about 0.45 percent of the noble gases and about 0.225 percent of the halogens. The release occurs as the cladding is perforated, see Figure 58a.

The calculations show that the core spray prevents any fuel melting during the accident. Nevertheless, the assumptions which would be applied to melted fuel are listed here in order to have all assumptions in one place.

The fission products which would be assumed to be released from melted fuel were assumed to released as follows:

Fission Product Group	Percent Release
Noble Gases	100
Halogens	50
Volatile Solids	50
Other Solids	1

These releases are assumed to occur when the fuel reaches the 3000°F UO_2 recrystallization temperature. The total fission product activity is based upon an assumed uninterrupted 1000 days full power operation.

The fallout and plateout of fission products within the reactor vessel and piping reduce the amount of fission products available for transport to the drywell. Of the halogens released from the fuel, ten percent are conservatively estimated to be of the organic form (principally methyl iodide).

Since organic halogens are much less soluble in water and are more difficult to filter, a conservatively large fraction of halogens were assumed to be organic. Fuel melting experiments[1,2,3] have resulted in 0.1% to 3% of the release halogens being of the organic form. For the loss-of-coolant analysis, 10% of the halogens released from the fuel are assumed to be organic form. This assumption is thus conservative by a factor of 3 to 100.

All organic halogens are assumed to escape fallout and plateout. Of the remaining 90 percent (which are non-organic), 50 percent plateout on metal surfaces. The fallout and plateout in the reactor vessel and piping is:

Fission Product Group	Fallout and Plateout Percent
Noble Gases	0
Halogens, Organic	0
Nonorganic	50
Volatile Solids	70
Other Solids	70

References

1. Collins, D.A., et. al., "International Symposium on Fission Product Release and Transport Under Accident Conditions, "Paper 59, 1965, Oak Ridge, Tennessee.

   Stainless steel and zirconium clad UO_2 heated up to above 2000°C in steam or CO_2 atmosphere 0.1 to 1.7% of released halogen is organic; 85% of organic halogens decompose at 800°C in steam. 2000°C is above the melting point of zirconium; at the melting temperature the fuel would slump and leave the core region. Therefore 2000°C is approximately the maximum cladding and fuel surface temperature of the core, and the range of release temperatures of the test corresponds to the range which would accompany a 100% core melt. This test is very appropriate to a 100% core melt.

2. Parker, et. al., SIFTOR Draft, Volume II, Chapter 18, "Fission Product Release". Stainless steel clad UO_2 melted; 80% of released halogens were I_2, 20% absorbed on particles, no detectable organic halogens.

3. Collins, R.D., and Hillary, "International Symposium on Fission Product Release and Transport Under Accident Conditions," Paper 44, April, 1965, Oak Ridge, Tennessee.

   Zirconium clad UO_2 (unirradiated, tracer irradiated and irradiated to 100 MWd/ton) heated to between the zirconium melting temperature and the UO_2 melting temperature in steam air atmosphere. The organic halogens were a very small fraction of the halogens released; except at the highest heating temperatures, where the organic fraction reached 2 to 3%. These tests correspond to the postulated 100% melt case where the fuel heats up in a steam-air atmosphere until the zirconium melts, allowing the fuel to fall out of the core region. The methyl iodides were filtered with coconut charcoal with an efficiency from 99 to 99.9% at 100°C.

The pressure suppression containment contains a tremendous volume of water for absorption of halogens. The air-to-water volume ratio is about 2.6. All the organic halogens are assumed to remain airborne, although, at an air-to-water ratio of 2.6 about half would be expected to be absorbed in water.[1] At the halogen concentration that would result from a 100% core melt, an inorganic halogen partition factor of 3 $(10)^2$ has been measured.[1] In ORR in-pile UO_2 melting experiments, the condensation of the steam in the gas stream removed essentially all halogens from the gas stream.[2] The inorganic halogen partition factor according to Allen[3] would be 10^2 at 100% melt conditions. Watson[4] reports

---

1. Diffey, et. al., "International Symposium on Fission Product Release and Transport under Accident Conditions," Paper 41, April, 1965, Oak Ridge, Tennessee.

   Tests included bubbling air and air-steam containing elemental iodine, methyl iodide, hydrogen iodide and particulates through water. Tests included both a 3 mm diameter lute (vent type with lower end submerged) immersed 6 cm below the water surface and a 50 mm diameter lute immersed 50 cm. The air tests correspond to the beginning of the coolout blowdown, in which air containing essentially no halogens is blown through the vent pipes. The steam-air tests correspond to the major part of the coolout blowdown, when some halogens would be contained in the air-steam mixture. The later phases of the coolout blowdown, consisting almost entirely of steam and containing a higher halogen content, would benefit from virtually complete halogen scrubbing, and therefore were not included in these experiments. The tested lutes are smaller diameter than the suppression pool vent pipes, but the maximum tested vapor velocity of 110 ft/sec is greater than the actual blowdown vapor velocity when halogens are being carried in the steam. Additional work is being conducted to determine if scaling factors are necessary. The pool temperature was 50°C in the experiments, corresponding to the pressure suppression pool temperature.

   The initial absorption of halogens in a pressure suppression pool would be almost complete, followed by re-evolution until an equilibrium partition factor (water/air concentration) is achieved. Therefore, experiments were also conducted to determine the equilibrium partition factor. For the halogen water concentration corresponding to the 100% melt loss of coolant, 3 $(10)^{-6}$ g mole/1, the measured halogen partition factor was 3 $(10)^2$ for inorganic halogens and about 3 for organic halogens.

2. Miller, et. al., "International Symposium on Fission Product Release and Transport Under Accident Conditions," Paper 12, April 1965, Oak Ridge, Tennessee.

   Stainless steel clad UO_2 was melted in-pile in the ORR in dry, moist and steamy air. The melting temperatures correspond to those accompanying the postulated 100% melt loss of coolant accident. The halogens were significantly removed from the gas stream by condensation of the moisture.

3. Allen, T. L., and Keefer, R. M., "The Formation of Hypoiodus Acid and Hydrated Iodine Cation by the Hydrolysis of Iodine" JACS 77, No. 11, June 1955.

   The iodine partition factor was measured for pH = 5.4 to pH = 7. For the halogen concentration corresponding to the 100% melt, within the measured pH range, the halogen partition factor is 10^2.

4. Watson, Bancroft and Hoelke, AECL-1130, "Iodine Containment by Dousing in NPD-II," 1960

   Dousing experiments and equilibrium iodine concentration experiments were conducted in 26 gallon and 45 gallon drums and a 120 liter flask. In the dousing experiments, water was sprayed into the drums containing airborne inorganic halogens and allowed to condense. The total volumes of halogens and water do not correspond to the pressure suppression system, but the important parameters of halogen concentration in water, water chemistry, and temperature correspond to the conditions accompanying a 100% melt loss of coolout. The experiments included halogen concentrations in water from 10^{-12} to 10^{-5} gm-mole/1; the 100% melt results in 3 $(10)^{-6}$ gm-mole/1. Variation of water and quality, pH and water additives did not alter the result of the experiments. The experiments were conducted with room temperature water. Over this range of experimental conditions, including those appropriate to the postulated accident, the measured decontamination factor was greater than 10^4.

the partition factor to be greater than 10^4. These experiments, including both steam condensation in vapor suppression systems and in air correspond to the conditions accompanying a loss of coolant accident. The initial blowdown through the suppression pool is mostly air, the trailing phases of blowdown is essentially all steam. Most fission product release would accompany the final steam release and would be scrubbed efficiently by the steam condensation. Airborne inorganic halogen and solid fission products in the drywell would be rapidly removed by the containment spray and steam condensation and mixed with the water in the suppression chamber. For the accident analysis, a partition factor of 10^2 for inorganic halogens is used. Inorganic halogens are assumed to be re-evolved from the water as leakage from the containment reduces the inventory of airborne halogens. Combining the assumption of a high fraction of organic halogens with no absorption in water and the conservative water to air partition factor for inorganic halogens results in a very conservative high fraction of halogens remaining airborne for leakage from the containment. (These assumptions applied to dry containment would result in approximately 27.5% of the halogens remaining airborne, compared to 25% assumed in TID 14844.) A five hour effective half-life for fallout and plateout of all solid fission products is conservatively estimated.

The inventory of airborne fission products in the drywell available for leakage into the reactor building is (since no fuel is melted no solid fission products were released from the core):

‡ TABLE XI-8

PRIMARY CONTAINMENT AIRBORNE FISSION PRODUCT INVENTORY
(curies)

Time After Accident	Noble Gases	Halogens
30 minutes	1.4×10^6	1.4×10^5
1 hour	1.3×10^6	1.3×10^5
3 hours	1.2×10^6	1.1×10^5
10 hours	9.4×10^5	6.9×10^4
1 day	7.4×10^5	5.2×10^4
3 days	6.1×10^5	4.2×10^4
10 days	2.0×10^5	1.2×10^4

3.4.5 Fission Product Release to Secondary Containment

The primary containment leakage rates were calculated assuming that the primary containment
‡ leaks 0.5 percent of the contained free volume per 24 hours at 25 psig, and using the turbulent (rough passage) equation (1) for interpolation to higher and lower pressures. The long term primary containment pressure is shown in Figure 58b, curve b. The corresponding containment leakage is shown in Figure 58d, curve b.

1. R.R. Maccary, et al, "Leakage Characteristics of Steel Containment Vessels and the Analysis of Leakage Rate Determinations", TID-20583, May, 1954.

As fission products leak from the drywell, drywell high pressure or reactor building high radiation signals isolate the reactor building and start the standby gas treatment system. The standby gas treatment fan maintains the reactor building below atmospheric pressure and discharges a volume equivalent ‡ to 100 percent of the building volume per day through high efficiency and charcoal filters to a 310 ft. stack. The solid fission products in the reactor building would be assumed to fallout and plateout with a 12-hour half-life. All the noble gases and halogens are assumed to remain airborne.

Considering the leakage from the drywell to the reactor building, radioactive decay, fallout and plateout, the air change rate of 100 percent building volume per day, the airborne fission product inventory in the reactor building is:

‡ TABLE XI-9

REACTOR BUILDING AIRBORNE FISSION PRODUCT INVENTORY
(curies)

Time After Accident	Noble Gases	Halogens
30 minutes	9.3×10^{1}	9.0×10^{0}
1 hour	1.7×10^{2}	1.7×10^{1}
3 hours	4.8×10^{2}	4.5×10^{1}
10 hours	1.1×10^{3}	8.1×10^{1}
1 day	1.4×10^{3}	9.8×10^{1}
3 days	1.3×10^{3}	9.3×10^{1}
10 days	2.8×10^{2}	1.6×10^{1}
30 days	3.9×10^{-1}	2.9×10^{-2}

3.4.6 Discharge of Fission Products to Atmosphere

The halogens which leak from the pressure suppression containment into the reactor building are exhausted by the standby gas treatment system through a drier, a high efficiency filter and a charcoal filter. Because the high temperature and pressure steam atmosphere is contained within the pressure suppression system, the reactor building exhaust air is at low temperature and humidity and can be treated to reduce the humidity so that the filters will be very effective for removal of organic halogens. Tests on filter efficiencies have shown that inorganic halogens are removed by charcoal filters with efficiencies greater than 99.99%[1, 2] and tests on filter efficiencies have shown that organic halogens

1. Keilholtz, G.W., and Barton, C.J., ORNL-NSIC-4, "Behavior of Iodine in Reactor Containment Systems," Page 64, February 1965.

   Coconut and coal charcoal filters were tested. An elemental iodine removal efficiency greater than 99.99% is achievable with practical filter systems, even with extended operation and high steam content.

2. Adams and Browning, "International Symposium on Fission Product Release and Transport Under Accident Conditions," Paper 46, April 1965, Oak Ridge, Tenn.

   Tested bituminous coke, petroleum residue and coconut shell charcoal filters. At conditions ranging from room temperature to 150°C and from low relative humidity to steam conditions, elemental iodine is removed by practical systems with efficiencies greater than 99%. At low relative humidities all charcoal filters were effective in removing methyl iodide.

are removed by charcoal filters at a relative humidity below 30% with filter efficiencies from 99.9% to 99.9999%.[1, 2, 3, 4, 5] The charcoal filter on the EVESR at Vallecitos Atomic Power Laboratory has been retaining organic halogens produced at power operation with a filter efficiency from 99.8% to 99.9% at a relative humidity of 10 to 15%. The standby gas treatment system design will be based on the latest experimental results. The system will be designed to provide the necessary humidity control, residence time in filters, etc. Thus, with this design, the assumption of only a 99% filter efficiency for the removal of inorganic and organic halogens by the standby gas treatment system is conservative by orders of magnitude to 10^4. The compounding of conservative assumptions used in the loss of coolant analysis results in calculated doses from halogens that are 20 to 1000 times higher than actually expected.

---

1. Adams and Browning, "International Symposium on Fission Product Release and Transport Under Accident Conditions," Paper 48, April 1965, Oak Ridge, Tenn.

   Tested bituminous coke, petroleum residue and coconut shell charcoal filters. At conditions ranging from room temperature to 150°C and from low relative humidity to steam conditions, elemental iodine is removed by practical systems with efficiencies greater than 99%. At low relative humidities all charcoal filters were effective in removing methyl iodide.

2. Collins, R. D., and Hillary, "International Symposium on Fission Product Release and Transport Under Accident Conditions," Paper 44, April 1965, Oak Ridge, Tennessee.

   Zirconium clad UO_2 (unirradiated, tracer irradiated and irradiated to 100 Mwd/ton) heated to between the zirconium melting temperature and the UO_2 melting temperature in steam air atmosphere. The organic halogens were a very small fraction of the halogens released, except at the highest heating temperatures, where the organic fraction reached 2 to 3%. These tests correspond to the postulated 100% melt case where the fuel heats up in a steam-air atmosphere until the zirconium melts, allowing the fuel to fall out of the core region. The methyl iodides were filtered with coconut charcoal with an efficiency from 99 to 99.9% at 100°C.

3. Collins and Eggleton, ORNL-NSIC-4, "Behavior of Iodine in Reactor Containment Systems," February 1965, page 65.

   Methyl iodide was filtered with varieties of charcoal. (207B) coal charcoal demonstrated methyl iodide removal efficiencies from 99.99% to 99.999% at room temperature and 100°C.

4. Adams and Browning, ORNL-NSIC-4, "Behavior of Iodine in Reactor Containment Systems," February, 1965, page 65.

   Methyl iodide, in room temperature air, was passed over a 1.75 inch thick (207B) coal charcoal bed at 30 to 35 ft/min for 5 hours. With moist air and high relative humidity, methyl iodide removal efficiencies of 74% to 97.3% were obtained. But, with low relative humidity the removal efficiency was found to be 99.99%.

5. Collins, D. A., et al., "International Symposium on Fission Product Release and Transport Under Accident Conditions," Paper 45, April 1965, Oak Ridge, Tenn.

   Methyl iodide in carbon dioxide or steam was passed through charcoal filters. At low humidity coal charcoal removed methyl iodide with a 99.9999% efficiency at temperatures ranging from ambient to 100°C. At low humidity coconut charcoal removed methyl iodide with a 99.9% efficiency at 100°C. Relative humidities above 30% reduce the methyl iodide removal efficiencies of all charcoals. If the charcoal is impregnated with 4 amino pyridine or morpholine, a high methyl iodide removal efficiency (99.9%) is achieved even at 100% relative humidity.

‡ TABLE XI-10

STACK DISCHARGE RATES

(curies/sec)

Time After Accident	Noble Gases	Halogens
10 minutes	4.9×10^{-4}	3.6×10^{-7}
30 minutes	1.0×10^{-3}	9.9×10^{-7}
1 hour	2.0×10^{-3}	2.0×10^{-6}
3 hours	5.6×10^{-3}	5.3×10^{-6}
10 hours	1.3×10^{-2}	9.4×10^{-6}
1 day	1.6×10^{-2}	1.1×10^{-5}
3 days	1.6×10^{-2}	1.1×10^{-5}
10 days	3.2×10^{-3}	1.9×10^{-6}
25 days	1.4×10^{-6}	8.2×10^{-9}

3.4.7 Radiological Effects

The radiological effects, calculated as described in Section XI-4, are shown in Tables XI-11 and XI-12. These doses are far below the guideline radiation doses listed in 10 CFR 100, 25 rem whole body and 300 rem to the thyroid. There is margin in the design of the reactor and containment to absorb much larger accidents and still adequately protect the public.

‡TABLE XI-11

RADIOLOGICAL EFFECTS OF THE COOLANT LOSS ACCIDENT[1]

Distance (miles)	First 2-Hour Exposure						Total Accident Exposure					
	VS-2	MS-2	N-2	N-10	U-2	U-10	VS-2	MS-2	N-2	N-10	U-2	U-10
External Passing Cloud Dose (rem)												
1/2	9.5×10^{-6}	1.0×10^{-5}	1.0×10^{-5}	2.7×10^{-6}	1.0×10^{-5}	2.1×10^{-6}	3.9×10^{-4}	4.2×10^{-4}	4.2×10^{-4}	1.1×10^{-4}	4.2×10^{-4}	8.6×10^{-5}
1	4.4×10^{-6}	5.5×10^{-6}	5.1×10^{-6}	2.0×10^{-6}	5.1×10^{-6}	1.4×10^{-6}	1.8×10^{-4}	2.2×10^{-4}	2.1×10^{-4}	8.3×10^{-5}	2.1×10^{-4}	5.6×10^{-4}
5	-	-	-	1.5×10^{-7}	-	6.2×10^{-8}	3.6×10^{-5}	4.0×10^{-5}	2.8×10^{-5}	5.9×10^{-6}	1.0×10^{-5}	2.5×10^{-6}
9	-	-[3]	-	4.4×10^{-8}	-	1.7×10^{-8}	1.3×10^{-5}	1.5×10^{-5}	5.8×10^{-6}	1.8×10^{-6}	2.4×10^{-6}	6.8×10^{-7}
12	-	-	-	2.4×10^{-8}	-	7.6×10^{-9}	3.7×10^{-6}	4.7×10^{-6}	1.4×10^{-6}	9.6×10^{-7}	5.2×10^{-7}	3.1×10^{-7}
Lifetime Thyroid Dose (rem)												
1/2	a[2]	1.2×10^{-10}	1.7×10^{-6}	2.9×10^{-8}	1.4×10^{-5}	1.5×10^{-6}	a	4.7×10^{-9}	6.2×10^{-5}	1.1×10^{-6}	5.4×10^{-4}	5.6×10^{-5}
1	a	1.8×10^{-8}	6.4×10^{-6}	5.4×10^{-7}	6.4×10^{-6}	8.6×10^{-7}	a	6.6×10^{-7}	2.4×10^{-4}	2.0×10^{-5}	2.4×10^{-4}	3.2×10^{-5}
5	a	1.2×10^{-6}	1.2×10^{-6}	2.3×10^{-7}	5.0×10^{-7}	9.1×10^{-8}	a	4.4×10^{-5}	4.7×10^{-5}	8.8×10^{-6}	1.9×10^{-5}	3.4×10^{-6}
9	a	1.3×10^{-6}	5.0×10^{-7}	9.9×10^{-8}	1.9×10^{-7}	3.6×10^{-8}	2.4×10^{-9}	4.9×10^{-5}	1.9×10^{-5}	3.8×10^{-6}	7.3×10^{-6}	1.4×10^{-6}
12	5.5×10^{-10}	1.2×10^{-6}	3.5×10^{-7}	7.1×10^{-8}	1.4×10^{-7}	2.6×10^{-8}	2.1×10^{-8}	4.5×10^{-5}	1.3×10^{-5}	2.7×10^{-6}	5.1×10^{-6}	9.7×10^{-7}
Fallout Dose (rem)												
1/2							a	a	6.8×10^{-7}	6.1×10^{-8}	1.1×10^{-5}	5.5×10^{-6}
1							a	3.2×10^{-9}	2.1×10^{-6}	8.3×10^{-7}	4.4×10^{-6}	3.0×10^{-6}
5							a	3.6×10^{-7}	4.9×10^{-7}	5.1×10^{-7}	3.3×10^{-7}	3.3×10^{-7}
9							a	4.0×10^{-7}	2.1×10^{-7}	1.7×10^{-7}	1.4×10^{-7}	1.3×10^{-7}
12							1.9×10^{-10}	3.6×10^{-7}	1.4×10^{-7}	1.4×10^{-7}	8.4×10^{-8}	8.5×10^{-8}

Direct Radiation (roentgen/h)

Peak 2 hour dose rate at 1/2 mile is 9×10^{-7}

	Fallout Dose - Washout (rem) - Total Dose
1/2	1.1×10^{-5}
1	4.2×10^{-6}
5	3.9×10^{-7}
9	1.5×10^{-7}
12	9.5×10^{-8}

	Meteorology	Wind Velocity
VS-2	Very Stable	2 mph
MS-2	Moderately Stable	2 mph
N-2	Neutral	2 mph
N-10	Neutral	10 mph
U-2	Unstable	2 mph
U-10	Unstable	10 mph

(1) Calculated using meteorological diffusion methods described in Section XI-4.3.2 to Section XI-4.3.2f

(2) The symbol "a" means less than 1×10^{-10}

(3) First two hour dose is zero since the time of cloud travel is greater than two hours

‡TABLE XI-12

RADIOLOGICAL EFFECTS OF THE COOLANT LOSS ACCIDENT[1]

(HW-SA-2809 Method)

Distance (miles)	First 2-Hour Exposure						Total Accident Exposure					
	External Passing Cloud Dose (rem)											
	VS-2	MS-2	N-2	N-10	U-2	U-10	VS-2	MS-2	N-2	N-10	U-2	U-10
1/2	9.5×10^{-6}	1.0×10^{-5}	1.0×10^{-5}	2.7×10^{-6}	1.0×10^{-5}	2.1×10^{-6}	8.0×10^{-3}	8.6×10^{-3}	8.6×10^{-3}	2.3×10^{-3}	8.6×10^{-3}	1.8×10^{-3}
1	4.4×10^{-6}	5.5×10^{-6}	5.1×10^{-6}	2.0×10^{-6}	5.1×10^{-6}	1.4×10^{-6}	3.7×10^{-3}	4.6×10^{-3}	4.3×10^{-3}	1.7×10^{-3}	4.3×10^{-3}	1.2×10^{-3}
5	-	-[3]	-	1.5×10^{-7}	-	6.2×10^{-8}	7.4×10^{-4}	8.3×10^{-4}	5.9×10^{-4}	1.2×10^{-4}	2.1×10^{-4}	5.2×10^{-5}
9	-		-	4.4×10^{-8}	-	1.7×10^{-8}	2.6×10^{-4}	3.1×10^{-4}	1.2×10^{-4}	3.7×10^{-5}	4.9×10^{-5}	1.4×10^{-5}
12	-	-	-	2.4×10^{-8}	-	7.6×10^{-9}	7.7×10^{-5}	9.9×10^{-5}	2.9×10^{-5}	2.0×10^{-5}	1.1×10^{-5}	6.5×10^{-6}
	Lifetime Thyroid Dose (rem)											
1/2	a[2]	3.5×10^{-10}	3.3×10^{-6}	1.3×10^{-7}	1.2×10^{-5}	2.6×10^{-6}	a	2.9×10^{-7}	2.8×10^{-3}	1.1×10^{-4}	1.0×10^{-2}	2.1×10^{-3}
1	a	5.3×10^{-8}	1.3×10^{-5}	2.2×10^{-6}	5.5×10^{-6}	1.4×10^{-6}	a	4.3×10^{-5}	1.1×10^{-2}	1.8×10^{-3}	4.5×10^{-3}	1.1×10^{-3}
5	a	3.3×10^{-6}	2.1×10^{-6}	6.4×10^{-7}	3.5×10^{-7}	9.1×10^{-8}	a	2.7×10^{-3}	1.7×10^{-3}	5.2×10^{-4}	2.9×10^{-4}	7.5×10^{-5}
9	1.6×10^{-10}	3.2×10^{-6}	7.2×10^{-7}	2.2×10^{-7}	1.1×10^{-7}	2.9×10^{-8}	1.3×10^{-7}	2.6×10^{-3}	5.9×10^{-4}	1.8×10^{-4}	9.0×10^{-5}	2.4×10^{-5}
12	1.3×10^{-9}	2.8×10^{-6}	4.7×10^{-7}	1.4×10^{-7}	7.1×10^{-8}	1.9×10^{-8}	1.1×10^{-6}	2.3×10^{-3}	3.9×10^{-4}	1.2×10^{-4}	5.8×10^{-5}	1.5×10^{-5}
	Fallout Dose (rem)											
1/2							a	1.4×10^{-9}	4.0×10^{-5}	3.5×10^{-6}	1.2×10^{-4}	1.3×10^{-4}
1							a	1.6×10^{-7}	5.3×10^{-5}	4.4×10^{-5}	4.9×10^{-5}	6.0×10^{-5}
5							a	1.4×10^{-5}	1.1×10^{-5}	1.7×10^{-5}	2.9×10^{-5}	4.2×10^{-6}
9							2.6×10^{-10}	1.2×10^{-5}	4.1×10^{-6}	5.9×10^{-6}	1.0×10^{-6}	1.3×10^{-6}
12							5.6×10^{-9}	1.1×10^{-5}	2.3×10^{-6}	3.5×10^{-6}	5.5×10^{-7}	7.6×10^{-7}

Direct Radiation (roentgen/h)

Peak 2 hour dose rate at 1/2 mile is 9×10^{-7}

Fallout Dose - Washout (rem) - Total Dose

1/2	1.3×10^{-4}
1	5.0×10^{-5}
5	4.3×10^{-6}
9	1.6×10^{-6}
12	8.2×10^{-7}

	Meteorology	Wind Velocity
VS-2	Very Stable	2 mph
MS-2	Moderately Stable	2 mph
N-2	Neutral	2 mph
N-10	Neutral	10 mph
U-2	Unstable	2 mph
U-10	Unstable	10 mph

(1) Calculated using meteorological diffusion method in HW-SA-2809, see Section XI-4.3.2h

(2) The symbol "a" means less than 1×10^{-10}

(3) First two hours dose is zero since the time of cloud travel is greater than two hours

3.5 Containment Capability Evaluation

3.5.1 Introduction

In order to answer questions about and assess the ultimate containment capability of this plant, an analysis of independent multiple and simultaneous failures of core cooling systems and containment cooling systems following a loss of coolant has been made. In the previous sections (XI-3.4), the independent and simultaneous failure of one core spray system and one containment spray system was evaluated, including off-site radiological consequences. Although this would appear to be the ultimate in "worst-case" analysis necessary (especially considering the design and testing of cooling systems), a full spectrum analysis of cooling system failures is included. For one analysis, failure of all the cooling systems but one containment spray system, the off-site radiological consequences are also included. This analysis demonstrates that, even here, the off-site doses would remain well below those specified in 10 CFR 100.

3.5.2 Failure Analysis of Core and Containment Cooling Systems - Containment Pressure

The long-term pressure response of the containment following a loss of coolant accident has been analyzed under the following conditions:

a. All engineered safeguards function
b. One containment cooling system does not function
c. Both containment cooling systems do not function
d. The core spray systems do not function, assuming:
   1. No metal-water reaction
   2. Metal-water reaction as defined in the next section
e. Both core spray systems and both containment cooling systems do not function, assuming:
   1. No metal-water reaction
   2. Metal-water reaction is defined in the next section
f. Both core sprays and one containment cooling system do not function and a metal-water reaction takes place.

The procedure for calculating the pressure transients in the drywell and suppression pool in each of these cases will be described first and then the application to each case will be described. The initial pressure response of the system during the period when the reactor vessel is blowing down (the first 30 sec. after the break) is reported above (Section XI-3.4). The same response applied to all cases considered here. For each case, the temperature of the suppression pool was calculated as a function of time conservatively considering the pool to be the only heat absorber in the system. The effects of decay energy, stored energy in the core and possible energy from the metal-water reaction on the pool temperature were included. Also, if applicable in the particular case, the effect of heat exchangers in the drywell spray loop was included.

The drywell temperature is calculated considering an energy balance on the drywell spray and/or core spray. The drywell spray enters at the discharge temperature of the heat exchanger and the core spray enters at the suppression pool temperature. The combined flows (drywell spray and core spray) drain back to the suppression pool, having been heated by the decay energy, stored energy in the core

and any possible metal-water reaction chemical energy. The drywell temperature is then taken to be 5°F hotter than the exiting flow. Where it is assumed that the drywell and core sprays are not operating, no credit for heat removal is taken.

The total number of moles of non-condensible gas in the entire system (drywell and suppression chamber) is determined from the amount of gas originally in the system plus any gas generation from a possible metal-water reaction.

With the drywell temperature, suppression pool temperature and moles of gas in the system, the system pressure is known. It was assumed conservatively that the drywell and suppression chamber gases are saturated. Also it was assumed that the drywell and suppression chamber are at equal pressure, which is reasonable since the pressure difference cannot exceed 4 feet of water (1.8 psi), the vent submergence depth, after the initial reactor blowdown.

Where it is assumed that there is no drywell spray or core spray, all the noncondensible gases are conservatively assumed to be in the suppression chamber.

a. All engineering safeguards function.

The decay energy, stored in the core, and chemical energy were removed from the core by the core spray as predicted by the computer code described in section XI-3.4. The resultant metal-water reaction extent was less than 0.5%. The pressure response of the system is shown as curve (a) in Figure 58b, and the drywell temperature for this case is shown in Figure 58c. The drywell spray was initiated at 60 sec. after the break and the system pressure rapidly decayed from the calculated equilibrium following the blowdown as also shown on Figure 58b, curve (a). The rapid drop is due to the quenching of the steam in the drywell caused by the drywell spray.

b. One containment cooling loop does not function.

This is the same as (a) except that the containment spray is reduced. The pressure response is shown in Figure 58b curve (b) and the drywell temperature response in Figure 58c curve (b).

c. Both containment cooling loops do not function.

This case was handled in the same manner as (a) except no drywell spray was used. The pressure response is shown in Figure 58b curve (c) and the drywell temperature response in Figure 58c curve (c). Note that system pressure increases monotonically, as is to be expected, since without the cooling loop heat exchangers in operation the system's energy increases indefinitely due to core decay energy.

d. (1) The core spray systems do not function and no metal-water reaction takes place.

It was assumed that the decay energy, stored core energy and chemical energy are released to the containment uniformly over a one half hour period. This duration is consistent with core thermal response reported in Section XI-3.5.3. A model consistent with this assumption involves a water supply in the bottom of the vessel for releasing energy from the molten material dropping from the core region.

The system pressure for this case is shown in Figure 58b, curve (d-1) and the temperature response of the drywell is shown in Figure 58c, curve d-1. The response of the drywell for case "a" and "d-1" are sufficiently similar to be plotted as one characteristic. The same energy within the vessel is assumed to be transported to the drywell in both cases.

d. (2) Two core spray systems do not function and a metal-water reaction takes place.

This was calculated in the same manner as (d-1) except that the metal-water reaction was assumed to take place in the uniform manner over a one-half hour duration.

Since the energy and hydrogen release from the reactor vessel to the containment system are based on uniform intensity for the duration of the release, a consistent model which involves a water supply in the bottom of the vessel (to allow the molten material dropping from the core region to react with water) is used. The potential metal-water reaction as molten metal fell into the water and released its energy was included. The smallest potential drop sizes of molten metal which might occur from the fuel assemblies were determined by a surface tension model which has been shown experimentally to give very good results. Molten zircaloy drops on the order of 0.350 to 0.400 inch were predicted. Employing the model of ANL-6548[1] for extent of metal water reaction during droplet quenching in hot water, an additional reaction of 4% is indicated.

Therefore, the analysis reported in Section XI-3.5.3 indicated that on the basis of the core meltdown model, an in-core reaction of 24.5% could occur. An additional 4% metal water reaction occurs when the melted zirconium falls into the bottom of the vessel. The pressure transients reported in this investigation are based on a total reaction of 24.5% plus 4% of the balance for a total of 27.5%.

The pressure response of the system is shown in Figure 58b curve (d-2) and the temperature response of the drywell in Figure 58c, curve (d-2). Note that the pressure and temperature reach a peak value at 1800 sec (1/2 hour) which corresponds to the end of the uniform energy and gas release. At this time the energy release from the core is reduced to the decay power level.

e. (1) Both core spray systems and both containment cooling loops do not function and no metal water reaction takes place.

To be conservative in the calculation of pressure, it was assumed that the energy released from the core was delivered to the suppression pool in a uniform manner over one half hour and that all non-condensible gases are in the suppression chamber. This procedure maximizes the suppression pool temperature and gas density making the calculated system pressure conservative. The pressure response of the system is shown in Figure 58b, curve (e-1).

(1) "Studies of Metal-Water Reactions at High Temperature, III. Experimental and Theoretical Studies of the Zirconium-Water Reaction," Louis Baker and L. C. Just, ANL-6548, May 1962.

The curve shows that the system pressure rises monotonically since there is no energy rejected from the system.

The drywell temperature can be estimated to be approximately equal to the saturation temperature of steam at the system pressure.

e. (2) Both core spray systems and both containment cooling loops do not function and a metal-water reaction takes place.

The case was calculated in the same manner as (e-1) except that metal-water reaction was added which resulted in a 27.5% reaction over a one half hour period as in (d-2). The pressure response of the system is shown in Figure 58b curve (e-2). The drywell temperature can be estimated to be approximately equal to the saturation temperature of the steam at the system pressure.

f. Both core spray systems do not function and one containment cooling loop does not function and a metal water reaction takes place.

The case was calculated in the same manner as case (d-2) except only one containment cooling loop functions. The resulting pressure and temperature responses are shown in Figure 58b, curve (f) and Figure 58c, curve (f) respectively. Note the maximum pressure (42 psig) is less than the design pressure of 62 psig.

It is this combination of effective engineering safeguards that has served as a basis for the generation of the containment capability characteristics reported in Section V-3.

3.5.3 Core Response with No Core Cooling

Recirculation Line Rupture

The instantaneous severance of a main recirculation line with the subsequent complete loss of coolant from the vessel has been analyzed by the same method used in the previous analysis, Section XI-3.4, but it is assumed that neither of the core spray systems are effective and that the reactor core completely heats up to melting temperature and melts.

The methods of analysis were the same as those employed in all reactor core heat up calculations conducted by the General Electric Company. The entire determination is conducted by digital computer programs. The reactor core is subdivided into radial and axial positions, the fuel bundles are further divided into zones of fuel rods, then the fuel reactor core subdivision allows the analysis to be conducted with a refined specification of power distribution throughout the reactor core, radially and axially, as well as throughout the fuel assemblies and fuel rods. With this same degree of subdivision the temperature distributions throughout the reactor core can be quite precisely determined throughout the course of the temperature transient. Although radiation heat transfer from fuel rod to fuel rod and to the channel box is considered by the program, there is no heat loss from the overall reactor core itself allowed. Thus all decay heat and metal-water reaction heat during the core heat up process is retained for the core in the form of sensible heat and latent heat of fusion. Fuel channel box material is analyzed separately from the fuel cladding and fuel pellet material. Because of the emphasis placed on the existence of any metal water reaction, the digital computer program also involves a continuous calculation of the extent and current rate

of the metal water reaction for all metal surfaces within the reactor core on the above described subdivision basis. The metal-water reaction is defined in the computer program by the expression of Baker, (op. cit. ANL 6548), which defines the rate of reaction as a function of both local metal temperature and the current extent of the reaction.

The reaction terminates because the Zircaloy melts, runs down the hot fuel surfaces, falls through the end plate of the fuel, and into the water below the core where it is quenched. Water is expected to be present at the bottom of the vessel, entering either through the core spray system, the feedwater system, or control rod drive system.

Calculations of the droplet diameter based on surface tension and the fuel end plate dimensions gave droplet sizes 3/8 inch in diameter. Molten drop reaction rates in water temperatures of interest given in ANL 6548, Figure 26, indicate that a reaction depth of 60 microns correlated with observed droplet reaction test data. Application of the 60 micron reaction depth to the mean diameter calculated resulted in a 4 percent reaction of the molten Zircaloy leaving the core. Thus a total estimate 24.5 percent in core and 3 percent i.e., 0.04 x (100 - 24.5), post-melt reaction resulted in the total of 27.5 percent reaction in a minimum time of 30 minutes.

Zircaloy rod meltdown tests have shown that molten Zircaloy will indeed leave the core in drops of definite sizes. These tests were conducted in a test assembly with simulated fuel end plates and four induction heated Zircaloy rods. One test with nine rods and an actual end plate was also conducted giving similar results. All these experiments show that a normal statistical distribution of droplet sizes occur, ranging from a minimum of 0.137 inch diameter to a maximum of 0.477 inch diameter with a mean diameter of 0.269 inch. Application of the 60 micron reaction depth to the various sized drops showed an overall reaction of 5 percent not appreciably different from that calculated initially. In addition, the tests clearly showed that the molten drops were cooled by the water thus terminating any further reaction.

The realistic estimate above is well within the capability of the containment system, which from above is seen to be a 42 percent reaction when it occurs in a half hour, the minimum time over which the reaction is expected to occur. It is important to note that if the reaction were to take place over a longer period of time, which can be very likely, the containment capability increases. For example, the capability is 55 percent metal-water reaction if it occurs over a one hour period, 66 percent if over a 2 hour period, and 74 percent if over a 4 hour period. This increase in containment capability results from the heat removal capacity of the containment cooling system.

Figure 59 shows the fuel cladding temperature and the amount of metal water reaction associated with a "non-cooled core" heat up and melt.

1. The maximum extent of metal water reaction consisted of approximately 24.5% of all the available metal (channel boxes and cladding) within the core region. It is assumed that there is an unlimited amount of steam available to support the metal-water reaction. Sufficient heat is released from this amount of reaction to heat up all the fuel cladding and channel boxes in the core from approximately 1800°F to the clad melt temperature and melt all the cladding and channel boxes. Thus 24.5% indicates a bounds for metal water reaction.

2. The total duration of the reactor core meltdown is approximately one hour. However, the reactor core is effectively melted (90%) in about half an hour. The calculations show (see Figure 59) that once an insulated fuel assembly is heated to approximately 1800°F, the rate of metal water reaction begins to dominate and the remainder of the heatup is practically a straight function of the heat of metal water reaction.

Rupture of Smaller Coolant Lines

For a main recirculation line rupture at rated power and pressure, compounded with failure of all core cooling systems, approximately 25% of the zirconium in the core region would react with water, and the entire core would melt in approximately 40 minutes after the rupture. For a small line break, with a three hour blowdown, it has been calculated that approximately 23% of the zirconium would react with water, and the core would melt within 2 hours after the blowdown or 5 hours after the rupture.

During the blowdown the main parameters of interest include core pressure differentials, maximum drywell pressure, core cooling, and fuel rod cladding integrity. The pressure differentials across the vessel internals as a result of a small line break would not significantly differ from those existing during normal operation. The vessel blowdown rate would be much lower for a small line break and the maximum drywell pressure during the blowdown would only be a few psig.

For the small line break, the core would be cooled during depressurization to essentially the coolant temperature (300 to 500°F) at the completion of the blowdown. The fuel rod cladding temperature would be essentially that of the coolant during the blowdown and therefore cladding integrity would be maintained. Following the blowdown, the parameters of interest include cladding perforation, fission product release, core melt and metal-water reaction. For the small break, the fuel rod cladding did not reach perforation temperature for approximately 3-1/4 hours after the rupture as compared to approximately 1-1/2 minutes for the large break. The core reached 3000°F at approximately 3-1/3 hours for the small break as compared to minutes for the large recirculation break. Therefore, since the majority of fission products are not released until above 3000°F, the fission products would have a longer decay time and the corresponding total curies released for a small break would be lower than for the recirculation line break. Since the time period of release of hydrogen gas from the metal-water reaction for the small break is considerably longer than for the large break the containment spray system can easily quench the steam in the drywell and cool the hydrogen. Therefore, the resulting pressure in the containment systems will be lower following a small break. The lower fission product leakage rates, due to both lower containment pressures and lower levels of activity being released, result in lower doses. For comparison purposes, several pertinent parameters are given in Table XI-13. In summary, evaluations of the spectrum of small line breaks

that the extent of metal-water reaction is very insensitive to the break size and that, in all non-core-cooled cases, the smaller break and longer depressurization results in less severe effects. Because the small line breaks would result in longer times for blowdown and core heatup, the potential for the termination of the accident by some delayed automatic or manual action is considerable.

TABLE XI-13

RESULTS OF LOSS OF COOLANT ACCIDENT

	Main Recirculation Line Break	Typical Small Line Break
Time for blowdown	24 seconds	3 hours
Time for 1st rod to perforate	8 seconds	3.2 hours
Time for all rods to perforate	0.8 hours	4.8 hours
Time for 1st rod to redistribute temp.	2 minutes	3.3 hours
Time for all rods at redistribution temp.	1 hour	5.1 hours
Start of metal water reaction	3 minutes	3.4 hours
Extent of metal-water reaction	~ 25%	~ 23%
Time to maximum metal water reaction	0.7 hours	5.1 hours

The evaluation of loss of coolant accidents is based upon the failure of any pipe within the drywell as noted above. A catastrophic failure mode of the reactor vessel is considered to be not credible in these analyses. This conclusion has been reached principally on the basis of the extremely stringent standards which have been adopted and utilized by the nuclear industry in the design and fabrication of reactor pressure vessels, and upon the operating conditions to which the vessels will be subjected.

The potential causes for catastrophic vessel failure have been intensively studied and the factors which cause such failures are reasonably well understood. Major factors of importance which are considered in establishing the proper design, fabrication, and operational performance of the vessel in order to preclude a brittle fracture mode include the following: (1) rigorous application of Section III of the ASME Boiler and Pressure Vessel Code, (2) assurance that all SA302B materials used in the pressure vessel have a low nil ductility temperature (NDT), (3) the materials used inherently display a high upper shelf impact energy, and (4) that the vessels be operated with appropriate margin above the nil ductility temperature.

In the design and fabrication of the vessel and its appurtanences, detailed procedures have been devised and are followed to assure that the vessel will be of high integrity when completed. Stress analyses are made in accordance with Section III of the ASME Code so that assurance is provided that the vessel design will eliminate regions of overstress. Quality control procedures are placed into effect to assure that (1) materials are specified and utilized which have physical, mechanical, and metallurgical properties consistent with a low nil ductility temperature and an inherent high upper shelf impact energy, (2) that fabrication and inspection requirements are properly delineated so that the various processes of metal working, welding, heat treatment, radiography, etc., are properly applied, and (3) that integrity of the completed vessel is demonstrated through the application of proper testing.

During operation of the plant the vessel will be operated in such a manner that conditions required for brittle fracture will be entirely avoided. The vessel will not be pressurized at a temperature below NDT + 60°F. The design of the reactor core and the internal vessel arrangement is such that the upper level of integrated fast neutron exposure of the vessel wall is expected to be in the range of 5×10^{17} neutrons/sq. cm., and will thus be sufficiently low that adverse radiation effects and an increase of the nil ductility temperature will be negligible. As a further control, vessel material surveillance samples will be irradiated within the vessel so that status of the NDT may be monitored on a timely basis.

In summary, it has been concluded that by attention to the proper design, material selection, fabrication and quality control procedures for the vessel, and by prescribing operating conditions above the NDT range, failure of the vessel will not occur.

3.5.4 Radiological Effects - No Core Cooling

The doses to off-site persons are calculated for the assumed recirculation line rupture compounded by simultaneous failure of both independent core spray systems and failure of one containment spray system. The core heatup and extent of metal water reaction (27.5%) were described in the previous section (XI-3.5.3). The fuel stored energy, core decay heat, metal water reaction energy and hydrogen were added to the containment. One containment spray system functioned to remove the energy.

Figure 59 shows the fuel cladding temperature at various times. Figure 59a indicates the percentile of UO_2 above the recrystallization temperature of 3000°F. The core spray will come on within a minute following the break and will prevent the UO_2 from reaching 3000°F as seen in Figure 59a, even if it becomes effective as late as 5 minutes after the break. The amount of hydrogen produced from any metal-water reaction would be below the flamability limit even if the core spray came on as late as four minutes after the break.

The containment pressure and temperature transients are given as curve (f) of Figures 58b and 58c. The assumptions for fission product activity in the core; release of fission products from melted fuel; plateout in reactor vessel and piping; solids fallout in the reactor building; and discharge through filters to the stack are described in the loss of coolant accident analysis (Section XI-3.4). Even though the assumptions for halogen chemical form (high fraction of organic halogens) and disposition in the containment (as described in Section XI-3.4) are somewhat more conservative than those used in TID 14844, they are used because they are on the conservative end of the range of potential variations.

The resulting airborne fission product activity in the reactor building are:

‡ TABLE XI-14

REACTOR BUILDING AIRBORNE FISSION PRODUCT ACTIVITY

(curies)

Time After Accident	Noble Gases	Halogens	Volatile Solids	Other Solids
30 minutes	2.0×10^{4}	2.0×10^{3}	6.5×10^{3}	8.5×10^{2}
1 hour	4.6×10^{4}	4.6×10^{3}	1.1×10^{4}	1.8×10^{3}
3 hours	1.4×10^{5}	1.3×10^{4}	2.4×10^{4}	4.1×10^{3}
10 hours	3.5×10^{5}	2.6×10^{4}	1.6×10^{4}	3.9×10^{3}
1 day	5.1×10^{5}	3.6×10^{4}	3.3×10^{3}	8.0×10^{2}
3 days	6.3×10^{5}	4.3×10^{4}	5.9×10^{0}	1.5×10^{0}
10 days	2.2×10^{5}	1.3×10^{4}	7.5×10^{-6}	3.4×10^{-6}
25 days	3.0×10^{4}	2.3×10^{3}	1.8×10^{-15}	1.4×10^{-15}

The resulting fission product discharge rate from the stack is:

‡ TABLE XI-15

STACK DISCHARGE RATE

(curies/sec)

Time After Accident	Noble Gases	Halogens	Volatile Solids	Other Solids
30 minutes	2.3×10^{-1}	2.3×10^{-4}	7.5×10^{-4}	9.8×10^{-5}
1 hour	5.3×10^{-1}	5.4×10^{-4}	1.3×10^{-3}	2.0×10^{-4}
3 hours	1.6×10^{0}	1.5×10^{-3}	2.8×10^{-3}	4.7×10^{-4}
10 hours	4.0×10^{0}	3.0×10^{-3}	1.9×10^{-3}	4.5×10^{-4}
1 day	6.0×10^{0}	4.2×10^{-3}	3.8×10^{-4}	9.3×10^{-5}
3 days	7.3×10^{0}	5.0×10^{-3}	6.9×10^{-7}	1.8×10^{-7}
10 days	2.5×10^{0}	1.5×10^{-3}	8.7×10^{-13}	3.9×10^{-13}
25 days	3.5×10^{-1}	2.7×10^{-4}	2.1×10^{-22}	1.8×10^{-22}

The off-site radiological effects of this fission product release, calculated as described in Section XI-4 are shown in Tables XI-16 and XI-17.

‡ TABLE XI-16

RADIOLOGICAL EFFECTS OF THE COOLANT LOSS 100% MELT ACCIDENT[1]

Distance (miles)	First 2-Hour Exposure						Total Accident Exposure					
	External Passing Cloud Dose (rem)											
	VS-2	MS-2	N-2	N-10	U-2	U-10	VS-2	MS-2	N-2	N-10	U-2	U-10
1/2	3.1×10^{-3}	3.3×10^{-3}	3.3×10^{-3}	8.9×10^{-4}	3.3×10^{-3}	6.9×10^{-4}	1.4×10^{-1}	1.5×10^{-1}	1.5×10^{-1}	4.0×10^{-2}	1.5×10^{-1}	3.1×10^{-2}
1	1.4×10^{-3}	1.8×10^{-3}	1.7×10^{-3}	6.6×10^{-4}	1.7×10^{-3}	4.5×10^{-4}	6.4×10^{-2}	8.0×10^{-2}	7.5×10^{-2}	3.0×10^{-2}	7.5×10^{-2}	2.0×10^{-2}
5	-	-	-	4.7×10^{-5}	-	2.0×10^{-5}	1.3×10^{-2}	1.4×10^{-2}	1.0×10^{-2}	2.1×10^{-3}	3.5×10^{-3}	9.1×10^{-4}
9	-	- (3)	-	1.4×10^{-5}	-	5.5×10^{-6}	4.5×10^{-3}	5.3×10^{-3}	2.1×10^{-3}	6.4×10^{-4}	8.6×10^{-4}	2.5×10^{-4}
12	-	-	-	7.7×10^{-6}	-	2.5×10^{-6}	1.3×10^{-3}	1.7×10^{-3}	5.1×10^{-4}	3.5×10^{-4}	1.9×10^{-4}	1.1×10^{-4}
	Lifetime Thyroid Dose (rem)											
1/2	a[2]	3.4×10^{-8}	4.5×10^{-4}	7.9×10^{-6}	3.8×10^{-3}	3.0×10^{-4}	a	1.8×10^{-6}	2.4×10^{-2}	4.2×10^{-4}	2.1×10^{-1}	2.1×10^{-2}
1	a	4.7×10^{-6}	1.7×10^{-3}	1.5×10^{-4}	1.7×10^{-3}	2.3×10^{-4}	a	2.5×10^{-4}	9.3×10^{-2}	7.8×10^{-3}	9.2×10^{-2}	1.2×10^{-2}
5	a	3.1×10^{-4}	3.3×10^{-4}	6.3×10^{-5}	1.4×10^{-4}	2.5×10^{-5}	1.9×10^{-10}	1.7×10^{-2}	1.8×10^{-2}	3.4×10^{-3}	7.3×10^{-3}	1.3×10^{-3}
9	1.7×10^{-8}	3.5×10^{-4}	1.3×10^{-4}	2.7×10^{-5}	5.2×10^{-5}	9.8×10^{-6}	9.3×10^{-7}	1.9×10^{-2}	7.2×10^{-3}	1.4×10^{-3}	2.8×10^{-3}	5.2×10^{-4}
12	1.5×10^{-7}	3.3×10^{-4}	9.5×10^{-5}	1.9×10^{-5}	3.7×10^{-5}	6.9×10^{-6}	8.0×10^{-6}	1.7×10^{-2}	5.1×10^{-3}	1.0×10^{-3}	2.0×10^{-3}	3.7×10^{-4}
	Lifetime Lung Dose (rem)											
1/2							a	3.4×10^{-8}	4.5×10^{-4}	8.1×10^{-6}	4.0×10^{-3}	4.2×10^{-4}
1							a	4.8×10^{-6}	1.8×10^{-3}	1.5×10^{-4}	1.8×10^{-3}	2.5×10^{-4}
5							a	8.3×10^{-5}	3.6×10^{-4}	6.8×10^{-5}	1.5×10^{-4}	2.7×10^{-5}
9							1.8×10^{-8}	7.6×10^{-6}	1.5×10^{-4}	3.0×10^{-5}	5.9×10^{-5}	1.1×10^{-5}
12							1.5×10^{-7}	1.5×10^{-6}	1.1×10^{-4}	2.2×10^{-5}	4.2×10^{-5}	8.0×10^{-6}
	Lifetime Bone Dose (rem)											
1/2							a	5.9×10^{-7}	7.9×10^{-3}	1.4×10^{-4}	6.9×10^{-2}	7.3×10^{-3}
1							a	8.3×10^{-5}	3.1×10^{-2}	2.6×10^{-3}	3.2×10^{-2}	4.3×10^{-3}
5							a	1.4×10^{-3}	6.2×10^{-3}	1.2×10^{-3}	2.6×10^{-3}	4.7×10^{-4}
9							3.1×10^{-7}	1.3×10^{-4}	2.6×10^{-3}	5.2×10^{-4}	1.0×10^{-3}	1.9×10^{-4}
12							2.6×10^{-6}	2.6×10^{-5}	1.8×10^{-3}	3.8×10^{-4}	7.2×10^{-4}	1.4×10^{-4}
	Fallout Dose (rem)											
1/2							a	2.3×10^{-8}	3.9×10^{-4}	3.5×10^{-5}	6.2×10^{-3}	3.1×10^{-3}
1							a	1.8×10^{-6}	1.2×10^{-3}	4.7×10^{-4}	2.6×10^{-3}	1.7×10^{-3}
5							a	2.0×10^{-4}	2.8×10^{-4}	2.9×10^{-4}	1.9×10^{-4}	1.9×10^{-4}
9							a	2.3×10^{-4}	1.2×10^{-4}	1.0×10^{-4}	7.7×10^{-5}	7.2×10^{-5}
12							1.1×10^{-7}	2.0×10^{-4}	7.5×10^{-5}	7.9×10^{-5}	4.9×10^{-5}	4.8×10^{-5}

Direct Radiation (roentgen/h)

Peak dose rate at 1/2 mile is 4×10^{-4}

Fallout Dose - Washout (rem)

1/2	6.5×10^{-3}
1	2.8×10^{-3}
5	2.2×10^{-4}
7	8.8×10^{-5}
9	5.4×10^{-5}

	Meteorology	Wind Velocity
VS-2	Very stable	2 mph
MS-2	Moderately stable	2 mph
N-2	Neutral	2 mph
N-10	Neutral	10 mph
U-2	Unstable	2 mph
U-10	Unstable	10 mph

(1) Calculated using meteorological diffusion methods described in Sections XI-4.3.2 to XI-4.3.2f.
(2) The symbol "a" means less than 1×10^{-10}.
(3) First two-hour dose is zero since the time of cloud travel is greater than two hours.

‡TABLE XI-17

RADIOLOGICAL EFFECTS OF THE COOLANT LOSS 100% MELT ACCIDENT[1]

(HW-SA-2809 Method)

Distance (miles)	First 2-Hour Exposure						Total Accident Exposure					
	External Passing Cloud Dose (rem)											
	VS-2	MS-2	N-2	N-10	U-2	U-10	VS-2	MS-2	N-2	N-10	U-2	U-10
1/2	3.1×10^{-3}	3.3×10^{-3}	3.3×10^{-3}	8.9×10^{-4}	3.3×10^{-3}	6.9×10^{-4}	4.5×10^{0}	4.8×10^{0}	4.8×10^{0}	1.3×10^{0}	4.8×10^{0}	1.0×10^{0}
1	1.4×10^{-3}	1.8×10^{-3}	1.7×10^{-3}	6.6×10^{-4}	1.7×10^{-3}	4.5×10^{-4}	2.1×10^{0}	2.6×10^{0}	2.4×10^{0}	9.6×10^{-1}	2.4×10^{0}	6.6×10^{-1}
5	-	-	-	4.7×10^{-5}	-	2.0×10^{-5}	4.1×10^{-1}	4.7×10^{-1}	3.3×10^{-1}	6.9×10^{-2}	1.2×10^{-1}	2.9×10^{-2}
9	-	-[3]	-	1.4×10^{-5}	-	5.5×10^{-6}	1.5×10^{-1}	1.7×10^{-1}	6.7×10^{-2}	2.1×10^{-2}	2.8×10^{-2}	7.9×10^{-3}
12	-	-	-	7.7×10^{-6}	-	2.5×10^{-6}	4.3×10^{-2}	5.5×10^{-2}	1.6×10^{-2}	1.1×10^{-2}	6.0×10^{-2}	3.6×10^{-3}
	Lifetime Thyroid Dose (rem)											
1/2	a[2]	9.4×10^{-8}	9.1×10^{-4}	3.6×10^{-5}	3.3×10^{-3}	7.1×10^{-4}	a	1.8×10^{-4}	1.8×10^{0}	6.9×10^{-2}	6.4×10^{0}	1.4×10^{0}
1	a	1.4×10^{-5}	3.6×10^{-3}	6.1×10^{-4}	1.5×10^{-3}	3.7×10^{-4}	a	2.8×10^{-2}	6.9×10^{0}	1.2×10^{0}	2.9×10^{0}	7.2×10^{-1}
5	a	8.3×10^{-4}	5.7×10^{-4}	1.7×10^{-4}	9.4×10^{-5}	2.5×10^{-5}	2.0×10^{-8}	1.7×10^{0}	1.1×10^{0}	3.3×10^{-1}	1.8×10^{-1}	4.8×10^{-2}
9	4.3×10^{-8}	8.7×10^{-4}	1.9×10^{-4}	5.9×10^{-5}	3.0×10^{-5}	7.8×10^{-6}	8.4×10^{-5}	1.7×10^{0}	3.8×10^{-1}	1.2×10^{-1}	5.8×10^{-2}	1.5×10^{-2}
12	3.5×10^{-7}	7.6×10^{-4}	1.3×10^{-4}	3.9×10^{-5}	1.9×10^{-5}	5.0×10^{-6}	6.9×10^{-4}	1.5×10^{0}	2.5×10^{-1}	7.5×10^{-2}	3.7×10^{-2}	9.8×10^{-3}
	Lifetime Lung Dose (rem)											
1/2							a	1.2×10^{-7}	1.1×10^{-3}	3.3×10^{-5}	4.1×10^{-3}	8.8×10^{-4}
1							a	1.7×10^{-5}	4.4×10^{-3}	7.4×10^{-4}	1.9×10^{-3}	4.7×10^{-4}
5							a	2.8×10^{-4}	7.4×10^{-4}	2.2×10^{-4}	1.2×10^{-4}	3.3×10^{-5}
9							5.3×10^{-8}	2.3×10^{-5}	2.6×10^{-4}	7.9×10^{-5}	4.0×10^{-5}	1.1×10^{-5}
12							4.3×10^{-7}	4.2×10^{-6}	1.7×10^{-4}	5.3×10^{-5}	2.6×10^{-5}	7.0×10^{-6}
	Lifetime Bone Dose (rem)											
1/2							a	2.2×10^{-6}	2.1×10^{-2}	8.3×10^{-4}	7.8×10^{-2}	1.7×10^{-2}
1							a	3.3×10^{-4}	8.4×10^{-2}	1.4×10^{-2}	3.6×10^{-2}	9.0×10^{-3}
5							2.4×10^{-10}	5.4×10^{-3}	1.4×10^{-2}	4.2×10^{-3}	2.4×10^{-3}	6.3×10^{-4}
9							1.0×10^{-6}	4.4×10^{-4}	4.9×10^{-3}	1.5×10^{-3}	7.7×10^{-4}	2.0×10^{-4}
12							8.2×10^{-6}	8.1×10^{-5}	3.3×10^{-3}	1.0×10^{-3}	5.0×10^{-4}	1.3×10^{-4}
	Fallout Dose (rem)											
1/2							a	2.0×10^{-6}	5.9×10^{-2}	5.0×10^{-3}	1.7×10^{-1}	1.8×10^{-1}
1							a	2.3×10^{-4}	7.8×10^{-2}	6.4×10^{-2}	7.2×10^{-2}	8.8×10^{-2}
5							1.5×10^{-10}	2.0×10^{-2}	1.6×10^{-2}	2.6×10^{-2}	4.3×10^{-2}	6.2×10^{-3}
9							3.8×10^{-7}	1.8×10^{-2}	5.9×10^{-3}	8.8×10^{-3}	1.4×10^{-3}	1.9×10^{-3}
12							8.1×10^{-6}	1.6×10^{-2}	3.4×10^{-3}	5.1×10^{-3}	8.1×10^{-4}	1.1×10^{-3}

Direct Radiation (roentgen/h)

Peak dose rate at 1/2 mile is 4×10^{-4}

Fallout Dose - Washout (rem)

1/2	2.0×10^{-1}
1	7.3×10^{-2}
5	6.3×10^{-3}
9	2.3×10^{-3}
12	1.2×10^{-3}

	Meteorology	Wind Velocity
VS-2	Very stable	2 mph
MS-2	Moderately stable	2 mph
N-2	Neutral	2 mph
N-10	Neutral	10 mph
U-2	Unstable	2 mph
U-10	Unstable	10 mph

(1) Calculated using the meteorological diffusion methods described in Section XI-4.3.2h.

(2) The symbol "a" means less than 1×10^{-10}.

(3) First two-hour dose is zero since the time of cloud travel is greater than two hours.

Fumigation

The doses were also calculated for an assumed period of "fumigation", using the calculational methods on page 61 of AECU3066, Meteorology and Atomic Energy. Fifteen minutes is the average duration of this condition and was therefore used in the analysis. Assumption of a larger duration will give proportionally higher doses. For example use of a 30 minute duration gives about twice as large a dose. The dose was calculated at the site boundary for the period of maximum stack release rate.

‡ TABLE XI-18

DOSE DURING 15 MINUTES OF "FUMIGATION" FOR 100% CORE MELT(1)

Passing Cloud (rem)	Lifetime Thyroid (rem)
9.1×10^{-2}	1.8×10^{-1}

Exfiltration

If the wind were strong enough to cause the pressure at the downwind side of the reactor building to be more negative than the reactor building interior (standby gas treatment system operating), airborne fission products in the reactor building could leak out in the building wake (exfiltration).

An analysis of potential exfiltrations from the reactor building is described in Section V-4. The analysis is based upon a model developed from wind tunnel and actual field experiments. The model was developed for a rectangular building, such as the reactor building, and is based upon a uniform leakage through all walls, varying as a function of ΔP. The pressure profiles from the tests indicate that the maximum external negative pressures occur near the center of the wall surfaces, with smaller negative pressures near the edges of the building. The most probable locations for leakage are the roof-to-the-wall joints, wall-to-wall joints, and doors. These locations are near the edges of the wall surfaces and the negative pressures at these locations are below the wall average, so that exfiltration from the reactor building should be less than that calculated by the model.

From Section V-4, exfiltration will not occur below a wind speed of 35 to 65 miles/hr. From Exhibit III-6-40 of the Unit 2 Plant Design and Analysis Report, not once during 44,000 hours of observation was the wind speed at the Dresden site recorded to be above 39 miles/hour at 15 feet above the ground. Only 10 times during 44,000 hours of observation was the wind speed reported to be above 39 miles/hour at 150 feet above the ground. Therefore, it is very improbable that a high wind speed could occur coincident with the accident. If such a wind speed did occur, it would be in gusts and of very short duration.

Nevertheless, if it is assumed that a 40 mile/hour wind occurs for 10 minutes during the period of maximum airborne fission product activity in the reactor building, the maximum whole body dose (using the maximum leakage rate of 0.16/day at 40 miles/hr) would be 0.5 mr at the nearest site boundary and the maximum integrated thyroid dose would be 80 mr.

An evaluation of the exfiltration rates greatly in excess of the calculation has been performed. This evaluation shows that with a 35-mile per hour wind (the minimum wind speed at which exfiltration would occur) the exfiltration rate could be increased to infinity and the doses at the site boundary would not reach

(1) Calculated for 2 miles/hr wind velocity using the methods of Section XI-4.3.2 to Section XI-4.3.2f.

300 rems in 2 hours. This calculation was for the maximum reactor building airborne halogen radioactivity following the postulated 100 percent core melt and includes continued leakage from the primary containment during the exfiltration of the reactor building. With a wind speed above 10 to 12 miles per hour (far below the wind speed at which any exfiltration will occur), even if all the reactor building airborne radioactivity were released in 2 hours, the maximum thyroid doses at the site boundary would not exceed 300 rems. Figure 61 shows the exfiltration rates which will give 300 rem to the thyroid at the site boundary as a function of wind speed with no wind direction diversity. The figure also shows the expected actual exfiltration rate. The calculations indicate that a substantial margin exists between the expected exfiltration rates and those which could result in excessive doses.

Leakage From Liquid Systems

The containment and core spray systems are tight systems and are designed to have little liquid leakage. The pumps are operated only for tests (so the seals should be tight) the internal pressure is relatively low and the coolant temperature is low, so the leakage rate will be quite low. Nevertheless, assuming a maximum average leakage rate of 1 gallon per hour (a conservative maximum based on pump operating experience) for each of the 10 pumps operating, the leakage of water from the containment would be 10 gallons per hour. All this equipment is located in the pressure suppression chamber room below ground level, with sumps drained to the radioactive waste disposal system, and the only openings to the rest of the reactor building are two stairwells. The water leaked to this chamber would be pumped to the waste disposal system with little holdup in the suppression chamber room. The only halogens present in the containment cooling water are in solution and would largely remain in solution in the cool water. The pressure suppression chamber room, below ground with low inleakage, would have a very low air exchange rate, so that, with the large halogen partition factor, only a small fraction of the halogens in solution would become airborne.

Nevertheless, conservatively assuming that 10 percent of the halogens contained in the leaked water become airborne and are drawn off by the reactor building standby gas treatment system, the release of halogens from this source would be 50 times less than the leakage of airborne halogens from the primary containment air space (0.5 percent per day leakage rate). Therefore, the halogens leaving the primary containment in leaked water are negligible compared to the airborne halogens leaking from the primary containment.

4.0 SUMMARY OF ANALYTICAL METHODS

4.1 Pressure Suppression & Containment System Pressures

(Conforming amendment of Unit 2 PDAR required where indicated by‡)

The pressure suppression system design is based on Moss Landing and Bodega Bay test results. The principal geometric parameters have been designed to closely approximate the full scale 1/112 segment Bodega Bay test [1]. Care has been exercised to duplicate all test configurations which influence the peak transient pressures as closely as possible.

Table XI-19 compares the important parameters of Bodega Test #17 with those of the Unit 3 design.

TABLE XI-19

PRESSURE SUPPRESSION SYSTEM

PARAMETER COMPARISON

	Geometric Parameter	Moss Landing Test #17	Unit 3
	Break Area/Total Vent Area	0.0194	0.019
‡	Drywell Volume/Pressure Suppression Chamber Air Volume	1.64	1.32
‡	Primary System Volume/Pressure Suppression Pool Volume	0.238	0.197
	Initial Primary System Pressure psig	1250	1000
	Downcomer-Vent Pressure Loss Factor	6.21	6.21
	Downcomer Submergence - feet	4	4
‡	Drywell Volume/Reactor Volume	13.7	7.6

The drywell to pressure suppression chamber air volume ratio does not affect the peak pressure strongly. It affects primarily the final pressure after blowdown. The lower ratio for Unit 3 results in a lower pressure after blowdown because less drywell air is available to pressurize the pressure suppression chamber air space.

The drywell maximum pressure is strongly sensitive to the primary system initial pressure which influences the blowdown rate in almost direct proportion. The lower value for Unit 3 would result in a much less severe pressure peak in the drywell.

(1) Bodega Bay Preliminary Hazards Summary Report, Appendix I, Docket 50-205, December 28, 1962.

‡ The lower primary system volume to pressure suppression pool volume ratio for Unit 3 affects primarily the pool temperature rise and has no effect on the peak transient pressures. The pressure ‡ suppression chamber final pressure is affected only slightly due to the somewhat lower partial pressure of the water vapor.

The drywell volume to reactor volume ratio has a slight effect on the peak drywell pressure. The ‡ Unit 3 ratio of 7.6 lies between that for Bodega Test #17 with a ratio of 13.7 and a measured pressure of 37 psig and several correlated Humboldt Bay tests with a ratio of 4.62 and pressure of 43 psig. Hence this would add about 2 psi.

The differences in the key parameters are either in a conservative direction or result in second order effects on the peak pressure leading to the conclusion that the Unit 3 design will result in significantly lower pressure peaks than those measured.

An analytical blowdown model has been developed which, when incorporated in a digital code which includes the critical drywell and pressure suppression chamber parameters discussed above, gives excellent comparison with the test results. These are shown in Table XI-20 along with the calculated values for Unit 3. A description of the blowdown model itself is presented in a recent ASME paper (1). The code results are conservative relative to the tests and this same conservatism is inherent in the calculated results for the Units 2 and 3.

TABLE XI-20

PRESSURE SUPPRESSION SYSTEM BLOWDOWN MAXIMUM PRESSURE COMPARISON

	Unit 3		Bodega Test #17	
Max. Pressure, psig	Design	Calculated	Measured	Calculated
‡ Drywell	62	39	37	42
Pressure suppression chamber	62	21	28	29

The break area assumed for the purpose of calculating the containment peak transient pressure and establishing the break-vent area ratio was 5.5 ft^2. This is equivalent to the area of the jet pump injection nozzles, the equalizing line area and the recirculation suction line area. In calculating the peak pressures no credit has been taken for pipe friction, the pump, flow nozzle, and resistances in the equalizing line which will significantly reduce the flow. The equalizing line is valved closed at full power and the equivalent area would only be 4.4 square feet and the resulting peak pressure would be under 31 psig.

4.2 Steam Line Flow Limiter (Same as Unit 2 PDAR as amended)

The method used to predict steam/water critical flow is well established and has experimental verification. An analytical model (2) which shows reasonable agreement with various experiments has been developed. This model was used to give the maximum flow at the nozzle as a function of the stagnation (vessel) pressure and enthalpy of the escaping fluid.

(1) F. J. Moody, "Maximum Flow Rate of a Single Component, Two Phase Mixture", ASME 64-HT-35.

(2) F. J. Moody, "Maximum Flow of a Single Component, Two Phase Mixture", APED 4378, October 1963.

4.3 The Analytical Method for Calculating Doses

(Conforming amendment of Unit 2 PDAR required where indicated by ‡)

Introduction

The analytical techniques used to calculate radiological effects from each of the major accidents are described.

The sources of radiation considered in these various accident analyses are (a) the noble gases and their external whole body dose effect (b) the halogens and the resulting thyroid dose from inhalation, (c) volatile solids (cesium and tellurium) resulting in lung dose from inhalation and (d) bone dose from inhalation of the non-volatile solids.

Various meteorological conditions have been examined to give a spectrum of radiological effects during the poor diffusion conditions of inversion and the better diffusion conditions of lapse or unstable. Six points in the meteorological spectrum are examined, these are (a) very stable and moderately stable each at a wind speed of 2 mph (b) neutral conditions at wind speeds of 2 and 10 mph and (c) unstable conditions at wind speeds of 2 and 10 mph.

Wind direction persistence and variability of direction were considered in radiological effects analysis. Persistence of direction was assumed for 15 hours duration. Various values of the diffusion parameter ($\sigma_\theta \bar{u}$), the product of standard deviation of wind direction fluctuation and average wind speed, were assumed to exist for the entire 15 hour period of persistent direction. This information was used in a recently reported diffusion calculational technique. A comparison between this type of diffusion calculation and a more common analysis method, where wind direction variability is not considered, was also made.

4.3.1 General

Radiological effects of the control rod drop, fuel loading and loss of coolant accidents are evaluated at distances of one-half, one, five, nine and twelve miles from the plant. The first distance is the site boundary, the last being the distance to the nearest "population center". Intermediate distances are given to illustrate the decrease with distance of the various radiological effects.

‡ Since airborne materials are released via the 310 foot stack, the effects at distances less than one-half mile for any diffusion condition are far less for all modes of exposure except that from the passing cloud. At such short distances, the plume has not yet reached ground level so that exposure from inhalation and from deposition is very small. The passing cloud effect, however, remains nearly constant due to essentially line-source geometry of the plume overhead.

Two special cases of radiological effects are also shown for the fuel loading and loss of coolant accidents. One is the effect of direct radiation from the airborne fission products contained in the reactor building. The effect in this case is shown at the plant site boundary, and involves no meteorological considerations. The steam line break in the turbine building is the second special case evaluated. The steam escaping the turbine building would initially rise at a rapid rate due to buoyancy. Even as the steam cloud mixed with the surrounding air, it would remain less dense than the normal atmosphere. Measurements of the altitudes to which smoke will rise when released at ground level have been made at Brookhaven National Laboratory [1]. The equation developed in the experiments indicates that the steam

(1) Singer, I.A., J.A. Frizzola and M.E. Smith, "The Prediction of the Rise of a Hot Cloud From Field Experiments," Journal of the Air Pollution Control Association, November 1964.

‡ would rise to a centerline height of 4700 feet with a 1 mile per hour wind, to 470 feet with a 10 mile per
‡ hour wind and to 95 feet with a 50 mile per hour wind. Because of the large change in maximum dose with change in height of release, a 50 mile per hour wind results in the maximum ground level doses for the accident and is assumed for the analysis. The release is thus assumed to be from a point source located
‡ 95 feet above the turbine building, in a 50 mile per hour wind. The diffusion calculations are performed for unstable meteorological conditions, using the analytical techniques described in this section. The doses are also calculated by the methods described in this section.

With the reactor building isolation ventilation system designed to provide a negative pressure of 0.25 inch of water in the reactor building, a wind of around 40 mph is necessary in order to get exfiltration. Winds of this speed are very infrequent, do not last long and cause most people to seek shelter, which provides shielding.

4.3.2 Meterological Diffusion Evaluation Methods

‡ The radiological effects of secondary containment leakage via the 310 foot stack are evaluated at six points in the atmospheric diffusion spectrum, which encompass the conditions encountered at the reactor site. These are poor diffusion conditions caused by inversion (stable), at a wind speed of about two miles per hour, typical of warm weather nights, for both very stable and moderately stable conditions, and the better diffusion conditions, typical of daytime, represented by neutral and unstable (lapse) diffusion both at wind speeds of two and ten miles per hour.

a. Height of Release

‡ Leakage from the secondary containment via a 310 foot stack takes optimum advantage of the large atmospheric dispersion. The effective height of release is the sum of the stack height plus any effluent
‡ rise due to momentum and buoyancy. Momentum and buoyancy are small so that the effective height of
‡ release is taken as the stack height.

b. Diffusion Conditions

The atmospheric diffusion methods developed at the Hanford Laboratories part of the AEC research and development program and reported in the Journal of Applied Meteorology[1] were used. In using these diffusion methods, an important parameter to be chosen is the product of wind speed and wind direction variability over the period of interest, given as $\sigma_\theta \bar{u}$. Here σ_θ is the standard deviation of the horizontal wind direction fluctuations and $\bar{u}$ is the average wind velocity. Combined with the stability condition assumed, specification of $\sigma_\theta \bar{u}$ permits calculation of air concentrations at various distances from the source.

The extensive experimental work at Hanford on which the model is based and the meteorological instrumentation used are explained in a Geophysical Research Paper.[2] A 400 foot meteorological tower with seven aerovanes located at seven different levels was situated near the point of release during these diffusion experiments. These instruments provided information on wind speed, wind direction and wind variability (sigma theta) for the point of release of the experimental tracer. A summary of the data taken is shown in reference (1). It can be seen in this summary that data including σ_θ were taken during low wind speed conditions. In fact, wind speed as low as 0.7 meter/sec (1.6 miles per hour) are reported. Several experiments were conducted during wind speeds ranging from 0.7-1.6 meters/sec (1.6-3.6 mph). Diffusion observed during these and other meteorological conditions was the basis for development of the diffusion model described.

(1) Prediction of Environmental Exposure from Sources Near the Ground, Based on Hanford Experimental Data, J.J. Fuquay, C.L. Simpson and W.T. Hinds, Journal of Applied Meteorology, Volume 3 No. 6, December 1964.
(2) "The Green Glow Diffusion Program, Volumes I and II," Geophysical Research Papers No. 73, April 1962, AFCRL-62-251 (I and II).

The standard deviation of the wind direction from its mean direction is represented by σ_θ. Statistically this can be calculated from short duration averages from the normal root mean square relationship. However, comparison of the standard deviation calculated by the root mean square method to simply taking the range of direction and dividing by a single number has been found to be satisfactory by some workers. The number used to divide the range by to obtain σ_θ lies somewhere between about 4 and 6. The significance of this number is that, for example, using a value of 4 means the trace is such that 95% (±2 standard deviations of normally distributed data population) is included in the range reported. In the Dresden data analysis a value of 6 was used. This in effect said the trace was such that 99.7% (±3 standard deviations) was included within the range reported. In addition use of a value of 6 gives a conservative estimate of the standard deviation.

The values of σ_θ used in the dose calculation reported herein were determined from Dresden meteorological data. A Bendix-Freiz Aerovane was originally selected for installation at Dresden in 1958. It was comparable to the instrumentation in use at Hanford for a number of years. Thus, the Dresden meteorological data were recorded on an aerovane recorder attached to a Bendix-Freiz aerovane instrument. Extraction of σ_θ from this data at any and all wind speeds is considered proper for use in a diffusion model which had been developed using the same sort of instrumentation.

Wind charts were examined on an hourly basis. All data extracted therefore apply to a time period of one hour. That is, average wind direction is average for an hour, etc. The wind diversity was recorded as a wind direction range for each hour. Range in this case refers to the total angular direction variation within a one hour period. The range was determined from looking at the wind trace and subtracting the left-most wind direction from the right-most direction, considering any scale shift on the chart or noting where the trace traversed the 0° (also 360°) direction.

In each case the extreme left or right direction of the chart trace was required to have a real thickness. That is, fluctuations in direction which were rapid (high frequency) such that the ink trace on the chart was either noncontinuous, illegible or not at least more than the width of the recording pen trace were not counted.

A summary of 1963-1964 data (Section 7, Volume III, Unit 2 Plant Design and Analysis Report) taken at the Dresden site shows that about 1% of the time the hourly value of $\sigma_\theta \bar{u}$ is equal to 20 degree-mph (or 0.16 radian-meters/sec) or less. This is considered a reasonably pessimistic value of this parameter, and was used to describe the horizontal spreading of the plume for the 2 mph wind speed cases.

A value of 130 degree-mph (or 1.0 radian-meters/sec) for $\sigma_\theta \bar{u}$ was chosen to evaluate the effects during 10 mph conditions. This value of $\sigma_\theta \bar{u}$ is slightly less than average for all of the Dresden data and would be an example of relatively favorable diffusion conditions.

c. Wind Direction Persistence

Inherent in the choice of the parameter $\sigma_\theta \bar{u}$, is the restriction that wind direction be unvarying within some specific direction increment (for example ± 22-1/2°, or 45°). Since the values of $\sigma_\theta \bar{u}$ chosen are for 1-hour periods of time, and since larger values of $\sigma_\theta \bar{u}$ would be applicable to longer periods, in general, a choice of persistent wind direction (number of continuous hours) must be made during which the $\sigma_\theta \bar{u}$ values chosen could be expected to apply.

Wind persistence studies at Argonne for the period 1949-1954 (see Section 6, Volume III, Unit 2 Plant Design and Analysis Report) give the frequency of unvarying wind direction for the site area. The data are for a 45° direction increment, i.e. persistent direction within plus or minus 22-1/2°. From the data, it can be seen that there is about a 95% chance that the wind will not blow in any single direction (45° sector) for a period greater than 15 hours. This is for all directions, all wind speeds, all stability conditions, etc. combined. If the value of $\sigma_\theta \bar{u}$ and the persistence of wind direction were totally independent, it would seem that a value of 20 degree-mph for a 15-hour period has a probability of occurrence of about 0.05% or one change in 2000. Such independence obviously does not exist since persistent winds indicate relatively unvarying conditions. However, the Argonne persistence data consist of 10 minute sampling per hour of a continuous wind direction recording. The average direction during this ten-minute period was computed and the persistence of this average direction, within a variation of 45°, was tabulated. It is quite apparent that a wide range in σ_θ or $\sigma_\theta \bar{u}$ could exist and still yield persistence tabulations such as the Argonne summary. Thus, it seems reasonable to conclude that although some degree of dependence may exist between persistent winds and the diffusing parameter $\sigma_\theta \bar{u}$, significant independence does occur. Therefore, it is estimated that a value of $\sigma_\theta \bar{u}$ of 20 degree-mph has a probability of between 0.1% and 0.5% for a 15-hour period. Therefore, assuming wind direction persistence for 15 hours and a value of $\sigma_\theta \bar{u}$ of 20 degree-mph and 2 mph wind speed for poor diffusion conditions is quite conservative.

For a 10 mph wind, a value of $\sigma_\theta \bar{u}$ of 130 degree-mph corresponds to σ_θ of 13 degrees which is quite similar to the value of 10 degrees for the 2 mph case. Thus, approximately, the same amount of wind variability is being considered and the 15-hour persistence assumption appears equally applicable.

d. Application to Radiological Effects Calculation

The diffusion and wind direction persistence conditions determine the method of application to a certain extent. Since 15 hours of wind persistence is considered, and since both the coolant loss accident and the fuel loading accident postulate leakage for much longer periods, the 15 hour time increment where the maximum integrated leakage occurs in each case is the period of interest in determining total accident effects (doses). In the case of the 2 hour dose, the first 2 hours of integrated leakage is used to calculate the dose assuming persistent wind during the entire period.

In the case of the control rod drop accident almost 100% of the total noble gases released are
‡ released within the first 15 hours (actually all in first 2 hours); approximately 100% of the total halogens
‡ released are also released in this first 15 hour period. About 90% and 45% of the total noble gases and halogens respectively are released during the first 15 hour period in the fuel loading accident. This is the maximum quantity of halogens released in any such 15 hour time increment for this accident. The 15
‡ hour period of maximum leakage in the coolant loss 100% fuel melt analysis occurs between 10 hours and
‡ 25 hours after onset of the accident. During this time, 12% of the noble gases, 11% of the halogens, and 45% of the solids are released.

Thus, the corresponding quantity of curies released in the maximum 15-hour period in each case is taken as the amount transported in one general direction and the dose therefrom is calculated.

The remaining fraction, in each case, is assumed to be spread around the site rather uniformly in different directions accompanied by the more frequently occurring highly variable wind patterns common to this location. It is recognized that a portion of this remaining leakage assumed to be widely spread may diffuse in the same direction as that during which the 15 hour persistent wind occurred. However, reduced leakage, increased horizontal spreading and vertical spreading due to stability changes and greater direction variability during the remainder of the leakage period all combine to make any such added incremental transport of material (and dose) small compared to the doses calculated by the methods described.

e. Cloud Dispersion Calculations

The above diffusion methods were used in calculating cloud dispersion. In these methods, horizontal cloud growth, as expressed by the standard deviation of width σ_y is given by

(1) $\sigma_y^2 = At - A\alpha + A\alpha e^{-t/\alpha}$

where

(2) $A = 13 + 232.5\ (\sigma_\theta \bar{u})$

(3) and $\alpha = \dfrac{A}{2\ (\sigma_\theta \bar{u})^2}$

t = time after release and is $\dfrac{x}{\bar{u}}$, where x is downwind distance.

Vertical cloud growth, as defined by the standard deviation of width σ_z is given by

(4) $\sigma_z^2 = a\ [1 - e^{-k^2 t^2}] + bt$ * stable case (1)

(5) $\sigma_z^2 = \dfrac{C_z^2\ X^{2-n}}{2}$ * neutral and unstable case (2)

The values of the constants in Equations (4) and (5) used in each case are given below:

			Diffusion Constants Used (2)			
Stability	Wind Speed (mph)	a (m^2)	b (m^2/sec)	K^2 (sec^{-2})	C_z ($m^{n/2}$)	n
Very stable	2	34	0.025	8.8×10^{-4}	-	-
Moderately stable	2	97	0.33	2.5×10^{-4}	-	-
‡ Neutral	2	-	-	-	0.15	0.25
‡ Neutral	10	-	-	-	0.12	0.25
‡ Unstable	2	-	-	-	0.30	0.20
‡ Unstable	10	-	-	-	0.26	0.20

(1) Prediction of Environmental Exposures From Sources Near The Ground, Based on Hanford Experimental Data, J.J.Fuquay, C.L.Simpson and W.T.Hinds, Journal of Applied Meteorology, Volume 3 No. 6, December 1964

(2) Environmental Radioactive Contamination As A Factor In Nuclear Plant Siting Criteria, E.C.Watson, C.C.Gamertsfelder, February 14, 1963 - HW-SA-2809.

The calculated values for σ_y and σ_z were used in the gaussian equation to calculate concentrations in air at various downwind distances

$$(6) \quad X/Q_o = \frac{Q/Q_o}{2\pi\sigma_y\sigma_z\,\bar{u}}\, e^{-\frac{1}{2}\left(\frac{y^2}{\sigma_y^2} + \frac{z^2}{\sigma_z^2}\right)}$$

where X/Q_o = integrated air concentration (X) per unit activity release (Q_o)

y = distance from centerline crosswind (since plume centerline used, y=o)

z = height of plume above ground

Q/Q_o = correction for depletion (halogens and particulates only [1]).

The conventional "reflection" factor of 2 usually applied for releases from ground-level is not included in the elevated analysis performed here. For the passing cloud dose, which is primarily a gamma dose, the entire cloud volume is integrated as an "infinite" number of point sources to plus and minus ∞ in the z-direction ignoring interception by the ground, so the entire cloud volume is included. Inhalation doses are a function of concentration at the ground and subject to "reflection effects" if they exist. Since the materials of interest in inhalation also are deposited on the ground, it is doubtful that "perfect" reflection can occur, but rather that the cloud as it intercepts the ground will expand distorting the gaussion mass ‡ distribution within it resulting in at most a small increase in concentration. Additionally, the diffusion ‡ coefficients used in this analysis are for elevated releases and do not take account of the better lateral ‡ diffusion at ground level which is effective on that portion of the cloud which reaches the ground. The ‡ magnitude of this increased diffusion can be seen from Table 8-2, page 105 of Meteorology and Atomic ‡ Energy, AECU 3066, where a factor of 2 is indicated between ground level and 200 meter elevation values ‡ of the diffusion coefficients. Thus, "reflection" effects if they exist are considered accounted for in the method.

No distinction in the choice of the diffusion parameter $\sigma_\theta \bar{u}$ is made between the first 2-hour period for which doses are calculated, compared to the period of interest for total accident dose calculations. This is inconsistent because larger values of this parameter are quite obviously appropriate for the longer time period. That is, the values used, as discussed in Section XI-4.3.2b, are for 1-hour periods, and thus are somewhat conservative when applied to the 2-hour period dose calculation and are markedly conservative for the total accident (15-hour) calculation. Lack of data at this time for the longer time period does not permit more precise estimates to be made.

f. Precipitation Washout

Cloud depletion as a result of precipitation washout could cause ground deposition of an otherwise elevated cloud. The dose from this type of fallout on the ground was calculated for each accident. Washout rates[1] commonly used give the same results as from the dry deposition rates[2] used in Section XI-4.3.2b for a ground release in the stable case. Thus, the calculation of deposited concentrations was made using the same diffusion conditions as in the other dose calculations, but using a ground release.

(1) Environmental Radioactive Contamination As A Factor In Nuclear Plant Siting Criteria, E.C.Watson, C. C. Gamertsfelder, February 14, 1963, HW-SA-2809.

(2) Theoretical Possibilities and Consequences Of Major Accidents In U 233 and PU 239 Fuel Fabrication and Radioisotope Processing Plants, ORNL 3441, April 1964

No

This does not mean that a ground release is being assumed, as plant design assures an elevated release, but merely that the procedure was used as a calculational tool.

g. Calculated Air Concentrations

The methods described in the previous sections were used to calculate integrated air concentrations (μc/cc) from a unit release of 1 curie/sec. The following table shows the values calculated for the six different meteorological conditions assumed and for the effective stack heights calculated.

‡ TABLE XI-21

UNIT INTEGRATED AIR CONCENTRATION
(μc/cc per curie/sec released)

Distance Miles		VS-2(2)	MS-2	N-2	N-10	U-2	U-10
1/2	Noble Gases	(1)	1.1×10^{-10}	1.4×10^{-6}	2.6×10^{-8}	1.3×10^{-5}	1.3×10^{-6}
	Particulates	(1)	1.1×10^{-10}	1.4×10^{-6}	2.6×10^{-8}	1.3×10^{-5}	1.3×10^{-6}
	Halogens	(1)	1.1×10^{-10}	1.4×10^{-6}	2.6×10^{-8}	1.2×10^{-5}	1.3×10^{-6}
1	Noble Gases	(1)	1.5×10^{-8}	5.6×10^{-6}	4.7×10^{-7}	5.8×10^{-6}	7.8×10^{-7}
	Particulates	(1)	1.5×10^{-8}	5.6×10^{-6}	4.7×10^{-7}	5.8×10^{-6}	7.8×10^{-7}
	Halogens	(1)	1.5×10^{-8}	5.6×10^{-6}	4.7×10^{-7}	5.6×10^{-6}	7.5×10^{-7}
5	Noble Gases	1.2×10^{-14}	1.0×10^{-6}	1.1×10^{-6}	2.2×10^{-7}	4.8×10^{-7}	8.7×10^{-8}
	Particulates	1.2×10^{-14}	1.0×10^{-6}	1.1×10^{-6}	2.2×10^{-7}	4.8×10^{-7}	8.6×10^{-8}
	Halogens	1.2×10^{-14}	1.0×10^{-6}	1.1×10^{-6}	2.0×10^{-7}	4.4×10^{-7}	7.9×10^{-8}
9	Noble Gases	5.6×10^{-11}	1.1×10^{-6}	4.7×10^{-7}	9.6×10^{-8}	1.9×10^{-7}	3.6×10^{-8}
	Particulates	5.6×10^{-11}	1.1×10^{-6}	4.7×10^{-7}	9.5×10^{-8}	1.9×10^{-7}	3.5×10^{-8}
	Halogens	5.6×10^{-11}	1.1×10^{-6}	4.3×10^{-7}	8.7×10^{-8}	1.7×10^{-7}	3.2×10^{-8}
12	Noble Gases	4.8×10^{-10}	1.2×10^{-6}	3.4×10^{-7}	7.0×10^{-8}	1.3×10^{-7}	2.6×10^{-8}
	Particulates	4.8×10^{-10}	4.8×10^{-9}	3.4×10^{-7}	6.9×10^{-8}	1.3×10^{-7}	2.5×10^{-8}
	Halogens	4.8×10^{-10}	1.0×10^{-6}	3.1×10^{-7}	6.2×10^{-8}	1.2×10^{-8}	2.2×10^{-8}

(1) Less than 1×10^{-20}

(2) Symbols refer to stability and wind speed conditions, i.e. V S, M S, N, and U means very stable, moderately stable, neutral and unstable, respectively; 2 and 10 means 2 miles per hour and 10 miles per hour, respectively. The diffusion parameter $\sigma_\theta \bar{u}$ assumed is 20 degree-mph (0.16 rad-m/sec) for the 2 mph cases and 130 degree-mph (1.0 rad-m/sec) for the 10 mph cases.

TABLE XI-22

UNIT INTEGRATED AIR CONCENTRATION - GROUND SOURCE**

Moderately Stable 2 mph $\sigma_\theta \bar{u}$ 20 degree-mph

Distance, miles	μc/cc per curie/sec Released Halogens	Particulates
1/2	1.9×10^{-4}	2.2×10^{-4}
1	7.0×10^{-5}	8.9×10^{-5}
5	6.5×10^{-6}	1.2×10^{-5}
9	2.6×10^{-6}	6.8×10^{-6}
12	1.6×10^{-6}	4.5×10^{-6}

**Used to calculate fallout doses from precipitation washout case.

h. Comparison to Other Calculational Methods

As a point of comparison, the technique of calculating cloud growth (or spreading), in terms of its standard deviation of width (i.e. σ_y and σ_z) described in HW-SA-2809[1] were also used. This technique does not consider wind direction variability and uses diffusion parameters for calculating cloud spreading derived from experimental work involving short term (10 minute) release and sampling times. Presumably this technique is more appropriate for near instantaneous or puff releases rather than the longer time periods of interest in the hypothetical accidents described. Values of σ_y and σ_2 calculated by this technique were used in the gaussian equation for air concentration determination. The integrated air concentrations per unit amount released (μc/cc per curie/sec released) calculated by this technique are shown in the table below. It should be noted that unit air concentrations calculated by this technique give values which are quite similar to those calculated by the previous method described in Section XI-4.3.2 through XI-4.3.2f using the values of the various parameters described. However, in the text of this report, following each accident description, are tables of radiological effects using the two cloud dispersion calculational techniques discussed here. These tables show the difference in doses calculated using the two different methods.

(1) Environmental Radioactive Contamination As A Factor in Nuclear Plant Siting Criteria, E.C.Watson, C.C.Gamertsfelder, February 14, 1963 - HW-SA-2809.

‡

TABLE XI-23

UNIT INTEGRATED AIR CONCENTRATION

(μc/cc per curie/sec released)

(Using HW-SA-2809)

Distance Miles		VS-2 (2)	MS-2	N-2	N-10	U-2	U-10
1/2	Noble Gases	(1)	3.0×10^{-10}	2.9×10^{-6}	1.1×10^{-7}	1.1×10^{-5}	2.3×10^{-6}
	Particulates	(1)	3.0×10^{-10}	2.9×10^{-6}	1.1×10^{-7}	1.1×10^{-5}	2.3×10^{-6}
	Halogens	(1)	3.0×10^{-10}	2.9×10^{-6}	1.1×10^{-7}	1.1×10^{-5}	2.3×10^{-6}
1	Noble Gases	(1)	4.6×10^{-8}	1.2×10^{-5}	2.0×10^{-6}	5.0×10^{-6}	1.2×10^{-6}
	Particulates	(1)	4.6×10^{-8}	1.2×10^{-5}	2.0×10^{-6}	5.0×10^{-6}	1.2×10^{-6}
	Halogens	(1)	4.6×10^{-8}	1.2×10^{-5}	2.0×10^{-6}	4.8×10^{-6}	1.2×10^{-6}
5	Noble Gases	3.3×10^{-14}	2.9×10^{-6}	2.0×10^{-6}	5.9×10^{-7}	3.3×10^{-7}	8.8×10^{-8}
	Particulates	3.3×10^{-14}	2.9×10^{-6}	2.0×10^{-6}	5.9×10^{-7}	3.3×10^{-7}	8.7×10^{-8}
	Halogens	3.3×10^{-14}	2.9×10^{-6}	1.9×10^{-6}	5.6×10^{-7}	3.0×10^{-7}	8.0×10^{-8}
9	Noble Gases	1.4×10^{-10}	2.9×10^{-6}	6.8×10^{-7}	2.1×10^{-7}	1.1×10^{-7}	2.9×10^{-8}
	Particulates	1.4×10^{-10}	2.9×10^{-6}	6.8×10^{-7}	2.1×10^{-7}	1.1×10^{-7}	2.8×10^{-8}
	Halogens	1.4×10^{-10}	2.7×10^{-6}	6.3×10^{-7}	1.9×10^{-7}	9.6×10^{-8}	2.5×10^{-8}
12	Noble Gases	1.1×10^{-9}	2.7×10^{-6}	4.5×10^{-7}	1.4×10^{-7}	7.0×10^{-8}	1.9×10^{-8}
	Particulates	1.1×10^{-9}	2.6×10^{-6}	4.5×10^{-7}	1.4×10^{-7}	6.9×10^{-8}	1.8×10^{-8}
	Halogens	1.1×10^{-9}	2.5×10^{-6}	4.1×10^{-7}	1.3×10^{-7}	6.2×10^{-8}	1.6×10^{-8}

(1) Less than 1×10^{-20}

(2) Symbols refer to stability and wind speed conditions, i. e. VS, MS, N, U, means very stable, moderately stable, neutral and unstable, respectively; 2 and 10 means 2 miles per hour and 10 miles per hour, respectively.

TABLE XI-24

UNIT INTEGRATED AIR CONCENTRATION - GROUND SOURCE*

Moderately Stable 2 mph $\sigma_\theta \bar{u}$ 20 degree-mph

(By Methods In HW-SA-2809, See Section 2.8)

Distance, Miles	μc/cc per curie/sec released Halogens	Particulates
1/2	3.8×10^{-4}	4.5×10^{-4}
1	1.4×10^{-4}	1.9×10^{-4}
5	1.2×10^{-5}	2.2×10^{-5}
9	4.4×10^{-6}	1.0×10^{-5}
12	2.3×10^{-6}	6.3×10^{-6}

*Used to calculate fallout doses from precipitation washout case.

4.3.3 Radiological Effects Calculation Methods

The downwind effects, such as ground deposition and inhalation exposure, are a function principally of the integrated air concentration at any point. This integrated concentration decreases with distance due to turbulent diffusion in the atmosphere, and depletion of the contaminated cloud by deposition on the ground and on the ground cover. The magnitude of this effect is shown in the table in Section XI-4.3.2g.

a. External Radiation Dose From Passing Cloud

The air concentrations downwind were estimated using the methods described in Section XI-4.3.2 to XI-4.3.2f. The conversion from air concentration to integrated dose from the passing cloud is time dependent due to the radioactive decay of the equilibrium fission product mixture.

For the noble gases, halogens and volatile solids, the concentration required in an infinite cloud to produce a certain dose was evaluated for the radioactive decay periods of interest in the post-accident period. The air concentrations in an infinite cloud (μc/cc) which will produce a whole body dose rate of one mrad per hour with hemispherical geometry are:

TABLE XI-25

AIR CONCENTRATIONS (μc/cc)

Giving One mrad/hr-Whole Body Dose Rate

Decay Time (minutes)	Noble Gases	Halogens	Volatile Solids
10	1.2×10^{-6}	0.79×10^{-6}	1.7×10^{-6}
10^2	2.0×10^{-6}	0.79×10^{-6}	2.0×10^{-6}
10^3	3.4×10^{-6}	0.90×10^{-6}	2.5×10^{-6}
10^4	7.0×10^{-6}	1.90×10^{-6}	2.4×10^{-6}
10^5	4.5×10^{-6}	1.90×10^{-6}	2.2×10^{-6}

These air concentrations, equivalent to a dose rate of one mrad/hr, were used to evaluate external radiation at and beyond the point of maximum concentration at ground level following an elevated release because the cloud size approached an "infinite" cloud.

For distances closer than the point of maximum ground level concentrations, where the plume has not yet reached the ground, external radiation from the passing cloud was calculated assuming overhead line source geometry and applying appropriate shielding and buildup factors for air. The dose rate from an overhead plume during an emission of one curie per second of an equilibrium mixture of noble gases is as follows:

‡

TABLE XI-26

GAMMA DOSE RATE

(mrad/hr from 1 μc/sec equilibrium mixture of noble gases)

Distance (miles)	VS-2	MS-2	N-2	N-10	U-2	U-10
1/2	2.6×10^{0}	2.8×10^{0}	2.8×10^{0}	7.5×10^{-1}	2.8×10^{0}	5.8×10^{-1}
1	1.2×10^{0}	1.5×10^{0}	1.4×10^{0}	5.6×10^{-1}	1.4×10^{0}	3.8×10^{-1}
5	2.4×10^{-1}	2.7×10^{-1}	1.9×10^{-1}	4.0×10^{-2}	6.8×10^{-2}	1.7×10^{-2}
9	8.5×10^{-2}	1.0×10^{-1}	3.9×10^{-2}	1.2×10^{-2}	1.6×10^{-2}	4.6×10^{-3}
12	2.5×10^{-2}	3.2×10^{-2}	9.5×10^{-3}	6.5×10^{-3}	3.5×10^{-3}	2.1×10^{-3}

b. External Radiation Dose from Ground Deposition

The fallout concentrations of radioactive materials were determined on the bases of particle settling by eddy diffusion only, since settling by gravity is expected to be negligible in this case.

The extent of halogen and solid fission product deposition on the ground is a function of the apparent deposition velocity, which, in turn, is considered to be a function of the diffusion condition and wind speed. Deposition velocities used in this evaluation were based on British results cited in HW-SA-2809 and are:

Meteorology	Wind Velocity	Ratio of Deposition Velocity to Wind Velocity		Deposition Velocity cm/sec	
		Particles	Halogens	Particles	Halogens
Very stable	1 m/s (2 mph)	1.5×10^{-4}	2.4×10^{-3}	0.015	0.24
Moderately stable	1 m/s (2 mph)	2.2×10^{-4}	3.4×10^{-3}	0.022	0.34
Neutral	1 m/s (2 mph)	3.0×10^{-4}	4.6×10^{-3}	0.03	0.46
Neutral	5 m/s (10 mph)	3.0×10^{-4}	4.6×10^{-3}	0.15	2.3
Unstable	1 m/s (2 mph)	6.0×10^{-4}	8.0×10^{-3}	0.06	0.8
Unstable	5 m/s (10 mph)	6.0×10^{-4}	8.0×10^{-3}	0.3	4.0

The evaluation provides for correction due to radioactive decay after the material is deposited on the ground. As the amount of deposition is a function of air concentration, and as the air concentration is depleted by prior deposition at locations closer to the source, correction for this depletion has been made for deposition at the distances illustrated. In addition, the dose rate from the deposited material has been corrected for the finite size of the deposited source. This correction is a function of the standard deviation of cloud width and is:

‡

Finite Deposition Pattern Correction Factor

Distance (Miles)	VS-2	MS-2	N-2	N-10	U-2	U-10
1/2	0.82	0.82	0.84	0.81	0.92	0.91
1	0.88	0.88	0.91	0.90	--	--
5	0.95	0.95	--	--	--	--
9	--	--	--	--	--	--
12	--	--	--	--	--	--

The conversion from deposition on the ground to gamma radiation dose rate, at one meter above the ground, was made considering the gamma energies present from the halogen and solid fission products of which the deposited material is composed. The conversion is dependent on the age of the fission products present as follows:

Decay, days -	mr/hr at 1 meter above a curie/meter^2 surface
0.1	1.0×10^4
1.0	9.1×10^3
10.0	7.2×10^3
100.0	3.6×10^3

c. Exposure Due to Inhalation

Internal exposure to the thyroid gland from inhalation of the fission product mixture in the passing cloud is primarily due to iodine radioisotopes. This exposure was evaluated considering the dose from thyroid deposition of Iodine-131, 133, and 135. Other iodine radioisotopes of half lives of 2.3 hours or less were not included, considering their low rem per microcurie ratio for lifetime dosage, and because of the estimated three to six hour thyroid uptake time after the material is inhaled. The lifetime thyroid dose was evaluated for the three isotopes, considering a breathing rate of 230 cc/sec as given by ICRP, and a thyroid deposition of 23 percent of that which was inhaled which was soluble as given by ICRP.(1)

On page 16 of reference (1) it is stated that "the "standard" man breathes 2×10^7 cc per day. From this the breathing rate is 2×10^7 cc divided by 8.64×10^4 sec or 231 cc/sec average. ICRP also points out that for purposes of calculating permissible air concentrations of radioisotopes for workers a higher rate was used. It was assumed by ICRP that due to the greater activity during an 8-hour work period, half of the intake occurred during this period. Thus a rate of 347 cc/sec is used by ICRP for calculations pertinent to workers. Continuing with the ICRP assumption, if half the intake occurs during 8 hours of work, during the 16 hours of non-work the breathing rate must be 174 cc/sec. In the accident analysis, it was assumed that a hypothetical person is located at the site boundary for the first two hours or for the total accident at another location. This hypothetical person could be in a non-work status breathing at 174 cc/sec or in a work status breathing at 347 cc/sec. For analyis purposes it was considered that this hypothetical person was not in a work status, but could be breathing at more than the non-work rate consistent with the concept of possible evacuation. Consequently, it was assumed that the breathing rate was 230 cc/sec.

Dose to the lungs is primarily from the volatile solids and was evaluated considering that all volatile and other solid fission products inhaled were insoluble, and by use of conventional standard-man metabolic factors.

In the analysis of bone dose, the major contributors are the longer-lived radioisotopes of strontium, yttrium, zirconium, barium and ruthenium and their appropriate daughter products. All of these isotopes were considered soluble, and conventional standard-man metabolic factors were applied.

(1) Recommendations of the International Commission on Radiological Protection, ICRP Publication 2, Report of Committee II on Permissible Dose for Internal Radiation 1959.

4.4 Excursion Calculation Model

(Same and Unit 2 PDAR as amended)

Analysis of Doppler limited reactivity insertion accidents (excursions) are performed with a synthesis of spatial effects and the standard space-independent neutron kinetics equations. The basic calculational steps and important assumptions are discussed individually below. Specifically the key calculational steps are:

1. Reactivity input and feedback.
2. Space-time marching calculation.
3. Evaluation of damage.

4.4.1 Reactivity Input and Feedback

The reactivity initiating the postulated nuclear excursion is input to the standard point kinetics equation in the form of a reactivity versus time table or as a step insertion whichever is appropriate for the accident being analyzed

The excursions are assumed to be adiabatic with only the Doppler effect supplying prompt reactivity feedback to terminate the power burst. In particular, no negative feedback from prompt moderator heating is assumed. The magnitude of the reactivity effect due to Doppler broadening is conservatively taken to be about 5 percent less than that resulting from use of Pettus data[1] and 15 percent less than that using Hellstrand data.[2] The temperature dependence of the Doppler coefficient used in all the analyses is based on the square-root of temperature form. Experimental data for oxide fuel are fit more precisely by this form in both differential measurements[1], [2], [3] and gross core dynamic measurements.[4] Analysis discussed below, have shown the calculations to give excellent agreement on both the measured peak excursion power and total energy release.

The control rod scram system is assumed to be actuated when the power burst reaches 120% of rated reactor power and to start becoming effective after a 0.2 second delay.[5] In general, under this assumption the scram system does not limit the consequences of an accident but only serves to maintain the reactor subcritical after the power burst has been terminated by Doppler.

4.4.2 Space-Time Marching Calculation

To incorporate reactor spatial effects into the Doppler feedback to the kinetics calculation, a space-time kinetics analysis is synthesized by a marching calculation. Initial neutron flux distributions associated with accidental reactivity addition are first determined utilizing a three-group, steady state diffusion calculation. A core averaged Doppler spatial weighting factor is estimated from the flux distributions and utilized in the point kinetics equation to generate a small increment of power. In this case the kinetics calculation represents the average reactor condition.

This increment of power, expressed as a fuel temperature change, is then spatially distributed across the core according to initial flux distributions. New spatially distributed cross sections are computed, reflecting the Doppler effect due to the added temperature, and another diffusion calculation is made. Comparison of the eigenvalue change in this calculation to the eigenvalue change resulting from a uniformly distributed temperature increment provides an accurate estimate of the Doppler weighting factor appropriate for the next kinetics calculational step. Utilizing this procedure the calculation is marched through to the termination of the excursion.

1. BAW-1244, "Resonance Absorption in U-238 Metal and Oxide Rods," W. G. Pettus (1962).
2. NSandE 8, 497 (1960) E. Hellstrand, et al., "The Temperature Coefficient of the Resonance Integral for Uranium Metal and Oxide".
3. NSandE 19 172 (1964) A. H. Spano, "Analysis of Doppler-Limited Excursions in a Water-Moderated Oxide Core".
4. WCAP-1434 "Multi-Region Reactor Lattice Studies Microscopic Lattice Parameters in Single and Multi-Region Cores," June 1961.
5. See Appendix B.

Comparison in one space dimension of this procedure to a true space-time calculation [1] has shown excellent agreement for excursions of the type analyzed in this report.

4.4.3 Evaluation of Damage

Upon termination of the excursion calculation, quantities such as reactor period and total core energy released in the excursion are determined from the kinetics calculation. Utilizing the spatial calculation, peak power and a distribution of energy deposition in the fuel, expressed as calories/gm UO_2 versus pounds of fuel, are determined. From this information peak fuel enthalpies and quantities of fuel above certain damage levels are obtained.

4.5 Halogen Water to Steam Decontamination Factor (Same as Unit 2 PDAR as amended)

Data obtained at Dresden Unit 1, a typical BWR, for the transport of radioiodines, indicate that a decontamination factor, DF, of 3×10^4 is obtained between the reactor moderator water and condensate and that an additional decontamination factor of 2×10^2 exists between the condensate and off-gas.

4.5.1 Brief Description of Dresden 1

The net generating capacity of Dresden Nuclear Power Station Unit 1 is 210,000 KW. The dual cycle boiling water reactor steam generating system produces steam at two pressures for the double admission turbine. Primary steam is generated in the reactor vessel as the recirculating water coolant passes through the fuel assemblies in the core from the bottom entrance to the steam dome turning vane above. The steam-water mixture passes through the risers to enter the primary drum where the mixture is separated. The steam leaves the drum at 990 psia and enters the turbine pressure regulating control valves at 965 psia (rated load). These valves automatically adjust the flow to maintain the pressure constant at the primary drum.

The recirculating water, approximately seventeen times the quantity of the primary steam at rated load, flows from the primary drum through the downcomers to the suction of the four reactor recirculating pumps to be pumped through the associated secondary steam generators where a portion of its heat is removed to produce secondary steam. The recirculating water continues on to return to the bottom of the reactor. The secondary steam enters the secondary load control valves at the turbine. The pressure of this steam is inverse to the turbine load. It approaches primary drum pressure at zero load and decreases to a design pressure of 475 psia at full load.

The primary and secondary steam from the turbine passes to the main steam condenser where it is condensed and deaerated and returned to the reactor via the primary and secondary condensate feed pumps. Gases are removed from the condenser through a slotted 16-inch pipe extending the full length of the condenser and located at the top of each of the two tube banks above the air cooling sections. The two 16-inch pipes join in a 20-inch pipe leading to the two steam air ejectors and mechanical vacuum pumps.

The two steam air ejectors, with separate inter- and after-condensers, remove the non-condensable gases from the condenser during operation and discharge the gases into a 118-foot-long, 30-inch pipe. The size of the pipe normally provides a 20-minute holdup to allow decay of the radioactive gasses carried with the steam from the reactor to the condenser. The off-gas then passes through three absolute particulate filters located at the end of the off-gas holdup pipe and is discharged to the 300 foot stack.

---

1. WAPD-TM-4, "WIGLE - A Program for the Solution of the Two-Group Space-Time Diffusion Equations in Slab Geometry", W. R. Cadwell, et al., January 1964.

4.5.2 Environmental Measurements and Observations

Carryover of Non-Volatile Species in Primary Steam System

The measurement of steam decontamination factors for two typical non-volatile radionuclides, Na-24 and Cu-64, were determined during plant operations in 1960. The steam decontamination factors were obtained by comparing the concentration of Na-24 and Cu-64 activities in filtered reactor water with the concentrations observed in the primary steam. The results are listed in Table XI-27.

TABLE XI-27

PRIMARY STEAM DECONTAMINATION FACTORS

Reactor Power MWt	Primary Steam Flow lbs/h	Decontamination Factor* Na-24	Decontamination Factor* Cu-64
300	1.15×10^6	$>7.7 \times 10^3$	-
630	1.4×10^6	$>1 \times 10^4$	1.3×10^5

*Decontamination Factor is defined as the concentration in the reactor water divided by the concentration in the unfiltered steam.

The practical limits of this type of measurement are dependent on the initial concentration of the active species in the reactor water.

Na-24 and Cu-64 were the only non-volatile species that meet this requirement. If one considers these two elements representative of all non-volatile species the steam decontamination factor ranges between 1×10^4 and 1.3×10^5 at full power. The value for Cu-64 may be more reliable than the value based on the Na-24 because of the higher activity levels found in the reactor water and the relative radiochemical separation procedures. However, copper activity could be plating out in the sample lines, etc. Thus, to be conservative, the Na-24 decontamination factor of 1×10^4 will be used as a basis of comparison with results from the iodine carryover tests.

Carryover of Radioactive Iodines in Primary Steam System

Although no specific program was established for investigating the iodine decontamination factor between the reactor water and condensate, several independent measurements have been made which indicate the magnitude of this parameter. The results of these measurements are summarized in Table XI-28, together with approximate plant operating conditions. Some of the earlier DF data are greater due to the extremely low iodine concentrations in the steam or hotwell. As shown in Table XI-28, the decontamination factor for iodine between the reactor water and condensate is approximately 3×10^4 compared to a value of 1×10^4 for a "typical" non-volatile species, Na-24. The higher iodine DF is not considered significant since the sodium data is a single measurement. Thus, iodine behaves in a manner similar to sodium, a non-volatile species, with respect to carryover in the steam from the reactor water.

TABLE XI-28

IODINE DECONTAMINATION FACTORS BETWEEN

REACTOR WATER AND CONDENSATE

	July 1961	5-22-63	1-13-64	3-3-65
Power (MWt)	620	620	530	375
Off-Gas (μc/sec)	3×10^2	2×10^3	4×10^3	6×10^4
Approximate number of fuel defects	2	5	6	15 Identified 28 Suspect
Type of fuel cladding	Zr	Zr + SS	Zr + SS	Zr + SS
Average Burnup (MWDt)		5,000	8,300	9,000
Conductivity, μmho				
Reactor Water	0.4	0.4	0.4	0.4
Condensate	0.3	0.3	0.3	0.3
pH				
Reactor Water	7	7	7	7
Condensate	7	7	7	7
Sampling Method				
Reactor Water	Grab	Grab	Grab	Grab
Condensate	Grab	In-line	Grab	Grab
Analysis Method*				
Reactor Water	1	1	1	1
Condensate	1	3	2	1
μc/ml I-131				
Reactor Water	Isotopic Values	1.2×10^{-3}	1.6×10^{-2}	3.6×10^{-2}
Condensate+	not Reported	4×10^{-8}	6×10^{-7}	2.2×10^{-6}
μc/ml I-133				
Reactor Water	Gross Iodine	3.6×10^{-3}	-	2.0×10^{-1}
Condensate+	Only	$<1.2 \times 10^{-7}$	-	4.1×10^{-6}
Decontamination Factor				
I-131	Gross Iodine	3×10^4	3×10^4	2×10^4
I-133	Only	$>3 \times 10^4$		5×10^4
Average	$>3 \times 10^4$	3×10^4	3×10^4	3×10^4

*Analytical Methods:
1. Radiochemical separation.
2. Gross decay and spectrometry data on untreated samples.
3. Gross decay, spectrometry, and ion exchange filtration.

+ Values corrected for dilution by secondary steam.

Carryover of Radioiodines from the Hotwell to the Off-Gas

Although it was plausible that a significant reduction of iodine would occur in the Dresden Unit 1 hotwell and the air ejector due to gas washing, accurate data to support this hypothesis has only recently become available. This was primarily due to the extremely low iodine concentrations in the off-gas.

Prior to the last refueling outage, Dresden Unit 1 was operating with several defective fuel assemblies in the core which resulted in a relatively high off-gas (3×10^4 to 5×10^4 μc/sec) and iodine-131 (3.5×10^2 μc/sec) release to the moderator.

Iodine-131 activity levels observed in the off-gas during this period were approximately 5×10^{-4} c/sec, or a total decontamination factor of 7×10^6 between the reactor water and the off-gas. If one assumes that a DF of 3×10^4 occurred between the reactor water and hotwell, the DF between the hotwell and off-gas would be 2×10^2.

4.5.3 Conclusions

Measurements performed at Dresden Unit 1 indicate an iodine decontamination factor of 3×10^4 to 10^5 between the reactor water and the condensate and a decontamination factor of 2×10^2 between the hotwell and the off-gas. A total iodine decontamination factor of 7×10^6 was measured between the primary water and the off-gas.

XII. PLANT MANAGEMENT

XII PLANT MANAGEMENT

1.0 PLANT ORGANIZATION

(Same as Unit 2 PDAR as amended)

The station superintendent, along with his supervisory personnel, will be responsible for activities associated with the operation and maintenance of the plant. This group will be provided with support from the technical staff engineers located at the station and Commonwealth's engineering staff in Chicago, Illinois. The station superintendent, supervisory personnel, technical staff, and operating and maintenance personnel represent an aggregrate of approximately 500 man-years of noteworthy operation of Dresden Unit 1. Additional personnel may be selected from Dresden Station employees, Commonwealth's employees at other generating stations and other departments, as well as outside the company.

2.0 OPERATION SAFEGUARDS

(Conforming amendment of Unit 2 PDAR required where indicated by ‡)

Startup, shutdown and all other repetitive operations will be performed in accordance with plant approved procedures. Check lists will be utilized to assure proper status of equipment prior to startup.

‡ Emergency plans applicable with respect to Unit 1 will be modified as necessary to apply to all units. In the event a situation arises which might compromise safety by continued operation, power production will be reduced to a safe level or the plant will be shutdown as quickly as the situation is detected. If necessary, pre-planned emergency action will be taken to protect persons and property.

2.1 Radiation Control

‡ The radiation control standards and procedures applicable to the Unit 1 radiation protection program
‡ will be extended to all units. These standards and procedures apply to all operating, maintenance and special work performed in the plant.

2.2 Records

Ledger type books will be used in the control room and radioactive waste facility to record the various plant operations and conditions. Separate log sheets will also be maintained for routine data and special tests that may not be otherwise recorded. These records, along with the various plant computer output logs, recorder charts, radiation records and plant licenses and permits, will be on file at the plant for the period of time required by local and federal regulating bodies.

3.0 ADMINISTRATIVE SAFEGUARDS

(Conforming amendment of Unit 2 PDAR required where indicated by ‡)

‡ The administrative safeguards, presently in force for operation of Unit 1, will be extended to all
‡ units of the Dresden Station. The specific details of the application of these safeguards to this plant will be prepared later. Equipment manuals describing plant equipment and their functions will be supplied to plant personnel. The station management and operating personnel will receive requisite training respecting the design and operation of the plant. Employees assigned to the plant will assist in the initial preoperational testing of its systems and components.