ATTACHMENT 1

TECHNICAL EVALUATION REPORT

DRESDEN STATION UNITS 2 AND 3

STATION BLACKOUT EVALUATION

Science Applications International Corporation

An Employee-Owned Company

TABLE OF CONTENTS

TECHNICAL EVALUATION REPORT
DRESDEN STATION UNITS 2 AND 3
STATION BLACKOUT EVALUATION

1.0 BACKGROUND

On July 21, 1988, the Nuclear Regulatory Commission (NRC) amended its regulations in 10 CFR Part 50 by adding a new section, 50.63, "Loss of All Alternating Current Power" (1). The objective of this requirement is to assure that all nuclear power plants are capable of withstanding a station blackout (SBO) and maintaining adequate reactor core cooling and appropriate containment integrity for a required duration. This requirement is based on information developed under the commission study of Unresolved Safety Issue A-44, "Station Blackout", (2-6).

The staff issued Regulatory Guide (RG) 1.155, "Station Blackout," to provide guidance for meeting the requirements of 10 CFR 50.63 (7). Concurrent with the development of this regulatory guide, the Nuclear Utility Management and Resource Council (NUMARC) developed a document entitled, "Guidelines and Technical Basis for NUMARC Initiatives Addressing Station Blackout at Light Water Reactors," NUMARC 87-00 (8). This document provides detailed guidelines and procedures on how to assess each plant's capabilities to comply with the SBO rule. The NRC staff reviewed the guidelines and analysis methodology in NUMARC 87-00 and concluded that the NUMARC document provides an acceptable guidance for addressing the 10 CFR 50.63 requirements. The application of this method results in selecting a minimum acceptable SBO duration capability from two to sixteen hours depending on the plant's characteristics and vulnerabilities to the risk from station blackout. The plant's characteristics affecting the required coping capability are: the redundancy of the on-site emergency AC power sources, the reliability of on-site emergency power sources, the frequency of loss of off-site power (LOOP), and the probable time to restore off-site power.

In order to achieve a consistent systematic response from licensees to the SBO rule and to expedite the staff review process, NUMARC developed two

generic response documents. These documents were reviewed and endorsed by the NRC staff (9) for the purposes of plant specific submittals. The documents are titled:

1. "Generic Response to Station Blackout Rule for Plants Using Alternate AC Power," and

2. "Generic Response to Station Blackout Rule for Plants Using AC Independent Station Blackout Response Power."

A plant-specific submittal, using of the above generic formats, provides only a summary of results of the analysis of the plant's station blackout coping capability. Licensees are expected to ensure that the baseline assumptions used in NUMARC 87-00 are applicable to their plants and to verify the accuracy of the stated results. Compliance with the SBO rule requirements is verified by review and evaluation of the licensee's submittal and audit review of the supporting documents as necessary. Follow up NRC inspections assure that the licensee has implemented the necessary changes as required to meet the SBO rule.

In 1989, a joint NRC/SAIC team headed by an NRC staff member performed audit reviews of the methodology and documentation that support the licensees' submittals for several plants. These audits revealed several deficiencies which were not apparent from the review of the licensees' submittals using the agreed upon generic response format. These deficiencies raised a generic question regarding the degree of the licensees' conformance to the requirements of the SBO rule. To resolve this question, on January 4, 1990, NUMARC issued additional guidance as NUMARC 87-00 Supplemental Questions/Answers (10) addressing the NRC's concerns regarding the deficiencies. NUMARC requested that the licensees send their supplemental responses to the NRC addressing these concerns by March 30, 1990.

2.0 REVIEW PROCESS

The review of the licensee's submittal is focused on the following areas consistent with the positions of RG 1.155:

A. Minimum acceptable SBO duration (Section 3.1),

B. SBO coping capability (Section 3.2),

C. Procedures and training for SBO (Section 3.4),

D. Proposed modifications (Section 3.3), and

E. Quality assurance and technical specifications for SBO equipment (Section 3.5).

For the determination of the proposed minimum acceptable SBO duration, the following factors in the licensee's submittal are reviewed: a) off-site power design characteristics, b) emergency AC power system configuration, c) determination of the emergency diesel generator (EDG) reliability consistent with NSAC-108 criteria (11), and d) determination of the accepted EDG target reliability. Once these factors are known, Table 3-8 of NUMARC 87-00 or Table 2 of RG 1.155 provides a matrix for determining the required coping duration.

For the SBO coping capability, the licensee's submittal is reviewed to assess the availability, adequacy and capability of the plant systems and components needed to achieve and maintain a safe shutdown condition and recover from an SBO of acceptable duration which is determined above. The review process follows the guidelines given in RG 1.155, Section 3.2, to assure:

a. availability of sufficient condensate inventory for decay heat removal,

b. adequacy of the class 1E battery capacity to support safe shutdown,

c. availability of adequate compressed air for air-operated valves necessary for safe shutdown,

d. adequacy of the ventilation systems in the vital and/or dominant areas that include equipment necessary for safe shutdown of the plant,

e. ability to provide appropriate containment integrity, and

f. ability of the plant to maintain adequate reactor coolant system inventory to ensure core cooling for the required coping duration.

The licensee's submittal is reviewed to verify that required procedures (i.e., revised existing and new) for coping with SBO are identified and that appropriate operator training will be provided.

The licensee's submittal for any proposed modifications to emergency AC sources, battery capacity, condensate capacity, compressed air capacity, appropriate containment integrity and primary coolant make-up capability is reviewed. Technical specifications and quality assurance set forth by the licensee to ensure high reliability of the equipment, specifically added or assigned to meet the requirements of the SBO rule, are assessed for their adequacy.

The licensee's proposed use of an alternate AC power source is reviewed to determine whether it meets the criteria and guidelines of Section 3.3.5 of RG 1.155 and Appendix B of NUMARC 87-00.

This SBO evaluation is based on a review of the licensee's submittals dated April 17, 1989 (12) (and its supporting documentation, submitted on September 26, 1989 (13)) and May 18, 1990 (14), discussions with the licensee at NRC headquarters on October 4 and 5, 1989, December 20, 1989, and March 28, 1990, and the available information in the plant Updated Final Safety Analysis

Report (UFSAR) (15); it does not include a concurrent site audit review of the supporting documentation. Such an audit may be warranted as an additional confirmatory action. This determination would be made and the audit would be scheduled and performed by the NRC staff at some later date.

3.0 EVALUATION

3.1 Proposed Station Blackout Duration

Licensee's Submittal

The licensee, Commonwealth Edison (CECo), calculated (12 and 14) a minimum acceptable station blackout duration of four hours for the Dresden Station Units 2 and 3. The licensee stated that a modification is necessary to attain this proposed coping duration. This modification is described in Section 3.5.

The plant factors used to calculate the proposed SBO duration are:

1. **Off-site Power Design Characteristics**

   The plant AC power design characteristics group is "P1" based on:

   a. Expected frequency of grid-related LOOPs of less than one per 20 years,

   b. Estimated frequency of LOOPs due to extremely severe weather (ESW) which places the plant in ESW Group "1,"

   c. Estimated frequency of LOOPs due to severe weather (SW) which places the plant in SW Group "2," and

   d. Independence of the plant off-site power system characteristic of "I1/2."

2. **Emergency AC (EAC) Power Configuration Group**

   The EAC power configuration group at Dresden is "D." The site is equipped with three emergency diesel generators, one for each unit and one shared between the two units. Two emergency diesel

generators are necessary to operate safe shutdown equipment of both units for an extended period following a LOOP.

The licensee stated that the shared emergency diesel generator (EDG 1/2) breaker logic will be modified to allow the diesel generator to be connectable to safety buses 23-1 and 33-1 simultaneously from the control room.

3. **Target Emergency Diesel Generator Reliability**

The licensee stated that a target EDG reliability of 0.95 was selected based on the unit average EDG reliability for the last 100 demands of greater than 0.95, consistent with NUMARC 87-00.

A diesel generator reliability program incorporating the five elements discussed in Regulatory Guide 1.155 will be established to ensure this target is maintained. In addition, CECo is monitoring the resolution of Generic Issue B-56: Diesel Generator Reliability. When the final guidance on the resolution of this issue is published, CECo will review, and if necessary, revise the program in a manner consistent with the new guidance.

Review of Licensee's Submittal

Factors which affect the estimation of the SBO coping duration are: the independence of the off-site power system grouping, the estimated frequency of LOOPs due to ESW and SW conditions, the expected frequency of grid-related LOOPs, the classification of EAC, and the selection of EDG target reliability. The licensee's estimation of the frequency of LOOPs due to ESW condition conforms with that given in Table 3-2 of NUMARC 87-00.

Using Table 3-3 of NUMARC 87-00, the expected frequency of LOOPs at Dresden due to SW condition is estimated to be "0.0184" or "0.0084" placing the site in an SW group "3" or "2" depending on the site having

offsite power transmission lines either on one or multiple rights-of-way, respectively. The licensee's submittal stated that the plant is in SW group "2" indicating that the site has power transmission lines on multiple rights-of-way. A review of the Dresden UFSAR indicates that the site could be considered to have transmission lines on multiple rights-of-way.

Our review of the plant UFSAR indicates that the licensee has properly evaluated the plant independence of the offsite power grouping, as "I1/2." Characterization of the independence of the offsite power as "I1/2" requires the implementation of a modification that consists of installing, as part of the AAC modification, a cross-tie between safety buses 23-1 and 33-1. This cross-tie needs to meet the requirements of Class 1E. With the cross-tie, the safety buses in both units could be fed by either one of two independent sources of offsite power. Details of the modifications are discussed in Section 3.5.

The licensee correctly established the Emergency AC Power configuration as group "D" and selected a target EDG reliability of 0.95. In selecting a target reliability of 0.95, the licensee was following the guidance of Reference 15, Section 3b, which allows a reduction of the target reliability from the 0.975 required by RG 1.155 to 0.950 provided that the following conditions are met:

1. The ACC power source is sized to power the complete contingent of safety related and non-safety related loads associated with one safety division of each unit that are normally expected to be available for the LOOP power condition.

2. The AAC power source is connectable to all EDG buses of all the units.

3. The AAC source should be diverse from existing EDGs. Lack of diversity must be justified by addressing how common mode failures are minimized.

The licensee appears to meet the first two requirements. Insufficient information is available regarding the proposed AAC power source to evaluate the licensee's proposal against the third requirement.

In response to the requirement for an EDG reliability program the licensee stated in the submittal dated May 18, 1990 (14) that a reliability program consistent with the guidance provided in RG 1.155 and NUMARC 87-00 will be followed to maintain the targeted reliability.

In conclusion, we concur with the licensee that the offsite power design characteristic of the site can be "P1" provided that the licensee implements, as proposed, the class 1E cross-tie between the safety busses 23-1 and 33-1. Based on this modification, the required coping duration for the site would be four hours.

3.2 Alternate AC (AAC) Power Source

Licensees Submittal

The licensee proposes to install an AAC, in the form of a non-class 1E diesel generator with a 2000 hour rating of 5700 kW, that would be available within one hour and could provide power to any of the four safety buses in the two units at Dresden Station. An AAC of this capacity could power one division of the shutdown loads of both units simultaneously, see Figure 1 (14). The licensee stated that the installation of the AAC will meet all the criteria defined in Appendix B of NUMARC 87-00.

Review of Licensee's Submittal

Although the licensee is committed to install an AAC which conforms to the guidance provided in Appendix B to NUMARC 87-00, it did not provide sufficient information to review the proposed modification. The only information supplied is that the AAC will be a non-class 1E diesel generator with a 2000 hour rating of 5700 kW and that it would be

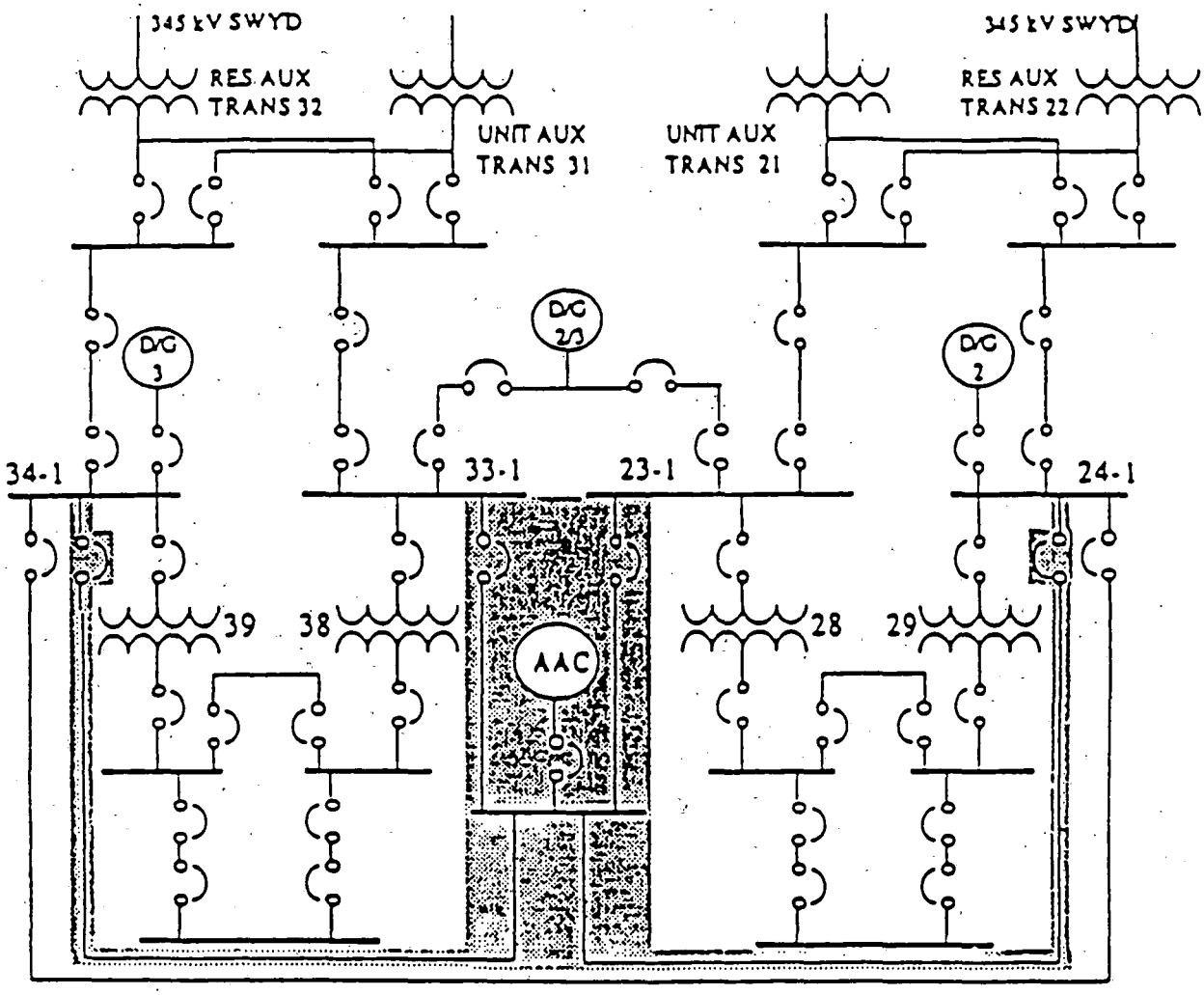

Figure 1: Dresden Electrical One Line Diagram With AAC

available within one hour. With a capacity of 5700 kW, the proposed AAC power source would produce twice the power of an EDG, hence it would be capable of powering one safety train of each unit simultaneously. This capacity is considered adequate.

The proposed circuits for connecting the AAC power source to the safe shutdown buses may be credited as the cross-tie between safety buses 23-1 and 33-1. However, all of the connections from safety buses 23-1, 24-1, 33-1, and 34-1 to the AAC power source output circuit breaker would have to be safety grade since all these circuits are directly connected to the AAC power source output breaker.

The detailed design of the AAC power source needs to be reviewed to verify that the requirements of NUMARC 87-00 Appendix B are met.

3.3 Station Blackout Coping Capability

The plant coping capability for the required duration of four hours is assessed based on the following results:

1. **Condensate Inventory for Decay Heat Removal**

Licensee's Submittal

The licensee stated that the isolation condenser in conjunction with the HPCI system would be used for decay heat removal during a SBO event. Since the isolation condenser system receives make-up from the river, an inexhaustible supply of water inventory for decay heat removal is available.

Review of Licensee's Submittal

Decay heat removal would be via the isolation condenser, which is a closed loop on the primary side. The isolation condenser is cooled by river water make-up supplied through the diesel driven fire pump.

We agree with the licensee that sufficient supply of water is available for decay heat removal during an SBO event. However, the NPSH of the fire pumps as well as the cleanliness of the water as it relates to possible clogging of the system and the isolation condenser is a concern. The licensee needs to verify that the NPSH of the fire pumps is sufficient for all feasible conditions. Further, it needs to verify that the make-up system for the isolation condenser provides water of sufficiently high quality to prevent the system and the isolation condenser from fouling and becoming inoperable.

2. **Class 1E Battery Capacity**

Licensee's Submittal

The AAC power source will energize a battery charger on each unit within one hour. Calculations have been performed which indicate that these batteries have sufficient capacity to meet the station blackout loads, with no load shedding, for one hour.

Review of Licensee's Submittal

We reviewed the licensee's battery sizing calculations (17) which showed that the batteries can last for four hours provided non-essential loads were shed within 30 minutes. Although we did not have the new battery loading calculations, we concur with the licensee that for the one hour period, prior to the AAC power source becoming available, the battery can support the connected safe shutdown loads.

3. **Compressed Air**

Licensee's Submittal

The licensee stated no air-operated valves are relied upon to cope with a station blackout for one hour. The relief valves needed for depressurization and decay heat removal are DC-powered and do not depend on compressed air for operation. However, compressed air can be restored once the AAC power source becomes available after one hour.

Review of Licensee's Submittal

A review of systems required to function during the first hour of an SBO event, including HPCI, reactor vessel safety and relief valves, and isolation condenser, was performed to determine if compressed air was required. Our review concurs with the licensee that no air-operated valves are relied upon during the first hour of an SBO event.

4. **Effects of Loss of Ventilation**

Licensee's Submittal

The AAC power source will support the required HVAC within one hour. During the first hour, however, no HVAC will be available to areas containing SBO response equipment. This section documents that reasonable assurance of operability is established for the containment and all dominant areas of concern during the first hour.

a. <u>Dominant Areas of Concern</u>

The dominant areas of concern (DAC) at Dresden were chosen from rooms that, based on documented engineering judgement, (1) contained station blackout response equipment, (2) have

substantial heat sources, and (3) lack adequate heat removal systems due to the blackout. These areas are listed in the following table along with their associated station blackout temperature, type of heat-up analysis performed, and justification for Reasonable Assurance of Operability (RAO).

AREA	ONE HR. TEMP.	ANALYSIS	RAO JUSTIFICATION
Aux Elect Equip Room	118°F*	NUMARC	less than 120°F
Control Room	119°F	transient (non-NUMARC)	less than 120°F
HPCI Room	130°F	transient (non-NUMARC)	equipment evaluation
Isolation Condenser area	167°F*	NUMARC	installation of qualified transmitter

* - These temperatures were determined using the methodology outlined in NUMARC 87-00, Section 7.2.4. As documented in NUMARC 88-00, Appendix E, these temperatures are steady-state values representing approximations to the 4-hour station blackout bulk room temperatures.

Reasonable assurance of equipment operability is established without further analysis if temperatures in the DAC are calculated to be equal to or less than 120°F (NUMARC 87-00 Supplemental Questions/Answer #2.2) (10).

One modification is required to provide reasonable assurance of equipment operability in the above areas. An isolation condenser level indication transmitter qualified for the expected station blackout thermal profile will be installed to ensure that control room indication is provided during a station blackout event. Procedure revisions are required for opening access and panel doors in the Control Room and panel doors in the Auxiliary Electric Equipment Rooms.

b. Containment

A loss of ventilation analysis has been performed for the drywell under station blackout conditions. This analysis

determines that the drywell bulk temperature would be less than 207°F after an hour of a station blackout. This calculation indicates that the drywell temperature does not reach the point at which operators are required to manually depressurize the reactor.

c. Suppression Pool

Relief valve actuations and HPCI turbine exhaust will increase the temperature of the suppression pool in a station blackout. However, since the isolation condenser is the primary means of decay heat removal from the reactor throughout the transient, the suppression pool does not heat up significantly (less than 10°F).

Review of Licensee's Submittal

The licensee' submittal (14) and supporting calculations were reviewed for consistency and content. The evaluation of the control room (18) and isolation condenser area (19) temperature one hour into an SBO event are reasonable. As noted in the licensee's submittal, the NUMARC methodology (8) develops an average steady-state bulk air temperature. However, the extrapolation back to a one-hour temperature from the steady-state temperature is not part of the NUMARC methodology, as inferred by the licensee submittal. In those cases where the initial and steady-state temperatures do not vary greatly, a one-hour approximation can reasonably be made, as in the case of the auxiliary electrical equipment room and the control room. However, when the difference between initial and steady-state temperature is greater, the one-hour value is much less certain, as is the case of the HPCI room. The licensee's supporting calculations (20) indicate a final temperature of 195°F while the submittal (14) claims a one-hour value of 130°F. Since the HPCI only operates for a short period of time to make up the primary system, the one-hour temperature and the steady-state temperature

would be expected to be approximately the same. The licensee needs to address the apparent discrepancy.

The licensee's justification for operation at the calculated one-hour temperature is appropriate for the control room and the auxiliary electrical equipment rooms (AEERs). However, the licensee needs to verify that the control room and AEER heat-up calculations were performed using the pertinent initial maximum bounding design temperatures for these rooms, not the normal room temperatures. In regard to the HPCI room and the isolation condenser area, the licensee claims all equipment is operable at the calculated one-hour temperature, with one exception. The exception will be addressed with the installation of a qualified replacement.

Insufficient information was supplied by the licensee to verify that the licensee considered all equipment required by SBO or that all equipment considered was properly evaluated. This area would be best investigated by an on-site inspection.

5. **Containment Isolation**

Licensee's Submittal

The AAC power source will be capable of energizing all containment isolation valves after one hour. However, the station list of containment isolation valves was reviewed to ensure that containment integrity can be provided during station blackout conditions, if this becomes necessary. Valves meeting the exclusion criteria listed in NUMARC 87-00, Section 7.2.5, were excluded from consideration. In addition, valves meeting the following criteria were also excluded from consideration.

(1) Valves that are always procedurally closed during 100% power operation,

(2) Valves that are upstream or downstream of containment isolation valves that meet the NUMARC 87-00 exclusion criteria.

The valves that may require manual actuation to ensure appropriate containment integrity under station blackout conditions will be incorporated into the appropriate station procedure.

Review of Licensee's Submittal

The licensee's criteria for excluding containment isolation valves (CIVs) from the requirement to have closure capability and position indication during an SBO event only partially follows NUMARC 87-00. Two exclusion criteria were added by the licensee without basis or justification. The first criterion, valves that are always procedurally closed during 100% power, would not seem valid lacking both positive position controls and a clear definition of when it could be employed. For example, could a valve be excluded if it is normally closed at 100% but open at 90%? The second licensee-added criterion would allow the exemption of the second pair of CIVs (inside and outside of containment) to be excluded in certain cases. While this is not necessarily incorrect, it is an expansion of the current exemptions. Both licensee-added exemption criterion require a basis and justification, as well as a list of CIVs excluded by them. The licensee needs to ensure that these CIVs are secured closed during an SBO event by providing for indications of valve position, independent of the preferred and class 1E power supplies. In the supporting documentation (13) a discrepancy exists between the table of CIVs (Table 5-1) and the summary list of CIVs requiring evaluation on page 10-1. Specifically, the summary table shows two valves, MO2(3)-1001A and MO2(3)-1001B, in each unit which do not appear in the table of CIVs. This discrepancy needs to be resolved.

6. **Reactor Coolant Inventory**

Licensee Submittal

The licensee determined (12) that less than 20,000 gallons of water are required for reactor make-up water for four hours. A Reactor Coolant System leak rate of 61 gpm (18 gpm per recirculating pump seal leakage and a 25 gpm leakage rate allowed by Technical Specifications) was assumed. The condensate storage tank (CST) maintains a minimum volume of 90,000 gallons in reserve for the HPCI system, which exceeds the required quantity for coping with a 4-hour SBO event. No plant modifications or procedure revisions are needed to utilize this water source.

Review of Licensee's Submittal

Reactor coolant system makeup would be accomplished by use of the steam-driven HPCI pump. With a total primary system leakage of 61 gpm (18 gpm from each recirculation pump plus 25 gpm system leakage allowed by Technical Specifications) the make-up requirements are 14,640 gallons in four hours. Additional make-up is also required to compensate for primary water volume shrinkage as a result of the limited cooldown mentioned in Appendix A to the licensee's submittal (14). The licensee's determination of total make-up volume of less than 20,000 gallons (presumably 14,640 gallons for leakage and less than 5,360 gallons for cooldown) is reasonable and well within the minimum contents of the condensate tank (90,000 gallons).

3.4 Proposed Procedures and Training

Licensee's Submittal

Procedure revisions not associated with modifications will be completed one year after the notification provided by the Directors, Office of NRR. Contingent on notification, procedure revisions associated with the

modifications, except for the installation of the AAC, will be completed by the end of the fall 1992 refueling outage for Unit 3. Procedure revisions associated with the AAC will be completed by December 1995, if notification is provided by the NRC staff by August 1990.

The following potential procedure revisions have been determined to be necessary to meet the station blackout rule.

TOPIC	PROCEDURE	NATURE OF REVISION
Loss of Ventilation	DOA 5750-1	open access and panel doors
Containment Isolation	DGA-12	valves that may require manual actuation
Severe Weather	DOA 010-2	inspection for potential missiles, restoration of plant systems
SBO Response	DGA-12	instruction on isolation condenser and HPCI use, instructions on diesel generator loading, instructions on AC power recovery, appropriate references to other procedures
Station Battery	DEP 8300-18,19,20	aging margin accounted for Performance Tests when evaluating battery capacity requirements
Restoration of AC	SPSO I-1	system load dispatcher guidance Power

Review of Licensee's Submittal

We neither received nor reviewed the affected procedures. These procedures are plant specific actions concerning the required activities to cope with an SBO event. The licensee identified the procedures that need to be modified and/or created to cope with an SBO event. It is the licensee's responsibility to revise and implement these procedures, as

needed, to mitigate an SBO event and to assure that these procedures are complete and correct, and that the associated training needs are carried out accordingly.

3.5 Proposed Modifications

Licensee's Submittal

The licensee stated that all modifications, except those associated with the installation of the AAC, will be completed by the end of the fall 1992 refueling outage for Unit 3. Modifications associated with the AAC will be completed by December 1995, if notification is provided by the NRC staff by August 1990.

An installation time exceeding two years is necessary due to the:

- high complexity of the proposed modification,
- equipment ordering lead times required, and
- the number of outages required to tie in the new equipment to all safety buses in both units.

The following modifications are proposed:

a. The installation of an Alternate AC power source which will be a non-class 1E diesel generator meeting the following requirements in addition to the AAC criteria defined in Appendix B of NUMARC 87-00:

   i. The power source will be connectable to all 4.16 kV safety buses at the site. These buses are 23-1, 24-1, 33-1, and 34-1.

   ii. The power source will have the capacity of two existing emergency diesel generators (5,700 kW at 2,000 hours) and will therefore be capable of supplying all loads necessary to

achieve and maintain safe shutdown (hot shutdown) for both units at the site during a loss of off-site power.

iii. The power source will be available within one hour of the onset of the station blackout.

b. Installation of a cross-tie between safety buses 23-1 and 33-1 to improve the off-site power system to the "I1/2" group, as part of the AAC modification,

c. Logic changes allowing the shared emergency diesel generator to connect to safety buses 23-1 and 33-1 simultaneously from the control room, and

d. The installation of an isolation condenser level indication transmitter that is qualified for the expected station blackout thermal profile.

Review of Licensee's Submittal

The licensee's submittal gives few details on the proposed modifications. Conceptually, they would greatly assist Dresden in coping with an SBO event. Modification "a" above is discussed in Section 3.2.

The installation of a cross-tie between safety buses 23-1 and 33-1, modification "b," does alter the off-site power system to "I1/2" (see Section 3.1). However, the licensee needs to make all of the connections from safety buses 23-1, 24-1, 33-1, and 34-1 to the ACC power source output circuit breaker safety grade since these circuits are directly connected to the AAC power source output breaker.

Another concern is that modification "c," logic changes to allow DG 2/3 to simultaneously feed buses 23-1 and 33-1, has no obvious bearing on the mitigation of an SBO event. Therefore, this modification will not be reviewed and should be submitted under a separate request, if desired.

3.6 Quality Assurance and Technical Specifications

Quality Assurance

The licensee stated that a QA program meeting the requirements of RG 1.155 Appendices A and B will be applied to cover non-safety related equipment needed for coping with a station blackout that are not already covered by existing QA requirements in Appendices B or R of 10 CFR 50.

The QA program developed to meet this commitment should be audited prior to its application to the AAC implementation.

Technical Specifications

The licensee does not address the impact on the Technical Specifications of the modifications proposed to meet the requirements of an SBO event.

This review concludes that the installation of a diesel generator to serve as an AAC should be included in the technical specifications. The technical specifications should address the reliability program for the AAC and the surveillance program established for the diesel generator and its support system.

4.0 CONCLUSIONS

Based on our review of the licensee's submittals, the related supporting documents, and discussions with licensee personnel, we find that Dresden's Unit 2 and 3 submittal conforms to the requirements of the SBO rule and the guidance of R.G. 1.155 with the following exceptions:

1. **Alternate AC Power Source**

   The licensee is proposing to add a non-class 1E diesel generator to serve as an AAC power source for both units. Although the licensee is committed to install an AAC power source which conforms to the guidance provided in Appendix B to NUMARC 87-00, it did not provide sufficient information to review the proposed modification. Therefore, the licensee needs to provide a detailed description of the proposed AAC for NRC staff's review.

2. **Condensate Inventory for Decay Heat Removal**

   Since the isolation condenser make-up water is from the river via the diesel driven fire water pump, the licensee needs to verify that the pump has sufficient NPSH under all conditions, and that the quality of river water is such that the isolation condenser does not become inoperable due to clogging/fouling.

3. **Effects of Loss of Ventilation**

   A discrepancy seems to exist between the one-hour temperature given in the submittal and that developed in the supporting calculations for the HPCI room. The submittal states that the first hour temperature is 130°F while the licensee's supporting calculations state that 195°F is the steady state bulk air temperature. The first hour and steady state temperatures are expected to be approximately the same. The licensee needs to verify that the control room and AEER heat-up calculations were made using the

initial maximum bounding design temperatures for these rooms, not the normal temperatures.

4. **Containment Isolation**

In excluding containment isolation valves (CIVs) from the requirements for closing when needed and from position indication during SBO, the licensee added two criteria to the accepted list in RG 1.155. No justification or bases were submitted with the new criteria. These two additional criteria need to be clearly justified. The licensee needs to ensure that these CIVs are secured closed during an SBO by providing valve position indication independent of the preferred and class 1E power systems. Also, the licensee needs to provide clarification for the CIV listing discrepancy in their documentation package supporting the SBO submittals.

5. **Proposed Modifications**

a. The proposed cross-tie between safety buses 23-1 and 33-1 should be designed and built to class 1E requirements. The licensee needs to address this when providing the detailed description of the modification for the AAC.

b. The proposed logic changes to allow the shared EDG to connect to safety buses 23-1 and 33-1 simultaneously has no bearing on the mitigation of the SBO event and needs to be either dropped from consideration, or submitted under a separate request if desired.

6. **Quality Assurance and Technical Specifications**

The licensee submittal did not address changes to the Technical Specifications. The addition of an AAC will require some additions to the Technical Specifications; this must be addressed.

5.0 REFERENCES

1. The Office of Federal Register, "Code of Federal Regulations Title 10 Part 50.63," 10 CFR 50.63, January 1, 1989.

2. U.S. Nuclear Regulatory Commission, "Evaluation of Station Blackout Accidents at Nuclear Power Plants - Technical Findings Related To Unresolved Safety Issue A-44," NUREG-1032, Baranowsky, P. W., June 1988.

3. U.S. Nuclear Regulatory Commission, "Collection and Evaluation of Complete and Partial Losses of Off-site Power at Nuclear Power Plants," NUREG/CR-3992, February 1985.

4. U.S. Nuclear Regulatory Commission, "Reliability of Emergency AC Power System at Nuclear Power Plants," NUREG/CR-2989, July 1983.

5. U.S. Nuclear Regulatory Commission, "Emergency Diesel Generator Operating Experience, 1981-1983," NUREG/CR-4347, December 1985.

6. U.S. Nuclear Regulatory Commission, "Station Blackout Accident Analyses (Part of NRC Task Action Plan A-44)," NUREG/CR-3226, May 1983.

7. U.S. Nuclear Regulatory Commission Office of Nuclear Regulatory Research, "Regulatory Guide 1.155 Station Blackout," August 1988.

8. Nuclear Management and Resources Council, Inc., "Guidelines and Technical Bases for NUMARC Initiatives Addressing Station Blackout at Light Water Reactors," NUMARC 87-00, November 1987.

9. Thadani, A. C., letter to W. H. Rasin of NUMARC, "Approval of NUMARC Documents on Station Blackout (TAC-40577)," October 7, 1988.

10. Thadani, A. C., letter with attachment to A. Marion of NUMARC, "Publicly Noticed Meeting, December 27, 1989," dated January 3, 1990, (confirming "NUMARC 87-00 Supplemental Questions/Answers," December 27, 1987).

11. Nuclear Safety Analysis Center, "The Reliability of Emergency Diesel Generators at U.S. Nuclear Power Plants," NSAC-108, Wyckoff, H., September 1986.

12. Richter, M., Letter to T. Murley, Director of the Office of Nuclear Reactor Regulations, U.S. Nuclear Regulatory Commission, "Response to Station Blackout Rule, for Dresden Units 2 and 3," dated April 17, 1989.

13. Richter, M., Letter to P. Gill, U.S. Nuclear Regulatory Commission, "Transmittal of Station Blackout Calculation for Dresden and Quad Cities Stations," dated September 26, 1990.

14. Richter, M., Letter to T. Murley, Director of the Office of Nuclear Reactor Regulations, U.S. Nuclear Regulatory Commission, "Revised Response to Station Blackout Rule, for Dresden Station Units 2 and 3," dated May 18, 1990.

15. Dresden Station Updated Final Safety Analysis Report.

16. Tam, P. S., Memorandum for "Daily Highlight - Forthcoming Meeting with NUMARC on Station Blackout (SBO) Issues (TAC 40577)," dated April 25, 1990, (providing a draft Staff Position Regarding Use of Emergency AC Power Sources (EDGs) as alternate AC (AAC) Power Sources, dated April 24, 1990).

17. Sargent and Lundy Calculations 705600-19-4 (R1), 705600-19-5 (R2), and 7318-32-19-2 on Profile and Battery Sizing for Dresden Units 2 and 3.

18. Sargent and Lundy Calculation 3C2/3-0389-001(R2), "Loss of Ventilation During Station Blackout" dated December 12, 1989 for Dresden Units 2 and 3.

19. Sargent and Lundy Calculations HSBO-02(RO), "Isolation Condenser Area Average Temperature Following Station Blackout" dated December 14, 1989 for Dresden Units 2 and 3.

19. Sargent and Lundy Calculations HSBO-02(RO), "Isolation Condenser Area Average Temperature Following Station Blackout" dated December 14, 1989 for Dresden Units 2 and 3.

20. Sargent and Lundy Calculation HSBO-1(RO), "HPCI Room Average Temperature Following Station Blackout" dated December 12, 1989 for Dresden Units 2 and 3.