U. S. NUCLEAR REGULATORY COMMISSION

REGION III

Report No. 50-237/OL-90-02

Docket Nos. 50-237; 50-249 Licenses No. DPR-49; DPR-25

Licensee: Commonwealth Edison Company
Opus West III
1400 Opus Place
Downers Grove, IL 60515

Facility Name: Dresden Nuclear Power Station - Units 2 and 3

Examination Administered At: Dresden Nuclear Power Station
Morris, IL 60450

Examination Conducted: July 17-27, 1990

RIII Examiner: John A. Hammer 8-30-90
J. Hammer Date

R. Miller

M. Daniels

Chief Examiner: Michael E. Bielby Sr. 8/30/90
M. Bielby Date

Approved By: M J Jordan 8/31/90
M. J. Jordan, Chief Date
Operator Licensing Section #1

Examination Summary

Examination administered on July 17-20 and 23-27, 1990 (Report No. 50-237/OL-90-02)
Written and operating requalification examinations were administered to fifteen (15) Senior Reactor Operators (SROs) and nine (9) Reactor Operators (ROs). Four operating shift crews, and two staff crews, each consisting of a Shift Engineer (SE), Shift Control Room Engineer (SCRE), Balance of Plant (BOP), and Nuclear Shift Operator (NSO), were evaluated on the simulator portion of the NRC examination. Written initial license retake examinations were also administered to one SRO and two ROs.

Results: Four of six crews were evaluated as satisfactory in the simulator portion of the NRC requalification examination. Overall individual performance was evaluated as satisfactory for thirteen (13) SROs and eight (8) ROs. Two staff SROs failed the dynamic simulator and one operating shift RO failed the Job Performance Measure (JPM) portion of the examination. Additionally, the facility failed one staff SRO on the dynamic simulator. Independent grading by the NRC, in accordance with the criteria of NUREG-1021, Operator Licensing Examiner Standards, ES-601, Revision 5, assigned the Dresden Requalification Training Program an overall rating of satisfactory.

The three initial license retake individuals, one (1) SRO and two (2) ROs, passed their respective written examinations.

Although the requalification training program was evaluated as satisfactory, several major discrepancies were identified which could impact the effectiveness of the facility's licensed operator training program. These concerns are listed in Section 4.

REPORT DETAILS

1. Examiners

*+M. Bielby, Sr., Chief Examiner, NRC, Region III
+J. Hammer, NRC, Region III
+R. Miller, Sonalysts, Inc.
+M. Daniels, Sonalysts, Inc.
D. McNeil, Observer, NRC, Region III
R. Doornbos, Observer, NRC, Region III
*M. Jordan, Observer, NRC, Region III

2. Exit Meeting

An exit meeting was conducted with the training staff on July 27, 1990, followed by a management exit meeting on July 30, 1990, at the Dresden Nuclear Power Station. The following personnel were in attendance at these meetings:

Facility Representatives

*E. Mantel, Service Director
*J. Kotowski, Production Superintendent
*+G. Smith, Assistant Superintendent, Operations
*J. Randich, Nuclear Shift Operator Steward
*T. Gallaher, Nuclear Quality Programs
*K. Peterman, Regulatory Assurance Superintendent
*D. Lowenstein, Regulatory Assurance
*+S. Stiles, Training Supervisor
*+R. Weidner, Plant Training Department
*+D. Gronek, Operations Lead Instructor
+W. Carter, Training
+M. Evans, Training
+R. Sitts, Production Training Center
+D. Schavey, Production Training Center

NRC Representatives

*D. Hills, Resident Inspector
*M. Jordan, Chief, Operator Licensing Section #1
*+M. Bielby, Sr., Chief Examiner

+Denotes those present at the Training Department exit meeting on July 27, 1990.

*Denotes those present at the management exit meeting on July 30, 1990.

3. Requalification Training Program Observations

The quantity of examination material exceeded the criteria of NUREG-1021, Operator Licensing Examiner Standards, ES-601, Revision 5. The licensee's training staff were very cooperative at correcting deficiencies during development of the requalification examination; however, the quality of the material in the Requalification Written Exam Question Bank, Scenario Test Bank, and the Job Performance Measure (JPM) Test Bank needs improvement. The following comments on specific areas are made to aid the licensee in upgrading future requalification material as indicated.

a. Written Exam (Limits and Controls, Statics)

(1) Some questions were subjective and did not always illicit the expected answer. Although not required, a multiple choice format is highly desirable because it can test the same knowledge level and remain objective in nature. As such, the use of multiple choice questions remove subjectivity and possible biasing during grading. Multiple choice questions should follow the guidelines of NUREG/BR-0122, Examiners' Handbook for Developing Operator Licensing Written Examinations, Revision 5, Sections 4.6 and 5.3.

(2) The static exams need to cover a broader scope of systems and topics. Although the systems covered were of high KA value, there were a number of common questions and systems covered. For example, during the first week of examinations, two statics exams each had three (3) questions concerning concepts associated with the CRD flow control valve being closed. One static exam contained a significant number of questions (8 out of 18) dealing with low and low-low reactor water levels trips, initiations, and isolations.

In each example, a single question could have been asked to illicit the desired knowledge, thus allowing a broader scope of systems/topics/concepts to be examined. Additionally, the examinee would not be penalized by a double jeopardy situation.

b. Scenarios

(1) The initial identification of Individual Simulator Critical Tasks (ISTCs) by the licensee was inadequate. After discussions with the NRC, the training staff seemed to have clearer concept of what constituted an ISCT, and proceeded to add/delete additional ISCTs as appropriate. For future requalification examinations, NUREG-1021, ES-604, Revision 6, describes four criteria that should be met before a step is considered an ISCT.

(2) The scenarios used during the exam were adequate as written; however, a great deal of time was spent during the preparation week trying to write around simulator fidelity problems. Once simulator infidelities are corrected, scenarios in the Test Bank will require upgrading to insure they test a cross-section of the Dresden Emergency Operating Procedures (DEOPs).

c. Job Performance Measures (JPM)

(1) A majority of the questions were direct procedure lookup or memorization (i.e., "list isolation/initiation/trip signal(s)") format. Future JPM questions need to be more task or system oriented, and address the higher levels of knowledge (comprehension, application/analysis/problem solving).

(2) The JPMs often listed valve and component numbers but did not include the noun name or description, which made it difficult for the examiner(s) to evaluate proper valve/component actuation.

d. Evaluators

Overall, the evaluators demonstrated good evaluation techniques during the entire requalification examination. They asked appropriate followup questions to clarify operator actions during the JPMs and dynamic scenarios. Only a few isolated instances of excessive verbal cueing were noted by the examiners.

During the dynamic simulator phase of the requalification examination, the evaluators demonstrated good judgment and detection skills (ability to pick up on errors). Additionally, the facility evaluators were grading more stringently in the dynamic simulator which resulted in a more conservative evaluation of one additional examinee, which was considered an additional strength for the evaluators.

One area that needs improvement is verifying that the examinee is finished performing a JPM or answering the associated question(s) without cueing the individual. Often, a simple question such as "Are you finished?" will illicit this information.

e. Exam Security

During initial stages of administering dynamic scenarios, operators involved in upcoming scenarios were observed unaccompanied in the halls and lunchroom of the simulator facility. As such, the potential existed for both examined and non-examined groups to interface during breaks between scenarios. This condition was pointed out to the training staff, who corrected the condition. Future occurrences of similar situations may result in suspension of the examination.

4. Major Discrepancies

a. Communications format and terminology used by operators during the dynamic scenarios were inconsistent. Generally, there was a lack of "repeat-back" or some form of acknowledgment that information had been received and understood. During one scenario, temperature information was communicated to an operator who proceeded to write down a different value.

The command and control function exhibited by a majority of the SROs in this area requires upgrading. Operators would sometimes talk

over, or override, each other when giving information. During one instance, the SE was attempting to issue Dresden Emergency Operating Procedure (DEOP) orders but was overridden by another operator, resulting in a third operator not receiving the DEOP order.

b. The use of only one simulator operator to perform the concurrent functions of phone talker, auxiliary plant personnel and running the simulator appeared to interfere, and potentially skew evaluation and performance of examinees. The following inadequacies were noted during the examination:

   (1) Inadvertently cueing examinees when giving verbal communications (two occasions).

   (2) Potential to cue examinees with facial expressions when simulating in-plant radio communications.

   (3) Late implementation of malfunctions into the scenarios which minimized the desired parameter effect(s). (Last available reactor feed pump trip inserted after the crew had increased reactor water level.)

   The use of a contracted individual as simulator operator also appeared to contribute toward the following inadequacies:

   (1) Unfamiliarity with plant procedures (potential fires and SRO fire brigade leader responsibilities).

   (2) Inconsistencies at resetting recorders, erasing flow charts, and replacing procedures between scenarios.

c. During dynamic simulator scenarios, the NRC observed the simulator operator assume the role of Center Desk Operator and simulate performance of duties related to that position as requested by the crew being examined. The Center Desk Operator is a licensed position, and licensed operators from crews in training do not currently fill that position. Thus, the crew is not evaluated on certain actions (i.e., Standby Gas Treatment initiation, drywell cooling, etc.).

   The NRC is requesting a response from the licensee describing how the individuals assuming the Center Desk Operator in-plant are adequately trained for that position, particularly under emergency situations.

d. The culmination of modeling problems such as lack of decay heat, electrical distribution, malfunction inadequacies such as inability to fail individual rods/MSIVs, and numerous inoperable hardware such as control switch(es), indicating light(s), meter(s), recorder(s), and annunciators(s) contributed to the difficulty of writing adequate examination scenarios.

5. General Observation

a. One area that requires improvement is scheduling during the examination week. A realistic sense of time to complete portions of the examination needs to be applied in the future. A better utilization of examiner's time such as performing in-plant and simulator JPMs concurrently needs to be planned in detail. More thought needs to be devoted toward completion of exam sections (JPMs, dynamic scenarios) in the same day for individuals, and the order in which the exam is administered needs to be considered to minimize stress on operators, evaluators, and examiners.

b. The training staff was courteous and professional throughout the preparation and examination weeks. They were attentive to NRC needs and expedited obtaining required examination material. Organization and indexing of simulator JPMs and associated procedures in individual notebooks for evaluators and examiners was excellent.

c. Plant cleanliness was good.

d. Security, Radiation Protection and Operations personnel were very cooperative in assuring there were no unnecessary delays associated with badging, dosimetry and accessing the station.

6. Requalification Examination Results Comparison

Parallel grading by the NRC and facility on the written and operating portions of the examination met criteria established by the guidelines in NUREG-1021, Operator Licensing Standards, ES-601, Revision 5. The facility and the NRC evaluations were in agreement on the two crew failures, two individual dynamic simulator failures, and one JPM failure. The facility failed one additional individual on the dynamic simulator. In accordance with the criteria of NUREG-1021, ES-601, Revision 5, the Dresden Requalification Training Program received an overall rating of satisfactory.

7. Initial Retake Written Examination Results

All three candidates (one SRO, two ROs) successfully passed their written retake examinations.

There were only two post-exam comments on the RO exam and none on the SRO exam, this indicates a thorough pre-exam review by the licensee. The licensee's post-exam comments and subsequent NRC resolution are enclosed (see Enclosure 3).

8. Exit Meeting

An informal Training Department exit meeting, and a formal management exit meeting were conducted at the Dresden Nuclear Power Station Auditorium on July 27 and July 30, 1990, respectively. The facility representatives that attended these meetings are listed in Section 2. of this report.

The following items were discussed during the exit meeting:

a. The observations of the training program made by the examiners during the administration of the requalification examination (see Section 3).

b. The major concerns relating to the Requalification Training Program (see Section 4).

c. The preliminary results and facility's required actions for unsatisfactory crew and individual performance. Pursuant to the requirements of your Requalification Training Program, the crew and individuals who failed shall be removed from licensed duties until remediation and re-examination has been satisfactorily completed. As long as the Training Program remains satisfactory, the NRC will not require re-examination of unsatisfactory administrative crew(s).

The preliminary rating of the Dresden Requalification Training Program was presented as satisfactory at the exit meeting. The facility was informed that the results will be reviewed by regional management and that they would be documented in this examination report.

NOTE: Preliminary results at the exit meeting were given as three (3) individual and <u>one</u> (1) crew failure on the operating portion of the examination. Subsequent results were presented on August 9, 1990, via telecon between Mr. D. Gronek (Dresden Training Staff) and Mr. M. Bielby (Chief Examiner) as three (3) individual and <u>two</u> (2) crew failures.

ENCLOSURE 3

NRC RESPONSE TO FACILITY COMMENTS ON

RO INITIAL RETAKE WRITTEN EXAMINATIONS

ADMINISTERED JULY 23, 1990

QUESTION 018

Concerning the ATWS (Anticipated Transient Without Scram) System:

Which ONE of the following statement correctly defines the effects on the ARI valves and the recirculation system when the ATWS system is initiated?

a. Low RPV level energizes the ARI valves and after a nine (9) second time delay, trips the recirculation pump field breakers.

b. High reactor pressure trips the recirculation pump field breakers after a nine (9) second time delay, and energizes the ARI valves instantaneously.

c. Low RPV level trips the recirculation pump field breakers and instantaneously and energizes the ARI valves after a nine (9) second time delay.

d. High reactor pressure instantaneously trips the recirculation pump field breakers and energizes the ARI valves.

ANSWER

d.

COMMENT

The pre-exam review comment that a. is also correct was accepted, but did not get incorporated. Both a. and d. are correct.

Reference: Dresden Lesson Plan, Nuclear Boiler Instrumentation, Page 33.

RESPONSE

Comment accepted. Both "a." and "d." are correct.

QUESTION 080

Unit 3 is operating at 60% rated power with CRD Pump "A" tagged out of service for maintenance. A trip of CRD Pump "B" results in EIGHT (8) control rod "ACCUMULATOR TROUBLE" alarms.

Why does DOA 300-1, Control Rod Drive System Failure, direct the operator to immediate scram the reactor?

a. To prevent reactor coolant back leakage into the CRD hydraulic accumulators and the subsequent high area radiation conditions.

b. To ensure a reactor scram can be accomplished within the maximum scram time since rod insertion will be slower at lower accumulator pressures.

c. To ensure sufficient control rods can be fully inserted to shut down the reactor since a generic CRD problem has occurred.

d. To prevent control rods from failing to fully insert on a scram signal due to inadequate accumulator pressures to drive the control rods in.

ANSWER c.

COMMENT The pre-exam review comment incorrectly listed "a." and "c." as correct answers vice "b." and "c.". As a result, distractor "a." was modified, and two correct answers ("b." and "c.") remained on the exam. Accept both "b." and "c." as correct answers.

Reference: Lesson Plan, Batteries, Page 4, Objective 7.
DOA 6900-1, DC Electrical System Failure, Page 2.

RESPONSE Comment accepted. "b." and "c." are correct answers.

ENCLOSURE 4

REQUALIFICATION PROGRAM EVALUATION REPORT

Facility: Dresden Nuclear Power Station

Examiners: M. Bielby, RIII Chief Examiner
J. Hammer, RIII Examiner
R. Miller, Sonalysts, Inc.
M. Daniels, Sonalysts, Inc.

Dates of Evaluation: July 17-27, 1990

Areas Evaluated: X Written X JPM X Simulator

Examination Results:

	RO Pass/Fail	SRO Pass/Fail	Total Pass/Fail	Evaluation (S or U)
Written Examination	9/0	15/0	24/0	S
Operating Examination				
JPM	8/1	15/0	23/1	S
Simulator	9/1	13/2	22/2	S
Evaluation of facility written examination grading				S

Crew Examination Results:

	Crew 1 Pass/Fail	Crew 2(Staff) Pass/Fail	Crew 3 Pass/Fail	Evaluation (S or U)
Operating Examination	Pass	Fail	Pass	
	Crew 4 Pass/Fail	Crew 5(Staff) Pass/Fail	Crew 6 Pass/Fail	
	Pass	Fail	Pass	S

Overall Program Evaluation

Satisfactory X Unsatisfactory ____ (List major deficiency areas with brief descriptive comments)

1. Operator Communications - lack of acknowledgment for receipt of information. Operators overriding each other.

2. Use of one simulator operator - overloaded with duties of phone talker, performing auxiliary personnel functions and operating the simulator.

3. Lack of simulator fidelity - modeling and malfunction inadequacies, equipment inoperability and abnormalities.

4. Absence of evaluation of the second RO on panels as the Center Desk position (licensed).

Submitted:	Forwarded:	Approved:
M. Bielby	M. Jordan	G. Wright
Examiner	Section Chief	Branch Chief

U. S. NUCLEAR REGULATORY COMMISSION
SENIOR REACTOR OPERATOR LICENSE EXAMINATION
REGION 3

FACILITY: Dresden 2 & 3

REACTOR TYPE: BWR-GE3

DATE ADMINISTERED: 90/07/20

CANDIDATE:

INSTRUCTIONS TO CANDIDATE:

Points for each question are indicated in parentheses after the question. To pass this examination, you must achieve an overall grade of at least 80%. Examination papers will be picked up four and one half (4 1/2) hours after the examination starts.

NUMBER QUESTIONS	TOTAL POINTS	CANDIDATE'S POINTS	CANDIDATE'S OVERALL GRADE (%)
99	100.00		

All work done on this examination is my own. I have neither given nor received aid.

Candidate's Signature

MASTER COPY

NRC RULES AND GUIDELINES FOR LICENSE EXAMINATIONS

During the administration of this examination the following rules apply:

1. Cheating on the examination means an automatic denial of your application and could result in more severe penalties.

2. After the examination has been completed, you must sign the statement on the cover sheet indicating that the work is your own and you have not received or given assistance in completing the examination. This must be done after you complete the examination.

3. Restroom trips are to be limited and only one candidate at a time may leave. You must avoid all contacts with anyone outside the examination room to avoid even the appearance or possibility of cheating.

4. Use black ink or dark pencil only to facilitate legible reproductions.

5. Print your name in the blank provided in the upper right-hand corner of the examination cover sheet.

6. Fill in the date on the cover sheet of the examination (if necessary).

7. You may write your answers on the examination question page or on a separate sheet of paper. USE ONLY THE PAPER PROVIDED AND DO NOT WRITE ON THE BACK SIDE OF THE PAGE.

8. If you write your answers on the examination question page and you need more space to answer a specific question, use a separate sheet of the paper provided and insert it directly after the specific question. DO NOT WRITE ON THE BACK SIDE OF THE EXAMINATION QUESTION PAGE.

9. Print your name in the upper right-hand corner of the first page of answer sheets whether you use the examination question pages or separate sheets of paper. Initial each of the following answer pages.

10. Before you turn in your examination, consecutively number each answer sheet, including any additional pages inserted when writing your answers on the examination question page.

11. If you are using separate sheets, number each answer and skip at least 3 lines between answers to allow space for grading.

12. Write "Last Page" on the last answer sheet.

13. Use abbreviations only if they are commonly used in facility literature. Avoid using symbols such as < or > signs to avoid a simple transposition error resulting in an incorrect answer. Write it out.

14. The point value for each question is indicated in parentheses after the question. The amount of blank space on an examination question page is NOT an indication of the depth of answer required.

15. Show all calculations, methods, or assumptions used to obtain an answer.

16. Partial credit may be given. Therefore, ANSWER ALL PARTS OF THE QUESTION AND DO NOT LEAVE ANY ANSWER BLANK. NOTE: partial credit will NOT be given on multiple choice questions.

17. Proportional grading will be applied. Any additional wrong information that is provided may count against you. For example, if a question is worth one point and asks for four responses, each of which is worth 0.25 points, and you give five responses, each of your responses will be worth 0.20 points. If one of your five responses is incorrect, 0.20 will be deducted and your total credit for that question will be 0.80 instead of 1.00 even though you got the four correct answers.

18. If the intent of a question is unclear, ask questions of the examiner only.

19. When turning in your examination, assemble the completed examination with examination questions, examination aids and answer sheets. In addition, turn in all scrap paper.

20. To pass the examination, you must achieve an overall grade of 80% or greater.

21. There is a time limit of (4 1/2) hours for completion of the examination. (or some other time if less than the full examination is taken.)

22. When you are done and have turned in your examination, leave the examination area as defined by the examiner. If you are found in this area while the examination is still in progress, your license may be denied or revoked.

QUESTION: 001 (1.00)

A reactor scram has just occurred on Unit 2 from 95% rated power. Plant conditions are as follows:

- about 35 control rods did not fully insert
- reactor power is 2 to 3 percent by APRMs
- reactor recirculation flow has been runback to minimum

Why does DEOP 400-5, Failure to Scram, direct the operator to leave the reactor recirculation pump operating at minimum speed?

a. To maximize mixing of the boron should Standby Liquid Control injection be required later.

b. To prevent the main turbine generator from tripping and ensure it is available for heat removal.

c. To prevent exceeding the bottom head to steam dome differential temperature limit.

d. To minimize the fuel cladding temperature by maximizing cooling flow through the core.

QUESTION: 002 (1.00)

Unit 3 was operating at 100% rated power when a complete loss of all AC power occurred due to a loss of the grid and a failure of all diesel generators to start.

Which ONE of the following correctly describes the method by which reactor pressure will be controlled?

a. Stabilize reactor pressure less than 1060 psig with the main turbine bypass valves.

b. Initiate flow to the isolation condenser and maintain a cooldown rate less than 100 deg/hr.

c. Manually open ADSVs as necessary to reduce reactor pressure to less than 200 psig, to allow low pressure ECCS injection.

d. ADSVs will fail open on a loss of all AC power and rapidly depressurize the reactor.

QUESTION: 003 (1.00)

During control of Unit 3 for an emergency condition Core Spray (CS) and Low Pressure Coolant Injection (LPCI) are being operated for reactor water level control and torus cooling. Plant conditions are as follows:

- 2 LPCI pumps in loop B are in torus cooling mode
- 2 CS pumps are injecting into the vessel
- Torus water level = 8 feet
- Torus bulk water temperature = 175 deg F
- Drywell pressure = 1.5 psig
- Torus chamber air space pressure = 1.5 psig
- Torus bottom pressure = 4.9 psig

Which ONE of the following is the maximum flow rate which can be obtained from the CS and LPCI systems?

a. CS: 1000 gpm per loop; LPCI: 4000 gpm loop B

b. CS: 2000 gpm per loop; LPCI: 2000 gpm loop B

c. CS: 4000 gpm per loop; LPCI: 4000 gpm loop B

d. CS: 4000 gpm per loop; LPCI: 8000 gpm loop B

QUESTION: 004 (1.00)

While a fuel bundle is in transit through the cattle shoot from the vessel to the storage racks, a Spent Fuel Pool low level alarm is received and level in the fuel pool is observed to be decreasing.

Which ONE of the following actions are the Fuel Handlers required to take in accordance with DFP 800-1, Master Refueling Procedure.

a. The spent fuel bundle must be returned to the core position from which it was removed.

b. The spent fuel bundle must be placed in a fuel storage rack in the Spent Fuel Pool.

c. The spent fuel bundle must be lowered to a level that is below the top of the spent fuel racks.

d. The movement of spent fuel bundle must be suspended immediately regardless of its position.

QUESTION: 005 (1.00)

Upon a loss of ALL site AC power, reactor water level can be determined by the:

a. refuel level indicator on panel 902-4.

b. narrow range level indicators on panel 902-5.

c. medium range level indicators on panel 902-5.

d. wide range level indicator on panel 902-5.

QUESTION: 006 (1.00)

Specific safety requirements must be met for general clearance to enter the Drywell.

Which ONE of the following identifies the minimum oxygen concentration required for Drywell entry?

a. Greater than 8.5%

b. Greater than 29.5%

c. Greater than 19.5%

d. Greater than 0.5%

QUESTION: 007 (1.00)

After a scram on Unit 2, an OD-7 for rod position is requested. Some of the rod positions are indicating "++".

Which ONE of the following statements represents the condition of the rods with a position indication of "++"?

a. These rods are fully inserted beyond the 00 notch position.

b. These rods are at notch 00, but are not indicating because the scram has not been reset.

c. These rods are at some unknown position in the core.

d. These rods are fully withdrawn (notch 48)

QUESTION: 008 (1.00)

Which ONE of the following situations requires immediate notification of Technical Services Health Physics (TSHP)?

a. An individual receives a dose in excess of 1.5 times his daily or weekly administrative approved limit.

b. An individual receives an unmonitored dose in excess of 100 mrem to the whole body without proper dosimetry.

c. An individual's TLD/film badge read out are sufficiently suspect to suggest tampering or badge "spiking".

d. An individual receives a dose which is in excess of the limits that have been established of 10CFR20.

QUESTION: 009 (1.00)

In response to Abnormal Conditions, Dresden procedures permit prolonged operation outside the Technical Specifications provided:

a. The Station Shift Engineer concurs that continued operation does not place the plant outside design conditions.

b. The Shift Technical Advisor (STA) or the Station Control Room Engineer concurs that no license violation has occurred due to operating outside the Technical Specifications.

c. The Station Manager and the Nuclear Operations Duty Officer concur that continued operation is acceptable.

d. The NRC Operations Center concurs that continued operation has been properly justified based on present plant conditions .

QUESTION: 010 (1.00)

A Type One (1) RWP is required for all routine access or work in radiological controlled areas where personnel are NOT expected to exceed a whole body dose equivalent of __a__ mrem/day and is valid for a maximum of __b__ months dated from January 1.

QUESTION: 011 (1.00)

The Chemistry Department has reported that the daily reactor coolant sample has just been analyzed and the reactor coolant activity is 4.0 uci/gram.

Which ONE of the following Technical Specification actions is required to be taken?

a. Initiate an orderly shutdown of the plant and place the plant in Hot Shutdown within 12 hours.

b. Take a second sample, and if greater than ~~0.4~~ 4.0 uci/gram, an orderly shutdown of the plant shall be initiated to place the plant in Cold Shutdown within 24 hours.

c. Immediately shutdown the plant by inserting a manual scram and place the plant in Cold Shutdown within 24 hours.

d. Immediately shutdown the plant to Hot Shutdown conditions and place the plant in Cold Shutdown within 12 hours.

QUESTION: 012 (1.00)

Which ONE of the following colors on a jumper would indicate a jumper for a constantan thermocouple?

a. Blue

b. Red

c. Yellow

d. Green

QUESTION: 013 (1.00)

Which ONE of the following is the MAXIMUM reactor power level at which a Drywell entry can be performed?

a. 5%

b. 10%

c. 25%

d. 40%

QUESTION: 014 (1.00)

Which ONE of the following personnel, by title, is authorized to approve dose extensions for individuals to exceed the weekly administrative dose limits of 300 mrem?

a. Individual's Group Supervisor

b. Radiation Health Physics Supervisor

c. Administrative and Support Services Assistant Supervisor

d. Station Superintendent

QUESTION: 015 (1.00)

During the performance of a station procedure, the operator reads these statements under Paragraph E. "This is a controlled posted procedure. Any authorized change will be brought to the attention of the Operating Engineer".

These statements indicate which ONE of the following?

a. The procedure is authorized to be used, but only if the Operating Engineer is present.

b. The procedure is approved for use, but has not been approved by the On Site Review Committee.

c. The procedure has been approved, but has not yet been upgraded in accordance with the writers guide.

d. The procedure has been approved, but is not automatically updated with the latest revisions, hence the Operating Engineer notification.

QUESTION: 016 (1.00)

An operator returns from two (2) days off, and works the following shift hours as a control room operator during a unit 2 outage.

Saturday - 6 am to 2 pm
Sunday - 6 am to 2 pm
Monday - 6 am to 6 pm
Tuesday - 6 am to 6 pm

Select from the hours below the maximum number of additional hours the operator can work before 6 pm on Wednesday.

a. 7 hours

b. 8 hours

c. 12 hours

d. 16 hours

QUESTION: 017 (1.00)

A valve line up is being performed which requires a second person independent verification (IV).

Which ONE of the following statements is correct for performing the IV?

a. Two operators may work together on the alignment and the verification, provided the verifier holds a valid SRO license.

b. The person performing the valve alignment verification must observe the person performing the alignment.

c. ALARA considerations are the ONLY considerations which allow for waiving the independent verification requirement.

d. The IV may be conducted at the same time as the valve alignment, provided it is performed independently by a person of equal or greater qualification.

QUESTION: 018 (1.00)

While operating at 20% power, a turbine generator trip occurs due to a faulty relay.

In accordance with Dresden Procedures, which ONE of the following reports is required?

a. License Event Report

b. Deviation Report

c. System Malfunction Report

d. Significant Event Report

QUESTION: 019 (1.00)

Unit 2 had been operating at 80% steady state power when a temporary loss of feedwater occurred. Plant conditions are as follows:

- An automatic scram signal has been initiated due to reactor water level dropping below +8 inches.
- DGP 2-3, Reactor Scram, actions have been taken.
- Multiple control rods indicate full out.
- All APRMs indicate approximately 33% power.
- All of the RPS scram solenoid fuse group lights are extinguished.
- Rods are being inserted manually utilizing the Reactor Manual Control System.
- Reactor level is being maintained at +25 inches with one reactor feed pump.

SELECT the correct emergency classification for this situation.

a. Unusual Event

b. Alert Emergency

c. Site Area Emergency

d. General Emergency

QUESTION: 020 (1.00)

Dresden 2 has just experienced a loss of offsite power concurrent with a 2 psig Drywell pressure. The diesels fast start as designed.

From the listing of events in Column I, SELECT from Column II the correct time at which the event is designed to occur, following the simultaneous loss of power and the Drywell high pressure. (NOTE: Each response in Column II may be utilized more than once or not at all and only a single answer may occupy one answer space.)
(4 required at 0.25 each)

COLUMN I	COLUMN II
_____a. 2nd LPCI Pump Starts	1. 0 seconds
_____b. Diesel Breaker Closes	2. 5 seconds
_____c. Core Spray Pump Starts	3. 10 seconds
_____d. 1st LPCI Pump Starts	4. 15 seconds
	5. 20 seconds
	6. 45 seconds

QUESTION: 021 (1.00)

Which ONE of the following statements explains how the ESS uninterruptable power supply system provides a continuous source of AC power?

a. Normal power is supplied by the Turbine Building 250 VDC with the alternate power supplied by bus 29 through a rectifier.

b. Normal power is supplied by bus 29 through a rectifier, and switches automatically to bus 25 on loss of power to bus 29.

c. Normal power is supplied by bus 25 with alternate power supplied by MCC 28-2 on loss of power to bus 25.

d. Normal power is supplied by bus 29, and the Turbine Building 250 VDC takes over automatically on loss of power to bus 29.

QUESTION: 022 (1.00)

During normal plant operation, a sustained undervoltage condition occurs on 4KV bus 23.

Select the set of automatic actions which will occur due to the undervoltage condition.

a. Non safety related loads trip, bus 23 to 23-1 breaker trips, DG 2 starts and closes in on bus 23-1, and bus 26 and bus 27 supply breakers trip.

b. Non safety related loads trip, bus 23 to 23-1 breaker trips, DG2/3 starts and closes in on bus 23-1 and bus 25 breakers trip.

c. All loads trip, bus 23 to 23-1 breaker trips, DG 2 starts and closes in on bus 23 and bus 26 and 27 breakers trip.

d. All loads trip, bus 23 to 23-1 breaker trips, DG 2/3 starts and closes in on bus 23-1 and bus 25 breakers trip.

QUESTION: 023 (1.00)

Which ONE of the following identifies the primary function of the charcoal adsorber beds in the off-gas system?

a. Dilutes the hydrogen concentration

b. Filters out particulate matter

c. Delays release of radioactive gases

d. Removes entrained moisture

QUESTION: 024 (1.00)

During normal plant operation, a high level alarm occurs on the isolation condenser. An investigation reveals that the shell side water temperature is increasing.

Which ONE of the following could be happening in the isolation condenser system?

a. The makeup valve to the shell side of the heat exchanger is leaking.

b. The condensate return valve to the reactor is leaking.

c. The steam line vent to the "A" main steam line has failed closed.

d. The isolation condenser has developed a tube leak.

QUESTION: 025 (1.00)

During normal plant operation, power is lost to MCC 29-1.

Which ONE of the following statements correctly describes the effect on the High Pressure Coolant Injection System (HPCI)?

a. Power is lost to MO 2301-8 and MO 2301-9 (HPCI Pump Discharge Valves) making the system inoperable.

b. Power is lost to MO 2301-4 (HPCI Turbine Steam Supply Valve inside the Drywell), but will not prevent automatic initiation.

c. Power is lost to MO 2301-49 (Minimum Flow Valve) the pump will run deadheaded if injection valve fails to open.

d. Power is lost to MO 2301-15 (Reject Line to Contaminated Condensate Storage) negating reject capability.

QUESTION: 026 (1.00)

Concerning the ATWS system (Anticipated Transient Without Scram);

Which ONE of the following statements correctly defines the effects on the ARI valves and the Recirculation system when the ATWS system is initiated?

a. Low RPV level energizes the ARI valves and after after a nine (9) second time delay, trips the recirc pump field breakers.

b. High reactor pressure trips the recirc pump field breakers after a nine (9) second time delay, and energizes the ARI valves instantaneously.

c. Low RPV level trips the recirc pump field breakers instantaneously and energizes the ARI valves after a nine (9) second time delay.

d. High reactor pressure instantaneously trips the recirc pump field breakers and energizes the ARI valves.

QUESTION: 027 (1.00)

Which ONE of the following conditions will result in the bypass of the IRM HI HI and INOP scram functions?

a. The Reactor Mode Switch is in RUN, and the companion APRM is NOT downscale.

b. The Reactor Mode Switch is in STARTUP, and the IRM detector is FULLY withdrawn from the core.

c. The Reactor Mode Switch is in RUN, and the IRM detector is FULLY withdrawn from the core.

d. The Reactor Mode Switch is in STARTUP, and the companion APRM is NOT downscale.

QUESTION: 028 (1.00)

Which ONE of the following statements correctly describes the interrelationship of the LPRMs to APRM channels and LPRM groups?

a. Only 143 of the 164 LPRM detectors are required to monitor local flux patterns across the core.

b. A LPRM from the associated LPRM group may be substituted for a failed LPRM.

c. The count circuit will only recognize and count an LPRM input if the LPRM mode selector switch is in OPERATE.

d. An APRM INOP alarm is generated if the number of LPRM inputs per level of an APRM drops below two (2).

QUESTION: 029 (1.00)

A caution in Procedure DGP 1-1, Normal Unit Startup, states that prior to drawing a vacuum, the operator should verify and maintain the pressure set point approximately 50 psig greater than reactor pressure.

From the statements listed below, SELECT the ONE which is the correct reason for this caution.

a. Prevent the bypass valve from inadvertently opening and subsequently closing causing a scram from a flux/pressure spike.

b. Prevent erratic level and pressure indications caused by drawing a vacuum on the RPV.

c. Prevent severe main condenser tube erosion due to steam admission at low vacuum conditions.

d. The Bypass Valves cannot provide effective pressure control at low pressure because the differential pressure between the reactor vessel and the condenser is too low.

QUESTION: 030 (1.00)

Which ONE of the following statements correctly describes the response of a control rod scrammed by reactor pressure alone?

a. The scram time increases as the reactor pressure increases.

b. The control rod will not scram if the reactor pressure is less than 400 psig.

c. The scram is faster than with accumulator pressure alone.

d. The rod will not fully scram with reactor pressure alone due to pressure equalization across the piston.

QUESTION: 031 (1.00)

Unit 3 is in cold shutdown, with RPV water level below the main steam lines and the vessel head removed. The system engineer desires to cycle the main steam relief valves for an operability check. The Shift Supervisor determines this cannot be done at the present plant conditions.

Which ONE of the below is the reason for this decision?

a. Cycling the valves at atmospheric conditions will damage the valve seats, requiring extensive repair.

b. Cold cycling of the springs on the valves will result in fatigue on the springs, voiding the lifting pressure set points.

c. With the reactor head off, opening the relief valves would violate containment integrity, opening a line to the Suppression Pool.

d. The valves will not open, due to insufficient pressure under the valve disk to overcome the spring force on the valve.

QUESTION: 032 (1.00)

The LPRM inputs to a Rod Block Monitor (RBM) are averaged and compared to the reference APRM power signal.

SELECT the ONE statement which correctly describes the function of the Gain Adjust Circuit in the RBM system.

a. If the average of the LPRM inputs is higher than the APRM reference signal, a rod block is initiated.

b. If the average of the LPRM inputs is lower than the APRM reference signal a gain is applied to increase the RBM output to equal or exceed the APRM reference signal.

c. If the Rod Block Monitor output is initially higher than the APRM reference signal, it will immediately initiate a rod block.

d. If the difference between the local average power and the APRM reference signal is too large, the Rod Block Monitor goes into a "NULL" sequence.

QUESTION: 033 (1.00)

The TIP (Traversing Incore Probe) system is in operation at 100% power, when a radiation of 120 R/hr is detected in the Drywell.

SELECT from the following the ONE statement which accurately describes the response of the TIP system.

a. A "Tip Isolation Off Normal" alarm will occur to alert the operator of an off normal condition on the TIP system.

b. Any TIP detector not in its shield shifts to manual reverse mode withdraws to the shield chamber and five (5) minutes later the ball valve closes.

c. The TIP "Isolation Off Normal" alarm occurs, and the operator must select "Manual Reverse" and withdraw the TIP detector within five (5) minutes to prevent activation of the shear valve.

d. Any TIP detector not in its shield shifts to manual reverse mode, and withdraws to the shield chamber, and the ball valve closes when the detector is in the shield.

QUESTION: 034 (1.00)

The valve line up for the Standby Liquid Control (SLC) system is vital for the safe shutdown of the plant during an ATWS.

Which ONE of the following statements explains how valve 1101-1 (SLC inner Containment isolation valve) is verified to be in the OPEN position.

a. The final valve line up of all safety system valves is performed and verified during Drywell closeout.

b. The valve is a manually operated valve, with remote position indication in the control room.

c. The valve is a fail-open valve, with the air supply removed from the valve during normal operation.

d. The valve is opened and the motor operator is deenergized prior to securing the drywell.

QUESTION: 035 (1.00)

In reference to the Standby Liquid Control System, a minimum of 600 ppm boron in the reactor core is required to be injected within 100 minutes.

Which ONE of the following statements is correct concerning the boron injection?

a. A 600 ppm concentration will provide at least a 2% delta K Shutdown Margin during cold xenon free conditions.

b. The 100 minute maximum time requirement is necessary to provide adequate mixing, and prevent "chugging" in the core.

c. The boron solution in the core results in changing the moderator temperature coefficient from positive to negative.

d. The required 600 ppm boron concentration, in the core, includes a 25% additional margin to accommodate improper mixing.

QUESTION: 036 (1.00)

The rod worth minimizer is required to be operational at low power levels, as determined by the Low Power Set Point (LPSP).

Which ONE of the following conditions will activate the LPSP and actuate the rod blocks?

a. 20% power decreasing as sensed by the APRM reference.

b. 20% power decreasing as sensed by 1st stage turbine pressure.

c. 10% power decreasing as sensed by the main steam flow.

d. 10% power decreasing as sensed by the feedwater flow.

QUESTION: 037 (1.00)

For each control rod and its associated "four-rod light display" on the full core display of unit 3, four (4) different colors of indicating lights are used to provide indication of various conditions of the control rod drive mechanism.

For the indicator color in column I SELECT the correct condition that is indicated from column II. (NOTE: Each response in Column II may be utilized only once but more than a single answer may occupy one answer space.)
(5 required at 0.20 each)

COLUMN I	COLUMN II
_____a. White	1. Low Nitrogen Pressure or Accumulator High Water Level
_____b. Red	2. Scram Air Header Low Pressure
_____c. Amber	3. Indicates which rod is selected
_____d Blue	4. Control Rod Drive Water High Differential Pressure
	5. Control Rod Drift
	6. Control Rod Uncoupled
	7. Inlet and Outlet Scram Valves Open
	8. Not used

QUESTION: 038 (1.00)

The automatic emergency start of the diesel generator bypasses some of the protective trips for the diesel and the diesel generator supply breaker.

Which ONE of the following statements is correct concerning the diesel generator trip bypasses?

a. The ECCS fast start actuation does NOT bypass the breaker reverse power and the high differential current trips.

b. The ECCS fast start actuation does NOT bypass the diesel engine overspeed and the positive crankcase pressure trips.

c. The undervoltage fast start actuation does NOT bypass the breaker overcurrent trip.

d. The undervoltage fast start actuation does NOT bypass the diesel engine over speed and high differential current trips.

QUESTION: 039 (1.00)

The Source Range Monitor (SRM) detectors are required to be fully inserted into the core until an overlap with the Intermediate Range Monitor (IRM) instrumentation is observed.

Which ONE of the following statements correctly describes the interlocks with the reactor manual control system which enforce this overlap?

a. Attempting to retract an SRM detector which is indicating less than 500 cps will result in a rod block.

b. The SRM detector drive motor is interlocked to prevent detector withdrawal with less than 100 cps indicated.

c. Placing the Reactor Mode Switch in the RUN position will bypass all the SRM interlock functions.

d. The SRM detector drive motor is interlocked to prevent detector withdrawal until all IRM's are on range 3 or higher.

QUESTION: 040 (1.00)

ADS valves, 203-3B and 203-3C, have differences in their function as compared to the other ADS valves.

Which ONE of the following statements represents the function AND reason for the differences in the valves operation?

a. The valves have a ten (10) second time delay which inhibits the valve from opening for ten (10) seconds since its last closure, to allow for vacuum breaker operation in the relief lines.

b. The valves have an 8.5 minute time delay on the Drywell High Pressure initiation to allow Suppression Pool Cooling to be placed in service prior to admitting steam to the Suppression Pool.

c. The valves automatically close, if actuated by ADS, if Suppression Pool temperature exceeds 170 degrees F, to reduce the vibration in the Suppression Pool due to steam jet pulsations.

d. The valves have a thirty second time delay which closes the valves, if operated by high reactor pressure, to prevent over pressurization of the relief lines.

QUESTION: 041 (1.00)

While operating at 100% power, a rupture occurs in the air line supplying Feedwater Regulating Valve (FWRV) 2A, which is in service.

Which ONE of the statements below identifies the response of the FWRV?

a. The valve fails full open immediately since it uses air to close, and spring pressure to open.

b. The valve fails full open, but the speed is limited by the hydraulic damper.

c. The valve would continue to control for up to one (1) hour, being supplied by the air accumulator on the supply line.

d. The valve would "lock up" in its present position, due to the actuation of the air lock valve.

QUESTION: 042 (1.00)

During normal plant operation, the Reactor Building Ventilation System maintains a 0.25" water gage vacuum in the building. During accident conditions, the Standby Gas Treatment System maintains the negative pressure.

On Failure of the Reactor Building Ventilation and the Standby Gas Treatment Systems, which one of the following mechanisms prevents over pressurization of the Reactor Building?

a. At a pressure of 2.2" water gage, the normal ventilation supply and exhaust dampers open to equalize the pressure to the outside atmosphere.

b. At a pressure of 2.7" water gage, the Standby Gas Treatment outlet damper opens to equalize the pressure to the outside atmosphere.

c. At a pressure of 5.2" water gage, the Air Lock Isolation Bypass Valves open to equalize the pressure to the outside atmosphere.

d. At a pressure of 13.5" water gage, the Blowout Panels part from the beams on the refueling floor to equalize pressure to the outside atmosphere.

QUESTION: 043 (1.00)

Unit 2 is operating at 100% power with the recirculation pumps at 92% speed when a fault in the valve control circuit causes the discharge valve on "A" recirculation pump to move in the closed direction until fully closed.

Which ONE of the following automatic actions correctly defines the recirculation flow control system response to the valve movement?

a. When the flow mismatch exceeds 10% the mismatch circuit will trip the "A" recirc pump.

b. The "A" recirc pump will run back to 28% speed, and the scoop tube will lock up preventing further control.

c. When a flow deviation of 10% exists between the two loops, the master limiter will reduce the "B" recirc pump speed.

d. The "A" recirc pump will attempt to run back to 28% speed until the valve is fully closed, at which time the pump will trip.

QUESTION: 044 (1.00)

The Main Turbine Combined Intermediate Valves (CIV's) are designed to prevent damage to the turbine in the event of a generator trip or load reject.

On a load reject from 100% power, which ONE of the following statements is correct for the operation of the INTERCEPT Valves?

a. A drop in pressure in the Moisture Separator Reheaters (MSRs) to 105 psig will cause the Intercept Valves to go closed to prevent turbine overspeed.

b. When turbine speed increases to 105%, Intercept Valves 1, 3 and 5 begin to close, when they are 50% closed valves 2, 4, and 6 ramp closed.

c. Intercept Valves 2, 4 and 6 fully close at 103% turbine speed while valves 1, 3 and 5 are not closed until 105% turbine speed.

d. Once activated by turbine speed, all Intercept Valves remain closed until turbine speed decreases to 98% at which time all intercept valves ramp open.

QUESTION: 045 (2.00)

Utilizing the attached drawing (Figure 1) Identify the valves labeled one (1) through ten (10) in Column I from the list of valves listed in Column II. (NOTE: Each response in Column II may be used once, more than once, or not at all, and only a single answer may occupy one answer space.)
(10 required at 0.2 each)

COLUMN I	COLUMN II
_____a.	1. Scram Discharge Volume Vent Valves
_____b.	2. Scram Discharge Volume Drain Valves
_____c.	3. ARI Valves
_____d.	4. Scram Outlet Valve
_____e.	5. Backup Scram Valves
_____f.	6. Scram Dump Valves
_____g.	7. Scram Pilot Valves
_____h.	8. Scram Inlet Valve
_____i.	
_____j.	

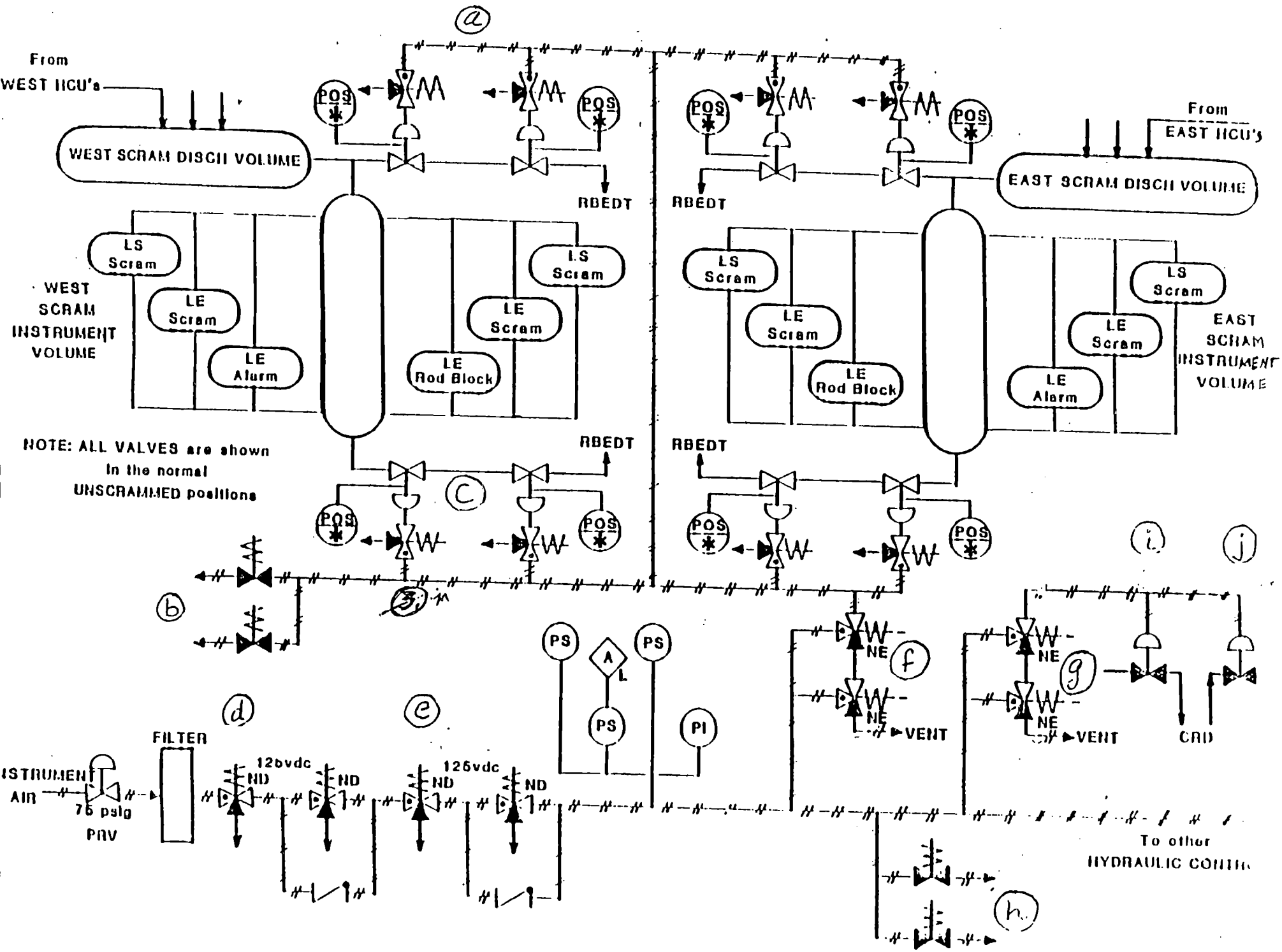
a
From
WEST HCU's
WEST SCRAM DISCH VOLUME
POS
RBEDT
LS Scram
LE Scram
LE Alarm
LE Rod Block
WEST SCRAM INSTRUMENT VOLUME
NOTE: ALL VALVES are shown in the normal UNSCRAMMED positions
From
EAST HCU's
EAST SCRAM DISCH VOLUME
EAST SCRAM INSTRUMENT VOLUME
c
b
d
e
f
g
h
i
j
PS
A
L
PI
NE
VENT
CRD
FILTER
INSTRUMENT AIR
75 psig
PRV
12bvdc
ND
To other HYDRAULIC CONTR

Figure 1

QUESTION: 046 (1.00)

One (1) of the overflow weirs to the skimmer surge tanks from the Fuel Storage Pool has become plugged during normal operation of the Fuel Pool Cooling and Cleanup System.

Which ONE of the following correctly describes the system response to this malfunction?

a. A low Low level trip of the operating Fuel Pool Cooling Pumps will result when the level in the effected Skimmer Surge Tank drops to the trip set point of 17 inches.

b. No trip of the operating pumps will occur since the trip system requires low low level in both Skimmer Surge Tanks to trip the operating pumps..

c. No trip of the operating pump will occur since the only trip of the Fuel Pool Cooling Pumps is low suction pressure at 6 psig.

d. No trip of the operating pump will occur since there is an equalizing line which will maintain Skimmer Surge Tank level, even if the inlet line to one tank is plugged.

QUESTION: 047 (1.00)

For the Reactor Water Cleanup System trip setpoints listed in COLUMN I, Select the correct trip function or protection provided from COLUMN II. (NOTE: Each response in Column II may be utilized only once and only a single answer may occupy one answer space.)
(4 required at 0.25 each)

COLUMN I	COLUMN II
_____a. Auxiliary pump cooling water outlet temperature 140 deg F	1. Closes valves 1, 1A, 2, 3, and 7 to isolate possible leakage paths.
_____b. RWCU NRHX outlet temperature 150 deg F	2. Closes valves 1, 1A, 2, and 3 to Aux Pump Seal damage.
_____c. 150 psig after the PCV Station	3. Closes valves 1, 1A, 2, and 3 to prevent dropping the filter cake.
_____d. Reactor Water Level + 8 inches	4. Closes valves 1, 1A, 2, and 3 to to protect the demineralizer resin beads.
	5. Closes valves 1, 1A, 2, 3, and 7 to prevent removal of boron and resin damage.
	6. Closes valves 1, 1A, 2, and 3 to protect the system low pressure piping and equipment.
	7. Closes valve 1, 1A, 2, and 3 to prevent loss of primary coolant to rad waste during shutdown.

QUESTION: 048 (1.00)

Dresden unit 2 is operating at 70% power when a break occurs in the Core Spray injection line between the vessel penetration and the shroud.

Which ONE of the following statements CORRECTLY DESCRIBES the line break indication and alarm functions?

a. The normal +3.2 psid differential pressure will increase to +5.9 psid and initiate alarm "Core Spray Line Break"

b. There will be no alarm or indication since the line break detection system only alarms if the system is operating and a differential pressure is sensed.

c. There would be no alarm since at 70% power the leak detection system will not detect a break due to the low delta P across the shroud.

d. The drop in pressure on the LO side of the delta P results in a -2.7 psid signal and an alarm "Core Spray Line Break".

QUESTION: 049 (1.00)

Concerning the Core Spray Injection Valves 1402-24, and 1402-25;

Which ONE of the following features provides for overpressure protection of the Core Spray low pressure piping?

a. Up to 1250 psig, a check valve installed in the piping down stream of the injection valves prevents backflow.

b. Above 350 psig reactor vessel pressure, neither valve can be opened automatically or manually.

c. Below 350 psig both valves can be opened, provided valve 1402-25 is opened first.

d. Above 350 psig, either valve can be opened, but not both valves simultaneously.

QUESTION: 050 (1.00)

The Low Pressure Coolant Injection System (LPCI) injects into the two recirculation loop lines. To prevent injecting into a loop which has a major break, a loop select logic is used to determine the LPCI injection flow path.

Which ONE of the following Statements CORRECTLY defines the LPCI Loop Select Logic, and the resulting actions?

a. The Loop Select Logic looks at the differential pressure across the recirc pumps, and if both pumps are running, initiates injection into both recirc loops.

b. The Loop Select Logic looks at the differential pressure between the two recirc loop risers and based on the differential pressure, initiates injection into the recirculation loop without the break.

c. The Loop Select Logic looks at the differential pressure between the two recirc loop risers, and if there is no difference between the differential pressures, initiates injection into recirculation loop "A".

d. If no recirc pumps are running the Loop Select Logic cannot determine intact loop status and loop selection will have to be made with the LPCI Loop Select pushbuttons.

QUESTION: 051 (1.00)

During an automatic actuation of the Low Pressure Coolant Injection System (LPCI,) an operator notices that the "A" loop system flow rate is 750 gpm, and the "A" pump minimum flow valve is in the CLOSED position.

Which ONE of the listed statements is CORRECT concerning the minimum flow valve status?

a. The valve condition is normal, the valve should stay closed until system flow reaches 1000 gpm.

b. The valve condition is abnormal, the valve should stay open until system flow reaches 1000 gpm.

c. The valve condition is abnormal since the minimum flow line stays open unless manually closed.

d. The valve condition is normal, since the minimum flow valve closes when system flow reaches 500 gpm.

QUESTION: 052 (1.00)

The plant is operating at 95% power when the Center Desk operator is directed to start SBGT fan "B" for a scheduled surveillance.

Which ONE of the following correctly describes the effect that a manual start of the SBGT fan "B" has on the SBGT system operation.

a. The SBGT System will NOT achieve the minimum required flow rate.

b. The "A" fan will auto start 10 seconds after a Group II Isolation signal is received.

c. The "A" fan will NOT auto start if the "B" fan trips.

d. The "B" fan will trip and the "A" fan will auto start if a Group II initiation signal is received.

QUESTION: 053 (1.00)

Column B lists refueling interlocks. For each situation listed in Column A, MATCH the CORRECT refueling interlock(s) from Column B that is(are) in effect. (NOTE: Each response in Column B may be used once, more than once, or not at all, and more than a single answer may occupy one answer space.)
(6 required at 0.17 each)

COLUMN A	COLUMN B
_____a. Refuel platform is over the vessel with the mode switch in REFUEL when the fuel grapple is loaded.	1. Fuel grapple power is interrupted
_____b. Mode switch in REFUEL, with one control rod withdrawn.	2. Monorail auxiliary hoist power is interrupted
_____c. Refuel platform is over the core, no hoists loaded, one rod withdrawn and the mode switch is in STARTUP.	3. Trolley-mounted hoist power is interrupted
	4. Rod block is generated
	5. Bridge motion toward the core is stopped
_____d. Refuel platform is over the core, no hoists loaded, no rods withdrawn, and the mode switch is in STARTUP.	6. No interlock or rod block applied

QUESTION: 054 (1.00)

During a reactor startup on Unit 2, the operator gives a notch out signal to a control rod. If the Reactor Manual Control System auxiliary timer times out during the control rod withdrawal, a _____ is received.

a. RWM withdraw block

b. RBM rod block

c. Select block

d. RPIS inop block

QUESTION: 055 (1.00)

During normal power operation the Drywell and Torus are maintained at specified pressures to minimize pressure transients in the event of a LOCA.

Which ONE of the following statements correctly identifies the pressures maintained in the two (2) areas and the methods used to achieve those pressures.

a. The nitrogen pressure control valve maintains the Torus pressure at 1.1 psig and the pumpback system maintains a 0.5 psid differential between the Torus and Drywell.

b. The nitrogen pressure control valve maintains the Drywell pressure at .5 psig and the Torus to Drywell vacuum breakers maintain a 1.0 psid differential between the Torus and the Drywell.

c. The nitrogen pressure control valve maintains the Drywell pressure at 1.1 psig and the pump back system maintains a 1.0 psid differential between the Drywell and the Torus.

d. The nitrogen pressure control valve maintains the Drywell pressure at 1.0 psig and the Torus to Reactor Building vacuum breakers maintain a 1.1 psid differential pressure between the Torus and the Reactor Building

QUESTION: 056 (1.00)

A transient has occurred on Unit 3 which has resulted in the following plant conditions:

- 20 control rods indicate between notch 26 and 48
- APRMs indicate between 3 and 5 percent
- All Reactor Water level indication is unreliable
- DEOP 400-1, RPV Flooding, has been entered and is being executed by the Shift Supervisor
- Five (5) ADS valves are OPEN
- Reactor pressure is 310 psig and DECREASING
- Condensate and Feedwater systems are injecting

Which ONE of the following statements explains the plant status that is indicated by the DECREASING reactor pressure.

a. The feed flow rate is less than the steaming rate therefore indicating that core cooling is INSUFFICIENT.

b. The vessel has been flooded to the main steam lines therefore ensuring ADEQUATE core cooling.

c. The steaming rate is less than the feed water flow rate therefore indicating that the reactor is SHUTDOWN.

d. The reactor decay heat is insufficient to vaporize the injected feed water therefore ensuring core SUBMERGENCE.

QUESTION: 057 (1.00)

DEOP 400-1, RPV Flooding, is being executed on Unit 3. Plant conditions are as follows:

- Reactor is shutdown
- ALL Reactor Water level instruments indicate UPSCALE
- LPCI is injecting
- Five (5) ADS valves are OPEN

Select the reason that DEOP 400-1 directs the operators to control injection to maintain reactor vessel pressure at least 54 psig above drywell pressure.

a. To prevent EXCESSIVE hydraulic loading on the reactor vessel and the ADS valves.

b. To prevent siphoning the drywell atmosphere into the reactor vessel and contaminating the reactor coolant.

c. To ensure that the ADS valves remain open and reactor water level is INCREASING.

d. To ensure adequate steam cooling of the core even if reactor water level is DECREASING.

QUESTION: 058 (1.00)

A transient on Unit 3 has resulted in the following plant conditions:
- The reactor has scrammed
- Torus water temperature is 119 deg F and INCREASING
- MSIVs have isolated
- Reactor pressure is 1100 psig and being controlled by SRVs

Select the reason that Technical Specification 3.7.c.(4) requires the reactor to be depressurized to less than 150 psig at normal cooldown rates when the Torus Water temperature EXCEEDS 120 deg F.

a. To ensure complete condensation of the steam exiting the Drywell to Torus downcomers during a design basis LOCA.

b. To ensure that the Torus Water level will remain above the minimum required level during a design basis LOCA.

c. To prevent chugging at the opening of the Drywell to Torus downcomers during a design basis LOCA.

d. To prevent excessive hydraulic loading on the Drywell to Torus downcomers during a design basis LOCA.

QUESTION: 059 (1.00)

A transient is in progress on Unit 2 which has resulted in a failure of rods to insert on a scram signal.

Why does DEOP 400-5, Failure to Scram, direct the operator to LOCKOUT BOTH Core Spray pumps until otherwise directed?

a. To prevent injecting a lower quality water until HPCI clean source has been exhausted.

b. To prevent cold water injection from placing excessive thermal stresses on the fuel cladding.

c. To prevent removal of any boron from the core when Standby Liquid Control injection is required.

d. To prevent cold water spray from placing excessive thermal stresses on the reactor vessel.

QUESTION: 060 (1.00)

During refueling operations on Unit 3, Technical Specification 3.10.A requires that the refueling interlocks be operable for fuel loading.

What is the basis for the refueling interlock that requires all control rods to be fully inserted into the core?

a. To prevent mispositioning core components due to excessive core flow with shutdown cooling in service.

b. To prevent inadequate lateral support of the fuel bundles due to loading a cell without a control rod.

c. To prevent excessive reactivity from being loaded into a fuel cell due to a control rod being withdrawn.

d. To prevent improper seating of the fuel bundle in the fuel support piece due to a lack of lateral guidance.

QUESTION: 061 (1.00)

The Offgas High Radiation alarm for Unit 2 has just annunciated.

In addition to a fuel element failure, which one of the following could cause the high offgas radiation condition?

a. Condensate demineralizer post strainer failure.

b. Failure to achieve recombination in the recombiner.

c. Trip of the operating Steam Jet Air Ejector.

d. Increased off gas dilution steam flow.

QUESTION: 062 (1.00)

Which ONE of the following correctly describes the responsibilities of the Acting Station Director in accordance with Dresden procedures?

a. Classify the emergency action level, make notifications to state, federal, and station personnel, and determine initial Protective Action Recommendations.

b. Classify the emergency action level, notify the Operations Duty Supervisor and the NRC, and determine the Offsite Dose Rate.

c. Notify state, federal, and station personnel, determine initial Protective Action Recommendations, and turnover to the Operations Director when he arrives.

d. Classify the emergency action level, notify the NRC and Corporate Command Center, and determine the initial Offsite Dose Rate.

QUESTION: 063 (1.00)

Unit 3 is operating at 98% rated power when the Chimney Isolation Valve AUTOMATICALLY CLOSES.

Which one of the following conditions will result in the closure of the Chimney Isolation Valve?

a. ONE main steam line radiation monitor is alarming high and ONE offgas radiation monitor is alarming high for 15 minutes.

b. ONE main steam line radiation monitor is alarming high for 15 minutes and ONE main steam line radiation monitor is alarming downscale.

c. ONE offgas radiation monitor is alarming downscale and ONE offgas radiation monitor is alarming high-high for 15 minutes.

d. ONE main steam line radiation monitor is alarming high-high and ONE offgas radiation monitor is alarming high-high for 15 minutes.

QUESTION: 064 (1.00)

Unit 3 has experienced a transient with a failure to scram and Standby Liquid Control (SBLC) has been initiated.

Select the reason that DEOP 400-5, Failure to Scram, directs the operator to terminate boron injection when the SBLC tank level decreases to 27 percent.

a. The hot shutdown boron weight has been injected.

b. The cold shutdown boron weight has been injected.

c. Cavitation of the SBLC pumps will be prevented.

d. A positive temperature coefficient will be prevented.

QUESTION: 065 (1.00)

Which ONE of the following reactor recirculation flow control failures would result in the MOST SEVERE inadvertent reactivity addition transient if the reactor is initially at 50% rated power?
(Assume no operator action.)

a. A one (1) percent per minute speed increase of both pumps.

b. A speed increase of both pumps at the maximum rate of pump speed increase.

c. A speed increase of one (1) pump at one (1) percent per minute.

d. A speed increase of one (1) pump at the maximum rate of pump speed increase.

QUESTION: 066 (1.00)

Which ONE of the following statements correctly describes the protective function provided by the Safety Relief Valves (SRVs) and the basis for requiring the SRVs be operable, per Technical Specification 3.6.E, for power operation?

a. To prevent exceeding the reactor vessel design pressure of 1250 psig to protect the reactor vessel from brittle failure.

b. To prevent exceeding the recirculation suction piping design pressure of 1175 psig and protect the piping from ductile failure.

c. To limit the maximum pressure exerted on the reactor vessel to 1375 psig to protect the reactor pressure vessel.

d. To limit the maximum reactor vessel bottom head pressure to 1410 psig to protect the reactor recirculation suction piping.

QUESTION: 067 (1.00)

Unit 3 is operating at 75% rated power with EHC pressure controller "A" controlling reactor pressure.
Which ONE of the following correctly describes the INITIAL plant response to an UPSCALE failure of the EHC pressure setpoint controller.

a. All control valves close and the bypass valves remain closed.

b. All control valves close and the bypass valves fully open.

c. All control valves fully open and the bypass valves remain closed.

d. All control valves and the bypass valves go fully open.

QUESTION: 068 (1.00)

An unisolable reactor coolant leak on Unit 2 has resulted in a reactor scram and a rapid increase in drywell pressure. The Shift Supervisor has just entered the DEOPs to take action to mitigate the leak. Plant conditions are as follows:

- All rods are inserted
- Drywell pressure = 9 psig increasing
- All automatic plant functions have performed properly
- HPCI is maintaining reactor level at 0 inches

Select the correct action that the Shift Supervisor should direct in order to control drywell pressure in accordance with the DEOPs.

a. Initiate venting with SBGT.

b. Initiate torus sprays.

c. Initiate drywell sprays.

d. Initiate torus and drywell sprays.

QUESTION: 069 (1.00)

A transient on Unit 2 has resulted in a rupture of the torus causing torus level to decrease. Plant conditions are as follows:

- Torus level = 7.0 feet, steady
- Torus bottom pressure = 3.5 psig
- Torus water temperature = 145 deg F

Which ONE of the following statements correctly describes the effect that this Torus water level has on the operation of ECCS pumps for reactor water level control.

a. Discontinue operation of the LPCI or the Core Spray pumps to prevent cavitation on low suction pressure.

b. Continued operation of HPCI is allowed if the suction is aligned to the CST to provide adequate suction pressure.

c. Total LPCI system flow must be limited to 20000 gpm with four pumps operating to ensure adequate NPSH.

d. Total Core Spray system flow must be limited to 10000 gpm with two pumps operating to ensure adequate NPSH.

QUESTION: 070 (1.00)

A transient on Unit 2 has resulted in a significant decrease in reactor water level and level cannot be maintained above -143 inches.

Select the basis for the direction by DEOP 100, Reactor Control, to initiate Isolation Condensing.

a. To increase reactor level with low pressure ECCS.

b. To commence a reactor cooldown by removing decay heat.

c. To provide additional water for submerging the core.

d. To establish core cooling by natural circulation.

QUESTION: 071 (1.00)

An accident on Unit 2 has resulted in a complete loss of reactor water injection systems. Reactor water level is -155 inches and decreasing.

Which ONE of the following correctly describes plant conditions that provide adequate cooling of the core.

a. Isolation condenser operating or at least one ADS valve open if reactor pressure is less than 120 psig.

b. Open all available ADS valves when reactor level drops to less than -143 inches.

c. Isolation condenser operating and all ADS valves placed in AUTO if reactor water level is less than -185 inches.

d. Isolation condenser out of service and all ADS valves are placed in AUTO if reactor pressure is greater than 120 psig.

QUESTION: 072 (1.00)

A reactor scram signal was received on Unit 3 with a failure of all rods to insert. DEOP 400-5, Failure to Scram, directs the operators to "maintain RPV water level between -143 inches and +48 inches" using Condensate/Feed, HPCI, CRD, or LPCI systems.

Select the correct reason, for using the Condensate/Feed, HPCI, and LPCI systems for reactor level control.

a. Each takes a suction on a high quality water source.

b. Each provides a high pressure injection source.

c. Each provides a high volume injection source.

d. Each injects water into the reactor vessel downcomer.

QUESTION: 073 (1.00)

During an ATWS on Unit 3, operators are unable to maintain reactor water level above -143 inches. DEOP 400-5, Failure to Scram, directs the operators to "maintain RPV water level between -173 inches and the level to which it was lowered."

If level cannot be maintained above -173 inches, DEOP 400-5, Failure to Scram, directs Emergency Depressurization of the reactor vessel because this is the lowest reactor level that:

a. will generate sufficient steam to maintain the uncovered clad below 1500 deg F.

b. will maintain the peak fuel centerline temperature of any fuel pin below 2200 deg F.

c. can be maintained without noticeable reactor power and level oscillations occurring.

d. can provide any steam generation in the covered portion of the core for steam cooling of the uncovered fuel.

QUESTION: 074 (1.00)

During an Anticipated Transient Without a Scram on Unit 3, operators have lowered level to -140 inches. When the SBLC tank level has decreased to 35%, operators commence raising reactor water level per DEOP 400-5, Failure to Scram. While increasing reactor water level plant conditions are as follows:

- operators are increasing reactor water level with reactor feed pumps
- reactor pressure = 920 psig and constant
- reactor power is steadily increasing on IRMs

Select the reason that reactor power increased when reactor water level was raised.

a. Insufficient boron has been injected into the vessel to maintain shutdown conditions in reactor.

b. Uneven boron mixing in the vessel has prevented sufficient boron from reaching the core area.

c. The Hot Shutdown Boron weight is insufficient to keep the reactor shutdown when vessel level is increased.

d. The water injected into the vessel flushed some of the boron from the core area.

QUESTION: 075 (1.00)

Which ONE of the following explains why DEOP 300-2, Radioactive Release Control, directs the operator to restart the Turbine Building Ventilation, if it is shutdown?

a. to filter the air in the turbine building before release to the environment.

b. to prevent an unmonitored ground level release of radioactivity.

c. to maintain a positive pressure inside the turbine building.

d. to reduce the turbine building area and equipment temperatures.

QUESTION: 076 (1.00)

The reactor is in the process of being placed into cold shutdown following 85 days of continuous power operation when a complete loss of the Shutdown Cooling System occurs.

Which ONE of the following considerations should the Shift Supervisor use to prioritize the alternative methods of decay heat removal, directed by DOA 1000-1, Residual Heat Removal Alternatives?

a. heat capacity

b. reactor makeup capacity

c. reactor water chemistry impact

d. environmental impact

QUESTION: 077 (1.00)

Unit 2 is operating at 100% rated thermal power, when the operator recognizes that main condenser vacuum is decreasing at approximately 1 inch Hg absolute every 2 minutes.

DOA 3300-2, Loss of Main Condenser Vacuum, directs the operator to reduce reactor power in order to:

a. stabilize steam jet air ejector (SJAE) flow.

b. allow placing the standby SJAE in service.

c. allow bypassing the off gas recombiner and the charcoal adsorbers.

d. lower steam pressure and reset the SJAE steam supply relief valve.

QUESTION: 078 (1.00)

Unit 2 is operating at 100% rated thermal power when reactor recirculation pump A trips.

The immediate operator action is to reduce reactor recirculation pump B speed to:

a. 80%, to allow inserting rods to get below the 80% flow control line.

b. 59%, to allow a restart attempt of reactor recirculation pump A.

c. 42%, to reduce the jet pump riser vibration during single loop operation.

d. 28%, to prevent inducing excessive thermal stress on the reactor vessel lower head.

QUESTION: 079 (1.00)

A Loss of Coolant Accident has occurred. The reactor has scrammed and LPCI is injecting into the reactor vessel. Plant indications are as follows:

- Drywell temperature recorder 3-1340-1
  - Point 9 = 310 deg F
  - Point 10 = 305 deg F
- Drywell pressure = 45 psig
- Reactor pressure = 100 psig
- Reactor water level indicators
  - Fuel Zone A = -70 inches
  - Fuel Zone B = -72 inches
  - Wide Range = -50 inches
  - Medium Range = -58 inches
  - Narrow Range A = 0 inches
  - Narrow Range B = 0 inches

Select the correct diagnosis of the reactor water level indications.

a. Reactor water level cannot be determined because the flow through the core from the LPCI injection rate will result in level indicator error.

b. Reactor water level cannot be determined because the Reactor Pressure Vessel Saturation Pressure limit has been exceeded.

c. Reactor water level is about -72 inches because the Fuel Zone indicators are above their minimum useable indicating level.

d. Reactor water level is between -50 inches and -58 inches because the wide and medium range indicators agree and are onscale.

QUESTION: 080 (1.00)

DEOP 300-1, Secondary Containment Control, is entered when a Reactor Building area radiation exceeds its maximum normal value in any area because this area radiation level is an indication:

a. that an uncontrolled release of radioactivity to the environment is occurring.

b. that a direct challenge to the structural integrity of the secondary containment exists.

c. of a failure of the Reactor Building ventilation system to properly isolate.

d. of the impact that a breach of secondary containment would have on the environment.

QUESTION: 081 (1.00)

During a plant transient on Unit 3, the Shift Supervisor enters DEOP 300-1, Secondary Containment Control. Plant conditions are as follows:

- Reactor power = 80% by APRMs
- Reactor Building East Corner Room = 8 inches increasing
- Reactor Building West Corner Room = 0 inches
- HPCI area temperature = 205 deg F increasing rapidly
- HPCI cubicle area radiation = 50 mr/hr increasing slowly
- Alarm "HPCI AUTO ISOLATION INITIATED" is annunciating
- HPCI inboard isolation valve 3-2301-4 indicates open
- HPCI outboard isolation valve 3-2301-5 indicates closed

Select the proper corrective action that the Shift Supervisor is required to direct.

a. Isolate all systems discharging into the HPCI area and execute DGP 2-1, Normal Unit Shutdown.

b. Attempt to isolate all systems discharging into the HPCI area and execute DEOP 400-1, RPV Flooding.

c. Initiate a reactor scram and execute DEOP 400-2, Emergency Depressurize the RPV.

d. Initiate a reactor scram and execute DEOP 100, RPV Control.

QUESTION: 082 (1.00)

Unit 2 is operating at 100% rated power when a complete loss of RBCCW occurs. The operator begins a reactor power reduction.

MATCH the plant conditions in Column A with the required immediate operator actions in Column B. (NOTE: Each response in Column B may be utilized only once, and only a single answer may occupy one answer space.)
(4 required at 0.25 each)

COLUMN A (PLANT CONDITION)	COLUMN B (OPERATOR ACTION)
_____ a. one minute has passed and RBCCW is not restored	1. enter DGP-2, Normal Unit Shutdown
_____ b. plant equipment damage is imminent	2. manually scram the reactor
_____ c. Drywell pressure is 2.1 psig	3. enter DOA 500-1, Inadvertent Entry into Unstable Power to Flow Region
_____ d. core flow has decreased to 48 x 10EE6 lbm/hr	4. cease reactor recirculation pump speed decreases
	5. enter DEOP 200, Primary Containment Control
	6. trip reactor recirculation pumps
	7. trip the Drywell Coolers
	8. trip RWCU pumps

QUESTION: 083 (1.00)

Select the correct Unit 2 plant response to a complete loss of instrument air pressure.

a. Level in the main condenser hotwell will increase due to MAKEUP valve failing OPEN and REJECT valve failing CLOSED.

b. SBGT system discharge flow rate could exceed its Technical Specification flow limit since the FLOW CONTROL VALVES will fail OPEN.

c. Reactor Recirculation Motor Generator oil coolers will overheat due to service water TEMPERATURE CONTROL VALVES to the oil coolers failing CLOSED.

d. The reactor will scram on high reactor pressure or high reactor flux due to all the INBOARD MSIVS failing fully CLOSED.

QUESTION: 084 (1.00)

Unit 2 is operating at 25% rated power when a main turbine trip occurs.

Select the correct IMMEDIATE operator action if the operator identifies that the turbine speed is increasing and the Main Stop Valves (MSVs) are OPEN.

a. Manually trip the main turbine and close the MSVs.

b. Open both main generator output circuit breakers.

c. Verify the main generator trips on reverse power after 3 seconds.

d. Initiate a reactor scram and close the MSIVs.

QUESTION: 085 (1.00)

Unit 2 is operating at 100% rated power when all station 125 VDC systems are lost due to a Battery ground.

Select the correct plant response.

a. The LPCI pump motor breakers will lose control power but can be operated manually from inside the local breaker cubicle.

b. The Core Spray automatic initiation logic will be disabled but the system can be manually initiated from the Control Room.

c. The ADS automatic initiation logic will lose power resulting in an automatic depressurization of the reactor pressure vessel.

d. The Emergency Diesel Generator initiation logic will be disabled but the diesels can be started manually from the Control Room.

QUESTION: 086 (1.00)

Unit 3 is operating at 60% rated power with CRD pump A tagged out of service for maintenance. A trip of CRD pump B results in EIGHT (8) control rod "ACCUMULATOR TROUBLE" alarms.

Why does DOA 300-1, Control Rod Drive System Failure, direct the operator to immediately scram the reactor?

a. To prevent reactor coolant back leakage into the CRD hydraulic accumulators causing Reactor Building high area radiation conditions.

b. To ensure a reactor scram can be accomplished within the maximum scram time since rod insertion will be slower at lower accumulator pressures.

c. To ensure sufficient control rods can be fully inserted into the core to shutdown the reactor since a generic CRD problem is indicated.

d. To prevent control rods from failing to fully insert on a scram signal due to inadequate accumulator pressures to drive the control rods in.

QUESTION: 087 (1.00)

Unit 3 is operating at 100% rated power when a trip of BOTH Reactor Recirculation pumps occurs.

Which ONE of the following plant responses would require the operator to immediately scram the reactor?

a. Five (5) APRMs are oscillating on a 10 second period with a peak-to-peak amplitude of three (3) percent.

b. Multiple LPRMs near the center of the core are alarming upscale on a 10 second period.

c. Multiple LPRMs are oscillating between the upscale and downscale alarms on a three (3) second period.

d. Three (3) APRMs are oscillating three (3) percent above and below the upscale alarm every three (3) seconds.

QUESTION: 088 (1.00)

A malfunction of the Reactor Feedwater Level Controller has resulted in an INCREASING reactor water level on Unit 2.

The Reactor Feedwater Pumps are automatically tripped on a high reactor water level signal to prevent:

a. feed pump damage due to increasing pump discharge flow rate and head.

b. reactor vessel damage due to completely filling and overpressurizing the vessel.

c. main steam line piping and hanger damage due to filling the main steam lines.

d. HPCI turbine damage due to moisture carryover into the turbines.

QUESTION: 089 (1.00)

A transient on Unit 3 has resulted in a release of radioactive contaminants to the Reactor Building. Plant conditions are as follows:

- Reactor Building Ventilation Exhaust Radiation = 7 mr/hr
- Reactor Building to atmosphere differential pressure has increased to +0.2 inches of water, and is steady
- Isolation condenser area temperature = 165 deg F increasing
- Other Reactor Building temperatures are near normal

Select the correct diagnosis of plant equipment and system operation for these conditions.

a. Standby Gas Treatment system has started and is operating properly.

b. Reactor Building Ventilation fans tripped but the system failed to isolate.

c. Reactor Building Blow-out panels have been blown out to relieve building pressure.

d. One of the Torus to Reactor Building Vacuum breakers has failed in the open position.

QUESTION: 090 (1.00)

Which ONE of the following explains why DEOP 400-4, Primary Containment Flooding, directs the operator to vent the reactor pressure vessel when primary containment water level reaches 25 feet?

a. To prevent exceeding the primary containment design pressure due to the compression of the containment air space.

b. To reduce the pressure exerted on the bottom of the Torus structure due to the height of water plus the containment air pressure.

c. To prevent developing a higher pressure inside the reactor pressure vessel than exists in the containment due to trapped steam.

d. To ensure that the reactor vessel is vented before the reactor vent lines are submerged by water in the containment.

QUESTION: 091 (1.00)

Match the instrumentation scrams in Column A with the Technical Specification basis provided in Column B. (NOTE: Each response in Column B may be utilized only once, and only a single answer may occupy one answer space.) (0.25 ea.)

	COLUMN A (SCRAMS)		COLUMN B (BASIS)
_____	a. MSIV 10% closure	1.	prevent exceeding MCPR Safety Limit
_____	b. Main steam line high radiation	2.	prevent exceeding LHGR Thermal Limit
_____	c. Drywell pressure	3.	reduce reactor vessel pressure transient
_____	d. APRM high flux in Startup Mode	4.	reduce reactor vessel level transient
		5.	backup the low reactor level scram
		6.	isolate radioactive releases from the environment
		7.	reduce radioactive contamination of the main turbine

QUESTION: 092 (1.00)

Diesel generator number 2 for Unit 2 is being run for an operability surveillance when Bus 24-1 normal supply breaker from Bus 24 trips open and cannot be reclosed. Plant conditions are as follows:

- Reactor is operating at 100% rated power
- Maintenance estimates repair of the normal supply breaker will take at least 12 hours
- LPCI pump 2D is tagged out and is expected to be out of service for maintenance for at least 2 more days
- All Offsite power lines are available
- Diesel number 2 is running normally and supplying Bus 24-1

Which ONE of the following describes the Technical Specification actions that the Shift Supervisor must direct?

a. Reactor operation is permissible for the next 7 days because only one offsite power line can be connected to Unit 2.

b. Reactor operation is permissible for the next 30 days because only one of the LPCI system pumps is inoperable.

c. Be in Hot Shutdown in 12 hours and Cold Shutdown in the following 24 hours because the normal power supply to Bus 24-1 is inoperable.

d. Reactor operation is permissible for the next 7 days because both LPCI system 2 pumps are inoperable.

QUESTION: 093 (1.00)

A small LOCA has occurred on Unit 2 and the Shift Engineer has entered DEOP 100 due to low water level conditions. Plant conditions are as follows:

- The condensate pumps have tripped on low hotwell level
- Reactor pressure = 500 psig and steady
- Drywell temperature = 180 deg F and steady

Reactor water level is being maintained at - 55 inches using HPCI when the operator reports the following reactor water level indications.

- Fuel Zone Level Indicator "B" = -339 inches
- Fuel Zone Level Indicator "A" = + 45 inches
- Both Medium Range Level indicators = -60 inches
- Both Narrow Range Level indicators = 0 inches
- Wide Range Level Indicator = -60 inches

Which ONE of the following correctly describes the action that the Shift Engineer must direct per the DEOPs?

a. Inhibit ADS, initiate Isolation Condenser, and increase injection flow using HPCI.

b. Reduce reactor pressure as necessary to maximize injection into the RPV using LPCI and Core Spray.

c. Emergency depressurize and inject to the RPV using LPCI, Core Sray, and CRD.

d. Refer to Detail 100-A to determine that only Fuel Zone Level Indicator "A" may be used to trend reactor level.

QUESTION: 094 (1.00)

DEOP 200-2, Primary Containment Hydrogen Control, directs the operator to maintain a hydrogen concentration less than 6% and an oxygen concentration less than 5% to prevent _____.

a. a detonation

b. a deflagration

c. an explosion

d. an implosion

QUESTION: 095 (1.00)

DEOP 200-2, Primary Containment Hydrogen Control, directs the operators to initiate torus sprays when hydrogen and oxygen concentrations are above 6% and 5%, respectively.

Select the reasons for initiating torus sprays from the following:

1. to scrub the radioactive gases before venting to the environment
2. to suppress the pressure increase of a hydrogen-oxygen combustion
3. to prevent containment pressure from exceeding design pressure
4. to reduce the flammability of the combustible gases in the torus

a. 1, 2, 3

b. 2, 3, 4

c. 1, 3, 4

d. 1, 2, 4

QUESTION: 096 (1.00)

Unit 2 is operating at 100% rated power when a spurious scram on RPS Channel A occurs. The operator observes the following:

- the indicating lights for scram solenoid groups A1, A2, and A3 are EXTINGUISHED
- the indicating lights for scram solenoid group A4 is ILLUMINATED.

Select the percentage of control rods that will insert into the core if the operator inadvertently depresses the RPS Channel B manual scram button while implementing DOA 0500-2, Partial 1/2 or Full Scram Actuation?

a. 100%

b. 75%

c. 50%

d. 25%

QUESTION: 097 (1.00)

Unit 2 is operating at 75% rated power when a failure of the feedwater level controller results in an increasing reactor water level.

Select the methods that the operator can use to control reactor level in accordance with DOA 600-1, Transient Level Control, from the following:

1. Manually position the FRV.
2. Throttle flow with the FRV isolation valves.
3. Adjust reactor power with control rods.
4. Start and stop a reactor feed pump.

a. 1, 2, 3

b. 2, 3, 4

c. 1, 3, 4

d. 1, 2, 4

QUESTION: 098 (1.00)

Unit 3 is operating at 100% rated power.

Select the condition that requires the operators to immediately isolate the Isolation Condenser (IC).

a. IC vent radiation level is 1 mr/hr.

b. IC vent radiation level is 7 mr/hr.

c. IC shell side water level is 7 feet 2 inches.

d. IC shell side water level is 4 feet 8 inches.

QUESTION: 099 (1.00)

Unit 2 is operating at 100% rated power when multiple Feed Regulating Station high vibration alarms are received and feedwater flow oscillations are observed.

DOA 3200-1, Feedwater System High Vibration, directs the operator to maintain feedwater flow for not longer than _____ seconds to restore reactor level above _____ inches.

a. 15, +15

b. 15, 0

c. 60, +15

d. 60, 0

(********** END OF EXAMINATION **********)

A N S W E R S H E E T

Multiple Choice (Circle or X your choice)

If you change your answer, write your selection in the blank.

001	a	b	c	d	_____
002	a	b	c	d	_____
003	a	b	c	d	_____
004	a	b	c	d	_____
005	a	b	c	d	_____
006	a	b	c	d	_____
007	a	b	c	d	_____
008	a	b	c	d	_____
009	a	b	c	d	_____

010 *Fill* in the blank

a _____

b _____

011	a	b	c	d	_____
012	a	b	c	d	_____
013	a	b	c	d	_____
014	a	b	c	d	_____
015	a	b	c	d	_____
016	a	b	c	d	_____
017	a	b	c	d	_____
018	a	b	c	d	_____
019	a	b	c	d	_____

020 match with selected number in the blank

a _____

b _____

c _____

SENIOR REACTOR OPERATOR

A N S W E R S H E E T

Multiple Choice (Circle or X your choice)

If you change your answer, write your selection in the blank.

d _____

021	a	b	c	d	_____
022	a	b	c	d	_____
023	a	b	c	d	_____
024	a	b	c	d	_____
025	a	b	c	d	_____
026	a	b	c	d	_____
027	a	b	c	d	_____
028	a	b	c	d	_____
029	a	b	c	d	_____
030	a	b	c	d	_____
031	a	b	c	d	_____
032	a	b	c	d	_____
033	a	b	c	d	_____
034	a	b	c	d	_____
035	a	b	c	d	_____
036	a	b	c	d	_____

037 match with selected number in the blank

a _____

b _____

c _____

d _____

038	a	b	c	d	_____
039	a	b	c	d	_____
040	a	b	c	d	_____

A N S W E R S H E E T

Multiple Choice (Circle or X your choice)

If you change your answer, write your selection in the blank.

041 a b c d _____

042 a b c d _____

043 a b c d _____

044 a b c d _____

045 match with selected number in the blank

a _____

b _____

c _____

d _____

e _____

f _____

g _____

h _____

i _____

j _____

046 a b c d _____

047 match with selected number in the blank

a _____

b _____

c _____

d _____

048 a b c d _____

049 a b c d _____

050 a b c d _____

051 a b c d _____

A N S W E R S H E E T

Multiple Choice (Circle or X your choice)

If you change your answer, write your selection in the blank.

052 a b c d _____

053 match with selected number in the blank

a _____

b _____

c _____

d _____

054 a b c d _____

055 a b c d _____

056 a b c d _____

057 a b c d _____

058 a b c d _____

059 a b c d _____

060 a b c d _____

061 a b c d _____

062 a b c d _____

063 a b c d _____

064 a b c d _____

065 a b c d _____

066 a b c d _____

067 a b c d _____

068 a b c d _____

069 a b c d _____

070 a b c d _____

071 a b c d _____

072 a b c d _____

A N S W E R S H E E T

Multiple Choice (Circle or X your choice)

If you change your answer, write your selection in the blank.

073	a	b	c	d	_____
074	a	b	c	d	_____
075	a	b	c	d	_____
076	a	b	c	d	_____
077	a	b	c	d	_____
078	a	b	c	d	_____
079	a	b	c	d	_____
080	a	b	c	d	_____
081	a	b	c	d	_____

082 match with selected number in the blank

a _____

b _____

c _____

d _____

083	a	b	c	d	_____
084	a	b	c	d	_____
085	a	b	c	d	_____
086	a	b	c	d	_____
087	a	b	c	d	_____
088	a	b	c	d	_____
089	a	b	c	d	_____
090	a	b	c	d	_____

091 match with selected number in the blank

a _____

b _____

A N S W E R S H E E T

Multiple Choice (Circle or X your choice)

If you change your answer, write your selection in the blank.

c _____

d _____

092	a	b	c	d	_____
093	a	b	c	d	_____
094	a	b	c	d	_____
095	a	b	c	d	_____
096	a	b	c	d	_____
097	a	b	c	d	_____
098	a	b	c	d	_____
099	a	b	c	d	_____

(********** END OF EXAMINATION **********)

ANSWER: 001 (1.00)

a.

REFERENCE:

Lesson Plan, DEOP Failure to Scram 400-5, Section II.C.6, Objective 16

KA 295006K306 3.2/3.3

295006K306 ..(KA's)

ANSWER: 002 (1.00)

b.

REFERENCE:

DEOP 100, Reactor Control
DGA 12, Partial or Complete Loss of AC Power, pp 2

KA 295003A103 4.4/4.4 295003K205 3.8/4.0 295003G012 3.4/4.2

295003A103 ..(KA's)

ANSWER: 003 (1.00)

d.

REFERENCE:

Lesson Plan, DEOP Reactor Control, Section II.D.6.e, Objective 4.c
DEOP 100, Reactor Control, Fig 100-F

KA 295026K101 3.0/3.4

295026K101 ..(KA's)

ANSWER: 004 (1.00)

c.

REFERENCE:

DFP 800-1, Master Refueling Procedure, pp 3.

KA 295023G010 3.8/3.9

295023G010 ..(KA's)

ANSWER: 005 (1.00)

d.

REFERENCE:

Print M-26
Lesson Plan, Nuclear Boiler Instrumentation, Figure 3, Objective 11
DOA 6800-1, pp 6 & 8

KA 295003A202 4.2/4.3

295003A202 295003A202 295003A202 ..(KA's)

ANSWER: 006 (1.00)

c

REFERENCE:

DAP 7-11, Drywell Entry pp 6
KA 294001K113 3.2/3.6

294001K113 ..(KA's)

ANSWER: 007 (1.00)

d

REFERENCE:

DOP 9900-7, Process Computer, Control Rod Positions (OD-7) pp 2
Process Computer Learning Objective #3
KA 294001A115 3.2/3.4

294001A115 ..(KA's)

ANSWER: 008 (1.00)

d

REFERENCE:

DAP 12-2, Station Radiological Control, pp3
KA 294001K103

294001K103 ..(KA's)

ANSWER: 009 (1.00)

d

REFERENCE:

DAP 9-13, Procedural Response to Abnormal Conditions. pp 5
KA 294001A109 3.3/4.2 KA 294001A111 3.3/4.3

294001A109 ..(KA's)

ANSWER: 010 (1.00)

a. 100 (0.5)

b. 12 (0.5)

REFERENCE:

Commonwealth Edison Co. Radiation Protection Standards pp 10 and 11
KA 294001K103 3.3/3.8

294001K103 ..(KA's)

ANSWER: 011 (1.00)

b

REFERENCE:

Dresden Technical Specification 3.6.c
KA 294001A114 2/9/3.4

294001A114 ..(KA's)

ANSWER: 012 (1.00)

a

REFERENCE:

DAP 7-4, Control of Temporary System Alterations. pp 4
KA 294001A107 3.0/3.7

294001A107 ..(KA's)

ANSWER: 013 (1.00)

d

REFERENCE:

DAP 7-11, Drywell Entry. pp 1
KA 294001K114 3.2/3.4

294001K114 ..(KA's)

ANSWER: 014 (1.00)

b

REFERENCE:

Commonwealth Edison Co. Radiation Protection Standards pp 33, 34
KA 294001A103 2.7/3.7

294001A103 ..(KA's)

ANSWER: 015 (1.00)

c

REFERENCE:

DAP 09-01 pp 11
KA 294001A101 3.7/3.7

294001A101 ..(KA's)

ANSWER: 016 (1.00)

c

REFERENCE:

DAP 7-21, Station Policy on Reactor Operator and Senior Reactor Operator Manning Levels and Overtime. pp 3
KA 294001A103 2.7/3.7 294001A109 3.3/4.2

294001A109 ..(KA's)

ANSWER: 017 (1.00)

d

REFERENCE:

DAP 7-27, Independent Verification. pp 1 and 2
KA 294001K101 3.7/3.7

294001K101 ..(KA's)

ANSWER: 018 (1.00)

b

REFERENCE:

DAP 2-8 Section B.1.g
KA 294001A106 3.4/3.6

294001A106 ..(KA's)

ANSWER: 019 (1.00)

c.

REFERENCE:

Dresden EPIP 200-T1 pp 11

KA 294001A116 2.9/4.7

294001A116 ..(KA's)

ANSWER: 020 (1.00)

a 4

b 3

c 5

d 3

REFERENCE:

Dresden Lesson Plan, Low Pressure Coolant Injection. Figure 8
KA 262001K302 3.8

262001K302 ..(KA's)

ANSWER: 021 (1.00)

d

REFERENCE:

Dresden Lesson Plan, AC Electrical Distribution Section 3.C.3
Learning Objective 11

KA 262002K401 3.1/3.4

262002K401 ..(KA's)

ANSWER: 022 (1.00)

d

REFERENCE:

Dresden Lesson Plan, AC Electrical Distribution Section D.2.c
Learning Objective 11
KA 262001K402 2.4/3/3 262001K101 3.8/4.3 262001K301 3.5/3.7
262001A103 2.9/3.1 262001A211 3.2/3.6

262001K402 ..(KA's)

ANSWER: 023 (1.00)

c

REFERENCE:

Dresden Lesson Plan, Off-Gas system Section 15.a
Learning Objective 4.h
KA 271000K406 2.7/2.9

271000K406 ..(KA's)

ANSWER: 024 (1.00)

d

REFERENCE:

Dresden Lesson Plan, Isolation Condenser. pp 16
Learning Objective #13
KA 207000K405 4.0/4/2
207000A101 3.7/3.8
207000A102 3.2/3.4
207000A201 4.2/4.5

207000K405 ..(KA's)

ANSWER: 025 (1.00)

b

REFERENCE:

Dresden Lesson Plan, High Pressure Coolant Injection. pp 20
Learning Objective 10.g
KA 206000K201

206000K201 ..(KA's)

ANSWER: 026 (1.00)

d

REFERENCE:

Dresden Lesson Plan, Nuclear Boiler Instrumentation pp 33
Learning Objective #1, 3, and 4
KA 202001K127 4.1/4.3
202001K414 4.0/4.1

202001K414 ..(KA's)

ANSWER: 027 (1.00)

a

REFERENCE:

Dresden Lesson Plan, Intermediate Range Monitor. pp 17
Learning Objective # 9
KA 215003K402 4.0/4.0
215003A204 3.7/3.8

215003K402 ..(KA's)

ANSWER: 028 (1.00)

c

REFERENCE:

Dresden Lesson Plan, Average Power Range Monitor. pp 7 and 8
Learning Objectives 5.b, 9, 10 and 11
KA 215005K104 3.6/3.6
215005K402 3.2/3.2
215005K603 3.1/3.3

215005K603 ..(KA's)

ANSWER: 029 (1.00)

a

SENIOR REACTOR OPERATOR

REFERENCE:

DGP 1-1. pp 14 caution
KA 256000A110 3.1/3.1
256000G010 3.1/2.9
256000A413 3.3/3.4
241000K102 3.9/4.1
241000K106 3.8/3.9
241000K127 3.1/3.1
241000K301 4.1/4.1

256000A110 ..(KA's)

ANSWER: 030 (1.00)

b

REFERENCE:

Dresden Lesson Plan, Control Rod Blade and Drive Mechanism. pp 23
Learning Objective #1 and 3
KA 201001K303 3.1/3.2
201001K405 3.6/3.6

201001K405 ..(KA's)

ANSWER: 031 (1.00)

d

REFERENCE:

Dresden Lesson Plan, Main Steam System. pp 8
KA 239001K125 3.5/3.5
239001K316 3.6/3.6

239001K125 ..(KA's)

ANSWER: 032 (1.00)

b

REFERENCE:

Dresden Lesson Plan, Rod Block Monitor. pp 8 and 9
Learning Objective 5.b
KA 215002K102 3.2/3.1
215002K401 3.4/3.5
215002A304 3.6/3.5
215002G004 3.3/3.4

215002K102 ..(KA's)

ANSWER: 033 (1.00)

d

REFERENCE:

Dresden Lesson Plan, Traversing Incore Probe. pp 24
Learning Objective 2.d, 6, 7, and 8
KA 215001K401 3.4/3.5
215001K604 3.1/3.4

215001K401 ..(KA's)

ANSWER: 034 (1.00)

b

REFERENCE:

Dresden Lesson Plan, Standby Liquid Control System. pp 13
Learning Objective #3
KA 211000A104 3.6/3.7
211000A206 3.1/3.3

211000A104 ..(KA's)

ANSWER: 035 (1.00)

d

REFERENCE:

Dresden Lesson Plan, Standby Liquid Control. pp 19
Learning Objective # 1
KA 211000K301 4.3/4.4

211000K301 ..(KA's)

ANSWER: 036 (1.00)

d

REFERENCE:

Dresden Lesson Plan Rod Worth Minimizer. pp 5
Learning Objective #1
KA 201006K104 3.1/3.2
201006K404 3.4/3.5
201006K502 2.9/3.0
201006G001 3.5/3.8

201006K104 ..(KA's)

ANSWER: 037 (1.00)

a. 3

b. 5, 7

c. 1

d. 8 (5 required at 0.25 each)

REFERENCE:

Dresden Lesson Plan, Reactor Manual Control and RPIS System. pp 4
Learning Objective 2.b
KA 201002G008 3.6/3.4

201002G008 ..(KA's)

ANSWER: 038 (1.00)

d

REFERENCE:

Dresden Lesson Plan Diesel Generators. pp 9 and 12
Learning Objectives #4 and 7
KA 264000K401 3.5/3.7
264000K402 4.0/4.2

264000K402 ..(KA's)

ANSWER: 039 (1.00)

c

REFERENCE:

Dresden Lesson Plan, Source Range Monitoring System. pp 19
Learning Objective 7.b and 9
KA 215004K401 3.7/3.7
215004A101 3.0/3.1
215004A404 3.2/3.2

215004K401 ..(KA's)

ANSWER: 040 (1.00)

a

REFERENCE:

Dresden Lesson Plan, Automatic Depressurization System. pp 6
Learning Objective 5
KA 218000K106 3.9/3.9
218000K403 3.8/4.0
218000K501 3.8/3.8

218000K501 ..(KA's)

ANSWER: 041 (1.00)

d

REFERENCE:

Dresden Lesson Plan, Feedwater Level Control System. pp 7
Learning Objective 10
KA 259002K106 3.0/3.1
259002K413 3.5/3.6
259002K601 3.2/3.2
259002A307 3.5/3.6

259002K413 ..(KA's)

ANSWER: 042 (1.00)

d

REFERENCE:

Dresden Lesson Plan, Secondary Containment. pp 5
Learning Objective 4.a
KA 290001K101 3.3/3.5
290001K104 3.7/3.9
290001K402 3.4/3.5

290001K402 ..(KA's)

ANSWER: 043 (1.00)

a

REFERENCE:

Dresden Lesson Plan,Recirculation Flow Control System. pp 29
Learning Objective 4.f and 4,g
KA 202002K112 3.7/3.9
202002K402 3.0/3.0
202002K405 3.1/3.4
202002A407 3.3/3.2

202002K112 ..(KA's)

ANSWER: 044 (1.00)

b

REFERENCE:

Dresden Lesson Plan, Main Turbine pp 9 and 10
Learning Objective 4.c
KA 245000A201
245000A205
245000A301
245000G007

245000G007 ..(KA's)

ANSWER: 045 (2.00)

a. ~~1~~ ~~a~~ 1.

b. ~~2~~ ~~e~~ 3

c. ~~3~~ ~~b~~ 2

d. ~~4~~ ~~e~~ 3

e. ~~5~~ ~~e~~ 5

f. ~~6~~ ~~f~~ 6

g. ~~7~~ ~~g~~ 7

h. ~~8~~ ~~e~~ 3

i. ~~9~~ ~~h~~ 8

j. ~~10~~ ~~d~~ 4 (10 required 0.20 each)

REFERENCE:

Dresden Lesson Plan, Reactor Protection System. Figure 7
Learning Objective 4.c and 7
KA 212000K108 3.0/3.1
212000K115 3.8/3.9
212000K408 4.2/4.2

212000K108 ..(KA's)

ANSWER: 046 (1.00)

d

REFERENCE:

Dresden Lesson Plan, Fuel Pool Cooling and Cleanup System. pp 7
KA 233000A202 3.1/3.3
233000G007 3.2/3.3

233000G007 ..(KA's)

ANSWER: 047 (1.00)

a 2

b 4

c 6

d 1 (4 required at 0.25 each)

REFERENCE:

Dresden Lesson Plan, Reactor Water Cleanup System. pp 18
Learning Objective #8
KA 204000K111 3.5/3.7
204000K404 3.5/3.6

204000K404 ..(KA's)

ANSWER: 048 (1.00)

c

REFERENCE:

Dresden Lesson Plan, Core Spray. pp 11
Learning Objective 5.b
KA 209001K404 3.0/3.2
209001A205 3.3/3.6
209001A306 3.6/3.5

209001A205 ..(KA's)

ANSWER: 049 (1.00)

d

REFERENCE:

Dresden Lesson Plan, Core Spray. pp 12
Learning Objective # 7
KA 209001K114 3.7/3.8
209001A301 3.6/3.6
209001A403 3.7/3.6

209001A301 ..(KA's)

ANSWER: 050 (1.00)

b

REFERENCE:

Dresden Lesson Plan, Low Pressure Coolant Injection. pp 20 and 21
Learning Objective # 13
KA 203000K410 3.9/4.1
203000K411 4.0/4.0
203000A307 4.2/4.6
203000G007 4.2/4.3

203000A307 ..(KA's)

ANSWER: 051 (1.00)

b.

REFERENCE:

Dresden Lesson Plan, Low Pressure Coolant Injection. pp 9
KA 203000K403 3.2/3.3
203000A209 3.3/3.4

203000K403 ..(KA's)

ANSWER: 052 (1.00)

c.

REFERENCE:

DOA 7500-1, SBGT Fan Trip
Lesson Plan, Containment Systems
Learning Objective 7.

KA 261000A302 3.2/3.1

261000A302 ..(KA's)

ANSWER: 053 (1.00)

a. 4

b. 6

c. 4, 5

d. 4, 5 (6 required at 0.17 each)

REFERENCE:

Dresden Lesson Plan, Fuel Handling and Refueling Equipment. pp 7 and 8
Learning Objective #2
KA 234000K502 3.1/3.7

234000K502 ..(KA's)

ANSWER: 054 (1.00)

c.

REFERENCE:

Lesson Plan, RMCS and RPIS System pp 10 and 11
Objective 4

KA 201002A201 2.7/2.8

201002A201 ..(KA's)

ANSWER: 055 (1.00)

c

REFERENCE:

Dresden Lesson Plans, Secondary Containment System pp 8 and 9 and Primary Containment System. pp 7
Learning Objective # 2 and 3
KA 223001K406 3.1/3.3
223001K501 3.1/3.3

223001K406 ..(KA's)

ANSWER: 056 (1.00)

a.

REFERENCE:

Lesson Plan, DEOPs, RPV Flooding 400-1, Section II.A.6 and II.B.3, Objective 3

KA 295031A203 4.2/4.2 295031K202 3.8/3.9 295031K216 4.1/4.1

295031A203 ..(KA's)

ANSWER: 057 (1.00)

c.

REFERENCE:

Lesson Plan, DEOP, RPV Flooding 400-1, Section II.B.4&5,
Objective 7
DEOP 400-1, RPV Flooding

KA 295031K101 4.6/4.7 295031K216 4.1/4.1 295031A204 4.6/4.8
295031A201 4.6/4.6

295031K101 ..(KA's)

ANSWER: 058 (1.00)

a.

REFERENCE:

Lesson Plan, DEOP containment Control 200 Series, Section II.B.3&4
Tech Spec Bases pp 3/4.7-33&34.

KA 295013G004 3.0/4.1

295013G004 ..(KA's)

ANSWER: 059 (1.00)

c.

REFERENCE:

Lesson Plan, DEOP Failure to Scram 400-5, Section II.A.3,
Objective 4.

KA 295015K103 3.8/3.9

295015K103 ..(KA's)

ANSWER: 060 (1.00)

c.

REFERENCE:

Tech Spec Basis pp 3/4.10-9

KA 295023G004 2.7/3.88

295023G004 ..(KA's)

ANSWER: 061 (1.00)

a.

REFERENCE:

Lesson Plan, Offgas, Objective 11.
DGA-16, Coolant High Activity/Fuel Element Failure, pp 3

KA 295017A204 3.6/4.3 295017A201 2.9/4.2

295017A204 ..(KA's)

ANSWER: 062 (1.00)

a.

REFERENCE:

EPIP 100-1
KA 294001A116 2.9/4.7

294001A116 ..(KA's)

ANSWER: 063 (1.00)

c.

REFERENCE:

Lesson Plan, Offgas, pp 22, Objective 8
DGA-16, Coolant High Activity/Fuel Element Failure, pp 1

KA 295017K301 3.6/3.9 295017A102 3.5/3.7

295017K301 ..(KA's)

ANSWER: 064 (1.00)

b.

REFERENCE:

Lesson Plan, DEOP Failure to Scram 400-5, section II.C.9
DEOP 400-5

KA 295037A203 4.3/4.4 295037K204 4.4/4.5 295037A104 4.5/4.5

295037A203 ..(KA's)

ANSWER: 065 (1.00)

a.

REFERENCE:

Lesson Plan, Recirculation System, pp 53, Objective 12

KA 295014K211 3.6/3.7

295014K211 ..(KA's)

ANSWER: 066 (1.00)

c.

REFERENCE:

Tech. Specs. Bases pp 1/2.2-2 & 3/4.6-33

KA 295028G004 3.1/4.2 295028K301 4.2/4.3

295028G004 ..(KA's)

ANSWER: 067 (1.00)

a.

REFERENCE:

Lesson Plan, EHC Pressure Control and Logic System, Fig. 4

KA 295007K201 3.5/3.7

295007K201 ..(KA's)

ANSWER: 068 (1.00)

d.

REFERENCE:

Lesson Plan, DEOP Primary Containment Control, Section II.D.4&5, Objective 11

KA 295010G012 3.8/4.4

295010G012 ..(KA's)

ANSWER: 069 (1.00)

a.

REFERENCE:

Lesson Plan, DEOP Reactor Control series 100, Section II.D.6, Objective 4.b&c
DEOP 100, Reactor Control
DEOP 200-1, Primary Containment Control

KA 295030K204 3.7/3.8 295030K201 3.8/3.9 295030K203 3.8/3.9

295030K204 ..(KA's)

ANSWER: 070 (1.00)

c.

REFERENCE:

Lesson Plan, DEOP Reactor Control Series 100, Section II.E.2, Objective 11
DEOP 100, Reactor Control

KA 295031A109 3.3/3.5

295031A109 ..(KA's)

ANSWER: 071 (1.00)

d.

REFERENCE:

Lesson Plan, DEOP Steam Cooling Series 400-3, Section II.B, Objective 4

KA 295031G012 3.9/4.5 295031K208 4.2/4.3

295031G012 ..(KA's)

ANSWER: 072 (1.00)

d.

REFERENCE:

Lesson Plan, DEOP Failure to Scram Series 400-5, Section II.A.5, Objective 9
DEOP Failure to Scram

KA 295015G007 3.4/3.5

295015G007 ..(KA's)

ANSWER: 073 (1.00)

a.

REFERENCE:

Lesson Plan, DEOP Failure to Scram Series 400-5, Section II.A.6, Objective 2
DEOP 400-5, Failure to Scram

KA 295037K209 4.0/4.2 295037A202 4.1/4.2

295037K209 ..(KA's)

ANSWER: 074 (1.00)

b.

REFERENCE:

Lesson Plan, DEOP Failure to Scram 400-5, Section II.A.12, Objective 7, 10, 11
DEOP 400-5, Failure to Scram

KA 295037K104 3.4/3.6 295037K304 3.2/3.7

295037K104 ..(KA's)

ANSWER: 075 (1.00)

b.

REFERENCE:

Lesson Plan, DEOP 300-2, Radioactive Release Control, Section III.C.2, Objective 8

KA 295017K302 3.3/3.5

295017K302 ..(KA's)

ANSWER: 076 (1.00)

d.

REFERENCE:

DOA 1000-1, RHR Alternatives, pp 4
KA 295021A104 3.7/3.7

295021A104 ..(KA's)

ANSWER: 077 (1.00)

a.

REFERENCE:

DOA 3300-2 Loss of Condenser Vacuum, pp 1.

KA 295002K309 3.2/3.2

295002K309 ..(KA's)

ANSWER: 078 (1.00)

c.

REFERENCE:

DOA 202-1, Reactor Recirculation Pump Trip pp 1 and 4
KA 295001A101 3.5/3.6

295001A101 ..(KA's)

ANSWER: 079 (1.00)

c.

REFERENCE:

DEOP 200-1 Primary Containment Control Detail 200-1-A
Lesson Plan Nuclear Boiler Instrumentation pp 1-11, 19,
Objective 10

KA 295028A203 3.7/3.9 295028K203 3.6/3.8

295028A203 ..(KA's)

ANSWER: 080 (1.00)

d.

REFERENCE:

Lesson Plan, DEOP Secondary Containment Control Series 300,
Section I.A, Objective 1
DEOP 300-1

KA 295033K103 3.9/4.2

295033K103 ..(KA's)

ANSWER: 081 (1.00)

d.

REFERENCE:

Lesson Plan, Secondary Containment Control/300s, Objective 9
DEOP 300-1, Secondary Containment Control

KA 295036G012 3.5/3.9 295036A202 3.1/3.1

295036G012 ..(KA's)

ANSWER: 082 (1.00)

6 a.

2 b.

5 c.

4 d. (4 required at 0.25 ea.)

REFERENCE:

DOA 500-1, Inadvertent Entry into Unstable Power to Flow Region, pp 1
DOA 3700-1, Loss of Cooling by RBCCW, pp1

KA 295018G010 3.4/3.3 295018K101 3.5/3.6 295018K202 3.4/3.6

295018G010 ..(KA's)

ANSWER: 083 (1.00)

b.

REFERENCE:

Lesson Plan Instrument Air System, pp 20, Objective 10.
DOA 4700-1, Instrument Air System Failure, pp 4 and 5

KA 295019K212 3.3/4.4 295019K201 3.8/3.9 295019K205 3.4/3.4

295019K212 ..(KA's)

ANSWER: 084 (1.00)

d.

REFERENCE:

DOA 5600-1, Turbine Trip, pp 2

KA 295005G010 3.8/3.6

295005G010 ..(KA's)

ANSWER: 085 (1.00)

a.

REFERENCE:

Lesson Plan, Batteries,pp 4, Objective 7
DOA 6900-1, DC Electrical System Failure, pp 2

KA 295004A102 3.8/4.1

295004A102 ..(KA's)

ANSWER: 086 (1.00)

c.

REFERENCE:

Lesson Plan, CRDH System, Objective 15
DOA 300-1, CRD System Failure, pp 3
Technical Specification Basis pp 3/4.3-15

KA 295022K301 3.7/3.9

295022K301 ..(KA's)

ANSWER: 087 (1.00)

c.

REFERENCE:

DOA 500-1, Inadvertent Entry into Unstable Power to Flow Region, pp 1

KA 295001G010 3.8/3.7

295001G010 ..(KA's)

ANSWER: 088 (1.00)

c.

REFERENCE:

Lesson Plan, Feedwater and Condensate, pp 34, Objective 10

KA 295008K304 3.3/3.5

295008K304 ..(KA's)

ANSWER: 089 (1.00)

b.

REFERENCE:

Lesson Plan, DEOP Secondary Containment Series 300, Section II.A, Objective 1 and 2
DEOP 300-1, Secondary Containment Control

KA 295035K201 3.6/3.6 295035K202 3.6/3.8 295035K203 3.3/4.1
295035K204 3.3/3.7

295035K201 ..(KA's)

ANSWER: 090 (1.00)

c.

REFERENCE:

Lesson Plan, DEOP Primary Containment Flooding Series 400-4, Section II.C.3, Objective 2
DEOP 400-4, Primary Containment Flooding Series

KA 295029G007 3.6/3.9

295029G007 ..(KA's)

ANSWER: 091 (1.00)

3 a.

7 b.

5 c.

1 d. (4 required at 0.25 ea.)

REFERENCE:

Lesson Plan, APRMs, pp 11
Tech Spec Bases pp 3/4.1-12&13 and 3/4.2-29

KA 295006G004 3.3/4.2

295006G004 ..(KA's)

ANSWER: 092 (1.00)

b.

REFERENCE:

Lesson Plan, AC Electrical Power Distribution, pp 9,10, & 31
& Fig. 2, Objective 12
Tech Spec 3.0.B and 3.5.A.4

KA 295003G003 3.2/4.1

295003G003 ..(KA's)

ANSWER: 093 (1.00)

c.

REFERENCE:

Lesson Plan, EOP Introduction, Section IV, Objective 4
DEOP 100 and 400-1

KA 294001A102 4.2/4.2

294001A102 ..(KA's)

ANSWER: 094 (1.00)

b.

REFERENCE:

Lesson Plan, DEOP Primary Containment Control, Section II.E.4, Objective 18

KA 294001K115 3.4/3.8

294001K115 ..(KA's)

ANSWER: 095 (1.00)

d.

REFERENCE:

Lesson Plan
NRC GE EOPM, Emergency Operating Procedures Manual, pp A-4

KA 294001K115 3.4/3.8

295013G004 294001K115 ..(KA's)

ANSWER: 096 (1.00)

b.

REFERENCE:

DEOP 0500-2, Partial 1/2 or Full Scram Actuation, pp 2

KA 212000K106 3.5/3.6

212000K106 295006K306 ..(KA's)

ANSWER: 097 (1.00)

d.

REFERENCE:

DOA 600-1, Transient Level Control, pp 2

KA 259002G014 3.9/3.7

259002G014 295015K103 ..(KA's)

ANSWER: 098 (1.00)

b.

REFERENCE:

Lesson Plan, Isolation Condenser, pp 8.
DOA 1300-1, Isolation Condenser Tube Leak, pp 1

KA 207000G014 4.0/4.0

207000G014 295023G004 ..(KA's)

ANSWER: 099 (1.00)

c.

REFERENCE:

DEOP 3200-1, Feedwater System High Vibration, pp 1

KA 259001G014 3.7/3.5

259001G014 ..(KA's)

(********** END OF EXAMINATION **********)

QUESTION	VALUE	REFERENCE
001	1.00	14818
002	1.00	14868
003	1.00	16725
004	1.00	16726
005	1.00	17550
006	1.00	9000115
007	1.00	9000116
008	1.00	9000117
009	1.00	9000118
010	1.00	9000119
011	1.00	9000120
012	1.00	9000121
013	1.00	9000122
014	1.00	9000123
015	1.00	9000124
016	1.00	9000125
017	1.00	9000126
018	1.00	9000127
019	1.00	9000128
020	1.00	9000129
021	1.00	9000130
022	1.00	9000131
023	1.00	9000132
024	1.00	9000133
025	1.00	9000134
026	1.00	9000135
027	1.00	9000136
028	1.00	9000137
029	1.00	9000138
030	1.00	9000139
031	1.00	9000140
032	1.00	9000141
033	1.00	9000142
034	1.00	9000143
035	1.00	9000144
036	1.00	9000145
037	1.00	9000146
038	1.00	9000147
039	1.00	9000148
040	1.00	9000149
041	1.00	9000150
042	1.00	9000151
043	1.00	9000152
044	1.00	9000153
045	2.00	9000154
046	1.00	9000155
047	1.00	9000156
048	1.00	9000157
049	1.00	9000158
050	1.00	9000159
051	1.00	9000160
052	1.00	9000161
053	1.00	9000162
054	1.00	9000163

QUESTION	VALUE	REFERENCE
055	1.00	9000164
056	1.00	9000165
057	1.00	9000166
058	1.00	9000168
059	1.00	9000170
060	1.00	9000171
061	1.00	9000173
062	1.00	9000174
063	1.00	9000175
064	1.00	9000176
065	1.00	9000178
066	1.00	9000179
067	1.00	9000180
068	1.00	9000181
069	1.00	9000182
070	1.00	9000183
071	1.00	9000184
072	1.00	9000185
073	1.00	9000186
074	1.00	9000187
075	1.00	9000188
076	1.00	9000189
077	1.00	9000190
078	1.00	9000191
079	1.00	9000192
080	1.00	9000193
081	1.00	9000194
082	1.00	9000195
083	1.00	9000196
084	1.00	9000197
085	1.00	9000198
086	1.00	9000199
087	1.00	9000200
088	1.00	9000201
089	1.00	9000202
090	1.00	9000203
091	1.00	9000204
092	1.00	9000205
093	1.00	9000206
094	1.00	9000207
095	1.00	9000208
096	1.00	9000209
097	1.00	9000210
098	1.00	9000211
099	1.00	9000212

	100.00	

	100.00	

U. S. NUCLEAR REGULATORY COMMISSION
REACTOR OPERATOR LICENSE EXAMINATION
REGION 3

FACILITY: Dresden 2 & 3

REACTOR TYPE: BWR-GE3

DATE ADMINISTERED: 90/07/20

CANDIDATE:

INSTRUCTIONS TO CANDIDATE:

Points for each question are indicated in parentheses after the question. To pass this examination, you must achieve an overall grade of at least 80%. Examination papers will be picked up four and one half (4 1/2) hours after the examination starts.

NUMBER QUESTIONS	TOTAL POINTS	CANDIDATE'S POINTS	CANDIDATE'S OVERALL GRADE (%)
~~97~~ 93.00	~~101.00~~ 97.00		

All work done on this examination is my own. I have neither given nor received aid.

Candidate's Signature

MASTER COPY

NRC RULES AND GUIDELINES FOR LICENSE EXAMINATIONS

During the administration of this examination the following rules apply:

1. Cheating on the examination means an automatic denial of your application and could result in more severe penalties.

2. After the examination has been completed, you must sign the statement on the cover sheet indicating that the work is your own and you have not received or given assistance in completing the examination. This must be done after you complete the examination.

3. Restroom trips are to be limited and only one candidate at a time may leave. You must avoid all contacts with anyone outside the examination room to avoid even the appearance or possibility of cheating.

4. Use black ink or dark pencil only to facilitate legible reproductions.

5. Print your name in the blank provided in the upper right-hand corner of the examination cover sheet.

6. Fill in the date on the cover sheet of the examination (if necessary).

7. You may write your answers on the examination question page or on a separate sheet of paper. USE ONLY THE PAPER PROVIDED AND DO NOT WRITE ON THE BACK SIDE OF THE PAGE.

8. If you write your answers on the examination question page and you need more space to answer a specific question, use a separate sheet of the paper provided and insert it directly after the specific question. DO NOT WRITE ON THE BACK SIDE OF THE EXAMINATION QUESTION PAGE.

9. Print your name in the upper right-hand corner of the first page of answer sheets whether you use the examination question pages or separate sheets of paper. Initial each of the following answer pages.

10. Before you turn in your examination, consecutively number each answer sheet, including any additional pages inserted when writing your answers on the examination question page.

11. If you are using separate sheets, number each answer and skip at least 3 lines between answers to allow space for grading.

12. Write "Last Page" on the last answer sheet.

13. Use abbreviations only if they are commonly used in facility literature. Avoid using symbols such as < or > signs to avoid a simple transposition error resulting in an incorrect answer. Write it out.

14. The point value for each question is indicated in parentheses after the question. The amount of blank space on an examination question page is NOT an indication of the depth of answer required.

15. Show all calculations, methods, or assumptions used to obtain an answer.

16. Partial credit may be given. Therefore, ANSWER ALL PARTS OF THE QUESTION AND DO NOT LEAVE ANY ANSWER BLANK. NOTE: partial credit will NOT be given on multiple choice questions.

17. Proportional grading will be applied. Any additional wrong information that is provided may count against you. For example, if a question is worth one point and asks for four responses, each of which is worth 0.25 points, and you give five responses, each of your responses will be worth 0.20 points. If one of your five responses is incorrect, 0.20 will be deducted and your total credit for that question will be 0.80 instead of 1.00 even though you got the four correct answers.

18. If the intent of a question is unclear, ask questions of the examiner only.

19. When turning in your examination, assemble the completed examination with examination questions, examination aids and answer sheets. In addition, turn in all scrap paper.

20. To pass the examination, you must achieve an overall grade of 80% or greater.

21. There is a time limit of (4 1/2) hours for completion of the examination. (or some other time if less than the full examination is taken.)

22. When you are done and have turned in your examination, leave the examination area as defined by the examiner. If you are found in this area while the examination is still in progress, your license may be denied or revoked.

QUESTION: 001 (1.00)

During core alterations, at least __a__ IRM(s) must be in service in the core quadrant where refueling is taking place, and no more than __b__ of the four center IRM's may be bypassed.

QUESTION: 002 (1.00)

Upon a loss of ALL site AC power, reactor water level can be determined by the:

a. refuel level indicator on panel 902-4.

b. narrow range level indicators on panel 902-5.

c. medium range level indicators on panel 902-5.

d. fuel zone level indicators on panel 902-3.

QUESTION: 003 (1.00)

After a scram on Unit 2, an OD-7 for rod position is requested. Some of the rod positions are indicating "++".

Which ONE of the following statements represents the condition of the rods with a position indication of "++"?

a. These rods are fully inserted beyond the 00 notch position.

b. These rods are at notch 00, but are not indicating because the scram has not been reset.

c. These rods are at some unknown position in the core.

d. These rods are fully withdrawn (notch 48)

QUESTION: 004 (1.00)

What is the maximum Emergency Whole Body Dose Limit to enter an area to prevent conditions which would cause injury to other people?

a. 25 REM

b. 50 REM

c. 75 REM

d. 100 REM

QUESTION: 005 (1.00)

In response to Abnormal Conditions, Dresden procedures permit prolonged operation outside the Technical Specifications provided:

a. The Station Shift Engineer concurs that continued operation does not place the plant outside design conditions.

b. The Shift Technical Advisor (STA) or the Station Control Room Engineer, concurs that no license violation has occurred due to operating outside the Technical Specifications.

c. The Station Manager and the Nuclear Operations Duty Officer concur that continued operation is acceptable.

d. The NRC Operations Center concurs that continued operation has been properly justified based on present plant conditions .

QUESTION: 006 (1.00)

Which ONE of the following is the MAXIMUM reactor power level at which a Drywell entry can be performed?

a. 5%

b. 10%

c. 25%

d. 40%

QUESTION: 007 (2.00)

For each of the events listed in Column I, select the proper Control Room Log, if any, into which an entry would be made from the logs listed in Column II.
(Items in column II may be used more than once, or not at all)
(Items in Column I may have more than one answer)
9 (~~20~~ answers required at ~~0.20~~ 0.22 each)

COLUMN I	COLUMN II
_____a. HPCI has been declared inoperable due to failure of the pump seals.	1. Operators Control Room Log
	2. Engineers Log
_____b. A makeup demineralizer has been removed from service and the standby demineralizer placed in service.	3. Center Desk Log
	4. Degraded Equipment Log
_____c. A Diesel Generator initiated on a spurious loss of bus voltage signal.	5. Limiting Condition for Operation Log
	6. Control Rod Drive Accumulator High Water/Low Pressure Alarm Log
_____d. An APRM Hi Rod Block alarm occurs at 100% power.	7. Diesel Generator Start Stop Log
	8. No log entry required

QUESTION: 008 (1.00)

An operator returns from two (2) days off, and works the following shift hours as a control room operator during a unit 2 outage.

Saturday - 6 am to 2 pm
Sunday - 6 am to 2 pm
Monday - 6 am to 6 pm
Tuesday - 6 am to 6 pm

Select from the hours below the maximum number of additional hours the operator can work before 6 pm on Wednesday.

a. 7 hours

b. 8 hours

c. 12 hours

d. 16 hours

QUESTION: 009 (1.00)

A valve line up is being performed which requires a second person independent verification (IV).

Which ONE of the following statements is correct for performing the IV?

a. Two operators may work together on the alignment and the verification, provided the verifier holds a valid SRO license.

b. The person performing the valve alignment verification must observe the person performing the alignment.

c. ALARA considerations are the ONLY considerations which allow for waiving the independent verification requirement.

d. The IV may be conducted at the same time as the valve alignment, provided it is performed independently by a person of equal or greater qualification.

QUESTION: 010 (1.00)

Prior to accepting the shift the oncoming unit 2 NSO shall:

a. Complete Appendix A, review previous shifts surveillance sheets, Daily Orders, Degraded Equipment Log and the Red Phone Call Log

b. Complete Appendix A, review previous shifts surveillance sheets, Daily Orders, Degraded Equipment Log and the Diesel Generator Start Stop Log

c. Complete Appendix A, review previous shifts surveillance sheets, Daily Orders, Degraded Equipment Log and the NSO logs from the last day on the unit or 4 days whichever is less.

d. Complete Appendix A, review previous shifts surveillance sheets, Daily Orders, Degraded Equipment Log and the Security Conditions Log.

QUESTION: 011 (1.00)

Which ONE (1) of the following statements describes the relationship between the Daily Orders and the Operating Orders when they provide conflicting information?

a. Daily Orders take precedence over Operating Orders, but only during the time frame when the Daily Orders are valid.

b. Operating Orders take precedence over Daily Orders. ~~alteration and system return to normal~~.

c. Operating Orders take precedence over procedures, but DO NOT take precedence over Daily Orders.

d. Daily Orders take precedence over Operating Orders, but may not take precedence over approved procedures.

QUESTION: 012 (1.00)

While performing a routine procedure, an operator determines a specific prerequisite is not applicable to present plant conditions.

In accordance with DAP 9-11, Procedure Use and Adherence, which ONE of the following actions should be taken?

a. Mark the prerequisite step N/A, initial it and then continue with the procedure.

b. Report the condition to the Unit NSO, receive his concurrence the prerequisite is not applicable, and continue with the procedure.

c. Have the Shift Supervisor waive the prerequisite by marking it N/A, with a comment, and initialing the comment.

d. Follow the procedure verbatim until a temporary procedure change can be implemented.

deleted

QUESTION: 013 (1.00)

During an approach to criticality on unit 2, the control rod timer malfunctions.

Which ONE of the following describes the malfunction and recovery actions in accordance with DOP 400-1, Reactor Manual Control System Operation?

a. The rod select matrix white light comes on and stays on. The rod can be driven in by placing the control switch in the Continuous Rod In position.

b. The rod select matrix white light comes on and stays on. The rod is only capable of being moved in by a manual or automatic scram signal.

c. The rod select matrix light fails to illuminate. The rod can be inserted by holding the Timer Malfunction Select Block switch in the RESET position and drive the rod in placing the control switch in the Continuous Rod In position.

d. The rod select matrix light fails to illuminate. The rod can be inserted by holding the Timer Malfunction Select Block switch in the RESET position and placing the Rod Out Override Switch to the Emergency Rod In position.

QUESTION: 014 (1.00)

Dresden 2 has just experienced a loss of offsite power concurrent with a 2 psig Drywell pressure. The diesels fast start as designed.

From the listing of events in Column I, SELECT from Column II the correct time at which the event is designed to occur, following the simultaneous loss of power and the Drywell high pressure. (NOTE: Each response in Column II may be utilized more than once or not at all and only a single answer may occupy one answer space.)
(4 required at 0.25 each)

COLUMN I	COLUMN II
_____a. 2nd LPCI Pump Starts	1. 0 seconds
_____b. Diesel Breaker Closes	2. 5 seconds
_____c. Core Spray Pump Starts	3. 10 seconds
_____d. 1st LPCI Pump Starts	4. 15 seconds
	5. 20 seconds
	6. 45 seconds

QUESTION: 015 (1.00)

Which ONE of the following statements explains how the ESS uninterruptable power supply system provides a continuous source of AC power?

a. Normal power is supplied by the Turbine Building 250 VDC with the alternate power supplied by bus 29 through a rectifier.

b. Normal power is supplied by bus 29 through a rectifier, and switches automatically to bus 25 on loss of power to bus 29.

c. Normal power is supplied by bus 25 with alternate power supplied by MCC 28-2 on loss of power to bus 25.

d. Normal power is supplied by bus 29, and the Turbine Building 250 VDC takes over automatically on loss of power to bus 29.

QUESTION: 016 (1.00)

During normal plant operation, a high level alarm occurs on the isolation condenser. An investigation reveals that the shell side water temperature is increasing.

Which ONE of the following could be happening in the isolation condenser system?

a. The makeup valve to the shell side of the heat exchanger is leaking.

b. The condensate return valve to the reactor is leaking.

c. The steam line vent to the "A" main steam line has failed closed.

d. The isolation condenser has developed a tube leak.

QUESTION: 017 (1.00)

During normal plant operation, power is lost to MCC 29-1.

Which ONE of the following statements correctly describes the effect on the High Pressure Coolant Injection System (HPCI)?

a. Power is lost to MO 2301-8 and MO 2301-9 (HPCI Pump Discharge Valves) making the system inoperable.

b. Power is lost to MO 2301-4 (HPCI Turbine Steam Supply Valve inside the Drywell), but will not effect automatic initiation.

c. Power is lost to MO 2301-49 (Minimum Flow Valve) the pump will run deadheaded if injection valve fails to open.

d. Power is lost to MO 2301-15 (Reject Line to Contaminated Condensate Storage) negating reject capability.

QUESTION: 018 (1.00)

Concerning the ATWS system (Anticipated Transient Without Scram);

Which ONE of the following statements correctly defines the effects on the ARI valves and the Recirculation system when the ATWS system is initiated?

a. Low RPV level energizes the ARI valves and after after a nine (9) second time delay, trips the recirc pump field breakers.

b. High reactor pressure trips the recirc pump field breakers after a nine (9) second time delay, and energizes the ARI valves instantaneously.

c. Low RPV level trips the recirc pump field breakers instantaneously and energizes the ARI valves after a nine (9) second time delay.

d. High reactor pressure instantaneously trips the recirc pump field breakers and energizes the ARI valves.

QUESTION: 019 (1.00)

Which ONE of the following conditions will result in the bypass of the IRM HI HI and INOP scram functions?

a. The Reactor Mode Switch is in RUN, and the companion APRM is NOT downscale.

b. The Reactor Mode Switch is in STARTUP, and the IRM detector is FULLY withdrawn from the core.

c. The Reactor Mode Switch is in RUN, and the IRM detector is FULLY withdrawn from the core.

d. The Reactor Mode Switch is in STARTUP, and the companion APRM is NOT downscale.

QUESTION: 020 (1.00)

Which ONE of the following statements correctly describes the interrelationship of the LPRMs to APRM channels and LPRM groups?

a. Only 143 of the 164 LPRM detectors are required to monitor local flux patterns across the core.

b. A LPRM from the associated LPRM group may be substituted for a failed LPRM.

c. The count circuit will only recognize and count an LPRM input if the LPRM mode selector switch is in OPERATE.

d. An APRM INOP alarm is generated if the number of LPRM inputs per level of an APRM drops below two (2).

QUESTION: 021 (1.00)

A caution in Procedure DGP 1-1, Normal Unit Startup, states that prior to drawing a vacuum, the operator should verify and maintain the pressure set point approximately 50 psig greater than reactor pressure.

From the statements listed below, SELECT the ONE which is the correct reason for this caution.

a. Prevent the bypass valve from inadvertently opening and subsequently closing causing a scram from a flux/pressure spike.

b. Prevent erratic level and pressure indications caused by drawing a vacuum on the RPV.

c. Prevent severe main condenser tube erosion due to steam admission at low vacuum conditions.

d. The Bypass Valves cannot provide effective pressure control at low pressure because the differential pressure between the reactor vessel and the condenser is too low.

QUESTION: 022 (1.00)

Which ONE of the following statements correctly describes the response of a control rod scrammed by reactor pressure alone?

a. The scram time increases as the reactor pressure increases.

b. The control rod will not scram if the reactor pressure is less than 400 psig.

c. The scram is faster than with accumulator pressure alone.

d. The rod will not fully scram with reactor pressure alone due to pressure equalization across the piston.

QUESTION: 023 (1.00)

For the automatic actions/alarms concerning low condenser vacuum listed in column I, SELECT the associated vacuum setpoint in Column II. (Choices in Column II may be used more than once, or not at all)
(~~4~~ 3 required at ~~0.25~~ 0.33 each)

	COLUMN I		COLUMN II
_____a.	Reactor Scram	1.	23" Hg abs
_____b.	Bypass Valves Close	2.	20" Hg abs
_____c.	Turbine Trip	3.	15" Hg abs
		4.	12" Hg abs
		5.	7" Hg abs

QUESTION: 024 (1.00)

Unit 3 is in cold shutdown, with RPV water level below the main steam lines and the vessel head removed. The system engineer desires to cycle the main steam relief valves for an operability check. The Shift Supervisor determines this cannot be done at the present plant conditions.

Which ONE of the below is the reason for this decision?

a. Cycling the valves at atmospheric conditions will damage the valve seats, requiring extensive repair.

b. Cold cycling of the springs on the valves will result in fatigue on the springs, voiding the lifting pressure set points.

c. With the reactor head off, opening the relief valves would violate containment integrity, opening a line to the Suppression Pool.

d. The valves will not open, due to insufficient pressure under the valve disk to overcome the spring force on the valve.

QUESTION: 025 (1.00)

SELECT from the following four (4) systems, or indications the ONES which utilize the dp (flow) signal from the main steam line flow restrictors?

1. Individual steam line flow indication.
2. Steam flow input to the Feedwater Control System.
3. Steam flow signal to the Recirc Runback System.
4. Steam flow input to the Group I Isolation Circuit.

a. 1, 2, 3

b. 2, 3, 4

c. 1, 3, 4

d. 1, 2, 4

QUESTION: 026 (1.00)

The LPRM inputs to a Rod Block Monitor (RBM) are averaged and compared to the reference APRM power signal.

SELECT the ONE statement which correctly describes the function of the Gain Adjust Circuit in the RBM system.

a. If the average of the LPRM inputs is higher than the APRM reference signal, a rod block is initiated.

b. If the average of the LPRM inputs is lower than the APRM reference signal a gain is applied to increase the RBM output to equal or exceed the APRM reference signal.

c. If the Rod Block Monitor output is initially higher than the APRM reference signal, it will immediately initiate a rod block.

d. If the difference between the local average power and the APRM reference signal is too large, the Rod Block Monitor goes into a "NULL" sequence.

QUESTION: 027 (1.00)

The TIP (Traversing Incore Probe) system is in operation at 100% power, when a radiation of 120 R/hr is detected in the Drywell.

SELECT from the following the ONE statement the ONE which accurately describes the response of the TIP system.

a. A "Tip Isolation Off Normal" alarm will occur to alert the operator of an off normal condition on the TIP system.

b. Any TIP detector not in its shield shifts to manual reverse mode, withdraws to the shield chamber and five (5) minutes later the ball valve closes.

c. The TIP "Isolation Off Normal" alarm occurs, and the operator must select "Manual Reverse" and withdraw the TIP detector within five (5) minutes to prevent activation of the shear valve.

d. Any TIP detector not in its shield shifts to manual reverse mode and withdraws to the shield chamber, and the ball valve closes when the detector is in the shield.

QUESTION: 028 (1.00)

The valve line up for the Standby Liquid Control (SLC) system is vital for the safe shutdown of the plant during an ATWS.

Which ONE of the following statements explains how valve 1101-1 (SLC inner Containment isolation valve) is verified to be in the OPEN position.

a. The final valve line up of all safety system valves is performed and verified during Drywell closeout.

b. The valve is a manually operated valve, with remote position indication in the control room.

c. The valve is a fail-open valve, with the air supply removed from the valve during normal operation.

d. The valve is opened and the motor operator is deenergized prior to securing the drywell.

QUESTION: 029 (1.00)

In reference to the Standby Liquid Control System, a minimum of 600 ppm boron in the reactor core is required to be injected within 100 minutes.

Which ONE of the following statements is correct concerning the boron injection?

a. A 600 ppm concentration will provide at least a 2% delta K Shutdown Margin during cold xenon free conditions.

b. The 100 minute maximum time requirement is necessary to provide adequate mixing, and prevent "chugging" in the core.

c. The boron solution in the core results in changing the moderator temperature coefficient from positive to negative.

d. The required 600 ppm boron concentration, in the core, includes a 25% additional margin to accommodate improper mixing.

QUESTION: 030 (1.00)

The rod worth minimizer is required to be operational at low power levels, as determined by the Low Power Set Point (LPSP).

Which ONE of the following conditions will activate the LPSP and actuate the rod blocks?

a. 20% power decreasing as sensed by the APRM reference.

b. 20% power decreasing as sensed by 1st stage turbine pressure.

c. 10% power decreasing as sensed by the main steam flow.

d. 10% power decreasing as sensed by the feedwater flow.

QUESTION: 031 (1.00)

During a reactor startup, which ONE of the listed limitations applies to the use of the Rod-Out-Notch-Override-switch?

a. After the rod movement switch is placed to withdraw, the Rod-Out-Notch-Override-Switch is placed to the NOTCH OVERRIDE for continuous rod withdrawal.

b. After pulling groups 1 and 2 (the first two groups pulled) the Rod Out Notch Override switch shall not be used for groups 3 and 4 until the first bypass valve is partially open or the unit is on the line.

c. After reaching the "black/white" pattern, the Rod-Out-Notch-Override-Switch shall not be used to pull rods between position 00 and 24 until the first bypass valve is open or the unit is on the line.

d. After the "black/white" pattern is established, use of the Rod-Out-Notch-Override-Switch is prohibited.

QUESTION: 032 (1.00)

The steam dryer and moisture assemblies are a part of the reactor vessel internals designed to control moisture carryover and steam carryunder.

Which ONE of the following statements defines the cause and effect of moisture carryover and steam carryunder?

a. Water level carried too high in the moisture separator, results in steam carryover and results in cavitation of the recirc pumps.

b. Water level carried below the skirt results in moisture carryover and damage to the turbine blading.

c. Water level carried below the skirt results in steam carryunder and results in cavitation of the recirc pumps.

d. Water level carried high in the moisture separator results in steam carryunder and damage to the turbine blading.

QUESTION: 033 (1.00)

For each control rod and its associated "four-rod light display" on the full core display of unit 3, four (4) different colors of indicating lights are used to provide indication of various conditions of the control rod drive mechanism.

For the indicator color in column I SELECT the correct condition that is indicated from column II. (NOTE: Each response in Column II may be utilized only once but more than a single answer may occupy one answer space.)
(5 required at 0.20 each)

COLUMN I	COLUMN II
_____a. White	1. Low Nitrogen Pressure or Accumulator High Water Level
_____b. Red	2. Scram Air Header Low Pressure
_____c. Amber	3. Indicates which rod is selected
_____d Blue	4. Control Rod Drive Water High Differential Pressure
	5. Control Rod Drift
	6. Control Rod Uncoupled
	7. Inlet and Outlet Scram Valves Open
	8. Not used

QUESTION: 034 (1.00)

The automatic emergency start of the diesel generator bypasses some of the protective trips for the diesel and the diesel generator supply breaker.

Which ONE of the following statements is correct concerning the diesel generator trip bypasses?

a. The ECCS fast start actuation does NOT bypass the breaker reverse power and the high differential current trips.

b. The ECCS fast start actuation does NOT bypass the diesel engine overspeed and the positive crankcase pressure trips.

c. The undervoltage fast start actuation does NOT bypass the breaker overcurrent trip.

d. The undervoltage fast start actuation does NOT bypass the diesel engine over speed and high differential current trips.

QUESTION: 035 (1.00)

The Source Range Monitor (SRM) detectors are required to be fully inserted into the core until an overlap with the Intermediate Range Monitor (IRM) instrumentation is observed.

Which ONE of the following statements correctly describes the interlocks with the reactor manual control system which enforce this overlap?

a. Attempting to retract an SRM detector which is indicating less than 500 cps will result in a rod block.

b. The SRM detector drive motor is interlocked to prevent detector withdrawal with less than 100 cps indicated.

c. Placing the Reactor Mode Switch in the RUN position will bypass all the SRM interlock functions.

d. The SRM detector drive motor is interlocked to prevent detector withdrawal until all IRM's are on range 3 or higher.

QUESTION: 036 (2.00)

Trips for the Process Radiation Monitors are listed in Column I.

SELECT the appropriate automatic response from Column II for each of the trips listed in Column I.
(NOTE: Items in Column II may be used more than once or not at all and more than one response may accuppy an answer space in Column I)
(10 answers required at 0.2 each)

COLUMN I	COLUMN II
_____a. Main Steam Line Radiation 3 times normal background.	1. Reactor Scram.
_____b. Off Gas Radiation Monitor Hi Hi Trip.	2. Reactor Building Ventilation Isolates.
_____c. Reactor Building Ventilation Exhaust Monitor Trip.	3. Standby Gas Treatment starts
_____d. Reactor Building Refueling Floor Rad Monitor Trip.	4. Off Gas Chimney Isolation Valve closes.
	5. Holdup Volume Drain Valve Closes.
	6. 15 Minute Timer starts.

QUESTION: 037 (1.00)

ADS valves, 203-3B and 203-3C, have differences in their function as compared to the other ADS valves.

Which ONE of the following statements represents the function AND reason for the differences in the valves operation?

a. The valves have a ten (10) second time delay which inhibits the valve from opening for ten (10) seconds since its last closure, to allow for vacuum breaker operation in the relief lines.

b. The valves have an 8.5 minute time delay on the Drywell High Pressure initiation to allow Suppression Pool Cooling to be placed in service prior to admitting steam to the Suppression Pool.

c. The valves automatically close, if actuated by ADS, if Suppression Pool temperature exceeds 170 degrees F, to reduce the vibration in the Suppression Pool due to steam jet pulsations.

d. The valves have a thirty second time delay which closes the valves, if operated by high reactor pressure, to prevent over pressurization of the relief lines.

QUESTION: 038 (1.00)

While operating at 100% power, a rupture occurs in the air line supplying Feedwater Regulating Valve (FWRV) 2A, which is in service.

Which ONE of the statements below identifies the response of the FWRV?

a. The valve fails full open immediately since it uses air to close, and spring pressure to open.

b. The valve fails full open, but the speed is limited by the hydraulic damper.

c. The valve would continue to control for up to one (1) hour, being supplied by the air accumulator on the supply line.

d. The valve would "lock up" in its present position, due to the actuation of the air lock valve.

QUESTION: 039 (1.00)

During normal plant operation, the Reactor Building Ventilation System maintains a 0.25" water gage vacuum in the building. During accident conditions, the Standby Gas Treatment System maintains the negative pressure.

On Failure of the Reactor Building Ventilation and the Standby Gas Treatment Systems, which one of the following mechanisms prevents over pressurization of the Reactor Building?

a. At a pressure of 2.2" water gage, the normal ventilation supply and exhaust dampers open to equalize the pressure to the outside atmosphere.

b. At a pressure of 2.7" water gage, the Standby Gas Treatment outlet damper opens to equalize the pressure to the outside atmosphere.

c. At a pressure of 5.2" water gage, the Air Lock Isolation Bypass Valves open to equalize the pressure to the outside atmosphere.

d. At a pressure of 13.5" water gage, the Blowout Panels part from the beams on the refueling floor to equalize pressure to the outside atmosphere.

QUESTION: 040 (1.00)

Unit 2 is operating at 100% power with the recirculation pumps at 92% speed when a fault in the valve control circuit causes the discharge valve on "A" recirculation pump to move in the closed direction until fully closed.

Which ONE of the following automatic actions correctly defines the recirculation flow control system response to the valve movement?

a. When the flow mismatch exceeds 10% the mismatch circuit will trip the "A" recirc pump.

b. The "A" recirc pump will run back to 28% speed, and the scoop tube will lock up preventing further control.

c. When a flow deviation of 10% exists between the two loops, the master limiter will reduce the "B" recirc pump speed.

d. The "A" recirc pump will attempt to run back to 28% speed until the valve is fully closed, at which time the pump will trip.

QUESTION: 041 (1.00)

The Main Turbine Combined Intermediate Valves (CIV's) are designed to prevent damage to the turbine in the event of a generator trip or load reject.

On a load reject from 100% power, which ONE of the following statements is correct for the operation of the INTERCEPT Valves?

a. A drop in pressure in the Moisture Separator Reheaters (MSRs) to 105 psig will cause the Intercept Valves to go closed to prevent turbine overspeed.

b. When turbine speed increases to 105%, Intercept Valves 1, 3 and 5 begin to close, when they are 50% closed valves 2, 4, and 6 ramp closed.

c. Intercept Valves 2, 4 and 6 fully close at 103% turbine speed while valves 1, 3 and 5 are not closed until 105% turbine speed.

d. Once activated by turbine speed, all Intercept Valves remain closed until turbine speed decreases to 98% at which time all intercept valves ramp open.

QUESTION: 042 (1.00)

While operating at 100% power a malfunction causes the turbine throttle pressure signal to drop ten (10) psig below the pressure setpoint.

CHOOSE from the following conditions the ONE which accurately defines the turbine control system response.

a. The control valves will ramp closed, until the backup pressure regulator takes over at a ten (10) psig increase in throttle pressure.

b. The control valves will ramp open to increase the steam flow in order to return the throttle pressure to the pressure set point.

c. When the control valves ramp open to 105% of the full power position, the pressure set point will ramp down to match turbine throttle pressure.

d. The control valve position will not change since the EHC system controls to maintain reactor pressure, not throttle pressure.

QUESTION: 043 (2.00)

Utilizing the attached drawing (Figure 1) Identify the valves labeled (a) through (j) in Column I from the list of valves listed in Column II (Each response in Column II may be used once, more than once or not at all, and only a single answer may occupy an answer space)
(10 answers required at 0.20 each)

COLUMN I	COLUMN II
_____a.	1. Scram Discharge Volume Vent Valves
_____b.	2. Scram Discharge Volume Drain Valves
_____c.	3. ARI Valves
_____d.	4. Scram Outlet Valve
_____e.	5. Backup Scram Valves
_____f.	6. Scram Dump Valves
_____g.	7. Scram Pilot Valves
_____h.	8. Scram Inlet Valve
_____i.	
_____j.	

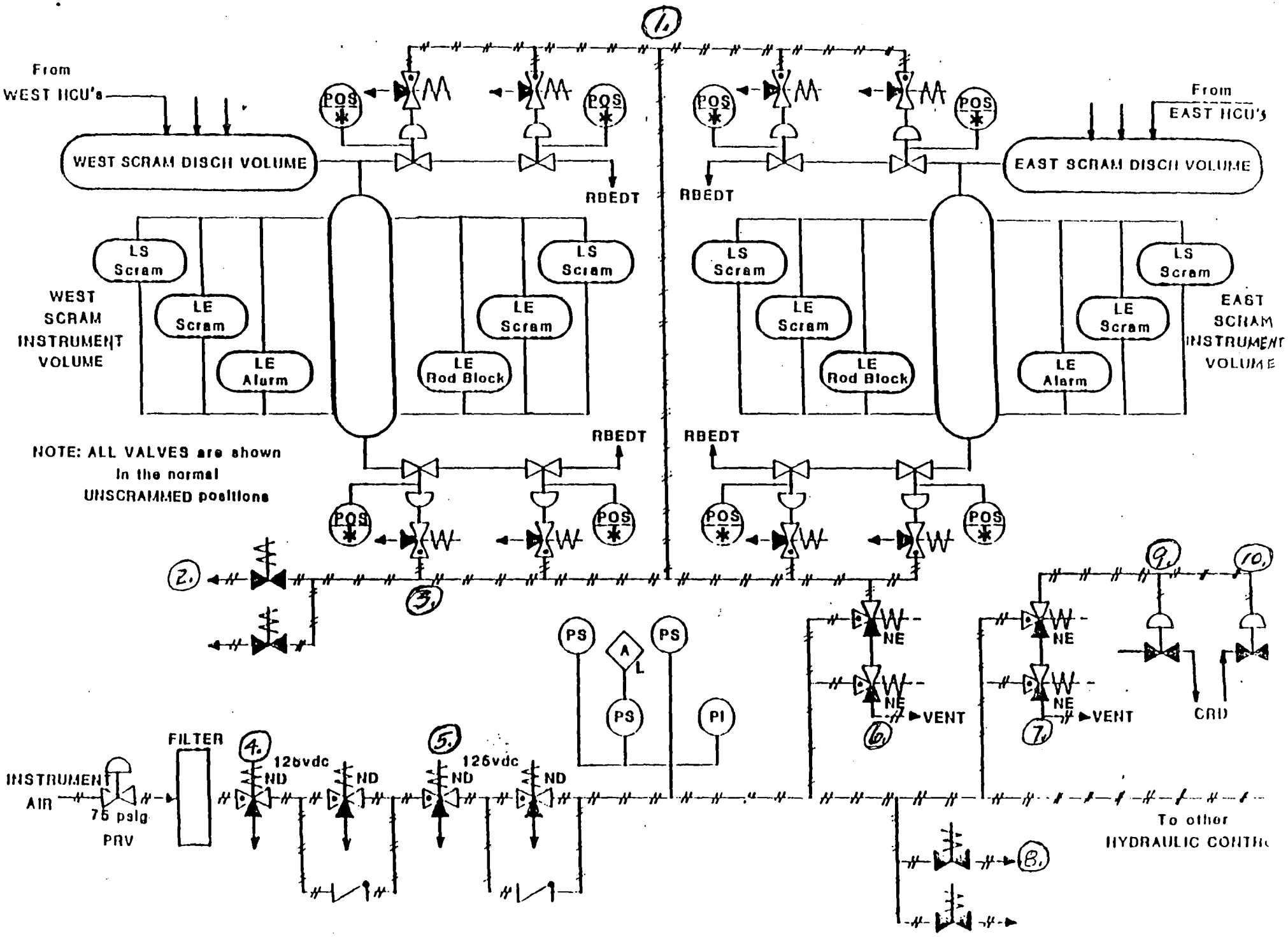
1.
From
WEST HCU's
WEST SCRAM DISCH VOLUME
POS
RBEDT
From
EAST HCU's
EAST SCRAM DISCH VOLUME
LS Scram
LE Scram
LE Alarm
LE Rod Block
WEST SCRAM INSTRUMENT VOLUME
EAST SCRAM INSTRUMENT VOLUME
NOTE: ALL VALVES are shown in the normal UNSCRAMMED positions
2.
3.
PS
A
L
PI
NE
VENT
6.
7.
9.
10.
CRD
INSTRUMENT AIR
75 psig
PRV
FILTER
4.
5.
126vdc
ND
To other HYDRAULIC CONTR
8.

Figure 1

QUESTION: 044 (1.00)

One (1) of the overflow weirs to the skimmer surge tanks from the Fuel Storage Pool has become plugged during normal operation of the Fuel Pool Cooling and Cleanup System.

Which ONE of the following correctly describes the system response to this malfunction?

a. A low Low level trip of the operating Fuel Pool Cooling Pumps will result when the level in the effected Skimmer Surge Tank drops to the trip set point of 17 inches.

b. No trip of the operating pumps will occur since the trip system requires low low level in both Skimmer Surge Tanks to trip the operating pumps..

c. No trip of the operating pump will occur since the only trip of the Fuel Pool Cooling Pumps is low suction pressure at 6 psig.

d. No trip of the operating pump will occur since there is an equalizing line which will maintain Skimmer Surge Tank level, even if the inlet line to one tank is plugged.

QUESTION: 045 (1.00)

For the Reactor Water Cleanup System trip setpoints listed in COLUMN I, Select the correct trip function or protection provided from COLUMN II. (NOTE: Each response in Column II may be utilized only once and only a single answer may occupy one answer space.)
(4 required at 0.25 each)

COLUMN I	COLUMN II
_____a. Auxiliary pump cooling water outlet temperature 140 deg F	1. Closes valves 1, 1A, 2, 3, and 7 to isolate possible leakage paths.
_____b. RWCU NRHX outlet temperature 150 deg F	2. Closes valves 1, 1A, 2, and 3 to Aux Pump Seal damage.
_____c. 150 psig after the PCV Station	3. Closes valves 1, 1A, 2, and 3 to prevent dropping the filter cake.
_____d. Reactor Water Level + 8 inches	4. Closes valves 1, 1A, 2, and 3 to to protect the demineralizer resin beads.
	5. Closes valves 1, 1A, 2, 3, and 7 to prevent removal of boron and resin damage.
	6. Closes valves 1, 1A, 2, and 3 to protect the system low pressure piping and equipment.
	7. Closes valve 1, 1A, 2, and 3 to prevent loss of primary coolant to rad waste during shutdown.

QUESTION: 046 (1.00)

During a plant cooldown using the Shutdown Cooling System, the operator is directed to open Shutdown Cooling Heat Exchanger Discharge Valve 4B to the 100% full open position to maximize the cooldown rate.

Which ONE of the following statements CORRECTLY DESCRIBES the consequences of this valve manipulation?

a. This IS a good application of the operating procedure because it enables that maximum heat removal for a given cooling water flow.

b. This IS a good application of the operating procedure, because the Heat Exchanger Discharge Valves are not designed as throttle valves.

c. This IS NOT a good application of the operating procedure, because it will result in Shutdown Cooling Pump runout on high flow.

d. This IS NOT a good application of the operating procedure, because it induces turbulence in the heat exchanger due to low back pressure.

QUESTION: 047 (1.00)

Dresden unit 2 is operating at 70% power when a break occurs in the Core Spray injection line between the vessel penetration and the shroud.

Which ONE of the following statements CORRECTLY DESCRIBES the line break indication and alarm functions?

a. The normal +3.2 psid differential pressure will increase to +5.9 psid and initiate alarm "Core Spray Line Break"

b. There will be no alarm or indication since the line break detection system only alarms if the system is operating and a differential pressure is sensed.

c. There would be no alarm since at 70% power the leak detection system will not detect a break due to the low delta P across the shroud.

d. The drop in pressure on the LO side of the delta P results in a -2.7 psid signal and an alarm "Core Spray Line Break".

QUESTION: 048 (1.00)

Concerning the Core Spray Injection Valves 1402-24, and 1402-25;

Which ONE of the following features provides for overpressure protection of the Core Spray low pressure piping?

a. Up to 1250 psig, a check valve installed in the piping down stream of the injection valves prevents backflow.

b. Above 350 psig reactor vessel pressure, niether valve can be opened either automatically or manually.

c. Below 350 psig both valves can be opened, provided valve 1402-25 is opened first.

d. Above 350 psig, either valve can be opened, but not both valves simultaneously.

QUESTION: 049 (1.00)

The Low Pressure Coolant Injection System (LPCI) injects into the two recirculation loop lines. To prevent injecting into a loop which has a major break, a loop select logic is used to determine the LPCI injection flow path.

Which ONE of the following Statements CORRECTLY defines the LPCI Loop Select Logic, and the resulting actions?

a. The Loop Select Logic looks at the differential pressure across the recirc pumps, and if both pumps are running, initiates injection into both recirc loops.

b. The Loop Select Logic looks at the differential pressure between the two recirc loop risers and based on the differential pressure, initiates injection into the recirculation loop without the break.

c. The Loop Select Logic looks at the differential pressure between the two recirc loop risers, and if there is no difference between the differential pressures, initiates injection into recirculation loop "A".

d. If no recirc pumps are running the Loop Select Logic cannot determine intact loop status and loop selection will have to be made with the LPCI Loop Select pushbuttons.

QUESTION: 050 (1.00)

During an automatic actuation of the Low Pressure Coolant Injection System (LPCI,) an operator notices that the "A" loop system flow rate is 750 gpm, and the "A" pump minimum flow valve is in the CLOSED position.

Which ONE of the listed statements is CORRECT concerning the minimum flow valve status?

a. The valve condition is normal, the valve should stay closed until system flow reaches 1000 gpm.

b. The valve condition is abnormal, the valve should stay open until system flow reaches 1000 gpm.

c. The valve condition is abnormal since the minimum flow line stays open unless manually closed.

d. The valve condition is normal, since the minimum flow valve closes when system flow reaches 500 gpm.

QUESTION: 051 (1.00)

The plant is operating at 95% power when the Center Desk operator is directed to start SBGT fan "B" for a scheduled surveillance.

Which ONE of the following correctly describes the effect that a manual start of the SBGT fan "B" has on the SBGT system operation.

a. The SBGT System will NOT achieve the minimum required flow rate.

b. The "A" fan will auto start 10 seconds after a Group II Isolation signal is received.

c. The "A" fan will NOT auto start if the "B" fan trips.

d. The "B" fan will trip and the "A" fan will auto start if a Group II initiation signal is received.

QUESTION: 052 (1.00)

Column B lists refueling interlocks. For each situation listed in Column A, MATCH the CORRECT refueling interlock(s) from Column B that is(are) in effect. (NOTE: Each response in Column B may be used once, more than once, or not at all, and more than a single answer may occupy one answer space.)
(6 required at 0.17 each)

COLUMN A

_____a. Refuel platform is over the vessel with the mode switch in REFUEL when the fuel grapple is loaded.

_____b. Mode switch in REFUEL, with one control rod withdrawn.

_____c. Refuel platform is over the core, no hoists loaded, one rod withdrawn and the mode switch is in STARTUP.

_____d. Refuel platform is over the core, no hoists loaded, no rods withdrawn, and the mode switch is in STARTUP.

COLUMN B

1. Fuel grapple power is interrupted

2. Monorail auxiliary hoist power is interrupted

3. Trolley-mounted hoist power is interrupted

4. Rod block is generated

5. Bridge motion toward the core is stopped

6. No interlock or rod block applied

QUESTION: 053 (1.00)

Which ONE of the following statements correctly describes the Rod Block Monitor (RBM) Hi Block condition?

a. Even though the RBM recorders do not indicate until 30% power, the rod blocks are enforced any time the Mode Switch is in RUN.

b. When a new rod is selected, the RBM will automatically select the appropriate rod block level.

c. The RBM Trip Set High indicator will light whenever reactor power approaches within 5% of the current rod block level.

d. The Trip Level Record button will cause the recorder to respond with the rod block setpoint for the next higher rod block level.

QUESTION: 054 (1.00)

During normal power operation the Drywell and Torus are maintained at specified pressures to minimize pressure transients in the event of a LOCA.

Which ONE of the following statements correctly identifies the pressures maintained in the two (2) areas and the methods used to achieve those pressures.

a. The nitrogen pressure control valve maintains the Torus pressure at 1.1 psig and the pumpback system maintains a 0.5 psid differential between the Torus and Drywell.

b. The nitrogen pressure control valve maintains the Drywell pressure at .5 psig and the Torus to Drywell vacuum breakers maintain a 1.0 psid differential between the Torus and the Drywell.

c. The nitrogen pressure control valve maintains the Drywell pressure at 1.1 psig and the pump back system maintains a 1.0 psid differential between the Drywell and the Torus.

d. The nitrogen pressure control valve maintains the Drywell pressure at 1.0 psig and the Torus to Reactor Building vacuum breakers maintain a 1.1 psid differential pressure between the Torus and the Reactor Building

QUESTION: 055 (2.00)

Concerning the Containment Isolation Systems;

For the isolation groups listed in Column I SELECT the appropriate isolation setpoint(s) from Column II and the isolation valve effected from Column III. (Items in columns II and III may be used more than once or not at all) (20 required at 0.1 each)

COLUMN I GROUP ISOLATIONS	COLUMN II SETPOINTS	COLUMN III VALVE RESPONCE
_____a. Group I	1. Reactor Low Low Water Level -59"	8. Isolation Condenser Vent to Main Steam Line
_____b. Group II	2. Reactor Low Water Level + 8"	9. Drywell Nitrogen Makeup Valve
_____c. Group III	3. High Drywell Pressure 2 psig	10. Torus Drain Valves
_____d. Group IV	4. Reactor Pressure < 80 psig	11. Reactor Water Cleanup Inlet Valve
_____e. Group V	5. High Steam Flow to Isolation Condenser 300% of design	12. Shutdown Reactor Cooling Return Valves
	6. Hi Drywell Radiation 100 R/hr	13. HPCI Steam Supply Valves
	7. Steam Line Low Pressure <850 psig in the RUN mode	14. Recirculation Loop Sample Line
		15. Isolation Condenser Steam Supply Valves
		16. Shutdown Cooling Isolation Valves
		17. Drywell Vent Valves
		18. Drywell Air Sampling Isolation Valves

QUESTION: 056 (1.00)

A transient has occurred on Unit 3 which has resulted in the following plant conditions:

- 20 control rods indicate between notch 26 and 48
- APRMs indicate between 3 and 5 percent
- All Reactor Water level indication is unreliable
- DEOP 400-1, RPV Flooding, has been entered and is being executed by the Shift Supervisor
- Five (5) ADS valves are OPEN
- Reactor pressure is 310 psig and DECREASING
- Condensate and Feedwater systems are injecting

Which ONE of the following statements explains the plant status that is indicated by the DECREASING reactor pressure.

a. The feed flow rate is less than the steaming rate therefore indicating that core cooling is INSUFFICIENT.

b. The vessel has been flooded to the main steam lines therefore ensuring ADEQUATE core cooling.

c. The steaming rate is less than the feed water flow rate therefore indicating that the reactor is SHUTDOWN.

d. The reactor decay heat is insufficient to vaporize the injected feed water therefore ensuring core SUBMERGENCE.

QUESTION: 057 (1.00)

A transient is in progress on Unit 2 which has resulted in a failure of rods to insert on a scram signal.

Why does DEOP 400-5, Failure to Scram, direct the operator to LOCKOUT BOTH Core Spray pumps until otherwise directed?

a. To prevent injecting a lower quality water until HPCI and RCIC clean sources have been exhausted.

b. To prevent cold water injection from placing excessive thermal stresses on the fuel cladding.

c. To prevent removal of any boron from the core when Standby Liquid Control injection is required.

d. To prevent cold water spray from placing excessive thermal stresses on the reactor vessel.

QUESTION: 058 (1.00)

The Offgas High Radiation alarm for Unit 2 has just annunciated.

In addition to a fuel element failure, which one of the following could cause the high offgas radiation condition?

a. Condensate demineralizer retention element failure.

b. Failure to achieve recombination in the recombiner.

c. Trip of the operating Steam Jet Air Ejector.

d. Increased off gas dilution steam flow.

QUESTION: 059 (1.00)

Unit 3 is operating at 98% rated power when the Chimney Isolation Valve AUTOMATICALLY CLOSES.

Which one of the following conditions will result in the closure of the Chimney Isolation Valve?

a. ONE main steam line radiation monitor is alarming high and ONE offgas radiation monitor is alarming high for 15 minutes.

b. ONE main steam line radiation monitor is alarming high for 15 minutes and ONE main steam line radiation monitor is alarming downscale.

c. ONE offgas radiation monitor is alarming downscale and ONE offgas radiation monitor is alarming high-high for 15 minutes.

d. ONE main steam line radiation monitor is alarming high-high and ONE offgas radiation monitor is alarming high-high for 15 minutes.

QUESTION: 060 (1.00)

Unit 2 is operating at 80% power the Shift Supervisor has ordered an IMMEDIATE evacuation of the Control Room due to smoke and a noxious oder coming from the back panels.

Which ONE (1) of the following statements describes the actions to be taken by the operator prior to leaving the Control Room?

a. SCRAM the reactor by placing the Mode Switch to SHUTDOWN, trip the turbine, trip both recirc pumps, and initiate the isolation condenser.

b. Manually SCRAM the reactor using the pushbuttons, rset the SCRAM, notify Security, and place the relief valve control switches to OFF.

c. Manually SCRAM the reactor using the pushbuttons, place ADS in INHIBIT and the relief valve control in OFF, initiate the isolation condenser and close the MSIV's.

d. Manually SCRAM the reactor using the pushbuttons, place the Mode Switch in SHUTDOWN, reset the SCRAM, place ADS in INHIBIT, close the MSIV's and initiate the isolation condenser.

QUESTION: 061 (1.00)

Unit 3 has experienced a transient with a failure to scram and Standby Liquid Control (SBLC) has been initiated.

Select the reason that DEOP 400-5, Failure to Scram, directs the operator to terminate boron injection when the SBLC tank level decreases to 27 percent.

a. The hot shutdown boron weight has been injected.

b. The cold shutdown boron weight has been injected.

c. Cavitation of the SBLC pumps will be prevented.

d. A positive temperature coefficient will be prevented.

QUESTION: 062 (1.00)

Which ONE of the following reactor recirculation flow control failures would result in the MOST SEVERE inadvertent reactivity addition transient if the reactor is initially at 50% rated power?
(Assume not operator action.)

a. A one (1) percent per minute speed increase of both pumps.

b. A speed increase of both pumps at the maximum rate of pump speed increase.

c. A speed increase of one (1) pump at one (1) percent per minute.

d. A speed increase of one (1) pump at the maximum rate of pump speed increase.

QUESTION: 063 (1.00)

Unit 3 is operating at 75% rated power with EHC pressure controller "A" controlling reactor pressure.

Select the system failure which would result in the largest increase in reactor pressure.

a. EHC steam throttle pressure sensor "A" fails downscale.

b. EHC pressure setpoint controller fails upscale.

c. All MSIVs close on a group 1 isolation signal.

d. All bypass valves fail closed on a turbine trip.

QUESTION: 064 (1.00)

An unisolable reactor coolant leak on Unit 2 has resulted in a reactor scram and a rapid increase in drywell pressure. The Shift Supervisor has just entered the DEOPs to take action to mitigate the leak. Plant conditions are as follows:

- All rods are inserted
- Drywell pressure = 9 psig increasing
- All automatic plant functions have performed properly
- HPCI is maintaining reactor level at 0 inches

Select the correct action that the Shift Supervisor should direct in order to control drywell pressure in accordance with the DEOPs.

a. Initiate venting with SBGT.

b. Initiate torus sprays.

c. Initiate drywell sprays.

d. Initiate torus and drywell sprays.

QUESTION: 065 (1.00)

A transient on Unit 2 has resulted in a rupture of the torus causing torus level to decrease. Plant conditions are as follows:

- Torus level = 7.0 feet, steady
- Torus bottom pressure = 3.5 psig
- Torus water temperature = 145 deg F

Which ONE of the following statements correctly describes the effect that this Torus water level has on the operation of ECCS pumps for reactor water level control.

a. Discontinue operation of the LPCI or the Core Spray pumps to prevent cavitation on low suction pressure.

b. Continued operation of HPCI is allowed if the suction is aligned to the CST to provide adequate suction pressure.

c. Total LPCI system flow must be limited to 20000 gpm with four pumps operating to ensure adequate NPSH.

d. Total Core Spray system flow must be limited to 10000 gpm with two pumps operating to ensure adequate NPSH.

deleted

QUESTION: 066 (1.00)

An accident on Unit 2 has resulted in a complete loss of reactor water injection systems. Reactor water level is -155 inches and decreasing.

Which ONE of the following correctly describes plant conditions that provide adequate cooling of the core.

a. One isolation condenser operating or at least one ADS valve open if reactor pressure is less than 120 psig.

b. Open all available ADS valves when reactor level drops to less than -143 inches.

c. One isolation condenser operating and all ADS valves closed if reactor water level is less than -185 inches.

d. Isolation condensers out of service and all ADS valves are closed if reactor pressure is greater than 120 psig.

QUESTION: 067 (1.00)

A reactor scram signal was received on Unit 3 with a failure of all rods to insert. DEOP 400-5, Failure to Scram, directs the operators to "maintain RPV water level between -143 inches and +48 inches" using Condensate/Feed, HPCI, CRD, or LPCI systems.

Select the correct reason, for using the Condensate/Feed, HPCI, and CRD systems for reactor level control.

a. Each takes a suction on a high quality water source.

b. Each provides a high pressure injection source.

c. Each provides a high volume injection source.

d. Each injects water into the reactor vessel downcomer.

QUESTION: 068 (1.00)

During an ATWS on Unit 3, operators are unable to maintain reactor water level above -143 inches. DEOP 400-5, Failure to Scram, directs the operators to "maintain RPV water level between -173 inches and the level to which it was lowered."

If level cannot be maintained above -173 inches, DEOP 400-5, Failure to Scram, directs Emergency Depressurization of the reactor vessel because this is the lowest reactor level that:

a. will generate sufficient steam to maintain the uncovered clad below 1500 deg F.

b. will maintain the peak fuel centerline temperature of any fuel pin below 2200 deg F.

c. can be maintained without noticeable reactor power and level oscillations occurring.

d. can provide any steam generation in the covered portion of the core for steam cooling of the uncovered fuel.

QUESTION: 069 (1.00)

During an Anticipated Transient Without a Scram on Unit 3, operators have lowered level to -140 inches. When the SBLC tank level has decreased to 35%, operators commence raising reactor water level per DEOP 400-5, Failure to Scram. While increasing reactor water level plant conditions are as follows:

- operators are increasing reactor water level with reactor feed pumps
- reactor pressure = 920 psig and constant
- reactor power is steadily increasing on IRMs

Select the reason that reactor power increased when reactor water level was raised.

a. Insufficient boron has been injected into the vessel to maintain shutdown conditions in reactor.

b. Uneven boron mixing in the vessel has prevented sufficient boron from reaching the core area.

c. The Hot Shutdown Boron weight is insufficient to keep the reactor shutdown when vessel level is increased.

d. The water injected into the vessel flushed some of the boron from the core area.

QUESTION: 070 (1.00)

Which ONE of the following explains why DEOP 300-2, Radioactive Release Control, directs the operator to restart the Turbine Building Ventilation, if it is shutdown?

a. to filter the air in the turbine building before release to the environment.

b. to prevent an unmonitored ground level release of radioactivity.

c. to maintain a positive pressure inside the turbine building.

d. to reduce the turbine building area and equipment temperatures.

Deleted

QUESTION: 071 (1.00)

The reactor is in the process of being placed into cold shutdown following 85 days of continuous power operation when a complete loss of the Shutdown Cooling System occurs.

Which ONE of the following considerations should the Shift Supervisor use to prioritize the alternative methods of decay heat removal, directed by DOA 1000-1, Residual Heat Removal Alternatives?

a. heat capacity

b. reactor makeup capacity

c. reactor water chemistry impact

d. environmental impact

QUESTION: 072 (1.00)

Unit 2 is operating at 100% rated thermal power when reactor recirculation pump A trips.

The immediate operator action is to reduce reactor recirculation pump B speed to:

a. 80%, to allow inserting rods to get below the 80% flow control line.

b. 59%, to allow a restart attempt of reactor recirculation pump A.

c. 42%, to reduce the jet pump riser vibration during single loop operation.

d. 28%, to prevent inducing excessive thermal stress on the reactor vessel lower head.

QUESTION: 073 (1.00)

A Loss of Coolant Accident has occurred. The reactor has scrammed and LPCI is injecting into the reactor vessel. Plant indications are as follows:

- Drywell temperature recorder 3-1340-1
  - Point 9 = 310 deg F
  - Point 10 = 305 deg F
- Drywell pressure = 45 psig
- Reactor pressure = 100 psig
- Reactor water level indicators
  - Fuel Zone A = -70 inches
  - Fuel Zone B = -72 inches
  - Wide Range = -50 inches
  - Medium Range = -58 inches
  - Narrow Range A = 0 inches
  - Narrow Range B = 0 inches

Select the correct diagnosis of the reactor water level indications.

a. Reactor water level cannot be determined because the flow through the core from the LPCI injection rate will result in level indicator error.

b. Reactor water level cannot be determined because the Reactor Pressure Vessel Saturation Pressure limit has been exceeded.

c. Reactor water level is about -72 inches because the Fuel Zone indicators are above their minimum useable indicating level.

d. Reactor water level is between -50 inches and -58 inches because the wide and medium range indicators agree and are onscale.

QUESTION: 074 (1.00)

DEOP 300-1, Secondary Containment Control, is entered when a Reactor Building area radiation exceeds its maximum normal value in any area because this area radiation level is an indication:

a. that an uncontrolled release of radioactivity to the environment is occurring.

b. that a direct challenge to the structural integrity of the secondary containment exists.

c. of a failure of the Reactor Building ventilation system to properly isolate.

d. of the impact that a breach of secondary containment would have on the environment.

QUESTION: 075 (1.00)

During a plant transient on Unit 3, the Shift Supervisor enters DEOP 300-1, Secondary Containment Control. Plant conditions are as follows:

- Reactor power = 80% by APRMs
- Reactor Building East Corner Room = 8 inches increasing
- Reactor Building West Corner Room = 0 inches
- HPCI area temperature = 205 deg F increasing rapidly
- HPCI cubicle area radiation = 50 mr/hr increasing slowly
- Alarm "HPCI AUTO ISOLATION INITIATED" is annunciating
- HPCI inboard isolation valve 3-2301-4 indicates open
- HPCI outboard isolation valve 3-2301-5 indicates closed

Select the proper corrective action that the Shift Supervisor is required to direct.

a. Isolate all systems discharging into the HPCI area and execute DGP 2-1, Normal Unit Shutdown.

b. Attempt to isolate all systems discharging into the HPCI area and execute DEOP 400-1, RPV Flooding.

c. Initiate a reactor scram and execute DEOP 400-2, Emergency Depressurize the RPV.

d. Initiate a reactor scram and execute DEOP 100, RPV Control.

QUESTION: 076 (1.00)

Unit 2 is operating at 100% rated power when a complete loss of RBCCW occurs. The operator begins a reactor power reduction.

MATCH the plant conditions in Column A with the required immediate operator actions in Column B. (NOTE: Each response in Column B may be utilized only once, and only a single response may occupy one answer space.)

(4 required at 0.25 ea.)

COLUMN A (PLANT CONDITION)	COLUMN B (OPERATOR ACTION)
_____ a. one minute has passed and RBCCW is not restored	1. enter DGP-2, Normal Unit Shutdown
_____ b. plant equipment damage is imminent	2. manually scram the reactor
_____ c. Drywell pressure is 2.1 psig	3. enter DOA 500-1, Inadvertent Entry into Unstable Power to Flow Region
_____ d. core flow has decreased to 45 x 10EE6 lbm/hr	4. cease reactor recirculation pump speed decreases
	5. enter DEOP 200, Primary Containment Control
	6. trip reactor recirculation pumps
	7. trip the Drywell Coolers
	8. trip RWCU pumps

QUESTION: 077 (1.00)

Select the correct Unit 2 plant response to a complete loss of instrument air pressure.

a. Level in the main condenser hotwell will increase due to MAKEUP valve failing OPEN and REJECT valve failing CLOSED.

b. SBGT system discharge flow rate could exceed its Technical Specification flow limit since the SUCTION FLOW CONTROL VALVES will fail OPEN.

c. Reactor Recirculation Motor Generator oil coolers will overheat due to service water TEMPERATURE CONTROL VALVES to the oil coolers failing CLOSED.

d. The reactor will scram on high reactor pressure or high reactor flux due to all the INBOARD MSIVS failing fully CLOSED.

QUESTION: 078 (1.00)

Unit 2 is operating at 25% rated power when a main turbine trip occurs.

Select the correct IMMEDIATE operator action if the operator identifies that the turbine speed is increasing and the Main Stop Valves (MSVs) are OPEN.

a. Manually trip the main turbine and close the MSVs.

b. Open both main generator output circuit breakers.

c. Verify the main generator trips on reverse power after 3 seconds.

d. Initiate a reactor scram and close the MSIVs.

QUESTION: 079 (1.00)

Unit 2 is operating at 100% rated power when ~~the~~ all station 125 VDC ~~system~~ POWER is lost due to a Battery ground.

Select the correct plant response.

a. The LPCI pump motor breakers will lose control power but can be operated manually from inside the local breaker cubicle.

b. The Core Spray automatic initiation logic will be disabled but the system can be manually initiated from the Control Room.

c. The ADS automatic initiation logic will lose power resulting in an automatic depressurization of the reactor pressure vessel.

d. The Emergency Diesel Generator initiation logic will be disabled but the diesels can be started manually from the Control Room.

QUESTION: 080 (1.00)

Unit 3 is operating at 60% rated power with CRD pump A tagged out of service for maintenance. A trip of CRD pump B results in EIGHT (8) control rod "ACCUMULATOR TROUBLE" alarms.

Why does DOA 300-1, Control Rod Drive System Failure, direct the operator to immediately scram the reactor?

a. To prevent reactor coolant back leakage into the CRD hydraulic accumulators and the subsequent high area radiation conditions.

b. To ensure a reactor scram can be accomplished within the maximum scram time since rod insertion will be slower at lower accumulator pressures.

c. To ensure sufficient control rods can be fully inserted to shutdown the reactor since a generic CRD problem has occurred.

d. To prevent control rods from failing to fully insert on a scram signal due to inadequate accumulator pressures to drive the control rods in.

QUESTION: 081 (1.00)

Unit 3 is operating at 100% rated power when a trip of BOTH Reactor Recirculation pumps occurs.

Which ONE of the following plant responses would require the operator to immediately scram the reactor?

a. Five (5) APRMs are oscillating on a 10 second period with a peak-to-peak amplitude of three (3) percent.

b. Three (3) LPRMs near the center of the core are alarming upscale on a 10 second period.

c. Five (5) LPRMs are oscillating between the upscale and downscale alarms on a three (3) second period.

d. Three (3) APRMs are oscillating three (3) percent above and below the upscale alarm every three (3) seconds.

QUESTION: 082 (1.00)

A transient is in progress on Unit 3 that is causing Torus Water level to INCREASE. The operating crew is executing DEOP 200-1, Primary Containment Control.

Select the adverse condition that is prevented by maintaining Torus Water level below the SRV Tail Pipe Level Limit in accordance with DEOP 200-1.

a. Failure of the SRV tailpipes and quenchers due to chugging in the tail pipe during SRV operation.

b. Damage to the lower region of the Torus due to exceeding the maximum allowed Torus Bottom Pressure Limit.

c. Primary containment failure due to exceeding the structural capability of the SRV tailpipes and quenchers.

d. Torus overpressurization due to inadequate Torus Chamber air space if a rapid reactor depressurization occurs.

QUESTION: 083 (1.00)

A malfunction of the Reactor Feedwater Level Controller has resulted in an INCREASING reactor water level on Unit 2.

The Reactor Feedwater Pumps are automatically tripped on a high reactor water level signal to prevent:

a. feed pump damage due to increasing pump discharge flow rate and head.

b. reactor vessel damage due to completely filling and overpressurizing the vessel.

c. main steam line piping and hanger damage due to filling the main steam lines.

d. RCIC and HPCI turbine damage due to moisture carryover into the turbines.

QUESTION: 084 (1.00)

A transient on Unit 3 has resulted in a release of radioactive contaminants to the Reactor Building. Plant conditions are as follows:

- Reactor Building Ventilation Exhaust Radiation = 7 mr/hr
- Reactor Building to atmosphere differential pressure has increased to +0.2 inches of water, and is steady
- Isolation condenser area temperature = 165 deg F increasing
- Other Reactor Building temperatures are near normal

Select the correct diagnosis of plant equipment and system operation for these conditions.

a. Standby Gas Treatment system has started and is operating properly.

b. Reactor Building Ventilation fans tripped but the system failed to isolate.

c. Reactor Building Blow-out panels have been blown out to relieve building pressure.

d. Secondary containment is intact and containing all radioactive contaminants.

QUESTION: 085 (1.00)

Which ONE of the following explains why DEOP 400-4, Primary Containment Flooding, directs the operator to vent the reactor pressure vessel when primary containment water level reaches 25 feet?

a. To prevent exceeding the primary containment design pressure due to the compression of the containment air space.

b. To reduce the pressure exerted on the bottom of the Torus structure due to the height of water plus the containment air pressure.

c. To prevent developing a higher pressure inside the reactor pressure vessel than exists in the containment due to trapped steam.

d. To ensure that the reactor vessel is vented before the reactor vent lines are submerged by water in the containment.

QUESTION: 086 (1.00)

During the execution of DEOP 400-4, Primary Containment Flooding, primary containment water level is raised to 82 feet.

Select the reactor vessel level that should be indicated by the reactor vessel level instrumentation.

a. -191 inches

b. -143 inches

c. +36 inches

d. +60 inches

QUESTION: 087 (1.00)

Match the instrumentation scrams in Column A with the Technical Specification basis provided in Column B. (NOTE: Each response in Column B may be utilized only once, and only a single answer may occupy one answer space.) (4 required at 0.25 ea.)

	COLUMN A (SCRAMS)		COLUMN B (BASIS)
_____	a. MSIV 10% closure	1.	prevent exceeding MCPR Safety Limit
_____	b. Main steam line high radiation	2.	prevent exceeding LHGR Thermal Limit
_____	c. Drywell pressure	3.	reduce reactor vessel pressure transient
_____	d. APRM high flux in Startup Mode	4.	reduce reactor vessel level transient
		5.	backup the low reactor level scram
		6.	isolate radioactive releases from the environment
		7.	reduce radioactive contamination of the main turbine

Deleted

QUESTION: 088 (1.00)

Diesel generator number 2 for Unit 2 is being run for an operability surveillance when Bus 24-1 normal supply breaker from Bus 24 trips open and cannot be reclosed. Plant conditions are as follows:

- Reactor is operating at 100% rated power
- Maintenance estimates repair of the normal supply breaker will take at least 12 hours
- LPCI pump 2D is tagged out and is expected to be out of service for maintenance for at least 2 more days
- All Offsite power lines are available
- Diesel number 2 is running normally and supplying Bus 24-1

Which ONE of the following describes the Technical Specification actions that the Shift Supervisor must direct?

a. Reactor operation is permissible for the next 7 days because only one offsite power line can be connected to Unit 2.

b. Reactor operation is permissible for the next 30 days because only one of the LPCI system pumps is inoperable.

c. Be in Hot Shutdown in 12 hours and Cold Shutdown in the following 24 hours because the normal power supply to Bus 24-1 is inoperable.

d. Reactor operation is permissible for the next 7 days because both LPCI system 2 pumps are inoperable.

QUESTION: 089 (1.00)

Select the detrimental effects of a hydrogen oxygen burn in the primary containment from the following:

1. Pressures exceeding the structural capability of the Drywell
2. Uncontrolled release of radioactivity
3. Damage to plant equipment required for the safe shutdown of the reactor plant
4. Pressures excursions exceeding the capacity of the Torus to Reactor Building vacuum breakers

a. 1, 2, 3

b. 2, 3, 4

c. 1, 3, 4

d. 1, 2, 4

QUESTION: 090 (1.00)

DEOP 200-2, Primary Containment Hydrogen Control, directs the operator to maintain a hydrogen concentration less than 6% and an oxygen concentration less than 5% to prevent _____.

a. a detonation

b. a deflagration

c. an explosion

d. an implosion

QUESTION: 091 (1.00)

DEOP 200-2, Primary Containment Hydrogen Control, directs the operators to initiate torus sprays when hydrogen and oxygen concentrations are above 6% and 5%, respectively.

Select the reasons for initiating torus sprays from the following:

1. to scrub the radioactive gases before venting to the environment
2. to suppress the pressure increase of a hydrogen-oxygen combustion
3. to prevent containment pressure from exceeding design pressure
4. to reduce the flammability of the combustible gases in the torus

a. 1, 2, 3

b. 2, 3, 4

c. 1, 3, 4

d. 1, 2, 4

QUESTION: 092 (1.00)

A startup is in progress on Unit 2 with reactor power at 2%. Following a coupling check, the operator has determined that a control rod is uncoupled.

Which ONE of the following is the correct immediate operator action to be taken in accordance with DOA 300-5, Inoperable or Failed Control Rod Drives?

a. Manually drive the rod to position 00.

b. Initiate an individual rod scram.

c. Isolate the HCU with the rod at its present position.

d. Initiate a manually reactor scram.

QUESTION: 093 (1.00)

Unit 3 is conducting a power ascension with control rod withdrawal and recirculation flow increases when the operator discovers a control rod out of its expected position. Plant conditions are as follows:

- one rod is withdrawn 3 even notches beyond its designated position
- turbine generator output = 575 MWe

Select the immediate action that the operator is directed to take in accordance with DOA 300-12, Mispositioned Control Rod.

a. Continue power ascension after returning the rod to its insequence position.

b. Continue power ascension by using recirculation flow increases.

c. Reduce reactor power to decrease turbine generator load to 375 MWe.

d. Reduce reactor power to decrease turbine generator load to 525 MWe.

QUESTION: 094 (1.00)

Unit 2 is operating at 100% rated power when a spurious scram on RPS Channel A occurs. The operator observes the following:

- the indicating lights for scram solenoid groups A1, A2, and A3 are EXTINGUISHED
- the indicating lights for scram solenoid group for A4 is ILLUMINATED.

Select the percentage of control rods that will insert into the core if the operator inadvertently depresses the RPS Channel B manual scram button while implementing DOA 0500-2, Partial 1/2 or Full Scram Actuation?

a. 100%

b. 75%

c. 50%

d. 25%

QUESTION: 095 (1.00)

Unit 2 is operating at 75% rated power when a failure of the feedwater level controller results in an increasing reactor water level.

Select the methods that the operator can use to control reactor level in accordance with DOA 600-1, Transient Level Control, from the following:

1. Manually position the FRV.
2. Throttle flow with the FRV isolation valves.
3. Adjust reactor power with control rods.
4. Start and stop a reactor feed pump.

a. 1, 2, 3

b. 2, 3, 4

c. 1, 3, 4

d. 1, 2, 4

QUESTION: 096 (1.00)

Unit 3 is operating at 100% rated power.

Select the condition that requires the operators to immediately isolate the Isolation Condenser (IC).

a. IC vent radiation level is 1 mr/hr.

b. IC vent radiation level is 7 mr/hr.

c. IC shell side water level is 7 feet 2 inches.

d. IC shell side water level is 4 feet 8 inches.

QUESTION: 097 (1.00)

Unit 2 is operating at 100% rated power when multiple Feed Regulating Station high vibration alarms are received and feedwater flow oscillations are observed.

DOA 3200-1, Feedwater System High Vibration, directs the operator to maintain feedwater flow for not longer than _____ seconds to restore reactor level above _____ inches.

a. 15, +15

b. 15, 0

c. 60, +15

d. 60, 0

(********** END OF EXAMINATION **********)

ANSWER: 001 (1.00)

a. one (1)

b. one (1)

REFERENCE:

DFP 800-1, Master Refueling Procedure, Rev 17 pp 6 and 7. Step E.7.a and b

KA 295023G010 3.8/3.9

295023G010 ..(KA's)

ANSWER: 002 (1.00)

c, or d.

REFERENCE:

Print M-26
Lesson Plan, Nuclear Boiler Instrumentation, Figure 3,
Objective 11
DOA 6800-1, pp 6 & 8

KA 295003A202 4.2/4.3

295003A202 ..(KA's)

ANSWER: 003 (1.00)

d

REFERENCE:

DOP 9900-7, Process Computer, Control Rod Positions (OD-7) pp 2
Process Computer Learning Objective #3
KA 294001A115 3.2/3.4

294001A115 ..(KA's)

ANSWER: 004 (1.00)

c

REFERENCE:

CECO Protection Radiation Standards. pp 34
KA 294001K103

294001K104 ..(KA's)

ANSWER: 005 (1.00)

d

REFERENCE:

DAP 9-13, Procedural Response to Abnormal Conditions. pp 5
KA 294001A109 3.3/4.2 KA 294001A111 3.3/4.3

294001A109 ..(KA's)

ANSWER: 006 (1.00)

d

REFERENCE:

DAP 7-11, Drywell Entry. pp 1
KA 294001K114 3.2/3.4

294001K114 ..(KA's)

ANSWER: 007 (2.00)

a 1, 2, 4, 5

b 1

c 2, 3, 7

d 8 (~~10~~ 9 required ~~0.20~~ 0.22 each) Proportional grading applies.

REFERENCE:

DAP 7-5, Operating Logs and Records. pp 2 through 8
KA 294001A106 3.4/3.6 294001K102 3.9/4.5

294001A106 ..(KA's)

ANSWER: 008 (1.00)

c

REFERENCE:

DAP 7-21, Station Policy on Reactor Operator and Senior Reactor Operator Manning Levels and Overtime. pp 3
KA 294001A103 2.7/3.7 294001A109 3.3/4.2

294001A109 ..(KA's)

ANSWER: 009 (1.00)

d

REFERENCE:

DAP 7-27, Independent Verification. pp 1 and 2
KA 294001K101 3.7/3.7

294001K101 ..(KA's)

ANSWER: 010 (1.00)

c

REFERENCE:

DAP 7.2
KA 294001A106 3.4/3.6

294001A106 ..(KA's)

ANSWER: 011 (1.00)

b

REFERENCE:

DAP 7-3 pp 1
KA 294001A103 3.7

294001K102 ..(KA's)

ANSWER: 012 (1.00)

c

REFERENCE:

DAP 9-11, Procedure Use and Adherence. pp 3 and 4
KA 294001A102 4.2/4.2

294001A102 ..(KA's)

ANSWER: 013 ~~(1.00)~~ deleted

d

REFERENCE:

DOP 400-1,Reactor Manual Control System Operation Section E.1
KA 201002K406 3.5/3.5
201002A402 3.5/3.5
201002G001 3.8/3.8

201002G001 ..(KA's)

ANSWER: 014 (1.00)

a 4

b 3

c 5

d 3

REFERENCE:

Dresden Lesson Plan, Low Pressure Coolant Injection. Figure 8
KA 262001K302 3.8

262001K302 ..(KA's)

ANSWER: 015 (1.00)

d

REFERENCE:

Dresden Lesson Plan, AC Electrical Distribution Section 3.C.3
Learning Objective 11

KA 262002K401 3.1/3.4

262002K401 ..(KA's)

ANSWER: 016 (1.00)

d

REFERENCE:

Dresden Lesson Plan, Isolation Condenser. pp 16
Learning Objective #13
KA 207000K405 4.0/4/2
207000A101 3.7/3.8
207000A102 3.2/3.4
207000A201 4.2/4.5

207000K405 ..(KA's)

ANSWER: 017 (1.00)

b

REFERENCE:

Dresden Lesson Plan, High Pressure Coolant Injection. pp 20
Learning Objective 10.g
KA 206000K201

206000K201 ..(KA's)

ANSWER: 018 (1.00)

d, OR a

REFERENCE:

Dresden Lesson Plan, Nuclear Boiler Instrumentation pp 33
Learning Objective #1, 3, and 4
KA 202001K127 4.1/4.3
202001K414 4.0/4.1

202001K414 ..(KA's)

ANSWER: 019 (1.00)

a

REFERENCE:

Dresden Lesson Plan, Intermediate Range Monitor. pp 17
Learning Objective # 9
KA 215003K402 4.0/4.0
215003A204 3.7/3.8

215003K402 ..(KA's)

ANSWER: 020 (1.00)

c

REFERENCE:

Dresden Lesson Plan, Average Power Range Monitor. pp 7 and 8
Learning Objectives 5.b, 9, 10 and 11
KA 215005K104 3.6/3.6
215005K402 3.2/3.2
215005K603 3.1/3.3

215005K603 ..(KA's)

ANSWER: 021 (1.00)

a

REFERENCE:

DGP 1-1. pp 14 caution
KA 256000A110 3.1/3.1
256000G010 3.1/2.9
256000A413 3.3/3.4
241000K102 3.9/4.1
241000K106 3.8/3.9
241000K127 3.1/3.1
241000K301 4.1/4.1

256000A110 ..(KA's)

ANSWER: 022 (1.00)

b

REFERENCE:

Dresden Lesson Plan, Control Rod Blade and Drive Mechanism. pp 23
Learning Objective #1 and 3
KA 201001K303 3.1/3.2
201001K405 3.6/3.6

201001K405 ..(KA's)

ANSWER: 023 (1.00)

a. 1

b. 5

c. 2

~~d. 2~~ (~~4~~ 3 required at ~~0.25~~ 0.33 each)

REFERENCE:

DOA 3300-2 pp 1
KA 239001K608

239001K608 ..(KA's)

ANSWER: 024 (1.00)

d

REFERENCE:

Dresden Lesson Plan, Main Steam System. pp 8
KA 239001K125 3.5/3.5
239001K316 3.6/3.6

239001K125 ..(KA's)

ANSWER: 025 (1.00)

d

REFERENCE:

Dresden Lesson Plan, Main Steam System. pp 10
KA 239001K315 3.5/3.5
239001K401 3.8/3.8
239001K405 3.1/3.2

239001K405 ..(KA's)

ANSWER: 026 (1.00)

b

REFERENCE:

Dresden Lesson Plan, Rod Block Monitor. pp 8 and 9
Learning Objective 5.b
KA 215002K102 3.2/3.1
215002K401 3.4/3.5
215002A304 3.6/3.5
215002G004 3.3/3.4

215002K102 ..(KA's)

ANSWER: 027 (1.00)

d

REFERENCE:

Dresden Lesson Plan, Traversing Incore Probe. pp 24
Learning Objective 2.d, 6, 7, and 8
KA 215001K401 3.4/3.5
215001K604 3.1/3.4

215001K401 ..(KA's)

ANSWER: 028 (1.00)

b

REFERENCE:

Dresden Lesson Plan, Standby Liquid Control System. pp 13
Learning Objective #3
KA 211000A104 3.6/3.7
211000A206 3.1/3.3

211000A104 ..(KA's)

ANSWER: 029 (1.00)

d

REFERENCE:

Dresden Lesson Plan, Standby Liquid Control. pp 19
Learning Objective # 1
KA 211000K301 4.3/4.4

211000K301 ..(KA's)

ANSWER: 030 (1.00)

d

REFERENCE:

Dresden Lesson Plan Rod Worth Minimizer. pp 5
Learning Objective #1
KA 201006K104 3.1/3.2
201006K404 3.4/3.5
201006K502 2.9/3.0
201006G001 3.5/3.8

201006K104 ..(KA's)

ANSWER: 031 (1.00)

c

REFERENCE:

Dresden Lesson Plan, Reactor Manual Control and RPIS System. pp 8
Learning Objective # 5
KA 201002K405 3.3/3.3
201002A402 3.5/3.5
201002G001 3.8/3.8

201002K405 ..(KA's)

ANSWER: 032 (1.00)

c

REFERENCE:

Dresden Lesson Plan, Reactor Pressure Vessel and Internals. pp 25
Learning Objective 10
KA 290002K101 3.2/3.2
290002K102 3.2/3.2
290002K402 3.1/3.2

290002K402 ..(KA's)

ANSWER: 033 (1.00)

a. 3

b. 5, 7

c. 1

d. 8 (5 required at 0.25 each)

REFERENCE:

Dresden Lesson Plan, Reactor Manual Control and RPIS System. pp 4
Learning Objective 2.b
KA 201002G008 3.6/3.4

201002G008 ..(KA's)

ANSWER: 034 (1.00)

d

REFERENCE:

Dresden Lesson Plan Diesel Generators. pp 9 and 12
Learning Objectives #4 and 7
KA 264000K401 3.5/3.7
264000K402 4.0/4.2

264000K402 ..(KA's)

ANSWER: 035 (1.00)

c

REFERENCE:

Dresden Lesson Plan, Source Range Monitoring System. pp 19
Learning Objective 7.b and 9
KA 215004K401 3.7/3.7
215004A101 3.0/3.1
215004A404 3.2/3.2

215004K401 ..(KA's)

ANSWER: 036 (2.00)

a 1, 5, ~~6~~ 4

b 4, 5, 6, ~~7~~

c 2, ~~4~~, ~~8~~ 3

d 2, ~~4~~ 3

~~e 3~~

(10 required at 0.20 each) Proportional grading will be applied.

REFERENCE:

Dresden Lesson Plan, Process Radiation Monitoring. pp 4, 6, 9, and 17
Learning Objective 5 and 7
KA 272000K101 3.6/3.8
272000K102 3.2/3.5
272000K103 3.3/3.6
272000K106 3.2/3.3
272000K108 3.6/3.9
272000K110 3.4/3.6
272000K111 2.1/2.4
272000K112 3.1/3.2
272000K402 3.7/4.1

272000K106 ..(KA's)

ANSWER: 037 (1.00)

a

REFERENCE:

Dresden Lesson Plan, Automatic Depressurization System. pp 6
Learning Objective 5
KA 218000K106 3.9/3.9
218000K403 3.8/4.0
218000K501 3.8/3.8

218000K501 ..(KA's)

ANSWER: 038 (1.00)

d

REFERENCE:

Dresden Lesson Plan, Feedwater Level Control System. pp 7
Learning Objective 10
KA 259002K106 3.0/3.1
259002K413 3.5/3.6
259002K601 3.2/3.2
259002A307 3.5/3.6

259002K413 ..(KA's)

ANSWER: 039 (1.00)

d

REFERENCE:

Dresden Lesson Plan, Secondary Containment. pp 5
Learning Objective 4.a
KA 290001K101 3.3/3.5
290001K104 3.7/3.9
290001K402 3.4/3.5

290001K402 ..(KA's)

ANSWER: 040 (1.00)

a

REFERENCE:

Dresden Lesson Plan,Recirculation Flow Control System. pp 29
Learning Objective 4.f and 4,g
KA 202002K112 3.7/3.9
202002K402 3.0/3.0
202002K405 3.1/3.4
202002A407 3.3/3.2

202002K112 ..(KA's)

ANSWER: 041 (1.00)

b

REFERENCE:

Dresden Lesson Plan, Main Turbine pp 9 and 10
Learning Objective 4.c
KA 245000A201
245000A205
245000A301
245000G007

245000G007 ..(KA's)

ANSWER: 042 (1.00)

a

REFERENCE:

Dresden Lesson Plan,EHC Pressure Control and Logic System. pp 6, 8
Learning Objective # 9
KA 245000K108 3.4/3.5
245000K302 3.9/4.0
245000K308 3.7/3.8

245000K302 ..(KA's)

ANSWER: 043 (2.00)

a 1

b 3

c 2

d 3

e 5

f 6

g 7

h 3

i 8

j 4 (10 answers required at 0.20 each)

REFERENCE:

Dresden Lesson Plan, Reactor Protection System. Figure 7
Learning Objective 4.c and 7
KA 212000K108 3.0/3.1
212000K115 3.8/3.9
212000K408 4.2/4.2

212000K108 ..(KA's)

ANSWER: 044 (1.00)

d

REFERENCE:

Dresden Lesson Plan, Fuel Pool Cooling and Cleanup System. pp 7
KA 233000A202 3.1/3.3
233000G007 3.2/3.3

233000G007 ..(KA's)

ANSWER: 045 (1.00)

a 2

b 4

c 6

d 1 (4 required at 0.25 each)

REFERENCE:

Dresden Lesson Plan, Reactor Water Cleanup System. pp 18
Learning Objective #8
KA 204000K111 3.5/3.7
204000K404 3.5/3.6

204000K404 ..(KA's)

ANSWER: 046 (1.00)

c

REFERENCE:

Dresden Lesson Plan, Shutdown Cooling System. pp 6
Learning Objective # 7
KA 205000A101 3.3/3.2
205000A110 3.0/2.9
205000A301 3.2/3.1
205000G010 3.2/3.3

205000A101 ..(KA's)

ANSWER: 047 (1.00)

c

REFERENCE:

Dresden Lesson Plan, Core Spray. pp 11
Learning Objective 5.b
KA 209001K404 3.0/3.2
209001A205 3.3/3.6
209001A306 3.6/3.5

209001A205 ..(KA's)

ANSWER: 048 (1.00)

d

REFERENCE:

Dresden Lesson Plan, Core Spray. pp 12
Learning Objective # 7
KA 209001K114 3.7/3.8
209001A301 3.6/3.6
209001A403 3.7/3.6

209001A301 ..(KA's)

ANSWER: 049 (1.00)

b

REFERENCE:

Dresden Lesson Plan, Low Pressure Coolant Injection. pp 20 and 21
Learning Objective # 13
KA 203000K410 3.9/4.1
203000K411 4.0/4.0
203000A307 4.2/4.6
203000G007 4.2/4.3

203000A307 ..(KA's)

ANSWER: 050 (1.00)

b.

REFERENCE:

Dresden Lesson Plan, Low Pressure Coolant Injection. pp 9
KA 203000K403 3.2/3.3
203000A209 3.3/3.4

203000K403 ..(KA's)

ANSWER: 051 (1.00)

c.

REFERENCE:

DOA 7500-1, SBGT Fan Trip
Lesson Plan, Containment Systems
Learning Objective 7.

KA 261000A302 3.2/3.1

261000A302 ..(KA's)

ANSWER: 052 (1.00)

a. 4

b. 6

c. 4, 5

d. 4, 5 (6 required at 0.17 each)

REFERENCE:

Dresden Lesson Plan, Fuel Handling and Refueling Equipment. pp 7 and 8
Learning Objective #2
KA 234000K502 3.1/3.7

234000K502 ..(KA's)

ANSWER: 053 (1.00)

b

REFERENCE:

DOP 700-5, Rod Block Monitor Section F.4.a
Learning Objective 7.f
KA 215002K103 3.2/3.2
215002K401 3.4/3.5
215002G007 3.8/3.8

215002K401 ..(KA's)

ANSWER: 054 (1.00)

c

REFERENCE:

Dresden Lesson Plans, Secondary Containment System pp 8 and 9 and Primary Containment System. pp 7
Learning Objective # 2 and 3
KA 223001K406 3.1/3.3
223001K501 3.1/3.3

223001K406 ..(KA's)

ANSWER: 055 (2.00)

a. 1, 7, 8, 14

b. 2, 3, 6, 9, 10, 17, 18

c. 2, 11, 12, 16

d. 4, 13

e. 5, 8, 15 (20 required 0.10 each)

REFERENCE:

Dresden Lesson Plan, Primary Containment Systems. pp 25 -29 and Table I
Learning Objective # 7
KA 223001K101 3.7/3.9
223001K102 3.6/3.8

223001K101 ..(KA's)

ANSWER: 056 (1.00)

a.

REFERENCE:

Lesson Plan, DEOPs, RPV Flooding 400-1, Section II.A.6 and II.B.3, Objective 3

KA 295031A203 4.2/4.2 295031K202 3.8/3.9 295031K216 4.1/4.1

295031A203 ..(KA's)

ANSWER: 057 (1.00)

c.

REFERENCE:

Lesson Plan, DEOP Failure to Scram 400-5, Section II.A.3, Objective 4.

KA 295015K103 3.8/3.9

295015K103 ..(KA's)

ANSWER: 058 (1.00)

a.

REFERENCE:

Lesson Plan, Offgas, Objective 11.
DGA-16, Coolant High Activity/Fuel Element Failure, pp 3

KA 295017A204 3.6/4.3 295017A201 2.9/4.2

295017A204 ..(KA's)

ANSWER: 059 (1.00)

c.

REFERENCE:

Lesson Plan, Offgas, pp 22, Objective 8
DGA-16, Coolant High Activity/Fuel Element Failure, pp 1

KA 295017K301 3.6/3.9 295017A102 3.5/3.7

295017K301 ..(KA's)

ANSWER: 060 (1.00)

c.

REFERENCE:

Unit 2/3 DSSP 100-CR
KA 294001K113 3.2/3.6

294001K113 ..(KA's)

ANSWER: 061 (1.00)

b.

REFERENCE:

Lesson Plan, DEOP Failure to Scram 400-5, section II.C.9
DEOP 400-5

KA 295037A203 4.3/4.4 295037K204 4.4/4.5 295037A104 4.5/4.5

295037A203 ..(KA's)

ANSWER: 062 (1.00)

a.

REFERENCE:

Lesson Plan, Recirculation System, pp 53, Objective 12

KA 295014K211 3.6/3.7

295014K211 ..(KA's)

ANSWER: 063 (1.00)

d, OR c

REFERENCE:

Lesson Plan, EHC Pressure Control and Logic System, Fig. 4

KA 295007K201 3.5/3.7

295007K201 ..(KA's)

ANSWER: 064 (1.00)

d.

REFERENCE:

Lesson Plan, DEOP Primary Containment Control, Section II.D.4&5, Objective 11

KA 295010G012 3.8/4.4

295010G012 ..(KA's)

ANSWER: 065 (1.00)

a.

REFERENCE:

Lesson Plan, DEOP Reactor Control series 100, Section II.D.6, Objective 4.b&c
DEOP 100, Reactor Control
DEOP 200-1, Primary Containment Control

KA 295030K204 3.7/3.8 295030K201 3.8/3.9 295030K203 3.8/3.9

295030K204 ..(KA's)

Deleted

ANSWER: ~~066~~ (1.00)

~~d.~~

REFERENCE:

Lesson Plan, DEOP Steam Cooling Series 400-3, Section II.B, Objective 4

KA 295031G012 3.9/4.5 295031K208 4.2/4.3

295031G012 ..(KA's)

ANSWER: 067 (1.00)

~~d.~~ b

REFERENCE:

Lesson Plan, DEOP Failure to Scram Series 400-5, Section II.A.5, Objective 9
DEOP Failure to Scram

KA 295015G007 3.4/3.5

295015G007 ..(KA's)

ANSWER: 068 (1.00)

a.

REFERENCE:

Lesson Plan, DEOP Failure to Scram Series 400-5, Section II.A.6, Objective 2
DEOP 400-5, Failure to Scram

KA 295037K209 4.0/4.2 295037A202 4.1/4.2

295037K209 ..(KA's)

ANSWER: 069 (1.00)

b.

REFERENCE:

Lesson Plan, DEOP Failure to Scram 400-5, Section II.A.12, Objective 7, 10, 11
DEOP 400-5, Failure to Scram

KA 295037K104 3.4/3.6 295037K304 3.2/3.7

295037K104 ..(KA's)

ANSWER: 070 (1.00)

b.

REFERENCE:

Lesson Plan, DEOP 300-2, Radioactive Release Control, Section III.C.2, Objective 8

KA 295017K302 3.3/3.5

295017K302 ..(KA's)

ANSWER: 071 (1.00)

d.

Deleted

REFERENCE:

DOA 1000-1, RHR Alternatives, pp 4
KA 295021A104 3.7/3.7

295021A104 ..(KA's)

ANSWER: 072 (1.00)

c.

REFERENCE:

DOA 202-1, Reactor Recirculation Pump Trip pp 1 and 4
KA 295001A101 3.5/3.6

295001A101 ..(KA's)

ANSWER: 073 (1.00)

c.

REFERENCE:

DEOP 200-1 Primary Containment Control Detail 200-1-A
Lesson Plan Nuclear Boiler Instrumentation pp 1-11, 19,
Objective 10

KA 295028A203 3.7/3.9 295028K203 3.6/3.8

295028A203 ..(KA's)

ANSWER: 074 (1.00)

d.

REFERENCE:

Lesson Plan, DEOP Secondary Containment Control Series 300,
Section I.A, Objective 1
NRC GE EOPM, Emergency Operating Procedures Manual, pp 5-2
DEOP 300-1

KA 295033K103 3.9/4.2

295033K103 ..(KA's)

ANSWER: 075 (1.00)

d.

REFERENCE:

Lesson Plan, Secondary Containment Control/300s, Objective 9
DEOP 300-1, Secondary Containment Control

KA 295036G012 3.5/3.9 295036A202 3.1/3.1

295036G012 ..(KA's)

ANSWER: 076 (1.00)

__6__ a.

__2__ b.

__5__ c.

__4__ d. (4 required at 0.25 ea.)

REFERENCE:

DOA 500-1, Inadvertent Entry into Unstable Power to Flow Region, pp 1
DOA 3700-1, Loss of Cooling by RBCCW, pp1

KA 295018G010 3.4/3.3 295018K101 3.5/3.6 295018K202 3.4/3.6

295018G010 ..(KA's)

ANSWER: 077 (1.00)

b.

REFERENCE:

Lesson Plan Instrument Air System, pp 20, Objective 10.
DOA 4700-1, Instrument Air System Failure, pp 4 and 5

KA 295019K212 3.3/4.4 295019K201 3.8/3.9 295019K205 3.4/3.4

295019K212 ..(KA's)

ANSWER: 078 (1.00)

d.

REFERENCE:

DOA 5600-1, Turbine Trip, pp 2

KA 295005G010 3.8/3.6

295005G010 ..(KA's)

ANSWER: 079 (1.00)

a.

REFERENCE:

Lesson Plan, Batteries,pp 4, Objective 7
DOA 6900-1, DC Electrical System Failure, pp 2

KA 295004A102 3.8/4.1

295004A102 ..(KA's)

ANSWER: 080 (1.00)

c, OR b

REFERENCE:

Lesson Plan, CRDH System, Objective 15
DOA 300-1, CRD System Failure, pp 3

KA 295022K301 3.7/3.9

295022K301 ..(KA's)

ANSWER: 081 (1.00)

c.

REFERENCE:

DOA 500-1, Inadvertent Entry into Unstable Power to Flow Region, pp 1

KA 295001G010 3.8/3.7

295001G010 ..(KA's)

ANSWER: 082 (1.00)

c.

REFERENCE:

Lesson Plan, DEOP Containment Control 200 series, Section E.7, Objective 3e
DEOP 200-1, Containment Control

KA 295029K206 3.4/3.5

295029K206 ..(KA's)

ANSWER: 083 (1.00)

c.

REFERENCE:

Lesson Plan, Feedwater and Condensate, pp 34, Objective 10

KA 295008K304 3.3/3.5

295008K304 ..(KA's)

ANSWER: 084 (1.00)

b.

REFERENCE:

Lesson Plan, DEOP Secondary Containment Series 300, Section II.A, Objective 1 and 2
DEOP 300-1, Secondary Containment Control

KA 295035K201 3.6/3.6 295035K202 3.6/3.8 295035K203 3.3/4.1
295035K204 3.3/3.7

295035K201 ..(KA's)

ANSWER: 085 (1.00)

c.

REFERENCE:

Lesson Plan, DEOP Primary Containment Flooding Series 400-4, Section II.C.3, Objective 2
DEOP 400-4, Primary Containment Flooding Series

KA 295029G007 3.6/3.9

295029G007 ..(KA's)

ANSWER: 086 (1.00)

b.

REFERENCE:

Lesson Plan, DEOP Primary Containment Flooding Series 400-4, Section II.C.4, Objective 1.b
DEOP 400-4, Primary Containment Flooding Series

KA 295029G007 3.6/3.9

295029G007 ..(KA's)

ANSWER: 087 (1.00)

__3__ a.

__7__ b.

__5__ c.

__1__ d. (4 required at 0.25 ea.)

REFERENCE:

Lesson Plan, APRMs, pp 11
Tech Spec Bases pp 3/4.1-12&13 and 3/4.2-29

KA 295006G004 3.3/4.2

295006G004 ..(KA's)

deleted

ANSWER: 088 (1.00)

~~b.~~

REFERENCE:

Lesson Plan, AC Electrical Power Distribution, pp 9,10, & 31 & Fig. 2, Objective 12
Tech Spec 3.0.B and 3.5.A.4

KA 295003G003 3.2/4.1

295003G003 ..(KA's)

ANSWER: 089 (1.00)

a.

REFERENCE:

Lesson Plan, DEOP Primary Containment Control, Section II.E.1, Objective 18

KA 294001K115 3.4/3.8

294001K115 ..(KA's)

ANSWER: 090 (1.00)

b.

REFERENCE:

Lesson Plan, DEOP Primary Containment Control, Section II.E.4, Objective 18

KA 294001K115 3.4/3.8

294001K115 ..(KA's)

ANSWER: 091 (1.00)

d.

REFERENCE:

Lesson Plan
NRC GE EOPM, Emergency Operating Procedures Manual, pp A-4

KA 294001K115 3.4/3.8

294001K115 ..(KA's)

ANSWER: 092 (1.00)

a.

REFERENCE:

DOA 300-5, Inoperable or Failed Control Rod Drives, pp 2

KA 201003G014 3.7/3.3

201003G014 ..(KA's)

ANSWER: 093 (1.00)

d.

REFERENCE:

DOA 300-12, Mispositioned Control Rod, pp 1&2

KA 201003G014 3.7/3.3

201003G014 ..(KA's)

ANSWER: 094 (1.00)

b.

REFERENCE:

DEOP 0500-2, Partial 1/2 or Full Scram Actuation, pp 2

KA 212000K106 3.5/3.6

212000K106 ..(KA's)

ANSWER: 095 (1.00)

d.

REFERENCE:

DOA 600-1, Transient Level Control, pp 2

KA 259002G014 3.9/3.7

259002G014 ..(KA's)

ANSWER: 096 (1.00)

b.

REFERENCE:

Lesson Plan, Isolation Condenser, pp 8.
DOA 1300-1, Isolation Condenser Tube Leak, pp 1

KA 207000G014 4.0/4.0

207000G014 ..(KA's)

ANSWER: 097 (1.00)

c.

REFERENCE:

DEOP 3200-1, Feedwater System High Vibration, pp 1

KA 259001G014 3.7/3.5

259001G014 ..(KA's)

(********** END OF EXAMINATION **********)

A N S W E R S H E E T

Multiple Choice (Circle or X your choice)

If you change your answer, write your selection in the blank.

001 Fill in Correct response ~~match with selected number~~ in the blank

a _____

b _____

002 a b c d _____

003 a b c d _____

004 a b c d _____

005 a b c d _____

006 a b c d _____

007 match with selected number in the blank

a _____

b _____

c _____

d _____

008 a b c d _____

009 a b c d _____

010 a b c d _____

011 a b c d _____

012 a b c d _____

013 a b c d _____

014 match with selected number in the blank

a _____

b _____

c _____

d _____

015 a b c d _____

A N S W E R S H E E T

Multiple Choice (Circle or X your choice)

If you change your answer, write your selection in the blank.

016	a	b	c	d	_____
017	a	b	c	d	_____
018	a	b	c	d	_____
019	a	b	c	d	_____
020	a	b	c	d	_____
021	a	b	c	d	_____
022	a	b	c	d	_____

023 match with selected number in the blank

a _____

b _____

c _____

d _____

024	a	b	c	d	_____
025	a	b	c	d	_____
026	a	b	c	d	_____
027	a	b	c	d	_____
028	a	b	c	d	_____
029	a	b	c	d	_____
030	a	b	c	d	_____
031	a	b	c	d	_____
032	a	b	c	d	_____

033 match with selected number in the blank

a _____

b _____

c _____

A N S W E R S H E E T

Multiple Choice (Circle or X your choice)

If you change your answer, write your selection in the blank.

d _____

034 a b c d _____

035 a b c d _____

036 match with selected number in the blank

a _____

b _____

c _____

d _____

e _____

f _____

037 a b c d _____

038 a b c d _____

039 a b c d _____

040 a b c d _____

041 a b c d _____

042 a b c d _____

043 match with selected number in the blank

a _____

b _____

c _____

d _____

e _____

f _____

g _____

h _____

A N S W E R S H E E T

Multiple Choice (Circle or X your choice)

If you change your answer, write your selection in the blank.

i _____

j _____

044 a b c d _____

045 match with selected number in the blank

a _____

b _____

c _____

d _____

046 a b c d _____

047 a b c d _____

048 a b c d _____

049 a b c d _____

050 a b c d _____

051 a b c d _____

052 match with selected number in the blank

a _____

b _____

c _____

d _____

053 a b c d _____

054 a b c d _____

055 match with selected number in the blank

a _____

b _____

c _____

A N S W E R S H E E T

Multiple Choice (Circle or X your choice)

If you change your answer, write your selection in the blank.

d _____

e _____

056	a	b	c	d	_____
057	a	b	c	d	_____
058	a	b	c	d	_____
059	a	b	c	d	_____
060	a	b	c	d	_____
061	a	b	c	d	_____
062	a	b	c	d	_____
063	a	b	c	d	_____
064	a	b	c	d	_____
065	a	b	c	d	_____
066	a	b	c	d	_____
067	a	b	c	d	_____
068	a	b	c	d	_____
069	a	b	c	d	_____
070	a	b	c	d	_____
071	a	b	c	d	_____
072	a	b	c	d	_____
073	a	b	c	d	_____
074	a	b	c	d	_____
075	a	b	c	d	_____

076 match with selected number in the blank

a _____

b _____

A N S W E R S H E E T

Multiple Choice (Circle or X your choice)

If you change your answer, write your selection in the blank.

c _____

d _____

077	a	b	c	d	_____
078	a	b	c	d	_____
079	a	b	c	d	_____
080	a	b	c	d	_____
081	a	b	c	d	_____
082	a	b	c	d	_____
083	a	b	c	d	_____
084	a	b	c	d	_____
085	a	b	c	d	_____
086	a	b	c	d	_____

087 match with selected number in the blank

a _____

b _____

c _____

d _____

088	a	b	c	d	_____
089	a	b	c	d	_____
090	a	b	c	d	_____
091	a	b	c	d	_____
092	a	b	c	d	_____
093	a	b	c	d	_____
094	a	b	c	d	_____
095	a	b	c	d	_____

A N S W E R S H E E T

Multiple Choice (Circle or X your choice)

If you change your answer, write your selection in the blank.

096	a	b	c	d	_____
097	a	b	c	d	_____

(********** END OF EXAMINATION **********)

A N S W E R K E Y

001 match with selected number in the blank

a 1

b 1

002 c or d

003 d

004 c

005 d

006 d

007 match with selected number in the blank

a 1, 2, 4, 5

b 1

c 2, 3, 7

d 8

008 c

009 d

010 c

011 b

012 c

~~013 d~~ deleted

014 match with selected number in the blank

a 4

b 3

c 5

d 3

015 d

A N S W E R K E Y

016 d

017 b

018 a, or d

019 a

020 c

021 a

022 b

023 match with selected number in the blank

a 1

b 5

c 2

~~d 2~~ m

024 d

025 d

026 b

027 d

028 b

029 d

030 d

031 c

032 c

033 match with selected number in the blank

a 3

b 5, 7

c 1

A N S W E R K E Y

d 8

034 d

035 c

036 match with selected number in the blank

a 1, 4, 5

b 4, 5, 6

c 2, 3

d 2, 3

~~g~~ in

~~e 3~~ in

037 a

038 d

039 d

040 a

041 b

042 a

043 match with selected number in the blank

a 1

b 3

c 2

d 3

e 5

f 6

g 7

h 3

ANSWER KEY

i 8

j 4

044 d

045 match with selected number in the blank

a 2

b 4

c 6

d 1

046 c

047 c

048 d

049 b

050 b

051 c

052 match with selected number in the blank

a 4

b 6

c 4,5

d 4,5

053 b

054 c

055 match with selected number in the blank

a 1,7,8,14

b 2,3,6,9,10,17,18

c 2,11,12,16

ANSWER KEY

d 4, 13

e 5, 8, 15

056 a

057 c

058 a

059 c

060 c

061 b

062 a

063 c, or d

064 d

065 a

~~066 d~~ deleted

067 ~~a~~ b

068 a

069 b

070 b

~~071 d~~ m Deleted

072 c

073 c

074 d

075 d

076 match with selected number in the blank

a. 6

b. 2

A N S W E R K E Y

c _ 5

d _ 4

077 b

078 d

079 a

080 c, or b

081 c

082 c

083 c

084 b

085 c

086 b

087 match with selected number in the blank

_ 3

_ 7

_ 5

_ 1

~~088 b~~ deleted

089 a

090 b

091 d

092 a

093 d

094 b

095 d

A N S W E R K E Y

096	b
097	c

(********** END OF EXAMINATION **********)

QUESTION	VALUE	REFERENCE
001	1.00	16726
002	1.00	17550
003	1.00	9000059
004	1.00	9000060
005	1.00	9000061
006	1.00	9000062
007	2.00	9000063
008	1.00	9000064
009	1.00	9000065
010	1.00	9000066
011	1.00	9000067
012	1.00	9000068
013	1.00	9000069
014	1.00	9000070
015	1.00	9000071
016	1.00	9000072
017	1.00	9000073
018	1.00	9000074
019	1.00	9000075
020	1.00	9000076
021	1.00	9000077
022	1.00	9000078
023	1.00	9000079
024	1.00	9000080
025	1.00	9000081
026	1.00	9000082
027	1.00	9000083
028	1.00	9000084
029	1.00	9000085
030	1.00	9000086
031	1.00	9000087
032	1.00	9000088
033	1.00	9000089
034	1.00	9000090
035	1.00	9000091
036	2.00	9000092
037	1.00	9000093
038	1.00	9000094
039	1.00	9000095
040	1.00	9000096
041	1.00	9000097
042	1.00	9000098
043	2.00	9000099
044	1.00	9000100
045	1.00	9000101
046	1.00	9000102
047	1.00	9000103
048	1.00	9000104
049	1.00	9000105
050	1.00	9000106
051	1.00	9000107
052	1.00	9000108
053	1.00	9000109
054	1.00	9000110

QUESTION	VALUE	REFERENCE
055	2.00	9000111
056	1.00	9000112
057	1.00	9000113
058	1.00	9000115
059	1.00	9000116
060	1.00	9000117
061	1.00	9000118
062	1.00	9000119
063	1.00	9000120
064	1.00	9000121
065	1.00	9000122
066	1.00	9000123
067	1.00	9000124
068	1.00	9000125
069	1.00	9000126
070	1.00	9000127
071	1.00	9000128
072	1.00	9000129
073	1.00	9000130
074	1.00	9000131
075	1.00	9000132
076	1.00	9000133
077	1.00	9000134
078	1.00	9000135
079	1.00	9000136
080	1.00	9000137
081	1.00	9000138
082	1.00	9000139
083	1.00	9000140
084	1.00	9000141
085	1.00	9000142
086	1.00	9000143
087	1.00	9000144
088	1.00	9000145
089	1.00	9000146
090	1.00	9000147
091	1.00	9000148
092	1.00	9000149
093	1.00	9000150
094	1.00	9000151
095	1.00	9000152
096	1.00	9000153
097	1.00	9000154

	101.00	

	101.00	