Commonwealth Edison
1400 Opus Place
Downers Grove, Illinois 60515

July 23, 1990

Dr. Thomas E. Murley, Director
Office of Nuclear Reactor Regulation
U.S. Nuclear Regulatory Commission
Washington, D.C. 20555

ATTN: Document Control Desk

Subject: Dresden Nuclear Power Station Units 2 and 3
Request for NRR Waiver of Compliance to
Facility Operating Licenses DPR-19 and DPR-25
NRC Docket Nos. 50-237 and 50-249

Reference: Teleconference of July 20, 1990, between
Commonwealth Edison and NRC Staffs.

Dr. Murley:

The purpose of this letter is to confirm the conclusions of a teleconference between Commonwealth Edison and the NRC Staffs on July 20, 1990, during which Commonwealth Edison requested an NRR Waiver of Compliance to the Technical Specification primary containment leak rate testing requirements.

Following the validation of concerns which were identified during a self-assessment of the Dresden Local Leak Rate Test Program on July 20, 1990, Dresden Units 2 and 3 initiated orderly shutdowns at 1340 hours, in accordance with Technical Specification 3.0.A. The orderly unit shutdowns proceeded until 1850 hours on July 20, 1990, at which time the verbal approval for a Temporary Waiver of Compliance was received.

Commonwealth Edison requested that the leak rate testing requirements for the specific components described in the attached documentation be extended to facilitate continued operation and the completion of corrective actions. The basis for this request is attached, and includes the following:

- A discussion of the requirements for which a waiver is requested.
- A discussion of the circumstances surrounding the situation, including the need for prompt action and a description of why the situation could not have been avoided.
- A discussion of compensatory actions.
- A evaluation of the safety significance and potential consequences of the proposed change.
- A discussion which justifies the duration of the request.

1/1

AA-2 Sub
A001

(23 pp)

- The basis for including that the request does not involve a significant hazard consideration.

- The basis for concluding that the request does not involve irreversible environmental consequences.

The request for an NRR Waiver of Compliance was reviewed and approved by the Dresden On-Site Review Committee in accordance with Company procedures.

A request for an Emergency Technical Specification amendment will be submitted by July 30, 1990, for NRC staff review and approval. The emergency request will include a Dresden-specific Probabilistic Risk Assessment.

Please direct any questions or comments regarding this submittal to M.H. Richter, Nuclear Licensing Administrator.

Very truly yours,

R. Stols
Nuclear Licensing Administrator

Milton H. Richter

M.H. Richter
Nuclear Licensing Administrator

cc: A.B. Davis, Regional Administrator - RIII
B.L. Siegel, Project Manager - NRR
S.G. DuPont, Senior Resident Inspector

lmw/ID117

ATTACHMENT A

JUSTIFICATION FOR WAIVER OF COMPLIANCE

1. DISCUSSION OF THE REQUIREMENTS FOR WHICH A WAIVER IS REQUESTED

Dresden Units 2 and 3 Technical Specifications require that primary containment integrity be routinely demonstrated in accordance with the requirements of 10 CFR 50 Appendix J (Section 4.7.A.2). During a self-assessment of the Dresden Local Leak Rate Testing Program, testing concerns were identified for the following pathways:

Dresden Unit 2

- Reactor Building Closed Cooling Water (RBCCW) inlet to primary containment
- Control Rod Drive (CRD) to Recirculation system hydrostatic test line
- Pressure Suppression Chamber Narrow Range Level transmitter

Dresden Unit 3

- RBCCW inlet to primary containment
- CRD to Recirculation system hydrostatic test line

Therefore, Commonwealth Edison requests that a waiver be granted to exclude these five pathways from the containment leakage totals. These pathways will be excluded from the calculated leakage totals for the following Technical Specification Sections:

3.7.A.2.a.(3): Maximum allowable leakage rate at the calculated peak containment internal pressure (48 psig), La

3.7.A.2.b.(2)(a): Overall integrated leakage rate for Type A tests

3.7.A.2.b.(1): Combined leakage rate for all testable penetrations and isolation valves subject to Type B and C tests (excluding Main Steam Isolation Valves).

In addition, these pathways will be excluded from Technical Specification surveillance requirement 4.7.A.2.e, which requires Type B and C tests to be conducted at the calculated peak containment internal pressure.

srm:1827v:5

2. CIRCUMSTANCES SURROUNDING THE SITUATION

As part of a Corporate goal, the General Office Station Support Services Staff has initiated detailed reviews of the Dresden, Quad Cities, and Zion Station Local Leak Rate Testing (LLRT) programs. This project, which initially began at the Quad Cities site, consists of the following primary steps:

- Research of the plant's 10 CFR 50 Appendix J, Commitments and Policies.
- Compilation of physical data on containment isolation valves, penetrations and pathways.
- Review of each containment pathway, utilizing the above information to document all testing requirements along with their regulatory and technical basis.

Upon completing the Quad Cities review in December 1989, seven systems, with a total of twenty-nine (29) untested containment pathways, were identified. A review of these pathways against the Dresden LLRT program concluded that three of the systems were not included in the program. LLRTs of the three systems were promptly performed in December, 1989 on Dresden Units 2 and 3 as an enhancement to the LLRT program, and satisfactory results were observed. These concerns were reported in voluntary LER 89-31/050237.

One of the seven systems with identified untested pathways at Quad Cities involved the inlet and outlet Primary Containment Drywell Reactor Building Closed Cooling Water (RBCCW) piping. This was not identified as a Dresden concern during the December, 1989 initial review of the Quad Cities concerns due to the fact that RBCCW had been included in the Dresden LLRT program since 1984. The Support Services Staff proceeded to conduct the detailed review of the Dresden LLRT program.

Additional potential concerns were identified as part of the Dresden LLRT study and communicated to the Station on July 18, 1990. After further review and walkdowns, these concerns (which are listed on the following page) were validated by Station personnel on July 20, 1990. Containment operability was classified as indeterminate at 1245 hours on July 20, 1990.

CIRCUMSTANCES SURROUNDING THE SITUATION
(Continued)

A. RBCCW LLRT Volume Concern.

Although the Dresden inlet and outlet Primary Containment Drywell RBCCW piping has been included in the Dresden LLRT program since 1984, the inlet piping LLRT methodology did not satisfy rigorous 10 CFR 50 Appendix J requirements because the inlet volume was pressurized by closing a manual outboard blocking valve (Refer to Figure I for the system configuration). Since the 1984 modification, the inlet RBCCW test configuration only involved valves 2(3)-3799-128 and MO-2(3)-3702. The RBCCW inlet check valve 2(3)-3769-500 was not part of the test boundary. Also, it was determined that MO-2(3)-3702 was not provided with an adequate vent path during testing. The Dresden outlet RBCCW piping LLRT configurations were verified to be satisfactory. It should be noted that the Dresden and Quad Cities RBCCW systems were designed as closed loop systems and did not include LLRT test taps at the time of original construction/licensing.

B. Control Rod Drive (CRD) to Reactor Recirculation System Hydrostatic Test Line Concern.

The Dresden LLRT study revealed that Units 2 and 3 have a one inch primary containment penetration which has not been included in the LLRT program (Refer to Figure II). This concern involves a CRD to Reactor Recirculation system hydrostatic test line which is equipped with two inboard closed manual valves in each of the branches for the two recirculation loops.

C. Pressure Suppression Chamber Narrow Range Level Transmitter Concern.

The Dresden LLRT study revealed that the Dresden Units 2 and 3 Pressure Suppression Chamber Narrow Range Level Transmitter LLRT configurations did not challenge a gasketed flange normally exposed to the pressure suppression chamber internals, as shown in Figure III. The Dresden Unit 3 Suppression Chamber Narrow Range Level transmitter flange was challenged during an Integrated Leak Rate Test (ILRT) which was performed during the previous Refueling Outage on Unit 3 in February, 1990.

The NRC Resident Inspector, Region III, and Nuclear Reactor Regulation (NRR) Staffs were promptly notified of these concerns. As described in Section 3 of this request, compensatory measures were promptly implemented regarding the RBCCW concern and actions to allow LLRTs of the other volumes were promptly initiated. A technical evaluation of each concern was also performed.

3. DISCUSSION OF COMPENSATORY ACTIONS

A. Administrative controls have been implemented to direct the Operators to close the remotely operated valves on the RBCCW systems when the Reactor Recirculation Pumps trip during a postulated Loss of Coolant Accident (LOCA). The RBCCW pumps will be kept on, if possible, to ensure the system is filled with water and pressurized above containment pressure. If the RBCCW Expansion Tank HI/LO level alarm is received during a LOCA event, field teams will be sent, as conditions permit, to check RBCCW piping outside containment to ensure integrity. The Station Director will be informed to take the necessary actions to further isolate the system.

B. Prompt action has been taken on the CRD to Reactor Recirculation system piping by capping this line outside the drywell on each unit, thus providing a positive leakage barrier. This was completed by 7/22/90.

C. Prompt action was also taken on the Unit 2 Pressure Suppression Narrow Range Level transmitter flange by performing a leak check of the flange. The check did not identify any leakage. This test was completed on 7/20/90.

4. EVALUATION OF SAFETY SIGNIFICANCE AND POTENTIAL CONSEQUENCES

An evaluation of the safety significance and potential consequences of the Temporary Waiver of Compliance was performed to provide assurance that this waiver does not create an unsafe condition nor are the potential consequences increased for reasonably postulated events during the period of interest.

A. No open pathways from primary containment to the reactor building, other ancillary structures or the environment exist for the RBCCW and CRD piping penetrations.

1) Reactor Building Closed Cooling (RBCCW) system

The RBCCW system consists of two six inch lines that penetrate primary containment. The supply (inlet) line is normally isolated using a check valve inside and a motor-operated gate valve outside of containment. The return line contains two remotely operated valves, one inside and one outside of the drywell.

In addition to the two containment isolation valves on each line, other barriers exist. Inside of the containment, the piping forms a closed loop. Outside of containment, the piping is configured such that loop water seals are created. The system is filled with pressurized water during normal operation. The water serves as a seal for potentially leaking valves. Additionally, any through-wall water leaks would be easily detected either inside or outside of the drywell through sump level alarms, system pressures, or tank levels.

The piping outside of containment is connected to a vented surge tank. This tank receives makeup water that is supplied by multiple pumps connected to a common header, which provides suction from a 100,000 gallon storage tank. This configuration provides substantial assurance that the system would remain water-filled in post accident conditions.

2) Control Rod Drive system

This one inch line connects to the Recirculation system and is used for hydrostatic testing of the Reactor Recirculation pump seals. The line is isolated inside containment by two normally closed manual valves in each of the branches for the two recirculation loops. The system is isolated outside containment by normally closed manual valves. The system is designed to meet the criteria for a safety-related system.

EVALUATION OF SAFETY SIGNIFICANCE AND POTENTIAL CONSEQUENCES
(continued)

B. The fission product barrier, i.e., the primary containment function, would be maintained except for an extreme combination of improbable added failures.

A comparison of the Dresden RBCCW configurations to the previously completed Quad Cities Probabilistic Risk Assessment (PRA) was performed to further assure that the probability of an event, which would result in a loss of containment function coincident with a LOCA, during the remainder of the current Dresden operating cycles is insignificant. Based on this evaluation, fission product barriers remain intact unless an extreme combination of coincident failures (which is highly improbable) occurred. The probabilities calculated for the event in which containment function failure would occur under LOCA conditions were, therefore, found to be insignificant (well below 1E-7). A Recirculation piping failure, RBCCW pipe failure inside containment, and a failure of the loop seal would have to occur in order to result in failure of the containment function. The probability of a failure of the RBCCW system's containment function coincident with a LOCA is small and is therefore considered to be insignificant. The probabilistic risk comparison is contained in Attachment B.

C. The added risk for ten months of continued operation with these inappropriately tested RBCCW pathways is insignificant.

As discussed previously, a probabilistic risk assessment comparison was performed to further assure that the probability of events which would result in a containment function failure, by the untested pathway, coincident with a LOCA are insignificant. The assessment concluded that the added risk for 10 months of continued operation of Unit 3 is not significant based on a threshold of 1E-7. Unit 2 is scheduled to shutdown in approximately 2 months, thereby presenting an even lower risk.

The Quad Cities evaluation presented in Attachment C concludes that for the RBCCW system (closed piping system inside containment), the probability of containment function failure coincident with a LOCA is 1E-9. Commonwealth Edison therefore concludes that the added risk for 10 months of operation is well below the threshold, and is therefore insignificant.

D. The request avoided an unnecessary thermal transient on both units.

Technical Specification Limiting Condition for Operation (LCO) requirement 3.0.A. requires that the unit be placed in hot shutdown within 12 hours and in cold shutdown within the following 24 hours unless corrective measures are completed that satisfy primary containment integrity requirements. Dresden Station entered the LCO timeclock at 1245 hours and commenced a shutdown on each unit at 1340 hours on July 20, 1990.

Corrective measures for the CRD to Recirculation System Hydrostatic test line and Pressure Suppression Chamber Level transmitter flange were identified and the implementation of those measures was estimated to be at least 36 hours for the most limiting case (capping the CRD lines). The Pressure Suppression Chamber Level transmitter flange was successfully leak tested on July 20, 1990, and the Unit 2 and 3 CRD lines were successfully cut and capped by July 22, 1990. The corrective measures were, therefore, implemented within a comparable time frame to the allowed LCO timeclock, minimizing any additional risk.

srm:1827v:11

5. DISCUSSION WHICH JUSTIFIES THE DURATION OF THE REQUEST

The duration of the requested temporary waiver is 48 hours from the conference call which occurred at 1850 hours on July 20, 1990 (until 1850 hours on July 22, 1990) for the CRD lines and the Unit 2 Pressure Suppression Narrow Range Level transmitter. The CRD lines were capped and leak tested by July 22, 1990, and the Unit 2 Pressure Suppression Narrow Range Level Transmitter line flange was tested on July 20, 1990. In order to plan and conduct these activities, the 48 hour waiver was requested. The added risk to the public by allowing an additional 48 hours of operation with these systems untested does not create a significant increase in risk to the health and safety of the public.

For RBCCW, the requested Temporary Waiver of Compliance would allow one pathway on each Unit to remain in the current testing configuration until an emergency Technical Specification amendment is approved. As stated previously, an emergency Technical Specification amendment request will be submitted to allow a further waiver of the RBCCW testing requirements through the remainder of the current operating cycles (Cycle 12). The shutdown for end of Cycle 12 is currently scheduled for September, 1990 on Unit 2 and March, 1991 for Unit 3. Commonwealth Edison System Power Supply considerations could result in changes to the current outage schedule, however, the basis for this requested duration is twofold:

- Preparation for the modifications, which would allow the testing of the RBCCW pathways, is currently under development. The Temporary Waiver of Compliance and proposed Technical Specification amendment would, therefore, avoid an extended and unplanned outage with the associated loss of generation and related costs of replacement power.

- As discussed in previous sections, evaluations included in Attachments B and C (which utilized PRA methodology) considered a time frame consistent with the current outage schedules and concluded that no significant increase in risk to the public health and safety exists due to the untested RBCCW inlet pathway. Since margin exists between the range of accident probabilities and a reasonable risk threshold (1E-7), possible changes to the outage schedule could be accommodated without creating significant risk.

6. BASIS FOR CONCLUDING THAT THE REQUEST DOES NOT INVOLVE A SIGNIFICANT HAZARDS CONSIDERATION

Commonwealth Edison has evaluated the proposed Temporary Waiver of Compliance and determined that it does not represent a significant hazards consideration. Based on the criteria which defines a significant hazards consideration established in 10 CFR 50.92 (c), operation of Dresden Units 2 and 3 in accordance with the request for Temporary Waiver of Compliance will not:

RBCCW

a. involve a significant increase in the probability or consequences of an accident previously evaluated.

   With respect to an increase in the probability of a previously evaluated accident, leakage through the associated valves does not alter the initiating aspects of the events.

   With regard to the consequences of an accident previously evaluated, the continued operation in the existing RBCCW configuration does not present a significant increase in the probability of a larger release of radioactivity than described in the FSAR. A Probability Risk Assessment (PRA) which was previously performed for the Quad Cities RBCCW system demonstrated that for those credible events, the existing system design features function to inhibit potential release paths, such as a sealed water-filled system. In addition, the Quad Cities PRA estimated that for less credible events, the probability of increased risk is not significant (less than 1.0E-07). The potential for an adverse change in consequences is not supported for accidents of reasonable probabilities but would require accident scenarios with a probability for occurrence on the order of 1.0E-10 or less. Commonwealth Edison has reviewed the Quad Cities PRA for its applicability to Dresden Station. As described in Attachment B, Commonwealth Edison has determined that the Quad Cities PRA is applicable to the Dresden RBCCW configuration. Furthermore, a Dresden-specific PRA is being developed and is currently targeted to be completed by July 27, 1990. Thus, it is concluded that continued operation will not pose a significant increase in risk with regard to accident probabilities or consequences.

6. BASIS FOR CONCLUDING THAT THE REQUEST DOES NOT INVOLVE A SIGNIFICANT HAZARDS CONSIDERATION

(Continued)

b. create the possibility of a new or different kind of accident from any accident previously evaluated.

The Temporary Waiver of Compliance does not result in any physical plant changes during the period of interest. Potential leakage of the valves in question would at worst affect the severity and not the type of accident.

c. involve a significant reduction in the margin of safety.

As described in the Technical Specification Bases, dose calculations suggest that the accident leak rate could be allowed to increase to about 3.2%/day before the guideline thyroid dose value provided in 10 CFR 100 would be exceeded. However, 1.6%/day provides an additional margin of safety to assure the health and safety of the general public. Additional margin is further achieved by establishing the allowable operational leak rate at 75% of the maximum allowable leak rate. Despite the lack of leak testing, substantial barriers to fission product release are provided by the intact system piping and associated valves. These barriers provide mitigating capability such that the potential impact on the margin of safety is insignificant. The Quad Cities Probabilistic Risk Assessment provides assurance that the probability of containment function failure coincident with LOCA conditions is also acceptably small.

CRD to Reactor Recirculation System Hydrostatic Test Line

a. involve a significant increase in the probability or consequences of an accident previously evaluated.

The Temporary Waiver of Compliance does not modify system configuration nor does it change the administrative controls over the existing system; therefore, the Waiver of Compliance does not increase the probability of an accident previously analyzed. The untested one inch test line branches into two 3/4 inch lines inside the drywell. Each 3/4 inch line has two closed manual valves. Prompt corrective actions were implemented within 48 hours of discovery. This time frame is comparable to the Technical Specification Limiting Condition for Operation action required for indeterminate primary containment integrity status. The consequences of a previously analyzed accident would not be significantly increased considering the short duration (less than 48 hours) of the waiver request and other mitigating system which are available, i.e., downstream piping and closed valves, secondary containment, Standby Gas Treatment and an elevated point of release. Therefore, this concern does not involve a significant increase in the probability or consequence of an accident previously evaluated.

6. BASIS FOR CONCLUDING THAT THE REQUEST DOES NOT INVOLVE A SIGNIFICANT HAZARDS CONSIDERATION

(Continued)

b. create the possibility of a new or different kind of accident from any accident previously evaluated.

The Temporary Waiver of Compliance does not result in any physical plant changes during the period of interest. Potential leakage of the valves in question would at worst affect the severity and not the type of accident.

c. involve a significant reduction in the margin of safety.

As described in the Technical Specification Bases, dose calculations suggest that the accident leak rate could be allowed to increase to about 3.2%/day before the guideline thyroid dose value provided in 10 CFR 100 would be exceeded. However, 1.6%/day provides an additional margin of safety to assure the health and safety of the general public. Additional margin is further achieved by establishing the allowable operational leak rate at 75% of the maximum allowable leak rate. Despite the lack of leak testing, substantial barriers to fission product release are provided by the intact system piping and associated valves. These barriers provide mitigating capability such that the potential impact on the margin of safety is insignificant.

Suppression Chamber Narrow Range Transmitter Flange

a. involve a significant increase in the probability or consequences of an accident previously evaluated.

The Temporary Waiver of Compliance does not modify system configuration nor does it change the administrative controls over the existing system. Prompt corrective actions were implemented within 12 hours of discovery (i.e., performance of a satisfactory leakage test). This time frame was within the Technical Specification Limiting Condition for Operation action required for indeterminate primary containment integrity status. The consequences of a previously analyzed accident is not increased significantly given the short duration (less than 48 hours) and the availability of other mitigating features, i.e., secondary containment, Standby Gas Treatment, and the elevated release. Therefore, this concern does not involve a significant increase in the probability or consequence of an accident previously evaluated.

6. BASIS FOR CONCLUDING THAT THE REQUEST DOES NOT INVOLVE

A SIGNIFICANT HAZARDS CONSIDERATION

(continued)

b. create the possibility of a new or different kind of accident from any accident previously evaluated.

The Temporary Waiver of Compliance does not result in any physical plant changes during the period of interest. Potential leakage of the valves in question would at worst affect the severity and not the type of accident.

c. involve a significant reduction in the margin of safety.

As described in the Technical Specification Bases, dose calculations suggest that the accident leak rate could be allowed to increase to about 3.2%/day before the guideline thyroid dose value provided in 10 CFR 100 would be exceeded. However, 1.6%/day provides an additional margin of safety to assure the health and safety of the general public. Additional margin is further achieved by establishing the allowable operational leak rate at 75% of the maximum allowable leak rate. The margin of safety is not significantly affected due to the relatively insignificant probability of a LOCA occurring during an additional 48 hours.

7. BASIS FOR CONCLUDING THAT THE REQUEST DOES NOT INVOLVE IRREVERSIBLE ENVIRONMENTAL CONSEQUENCES

Based on the risk assessment results performed previously for the Quad Cities RBCCW system and the similarity to the Dresden RBCCW systems, the added risk of a radioactive release due to the insufficiently tested RBCCW pathways is insignificant; therefore, the environmental consequences remain unchanged.

The Temporary Waiver of Compliance request does not involve a change in the installation or use of the facilities or components located within the restricted areas as defined in 10 CFR 20. Commonwealth Edison has determined that this Temporary Waiver of Compliance does not involve a significant increase in the amount, or a significant change in the types, of any effluents that may be released off-site and that there is no significant increase in individual or cumulative occupational radiation exposure. This determination was based on the limited time frame for continued operation associated with the untested CRD to Recirculation system hydrostatic test lines and Unit 2 Pressure Suppression Narrow Range Level transmitter flange, the comparison to the Quad Cities RBCCW probabilistic assessment (Attachment C), and the mitigating features. Accordingly, this Temporary Waiver of Compliance meets the eligibility criteria for categorical exclusion set forth in 10 CFR 51.22(c)(9). Pursuant to 10 CFR 51.22(b), no environmental impact statement or environmental assessment need be prepared in connection with granting of the Temporary Waiver of Compliance.

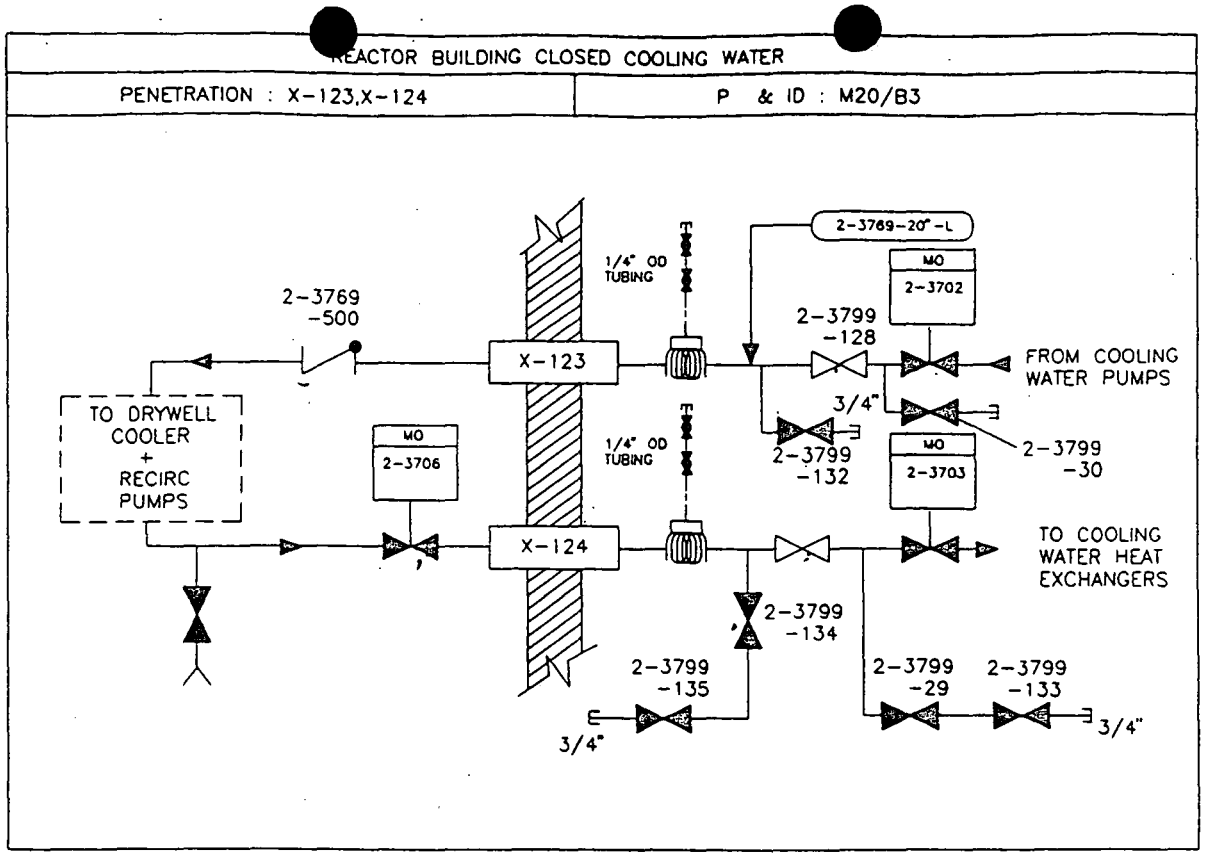

FIGURE I

REACTOR BUILDING CLOSED COOLING WATER SYSTEM

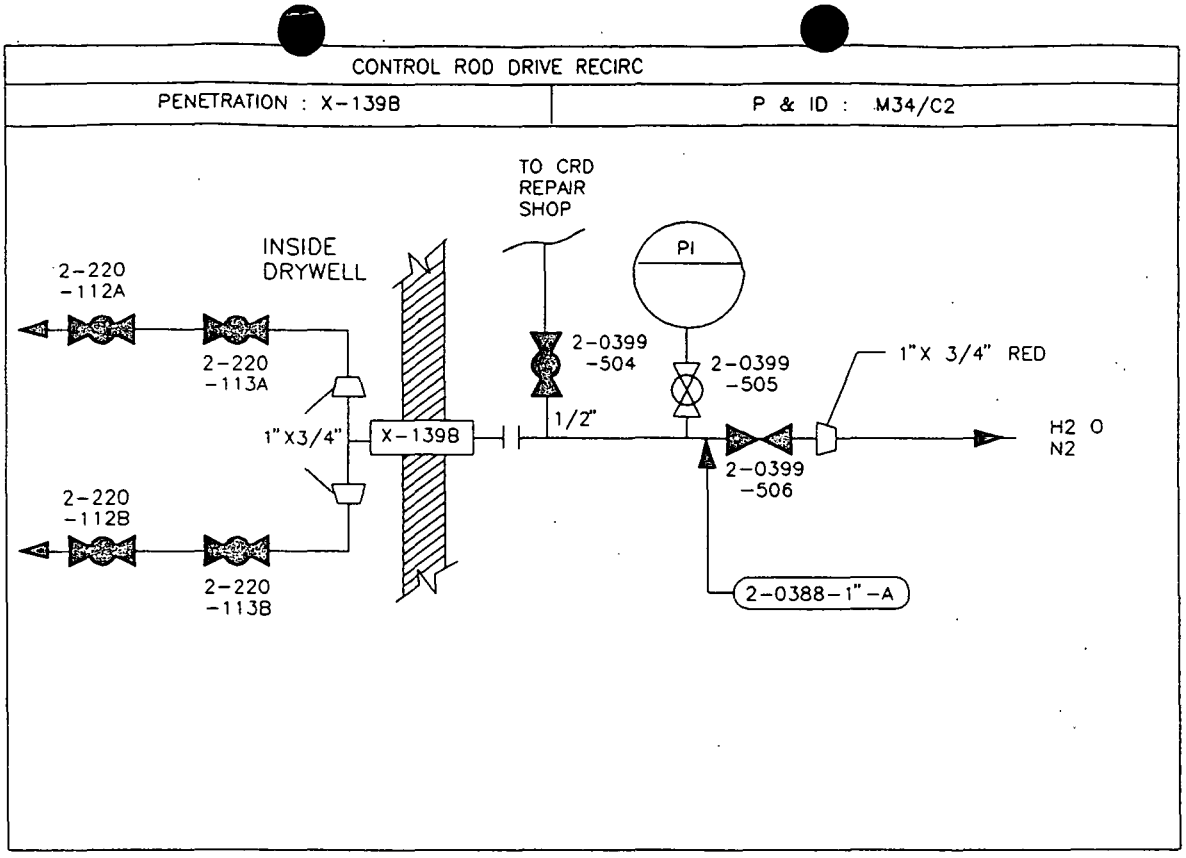

FIGURE II

CONTROL ROD DRIVE

TO

RECIRCULATION SYSTEM HYDROSTATIC TEST LINE

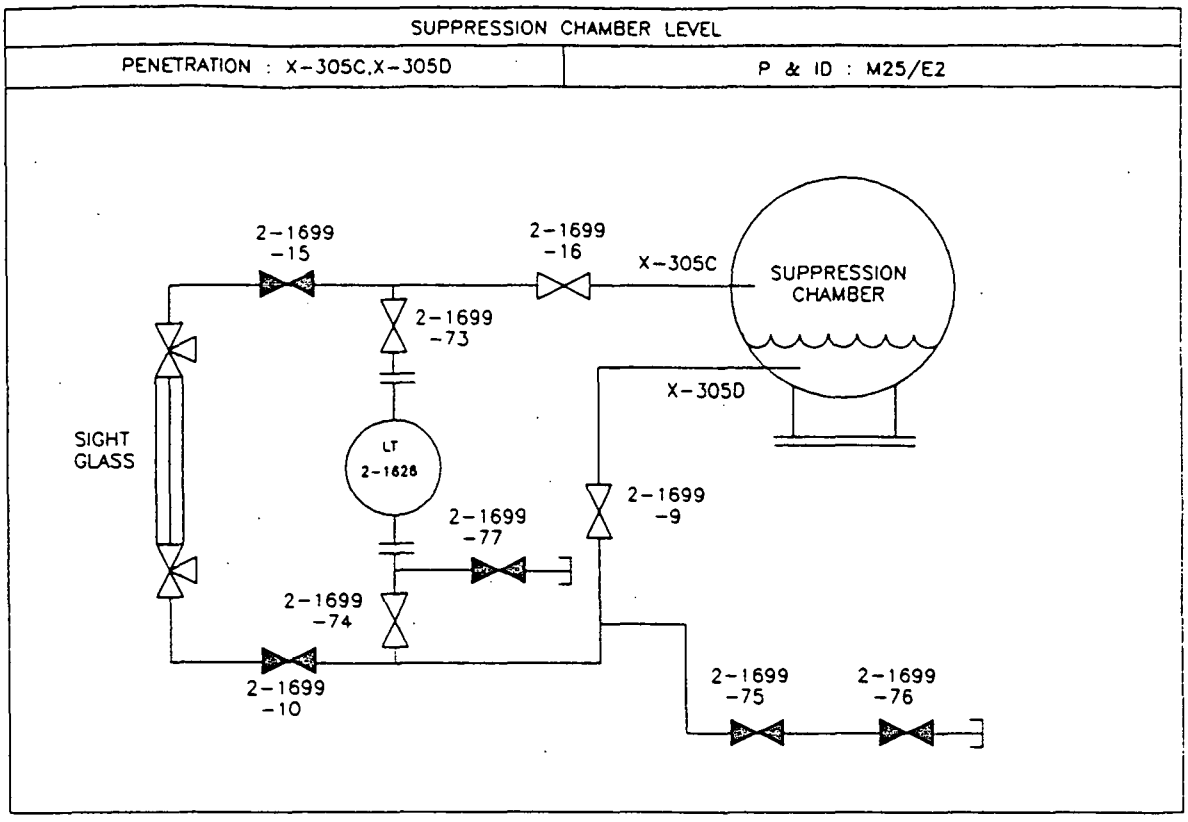

FIGURE III

PRESSURE SUPPRESSION CHAMBER NARROW RANGE LEVEL INSTRUMENT

ATTACHMENT B

RISK ASSESSMENT FOR UNTESTED RBCCW PATHWAYS

- Dresden Comparison Review to Quad Cities PRA

A probabilistic risk assessment was previously performed for Quad Cities Unit 1 to demonstrate that the probability of events which would result in a containment function failure, by untested RBCCW system pathways, coincident with LOCA are insignificant. This assessment concluded that the added risk for five months of continued operation is not significant based on threshold probability of 1E-7 (i.e., Quad Cities results were in the range of 2E-10 to 2E-9).

A comparison review of the RBCCW system configurations at Dresden Station to the Quad Cities Unit 1 RBCCW system is being performed to identify potentially significant differences in the line sizes and layouts, and proximity of some of these lines to the high energy systems.

It is unrealistic to expect that these types of differences could be significant for two reasons:

1. The typical similarities in system configurations at "sister" stations such as Dresden and Quad Cities.

2. For the Dresden specific probabilities to approach the 1E-7 threshold, the number of the affected line segments would have to increase by a factor of 100 to 1000. Since the increased duration of the Dresden waiver only contributes a factor of 2 (10 months vs. 5 months for Quad Cities), there is considerable margin to accommodate a potential increased number of affected line segments.

Therefore, an examination of the Quad Cities RBCCW system probabilistic evaluation shows that its conclusion are applicable to the RBCCW systems at each of the Dresden Units despite the above mentioned potential configuration differences, i.e., the containment function failure probability for Dresden is also well below the 1E-7 threshold.

srm:1827v:18

ATTACHMENT C

RISK ASSESSMENT FOR UNTESTED PATHWAYS

A. ASSESSMENT OF INDEPENDENT PIPING RUPTURES IN QUAD CITIES AUXILIARY SYSTEMS

This assessment considers the piping of auxiliary systems that penetrate the drywell at Quad Cities and contains isolation valves that have not been local leak rate tested. The assessment is intended to provide a realistic picture of the importance of such systems and related valve testing to plant risk.

First of all, consider that these piping systems are effectively closed systems both inside and outside the drywell. That is, the systems do not interface directly with the drywell environment or with the reator building environment unless a fault occurs in the piping system. Secondly, it is recognized that the occurrence of such a fault may be an independent event or it may be consequential to (dependent on) the design basis event of interest (e.g. via pipe whip).

For the auxiliary systems of interest, we will assume that the lack of valve leak rate testing precludes effective isolation of the system at the drywell boudary. The issue then centers around the probability with which the piping systems develop faults both inside and outside that boundary. The following additional points should be noted:

1. A rigorous analysis would have us survey all such systems for specific piping configuration and segmentation as well as for proximity to primary system piping which might induce consequential damage. We choose, instead, to bound the issue by evaluating the probabilities on a per segment basis.

2. We employ the historical licensing base criteria of dismissing events having probabilities lower than 1E-7 per year as not meriting consideration (e.g. standard review plan Sections 2.2.3 and 3.5.1.5)

3. We recognize the historically applied pipe rupture frequency of 8.6E-10 per hour per pipe segment for large pipe which is taken from WASH-1400. While this is of some use in upper limit evaluations, it is extremely conservative given what we know today about leak-before-break and the relatively robust character of low temperature, low pressure, low cyclic duty carbon steel piping systems such as the auxiliary systems under consideration. We judge that a more reasonable value for pipe rupture for these systems is about 1E-11 per hour per pipe segment.

Given the foregoing and a WASH-1400 LOCA probability of 1E-4 per year, we can derive the probability of such a LOCA coincident with the simultaneous rupture of an auxiliary systems piping both inside and outside the drywell. In this case, we assume that such events, occurring in the same 24 hour period, are coincident.

Risk Assessment For Untested Pathways

(continued)

Very clearly, the situation where the interior auxiliary system rupture is not independent of the LOCA rupture dominates the probabilities since the failure of the auxiliary system piping inside the drywell occurs with a unity probability given the LOCA event. We can evaluate this case using both realistic pipe rupture frequencies and the bounding value from WASH-1400. Our formulation is:

[1] $P_T = N*5months*31days*[1E-4/300)*P_R]$

where N is the number of segments outside the drywell

300 is the number of operating days per year

P_R is the rupture probability per day

P_T is the probability of coincident LOCA and an open pathway for fission product release.

Our results for the 5 months of operation remaining in this cycle are:

bounding case	$P_T = 1.06E-12*N$
realistic case	$P_T = 1.24E-14*N$

Clearly, these results show a great deal of margin to the value 1E-7 which has been used as a reasonable risk threshold or "yardstick". The number of piping segments in any system, which could effect a problem by rupturing, is obviously far less than the 100,000 segments required by even the bounding analysis. Therefore, those auxiliary systems cited as being of possible concern offer no increased risk of any significance for the period of interest despite a lack of valve leak testing.

B. ASSESSMENT OF QUAD CITIES CORE SPRAY LINE PIPE BREAK AND RISK IMPACTS

The configuration of the core spray line as it penetrates the drywell and connects to the reactor vessel is shown in general in figure 1 (attached). This assessment is intended to realistically consider a design basis LOCA in conjunction with a single failure (in this case a pipe rupture in the core spray line outside the drywell) given that the isolation valves shown have not undergone formal leak rate testing.

As in Section A, we employ the licensing base value of 1E-7 per year for a comparison yardstick. We also employ basic probability values identical to those in Section A for the performance of our calculations. We note that a pipe rupture in the core spray line inside the drywell is not really an issue in this case since the system outside offers no leak path (excluding minor packing leaks) except to the lower elevations of the suppression pool. This is precisely where one would direct such leakage given a choice in the matter. Therefore, the question centers around a LOCA coincident with an independent, simultaneous core spray line rupture outside the drywell. As with the cases cited in Section A, the probability of such an event, over the 5 month period of interest, even using bounding analyses is very small (about 1E-12). Moreover, the isolation valves, even though not formally leak tested, are tested in a de facto sense in that a pressure sensor is located upstream of the check valve to detect any significant valve leakage. This sensor will alarm in the control room when it senses a pressure of 360 psig.

As a result of the foregoing assessment, we conclude that the lack of formal leak rate testing on the core spray line isolation valves does not significantly increase risk at Quad Cities for the period of interest.

C. ASSESSMENT OF REACTOR BUILDING CLOSED COOLING WATER (RBCCW) PIPE BREAKS AND RISK IMPACTS

The RBCCW system is configured such that the portion of the system outside the drywell is not a closed system. The RBCCW system contains a tank on the pump suction (heat exchanger discharge) which acts as a surge tank and which is vented to the reactor building. Therefore, if we take no credit for isolation valves which are not formally leak tested, the piping inside the drywell becomes of major import to our results. In this case, since the RBCCW piping is not specifically protected against pipe whip, we must consider the chances of pipe whip damaging major diameter piping segments. We will also consider the likelihood of opening a direct fission product path through the tank vent given such a rupture.

Our first approach is to consider each segment identified in the context of its proximity to potential LOCA inducing piping and to judge the likelihood of a failure inducing impact. For RBCCW piping closer than 4 feet to the primary pipe, we judge that a LOCA has a one in four chance of impacting the RBCCW pipe segment. That is, if the break moves in the quadrant of the pipe segment we will have a "hit" and consequential rupture. For piping which appears vulnerable due to the span of primary pipe but which is further away than four feet, we use a one in 36 chance of a hit. We identify 11 segments in the former category and 2 in the latter category. While this is somewhat subjective, it does follow basic geometry and small variations from these criteria would have not impact on the results of this study.

Risk Assessment For Untested Pathways

(continued)

Given the geometry considered, we note that on 12 primary system piping segments are able to interact. We also know that the probabilities of LOCA ruptures is grossly over estimated by the WASH-1400 value of 8.6E-10 ruptures per segment per hour. A value closer to reality would be about 8E-11 ruptures per segment per hour. Our formulation for the analysis required to establish the probability of a LOCA and failed drywell isolation is;

$$P_T = 5*31*[(12*P_R*24)\ (11/4+2/36)]$$

where P_R is the LOCA rupture probability.
Using the values cited above,

Bounding case P_T = 1E-4 for the 5 month period of interest

Realistic case P_T = 1E-5 for the same period.

While these numerical values may seem high compared to those generated for the other cases (Sections A and B), we note that they are offset by a special source term consideration. Both the inlet and outlet lines to the drywell have large loop seals built into the piping system. This feature would effectively prevent the RBCCW pipe from draining empty into the containment area even if pipe whip did rupture one or more segments in the drywell. These loop seals would not be emptied by the initial pressure transient since the tank vent is of such limited flow area and, since drywell pressure would be rapidly reduced by the suppression pool, the loop seals would act to eliminate much of the leakage assumed to occur past the isolation valves. Moreover, the RBCCW surge tank is equipped with automatic makeup from large demineralized water storage tanks via multiple pumps. Therefore, in order to increase the risk from untested isolation valves, we would have to lose the loop seal function as well as have a rupture of RBCCW inside the containment. The most likely manner in which this could happen would be a substantial leak in the loop seal area followed by loss of makeup. The most probable cause for losing the multiple makeup pumps is a loss of off site power. The probability of the leak in the loop seal is estimated from small LOCA values to be about 1E-3 per year and the probability of loss of off site power is about 5E-2 per year. The combined likelihood is therefore;

Bounding case $P_T = (1E-4)*(1E-3)*(5E-2)*5/12 = 2.1E-9$

Realistic case P_T = 2.1E-10 for the period of interest.

Based on the foregoing, we expect that operation with the RBCCW valves not formally leak tested will not significantly add to plant risk for the 5 month period of interest.

SI APERTURE CARD

Also Available On Aperture Card

FOR REFERENCE ONLY

Docket # 50-237
Accession # 9007300017
Date 7/23/90
Regulatory Docket File

THIS DRAWING HAS BEEN PHOTOGRAPHICALLY REDUCED BY REPRODUCTION CONSULTANTS, LTD.

DATE 8/31/89

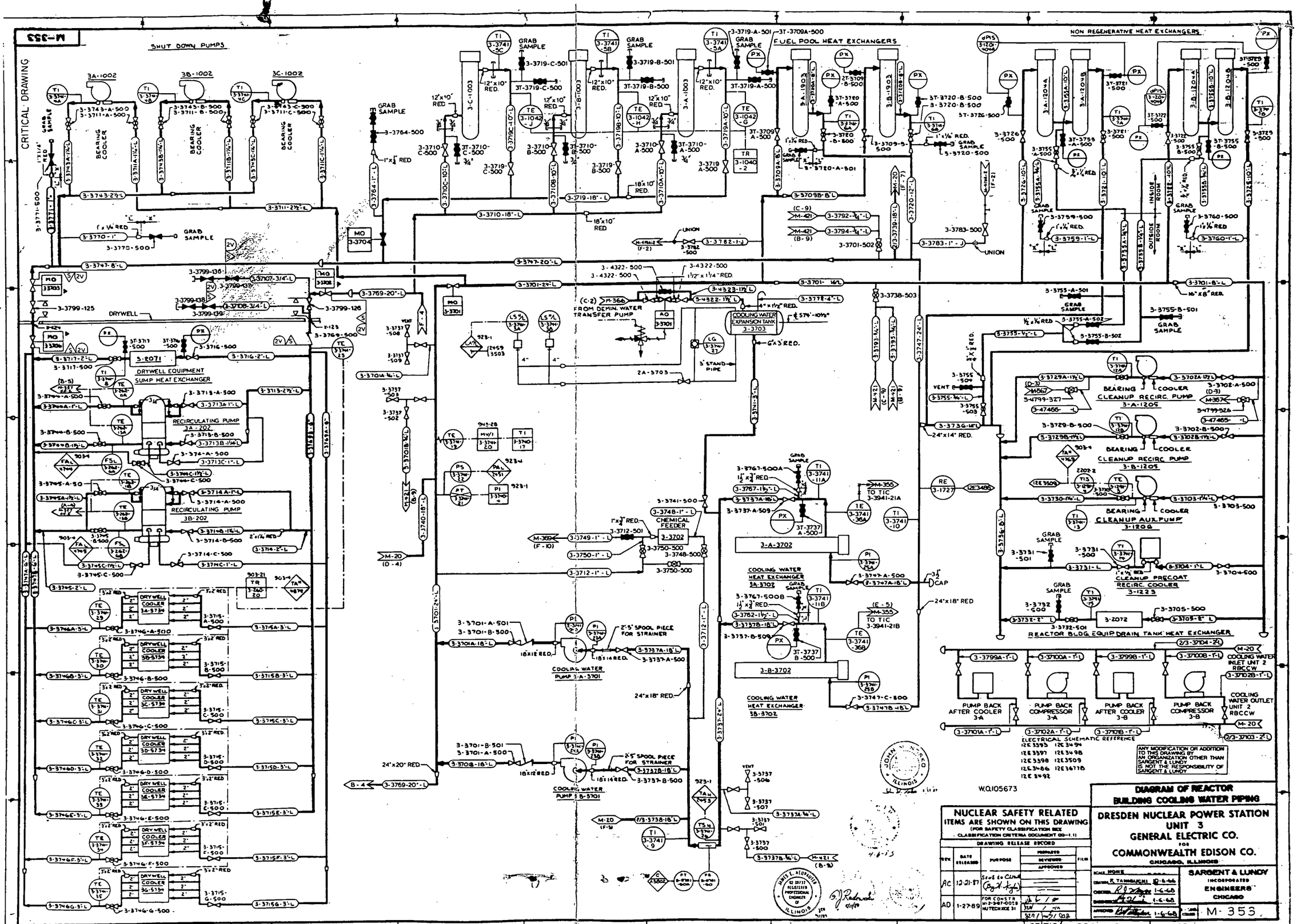

9007300017-04

SI APERTURE CARD

Also Available On Aperture Card

Docket # 50-237
Accession # 9002300017
Date 7/23/90
Regulatory Docket File

FOR REFERENCE ONLY

THIS DRAWING HAS BEEN PHOTOGRAPHICALLY REDUCED BY REPRODUCTION CONSULTANTS, LTD.

DATE 8/31/89

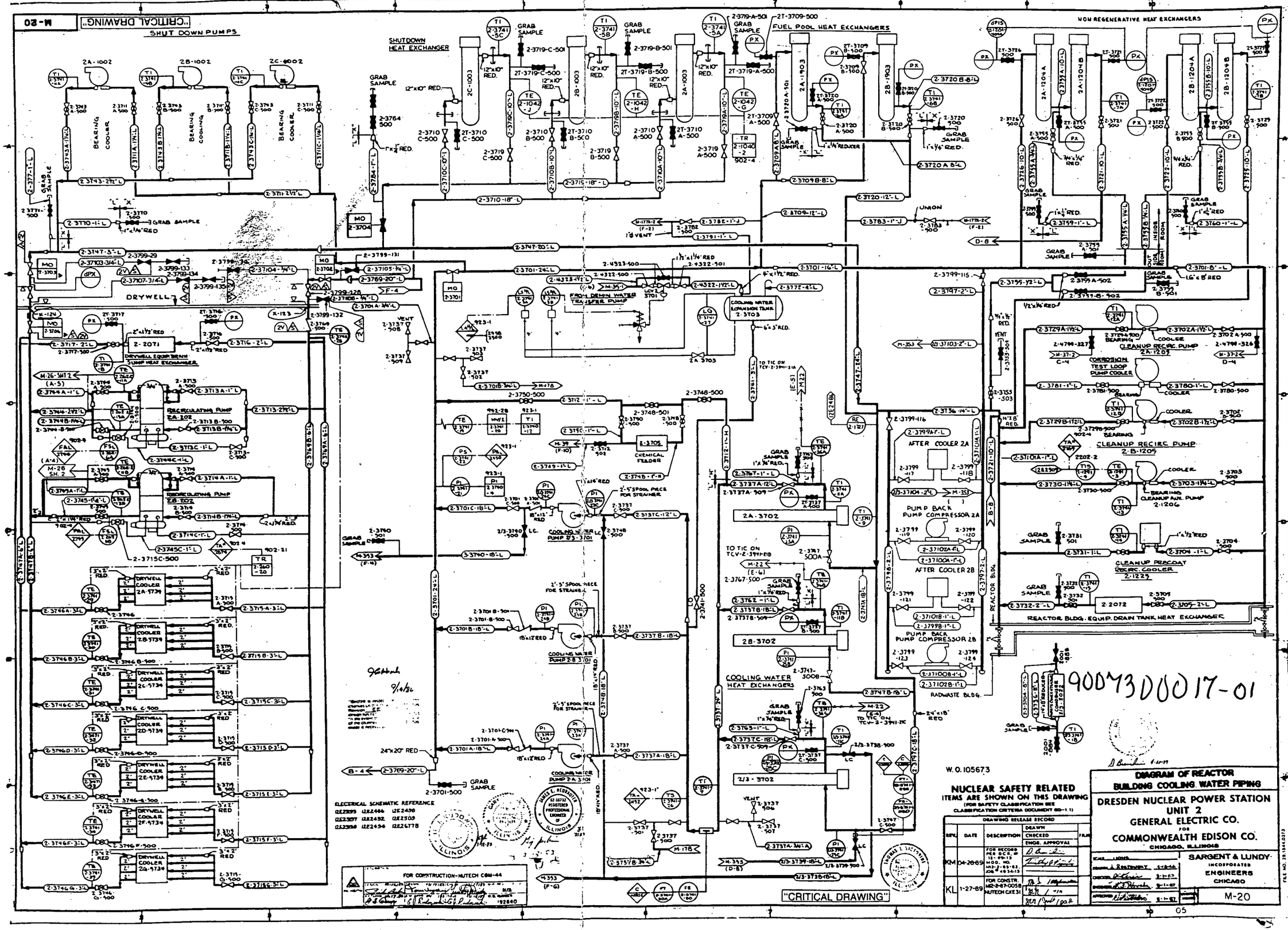

SI
APERTURE
CARD

Also Available On
Aperture Card

Docket # 50-237
Accession # 9007300017
Date 7/23/90
Regulatory Docket File

FOR REFERENCE ONLY

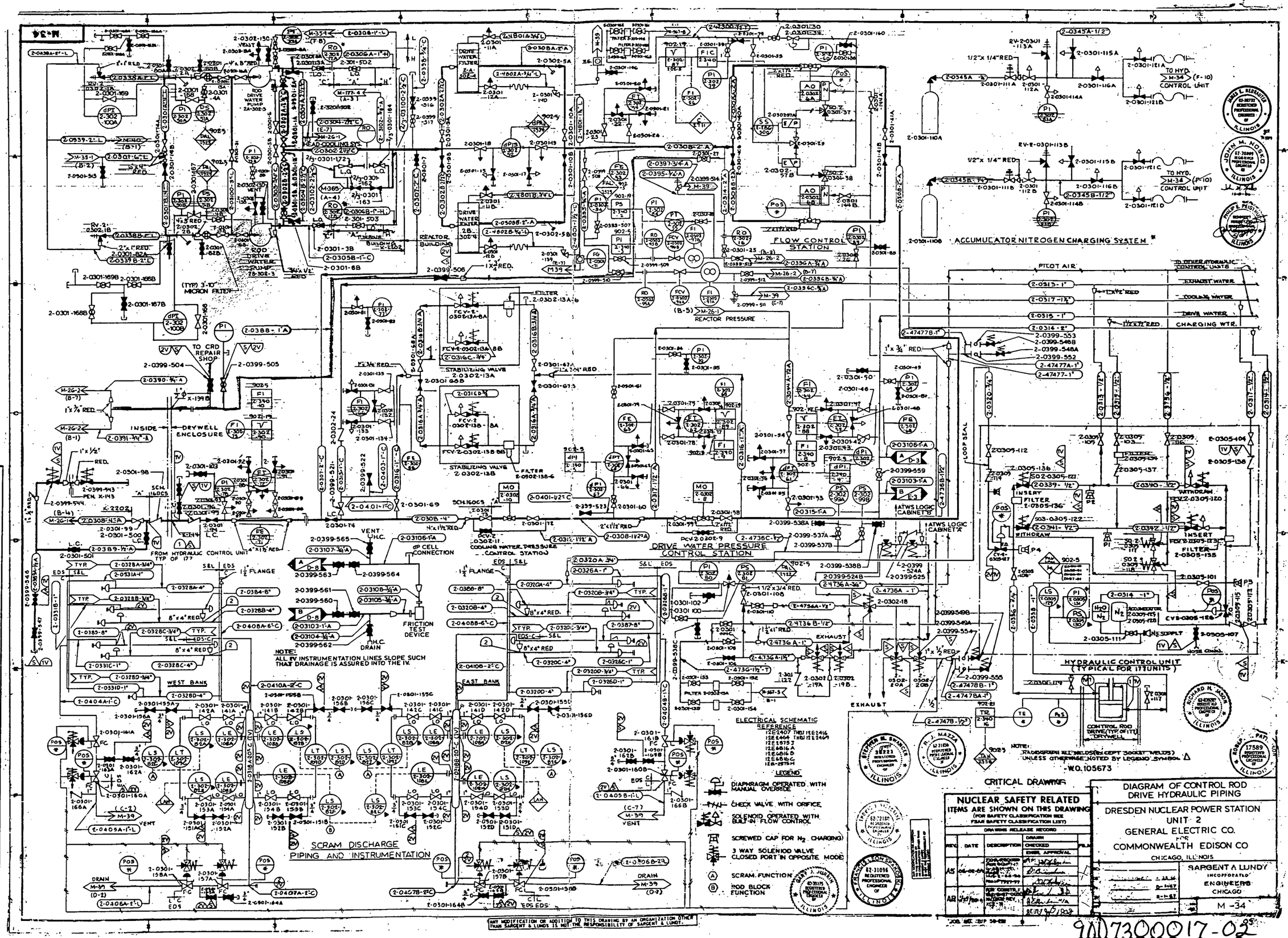

THIS DRAWING HAS BEEN PHOTOGRAPHICALLY REDUCED BY REPRODUCTION CONSULTANTS, LTD.
DATE 8/31/89

9007300017-02

SI APERTURE CARD

Also Available On Aperture Card

Docket # 50-237
Accession # 9007300017
Date 7/23/90
Regulatory Docket File

FOR REFERENCE ONLY

THIS DRAWING HAS BEEN PHOTOGRAPHICALLY REDUCED BY REPRODUCTION CONSULTANTS, LTD.

DATE 8/31/89

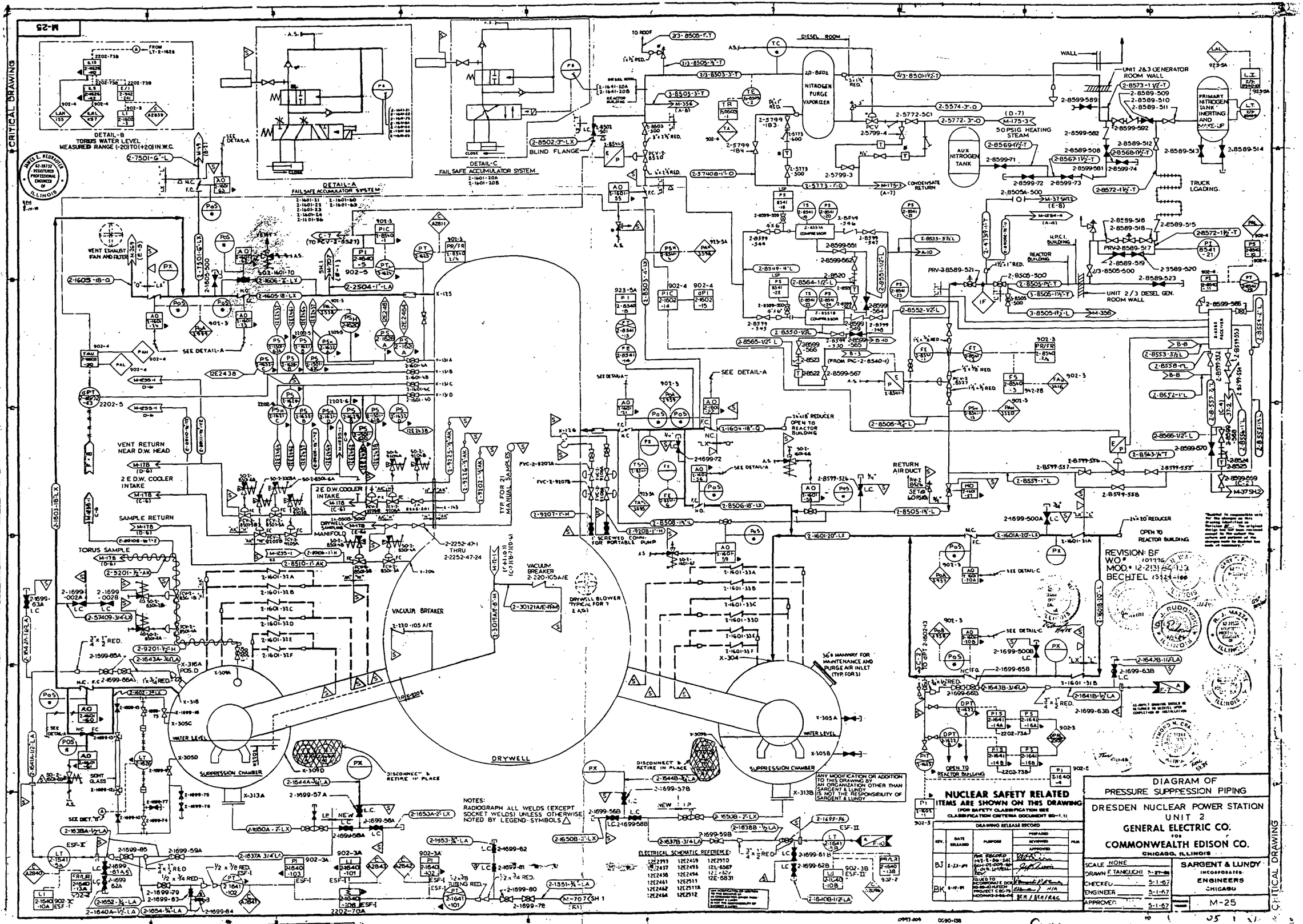

9007300017-03

SI APERTURE CARD

Also Available On Aperture Card

Docket # 50-237
Accession # 9007300017
Date 7/23/90
Regulatory Docket File

FOR REFERENCE ONLY

THIS DRAWING HAS BEEN PHOTOGRAPHICALLY REDUCED BY REPRODUCTION CONSULTANTS, LTD.

DATE 8/31/89

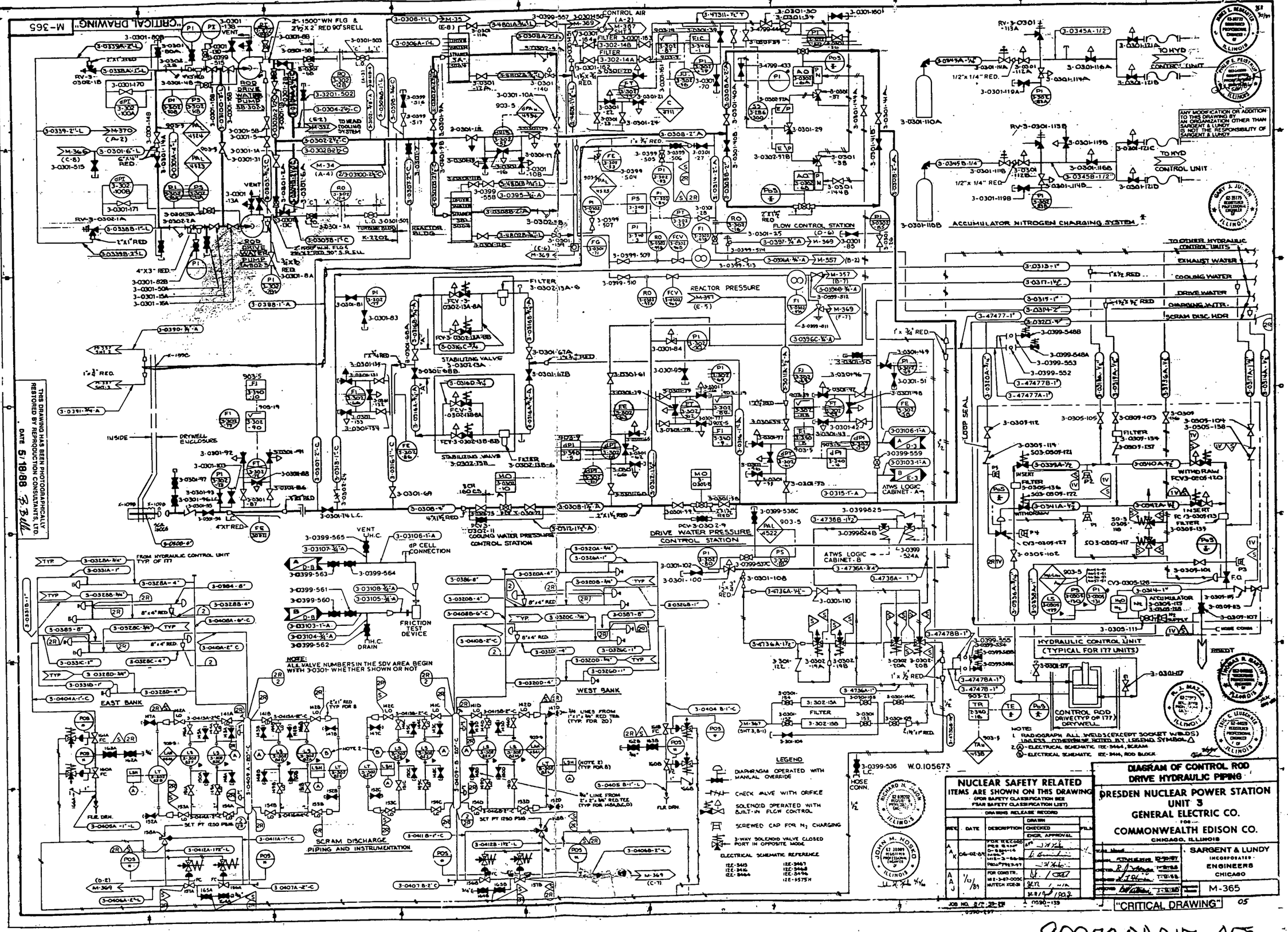

THIS DRAWING HAS BEEN PHOTOGRAPHICALLY RESTORED BY REPRODUCTION CONSULTANTS, LTD.
DATE 5/18/88

90073DD017-05

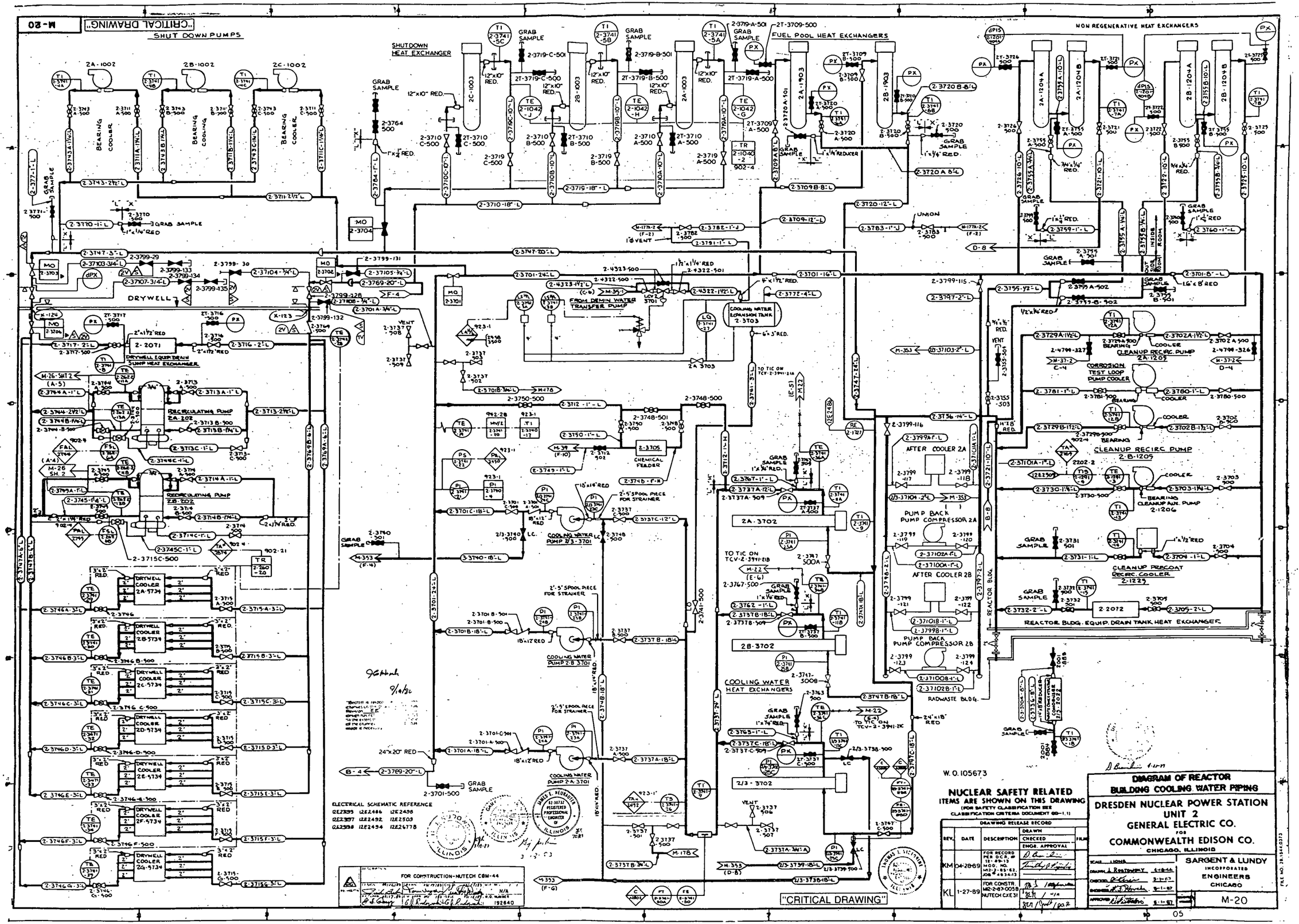

FOR REFERENCE ONLY

THIS DRAWING HAS BEEN PHOTOGRAPHICALLY REDUCED BY REPRODUCTION CONSULTANTS, LTD.

DATE 8/31/89

31

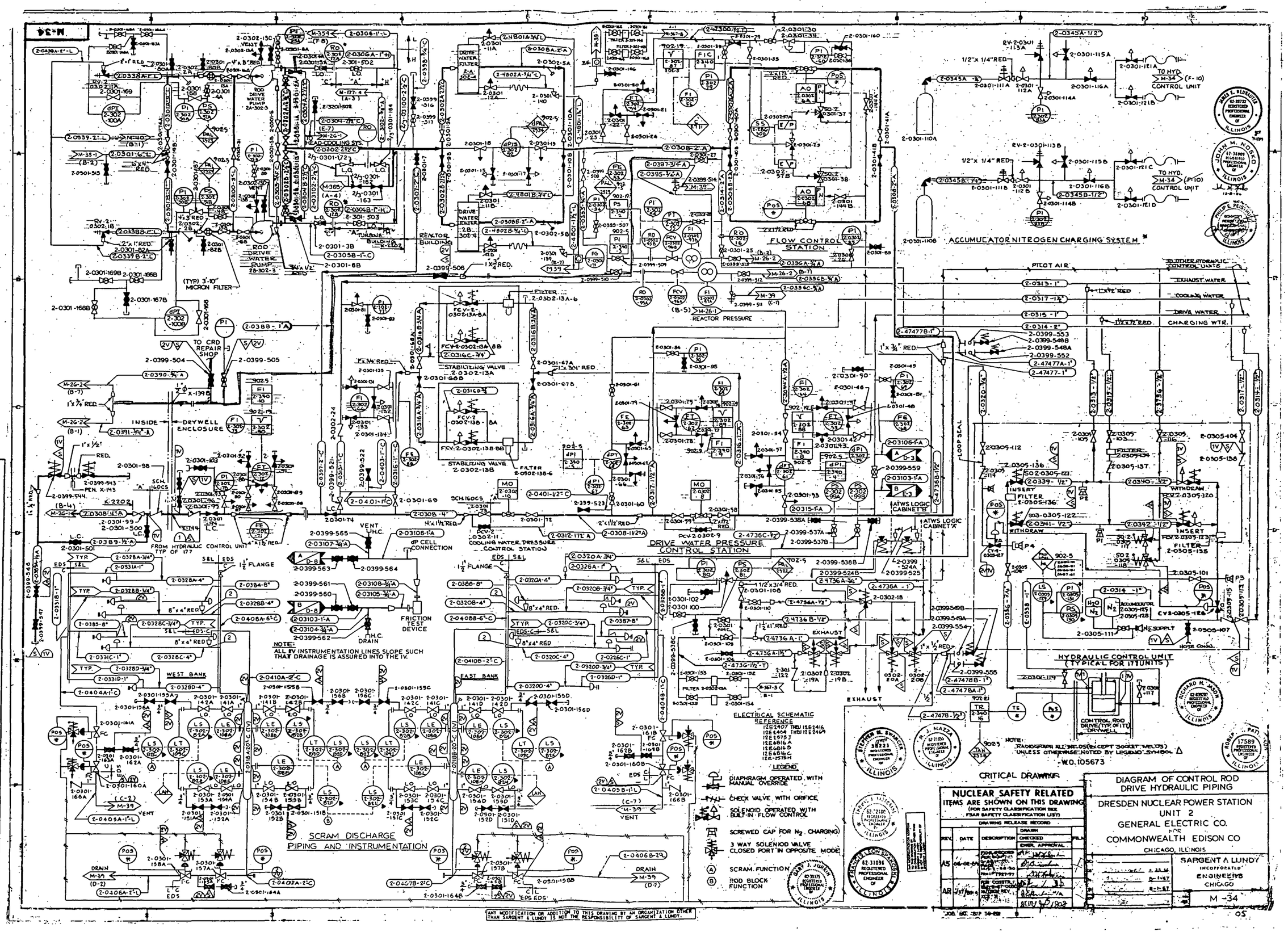

FOR REFERENCE ONLY

THIS DRAWING HAS BEEN PHOTOGRAPHICALLY REDUCED BY REPRODUCTION CONSULTANTS, LTD.

DATE 8/31/89

49

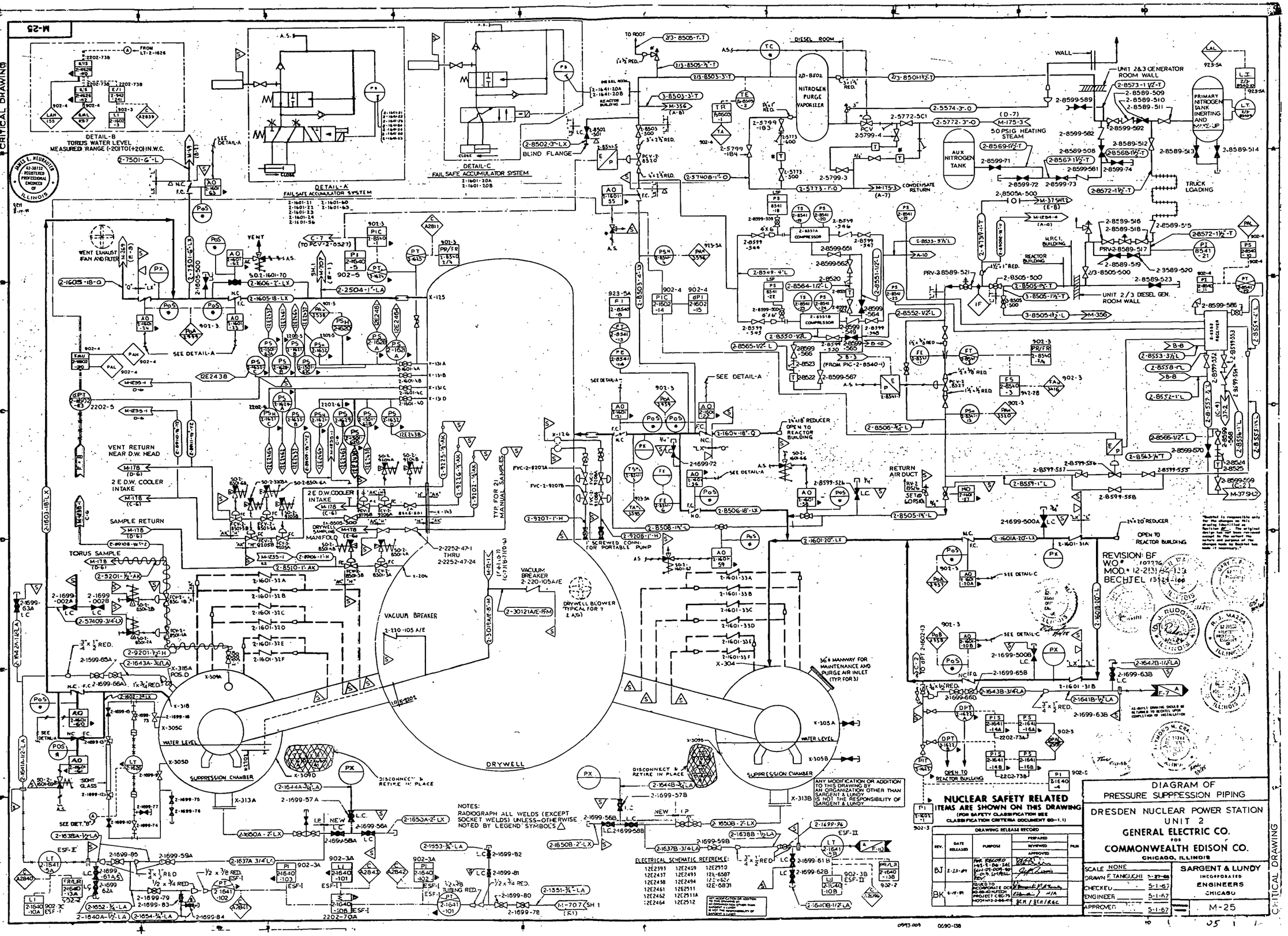

FOR REFERENCE ONLY

THIS DRAWING HAS BEEN PHOTOGRAPHICALLY REDUCED BY REPRODUCTION CONSULTANTS, LTD.

DATE 8/31/89

38

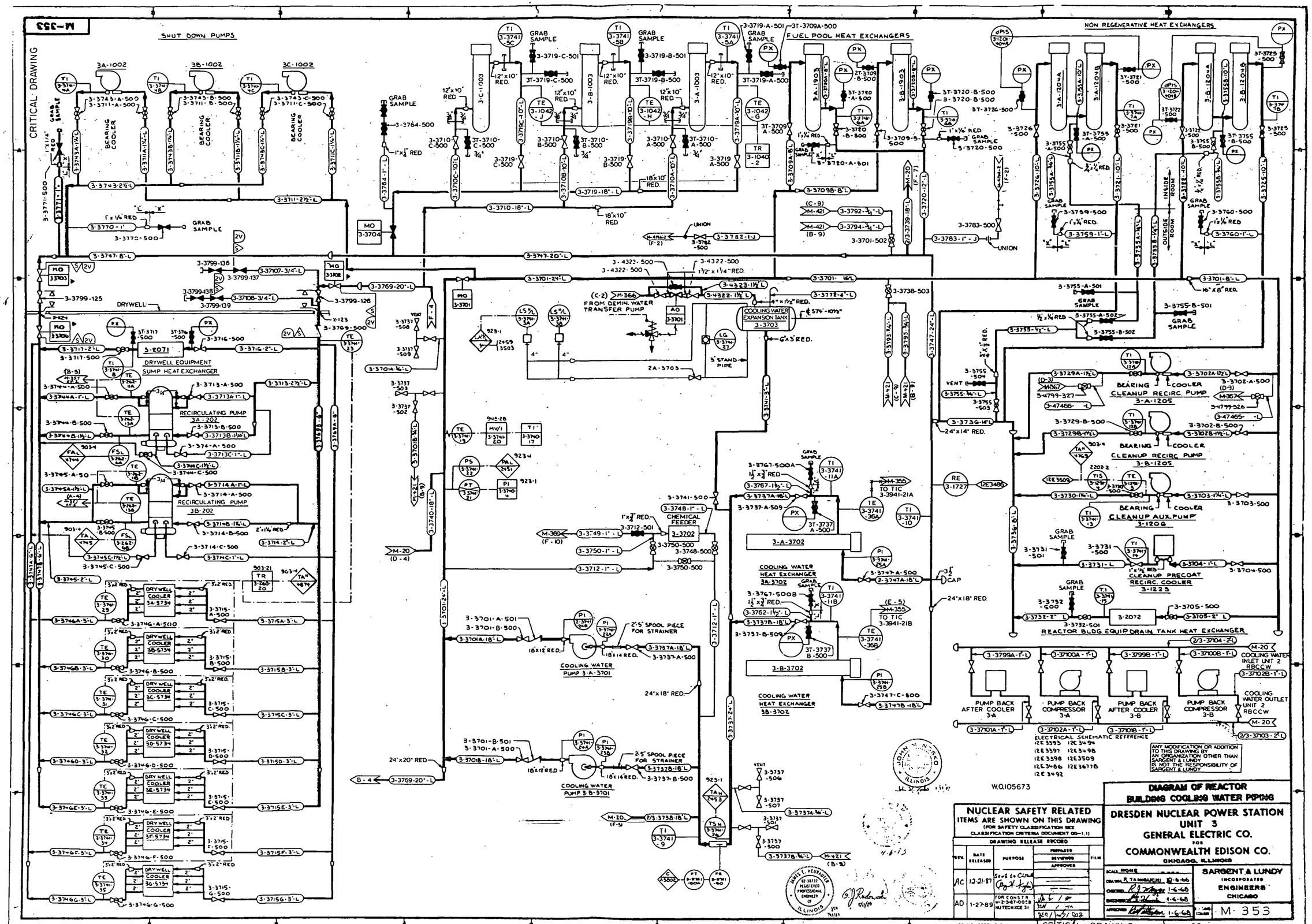

FOR REFERENCE ONLY

THIS DRAWING HAS BEEN PHOTOGRAPHICALLY REDUCED BY REPRODUCTION CONSULTANTS, LTD.

DATE 2/13/89

THIS DRAWING HAS BEEN PHOTOGRAPHICALLY REDUCED BY REPRODUCTION CONSULTANTS, LTD.

DATE 8/31/89

FOR REFERENCE ONLY

THIS DRAWING HAS BEEN PHOTOGRAPHICALLY RESTORED BY REPRODUCTION CONSULTANTS, LTD.

DATE 5/18/88

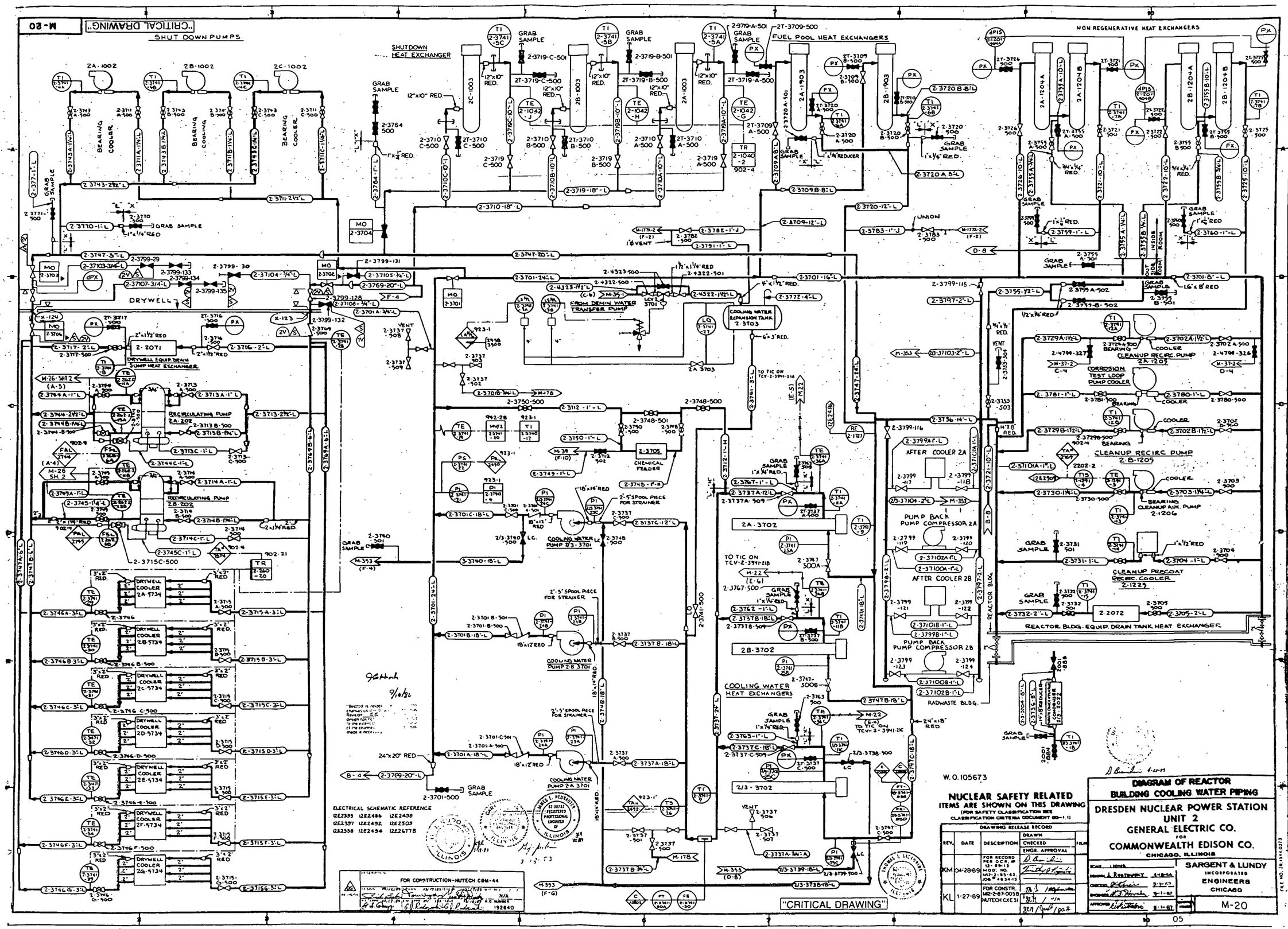

FOR REFERENCE ONLY

THIS DRAWING HAS BEEN PHOTOGRAPHICALLY REDUCED BY REPRODUCTION CONSULTANTS, LTD.

DATE 8/31/89

31

6/7

THIS DRAWING HAS BEEN PHOTOGRAPHICALLY REDUCED BY REPRODUCTION CONSULTANTS, LTD.

DATE 8/31/89

FOR REFERENCE ONLY

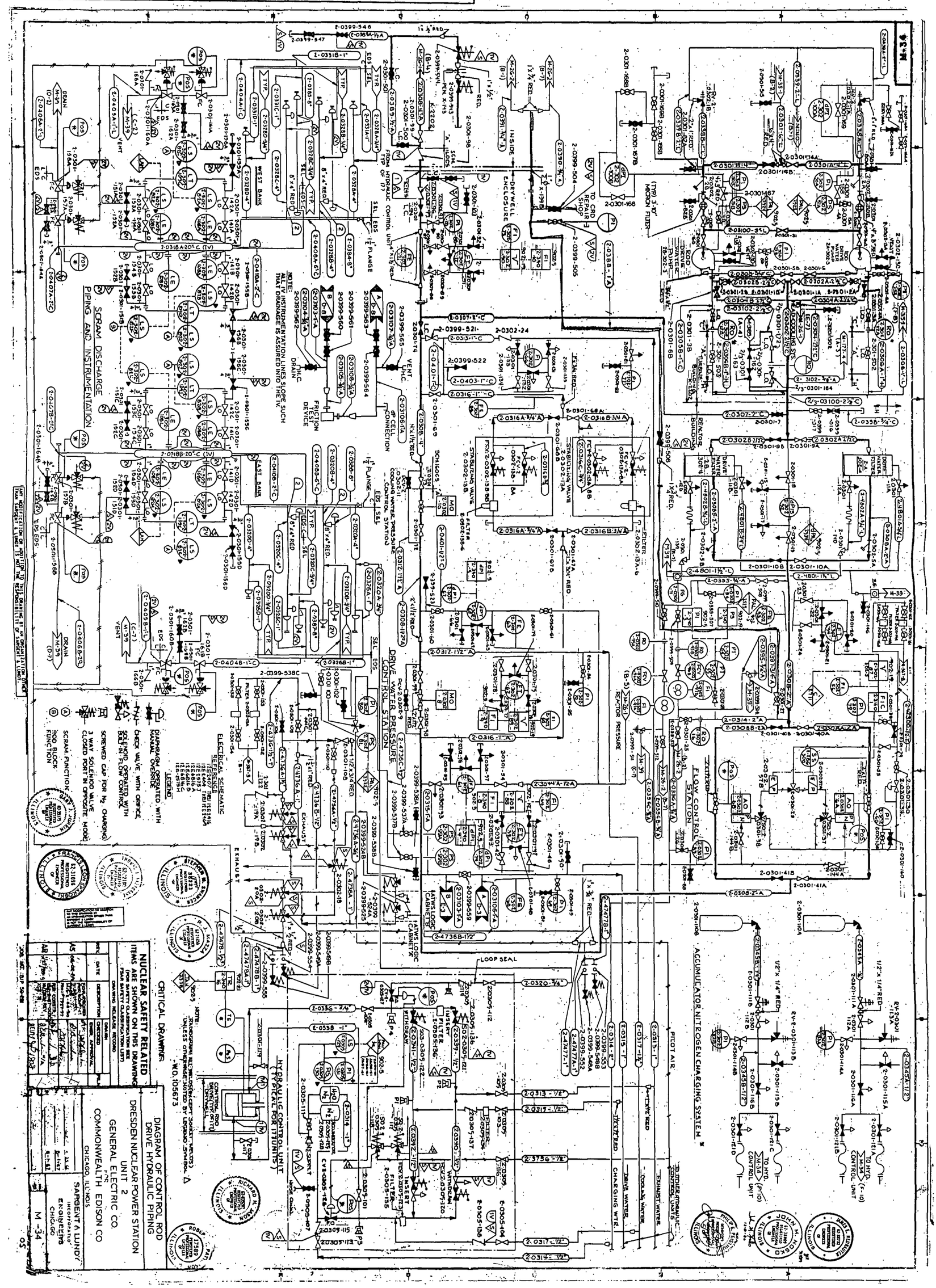

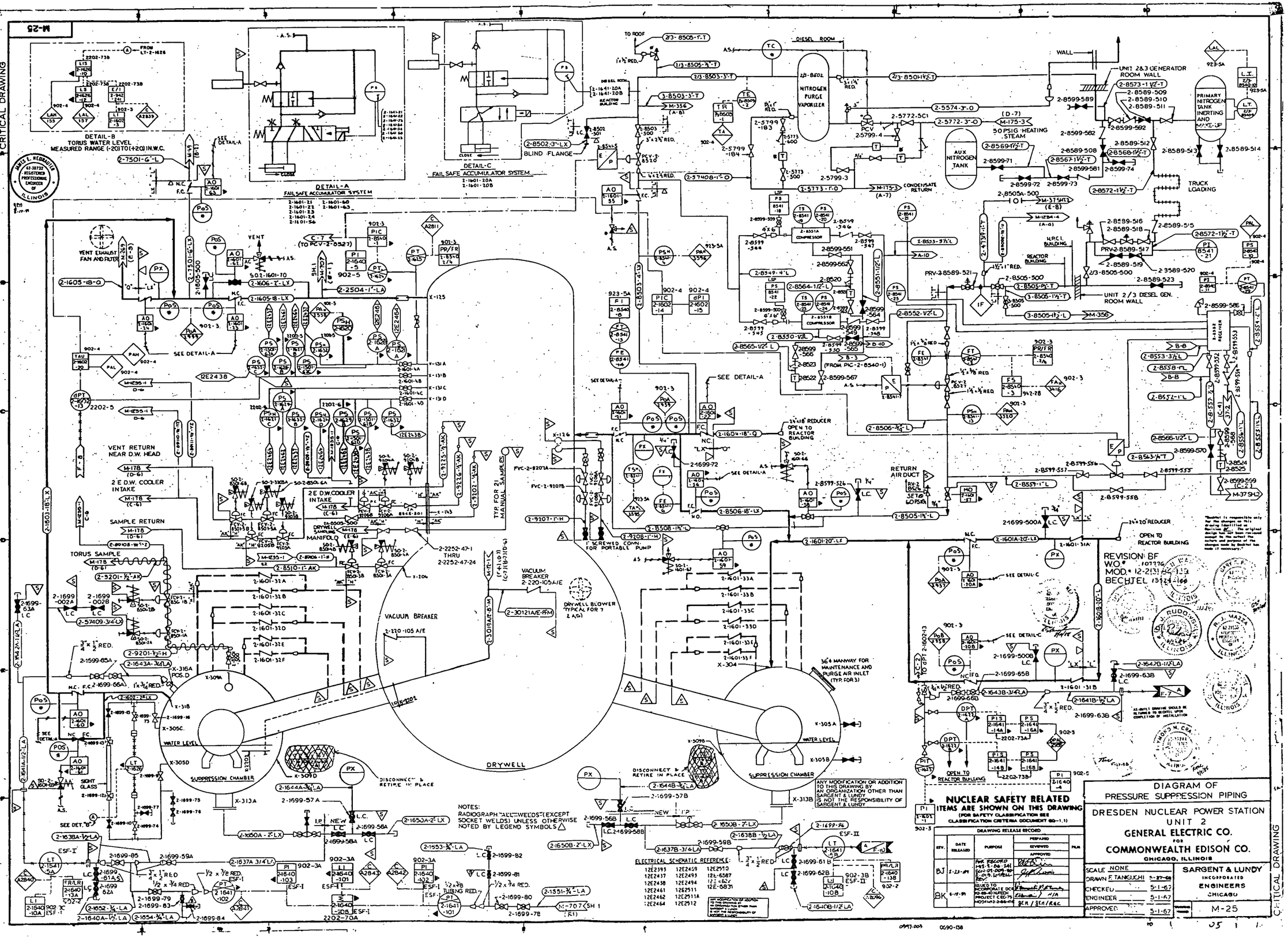

FOR REFERENCE ONLY

THIS DRAWING HAS BEEN PHOTOGRAPHICALLY REDUCED BY REPRODUCTION CONSULTANTS, LTD.

DATE 8/31/89

38

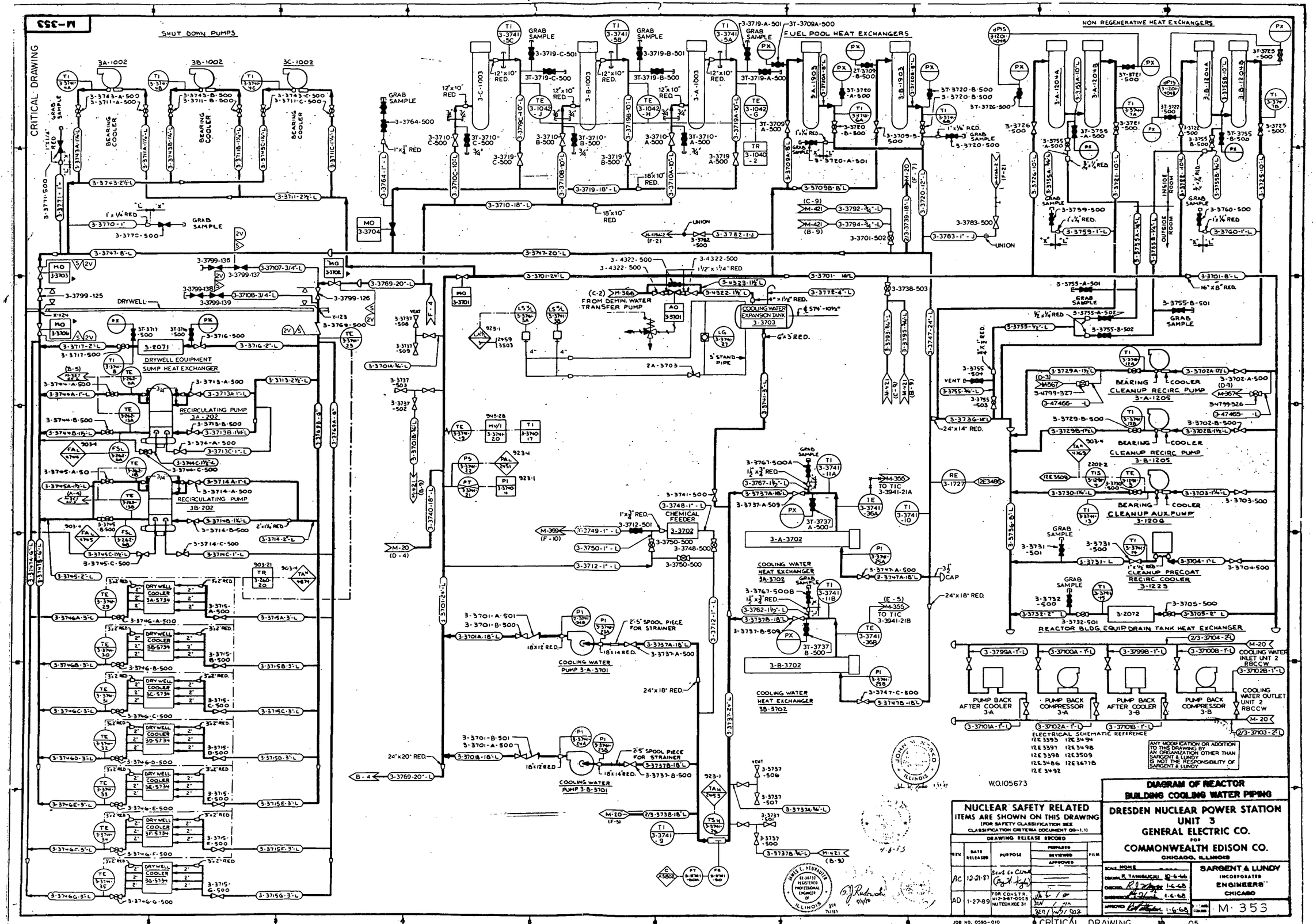

FOR REFERENCE ONLY

THIS DRAWING HAS BEEN PHOTOGRAPHICALLY REDUCED BY REPRODUCTION CONSULTANTS, LTD.

DATE 8/31/89

FOR REFERENCE ONLY

THIS DRAWING HAS BEEN PHOTOGRAPHICALLY REPRODUCED BY REPRODUCTION CONSULTANTS, LTD.

DATE 8/31/89

THIS DRAWING HAS BEEN PHOTOGRAPHICALLY RESTORED BY REPRODUCTION CONSULTANTS, LTD.

DATE 5/18/88