Entergy Operations, Inc.
1448 S.R. 333
Russellville, AR 72802
Tel 479-858-3110

Richard L. Anderson
ANO Site Vice President

10 CFR 50.90

2CAN071701

July 17, 2017

U.S. Nuclear Regulatory Commission
Attn: Document Control Desk
Washington, DC 20555

SUBJECT: License Amendment Request
Application for Technical Specification Improvement to Provide Actions for Emergency Feedwater Pump Inoperability Consistent with NUREG-1432
Arkansas Nuclear One, Unit 2
Docket No. 50-368
License No. NPF-6

Dear Sir or Madam:

In accordance with the provisions of 10 CFR 50.90 of Title 10 of the Code of Federal Regulations (10 CFR), Entergy Operations, Inc. (Entergy), is submitting a request for an amendment to the technical specifications (TS) for Arkansas Nuclear One, Unit 2 (ANO-2).

The proposed amendment establishes Actions and Allowable Outage Times (AOTs) in ANO-2 TS 3.7.1.2, "Emergency Feedwater System," for several combinations of inoperable Emergency Feedwater (EFW) trains consistent with NUREG-1432, Standard Technical Specifications for Combustion Engineering Plants," Revision 4. Revision 4 of NUREG-1432 includes changes incorporated by Technical Specification Task Force (TSTF)-340, "Allow 7 Day Completion Time for a Turbine-Driven AFW Pump Inoperable" and TSTF-412, "Provide Actions for One Steam Supply to Turbine Driven AFW/EFW Pump Inoperable," Revision 3. TSTF-340 provided the original 7-day AOT for one steam supply to the turbine-driven EFW pump being inoperable and an AOT for the turbine-driven EFW pump being inoperable in Mode 3.

TSTF-412, in part, established changes to the TS that provided specific Actions: (1) for when the motor driven EFW train is inoperable at the same time and; (2) for when the turbine driven EFW train is inoperable either (a) due solely to one inoperable steam supply, or (b) due to reasons other than one inoperable steam supply. The availability of this technical specification improvement was announced in the Federal Register on July 17, 2007 (72 FR 39089).

The ANO-2 TSs have not been converted to the Standard Technical Specifications (STS) of NUREG-1432. The current ANO-2 EFW TS only contains one Action governing single EFW train inoperability. The related STS version provides multiple Actions depending on specific

EFW trains or components which are inoperable, including an Action to avoid plant transients when both EFW trains are inoperable. A plant shutdown removes the normal Main Feedwater system as a source of decay heat removal and can place significant reliance on the EFW system as potentially the only remaining feedwater supply to the Steam Generators. The STS Actions established for the EFW system improve overall plant safety by avoiding transient risks where appropriate.

Attachment 1 provides a description and assessment of the proposed change and confirmation of applicability. Attachment 2 provides the existing TS page(s) marked-up to show the proposed change. Attachment 3 provides revised (clean) TS pages. Attachment 4 provides the existing TS Bases pages marked-up to reflect the proposed change, for information only. There are no new regulatory commitments associated with this proposed change.

Entergy requests approval of the proposed license amendment by August 1, 2018, with the amendment being implemented within 90 days.

In accordance with 10 CFR 50.91, a copy of this application, with attachments, is being provided to the designated Arkansas State Official.

If you have any questions or require additional information, please contact Stephenie Pyle at 479-858-4704.

I declare under penalty of perjury that the foregoing is true and correct.
Executed on July 17, 2017.

Sincerely,

ORIGINAL SIGNED BY RICHARD L. ANDERSON

RLA/dbb

Attachments:

1. Evaluation of the Proposed Change
2. Proposed Technical Specification Changes (Mark-Up)
3. Revised Technical Specification Pages
4. Proposed Technical Specification Bases Changes (Mark-Up) – For Information Only

cc: Mr. Kriss M. Kennedy
Regional Administrator
U. S. Nuclear Regulatory Commission
RGN-IV
1600 East Lamar Boulevard
Arlington, TX 76011-4511

NRC Senior Resident Inspector
Arkansas Nuclear One
P. O. Box 310
London, AR 72847

U. S. Nuclear Regulatory Commission
Attn: Mr. Thomas Wengert
MS O-08B1
One White Flint North
11555 Rockville Pike
Rockville, MD 20852

Mr. Bernard R. Bevill
Arkansas Department of Health
Radiation Control Section
4815 West Markham Street
Slot #30
Little Rock, AR 72205

Attachment 1 to

2CAN071701

EVALUATION OF THE PROPOSED CHANGE

EVALUATION OF THE PROPOSED CHANGE

1.0 SUMMARY DESCRIPTION

The proposed amendment would modify Technical Specifications (TSs) associated with Arkansas Nuclear One, Unit 2 (ANO-2) Renewed Operating License NPF-6. The proposed change affects Actions and Allowable Outage Times (AOTs) in ANO-2 TS 3.7.1.2, "Emergency Feedwater System," for several combinations of inoperable Emergency Feedwater (EFW) trains consistent with NUREG-1432, Standard Technical Specifications for Combustion Engineering Plants," Revision 4. Revision 4 of NUREG-1432 includes changes incorporated by Technical Specification Task Force (TSTF)-340, "Allow 7 Day Completion Time for a Turbine-Driven AFW Pump Inoperable" and TSTF-412, "Provide Actions for One Steam Supply to Turbine Driven AFW/EFW Pump Inoperable," Revision 3. TSTF-340 provided the original 7-day AOT for one steam supply to the turbine-driven EFW pump being inoperable and an AOT for the turbine-driven EFW pump being inoperable in Mode 3. TSTF-340 was generically approved by the NRC on March 16, 2000 (ML003700562).

TSTF-412, in part, established changes to the TS that provided specific Actions: (1) for when the motor driven EFW train is inoperable at the same time and; (2) for when the turbine driven EFW train is inoperable either (a) due solely to one inoperable steam supply, or (b) due to reasons other than one inoperable steam supply. The availability of this technical specification improvement was announced in the Federal Register on July 17, 2007 (72 FR 39089)

The ANO-2 TS Bases contains significantly less information than that of the STS EFW Bases. Therefore, the associated TS Bases are revised to address the TS changes proposed, consistent with the STS, although the final level of detail may be somewhat less than that contained in the STS.

2.0 DETAILED DESCRIPTION

ANO-2 is a Combustion Engineering design. The ANO-2 EFW system is designed to provide means of supplying water to the intact Steam Generator(s) (SG) following a postulated main steam line rupture or loss of Main Feedwater (MFW) to remove reactor decay heat and provide for cooldown of the Reactor Coolant System (RCS) to within the temperature and pressure at which the shutdown cooling (SDC) system can be placed in operation. Redundancy of components is provided to guarantee operation in the event of a single failure of a mechanical or electrical component within the system. Redundancy of power supplies is also provided to meet the diversity requirement of NRC branch technical position (BTP) 10-1, "Design Guidelines for Auxiliary Feedwater System Pump Drive and Power Supply Diversity for Pressurized Water Reactor Plants."

The system employs two safety related pumps (turbine-driven and motor-driven) with two independent feedwater trains, each capable of supplying either or both of the two SGs. Steam can be supplied to the turbine driver of the turbine-driven EFW pump from either or both main steam headers. A simplified schematic of the steam supply system to the turbine-driven EFW pump is provided below.

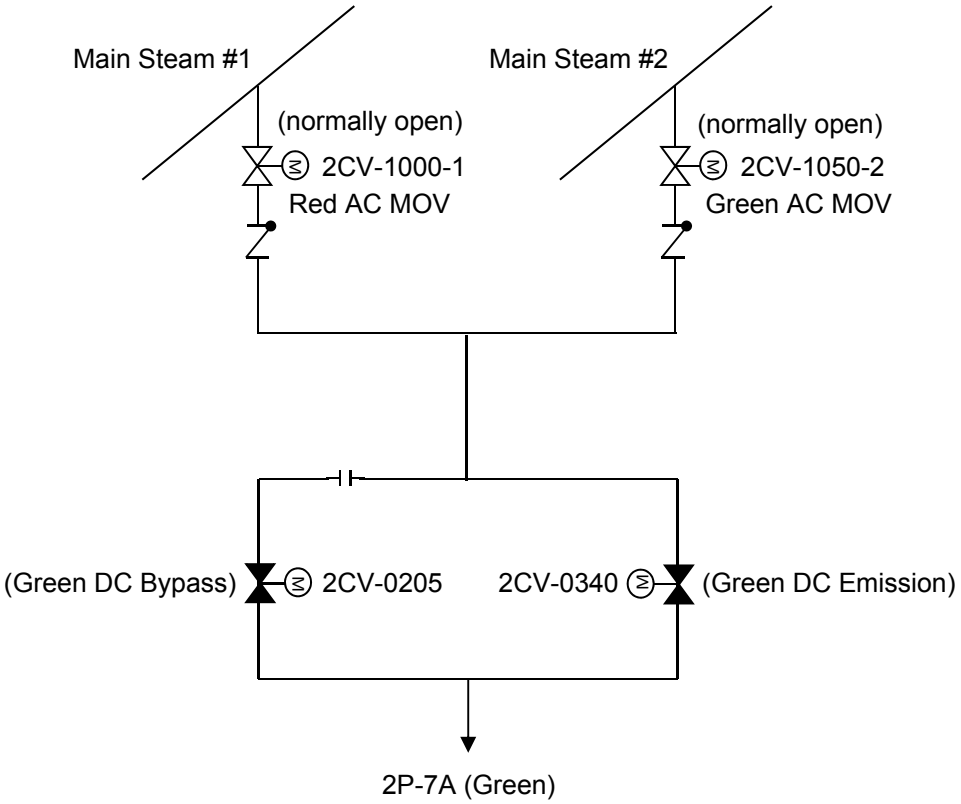

The EFW system is designed with a non-safety auxiliary feedwater (AFW) pump which may be used to supply water to the SGs during non-emergency conditions to avoid challenging the safety-related EFW pumps. The AFW pump is capable of supplying sufficient water to the SGs for heat loads of approximately 4% of full power at maximum SG pressure. Because the AFW pump is operated from a non-vital power source, this pump is not credited in the accident analyses.

During an emergency condition, the safety-related EFW pumps (2P-7A and 2P-7B) are designed to automatically supply water to the SGs upon an Emergency Feedwater Actuation Signal (EFAS) signal or a Diverse Emergency Feedwater Actuation Signal (DEFAS) signal. In addition, in the unlikely failure of both safety-related EFW pumps during an emergency condition, the AFW pump can be manually actuated to supply water to the SGs, provided non-vital power remains available to the site.

Further system information is contained in the ANO-2 Safety Analysis Report (SAR), Section 10.4.9.

The proposed amendment would modify ANO-2 TS 3.7.1.2 to provide Actions and AOTs consistent with Revision 4 of NUREG 1432, adjusted to account for ANO-2 TS formatting and usage rules. The following provide a high-level summary of changes:

1. The current ANO-2 TS Action for single EFW train inoperability is maintained, consistent with Condition B of NUREG-1432.

2. Actions are added to address a condition where the turbine-driven EFW pump is inoperable solely as a result of one of its two steam supply valves being inoperable, or if this pump is inoperable in Mode 3, consistent with Condition A of NUREG-1432.

3. An Action is added to address a condition where the turbine-driven EFW pump is inoperable solely as a result of one of its two steam supply valves being inoperable AND the motor-driven EFW pump is inoperable simultaneously, consistent with Condition C of NUREG-1432.

4. The plant shutdown requirement of the current ANO-2 TS Action is separated into an individual Action requiring plant shutdown if any of the above Actions are not met, consistent with Condition D of NUREG-1432.

5. An Action is added to address both EFW trains being inoperable simultaneously, consistent with Condition E of NUREG-1432.

3.0 TECHNICAL EVALUATION

The ANO-2 TSs have not been converted to the STS of NUREG-1432. The current ANO-2 EFW TS only contains one Action governing single EFW train inoperability. The related STS version provides multiple Actions depending on specific EFW trains or components which are inoperable, including an Action to avoid plant transients when both EFW trains are inoperable. A plant shutdown removes the normal MFW system as a source of decay heat removal and can place significant reliance on the EFW system as potentially the only remaining feedwater supply to the SGs, given that the AFW pump is powered from a non-vital source which may not be available post-accident. The STS Actions established for the EFW system improve overall plant safety by avoiding transient risks where appropriate. The proposed changes are consistent with Revision 4 of NUREG 1432.

<u>Comparison of Changes with STS</u>

The changes are consistent with NUREG-1432, Revision 4 (heretofore referred to as STS), which incorporates TSTF-340 and TSTF-412. TSTF-340 provided the original 7-day AOT for one steam supply to the turbine-driven EFW pump being inoperable and an AOT for the turbine-driven EFW pump being inoperable in Mode 3. TSTF-412, in part, established changes to the TS that provided specific Actions: (1) for when the motor driven EFW train is inoperable at the same time and; (2) for when the turbine driven EFW train is inoperable either (a) due solely to one inoperable steam supply, or (b) due to reasons other than one inoperable steam supply.

As stated previously, the proposed changes are incorporated in the ANO-2 old standard TS format. Differences in wording between the ANO-2 TS and NUREG 1432 are not necessarily discussed below where a change to the ANO-2 TS is not being proposed, provided the intent of NUREG 1432 is met. Administrative changes are also included to provide proper use of language/grammar or greater consistency with NUREG 1432: For ease of review, each comparison below includes the markup of the subject TS statement copied from the TS markup pages included in Attachment 2 of this letter, and a copy of the associated NUREG 1432, Revision 4, text.

1. The ANO-2 acronym "EFW" is added to the ANO-2 TS title, consistent with NUREG 1432 use of "AFW". The "EFW" acronym also replaces other references to "emergency feedwater" throughout the ANO-2 TS. Note that EFW is the ANO-2 equivalent to the AFW term used in the STS. These variations are administrative in nature.

ANO-2 TS	EMERGENCY FEEDWATER (EFW) SYSTEM
NUREG 1432	Auxiliary Feedwater (AFW) System

2. The ANO-2 LCO statement is revised to mimic the NUREG 1432 LCO. In accordance with the TS Definition of "operable," all required support features of a TS-required component must also be operable. Therefore, the current detail contained in the ANO-2 EFW TS LCO is removed in favor of the STS LCO statement. This change does not reduce the requirements for EFW train operability.

   The ANO-2 LCO statement maintains the reference to "two" EFW pumps, consistent with the ANO-2 design. The number of pumps (trains) is bracketed in the STS, which permits individual plants to designate the number of trains available at a given site. NUREG 1432 was written to accommodate plants that may have two turbine-driven and/or two motor-driven EFW pumps. ANO-2 has only one turbine-driven and one-motor driven EFW pump (both 100% capacity trains).

ANO-2 TS	3.7.1.2 Two ~~emergency feedwater~~ EFW trains~~pumps and associated flow paths~~ shall be OPERABLE~~ with:~~ ~~a. One motor driven pump capable of being powered from an OPERABLE emergency bus, and~~ ~~b. One turbine driven pump capable of being powered from an OPERABLE steam supply system~~.
NUREG 1432	[Three] AFW trains shall be OPERABLE.

3. A hyphen is added in "motor driven" and "turbine driven" statements as an administrative enhancement. This addition does not conflict with the relevant NUREG 1432 TS. Example:

ANO-2 TS	a. With the turbine-driven EFW train inoperable…
NUREG 1432	A. [Turbine driven AFW train inoperable

4. The current licensing basis modes of applicability are maintained. NUREG 1432 contains a bracketed option to include Mode 4 (when SGs are relied upon for heat removal); however, the ANO-2 EFW system TS applicability is Modes 1, 2, and 3 only. In accordance with ANO-2 TS 3.4.1.3, "Reactor Coolant System – Shutdown," two decay heat removal methods are required to be operable in Modes 4 and 5, either via the SGs or the Shutdown

Cooling (SDC) system. If one or more SGs are chosen as a heat removal method credited for meeting TS 3.4.1.3, the SG is required to have a feedwater source in accordance with the TS Definition of "operable". Therefore, including the bracketed Mode 4 statement in the ANO-2 EFW TS Applicability would be redundant to the requirements of ANO-2 TS 3.4.1.3 and subsequently, is unnecessary.

Because the aforementioned bracketed applicability is not adopted, the NUREG 1432 LCO Note which states:

> *Only one AFW train, which includes a motor driven pump, is required to be OPERABLE in MODE 4.*

is also unnecessary and not adopted. In addition, the ANO-2 turbine-driven EFW pump is expected to be capable of supporting decay heat removal via a SG in the upper regions of Mode 4 (for ANO-2, Mode 4 spans a Reactor Coolant System temperature range of > 200 °F to < 300 °F). Nevertheless, the above NUREG 1432 LCO Note is not consistent with the ANO-2 EFW modes of applicability and, therefore, is not included in the proposed amendment.

ANO-2 TS	APPLICABILITY: MODES 1, 2, and 3
NUREG 1432	----------NOTE---------- Only one AFW train, which includes a motor driven pump, is required to be OPERABLE in MODE 4. ---------- APPLICABILITY: MODES 1, 2, and 3, [MODE 4 when steam generator is relied upon for heat removal].

5. Because a number of Actions are being added to the ANO-2 EFW TS as a result of this amendment request, the section title "ACTION" is change to be plural. This is an administrative change only.

   In addition, the current ANO-2 EFW Actions Note associated with Specification 3.0.4.b applicability is consistent with the STS. This Note prevents increasing operational modes when the LCO is not met. However, because additional Notes are being adopted in support of this amendment request, the Specification 3.0.4.b Note is revised as "Note 1" and a "1" designator is placed next to the ACTIONS term at the beginning of the section. The location of this designator is consistent with NUREG 1432 in that Note 1 is applicable to all conditions listed.

ANO-2 TS	ACTIONS:[1] NOTE 1: Specification 3.0.4.b is not applicable.
NUREG 1432	----------NOTE---------- LCO 3.0.4.b is not applicable. ----------

6. A new Note 2 is adopted to mimic the Note contained in Condition A of the EFW STS, with a "2" designator added/located in the new Action "a" of the ANO-2 TS. The "2" designator is tied to the Mode 3 portion of new Action "a", consistent with the STS. The Note limits the applicability of the Action for an inoperable turbine-driven EFW pump in Mode 3 to when the unit has not entered Mode 2 following a refueling outage. Action "a" allows one EFW train to be inoperable for 7 days vice the 72-hour AOT associated with Action "b". This longer AOT is based on the reduced decay heat following refueling and prior to the reactor being critical, consistent with the STS.

ANO-2 TS	NOTE 2: Only applicable if MODE 2 has not been entered following refueling. a. With the turbine-driven EFW train inoperable in MODE 3 following refueling[2],…
NUREG 1432	A. [Turbine driven AFW train inoperable due to one inoperable steam supply. OR ----------NOTE---------- Only applicable if MODE 2 has not been entered following refueling. ---------- One turbine driven AFW pump inoperable in MODE 3 following refueling.

7. A new Note 4 is adopted consistent with the Note contained in Required Action E.1 of the EFW STS. The ANO-2 "ACTIONS" text is retained in lieu of the "Required Actions" text contained in the NUREG. The difference in wording is administrative in nature and the intent of the NUREG Note is maintained. Action "e" is discussed further later in this amendment request.

ANO-2 TS	NOTE 4: LCO 3.0.3 and all other LCO ACTIONS requiring MODE changes are suspended until one EFW train is restored to OPERABLE status. e. With both EFW trains inoperable, immediately initiate action to restore one EFW train to an OPERABLE status.[3]
NUREG 1432	E.1 ----------NOTE---------- LCO 3.0.3 and all other LCO Required Actions requiring MODE changes are suspended until one AFW train is restored to OPERABLE status. ---------- Initiate action to restore one AFW train to OPERABLE status.

8. A new Action "a" is added which adopt the wording of TSTF-340 as modified by TSTF-412 (consistent with Revision 4 of NUREG 1432). The STS wording is placed in one statement which includes the Condition, Required Action, and Completion Time of the NUREG, consistent with ANO-2 TS formatting. The STS Condition for Mode 3 states, in part" "One" turbine-driven pump (emphasis added). The "One" term is not adopted into the ANO-2 TS since ANO-2 only has one turbine-driven pump. Therefore, it is unnecessary to include the "One" term in new Action "a", which could lead to confusion as Operators attempt to apply the TS specific to the ANO-2 design. The exclusion of this term does not change the intent of the Condition or associated Required Actions. Entergy considers this variation to be administrative in nature.

   ACTION "a" is added to provide a more explicit requirement for both steam supplies for the turbine-driven EFW pump to be operable. The proposed action allows one of the two steam supplies to be inoperable for up to 7 days, consistent with the STS. The 7-day AOT was established in the STS based on the redundant operable steam supply line from the other SG, the availability of the redundant operable motor-driven EFW pump, and the low probability of an event occurring that would require use of the inoperable steam supply line. The STS basis for this change is applicable to ANO-2.

   In addition, Action "a" also provides a 7-day AOT for an inoperable turbine-driven EFW pump in Mode 3 following a refueling outage, if Mode 2 has not yet been entered. As discussed in TSTF-340 and the STS Bases, this change is appropriate based on the minimal decay heat levels under the stated plant condition, the redundant capabilities afforded by the EFW system, the time needed to perform repairs and testing of the turbine-driven pump, and the low probability of a design basis accident (DBA) occurring during this time period that would require the operation of the turbine-driven EFW pump. All of these reasons, except the minimal decay heat level, would apply any time a turbine-driven EFW pump is inoperable (including turbine-driven EFW pump inoperability due to a single steam supply being inoperable). The STS basis for this change is applicable to ANO-2.

ANO-2 TS	a. With the turbine-driven EFW train inoperable in MODE 3 following refueling[2], <u>OR</u> with the turbine-driven EFW train inoperable due to one inoperable steam supply, restore the turbine-driven EFW train to OPERABLE status within 7 days.		
NUREG 1432	A. [Turbine driven AFW train inoperable due to one inoperable steam supply. <u>OR</u> ----------NOTE---------- Only applicable if MODE 2 has not been entered following refueling. ---------- One turbine driven AFW pump inoperable in MODE 3 following refueling.	A.1 Restore affected equipment to OPERABLE status.	7 days]

9. The current ANO-2 EFW TS Action is labeled Action "b" and modified to be consistent with Condition B of the EFW STS, along with the associated Required Action and Completion Time. The term "Condition" is replaced with the ANO-2 term "ACTION", and the STS, Condition B, phrase "in MODE 1, 2, or 3" is not included in the ANO-2 version since EFW is not required in Mode 4 within the ANO-2 EFW TS (see Item 4 above). These variations do not conflict with the intent of the EFW STS version of Condition B. The current 72-hour AOT is equivalent to the Completion Time contained in Condition B of the EFW STS.

ANO-2 TS	b. With one EFW~~emergency feedwater~~ train~~pump~~ inoperable for reasons other than ACTION a, restore the inoperable train~~pump~~ to OPERABLE status within 72 hours.		
NUREG 1432	B. One AFW train inoperable in MODE 1, 2, or 3 [for reasons other than Condition A].	B.1 Restore AFW train to OPERABLE status.	72 hours

10. A new Action "c" is added consistent with Condition C of the EFW STS, including the associated Required Action and Completion Time. The term "One" is not included in the new action with reference to the motor-driven EFW pump since ANO-2 has only one motor-driven EFW pump. This variation is administrative in nature.

With respect to the Completion Time associated with new Actions "c", Entergy has chosen a 24-hour Completion Time. The Action accommodates restoration of either the inoperable steam supply to the turbine-driven EFW pump or restoration of the motor-driven EFW pump, such that at least one EFW train is returned to an operable status. TSTF-412, the associated NRC SE, and a Reviewer's Note contained in the TSTF-412 mark-up of the TS Bases for this Action only permits adoption of a 48-hour Completion Time where plant design includes two full capacity motor-driven EFW pumps. As discussed previously, the ANO-2 design does not include a second motor-driven EFW pump. As stated in TSTF-412 and repeated in an NRC letter to the TSTF dated October 30, 2015, plants meeting the following conditions should adopt the shorter 24-hour Completion Time.

> *A new Condition C is proposed that will require restoring an AFW train to OPERABLE status in 24 hours if one motor driven AFW train is inoperable and the turbine driven AFW train is inoperable due to one steam supply inoperable. This Completion Time is applicable when the condition could result in the inability of the AFW system to provide 100% of the flow required by the safety analysis for the FLB or the MSLB, whichever is most limiting, assuming no additional single failure.*

Because the ANO-2 design does not include an additional EFW pump beyond the existing pumps, sufficient EFW flow would not be available if the remaining steam supply to the turbine-driven EFW pump was rendered inoperable with respect to the pre-accident configuration described by STS Condition C. Therefore, the 24-hour Completion Time proposed by TSTF-412 for STS Condition C is adopted into the new ANO-2 Action "c".

ANO-2 TS	c. With the turbine-driven EFW train inoperable due to one inoperable steam supply AND the motor-driven EFW train inoperable, restore either the steam supply to the turbine-driven train OR the motor-driven EFW train to OPERABLE status within 24 hours.		
NUREG 1432	C. Turbine driven AFW train inoperable due to one inoperable steam supply. AND One motor driven AFW train inoperable.	C.1 Restore the steam supply to the turbine driven train to OPERABLE status. OR C.2 Restore the motor driven AFW train to OPERABLE status.	[24 or 48] hours [24 or 48] hours

11. A new Action "d" is added consistent with Condition D of the EFW STS, including the associated Required Action to place the unit in a Mode 4 end state (which exits the mode of applicability respective to the ANO-2 EFW TS). The original ANO-2 time allowed to reach Mode 4 (12 hours) is maintained, with no reference added for a time to be in Mode 3. Condition D of the EFW STS requires the unit to be placed in Mode 3 within 6 hours and Mode 4 within 18 hours upon initial Condition entry (note the 18-hour Completion Time is bracketed and expected to be site-specific). The ANO-2 12-hour time to reach Mode 4 conditions is conservative to the bracketed 18 hours provided in NUREG 1432 and is consistent with other ANO-2 TSs (reference Actions associated with ANO-2 TSs 3.3.3.5, 3.3.3.6, 3.4.1.2, 3.4.3, 3.4.4, 3.7.1.1, 3.7.1.3, and 3.7.1.5). These ANO-2 TSs, which are applicable only in Modes 1, 2, or 3 (same mode range as the ANO-2 EFW TS), consistently provide a 12-hour period of time to reach Mode 4 without stating a time to reach Mode 3.

    The absence of a 6-hour time to reach Mode 3 has no appreciable impact on plant safety. As defined in the ANO-2 TSs, Mode 3 equates to a Reactor Coolant System temperature range of ≥ 300 °F up to the temperature in which the reactor is made critical (545 °F). With consideration of maintaining margin to cooldown limits imposed by the ANO-2 TSs and the preparations necessary to commence a cooldown, it is expected that approximately 5 hours will be required to transition from a post-shutdown condition at normal operating temperature to Mode 4. Therefore, it is necessary for the unit to transition from full power Mode 1 conditions to Mode 3 in approximately 6 hours from the time Action "d" is entered. Note if it is known recovery of the EFW system is not imminent, unit shutdown's are commenced promptly after procedures and crew briefings are completed, with the shutdown itself (from 100% power to Mode 3) normally being accomplished in under two hours. Based on the above, this variation does not result in a significant difference with the EFW STS in that the plant will be placed in Mode 4 as the desired end state in less than the 18 hours as potentially permitted by the STS.

To maintain consistency with other ANO-2 TSs, “Hot Shutdown” is maintained in new Action “d” in lieu of the “Mode 3” reference of the EFW STS. These terms are equivalent as defined in Section 1.0, Table 1.1, of the ANO-2 TSs. This is considered an administrative variation only.

ANO-2 TS	d. With ACTION a, b, or c not met, ~~or~~ be in HOT SHUTDOWN within the next 12 hours.		
NUREG 1432	D. Required Action and associated Completion Time of Condition A [,B, or C] not met. [OR [Two] AFW trains inoperable in MODE 1, 2, or 3 for reasons other than Condition C.]	D.1 Be in MODE 3. AND D.2 Be in MODE 4.	6 hours [18] hours

12. A new Action “e” is added consistent with Condition E of the EFW STS, including the associated Required Action and Completion Time. The Note associated with STS Required Action E.1 is also adopted as discussed in Item 7 above. Because the ANO-2 design consists of two trains and only one pump per train, the STS bracketed term “Three” is replaced with “both” in the new ANO-2 Action “e”. This variation does not conflict with the intent of the STS Condition

    New Action “e” specifies that with the EFW system inoperable such that the system is unable to deliver 100% of required flow to the SGs, immediate action must be taken to restore the ability to provide 100% flow capability as credited in the safety analysis. The proposed action also clarifies that TS Actions requiring mode changes are suspended until the EFW system is capable of delivering 100% flow to the SGs (i.e., at least one EFW train restored to operable status). While in this condition, the EFW system is seriously degraded and unable to provide sufficient flow to the SGs to cool the RCS down to SDC entry conditions, if called upon. Any mode or power level changes should be avoided when in this condition in order to minimize challenges to the decay heat removal function.

    Notwithstanding the above, a deviation from the STS is required. The STS version of the EFW TS was written for plants having three or more EFW pumps. While an attempt was made in the original version of the EFW STS to accommodate two-pump plants, STS Condition E does not support a two-pump plant as written. This was confirmed with Excel Services Corporation (the keeper of the STS).

    STS Condition E, which was not modified by TSTF-340 or TSTF-412, describes a plant configuration with no operable EFW train. For two-pump plants, this conflicts with new Action “c”, which also describes a configuration consisting of no operable EFW trains, although the turbine-driven train remains available (capable of 100% flow) since one steam supply to the turbine-driven pump remains available. In the Action “c” configuration, it is appropriate to enter Action “d” and perform a plant shutdown if one train is not restored to an operable status within 24 hours, since the turbine-driven train remains fully capable of removing decay heat following securing of the non-safety related Main Feedwater System

post-shutdown. However, STS Condition E was intended to capture a configuration where neither EFW train remained capable of supply required flow to remove all decay heat loads post-shutdown. In this event, the plant should not be maneuvered until at least one EFW train is restored.

To properly differentiate between the two-pump inoperability configurations described by Actions "c" and "e", a Note is added to Action "e" as follows:

NOTE 3: Not applicable when the turbine-driven EFW train is inoperable solely due to one inoperable steam supply.

The addition of the above Note permits proper application of Action "c" (and Action "d" when necessary) while allowing Action "e" to address all other circumstances that may have caused inoperability of both EFW trains. While this Note is a deviation from the STS, Entergy believes the Note effectively permits proper application of the intended actions established by NUREG-1432. The associated TS Bases are modified accordingly (see Attachment 4 of this letter).

ANO-2 TS	e. With both EFW trains inoperable, immediately initiate action to restore one EFW train to an OPERABLE status.[3,4]		
NUREG 1432	E. [[Three] AFW trains inoperable in MODE 1, 2, or 3.	E.1 ----------NOTE---------- LCO 3.0.3 and all other LCO Required Actions requiring MODE changes are suspended until one AFW train is restored to OPERABLE status. ---------- Initiate action to restore one AFW train to OPERABLE status.	Immediately]

13. EFW STS Condition F is not adopted as this applies only to Mode 4 configurations, which is beyond the applicability of the ANO-2 EFW TS (see Item 4 above). ANO-2 TS 3.4.1.3, "Reactor Coolant System – Shutdown" (applicable in Modes 4 and 5), sufficiently addresses a loss of heat removal with the following actions:

    a. *With less than the above required coolant loops OPERABLE, immediately initiate corrective action to return the required coolant loops to OPERABLE status as soon as possible and initiate action to make at least one steam generator available for decay heat removal via natural circulation. LCO 3.0.4.a is not applicable when entering HOT SHUTDOWN.*

    b. *With no coolant loop in operation, suspend all operations involving a reduction in boron concentration of the Reactor Coolant System and immediately initiate corrective action to return the required coolant loop to operation.*

Based on the above, and given the fact that EFW is not required in Mode 4 if both SDC trains are operable, the adoption of STS Condition F is not necessary.

ANO-2 TS	N/A		
NUREG 1432	F. Required AFW train inoperable in MODE 4.	F.1 ----------NOTE---------- LCO 3.0.3 and all other LCO Required Actions requiring MODE changes are suspended until one AFW train is restored to OPERABLE status. ---------- Initiate action to restore one AFW train to OPERABLE status.	Immediately

14. Surveillance Requirements (SRs) 3.7.1.2.a and 3.7.1.2.b are relocated from ANO-2 TS Page 3/4 7-5 to Page 3/4 7-6. This is an administrative change to accommodate room needed on Page 3/4 7-5 for the new Actions adopted for consistency with the STS.

15. ANO-2 EFW TS SR 4.7.1.2.a is consistent with EFW STS SR 3.7.5.1; therefore, no changes to the ANO-2 SR are proposed, other than application of the “EFW” acronym.

ANO-2 TS	4.7.1.2 Each EFW~~emergency feedwater~~ pump shall be demonstrated OPERABLE: a. At least once per 31 days by: 1. Verifying that each valve (manual, power operated or automatic) in the flow path that is not locked, sealed, or otherwise secured in position, is in its correct position.	
NUREG 1432	SR 3.7.5.1 Verify each AFW manual, power operated, and automatic valve in each water flow path and in both steam supply flow paths to the steam turbine driven pump, that is not locked, sealed, or otherwise secured in position, is in the correct position.	31 days

16. ANO-2 EFW TS SR 4.7.1.2.b is consistent with EFW STS SR 3.7.5.2 (including the SR Note); therefore, no changes to the ANO-2 SR are proposed, other than application of the "EFW" acronym.

ANO-2 TS	4.7.1.2 Each EFW~~emergency feedwater~~ pump shall be demonstrated OPERABLE: b. In accordance with the INSERVICE TESTING PROGRAM by: 1. Verifying the developed head of each EFW pump at the flow test point is greater than or equal to the required developed head. This surveillance requirement is not required to be performed for the turbine~~-~~-driven EFW pump until 24 hours after exceeding 700 psia in the steam generators.	
NUREG 1432	SR 3.7.5.2 ----------NOTE---------- Not required to be performed for the turbine driven AFW pump until [24] hours after reaching [800] psig in the steam generators. ---------- Verify the developed head of each AFW pump at the flow test point is greater than or equal to the required developed head.	In accordance with the Inservice Testing Program

17. Because all ANO-2 EFW SRs will be located only on TS Page 3/4 7-6, the SR continuation statement is deleted from this page. This is an administrative only change.

~~SURVEILLANCE REQUIREMENTS (Continued)~~

18. ANO-2 EFW TS SR 4.7.1.2.c.1 is consistent with EFW STS SR 3.7.5.3. However, the phrase "on MSIS or EFAS test signals" is replaced with the STS wording of "on actual or simulated MSIS and EFAS actuation signals." The wording change permits credit for an actual actuation for satisfying the testing requirements, consistent with the STS. In addition, the "or" is changed to "and" to ensure the pumps are verified to start on both actuation signals as required by design. Although this is the current ANO-2 practice, this latter change is expected to remove ambiguity. Note that automatic actuation testing of the EFW pumps and associated system valves is performed as part of Engineered Safety Features (ESF) testing in accordance with procedure OP-2305.003, "ESF Response Time Test," each refueling outage. The revised wording ensures the intent of the STS is met by verifying the associated EFW valves appropriately actuate on both a Main Steam Isolation Signal (MSIS) and an Emergency Feedwater Actuation Signal (EFAS). The STS Notes associated with STS SR 3.7.5.3 are discussed later in this amendment request.

The phrase "test signal(s)" is deleted where such appears under ANO-2 TS SR 4.7.1.2.c (including excerpts included under Item 19 below), being redundant to the MSIS/EFAS acronyms. This is an administrative wording change only.

ANO-2 TS	4.7.1.2 Each EFW~~emergency feedwater~~ pump shall be demonstrated OPERABLE: c. At least once per 18 months by: 1. Verifying that each automatic valve in the flow path actuates to its correct position on actual or simulated MSIS and~~or~~ EFAS~~ test signals~~.	
NUREG 1432	SR 3.7.5.3 ----------NOTE---------- 1. Not required to be performed for the turbine driven AFW pump until [24] hours after reaching [800] psig in the steam generators. 2. Not required to be met in MODE 4 when steam generator is relied upon for heat removal ---------- Verify each AFW automatic valve that is not locked, sealed, or otherwise secured in position, actuates to the correct position on an actual or simulated actuation signal.	18 months

19. ANO-2 EFW TS SRs 4.7.1.2.c.2 and 4.7.1.2.c.3 are consistent with EFW STS SRs 3.7.5.4. ANO-2 EFW TS SR 4.7.1.2.c.3 requires verification that the steam supply motor operated valve (MOV) actuates open, which for ANO-2, also verifies the steam-driven pump starts. However, since the ANO-2 EFW TS SR 4.7.1.2.c.3 wording is somewhat ambiguous, EFW TS SRs 4.7.1.2.c.2 and 4.7.1.2.c.3 are combined and replaced with the wording of EFW STS SRs 3.7.5.4. The revised wording ensures the intent of the STS is met by verifying both pumps are tested on EFAS.

    In addition, the phrase "when in Mode 1, 2, or 3" contained in EFW STS SR 3.7.5.4 is not included in the revised ANO-2 TS SR 4.7.1.2.c.2. All SRs must be met in the modes stated in the Applicability section of the related TS (reference TS 3.0.1 in either the STS or ANO-2 TSs); therefore, it is unnecessary to stipulate that the subject SR must be met in these modes. Following contact with EXCEL Services Corporation (the keeper of the STS), this phrase existed since Revision 0 of the NUREG with no explanation. In addition, the STS NUREGs for the other plant types do not contain this phrase. This phrase could lead to confusion with respect to the ANO-2 TS format and usage rules, as it could imply that these are the only modes in which the SR may be performed, contrary to the respective STS Bases which states the intent is to avoid plant transients. Performance of actuation testing in Modes 1, 2, or 3 would inject cold water into the SGs, resulting in a reactivity change (and respective power change in Modes 1 or 2). The absence of this phrase eliminates potential ambiguity while meeting the intent of the STS SR.

ANO-2 TS	4.7.1.2 Each EFW~~emergency feedwater~~ pump shall be demonstrated OPERABLE: c. At least once per 18 months by: 2. Verifying each EFW~~that the motor driven~~ pump starts automatically ~~up~~on ~~receipt of~~ an actual or simulated EFAS ~~test signal~~. ~~3. Verifying that the turbine driven pump steam supply MOV opens automatically upon receipt of an EFAS test signal.~~	
NUREG 1432	SR 3.7.5.4 ----------NOTE---------- 1. Not required to be performed for the turbine driven AFW pump until [24] hours after reaching [800] psig in the steam generators. 2. Not required to be met in MODE 4 when steam generator is relied upon for heat removal ---------- Verify each AFW pump starts automatically on an actual or simulated actuation signal when in MODE 1, 2, or 3.	18 months

20. STS SRs 3.7.5.3 and 3.7.5.4 are modified by two notes (illustrated above) which are not adopted for ANO-2. Note 1 permits delay of valve testing for the turbine-driven EFW pump; however, the ANO-2 EFW system is designed such that valve testing can be performed in any mode. Actuation testing is normally performed in Modes 5 or 6 during a refueling outage. In accordance with ANO-2 SR 4.7.1.2.b, the turbine-driven EFW pump itself is tested when adequate steam pressure is available in Mode 3. The ANO-2 SR 4.7.1.2.b turbine-driven EFW pump test verifies the steam valves are timed-open under normal or near-normal SG operating pressure while the ANO-2 SR 4.7.1.2.c.1 test verifies the valves open upon receipt of an actuation signal. The combination of the two tests verifies full operability of both EFW trains. Note that OP-2106.006, “Emergency Feedwater System Operations,” governs pump testing when tested absent a simulated actuation signal. Based on the ANO-2 EFW system design and testing capability, STS SR 3.7.5.3, Note 1, is not incorporated into the ANO-2 TSs.

    Note 2 addresses Mode 4 conditions, which is not an applicable mode with respect to the ANO-2 EFW TS, as discussed previously; therefore, this SR Note is not adopted.

21. ANO-2 EFW TS SR 4.7.1.2.d is consistent with EFW STS SR 3.7.5.4. However, the current ANO-2 SR includes reference to Mode 4 in the Frequency statement, unlike the STS which refers only to Modes 5 and 6, and when the reactor is defueled. The reference to Mode 4 is retained in the ANO-2 SR.

    Prior to 1997, the ANO-2 frequency for this SR was 18 months. In 1997, ANO-2 TS Amendment 188 revised several items within the ANO-2 EFW TS. As part of the amendment, the 18-month frequency associated with this SR was "modified to the ITS format" (as stated in the Entergy amendment request – Reference 8). Reference to Mode "4" was not included in any revision of NUREG 1432 because the EFW STS applicability included Mode 4 operations. Because the ANO-2 EFW TS applicability does not include Mode 4, there was a potential for the unit to remain in Mode 4 (or below) for > 30 days where the EFW system may be vulnerable to realignments since the system is not necessary required in Mode 4 (with the potential exception of meeting ANO-2 TS 3.4.1.3 as described in Item 4 above). The EFW STS Bases states (emphasis added):

    To further ensure AFW System alignment, the OPERABILITY of the flow paths is verified following extended outages to determine that no misalignment of valves has occurred.

    Based on the ANO-2 EFW TS modes of applicability, it is prudent to maintain reference to Mode 4 in the frequency portion of ANO-2 SR 4.7.1.2.d.

ANO-2 TS	d. By verifying proper alignment of the required EFW flow paths by verifying flow from the condensate storage tank to each steam generator. This SR is required to be verified prior to entering MODE 2 whenever plant has been in MODES 4, 5, 6, or defueled for > 30 days.		
NUREG 1432	SR 3.7.5.5	Verify each AFW manual, power operated, and automatic valve in each water flow path and in both steam supply flow paths to the steam turbine driven pump, that is not locked, sealed, or otherwise secured in position, is in the correct position.	Prior to entering MODE 2 whenever unit has been in MODE 5, MODE 6, or defueled for a cumulative period of > 30 days

The ANO-2 TS Bases contains significantly less information to assist plant Operators than that of the STS EFW Bases. Therefore, the associated TS Bases are revised to address the TS changes proposed, consistent with the STS, while in general maintaining the current level of detail. Page numbering of the TS Bases markup pages included in Attachment 4 will be revised appropriately upon implementation in accordance with the TS Bases Control Program (ANO-2 TS 6.5.14), following approval of this amendment request. The markup of affected TS Bases pages is included in Attachment 4 of this letter for information only.

Based on the above, adoption of the STS version of the EFW TS with noted exceptions maintains sufficient nuclear safety margin and, subsequently, protection of the public. In some respects, the adoption of the EFW STS provides additional margin to safety by clarifying that both steam supply valves are required for operability of the respective turbine-driven EFW train, and also provides appropriate response during conditions with no EFW train operable by ensuring unit transients are avoided until an EFW train can be restored. Therefore, Entergy has concluded that the proposed changes are acceptable.

4.0 REGULATORY EVALUATION

4.1 Applicable Regulatory Requirements/Criteria

Although Arkansas Nuclear One, Unit 2 (ANO-2) is a pre-General Design Criteria (GDC) plant, the ANO-2 Emergency Feedwater (EFW) system design meets the intent of GDCs 34 and 44 by ensuring 1) the capability to transfer heat loads from the reactor system to a heat sink under both normal operating and accident conditions; 2) the redundancy of components for performance of the safety function under accident conditions, assuming a single active component failure; and 3) the capability to isolate components, subsystems, or piping if required to maintain system safety function.

The following are excerpts from the ANO-2 Safety Analysis Report (SAR), Section 3.1.1, with respect to GDCs 34 and 44.

CRITERION 34 – RESIDUAL HEAT REMOVAL

A system to remove residual heat shall be provided. The system safety function shall be to transfer fission product decay heat and other residual heat from the reactor core at a rate such that specified acceptable fuel design limits and the design conditions of the Reactor Coolant Pressure Boundary are not exceeded.

Suitable redundancy in components and features, and suitable interconnections, leak detection, and isolation capabilities, shall be provided to assure that for onsite electric power system operation (assuming offsite power is not available) and for offsite electric power system operation (assuming onsite power is not available) the system safety function can be accomplished assuming a single failure.

Response

Residual heat removal capability is provided by the shutdown cooling system for reactor coolant temperature less than 275 °F. For temperatures greater than 275 °F, this function is provided by the steam generators. The design incorporates sufficient redundancy, interconnections, leak detection, and isolation, assuming failure of a single active component. Within appropriate design limits, either system will remove fission product decay heat at a rate such that specified acceptable fuel design limits and the design conditions of the RCPB will not be exceeded. The Shutdown Cooling (SDC) system and the steam generator auxiliaries are designed to operate either from off-site power or from onsite power sources.

CRITERION 44 - COOLING WATER

A system to transfer heat from structures, systems, and components important to safety to an ultimate heat sink shall be provided. The system safety function shall be to transfer the combined heat load of these structures, systems, and components under normal operating and accident conditions.

Suitable redundancy in components and features, and suitable interconnections, leak detection, and isolation capabilities, shall be provided to assure that for onsite electrical power system operation (assuming offsite power is not available) and for offsite electrical power system operation (assuming onsite power is not available) the system safety function can be accomplished assuming a single failure.

Response

Structures, systems and components important to safety are cooled by the Service Water System (SWS). The SWS is redundant with two 100 percent capacity trains and three 100 percent capacity pumps which can be operated either from off-site power or from onsite emergency power. The SWS consists of Seismic Category 1 and non-Seismic Category 1 portions. Non-Seismic Category 1 portions of the system are automatically isolated from the system upon receipt of a safety injection actuation signal. The ultimate heat sink for the SWS is either the Dardanelle Reservoir or the emergency cooling pond. Process radiation monitors will indicate any leakage of reactor coolant into the SWS.

Note that while the ANO-2 EFW pumps normally take suction from a Condensate Storage Tank, the assured suction source for EFW is the SWS. Based on the above, the ANO-2 design meets the intent of the subject GDCs.

4.2 Precedent

Adopting a NUREG 1432 version of a specific TS is normally performed within an overall conversion of a plant's entire TSs to the NUREG. Such complex conversions normally do not contain sufficient information to be of effective use when evaluating adoption of a single TS from the NUREG. Because TSTF-340 and TSTF-412 provide a basis for many of the configurations included in NUREG 1432, Revision 4, TS 3.7.5, "Emergency Feedwater (EFW) System," the following precedent is listed for those plants having previously adopted either of these TSTFs.

TSTF-340 adoption was approved for the Ft. Calhoun station on December 22, 2014 (Reference 2) and Palo Verde Units 1, 2, and 3 on March 29, 2001 (Reference 3).

Two other examples of plant-specific NRC approvals of the changes in TSTF-340-A are Joseph M. Farley Nuclear Plant, Units 1 and 2, on dated August 3, 2016 (Reference 4), and Vogtle Electric Generating Plant, Units 1 and 2, Amendments 180/161, dated June 9, 2016 (Reference 5). However, these approvals were part of adoption of several other changes to the specific unit's TSs.

TSTF-412 was approved for the Point Beach station on March 25, 2011 (Reference 6). Waterford 3 nuclear station adopted essentially the allowances of TSTF-340 and TSTF-412 in TS Amendment 173 dated October 4, 2001, although TSTF-412 was not yet generically approved for the industry (Reference 7).

4.3 No Significant Hazards Consideration Determination

Entergy Operations, Inc. (Entergy) has evaluated the proposed changes to the TS using the criteria in 10 CFR 50.92 and has determined that the proposed changes do not involve a significant hazards consideration.

Entergy proposes a change to the Arkansas Nuclear One, Unit 2 (ANO-2), Technical Specification (TS) 3.7.1.2, Emergency Feedwater System, to provide consistency with the requirements of NUREG 1432, Revision 4, Standard Technical Specifications for Combustion Engineering Plants," heretofore referred to as the STS. The changes provide clarity of operability requirements for the ANO-2 turbine-driven Emergency Feedwater (EFW) pump and

adopts Actions governing different EFW system configurations, including conditions when 1) one steam supply to the turbine-driven EFW pump is inoperable, 2) one steam supply to the turbine-driven EFW pump is inoperable coincident with inoperability of the motor-driven EFW pump, and 3) when both the turbine-driven and the motor-driven EFW pumps are inoperable simultaneously.

Basis for no significant hazards consideration determination: As required by 10 CFR 50.91(a), Entergy analysis of the issue of no significant hazards consideration is presented below:

1. Does the proposed change involve a significant increase in the probability or consequences of an accident previously evaluated?

   Response: No

   The proposed changes clarify the operability requirements of the EFW system and provide appropriate remedial actions to be performed respective to potential EFW configurations or out-of-service periods, consistent with the STS. The EFW system is not an initiator of any design basis accident or event and, therefore, the proposed changes do not increase the probability of any accident previously evaluated. The EFW system is used to respond to accidents previously evaluated. The proposed change affects only the actions taken when portions of the EFW system are unavailable and does not affect the design of the EFW system.

   The proposed changes do not adversely affect accident initiators or precursors nor alter the design assumptions, conditions, and configuration of the facility or the manner in which the plant is operated and maintained. The proposed changes do not adversely affect the ability of structures, systems, and components (SSCs) to perform their intended safety function to mitigate the consequences of an initiating event within the assumed acceptance limits. The proposed changes do not affect the source term, containment isolation, or radiological release assumptions used in evaluating the radiological consequences of any accident previously evaluated. Further, the proposed changes do not increase the types and amounts of radioactive effluent that may be released offsite, nor significantly increase individual or cumulative occupational/public radiation exposures.

   Therefore, this change does not involve a significant increase in the probability or consequences of an accident previously evaluated.

2. Does the proposed change create the possibility of a new or different kind of accident from any accident previously evaluated?

   Response: No

   The proposed changes do not result in a change in the manner in which the EFW system provides plant protection. The EFW system will continue to supply water to the Steam Generators (SGs) to remove decay heat and other residual heat by delivering at least the minimum required flow rate to the SGs. There are no design changes associated with the proposed changes. The changes to the related TS Actions do not change any existing accident scenarios, nor create any new or different accident scenarios.

The changes do not involve a physical alteration of the plant (i.e., no new or different type of equipment will be installed) or a change in the methods governing normal plant operation. In addition, the changes do not impose any new or different requirements or eliminate any existing requirements. The changes do not alter assumptions made in the safety analysis.

Therefore, this change does not create the possibility of a new or different kind of accident from an accident previously evaluated.

3. Does the proposed change involve a significant reduction in a margin of safety?

Response: No

The proposed changes do not alter the manner in which safety limits, limiting safety system settings, or limiting conditions for operation are determined. The safety analysis acceptance criteria are not impacted by these changes. The proposed changes will not result in continued plant operation in a configuration outside the design basis.

Therefore, this change does not involve a significant reduction in a margin of safety.

Based upon the reasoning presented above, Entergy concludes that the requested change involves no significant hazards consideration, as set forth in 10 CFR 50.92(c), "Issuance of Amendment."

4.4 Conclusions

In conclusion, based on the considerations discussed above, (1) there is reasonable assurance that the health and safety of the public will not be endangered by operation in the proposed manner, (2) such activities will be conducted in compliance with the Commission's regulations, and (3) the issuance of the amendment will not be inimical to the common defense and security or to the health and safety of the public.

5.0 ENVIRONMENTAL CONSIDERATION

The proposed change would change a requirement with respect to installation or use of a facility component located within the restricted area, as defined in 10 CFR Part 20, and would change an inspection or surveillance requirement. However, the proposed change does not involve (i) a significant hazards consideration, (ii) a significant change in the types or significant increase in the amounts of any effluents that may be released offsite, or (iii) a significant increase in individual or cumulative occupational radiation exposure. Accordingly, the proposed change meets the eligibility criterion for categorical exclusion set forth in 10 CFR 51.22(c)(9). Therefore, pursuant to 10 CFR 51.22(b), no environmental impact statement or environmental assessment need be prepared in connection with the proposed change.

6.0 REFERENCES

1. NRC letter to Technical Specifications Task Force dated October 30, .2015, *Traveler TSTF-412, "Provide Actions for One Steam Supply to Turbine Driven AFW/EFW Pump Inoperable" Provision for 24 Hours Completion for An Inoperable Motor-Driven Auxiliary Feedwater Pump Coincident with One Inoperable Steam Supply to the Steam-Driven Auxiliary Feedwater Pump*

2. NRC Safety Evaluation dated December 22, 2014, *Fort Calhoun Station, Unit No. 1 – Issuance of Amendment Re: Change to Technical Specification 2.5* (TAC No. MF3788) (ML14328A814)

3. NRC Safety Evaluation dated March 29, 2001, *Palo Verde Nuclear Generating Station, Units 1, 2, and 3 Issuance of Amendments on 7-Day Completion Time for Turbine-Driven Auxiliary Feedwater System* (TAC Nos. MB0709, MB0710, and MB0711) (ML010930242)

4. NRC Safety Evaluation dated August 3, 2016, *Joseph M. Farley Nuclear Plant, Units 1 and 2 - Issuance of Amendments Adopting 21 Previously NRC-Approved TSTF Travelers and One Request not associated with TSTF Travelers* (CAC Nos. MF5317 and MF5318) (ML15233A448)

5. NRC Safety Evaluation dated June 9, 2016, *Vogtle Electric Generating Plant, Units 1 and 2 - Issuance of Amendments Regarding Multiple Technical Specification Changes* (TAC Nos. MF4560 and MF4561) (ML15132A569)

6. NRC Safety Evaluation dated March 25, 2011, *Point Beach Nuclear Plant (PBNP), Units 1 and 2 – Issuance of License Amendments RE: Auxiliary Feedwater System Modification* (TAC Nos. ME1081 and ME1082) (ML110230016)

7. NRC Safety Evaluation dated October 4, 2001, *Waterford Steam Electric Station, Unit 3 – Issuance Of Amendment RE: Emergency Feedwater System* (TAC No. MB2010) (ML012840538)

8. Entergy letter dated July 21, 1997, *Technical Specification Change Request Concerning Emergency Feedwater Surveillance Testing* (2CAN079703)

Attachment 2 to

2CAN071701

Proposed Technical Specification Changes (Mark-Up)

EMERGENCY FEEDWATER (EFW) SYSTEM

LIMITING CONDITION FOR OPERATION

3.7.1.2 Two ~~emergency feedwater~~ EFW trains~~pumps and associated flow paths~~ shall be OPERABLE~~ with:~~

~~a. One motor driven pump capable of being powered from an OPERABLE emergency bus, and~~

~~b. One turbine driven pump capable of being powered from an OPERABLE steam supply system.~~

APPLICABILITY: MODES 1, 2, and 3

ACTIONS:[1]

NOTE 1: Specification 3.0.4.b is not applicable.

NOTE 2: Only applicable if MODE 2 has not been entered following refueling.

NOTE 3: Not applicable when the turbine-driven EFW train is inoperable solely due to one inoperable steam supply.

NOTE 4: LCO 3.0.3 and all other LCO ACTIONS requiring MODE changes are suspended until one EFW train is restored to OPERABLE status.

a. With the turbine-driven EFW train inoperable in MODE 3 following refueling[2], OR with the turbine-driven EFW train inoperable due to one inoperable steam supply, restore the turbine-driven EFW train to OPERABLE status within 7 days.

b. With one EFW~~emergency feedwater~~ train~~pump~~ inoperable for reasons other than ACTION a, restore the inoperable train~~pump~~ to OPERABLE status within 72 hours.

c. With the turbine-driven EFW train inoperable due to one inoperable steam supply AND the motor-driven EFW train inoperable, restore either the steam supply to the turbine-driven train OR the motor-driven EFW train to OPERABLE status within 24 hours.

d. With ACTION a, b, or c not met, ~~or~~ be in HOT SHUTDOWN within the next 12 hours.

e. With both EFW trains inoperable, immediately initiate action to restore one EFW train to an OPERABLE status.[3,4]

SRs 4.7.1.2.a and 4.7.1.2.b moved to next page

SURVEILLANCE REQUIREMENTS

4.7.1.2 Each EFW~~emergency feedwater~~ pump shall be demonstrated OPERABLE:

a At least once per 31 days by:

1. Verifying that each valve (manual, power operated or automatic) in the flow path that is not locked, sealed, or otherwise secured in position, is in its correct position.

b. In accordance with the INSERVICE TESTING PROGRAM by:

1. Verifying the developed head of each EFW pump at the flow test point is greater than or equal to the required developed head. This surveillance requirement is not required to be performed for the turbine~~-~~-driven EFW pump until 24 hours after exceeding 700 psia in the steam generators.

~~SURVEILLANCE REQUIREMENTS (Continued)~~

c At least once per 18 months by:

1. Verifying that each automatic valve in the flow path actuates to its correct position on actual or simulated MSIS and~~or~~ EFAS~~ test signals~~.

2. Verifying each EFW~~that the motor driven~~ pump starts automatically ~~up~~on ~~receipt of~~ an actual or simulated EFAS~~ test signal~~.

~~3. Verifying that the turbine driven pump steam supply MOV opens automatically upon receipt of an EFAS test signal.~~

d. By verifying proper alignment of the required EFW flow paths by verifying flow from the condensate storage tank to each steam generator. This SR is required to be verified prior to entering MODE 2 whenever plant has been in MODES 4, 5, 6, or defueled for > 30 days.

SR 4.7.1.2.a and 4.7.1.2.b moved from previous page

Attachment 3 to

2CAN071701

Revised Technical Specification Pages

EMERGENCY FEEDWATER (EFW) SYSTEM

LIMITING CONDITION FOR OPERATION

3.7.1.2 Two EFW trains shall be OPERABLE.

APPLICABILITY: MODES 1, 2, and 3

ACTIONS:[1]

NOTE 1: Specification 3.0.4.b is not applicable.

NOTE 2: Only applicable if MODE 2 has not been entered following refueling.

NOTE 3: Not applicable when the turbine-driven EFW train is inoperable solely due to one inoperable steam supply.

NOTE 4: LCO 3.0.3 and all other LCO ACTIONS requiring MODE changes are suspended until one EFW train is restored to OPERABLE status.

a. With the turbine-driven EFW train inoperable in MODE 3 following refueling[2], OR with the turbine-driven EFW train inoperable due to one inoperable steam supply, restore the turbine-driven EFW train to OPERABLE status within 7 days.

b. With one EFW train inoperable for reasons other than ACTION a, restore the inoperable train to OPERABLE status within 72 hours.

c. With the turbine-driven EFW train inoperable due to one inoperable steam supply AND the motor-driven EFW train inoperable, restore either the steam supply to the turbine-driven train OR the motor-driven EFW train to OPERABLE status within 24 hours.

d. With ACTION a, b, or c not met, be in HOT SHUTDOWN within the next 12 hours.

e. With both EFW trains inoperable, immediately initiate action to restore one EFW train to an OPERABLE status.[3,4]

SURVEILLANCE REQUIREMENTS

4.7.1.2 Each EFW pump shall be demonstrated OPERABLE:

a At least once per 31 days by:

1. Verifying that each valve (manual, power operated or automatic) in the flow path that is not locked, sealed, or otherwise secured in position, is in its correct position.

b. In accordance with the INSERVICE TESTING PROGRAM by:

1. Verifying the developed head of each EFW pump at the flow test point is greater than or equal to the required developed head. This surveillance requirement is not required to be performed for the turbine-driven EFW pump until 24 hours after exceeding 700 psia in the steam generators.

c At least once per 18 months by:

1. Verifying that each automatic valve in the flow path actuates to its correct position on actual or simulated MSIS and EFAS.

2. Verifying each EFW pump starts automatically on an actual or simulated EFAS.

d. By verifying proper alignment of the required EFW flow paths by verifying flow from the condensate storage tank to each steam generator. This SR is required to be verified prior to entering MODE 2 whenever plant has been in MODES 4, 5, 6, or defueled for > 30 days.

Attachment 4 to

2CAN071701

Proposed Technical Specification Bases Changes (Mark-Up)
For Information Only

3/4.7.1.2 EMERGENCY FEEDWATER SYSTEM

The OPERABILITY of the emergency feedwater (EFW) system ensures that the Reactor Coolant System can be cooled down to Shutdown Cooling (SDC) entry conditions from normal operating conditions in the event of a total loss of off-site power.

The EFW system is designed to supply sufficient water to the steam generator(s) (SGs) to remove decay heat with ~~steam generator~~SG pressure at the setpoint of the Main Steam Safety Valves (MSSVs). Subsequently, the EFW system supplies sufficient water to cool the unit to SDC entry conditions, and steam is released through the Atmospheric Dump Valves (ADVs).

The EFW System is considered to be OPERABLE when the motor-driven EFW pump is OPERABLE and the turbine-driven EFW pump is OPERABLE with redundant steam supplies from each of the two main steam lines upstream of the Main Steam Isolation Valves (MSIVs). The pumps must be capable of supplying required EFW to either SG.

ACTIONs

A Note prohibits the application of LCO 3.0.4.b to an inoperable EFW train. There is an increased risk associated with entering a MODE or other specified condition in the Applicability with an EFW train inoperable and the provisions of LCO 3.0.4.b, which allow entry into a MODE or other specified condition in the Applicability with the LCO not met after performance of a risk assessment addressing inoperable systems and components, should not be applied in this circumstance.

ACTION a

If the turbine-driven EFW pump is inoperable due to one inoperable steam supply, or if a turbine driven-pump is inoperable for any reason while in MODE 3 immediately following refueling, action must be taken to restore the inoperable equipment to an OPERABLE status within 7 days. The 7-day AOT is reasonable based on the following reasons:

a. For the inoperability of the turbine-driven EFW pump due to one inoperable steam supply, the 7-day AOT is reasonable since there is a redundant steam supply line for the turbine-driven pump and the turbine-driven train is still capable of performing its specified function for most postulated events.

b. For the inoperability of a turbine driven EFW pump while in MODE 3 immediately subsequent to a refueling outage, the 7-day AOT is reasonable due to the minimal decay heat levels in this situation.

c. For both the inoperability of the turbine-driven pump due to one inoperable steam supply and an inoperable turbine driven AFW pump while in MODE 3 immediately following a refueling outage, the 7-day AOT is reasonable due to the availability of redundant OPERABLE motor-driven EFW pump; and due to the low probability of an event requiring the use of the turbine-driven EFW pump.

3/4.7.1.2 EMERGENCY FEEDWATER SYSTEM (continued)

ACTION a (continued)

ACTION a is modified by a Note which limits the applicability of the ACTION for an inoperable turbine-driven EFW pump in MODE 3 to when the unit has not entered MODE 2 following refueling. ACTION a allows one EFW train to be inoperable for 7 days vice the 72-hour AOT of ACTION b. This longer AOT is based on the reduced decay heat following refueling and prior to the reactor being critical.

ACTION b

With one of the required EFW trains (pump or flow path) inoperable in MODE 1, 2, or 3 [for reasons other than ACTION a, action must be taken to restore the inoperable train to an OPERABLE status within 72 hours. This ACTION includes the loss of two steam supply lines to the turbine-driven EFW pump. The 72-hour AOT is reasonable based on the redundant capabilities afforded by the EFW System, the time needed for repairs, and the low probability of a Design Basis Accident (DBA) event occurring during this period. The redundant EFW pump and flow path remains to supply feedwater to the SGs.

ACTION c

With the motor-driven EFW train inoperable and the turbine-driven EFW train inoperable due to one inoperable steam supply, action must be taken to restore the affected equipment to OPERABLE status within 24 hours. Assuming no single active failures when in this condition, the accident (a Main Feedwater Line Break (MFLB) or Main Steam Line Break (MSLB)) could result in the loss of the remaining steam supply to the turbine-driven EFW pump due to the faulted SG. In this condition, the EFW system may no longer be able to meet the required flow to the SGs assumed in the safety analysis. The 24-hour AOT is reasonable based on the remaining OPERABLE steam supply to the turbine-driven EFW pump and the low probability of an event occurring that would require the inoperable steam supply to be available for the turbine-driven EFW pump.

ACTION d

When ACTIONs a, b, or c cannot be completed within the AOT, the unit must be placed in a MODE in which the LCO does not apply. To achieve this status, the unit must be placed in at least MODE 4 within12 hours. The AOT is reasonable based on operating experience to reach the required unit conditions from full power conditions in an orderly manner and without challenging unit systems.

ACTION e

ACTION e is modified by a Note to clarify that it is not applicable when the turbine-driven EFW train is inoperable solely due to an inoperable steam supply. This Note is necessary to differentiate between the inoperable configurations described in ACTION c as compared to the configuration intended to be encompassed by ACTION e. With one steam supply available to the turbine-driven EFW pump, and assuming neither EFW train is restored to an OPERABLE status within 24 hours, the EFW system can still support a plant shutdown as required by ACTION d.

3/4.7.1.2 EMERGENCY FEEDWATER SYSTEM (continued)

ACTION e (continued)

ACTION e is intended to address configurations where insufficient EFW flow is available to support necessary decay removal following a plant shutdown and, therefore, maintains the plant in a stable steady-state condition until sufficient EFW capacity is restored. The ACTION e Note aids in identifying which condition (ACTION c or ACTION e) is applicable for the current plant configuration

ACTION e is also modified by a Note indicating that all required MODE changes are suspended until one EFW train is restored to OPERABLE status. With both EFW trains inoperable in MODE 1, 2, or 3, the unit is in a seriously degraded condition with no safety-related means for conducting a cooldown, and only limited means for conducting a cooldown with non-safety grade equipment. In such a condition, the unit should not be perturbed by any action, including a power change, that might result in a trip. The seriousness of this condition requires that action be started immediately to restore one EFW train to OPERABLE status. LCO 3.0.3 is not applicable, as it could force the unit into a less safe condition.

SURVEILLANCE REQUIREMENTS

SR 4.7.1.2.a.1 verifies the correct alignment for manual, power operated, and automatic valves in the EFW water and steam supply flow paths to provide assurance that the proper flow paths exist for EFW operation. This SR does not apply to valves that are locked, sealed, or otherwise secured in position, since these valves are verified to be in the correct position prior to locking, sealing, or securing. This SR also does not apply to valves that cannot be inadvertently misaligned, such as check valves. This SR does not require any testing or valve manipulations; rather, it involves verification that those valves capable of potentially being mispositioned are in the correct position. The 31-day Frequency is based on engineering judgment, is consistent with the procedural controls governing valve operation, and ensures correct valve positions.

SR 4.7.1.2.b.1 verifies that each EFW pump's developed head at the flow test point is greater than or equal to this required developed head. This test ensures that EFW pump performance has not degraded during the cycle. Flow and differential head are normal tests of pump performance required by the ASME Operation and Maintenance (OM) Code. Because it is undesirable to introduce cold EFW into the SG~~steam generator~~s while they are operating, this testing is performed on recirculation flow. This test confirms one point that is indicative of pump overall performance. Such inservice tests confirm component OPERABILITY, trend performance, and detect incipient failures by indicating abnormal performance. Performance of inservice testing in accordance with the ASME OM Code satisfies this requirement. The SR for the turbine~~-~~-driven EFW pump is allowed to be deferred for up to 24 hours after exceeding 700 psia in the SG~~steam generator~~s. This allowance will ensure the test is completed within a reasonable period of time after establishing sufficient steam pressure to perform the test.

SR 4.7.1.2.c ensures that EFW can be delivered to the appropriate SG~~steam generator~~, in the event of any accident or transient that generates an Emergency Feedwater Actuation Signal (EFAS)~~ signal~~, or as applicable, a Main Steam Isolation Signal (MSIS). This is assured by demonstrating that each automatic valve in the flow path actuates to its correct position on an actual or simulated actuation signal.

SURVEILLANCE REQUIREMENTS (continued)

SR 4.7.1.2.c.1 is not required for valves that are locked, sealed, or otherwise secured in the required position under administrative controls. The 18-month frequency is based on the need to perform the SRs under the conditions that apply during a unit outage and the potential for an unplanned transient if the SRs were performed with the reactor at power. The 18-month Frequency is acceptable based on the design reliability and operating experience of the equipment.

SR 4.7.1.2.d ensures that the EFW system is properly aligned by verifying the flow path from the condensate storage tank (CST) to each SG~~steam generator~~ prior to entering MODE 2 operation, after more than 30 days below MODE 3. OPERABILITY of the EFW flow paths must be verified before sufficient core heat is generated that would require the operation of the EFW system during a subsequent shutdown. The Frequency is reasonable, based on engineering judgment, and other administrative controls to ensure that flow paths remain OPERABLE. To further ensure EFW system alignment, the OPERABILITY of the flow paths is verified following extended outages to determine that no misalignment of valves has occurred. This SR ensures that the flow path from the CST to the SG~~steam generator~~s is properly aligned.

3/4.7.1.3 CONDENSATE STORAGE TANK

The design of the ANO-2 condensate storage system includes two non-seismic condensate storage tanks (2T41A and 2T41B). In addition, ANO-2 is capable of being aligned to the seismically qualified condensate storage tank (T41B). Each of these tanks is designed to provide condensate-grade water to the suction of the emergency feedwater system (EFW) pumps. The service water system (SWS) provides the assured source of water for EFW.

The allowance to align to the non-safety, non-seismically-qualified condensate storage tanks (2T41A and 2T41B) has been retained for operational flexibility. The minimum volume for 2T41A/B is consistent with the original technical specification (TS) requirements. In the event of a failure of one of these tanks in conjunction with an EFW~~emergency feedwater~~ actuation, EFW pump suction will be automatically re-aligned to draw from the SWS. Should the EFW be aligned to the Unit 1 tank (T41B), the automatic suction re-alignment to SWS may be disabled, provided remote-manual alignment capability is maintained (reference 0CAN030101). Therefore, the OPERABILITY requirements for the SWS~~service water system~~ - EFW~~emergency feedwater~~ system isolation valves listed in SR 4.7.1.3.2 do not include the automatic re-alignment to SWS capability when EFW is aligned to T41B.

TS 3.7.1.3 and corresponding Bases describe the required condensate storage tank (CST) volumes and conditions where automatic realignment to the SWS suction source is required. TS 3.7.1.3 does not describe the operability requirements for the SWS or the EFW system. Therefore, an inoperable SWS suction supply to an EFW pump constitutes inoperability of the associated EFW train and TS 3.7.1.2 is applicable in such cases.

The T41B CST is seismically qualified and a portion of the tank is protected from tornado missiles. The protected volume of water in the tank can provide a source of EFW for both units for at least 30 minutes. Thirty minutes is adequate for the operators to manually switch the EFW suction alignment to the SWS, if required.