Rev. 1
September 18, 1995

Dresden Unit 2
Integrated Evaluation Report of Core Spray Flaws

September 18, 1995

9509270186 950925
PDR ADOCK 05000237
P PDR

Dresden Unit 2
Core Spray Flaws Integrated Evaluation Report

REPORT TABLE OF CONTENTS

		Page
1.0	EXECUTIVE SUMMARY	5
2.0	BACKGROUND INFORMATION AND INTRODUCTION	6
3.0	FLAW DESCRIPTION	8
4.0	MATERIALS EVALUATION	13
5.0	FLAW EVALUATION	14
6.0	CORE SPRAY SYSTEM FUNCTIONAL ASSESSMENT	21
7.0	BOUNDING FAILURE ASSESSMENT	23
8.0	LOOSE PARTS EVALUATION	28
9.0	CONCLUSIONS	31
10.0	REFERENCES	34

LIST OF TABLES

Table		Page
3.1	Summary of Flaw Length	12
5.1	Flaw Evaluation Stress Values (psi)	15
5.2	Flaw Evaluation Results	17

LIST OF FIGURES

Figure		Page
2.1	Core Spray Piping Inside the RPV Annulus	7
3.1	Core Spray A-Loop 290° Upper Sparger Inlet Thermal Sleeve	9
3.2	Core Spray B-Loop 260° Lower Sparger Inlet Thermal Sleeve and Elbow	10
3.3	Ultrasonic Testing Examination Results	11
5.1	Cross Section of Flawed Pipe	18

1.0 Executive Summary

Cracks were observed at three locations on the core spray downcomers during the D2R14 planned vessel visual inspection covering 100% of the internal core spray piping header and downcomer welds. This integrated evaluation report provides a summary of the design criteria, design inputs and results of the conservative evaluations performed to assess the extent, causes and impact of the cracking on safety and plant operation. The cracks are typical for IGSCC in austenitic stainless steel, which can be controlled using the hydrogen water chemistry system presently installed in Unit 2. ComEd has evaluated the maximum impact of leakage on the peak cladding temperature during the DBA-LOCA in combination with single failure of the LPCI injection valve. This evaluation found that the peak cladding temperature during DBA-LOCA would remain below 2200° F. In addition, beyond-design-basis bounding assessments using both the deterministic and probabilistic approach were made. These bounding assessments found that, even with an assumed 360° failure of any one of the four core spray downcomers, adequate core cooling would be maintained when subjected to all design basis events, including LPCI system failure concurrent with LOCA. The worst case scenarios (reactor recirculation line failure combined with LPCI system failure or reactor recirculation failure combined with LPCI system failure and a SSE) present an insignificant risk since their probabilities are much less than 1×10^{-6}/year. Failure of a core spray downcomer could potentially result in a loose part and debris within the vessel. ComEd has evaluated the impact of the loose parts and debris, and since the largest pieces would be confined to the annulus region, no safety concerns were identified. ComEd will continue to monitor the condition of the degraded core spray welds by reinspection in the next scheduled refuelling outage, D2R15, currently scheduled for Spring, 1997.

2.0 BACKGROUND INFORMATION AND INTRODUCTION

The portion of the core spray line addressed by this report is located in the reactor pressure vessel (RPV) annulus of Dresden Unit 2. The RPV annulus portion of the core spray lines consists of two symmetrical loops with RPV penetrations at the 5° and 185° azimuths. These two loops feed the two upper and two lower core spray spargers through four core shroud penetrations. The RPV annulus portion of the core spray system is illustrated in Figure 1.1.

On July 11, 1995, Dresden Site Engineering initiated the D2R14 planned in-vessel visual inspection (IVVI). The inspection was planned as a thorough rebaselining inspection of the condition of the reactor vessel internals, using the enhanced visual inspection techniques similar to the techniques first used at Dresden Station during the Unit 3 1994 refueling outage and now adopted as the industry standard for reactor vessel core shroud inspections. On July 12, 1995, cracking was detected by the Dresden Site Engineering inspectors.

Crack like indications were observed at three locations on the core spray downcomers. One each in the "B" loop lower sparger inlet elbow and thermal sleeve collar, and one in the "A" loop upper sparger thermal sleeve collar. The elbow is made of stainless steel and is 6 inches in diameter. The affected piping is located in the reactor annulus between the reactor vessel wall and the core shroud wall. The elbow is not part of the reactor coolant pressure boundary nor is it part of the core shroud. The thermal sleeve collar is attached to the shroud on one side and to the 6 inch diameter pipe on the other side. The thermal sleeve collar has the function of providing a leakage seal between the pipe and the annulus as shown in Figures 2.1 and 2.2. All three of the indications are circumferential.

This report provides an integrated flaw evaluation and safety assessment of the core spray cracking identified during the D2R14 In-Vessel Visual Inspections (IVVI). A detailed description of the inspection methods and analyses performed is provided in Reference 1. Section 3 of this report provides a brief summary of the method and extent of the examinations performed as well as the definition of the indications identified. Section 4 provides an overview of the materials evaluation, including a discussion on the causes of the cracking. Section 5 provides a summary of the flaw and leakage flow evaluations. Section 6 provides a description of the core spray system functional assessment. A bounding failure assessment and loose parts analysis are provided in Sections 7 and 8, respectively. The conclusion is provided in Section 9, while the references are presented in Section 10.

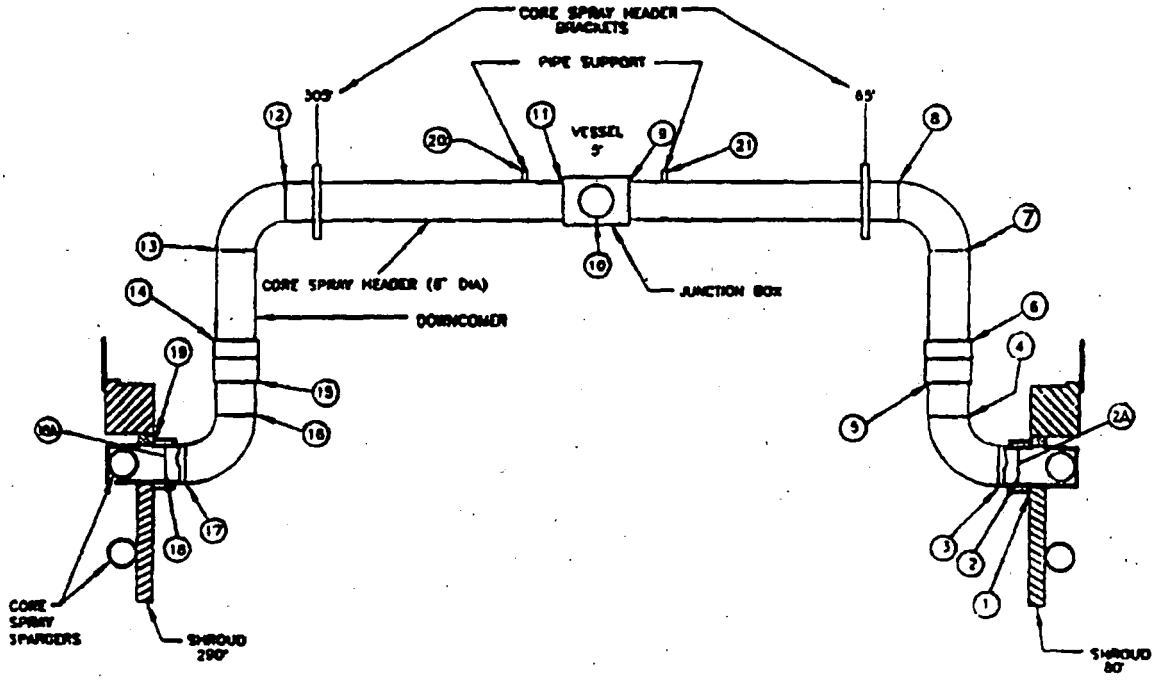

Figure 2.1 Core Spray Piping in the RPV Annulus

3.0 FLAW DESCRIPTION

An enhanced visual inspection (0.5 mil wire resolution) was performed during the D2R14 refuel outage, covering 100 percent of the internal core spray piping header and downcomer welds. Crack like indications were identified in three locations. Ultrasonic (UT) examinations were performed to characterize the length of the OD connected flaws which were first detected with an enhanced visual inspection and to detect any ID connected flaws which may be less than through wall in depth. The ultrasonic technique used for the examination of the visually detected flaws in the core spray piping was developed by GE and was qualified using mockups. The UT technique and qualification process was independently reviewed by EPRI (Reference 4) and ComEd and is described in Section 2.2 of Reference 1. Figures 3.1 and 3.2 illustrate the configuration of the core sprayer inlet thermal sleeve collar and elbow. This technique proved to be useful in verifying the endpoints of the visually-detected flaws, whether the flaw extremities are connected to the inside or the outside surface. However, it was not practical to measure crack depth or to distinguish inside-surface from outside-surface cracking because of the thin wall.

A description of the examination details and results is provided in Section 2 of Reference 1. Figure 3.3 provides a summary of the bounding UT examination results.

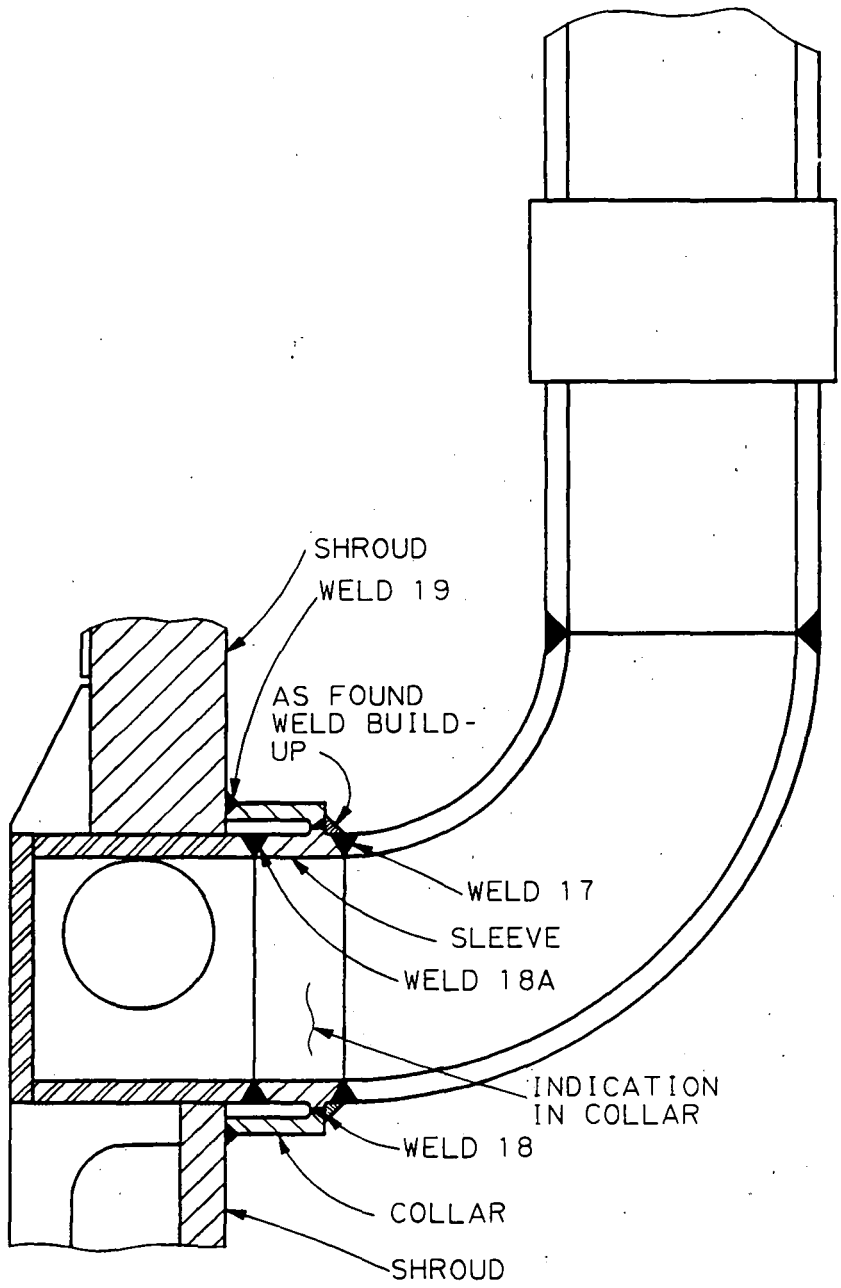

Figure 3.1 Core Spray A-Loop 290° Upper Sparger Inlet Thermal Sleeve

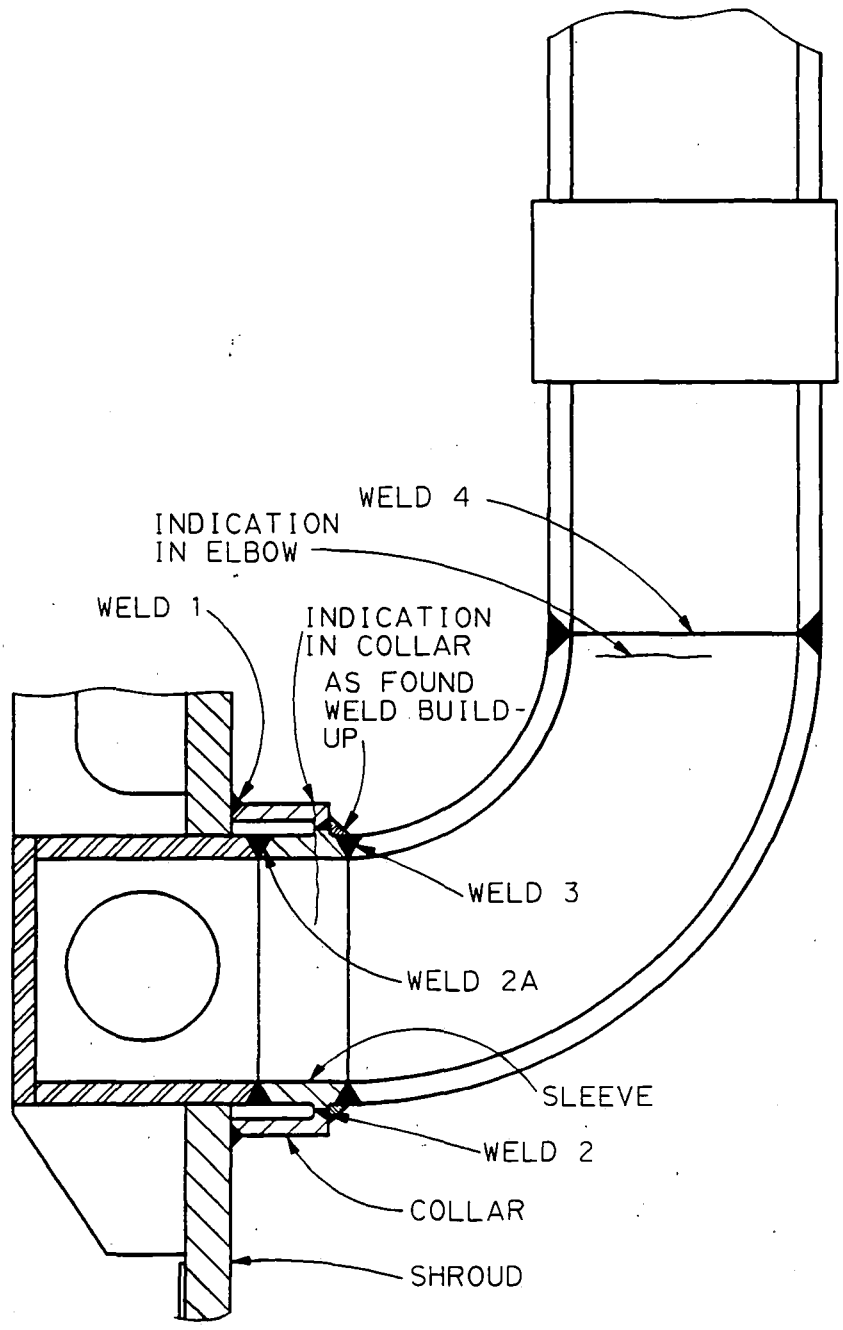

Figure 3.2 Core Spray B-Loop 260° Lower Sparger Inlet Thermal Sleeve & Elbow

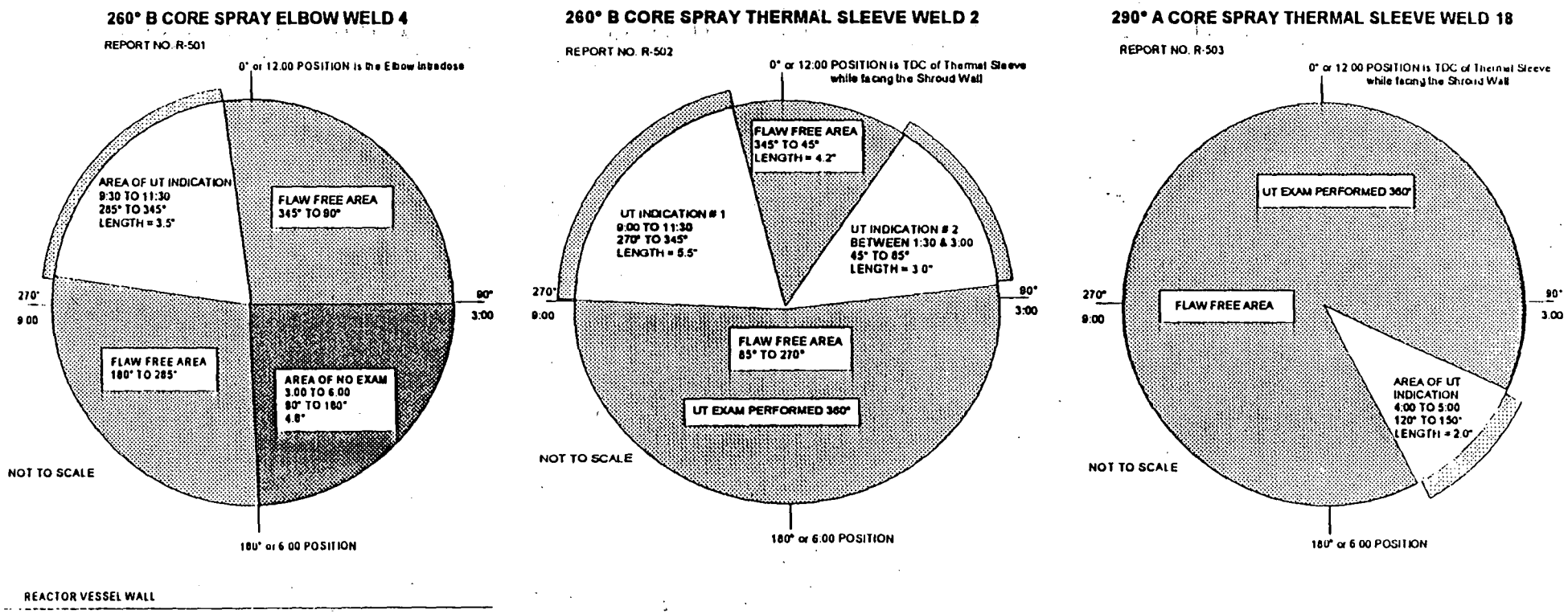

Figure 3.3 Ultrasonic Testing Examination Results

3.1 Crack Growth Length

The flaw lengths as determined by the VT and UT examinations were increased by a crack growth length to establish the evaluated flaw length (EFL). A crack growth length for an evaluation period of a 21 month hot operating cycle with a 90% availability factor was added to both ends of the flaw. A summary of the flaw lengths evaluated is provided in Table 3.1.

Table 3.1 Summary of Flaw Lengths

Flaw Location	Measured Flaw Length (Inches)[1]	Crack Growth Rate (Inches/ Hour)[2]	Crack Growth Length (Inches)[3]	Evaluated Flaw Length (Inches)[4]
A-Loop 290° Thermal Sleeve	2.00"	5.00 E-5	0.68"	3.36"
B-Loop 260° Thermal Sleeve	3.00" 5.50"	5.00 E-5 5.00 E-5	0.68" 0.68"	4.36" 6.86"
B-Loop 260° Inlet Elbow	3.50"	5.00 E-5	0.68"	4.86"

Notes:

1. Measured flaw lengths are the upper bound results obtained from the VT and UT examinations.

2. 5.00 E-5 Inches/Hour represents an upper bound limit for IGSCC crack growth in ductile material (Reference 13).

3. Crack growth is based on 13,608 hours of operation (21 x 30 x 24 x 0.9 = 13,608 hours).

4. Evaluated Flaw Length (EFL) = Measured Length + 2(CGL)

4.0 MATERIALS EVALUATION

A detailed review of the video tapes of all three crack locations revealed surface crack characteristics that were both jagged and branched. All of the cracks observed were initiated in the austenitic stainless steel base material heat affected zones (HAZ). Consequently, the appearance and location of the cracking is consistent with Intergranular Stress Corrosion Cracking (IGSCC). This particular degradation mechanism is well documented for stainless steel components exposed to the high temperature reactor water of BWRs. Several other BWRs, including Dresden 3 and Quad Cities 1 have reported core spray piping cracks which were identified as IGSCC.

A detailed evaluation of the fabrication process, the crack growth rates and the material behavior is provided in Section 3 of Reference 1. The conclusion of this evaluation was that the cracking observed in the core spray system is the result of IGSCC in austenitic stainless steel. Therefore, the bounding crack growth rate of 5.00×10^{-5} inches/hours (Reference 13) was used for these analyses. Additionally, the material ductility and toughness is not affected because the neutron fluence in the area of the core spray piping is less than 6×10^{18} n/cm^2.

5.0 FLAW EVALUATION

A detailed description of the methodology and details of the core spray line flaw assessments is provided in Section 7 of Reference 1. The loading and stress analysis results as defined in Sections 4, 5 and 6 of Reference 1 serve as the primary inputs for these flaws evaluations. The flaw evaluations were performed using the ASME Section XI, Appendix C, limit load method for the flaws as characterized in Section 3. Provided below is a summary of the evaluations performed and the analysis results.

5.1 Flaw Evaluation Methods

These flaws are evaluated using the limit load methodology of ASME B&PV Code Section XI, Appendix C, Reference 6. As defined in ASME Section XI, Appendix C, the limit for plastic collapse is defined as $3S_m$ at the operating temperature. For these evaluations, the operating temperature is 550°F and the corresponding S_m is 16950.0 psi (Reference 8).

For conservatism, these evaluations assume the flaws to be through wall. As previously defined in Section 3, the evaluation period has been defined as a 21 month operating period with 90% availability. The crack growth during this period is based on the conservative IGSCC rate of 5×10^{-5} in/hr as defined in Section 4. The normal operating loads on the core spray line were determined to be very low, consequently, fatigue crack growth will not contribute significantly to crack extension and is not considered in the projected flaw length.

5.2 Flaw Evaluation Stress Inputs

The loads used in these evaluations were obtained from the piping model of the core spray lines including the detailed finite element model of the thermal sleeve shroud penetration assembly (see Reference 1). These models generated the axial forces and bending moments acting on these flaws for the following loads:

- Weight
- Thermal
- Seismic
- Operating Drag
- LOCA

The design basis load combinations were evaluated and the worst case normal/upset and emergency/faulted condition load combinations were used for these evaluations. Additional beyond design basis, faulted load combinations were also evaluated. The simultaneous occurrence of a seismic SSE event with the Recirculation Line Break LOCA was determined to be the bounding beyond design basis load combination. Table 5.1 presents the membrane and bending stress values used for the flaw evaluations.

Table 5.1 Flaw Evaluation Stress Values (psi)

Flow Location	Design Basis (1)		Beyond Design Basis	
	σ_m	σ_b	σ_m	σ_b
Loop B 260° Elbow	25	713	25	954
Loop B 260° Collar	18	394	18	502
Loop A 290° Collar	17	392	17	475

(1) Includes the bounding load combination for normal/upset as well as emergency/ faulted conditions.

5.3 Flaw Limit Load Evaluations and Results

The allowable bending stress, P_B, for the limit load evaluation was calculated using equation 5-1.

$$P_B = 6\,\frac{S_m}{\pi}\,\{2\,\sin(\beta) - \frac{a}{t_n}\,\sin(\theta)\} \qquad (Eq.5\text{-}1)$$

$$with \qquad \beta = \frac{1}{2}\,\{\pi - \frac{a}{t_n}\,\theta - \pi\,\frac{P_m}{3S_m}\}$$

$$and \qquad \theta + \beta \leq \pi$$

Where θ is defined as the half angle as presented in Figure 5.1, and P_M is the membrane stress acting on the flaw. Because the flaws are assumed to be through-wall, the a/t_n ratio is equal to 1.

For these evaluations, the applied bending stress, P_{AB}, must be less than the allowable bending stress. The applied bending stress is calculated using equation 5-2.

$$P_{AB} = SF\,(P_m + P_b) - P_m \qquad (Eq.\ 5\text{-}2)$$

The code safety factor (SF) is 2.77 for normal/upset and 1.39 for emergency/faulted conditions. P_M and P_B are the applied membrane and bending stress, respectively.

The flaw evaluations were performed to determine the load margin for the end of evaluation period flaw size reported in Section 3. The load margin is defined as the ratio of the maximum permitted stress P_B, to the applied stress P_{AB}. This ratio represents the margin with respect to the applied load above the ASME Section XI safety factors. In addition to the load margins, the remaining months of operation were determined by calculating maximum flaw lengths which would meet the code required safety factors. The months of operation required to reach this maximum flaw length were calculated using the bounding crack growth rate of 5×10^{-5} inch/hour. The results of these calculations are presented in Table 5.2.

Table 5.2 Flaw Evaluation Results

Flaw Location	Load Margin Factor at end of Evaluation Period[1]		Months of Operation to Reach Critical Flaw Length	
	Design Basis	Beyond Design Basis	Design Basis	Beyond Design Basis
Loop B 260° Elbow	38	28	181	175
Loop B 260° Collar	41	33	127	123
Loop A 290° Collar	90	75	262	259

(1) This is the margin on load above and beyond the ASME Code Safety Factors of 2.77 for Normal/Upset conditions and 1.39 for Emergency/Faulted Conditions

5.4 Flaw Evaluation Conclusions

Based on the results presented in Table 5.2, the minimum design basis load margin for the end of evaluation period flaw size is 38 and would require 181 months of operation to reach a critical flaw size. For the additional faulted condition load combination of RRLB LOCA plus an SSE, which is beyond the design basis of the Dresden Station, the minimum load margin is 28 and would require 175 months of operation to reach a critical flaw size. These results demonstrate that the flaws, projected to grow at a conservative IGSCC rate of $5x\ 10^{-5}$ in/hr for 13,608 hours, will remain structurally stable when subjected to design basis accident conditions. These results also demonstrate that reactor operation for more than 127 months can occur before the flaws are predicted to reach a critical length.

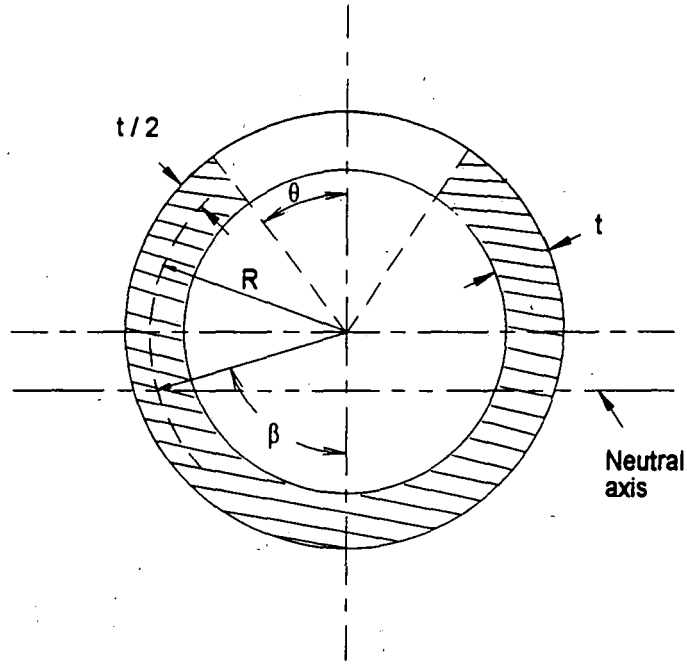

Figure 5.1 Cross Section of Flawed Pipe

5.5 LEAKAGE FLOW EVALUATIONS

This leakage flow evaluation determines the rate that water is lost from the elbow flaw in the lower sparger, loop B, during core spray injection. This evaluation does not evaluate leakage from the two thermal sleeve collar flaws because these are not part of the core spray pressure boundary. The core spray system leakage is calculated for elbow flaw lengths at the end of the evaluation period, as reported in Section 3, and at the end of life. A detailed description of the methodology and analysis techniques is provided in Section 8 of Reference 1.

5.5.1 Leakage Calculation Bounding Condition

During the core spray injection mode, the elbow flaw is subjected to the combined flow induced loads and differential thermal expansion loads. At approximately 60 seconds after a DBA LOCA, the core spray maximum differential pressure is 47 psid at a flow of 4600 gpm. As the reactor vessel pressure continues to reduce to 0 psig, the maximum differential line pressure would reach 64 psid at the core spray pump runout flow rate of 5350 gpm (which will occur at a time much later than the PCT which occurs at 169 seconds). The leakage flow rate was calculated for both the 47 psid and 64 psid line pressure conditions. The thermal load acting during the injection mode is conservatively based the core shroud and reactor vessel being hot while the core spray piping is cold, as described in Reference 1. This thermal loading is applied to the piping model which includes the flexibility of a 60° flaw which is the current size of the flaw without considering IGSCC crack growth. This produces conservative membrane and bending stresses which will reduce as the flaw grows.

5.5.2 Calculated Leakage

The leakage was calculated the PICEP program (Reference 14) which uses elastic plastic fracture mechanics to calculate the crack opening area. The leakage rate for the end of evaluation flaw size is 1.15 gpm, and for the end of life flaw size is 70.22 gpm under a system differential pressure of 47 psid. The leak rate for the end of evaluation flaw size is 1.38 gpm and for the end of life flaw size is 82.53 gpm under a system differential pressure of 64 psid. The end of life flow rates calculated here

are based the conservative thermal stresses generated from a more rigid model. Since the end of life flaw length is significantly larger than the 60° flaw used in the piping model, the flexibility of the model could be increased reducing the piping membrane and bending stresses and the corresponding leakage rates. The results of this leakage evaluation are compared to the system capacity in Section 6.0 of this report.

6.0 CORE SPRAY SYSTEM FUNCTIONAL ASSESSMENT

A detailed description of the core spray system and safety functions is provided in Section 9 of Reference 1. This section provides a summary review of the impact of the leakage flow rates as defined in Section 5 of this report.

6.1 Leakage Flow Evaluation

The bounding case for core spray is the DBA-LOCA, consisting of a reactor recirculation suction line break in combination with a single failure of the LPCI injection valve. This requires core spray to cool and reflood the core without assistance from LPCI.

The critical DBA-LOCA leakage is based on the maximum core spray flow of 4600 gpm and is 1 gpm through the elbow flaw. This is based on a flaw length developed after 21 months of operation at 90% availability with crack opening based on the combined design basis loads during injection. A bounding leakage of 70 gpm was determined based on the end of life flaw size. The flaws in the two collars are not part of the core spray system pressure boundary, are located above 2/3 core height and thus do not factor into the core spray system leakage evaluation.

During the blowdown phase of the DBA-LOCA, any core spray flow due to leakage in the annulus piping will be lost through the break. This water loss can be directly subtracted from the core spray flow assumed in the current DBA-LOCA calculations. This would cause a decrease in liquid flow to the lower plenum during the reflood phase of the DBA-LOCA and a subsequent increase in the time required to quench the "hot node". A preliminary estimate of the PCT increase is 36° F for a core spray leakage of 300 gpm. Linear interpolation can be used to estimate the change in PCT for leakage rates less than 300 gpm. Thus, the 1 gpm leakage will result in a negligible increase in the PCT for design basis conditions. Assuming the maximum end of life flaw size with a leakage of 70 gpm, the PCT increase will be approximately 8° F.

The current DBA-LOCA calculation, which is based on 8x8 fuel, indicates the PCT is 2045° F. The actual installed fuel is Seimens 9x9. Preliminary calculations indicate that for 9x9 fuel, the PCT is less than 1950° F for a postulated leakage rate of 70 gpm.

Based on this evaluation, the postulated leakage is not significant since the PCT would remain below 2200° F for the Seimens 9x9 fuel which is presently installed. Leakage resulting from the elbow flaw would only have an impact on the PCT for the postulated bounding case of a recirculation line break with concurrent loss of the LPCI system. Without the loss of LPCI, there would be no impact on the PCT.

7.0 BOUNDING FAILURE ASSESSMENT

Based on the results of the flaw evaluation in conjunction with the visual and UT inspections, the potential of developing a 360° circumferential failure in the downcomer elbow containing the flaw is not credible. This bounding beyond-design-basis failure assessment was performed as a means of assessing design margin. This assessment utilizes both a deterministic and probabilistic approach. The bounding failure postulates a 360° circumferential failure in any one of the four core spray downcomers that feed the spargers located inside the shroud. There are two such downcomers per core spray subsystem. Section 7.1 discusses the details of the deterministic assessment and Section 7.2 discusses the probabilistic assessment.

7.1 Deterministic Assessment

The deterministic investigation consists of an evaluation of three scenarios, each concurrent with the postulated 360° failure of any one of the four core spray downcomers. The three scenarios evaluated are:

- The DBA-LOCA of the instantaneous failure of a coolant or reactor recirculation pipe,
- Safe Shutdown Earthquake (SSE),
- The DBA-LOCA with the single failure of the LPCI injection valve.

The evaluation consists of postulating each scenario and demonstrating that, for each scenario adequate core cooling is provided.

7.1.1 Postulated Failure with DBA-LOCA

The DBA-LOCA is the instantaneous mechanical failure of a pipe equal in size to the largest coolant/recirculation system pipe. The bounding DBA-LOCA for demand on the core spray system is a reactor recirculation suction line break. Adequate core cooling can be provided even if one core spray loop is disabled due to failure of a core spray downcomer elbow in conjunction with the DBA-LOCA, since one core spray loop and one LPCI loop will remain available and can provide the required core cooling.

7.1.2 Postulated Failure with a SSE Event

The SSE is the earthquake which produces the maximum vibratory ground motion for which certain structures systems and components are designed to remain functional. The reactor vessel pressure boundary would be maintained during and after a SSE event. Should core spray be required, it would only be required to re-flood the vessel and not spray on top of the core. Thus, the postulated failure of the core spray downcomer elbow would only affect flow to the top of the core and the reactor coolant pressure boundary provides for capability of both core spray loops to reflood the core to assure adequate core cooling.

7.1.3 Postulated Failure with DBA-LOCA and LPCI Single Failure

This scenario combines the same DBA-LOCA discussed in Section 7.1.1 with the single failure of the LPCI injection valve. The original design basis for Dresden for a DBA-LOCA is that one core spray loop was sufficient to cool the core. Due to changes in 10CFR50.46 and Appendix K of 10CFR50 in the mid 1970's, the current design basis requires at least one core spray loop and one LPCI loop or two core spray loops to be operational to cool the core following a DBA-LOCA.

General Electric (GE) issued a Licensing Topical Report (Reference 11) in December 1988. This report was developed to identify and evaluate changes to Technical Specifications associated with Emergency Core Cooling systems (ECCS). This report states that any one low pressure ECCS pump or loop with at least 4600 gpm capacity and the operation of at least two Safety Relief Valves (SRVs) is sufficient to provide adequate core cooling for a BWR 3/4 plant so that the parameters and/or criteria of 10CFR50.46 and Appendix K of 10CFR50 are met. The results of this report are based on GE's Best Estimate LOCA model which was previously reviewed by the NRC.

This results of this Licensing Topical Report (Reference 11) apply to Dresden Unit 2. Dresden Unit 2 is a BWR 3 design, with a rated flow for one core spray loop of 4600 gpm. Core spray pump flow is periodically tested to ensure that the rated flow is available should the need arise.

There are other parameters and conditions in the GE evaluation that are different from those existing at Dresden Unit 2. However, as discussed below the conclusions of this report are applicable to Dresden Unit 2.

- The above mentioned report was based on GE's 8x8 fuel. The next operating cycle for Dresden Unit 2 will utilize 100% ANF 9x9 fuel. This fuel has improved reflooding characteristics with a "flatter" peak temperature per pin and lower stored energy than 8x8 fuel (See Section 9 of Reference 1).

- The rated core spray flow of 4600 gpm is based on a vessel pressure of 90 psig. However, as the vessel continues to depressurize following the DBA-LOCA, the core spray flow will continue to increase until the equilibrium is reached between the vessel and drywell or until system maximum flow is reached (See Section 9 of Reference 1 for the effect of the increased flow).

- The current DBA-LOCA evaluation uses conservative estimates for other "known" leakages (i.e. through the plenum access holes, core shroud, bottom head drain line, jet pump hold down bolts, etc).

- This evaluation assumes that there will be no flow to the spargers through the failed core spray loop. Since only one of the two downcomers will contain the postulated 360° circumferential failure, some flow will be delivered through the intact downcomer, as well as the downcomer with the postulated break.

Thus, based on the GE Licensing Topical Report and the discussion above, for the postulated beyond design basis scenario with failure of one core spray loop due to the postulated break in the core spray downcomer elbow, core cooling could still be provided by the intact core spray loop.

7.2 Probabilistic Safety Assessment

A probabilistic evaluation was made for two scenarios. The first scenario is a reactor recirculation suction line break followed by failure of the LPCI system. The second scenario is a SSE occurring concurrently with the events in the first scenario. The probability of structural failure of a degraded core spray line was conservatively neglected. This approach is conservative because if such a structural failure had been included in the events postulated for the scenarios, then the scenario frequencies calculated below would have been multiplied by a structural failure probability estimate.

7.2.1 Frequency Estimate for Scenario 1

The first scenario postulates a reactor recirculation suction line break followed by failure of the LPCI system. This scenario was chosen because it is within the unit's design basis, and represents the most critical case with respect to peak cladding temperature calculations. For this scenario:

Frequency of Event = Line Break Frequency x LPCI Failure Probability

The frequency of a reactor recirculation suction line break was previously estimated as 5.6×10^{-6}/year (Reference 12). In the Dresden PRA model for a large LOCA, LPCI failure is dominated by failure of the necessary LPCI injection path. The model for the LPCI injection path includes the loop injection valves, loop injection check valves, loop selection logic and other supporting equipment. For a large LOCA (including a reactor recirculation suction line break), the Dresden Individual Plant Evaluation (Reference 15) gives a LPCI injection path failure probably of 2.5×10^{-3}. This value is used for the LPCI failure probability. Thus, the frequency of the postulated scenario is:

Frequency of Scenario 1 = 5.6×10^{-6}/yr x 2.51×10^{-3} = 1.4×10^{-8}/yr.

As stated above, this event probability conservatively ignores the probability of a structural failure of the core spray system.

7.2.2 Frequency Estimate for Scenario 2

The second scenario postulates a SSE concurrently with the reactor recirculation line break and failure of the LPCI system. This postulated scenario is outside the original plant design basis.

Following the approach previously used for other reactor internal evaluations (Reference 16), a concurrent SSE is postulated to occur within 24 hours of the event in Scenario 1. Thus, the frequency of this scenario is:

Frequency of Scenario 2 = (SSE Frequency)/365 x (Frequency of Scenario 1)

The frequency of a seismic event exceeding the SSE is 5×10^{-5}/yr (Reference 16). Using this value and the frequency estimate for Scenario 1 gives:

Frequency of Scenario 2 = $(5 \times 10^{-5}/yr)/365 \times 1.4 \times 10^{-8}/yr = 2 \times 10^{-15}/yr$.

As stated above, this event probability conservatively ignores the probability of a structural failure of the core spray system.

7.2.3 Conclusions of Probabilistic Safety Assessment

Based on the low values of the calculated frequencies for the two scenarios, it can be concluded that the likelihood of the occurrence of either scenario is very small, and neither scenario is risk significant.

8.0 LOOSE PARTS EVALUATION

As part of the evaluation of the cracked core spray sparger, a scenario has been postulated where an elbow of the lower sparger inlet piping breaks off. This section of piping is assumed to fall into the vessel annulus region. An evaluation has been performed to address the safety concerns raised as a result of this loose piece.

8.1 Postulated Loose Part

The postulated loose part is a curved, stainless steel elbow. Based on the location of the observed cracks in core spray loop "B" (at the top of the elbow and in the thermal sleeve at the elbow penetration into the core shroud) the entire elbow is the most likely part to break loose. There may also be debris created as a result of rubbing and scraping of the elbow on vessel internal components.

8.2 Safety and Operational Concerns

The safety and operational concerns associated with this postulated loose part are:

- Potential for fuel bundle flow blockage and consequent fuel damage,
- Potential for fretting wear of the fuel cladding,
- Potential for interference with control rod operation,
- Potential for corrosion or chemical reaction with other reactor materials.

The elbow is postulated to break away from the core spray piping and fall into the downcomer region. This is reasonable since it is part of the piping in the annulus region outside the shroud.

8.2.1 Potential for the Fuel Bundle Flow Blockage and Consequent Fuel Damage

The elbow is located in the annulus region. Because of its size it will be unable to leave the annulus region. The jet pump throat is too small to pass the elbow and the jet pump nozzle is far too small to pass the part

into the lower plenum. Therefore, the elbow itself cannot create a fuel bundle flow blockage. Debris created by the falling part is small enough to enter the lower plenum. Once in the lower plenum, the flow velocities are sufficiently large that the debris will be carried toward the fuel support inlet orifice. Because of its size the debris will not restrict the flow through the fuel support inlet orifice.

Depending upon the size of the debris, it may or may not pass through the lower tie plate openings. Even if it becomes trapped in the lower tie plate, the flow blockage would be quite small and distributed throughout the fuel assemblies. Therefore, no boiling transition would occur.

There is no concern for fuel bundle flow blockage due to the postulated lost.

8.2.2 Potential for Fretting Wear of Fuel Cladding

If debris is created by the elbow rubbing on vessel internal parts, it could be small enough to be carried upward past the lower tie plate openings. It may become trapped at a fuel bundle spacer. This may cause the debris to rub over a small surface of a fuel rod. Prolonged operation may lead to fretting wear and leaks in the fuel rod. Any fuel cladding leaks would be detected by the off-gas system so that appropriate action can be taken to maintain the offsite radiation release within acceptable limits. Any such cladding damage would be an operational or economic concern, not a safety concern.

8.2.3 Potential for Interference with Control Rod Operation

If debris is carried past the lower tie plate it would have to travel through the fuel bundle spacers, exit the fuel channel through the upper tie plate, reverse direction, and travel downward so that it could enter the control rod guide tube. This is an extremely unlikely trajectory. Once in the control rod guide tube, the debris would have to pass through the clearance between the velocity limiter and the guide tube wall and continue to fall. Once past the velocity limiter, it is very likely that piece would drop to the outer edge of the guide tube bottom. Once resting there, the debris is not likely to be lifted because there is no upward flow velocity in the outer edge of the guide tube bottom. Even if debris were

lifted from the bottom, it would have to rise above the ridge surrounding the annulus between the index tube and the guide tube bottom, move over the annulus opening, orient itself in such a way as to enable travel through the very small gap and then fall into the control rod drive (CRD) mechanism. This would all occur against CRD cooling flow. This is considered highly unlikely. Even if this should happen, the debris would not have sufficient mechanical strength to impair either the safety function (scram) or normal control rod drive operation. Consequently, there is no concern for potential interference with the CRD operation due to the postulated lost part.

8.2.4 Potential for Corrosion or Chemical Reaction with Other Reactor Materials

Since the postulated loose part is made of stainless steel, a material approved for in reactor use, there is no concern for corrosion or chemical reaction with other reactor materials.

8.3 Conclusion of the Loose Parts Evaluation

The safety evaluation conducted for the postulated core spray sparger elbow and debris has concluded that there is no potential for significant fuel bundle flow blockage, no safety concern due to cladding wear, no potential for interference with control rod operation and no potential for corrosion or adverse chemical reaction with other reactor materials. Thus, there are no safety concerns raised by the postulated break of the elbow of the core spray lower sparger inlet piping and fuel cooling throughout the core and control rod operation can be maintained.

9.0 CONCLUSION

Crack indications were identified at three locations on the core spray downcomers during the D2R14 in vessel visual inspections. This core spray line inspection was planned and implemented as part of a thorough rebaselining inspection of the reactor internals. The approach used to define and evaluate the flaws in the Dresden Unit 2 core spray downcomers was complete and thorough, and addressed all relevant parameters. The philosophy was to fully utilize all of the latest industry and plant specific information to plan and execute the inspections as well as the engineering evaluations. This is reflected in the thorough and detailed visual inspections that were performed along with the use of ultrasonic testing to corroborate and clarify the inspection results. The stress analysis and flaw evaluations were performed using verified design inputs for all key analysis parameters. Where the analysis parameters were determined to have a significant impact on the analysis or evaluation, a conservative bounding value was selected, or a sensitivity study was performed. Provided below is a summary description of the evaluations performed along with the conclusions reached.

The details of the visual and ultrasonic examination results are defined in Section 2 of this report. The critical flaw identified was a 3.5 inch long crack in the B-loop inlet elbow. This crack was conservatively assumed to be through wall and was extended using a bounding IGSCC crack growth rate of 5.0×10^{-5} for a 21 month operating cycle to a evaluated flaw length of 4.86 inches. The UT methodology developed and utilized as part of the flaw characterization was prequalified and independently verified by industry experts. The approach and methods used represent the best available in the industry and provide an accurate basis for performing a flaw evaluation.

The materials evaluation included a detailed assessment of the inspection records, the fabrication details and the key metallurgical analysis parameters as well as a review of relevant industry information. The review of the inspection results and pertinent industry experience indicates that the flaws are the result of IGSCC. The fabrication records were reviewed as part of the determination of the cause of the cracking as well as to identify the appropriate material properties for the flaw evaluations. The review of the material behavior and other aspects provided corroboration of the conclusion that the flaws were IGSCC and thus a conservative crack growth rate was selected for the flaw evaluations. The results of the materials evaluation performed by the ComEd metallurgists were verified by an independent industry expert.

The flaw evaluation was precluded by a thorough and complete review of the applicable loads and load combinations for the affected piping (see Reference 1). The flaw evaluations and sensitivity study were performed using the ASME Section XI, Appendix C limit load methods. The evaluations performed include an assessment of the key analysis parameters and provides results based on the limits of these parameters. The critical elbow flaw has a load margin under design basis load combinations of 38 times the ASME code factor of safety. The critical thermal sleeve collar flaw has a load margin under design basis load combinations of 41 times the ASME code factor of safety. The sensitivity study concluded that even with consideration of all of the upper bound limits of the analysis parameters, a load margin of 3.0 times the ASME code safety factor exists for design basis load combinations. This load margin corresponds to an operating cycle length of 100 months with the upper bound crack growth rate prior to meeting the code specified factors of safety. These results clearly corroborate the conclusion that the core spray piping is very flaw tolerant and has sufficient margin to perform it's design basis function for the next operating cycle.

The leakage flow was calculated using the end of the operating cycle crack lengths in conjunction with the bounding flaw section stresses. The estimated leakage of 1 gpm for the system operating flow rate of 4600 gpm results in no significant increase in the peak cladding temperature (PCT). The leakage associated with the end of life crack size is approximately 70 gpm resulting in an increase in the PCT of approximately 8° F. The effect of these changes in the PCT is insignificant and is well within the existing design basis margin. A bounding failure assessment was performed to verify that adequate design margin exists. This assessment was performed using both a deterministic and probabilistic approach. The deterministic approach evaluated three scenarios: 1) reactor recirculation line break, 2) SSE and 3) reactor recirculation line break with single failure of the LPCI injection valve. In each of the scenarios, core cooling can be maintained with existing ECCS systems. The probabilistic approach postulated two scenarios: 1) reactor recirculation line break in combination with a failure of the LPCI system and 2) reactor recirculation line break in combination with a failure of the LPCI system and concurrent SSE. The frequency of these events was calculated to be 1.4×10^{-8}/year and 2×10^{-15}/year, respectively. Thus, both scenarios can be concluded to be non risk significant. The potential effects of a loose part resulting from the cracked core spray sparger was evaluated. It was postulated that an elbow of the lower core spray sparger inlet piping breaks off and falls into the reactor vessel annulus region and that debris is created as a result of the rubbing and scrapping of the elbow on internal vessel components. Four safety and operational concerns associated with the postulated loose part and debris were evaluated: 1)

potential for fuel bundle flow blockage and consequent fuel damage, 2) potential for fretting wear of the fuel cladding, 3) potential for interference with control rod operation and 4) potential for corrosion or chemical reaction with other reactor materials. The evaluation found no safety or operational concerns associated with the postulated loose part or debris. The combined assessment of the system structural margin as well as core spray system functional capacity confirm the conclusion that sufficient margin exists to operate for one cycle with the identified flaws. A complete reinspection of these flaws and the complete core spray system will be included in the next IVVI plan and will serve as the basis for continued monitoring of the cracking in the core spray system.

10.0 REFERENCES

1. ComEd Report, "Dresden Unit 2 Core Spray Flaw Evaluation Report", September 1995.

2. SL-4973 Revision 0, "Safety Assessment of Horizontal Core Shroud Welds H1 Through H7 for Cycle 14 Operation of Dresden Unit 2", December 12, 1994

3. Dresden RPV Thermal Cycle Diagram, 921D265, Rev. 1

4. August 9, 1995 letter from G. Selby of EPRI NDE Center to J. Whitman of ComEd, "UT Technique for Dresden Core Spray Piping".

5. SL-5019 Revision 0, "Dresden Unit 2 Core Spray Flaw Evaluation Report", September 1995.

6. ASME B&PV Code Section XI, Appendix C, 1989.

7. Evaluations of Flaws in Austenitic Steel Piping", EPRI NP-4690-SR, July 1986.

8. ASME B&PV Code Section III, Appendix I, 1989.

9. Sargent & Lundy Calculation 9389-64-DQ.

10. SIA Calculation CECO-42Q-301, Revision 0, "Compliance Study of Flawed Pipe".

11. NEDC-30936P-A, "BWR Owner's Group Technical Specification Improvement Methodology (with Demonstration for BWR ECCS Actuation Instrumentation) Part 1, December 1988.

12. R. H. Johnson memorandum to J. D. Williams and M. H. Richter, "Estimate of Large Recirculation Pipe Frequencies for Dresden 2 & 3 and Quad Cities 1 & 2", dated 7-11-94.

13. NUREG-0313, Revision 2,"Technical Report on Material Selection and Processing Guidelines for BWR Coolant Pressure Boundary Piping".

14. "PICEP: Pipe Crack Evaluation Program (Revision 1)", EPRI NP-3596-SR, Revision 1, December 1987.

15. Individual Plant Evaluation Partnership (IPEP), "Dresden Nuclear Power station Units 2 and 3, System Notebook for Low Pressure Coolant Injection System and Containment Cooling Service Water System", Revision 0, February 1993.

16. G. T. Klopp memorandum to D. H. Legler, "PRA Input to Support Dresden Shroud Cracking Evaluations," dated 5-13-94.

17. SL-5020 Revision 0, "Dresden Unit 2 Integrated Evaluation Report of Core Spray Flaws", September 1995.