Commonwealth Edison
1400 Opus Place
Downers Grove, Illinois 60515

September 30, 1991

Dr. Thomas E. Murley, Director
Office of Nuclear Reactor Regulation
U.S. Nuclear Regulatory Commission
Washington, DC 20555

Attn: Document Control Desk

Subject: Dresden Nuclear Power Station Units 2 and 3
Quad Cities Nuclear Power Station Units 1 and 2
Alternate 125 VDC Batteries
NRC Docket Nos. 50-237/249 and 50-254/265

Reference: R. Stols (CECo) letter to A. Bert Davis
(NRC, Region III), dated April 3, 1989.

Dear Dr. Murley:

The purpose of this letter is to followup on previous discussions with your staff with respect to the alternate 125 VDC batteries at Dresden (Units 2 and 3) and Quad Cities (Units 1 and 2) Stations. The Attachment to this letter provides: 1) a description of the 125 VDC System design; 2) an overview of the alternate 125 VDC battery design and installation; 3) an overview of the Technical Specification changes to be proposed, and a schedule for submittal of these amendments; and 4) the controls which will be imposed on any alternate battery usage prior to receipt of the amended Technical Specifications.

Please contact this office should further information be required.

Respectfully,

Milton H. Richter

Milton H. Richter
Nuclear Licensing Administrator

Attachment: Alternate 125 VDC Batteries for Dresden and
Quad Cities Stations

cc: A. Bert Davis, Regional Administrator - RIII
B.L. Siegel, NRR Project Manager - Dresden
W.G. Rogers, Senior Resident Inspector - Dresden
L.N. Olshan, NRR Project Manager - Quad Cities
T.E. Taylor, Senior Resident Inspector - Quad Cities

/sch1130:15

A001
1/1

ATTACHMENT

ALTERNATE 125 VDC BATTERIES

FOR

DRESDEN AND QUAD CITIES STATIONS

For Dresden (Units 2 and 3) and Quad Cities (Units 1 and 2) Stations, this Attachment provides: 1) a brief description of the 125 VDC System design; 2) an overview of the alternate 125 VDC battery design and installation; 3) an overview of the Technical Specification changes to be proposed for the alternate 125 VDC battery, and a schedule for submittal of those proposed amendments; and 4) the controls which will be imposed on any alternate battery usage prior to receipt of the amended Technical Specifications.

125 VDC SYSTEM DESIGN

For Dresden and Quad Cities Stations, the 125 VDC electrical distribution system for each unit consists of two separate divisions. These divisions are provided DC power by two 125 VDC battery systems (one per unit), which consist of a 125 VDC battery and two chargers as shown on Figure 1. The normal operating configuration has the 125 VDC System cross-tied between units such that each battery system is supplying power to one of the two 125 VDC divisions for each unit. The battery charger is the normal source of DC power, with the battery as a backup power source in the event the battery charger becomes unavailable. The 125 VDC System, in general, supplies control power for switchgear and engineered safety features.

ALTERNATE BATTERY DESIGN AND INSTALLATION

Currently, a safety-related alternate 125 VDC battery has been installed for each unit at Dresden (Units 2 and 3) and Quad Cities (Units 1 and 2) Stations. The original installation, and use, of the alternate battery occurred at Quad Cities Unit 2 to support replacement of the permanent 125 VDC battery during mid-cycle operation (Reference 1). An alternate battery was subsequently installed at Quad Cities Unit 1, and Dresden Units 2 and 3, with the primary purpose of supporting the performance of the rated discharge test (as required by the Technical Specifications) on the permanent battery. The alternate battery is utilized to avoid the dual unit outage which is normally entered in order to perform the discharge test on the permanent battery.

The alternate battery for each unit has been supplied by the same vendor (GNB) as the permanent battery, and is the same type of battery (lead-calcium battery). The alternate batteries have been sized to carry the normal DC loads and the required safe shutdown loads as described in the Dresden and Quad Cities FSAR/UFSAR (Section 8). The capacity of each alternate battery meets or exceeds that of its associated permanent battery. The alternate batteries have been seismically qualified by the vendor to meet the specified design basis loads and are mounted in seismically designed and installed racks. All associated conduit is also designed and installed for seismic application. The connections which join the alternate batteries to the permanent distribution system, including cables and terminations, are all Class 1E. Additionally, fire protection and heating, ventilation, and air conditioning (HVAC) considerations have been addressed as discussed in the following sections for each unit.

ALTERNATE BATTERY DESIGN AND INSTALLATION (continued)

Quad Cities Unit 2

The Quad Cities Unit 2 alternate battery was installed in May 1989 to provide an alternate source of DC power during the replacement of the permanent battery. The alternate battery is located on the Unit 2 Turbine Building Mezzanine floor near the Unit 2 battery charger room. The Class II Turbine Building is qualified to withstand the UFSAR Design Basis earthquake and tornado loads. This ensures that the turbine building structure has been qualified to support the seismic and/or tornado reactions in addition to the normal operating design loads. The location of the alternate battery, however, does not provide the tornado missile protection required by the Quad Cities UFSAR (Section 12). To address this concern, a risk analysis was performed to determine the probability of a tornado missile striking the alternate battery. The results of this analysis were then reviewed against guidance found in Standard Review Plan 3.5.1.5 and Regulatory Guide 1.117. From the analysis, it was determined that the probability of a tornado missile event for the alternate battery is 1 E-7 for a period of 52 days during a calendar year. Therefore, a usage period of less than 52 days per year will maintain the probability below a threshold level (1 E-7) where tornado missiles are not a concern.

Fire protection and HVAC considerations were also assessed for the location of the alternate battery. The increase in total combustible loading caused by the addition of the alternate battery was evaluated and found acceptable (within the limits of the NRC SER for Appendix 'R' exemptions, dated 07/21/88). Additionally, the current fire detection equipment in the area will provide notification to control room personnel in the event of any abnormal conditions. The turbine building ventilation system was also found adequate for the dispersion of the additional hydrogen generation and for maintaining the battery at the proper temperature. The alternate battery is a GNB type NCX-21 as is the permanent battery.

Quad Cities Unit 1

The Quad Cities Unit 1 alternate battery was installed in December 1989, and is located inside the Unit 1 permanent battery room. This location provides the alternate battery with the same seismic and tornado missile protection that is provided for the permanent battery. The existing fire detection and HVAC systems which service the battery room were assessed and found sufficient for the addition of the alternate battery. The alternate battery is a GNB type NCX-21 as is the permanent battery.

Dresden Unit 2

The Dresden Unit 2 alternate battery was installed in September 1990, and is located in the Dresden Unit 1 HPCI Building east battery room. This location was originally designed to house a battery and as such provides adequate seismic and tornado missile protection. Also, inherent in the battery room design were provisions for both fire protection and HVAC. The room is equipped with fire

ALTERNATE BATTERY DESIGN AND INSTALLATION (continued)

detection equipment (for the notification of control room personnel), and with two heating/cooling units as well as exhaust fans to ensure hydrogen dispersion and proper temperature control. Because of the physical distance between the alternate battery and the DC distribution panel, the associated voltage drop was considered when sizing the alternate battery. The alternate battery is larger in size (NCX-27) than the permanent battery (NCX-21) and uses more cells (60 versus 58). Although the present capacity of the alternate battery is adequate for the required loads, the voltage drop due to the length of cable reduces the overall capacity margin of the battery. CECo is evaluating options which will either increase the capacity margin of the alternate battery, or establish a minimum acceptable capacity for operation of the alternate battery. Additionally, it was determined that use of the larger battery did not create any distribution panel overduty concerns.

Dresden Unit 3

The Dresden Unit 3 alternate battery was installed in August 1991. The alternate battery is a GNB type NCX-21 as is the permanent battery. The alternate battery is located on the Unit 3 Turbine Building Mezzanine floor outside the Unit 3 battery charger room. The Class II Turbine Building is qualified to withstand the UFSAR Design Basis earthquake and tornado loads. This ensures that the turbine building structure has been qualified to support the seismic and/or tornado reactions in addition to the normal operating design loads. This location, however, does not provide the tornado missile protection required by the Dresden UFSAR (Section 12). To address this concern, a risk analysis was performed to determine the probability of a tornado missile striking the alternate battery. The results of this analysis were then compared to acceptance values found in Standard Review Plan 3.5.1.5 and Regulatory Guide 1.117. From the analysis, it was determined that the probability of a tornado missile strike is below 1 E-7 for an entire calendar year (0.87 E-7). Therefore, the current location of the alternate battery maintains the probability of a tornado missile event below a threshold level where the event is not a concern.

The difference between the results of the risk analyses for Dresden Unit 3 and Quad Cities Unit 2 is attributed to primarily two factors. First, the proximity of the Dresden reactor building with respect to the location of the Unit 3 alternate battery affords additional tornado missile shielding; thereby reducing the available missile paths toward the battery. This reactor building shielding could not be similarly credited in the Quad Cities (Unit 2) analysis. Secondly, as a result of the Dresden Unit 2 Systematic Evaluation Program (SEP), site-specific information with respect to tornado occurrence rates was available for use in the Unit 3 analysis.

Fire protection and HVAC considerations were also assessed for the location of the alternate battery. The turbine building location has been evaluated for the additional combustible loading and has been found acceptable (within the limits of the NRC SER for Appendix 'R' exemptions, dated 01/05/89). Additionally, the current fire detection equipment in the area will provide notification to control room personnel in the event of any abnormal conditions. With respect to HVAC considerations, although the turbine building ventilation system was found adequate for the dispersion of the additional hydrogen generated by the alternate battery, it was determined that three additional heaters would be installed to ensure the battery is maintained at proper operating temperatures. These heaters have been seismically mounted because of their close proximity to the battery.

ALTERNATE BATTERY DESIGN AND INSTALLATION (continued)

The manner in which the alternate battery is connected to its DC distribution system is common for all four units. As shown on Figure 2, the alternate battery (as well as one of the permanent battery chargers) is connected to the load-side of a breaker/fusible disconnect at the 125 VDC Division I Main Bus, which serves the reserve feed between Divisions I and II. The reserve feed between the divisions is normally isolated (breakers/fusible disconnects at the respective buses are open) to provide electrical separation for the distribution system. Following installation, the alternate battery is closed into the system (closed into the 125 VDC Division I Main Bus), momentarily paralleling the alternate battery with the permanent battery. The permanent battery is then removed from the system (by opening its output breaker at the 125 VDC Division I Main Bus) without disruption of DC power to the distribution system. The alternate battery provides the same functional interface with the 125 VDC distribution system as the permanent battery; that is, the battery charger provides the primary source of power to the distribution system as well as the float charge to the alternate battery (which is the secondary source of power). Additionally, control room indications for the status of the 125 VDC distribution system, and battery charger, are still available when the alternate battery is utilized. For removal of the alternate battery, the sequence of events previously discussed is reversed.

TECHNICAL SPECIFICATIONS

The Technical Specifications (3.9/4.9, Auxiliary Electrical Systems) for Dresden and Quad Cities Stations do not currently reflect the 125 VDC alternate batteries. As recently discussed with your staff, Commonwealth Edison Company will be incorporating the alternate 125 VDC batteries into the Technical Specifications. The following provides an overview of the major changes which will be proposed to the Technical Specifications for each unit.

- The Technical Specifications currently require both 125 VDC batteries to be operable. The proposed amendment will allow for either the permanent or alternate battery for each unit to be utilized to meet the operability requirements. Additionally, any usage restrictions (e.g., allowed annual usage time) for the alternate battery will be specified.

- Although the stations have been performing, and intend to continue to perform, the Technical Specification battery surveillances on the alternate batteries to ensure operational readiness; the proposed amendment will indicate that the battery surveillance requirements are only applicable to the 125 VDC battery which is being utilized to satisfy the operability requirements of the Technical Specifications.

- The bases section will be revised to delineate that the 125 VDC System for each unit consists of a permanent and an alternate battery, and that the alternate battery will be used as a backup to the permanent battery.

It is expected that the proposed Technical Specification amendments for Dresden and Quad Cities Stations will be submitted during the first quarter of 1992.

CONTROLS ON ALTERNATE BATTERY USAGE

As indicated previously, the alternate battery, which is considered a backup to the permanent battery, was primarily installed to support surveillance testing (rated discharge testing) of the permanent battery. However, it was also recognized that an alternate battery could be utilized during other periods when the permanent battery is unavailable (e.g., maintenance/repair, etc.). Prior to use of an alternate battery, the Technical Specification battery surveillance requirements (Dresden surveillance requirement 4.9.A/ Quad Cities surveillance requirement 4.9.B) are verified to be current for the alternate battery. While the alternate battery is installed, surveillance testing will be conducted on the battery as required by the Technical Specifications. Additionally, any usage time requirements are administratively controlled.

Shift personnel are notified of alternate battery usage, and the system configuration, during normal shift turnover briefings. As previously indicated, normal control room indications for the status of the 125 VDC distribution system are still available when the alternate battery is utilized. Additionally, the transfer between the normal and alternate battery configurations is procedurally controlled.

REFERENCES

1. R. Stols (CECo) letter to A. Bert Davis (NRC, Region III), dated April 3, 1989, "Quad Cities Station Unit 2 125 VDC Battery Replacement".

/scl:1130:20

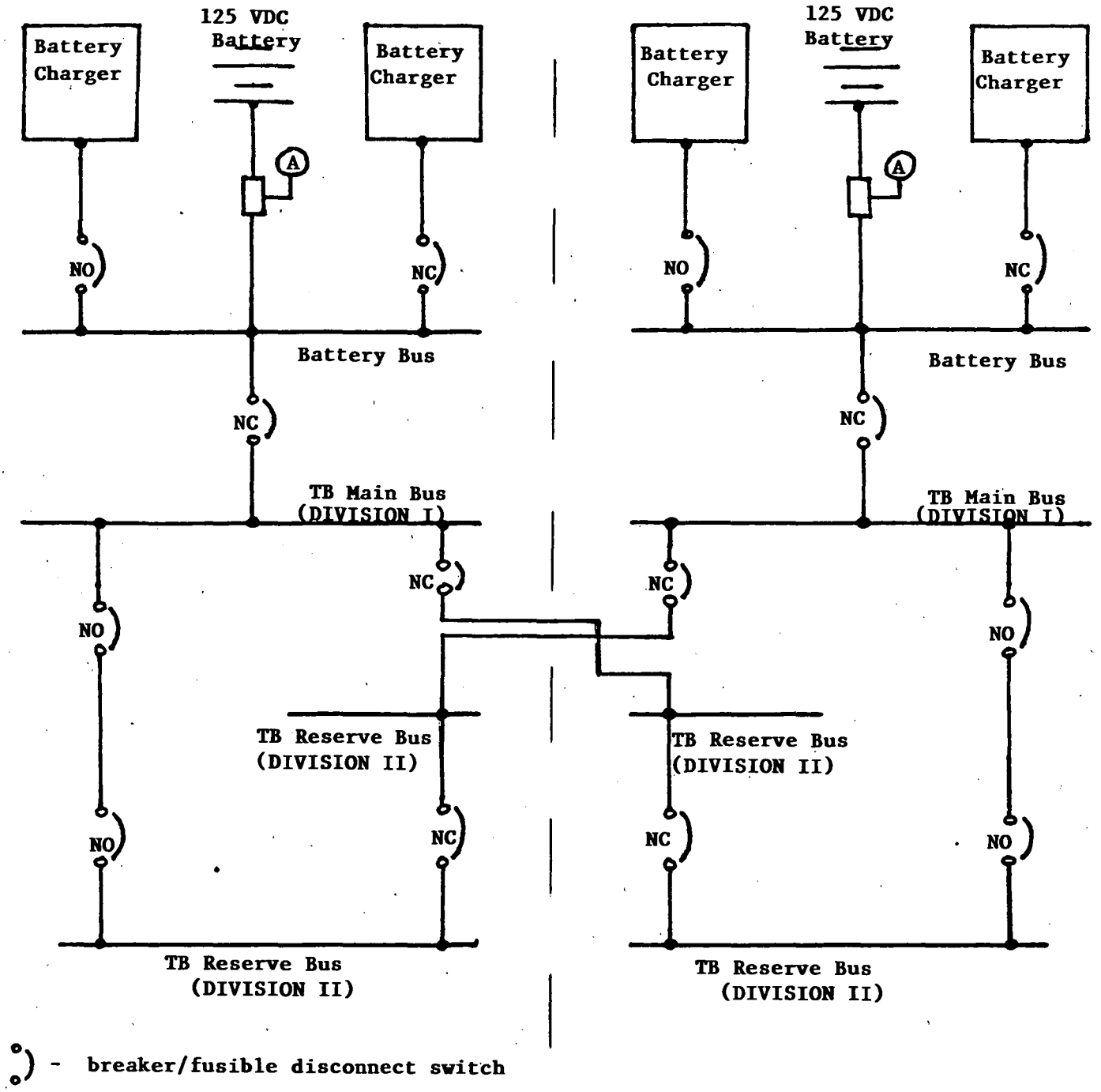

FIGURE 1
Simplified Diagram of 125 VDC Distribution System
(Typical for Dresden and Quad Cities Stations)

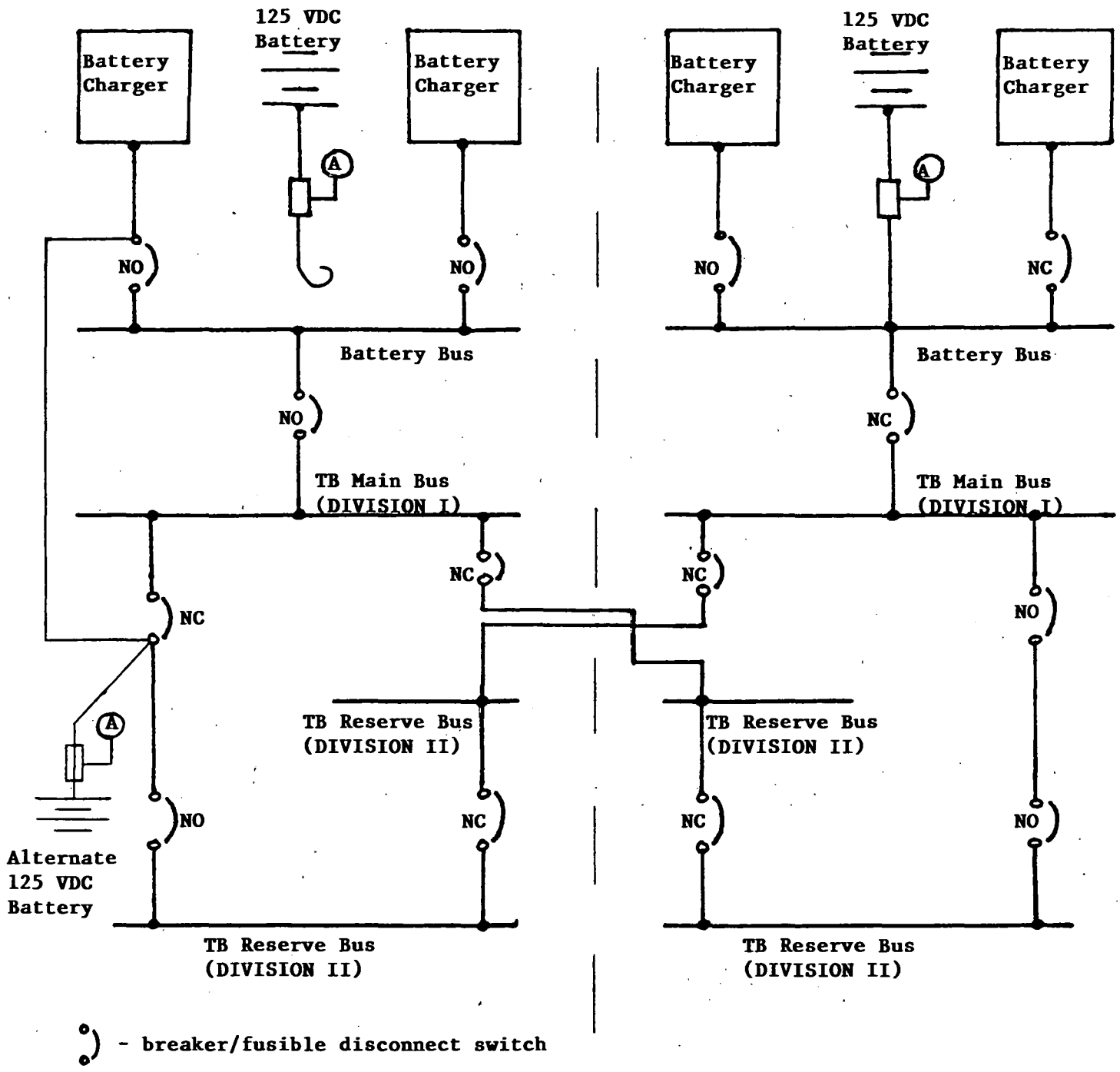

FIGURE 2
Simplified Diagram of 125 VDC Distribution System
with Alternate Battery
(Typical for Dresden and Quad Cities Stations)