UFSAR Table of Contents

Chapter 1 — Introduction and General Description of the Plant

Chapter 2 — Site Characteristics

Chapter 3 — Design of Structures, Components, Equipment and Systems

Chapter 4 — Reactor

Chapter 5 — Reactor Coolant System and Connected Systems

Chapter 6 — Engineered Safety Features

Chapter 7 — Instrumentation and Controls

Chapter 8 — Electric Power

Chapter 9 — Auxiliary Systems

Chapter 10 — Steam and Power Conversion

Chapter 11 — Radioactive Waste Management

Chapter 12 — Radiation Protection

Chapter 13 — Conduct of Operation

Chapter 14 — Initial Test Program

Chapter 15 — Accident Analyses

Chapter 16 — Technical Specifications

Chapter 17 — Quality Assurance

Chapter 18 — Human Factors Engineering

Chapter 19 — Probabilistic Risk Assessment

UFSAR Formatting Legend

Color	Description
	Original Westinghouse AP1000 DCD Revision 19 content (part of plant-specific DCD)
	Departures from AP1000 DCD Revision 19 content (part of plant-specific DCD)
	Standard FSAR content
	Site-specific FSAR content
	Linked cross-references (chapters, appendices, sections, subsections, tables, figures, and references)

TABLE OF CONTENTS

Section	Title	Page
CHAPTER 8	ELECTRIC POWER	8.1-1
8.1	Introduction	8.1-1
8.1.1	Utility Grid Description	8.1-1
8.1.2	Onsite Power System Description	8.1-1
8.1.3	Safety-Related Loads	8.1-3
8.1.4	Design Basis	8.1-3
8.1.4.1	Offsite Power System	8.1-3
8.1.4.2	Onsite Power System	8.1-3
8.1.4.3	Design Criteria, Regulatory Guides, and IEEE Standards	8.1-4
8.1.5	Combined License Information	8.1-5
8.2	Offsite Power System	8.2-1
8.2.1	System Description	8.2-1
8.2.1.1	Transmission Switchyard	8.2-3
8.2.1.2	Transformer Area	8.2-6
8.2.1.3	Switchyard Control Building	8.2-7
8.2.1.4	Switchyard and Transmission Lines Testing and Inspection	8.2-7
8.2.2	Grid Stability	8.2-8
8.2.3	Conformance to Criteria	8.2-10
8.2.4	Standards and Guides	8.2-11
8.2.5	Combined License Information for Offsite Electrical Power	8.2-11
8.2.6	References	8.2-11
8.3	Onsite Power Systems	8.3-1
8.3.1	AC Power Systems	8.3-1
8.3.1.1	Description	8.3-1
8.3.1.2	Analysis	8.3-12
8.3.1.3	Raceway/Cable	8.3-12
8.3.1.4	Inspection and Testing	8.3-13
8.3.2	DC Power Systems	8.3-14
8.3.2.1	Description	8.3-14
8.3.2.2	Analysis	8.3-19
8.3.2.3	Physical Identification of Safety-Related Equipment	8.3-19
8.3.2.4	Independence of Redundant Systems	8.3-20
8.3.2.5	Inspection and Testing	8.3-22
8.3.3	Combined License Information for Onsite Electrical Power	8.3-23
8.3.4	References	8.3-24

LIST OF TABLES

Table Number	Title	Page
8.1-1	Criteria and Guidelines for Electric Power Systems	8.1-6
8.1-201	Not Used	8.1-10
8.2-201	Grid Stability Interface Evaluation	8.2-12
8.3.1-1	Onsite Standby Diesel Generator ZOS MG 02A Nominal Loads	8.3-26
8.3.1-2	Onsite Standby Diesel Generator ZOS MG 02B Nominal Loads	8.3-31
8.3.1-3	Component Data - Main AC Power System (Nominal Values)	8.3-36
8.3.1-4	Post-72 Hours Nominal Load Requirements	8.3-37
8.3.1-5	Indication and Alarm Points Standby Diesel Generators	8.3-38
8.3.2-1	250V DC Class 1E Division A Battery Nominal Load Requirements	8.3-39
8.3.2-2	250V DC Class 1E Division B Battery Nominal Load Requirements	8.3-40
8.3.2-3	250V DC Class 1E Division C Battery Nominal Load Requirements	8.3-41
8.3.2-4	250V DC Class 1E Division D Battery Nominal Load Requirements	8.3-42
8.3.2-5	Component Data - Class 1E DC System (Nominal Values)	8.3-43
8.3.2-6	Component Data - Non-Class 1E DC System EDS1 – EDS4 (Nominal Values)	8.3-44
8.3.2-7	Class 1E 250V DC and Class 1E Uninterruptible Power Supplies Failure Modes and Effects Analysis	8.3-47

LIST OF FIGURES

Figure Number	Title	Page
8.2-201	Offsite Power System One-Line Diagram	8.2-13
8.2-202	Switchyard General Arrangement	8.2-14
8.3.1-1	AC Power Station One Line Diagram	8.3-51
8.3.1-2	Onsite Standby Diesel Generator Initiating Circuit Logic Diagram	8.3-52
8.3.1-3	Ancillary Diesel Generator One Line Diagram	8.3-53
8.3.1-4	(Sheet 1 of 2) Simplified Diesel Generator System Piping and Instrumentation Diagram	8.3-54
8.3.1-4	(Sheet 2 of 2) Simplified Diesel Generator System Piping and Instrumentation Diagram	8.3-55
8.3.1-5	(Sheet 1 of 2) Diesel Engine Skid Mounted System	8.3-56
8.3.1-5	(Sheet 2 of 2) Diesel Engine Skid Mounted System	8.3-57
8.3.2-1	(Sheet 1 of 2) Class 1E DC System One Line Diagram	8.3-58
8.3.2-1	(Sheet 2 of 2) Class 1E DC System One Line Diagram	8.3-59
8.3.2-2	Class 1E 208y/120V UPS One Line Diagram	8.3-60
8.3.2-3	(Sheet 1 of 3) Non-Class 1E DC & UPS System One Line Diagram	8.3-61
8.3.2-3	(Sheet 2 of 3) Non-Class 1E DC & UPS System One Line Diagram	8.3-62
8.3.2-3	(Sheet 3 of 3) Non-Class 1E DC & UPS System One Line Diagram	8.3-63

Chapter 8 Electric Power

8.1 Introduction

8.1.1 Utility Grid Description

VEGP is interconnected to the Southern Balancing Authority Area (SBAA) transmission grid operated by Southern Company Transmission (SCT). The SBAA transmission grid consists of transmission facilities owned by Alabama Power Company, Georgia Power Company, Gulf Power Company, and Mississippi Power Company, all subsidiaries of the Southern Company and Georgia Transmission Corporation, the Municipal Electric Authority of Georgia and Dalton Utilities, who along with Georgia Power Company are participants in and make up the Georgia Integrated Transmission System. The SBAA transmission grid is interconnected with Duke Power Company, South Carolina Electric and Gas Company, South Carolina Public Service Authority (Santee Cooper), Florida Power and Light Company, Progress Energy, City of Tallahassee, Entergy Gulf States, Entergy Louisiana, Mississippi Power and Light, and the Tennessee Valley Authority. The SBAA transmission grid interconnects hydro plants, fossil-fueled plants, and nuclear plants supplying electric energy over a transmission grid consisting of various voltages up to 500 kV.

VEGP Units 3 and 4 are located in eastern Burke County, Georgia, approximately 26 miles southeast of Augusta, Georgia and 100 miles northwest of Savannah, Georgia, directly across the Savannah River from the US Department of Energy's Savannah River Site in Barnwell County, South Carolina. VEGP Units 1 and 2, which are two Westinghouse Electric Company, LLC (Westinghouse) pressurized water reactors (PWRs), have been in commercial operation since 1987 and 1989, respectively. Plant Wilson, a six-unit oil-fueled combustion turbine facility owned by Georgia Power Company (GPC), is also located on the VEGP site. VEGP Units 3 and 4 are adjacent to and west of VEGP Units 1 and 2. VEGP Units 1 and 2 are co-owned by Georgia Power Company, Oglethorpe Power Corporation, the Municipal Electric Authority of Georgia, and the City of Dalton, Georgia. Southern Nuclear Operating Company (SNC) is the licensed operator of the nuclear facilities at the VEGP site, with control of the nuclear facilities, including complete authority to regulate any and all access and activity within the plant exclusion area boundary. GPC and SNC are subsidiaries of Southern Company.

VEGP Unit 3 is connected to the Units 1, 2 and 3, 230/500 kV switchyard at the 230 kV level. The 230 kV and 500 kV levels of the Units 1, 2 and 3, 230/500 kV switchyard are arranged in a breaker-and-a-half configuration and are interconnected through two, 230/500 kV autotransformers. VEGP Unit 4 is connected to the Unit 4, 500 kV switchyard. This switchyard is also arranged in a breaker-and-a-half configuration. The Unit 4, 500 kV switchyard is connected to the 500 kV section of the Units 1, 2 and 3, 230/500 kV switchyard by overhead lines. The Reserve Auxiliary Transformers (RATs) for Units 3 and 4 are supplied by two overhead lines from a 230 kV switching station (i.e., switchyard) with a ring bus configuration. A portion of Unit 3 RAT “A” supply line is underground between Unit 4 and Unit 3. Five, 230 kV and three, 500 kV transmission lines connect the VEGP high voltage switchyards to the remainder of the SBAA transmission grid.

8.1.2 Onsite Power System Description

The onsite power system is comprised of the main ac power system and the dc power system. The main ac power system is a non-Class 1E system. The dc power system consists of two independent systems: Class 1E dc system and non-Class 1E dc system. The ac and dc onsite power system configurations are shown on Figures 8.3.1-1 and 8.3.2-1, 8.3.2-2 and 8.3.2-3, respectively.

The normal ac power supply to the main ac power system is provided from the station main generator. When the main generator is not available, plant auxiliary power is provided from the switchyard by backfeeding through the main stepup and unit auxiliary transformers. This is the

preferred power supply. When neither the normal or the preferred power supply is available due to an electrical fault at either the main stepup transformer, unit auxiliary transformer, AC portion of the excitation system, isophase bus, or 6.9kv nonsegregated bus duct, fast bus transfer will be initiated to transfer the loads to the reserve auxiliary transformers powered by maintenance sources of power. In addition, two non-Class 1E onsite standby diesel generators supply power to selected loads in the event of loss of the normal, preferred, and maintenance power sources. The reserve auxiliary transformers also serve as a source of maintenance power. The maintenance sources are as described.

The main generator is connected to the offsite power system by three single-phase stepup transformers. The normal power source for the plant auxiliary ac loads comes from the generator bus through two unit auxiliary transformers of identical rating. In the event of a loss of the main generator, the power is maintained without interruption from the preferred power supply by an autotrip of the main generator breaker. Power then flows from the switchyard to the auxiliary loads through the main and unit auxiliary transformers.

A spare single-phase main stepup transformer is provided in the transformer area. The spare can be placed in service upon failure of one phase of the main stepup transformers.

The onsite standby power system, powered by the two onsite standby diesel generators, supplies power to selected loads in the event of loss of other ac power sources. Loads that are priority loads for investment protection due to their specific functions (permanent nonsafety loads) are selected for access to the onsite standby power supply. Availability of the standby power source is not required to accomplish any safety function.

The maintenance power supplies are provided at the medium voltage (6.9 kV) buses through normally open circuit breakers. Bus transfer to maintenance source either is automatic under fast bus transfer logic or may be initiated manually.

Four independent divisions of Class 1E 250 Vdc battery systems are provided for the Class 1E dc and UPS system. Divisions B and C have two battery banks; one battery bank is sized to supply power to safety-related loads for at least 24 hours and the other battery bank is sized to supply power to a second set of safety-related loads for at least 72 hours following a design basis event (including the loss of all ac power). Divisions A and D have one 24-hour battery bank. The loads are assigned to each battery bank, depending on their required function, during the 72 hour coping period so that no manual or automatic load shedding is required for the first 24 hours. Two ancillary diesel generators are provided for power for Class 1E post-accident monitoring, MCR lighting, MCR and I&C room ventilation, and power to refill the PCS water storage tank and spent fuel pool if no other sources of ac power are available.

An IDS spare battery bank (IDSS-DB-1A and IDSS-DB-1B) with a spare charger (IDSS-DC-1) is provided for the Class 1E battery system. In order to preserve independence of each Class 1E dc system division, plug-in locking type disconnects are permanently installed to prevent connection of more than one battery bank to the spare. In addition, kirk-key interlock switches are provided to prevent transfer operation of more than one switchboard at a time. The spare battery bank is located in a separate room and is capable of supplying power to the required loads on any battery being temporarily replaced with the spare.

The non-Class 1E 125 Vdc power system provides continuous, reliable power to the plant nonsafety-related dc loads. Operation of the non-Class 1E dc system is not required to accomplish any safety function.

Uninterruptible power supplies (UPS) to the four independent divisions of the Class 1E 120 Vac instrument buses are included in the Class 1E dc system. The normal power to the uninterruptible

power supply comes from the respective Class 1E 250 Vdc bus. The backup power comes from the main ac power system through Class 1E 480-208Y/120V voltage regulating transformers. The same configuration applies for the uninterruptible power to the non-divisional, non-Class 1E 120 Vac instrument buses. The normal power to the non-Class 1E uninterruptible power supply comes from the non-Class 1E 125 Vdc bus and the backup power comes from the main ac power system through a voltage regulating transformer.

8.1.3 Safety-Related Loads

The safety-related loads requiring Class 1E power are listed in Tables 8.3.2-1, 8.3.2-2, 8.3.2-3 and 8.3.2-4. Safety-related loads are powered from the Class 1E 250 Vdc batteries and the associated Class 1E 120 Vac instrument buses.

8.1.4 Design Basis

8.1.4.1 Offsite Power System

Offsite power has no safety-related function due to the passive design of the AP1000. Therefore, redundant offsite power supplies are not required. The design provides a reliable offsite power system that minimizes challenges to the passive safety system.

8.1.4.2 Onsite Power System

8.1.4.2.1 Safety Design Basis

- The Class 1E dc and UPS power system meets the single failure criterion (GDC 17).
- The Class 1E dc and UPS system has sufficient capacity to achieve and maintain safe shutdown of the plant for 72 hours following a complete loss of all ac power sources without requiring load shedding for the first 24 hours.
- The Class 1E dc and UPS system is divided into four independent divisions. Any three-out-of-four divisions can shut down the plant safely and maintain it in a safe shutdown condition.
- Separation criteria preserve the independence of redundant Class 1E circuits as described in Subsection 8.3.2.4 and no single credible event is capable of disabling redundant safety-related systems.
- Special identification criteria are applied for Class 1E equipment, cabling, and raceways as described in Subsection 8.3.2.3.
- The Class 1E systems and equipment are designed to permit periodic inspection and testing (GDC-18).
- The Class 1E dc and UPS power system permits connection of any one 250 Vdc switchboard at a time to the spare battery and the spare battery charger. The spare battery and charger have sufficient capacity to permit continuous plant operation at 100-percent power in case of a failure or unavailability of one Class 1E battery bank and the associated battery charger.
- Two ancillary diesel generators provide ac power for Class 1E post-accident monitoring, MCR lighting, MCR and I&C room ventilation, and power to refill the PCS water storage tank and spent fuel pool if no other sources of power are available. The equipment used to perform this function is not safety-related because it is not needed for a prolonged period following a loss of ac and it is easily replaced with transportable generators.

8.1.4.2.2 Power Generation Design Basis

- The main ac power system is a non-Class 1E system and nonsafety-related. The normal power supply to the main ac power system comes from the station main generator through two identically rated unit auxiliary transformers and an additional unit auxiliary transformer for the electric auxiliary boiler and as described site-specific loads.

- The onsite standby power system supplies ac power to the selected permanent nonsafety loads in the event of a main generator trip concurrent with the loss of preferred power source and maintenance power source when under fast bus transfer conditions. The onsite standby diesel generators are automatically connected to the associated 6.9 kV buses upon loss of bus voltage only after the generator rated voltage and frequency is established. Loads that are important for orderly plant shutdown are sequentially connected as shown in Subsection 8.3.1 during this event.

  The permanent nonsafety loads are not required for the plant safe shutdown; therefore, the onsite standby power system is a nonsafety-related system and non-Class 1E.

- For continued operation of the plant, a spare single-phase main transformer can be placed in service upon failure of one phase of the main stepup transformers.

8.1.4.3 Design Criteria, Regulatory Guides, and IEEE Standards

Refer to Table 8.1-1 for guidelines, and their applicability to Chapter 8.

The offsite and onsite ac power systems have no safety function and, therefore, their conformance to General Design Criteria, Regulatory Guides and IEEE Standards is not required, except as indicated in Table 8.1-1.

The Class 1E dc power system design is based on the following:

- General Design Criteria (GDC)

  See Section 3.1 for a discussion of conformance to the General Design Criterion.

- Nuclear Regulatory Commission (NRC) Regulatory Guides

  See Section 1.9 for the list and details of conformance to the regulatory guides.

- IEEE Standards.

  The Class 1E dc power system design is based on the following IEEE Standards that are generally acceptable to the NRC as stated in the referenced Regulatory Guides:

  – IEEE 308-1991, IEEE Standard Criteria for Class 1E Power Systems for Nuclear Power Generating Stations. Refer to Regulatory Guide 1.32.

  – IEEE 317-1983, IEEE Standard for Electrical Penetration Assemblies in Containment Structures for Nuclear Power Generating Stations. Refer to Regulatory Guide 1.63.

  – IEEE 323-1974, IEEE Standard for Qualifying Class 1E Equipment for Nuclear Power Generating Stations. Refer to Regulatory Guide 1.89.

- IEEE 338-1987, IEEE Standard Criteria for the Periodic Surveillance Testing of Nuclear Power Generating Station Safety Systems. Refer to Regulatory Guide 1.118.
- IEEE 344-1987, IEEE Recommended Practice for Seismic Qualification of Class 1E Equipment for Nuclear Power Generating Stations. Refer to Regulatory Guide 1.100.
- IEEE 379-2000, IEEE Standard Application of the Single Failure Criterion to Nuclear Power Generating Station Safety Systems. Refer to Regulatory Guide 1.53.
- IEEE 382-1996, IEEE Standard for Qualification of Actuators for Power Operated Valve Assemblies with Safety Related Functions for Nuclear Power Plants. Refer to Regulatory Guide 1.73.
- IEEE 383-1974, IEEE Standard for Type Test of Class 1E Electric Cables, Field Splices, and Connections for Nuclear Power Generating Stations. Refer to Regulatory Guide 1.131.
- IEEE 384-1981, IEEE Standard Criteria for Independence of Class 1E Equipment and Circuits. Refer to Regulatory Guide 1.75.
- IEEE 450-1995, IEEE Recommended Practice for Maintenance, Testing, and Replacement of Vented Lead-Acid Batteries for Stationary Applications. Refer to Regulatory Guide 1.32.
- IEEE 484-1996, IEEE Recommended Practice for Installation Design and Installation of Vented Lead-Acid Batteries for Stationary Applications. Refer to Regulatory Guide 1.128.
- IEEE 741-1997, IEEE Standard Criteria for the Protection of Class 1E Power Systems and Equipment in Nuclear Power Generating Stations. Refer to Regulatory Guide 1.63.
- IEEE 1202-1991, IEEE Standard for Flame Testing of Cables for Use in Cable Tray in Industrial and Commercial Occupancies.

8.1.5 Combined License Information

This section contained no requirement for information.

Table 8.1-1 (Sheet 1 of 5)
Criteria and Guidelines for Electric Power Systems

Criteria			Applicability ([a] Section/Subsection)			Remarks
			8.2	8.3.1	8.3.2	
1.	10CFR50 Appendix A – General Design Criteria (GDC) (See Section 3.1 for a discussion of conformance to each of the GDC).					
a.	GDC 2	Design Bases for Protection Against Natural Phenomena			A	
b.	GDC 4	Environmental and Missile Design Basis			A	
c.	GDC 5	Sharing of Structures, Systems, and Components				not applicable
d.	GDC 17	Electric Power Systems			A	
e.	GDC 18	Inspection and Testing of Electric Power Systems			A	
f.	GDC 50	Containment Design Basis		A	A	applicable to penetration design

Note:
(a) "A" denotes applicable to AP1000, and "G" denotes guidelines as defined in NUREG-0800, Rev. 2 (except for those guidelines that are site-specific, which are defined in NUREG-0800, Rev. 3), Table 8-1 (SRP). No letter denotes "Not Applicable."

Table 8.1-1 (Sheet 2 of 5)
Criteria and Guidelines for Electric Power Systems

Criteria	Applicability ([a] Section/Subsection)			Remarks
	8.2	8.3.1	8.3.2	
2. Regulatory Guide (See Section 1.9 for list and discussion of conformance to the Regulatory Guides).				
a. RG 1.6 Independence Between Redundant Standby (Onsite) Power Sources and Between Their Distribution Systems			G	
b. RG 1.9 Selection, Design, and Qualification of Diesel Generator Units Used as Stand-by (Onsite) Electric Power Systems at Nuclear Power Plants				not applicable
c. RG 1.32 Criteria for Safety-Related Electric Power Systems for Nuclear Power Generating Stations			G	
d. RG 1.47 Bypassed and Inoperable Status Indication for Nuclear Power Plant Safety Systems			G	
e. RG 1.63 Electric Penetration Assemblies in Containment Structures for Nuclear Power Plants		G	G	
f. RG 1.75 Physical Independence of Electric Systems			G	
g. RG 1.81 Shared Emergency and Shutdown Electric Systems for Multi-Unit Nuclear Power Plants				not applicable

Note:
(a) "A" denotes applicable to AP1000, and "G" denotes guidelines as defined in NUREG-0800, Rev. 2 (except for those guidelines that are site-specific, which are defined in NUREG-0800, Rev. 3), Table 8-1 (SRP). No letter denotes "Not Applicable."

Table 8.1-1 (Sheet 3 of 5)
Criteria and Guidelines for Electric Power Systems

Criteria			Applicability ([a] Section/Subsection)			Remarks
			8.2	8.3.1	8.3.2	
h.	RG 1.106	Thermal Overload Protection for Electric Motors on Motor-Operated Valves			G	
i.	RG 1.108	Periodic Testing of Diesel Generator Units Used as Onsite Electric Power Systems at Nuclear Power Plants				not applicable
j.	RG 1.118	Periodic Testing of Electric Power and Protection Systems			G	
k.	RG 1.128	Installation Design and Installation of Large Lead Storage Batteries for Nuclear Power Plants			G	
l.	RG 1.129	Maintenance, Testing, and Replacement of Vented Lead-Acid Storage Batteries for Nuclear Power Plants			G	site-specific Battery Service tests are performed in accordance with the Regulatory Guide.
m.	RG 1.131	Qualification Tests of Electric Cables, Field Splices, and Connections for Light-Water-Cooled Nuclear Power Plants			G	The insulating and jacketing material for electrical cables are selected to meet the fire and flame test requirements of IEEE Standard 1202 or IEEE Standard 383 excluding the option to use the alternate flame source, oil or burlap.
n.	RG 1.155	Station Blackout				Not applicable[b]
o.	RG 1.204	Guidelines for Lightning Protection of Nuclear Power Plants	G	G		Implemented via IEEE 665.
p.	RG 1.206	Combined License Applications for Nuclear Power Plants (LWR Edition)	G	G	G	

Note:
(a) "A" denotes applicable to AP1000, and "G" denotes guidelines as defined in NUREG-0800, Rev. 2 (except for those guidelines that are site-specific, which are defined in NUREG-0800, Rev. 3), Table 8-1 (SRP). No letter denotes "Not Applicable."
(b) Station Blackout and the associated guidelines are addressed as a design issue in Subsection 1.9.5.1.5.

Table 8.1-1 (Sheet 4 of 5)
Criteria and Guidelines for Electric Power Systems

Criteria			Applicability ([a] Section/Subsection)			Remarks
			8.2	8.3.1	8.3.2	
3.	Branch Technical Position (BTP)					
a.	BTP ICSB 4 (PSB)	Requirements on Motor-Operated Valves in the ECCS Accumulator Lines			G	see 1.9.2
b.	BTP ICSB 8 (PSB)	Use of Diesel-Generator Sets for Peaking				not applicable
c.	BTP 8-3 ICSB 11 (PSB)	Stability of Offsite Power Systems	G			site-specific Stability Analysis of the Offsite Power System is performed in accordance with the BTP.
d.	BTP ICSB 18 (PSB)	Application of the Single Failure Criterion to Manually Controlled Electrically-Operated Valves			G	see 1.9.2
e.	BTP ICSB 21	Guidance for Application of Regulatory Guide 1.47			G	see also 7.5
f.	BTP PSB 1	Adequacy of Station Electric Distribution System Voltages				not applicable
g.	BTP PSB 2	Criteria for Alarms and Indications Associated with Diesel-Generator Unit Bypassed and Inoperable Status				not applicable

Note:
(a) "A" denotes applicable to AP1000, and "G" denotes guidelines as defined in NUREG-0800, Rev. 2 (except for those guidelines that are site-specific, which are defined in NUREG-0800, Rev. 3), Table 8-1 (SRP). No letter denotes "Not Applicable."

Table 8.1-1 (Sheet 5 of 5)
Criteria and Guidelines for Electric Power Systems

Criteria	Applicability ([a] Section/Subsection)			Remarks
	8.2	8.3.1	8.3.2	
4. NUREG Reports				
a. NUREG CR0660 Enhancement of Onsite Diesel Generator Reliability				not applicable

Note:
(a) "A" denotes applicable to AP1000, and "G" denotes guidelines as defined in NUREG-0800, Rev. 2 (except for those guidelines that are site-specific, which are defined in NUREG-0800, Rev. 3), Table 8-1 (SRP). No letter denotes "Not Applicable."

Table 8.1-201
Not Used

8.2 Offsite Power System

8.2.1 System Description

The normal ac power supply to the main ac power system is provided from the main generator. When the main generator is not available, plant auxiliary power is provided from the switchyard by backfeeding through the main stepup and unit auxiliary transformers. This is the preferred power supply. When neither the normal or the preferred power supply is available due to an electrical fault at either the main stepup transformer, unit auxiliary transformer, AC portion of the excitation system, isophase bus, or 6.9kv nonsegregated bus duct, fast bus transfer will be automatically initiated to transfer the loads to the reserve auxiliary transformers powered by maintenance sources of power. In addition, two non-Class 1E onsite standby diesel generators supply power to selected plant loads in the event of loss of the normal, preferred, and maintenance power sources. The reserve auxiliary transformers also serve as a source of maintenance power.

Maintenance power is provided at the medium voltage level (6.9 kV) through normally open circuit breakers. Bus transfer to the maintenance source is automatic under fast bus transfer logic or may be initiated manually.

The Southern Balancing Authority Area (SBAA) transmission grid supplies the off-site AC power (preferred and maintenance power) for Vogtle Electric Generating Plant (VEGP) Units 3 and 4 via three, high voltage switchyards located north of the facility. The three, high voltage switchyards are defined as follows:

- Units 1, 2 and 3, 230/500 kV switchyard
- Unit 4, 500 kV switchyard
- Units 3 and 4, Reserve Auxiliary Transformer (RAT) supply, 230 kV switching station

The interconnection of the three switchyards, and the 230 kV and 500 kV transmission lines are shown on Figures 8.2-201 and 8.2-202.

VEGP Units 3 and 4 are connected into a transmission grid supplying large load centers. Unit 3 is tied into the 230 kV transmission grid via the Units 1, 2 and 3, 230/500 kV switchyard. Unit 4 is tied into the 500 kV transmission grid via the Unit 4, 500 kV switchyard.

The Units 3 and 4, RAT supply, 230 kV switching station, consists of 5 breakers installed in a ring bus configuration. The Augusta Newsprint transmission line and the Units 1, 2 and 3, 230/500 kV switchyard are connected to the Units 3 and 4, RAT supply, 230kV switching station.

230 kV Overhead Transmission Lines

Five, 230 kV overhead transmission lines connect the Units 1, 2 and 3, 230/500 kV switchyard to other substations throughout the transmission grid. Each 230 kV transmission line is connected to a Georgia Integrated Transmission System or a South Carolina Electric and Gas (SCEG) substation. The five, 230 kV transmission lines originate at the VEGP switchyards and connect to various substations as shown below.

230 kV Line	Termination Point	Length (miles)	Thermal Rating (MVA)
Switching Station/Augusta Newsprint	Augusta Newsprint Sub	20	596
Goshen White	Goshen Sub	19	866
Augusta Corporate Park	Augusta Corporate Park Sub	14	866

230 kV Line	Termination Point	Length (miles)	Thermal Rating (MVA)
SCEG	Savannah River Plant Sub	22	1020
Plant Wilson	Plant Wilson Sub	1	718

The Switching Station/Augusta Newsprint, Goshen White and Augusta Corporate Park 230 kV lines are on a common right-of-way for the first 14.19 miles from the plant. The lines exit the north side of the switchyard and leave the plant site to the northwest. Approximately 0.5 miles from the plant, the Units 3 and 4, RAT supply, 230 kV switching station is installed along the Switching Station/Augusta Newsprint transmission line.

The SCEG 230 kV line exits the north side of the switchyard, crosses the Savannah River and continues to the Savannah River Plant Substation in South Carolina.

The 230 kV transmission line from the Unit 3 generator to the Units 1, 2 and 3, 230/500 kV switchyard travels under these four transmission lines. All high voltage equipment and conductors are designed to meet the requirements of the National Electrical Safety Code (NESC) and Georgia Power Company (GPC) engineering standards. Electrical clearances phase-to-phase and phase-to-ground are determined by NESC and engineering requirements.

The Plant Wilson 230 kV line exits the north side of the switchyard traveling southeast to the Wilson switchyard less than 1 mile away.

500 kV Overhead Transmission Lines

Three 500 kV overhead transmission lines connect the Units 1, 2 and 3, 230/500 kV switchyard and the Unit 4, 500 kV switchyard to other substations throughout the SBAA transmission grid. Each 500 kV transmission line is connected to a Georgia Integrated Transmission System substation. The three, 500 kV transmission lines originate at the VEGP switchyards and connect to various substations as shown below.

500kV Line	Termination Point	Length (miles)	Thermal Rating (MVA)
West McIntosh	West McIntosh Sub	69	2439
Warthen	Warthen Sub	154	2701
Thomson	Thomson Sub	52	2701

The Thomson 500 kV line exits the switchyard to the north and crosses over the 230 kV transmission line from the Unit 3 generator and then west over the 230 kV transmission lines to the Units 3 and 4 RATs. All high voltage equipment and conductors are designed to meet the requirements of the National Electrical Safety Code (NESC) and GPC engineering standards. After leaving the plant, the Thomson and Warthen 500 kV lines are on a common right-of-way for approximately the first 5 miles. The lines exit the north side of the switchyard and leave the plant site to the west.

The West McIntosh 500 kV line exits the north side of the switchyard and leaves the plant site traveling to the west before changing direction to the southeast.

All transmission lines connected to the VEGP switchyards are suspended from steel, lattice-type towers designed to provide clearances consistent with NESC and GPC engineering standards. Electrical clearances phase-to-ground are determined by NESC and engineering requirements, but are not less than 27 feet for 230 kV transmission lines and 32 feet for 500 kV transmission lines. Transmission towers include overhead ground wires. All towers are grounded with either ground rods or a counterpoise system.

A transformer area containing the generator step-up transformers (GSU), the unit auxiliary transformers (UATs), and reserve auxiliary transformers (RATs) is located next to each turbine building.

The main generator is connected to the offsite power system via three single-phase main stepup transformers. The normal power source for the plant auxiliary ac loads is provided from the isophase generator bus through the two unit auxiliary transformers of identical ratings. In the event of a loss of the main generator, the power is maintained without interruption from the preferred power supply by an auto-trip of the main generator breaker. Power then flows from the transformer area to the auxiliary loads through the main and unit auxiliary transformers.

The transmission line structures associated with the plant are designed to withstand standard loading conditions for the specific-site as provided in Reference 1.

Automatic load dispatch is not used at the plant and does not interface with safety-related action required of the reactor protection system.

8.2.1.1 Transmission Switchyard

A 230 kV air insulated switching station, installed along the Switching Station/Augusta Newsprint transmission line, supplies power to the Units 3 and 4 RATs and the retail power supply. The switching station is located approximately 3500 feet to the north of Units 3 and 4. This arrangement provides the power supply to the RATs from the Units 1, 2 and 3, 230/500 kV switchyard or directly from the Augusta Newsprint transmission line. The switching station also provides power to the 13.8 kV retail power supply. Two overhead transmission lines connect the Units 3 and 4, RAT supply, 230 kV switching station to the two RATs for Unit 3 and the two RATs for Unit 4. One overhead transmission line supplies RAT “A” for Units 3 and 4 and the other overhead transmission line supplies RAT “B” for Units 3 and 4. A portion of Unit 3 RAT “A” supply line is underground between Unit 4 and Unit 3. The RATs may be used to distribute power for plant auxiliaries when the GSUs or UATs are out of service. The Units 1, 2 and 3, 230/500 kV switchyard is used to transmit electrical power output from Unit 3 to the SBAA transmission grid. The 230 kV section of the switchyard is interconnected to the 500 kV section through two, 230/500 kV autotransformers.

A 500 kV air insulated switchyard is located 500 feet north of Unit 4 and 1500 feet to the west of the Units 1, 2 and 3, 230/500 kV switchyard. The Unit 4, 500kV switchyard is interconnected to the 500 kV section of the Units 1, 2 and 3, 230/500 kV switchyard by two overhead lines. These two lines cross over the 230 kV lines for the Unit 3 generator and the supply line for the Units 3 and 4 RAT “B”. The Unit 4, 500 kV switchyard is used to transmit electrical power output from Unit 4 to the SBAA transmission grid.

The Unit 3 generator is connected to the Units 1, 2 and 3, 230/500 kV switchyard by overhead tie lines that exit the north side of the switchyard and travel west, and then south to the GSU. The Unit 4 generator is connected to the Unit 4, 500kV switchyard by overhead tie lines that exit the south side of the switchyard and travel south to the GSU.

The high voltage circuit breakers in all three switchyards are sized with sufficient continuous current carrying capacity and fault interrupting capability to perform their intended function. The switchyard disconnect switches are rated equal to or greater than the continuous current basis of their associated circuit breakers. The Units 1, 2 and 3, 230/500 kV switchyard, the Unit 4, 500 kV switchyard and the Units 3 and 4, RAT supply, 230 kV switching station are shown on the offsite power system one-line diagram and the switchyard general arrangement, Figures 8.2-201 and 8.2-202 respectively.

Failure Analysis

The design of the offsite power system provides for a robust system that supports reliable power production. Offsite power is not required to meet any safety function, and physical independence is not necessary. The certified design has been granted a partial exemption to GDC 17 by the NRC. Multiple, reliable transmission circuits are provided to support operation of the facility. Neither the accident analysis nor the Probabilistic Risk Assessment has identified the non-safety related offsite power system as risk significant for normal plant operation.

VEGP Units 3 and 4 are supplied with off-site power from the SBAA 230 kV and 500 kV transmission grid via two separate switchyard buses and backfed through the GSUs. The VEGP switchyards are connected to eight transmission lines. No single transmission line is designated as the preferred circuit, but analysis shows that with any one of these transmission lines out of service, the transmission grid can supply the switchyard with sufficient power for the safety related systems and other auxiliary loads for normal, abnormal and accident conditions on Units 3 and 4.

For the portions of the switchyards associated with VEGP Units 3 and 4, a failure modes and effects analysis (FMEA) confirmed that a single initiating event, such as a transmission line fault, plus a single breaker not operating, does not cause failure of more than one single transmission line, or a loss of offsite power to either Unit 3 or 4 via the GSU. This evaluation recognizes that a single failure of some switchyard components could directly cause the loss of the switchyard feed to the GSU, such as a fault on this feed. Evaluated events include a breaker not operating during a fault condition; a fault on a switchyard bus; a spurious relay trip; and a loss of control power supply. In summary:

- In the event of a fault on a 230 kV or 500 kV transmission line, the associated line breakers trip and both buses stay energized and both units continue operation.
- In the event of a fault on a 230 kV or 500 kV transmission line concurrent with a stuck bus breaker, the affected bus differential relays cause circuit breakers on the affected bus to trip and thereby isolate the affected bus. Both units continue operation through the non-affected bus.
- In the event of a 230 kV or 500 kV bus fault, bus differential relays sense the fault and the breakers associated with the affected bus trip, thereby isolating the faulted bus. In this event, both units continue normal operation through the non-affected bus.
- In the event of a 230 kV or 500 kV bus fault concurrent with a stuck breaker, the adjacent breaker senses the fault and trips, which isolates the faulted bus. If the stuck breaker is associated with the output of either the Unit 3 or Unit 4 GSU, opening of the adjacent breaker interrupts power to the associated GSU and UATs resulting in a reactor trip. The unaffected unit continues operation through the non-affected bus.
- In the event of transmission line relay mis-operation, both associated switchyard breakers trip, isolating one of the transmission lines from the yard. In this event, both switchyard buses stay energized and both units continue normal operation.
- In the case of a loss of DC control power, the loss of control power to a breaker or to a transmission line primary relay is compensated for by redundant trip coils powered from a different source which allows the protective function to occur. Both units continue normal operation.

- In the event of a fault on either the 230 kV Switching Station or Augusta Newsprint line concurrent with a stuck breaker, power will be lost to either the Units 3 and 4 RAT “A” or Units 3 and 4 RAT “B” by tripping the adjacent circuit breaker with the stuck breaker relay protection schemes. In this event, both units continue normal operation and the maintenance power supply to the “A” or “B” RATs will be lost.

The results of the analysis show that a single fault in any section of one 230 kV or 500 kV bus is cleared by the adjacent breakers and does not interrupt operation of the remaining switchyard bus or the connection of the unaffected transmission lines. A bus fault with a stuck breaker associated with the output of either the Unit 3 or Unit 4 GSU causes the loss of power to, and a reactor trip in the associated unit. A bus fault concurrent with any other stuck breaker does not cause a loss of power to either unit.

An analysis was performed of transmission line crossings within the area of the Vogtle site. Sixteen line crossings were evaluated to demonstrate that offsite power would be available to both Unit 3 and Unit 4 from at least one of the three available offsite power supplies to each unit. A nonmechanistic failure was assumed for each of the 16 transmission lines (a line is considered to be any one of the three phases) allowing it to fall on the line or lines immediately below it. In three cases, the falling line was assumed to contact two lines below. In all, 13 separate cases of falling transmission lines were evaluated. No single failures of protective relaying or breakers were assumed in this evaluation. The evaluation demonstrated that, in each case, at least one offsite power supply remained available to both Unit 3 and Unit 4.

Transmission System Operator (TSO)

Southern Company Transmission (SCT) is the TSO within the SBAA and is responsible for the safe and reliable operation of the SBAA transmission grid. The SBAA is located within the SERC Reliability Corporation, one of the regional corporations within the North American Electric Reliability Corporation (NERC). SCT has responsibility for Transmission Planning and Operation of the bulk power transmission system. The Operation is performed by the Georgia Control Center (GCC) in Atlanta, Georgia and Bulk Power Operations (BPO) organization. The BPO control center is also known as the Power Coordination Center (PCC) and is located in Birmingham, Alabama.

SCT and VEGP have an agreement and protocols in place to provide safe and reliable operation of the transmission grid and equipment at VEGP Units 3 and 4. Elements of this agreement are implemented in accordance with the procedures of both parties.

The TSO establishes a voltage schedule for the 230 kV and 500 kV switchyards. VEGP Units 3 and 4, while generating, are expected to supply or absorb reactive power to help regulate voltage in the 230 kV and 500 kV switchyards in accordance with TSO voltage schedule criteria. VEGP maintains switchyard voltage such that steady state voltage on the 26 kV generator terminals is within 0.95 – 1.05 per unit (p.u.) of its nominal value.

VEGP provides the TSO with a nuclear plant interface agreement that specifies the detailed voltage and other requirements necessary to ensure safe and reliable operation of VEGP. The minimum and maximum switchyard voltage at VEGP is maintained in accordance with this interface agreement. These voltage levels are maintained without any reactive power support from VEGP Units 3 and 4.

The agreement between VEGP and SCT demonstrates protocols in place for the plant to remain cognizant of grid vulnerabilities so that they can make informed decisions regarding maintenance activities critical to the electrical system. As part of its operational responsibilities, the PCC continuously monitors real-time power flows and assesses contingency impacts through the use of a state-estimator tool. The PCC/GCC continuously monitors and evaluates grid reliability and switchyard voltages, and informs plant operations of any potential grid instability or voltage inadequacies. They also work to maintain local voltage requirements as required by VEGP

Operational planning studies are also performed using offline power flow study tools to assess near term operating conditions under varying load, generation, and transmission topology patterns. If a condition arises where the SBAA transmission grid cannot supply adequate offsite power, plant operators are notified and appropriate actions are taken.

VEGP plant operations reviews input from the GCC/PCC to make informed decisions regarding plant activities that may affect plant reliability or impacts to the transmission grid. In addition, plant operators inform the PCC/GCC of changes in generation ramp rates and notify them of any developing problems that may impact generation.

An agreement between VEGP and SCT sets the requirements for transmission grid studies and analyses. These analyses demonstrate the capability of the offsite power system to support plant start up and shutdown.

SCT conducts planning studies of the transmission grid on an ongoing basis. Model data used to perform simulation studies of projected future conditions is maintained and updated as load forecasts and future generation/transmission changes evolve. Studies are updated periodically to assess future system performance in accordance with NERC Reliability Standards. These studies form a basis for identifying future transmission expansion needs.

8.2.1.2 Transformer Area

The transformer area contains the main stepup transformers, the unit auxiliary transformers, and the reserve auxiliary transformers. Protective relaying and metering required for this equipment is located in the turbine building. The necessary power sources (480 Vac, 120 Vac, and 125 Vdc) to the equipment are supplied from the turbine building. See Subsection 9.5.1 for a discussion of fire protection associated with plant transformers.

The transformer area for each unit contains the main stepup transformer (the GSU), (3 single phase transformers plus one spare), three unit auxiliary transformers (the UATs), and two reserve auxiliary transformers (the RATs). The two RATs are connected to the Units 3 and 4 RAT supply 230 kV switching station via overhead tie lines, with a portion of Unit 3 RAT “A” supply line being underground between Unit 4 and Unit 3. The secondary windings (230 kV side) of the Unit 3 GSU are connected in a wye configuration and connected to the Units 1, 2 and 3, 230/500 kV switchyard. The secondary windings (500 kV side) of the Unit 4 GSU are connected in a wye configuration and connected to the Unit 4, 500 kV switchyard.

One feeder connects the transformer area with the switchyard to supply power to/from the main stepup transformers for the unit. An arrangement is shown in Figure 8.3.1-1.

Each transformer is connected to the switchyard by an offsite circuit beginning at the switchyard side of the breaker(s) within the switchyard and ending at the high voltage terminals of the GSU and RATs.

8.2.1.2.1 Switchyard Protection Relay Scheme

The switchyards are designed to provide high speed fault clearing while also maintaining high reliability and operational flexibility. The arrangement of the switchyards allow for isolation of components and buses, while preserving VEGP’s connection to the grid.

Under normal operating conditions all 230 kV and 500 kV circuit breakers (with the exception of the 500 kV breakers for the switchyard line reactors) and all bus sectionalizing motor operated disconnect switches are closed and all bus sections are energized.

Each 230 kV and 500 kV transmission line is protected by two independent protection schemes (primary and secondary) to achieve high speed clearing for a fault anywhere on the line and to provide remote back-up protection for remote faults. Each scheme has a pilot protection package and a stand alone step distance line protection package. The breaker failure scheme is initiated by either of the primary or secondary protection schemes and operates through a timing relay, and should a breaker fail to trip within the time setting of its timing relay, the associated breaker failure trip relay will trip and lock out all necessary breakers to isolate the faulted area.

The protective devices controlling the switchyard breakers are set with consideration given to preserving the plant grid connection following a turbine trip.

8.2.1.3 Switchyard Control Building

A separate control building is provided to serve the requirements of each of the three high voltage switchyards. Each control building houses switchyard batteries (redundant battery systems are housed in separate battery rooms and appropriately ventilated) and accommodates a sufficient number of relay/control panels.

The 230 kV and 500 kV switchyard breakers associated with the GSU are under the functional control of the plant, and the 230 kV breakers associated with the RATs are under the control of the GCC. Transmission line circuit breakers and switches in the switchyards are under the control of the GCC. The 230 kV and 500 kV disconnect switches associated with the GSU and RATs are under the control of the plant. All plant switchyard switching is coordinated between the GCC and the VEGP control room operators.

8.2.1.4 Switchyard and Transmission Lines Testing and Inspection

An agreement between VEGP and SCT for development, maintenance, calibration, testing and modification of transmission lines, switchyards, transformer yards and associated transmission equipment, provides the procedure, policy and organization to carry out maintenance, calibration, testing and inspection of transmission lines and switchyards.

This agreement defines the interfaces and working relationship between VEGP and SCT. As a service to VEGP, SCT performs maintenance, calibration, and testing of VEGP transformer assets at Southern Company nuclear sites. VEGP and SCT are responsible for control of plant/grid interface activities. For reliability, VEGP and SCT coordinate maintenance and testing of off-site power systems. SCT and GPC establish communication and coordination protocols for restoration of external power supply to the nuclear plant on a priority basis.

For performance of maintenance, testing, calibration and inspection, SCT follows its own field test manuals, vendor manuals and drawings, and industry maintenance practices to comply with applicable NERC Reliability Standards.

SCT verifies that these test results demonstrate compliance with design requirements and takes corrective actions as necessary. SCT plans and schedules maintenance activities, notifying the plant and PCC/GCC in advance. SCT also procures and stores necessary spare parts prior to the commencement of inspection, testing, and maintenance activities.

Transmission lines are currently inspected through aerial inspection. Inspections focus on conductor, hardware and structure condition assessment, with some having a specific focus on right of way encroachments and vegetation management. An integrated vegetation management program, consisting of periodic mechanical mowing or hand clearing, and herbicide application, is used to control vegetation within the boundaries of the transmission line rights of way. Patrols to identify and

remove danger trees beyond the formal right-of-way, which could adversely affect the operation of the transmission line, are performed twice per year.

In addition to the aerial patrols, each transmission line structure is inspected every six years by ground crew personnel. These crews perform an in-depth, on-site assessment of the structure, conductor, and hardware. Any maintenance work required is noted and scheduled for a follow-up crew if the inspection crew cannot complete the task while on-site.

The interconnecting switchyard, as well as other substation facilities, has multiple levels of inspection and maintenance, including the following:

- Walk throughs and visual inspections of the entire substation facility.
- Relay functional tests.
- Oil sampling of large power transformers. Oil samples are evaluated through the use of gas chromatography and dielectric breakdown analysis.
- Power circuit breakers are subjected to several levels of inspection and maintenance. The frequency of each is a function of the number of operations and the length of time in service. Maintenance leverages the use of external visual inspection of all functional systems, an external test, and an internal inspection. Frequency of the various maintenance/inspection efforts is based on a combination of operating history of the type of breaker, industry practice and manufacturer's recommended maintenance requirements.
- A power factor test (Doble Test) is typically performed on oil filled equipment.
- Thermography is used to identify potential thermal heating issues on buses, conductors, connectors and switches.

8.2.2 Grid Stability

The AP1000 is designed with passive safety-related systems for core cooling and containment integrity and, therefore, does not depend on the electric power grid for safe operation. This feature of the AP1000 significantly reduces the importance of the grid connection and the requirement for grid stability. The AP1000 safety analyses assume that the reactor coolant pumps can receive power from either the main generator or the grid for a minimum of 3 seconds following a turbine trip.

The AP1000 main generator is connected to the generator bus through the generator circuit breaker. The grid is connected to the generator bus through the main step-up transformers and the grid breakers. The reactor coolant pumps are connected to the generator bus through the reactor coolant pump breakers, the 6.9 kV switchgear, and the unit auxiliary transformers. During normal plant operation the main generator supplies power to the generator bus. Some of this power is used by the plant auxiliary systems (including the reactor coolant pumps); the rest of the power is supplied to the grid.

If, during power operation of the plant, a turbine trip occurs, the motive power (steam) to the turbine will be removed. The generator will attempt to keep the shaft rotating at synchronous speed (governed by the grid frequency) by acting like a synchronous motor. The reverse-power relay monitoring generator power will sense this condition and, after a time delay of at least 15 seconds, open the generator breaker. During this delay time the generator will be able to provide voltage support to the grid if needed. The reactor coolant pumps will receive power from the grid for at least 3 seconds following the turbine trip. A grid stability analysis to show that, with no electrical system failures, the grid will remain stable and the reactor coolant pump bus voltage will remain above the

voltage required to maintain the flow assumed in the Chapter 15 analyses for a minimum of 3 seconds following a turbine trip is as addressed in Subsection 8.2.5. In the Chapter 15 analyses, if the initiating event is an electrical system failure (such as failure of the isophase bus), the analyses do not assume operation of the reactor coolant pumps following the turbine trip. The responsibility for setting the protective devices controlling the switchyard breakers with consideration given to preserving the plant grid connection following a turbine trip is discussed in Subsection 8.2.5.

If the turbine trip occurs when the grid is not connected (generator supplying plant house loads only), the main turbine-generator shaft will begin to slow down as the energy stored in the rotational inertia of the shaft is used to supply the house loads (including reactor coolant pumps). The system will coast down until the generator exciter can no longer maintain generator terminal voltage and the generator breaker is tripped on either generator under-voltage or exciter over-current. This coast down will last at least 3 seconds before the generator breaker trips.

The sequence of events following a loss-of-offsite-power event is the same as those described for grid-disconnected operation.

SCT Transmission Planning has performed a transmission system study of the offsite power system. In order to maintain Reactor Coolant Pump (RCP) operation for three seconds following a turbine trip as specified in Subsection 8.2.2, the grid voltage at the high-side of the GSU, and RATs cannot dip more than 0.15 p.u. from the pre-trip steady-state voltage.

The study analyzes transient stability utilizing an appropriate load flow case while considering various fault contingencies. In order to complete the forward looking study, the following assumptions are made:

- Grid voltage is 235 kV and 517 kV
- Unit 3 GSU voltage ratio 230/26 kV with a 1.05 p.u. tap setting
- Unit 4 GSU voltage ratio 525/26 kV with a 1.0 p.u. tap setting
- The 2015 summer off-peak case was used as a starting point for the study. The SBAA load was scaled down to a valley load condition of ~38% of peak and the generation was re-dispatched. Valley load conditions provide the most conservative stability results for nuclear units.

The computer analysis was performed using the Siemens Power Technology International Software PSS/E. The analysis examines two conditions:

- Normal Running
- Turbine Trip

Other conditions (i.e. startup and normal shutdown) are bounded by these analyses.

Table 8.2-201 confirms that the interface requirements for steady state load, inrush kVA for motors, nominal voltage, allowable voltage regulation, nominal frequency, allowable frequency fluctuation, maximum frequency decay rate, and limiting under frequency value for RCP have been met.

In addition to turbine trip, the grid stability analysis also considered normally-cleared three-phase faults on the transmission system and three-phase faults followed by breaker failure at the VEGP 500 kV and 230 kV switchyards. A 500 kV line out for maintenance with a normally cleared fault on another 500 kV line was also studied. The results demonstrate that the grid remains stable for the

loss of the most critical transmission line, the loss of the largest load, and the loss of the largest generating unit. For these contingencies, the generator bus voltages and switchyard voltages (after fault clearing) remain within acceptable steady state voltage limits.

From January 1, 1992 to November 30, 2007, the average grid availability for the two transmission voltages is as follows:

500 kV Transmission Voltage: The West McIntosh and Warthen 500 kV transmission lines for VEGP have an availability of 99.9% with 25 forced outages. The 500 kV Thomson transmission line is not in service during this time period. The average frequency of forced line outages since 1992 is less than two per year. The leading cause of forced outages of significant duration is lightning and the resulting damage. Other failures of significant line outage duration are substation equipment problems and storms not associated with lightning.

230 kV Transmission Voltage: The five 230 kV transmission lines for VEGP have an availability of 99.6% with 26 forced outages. The average frequency of forced line outages since 1992 is less than two per year. The leading cause of forced outages of significant duration is a line structure failure (which only occurred once). Other failures of significant line outage duration are substation equipment problems.

8.2.3 Conformance to Criteria

The offsite sources are not Class 1E. Commercial equipment is manufactured to the industrial standards listed in Subsection 8.2.6. The design meets General Design Criterion 1. Unit trips occur at the generator breaker and do not cause the loss of the preferred power source to the plant electrical systems. The AP1000 does not require ac power sources for mitigating design basis events; Chapter 15.0 describes the design bases assumptions utilized for analysis of these events.

The AP1000 plant design supports an exemption to the requirement of GDC 17 for two physically independent offsite circuits by providing safety-related passive systems for core cooling and containment integrity, and multiple nonsafety-related onsite and offsite electric power sources for other functions. See Section 6.3 for additional information on the systems for core cooling.

A reliable dc power source supplied by batteries provides power for the safety-related valves and instrumentation during transient and accident conditions.

The Class 1E dc and UPS system is the only safety-related power source required to monitor and actuate the safety-related passive systems. Otherwise, the plant is designed to maintain core cooling and containment integrity, independent of nonsafety-related ac power sources indefinitely. The only electric power source necessary to accomplish these safety-related functions is the Class 1E dc and UPS power system which includes the associated safety-related 120V ac distribution switchgear.

Although the AP1000 is designed with reliable nonsafety-related offsite and onsite ac power that are normally expected to be available for important plant functions, nonsafety-related ac power is not relied upon to maintain the core cooling or containment integrity.

The nonsafety-related ac power system is designed such that plant auxiliaries can be powered from the grid under all modes of operation. During loss of offsite power, the ac power is supplied by the onsite standby diesel-generators. Preassigned loads and equipment are automatically loaded on the diesel-generators in a predetermined sequence. Additional loads can be manually added as required. The onsite standby power system is not required for safe shutdown of the plant.

Conformance with General Design Criterion 18 is provided by the test and inspection capability of the system.

8.2.4 Standards and Guides

In addition to the General Design Criteria, the industry guides and standards listed as Reference 2 through 4 are used as guides in the design and procurement of the offsite power system.

8.2.5 Combined License Information for Offsite Electrical Power

The design of the ac power transmission system and its testing and inspection plan is addressed in Subsections 8.2.1, 8.2.1.1, 8.2.1.2, 8.2.1.3, and 8.2.1.4.

The technical interfaces for ac power requirements from offsite and the analysis of the offsite transmission system and the setting of protective devices are addressed in Subsections 8.2.1.2.1 and 8.2.2.

8.2.6 References

1. ANSI C2-1997, “National Electrical Safety Code.”

2. ANSI C37.010-1999, “IEEE Application Guide for AC High-Voltage Circuit Breakers Rated on a Symmetrical Current Basis.”

3. ANSI C37.90-1989, “IEEE Standard for Relays and Relay Systems Associated with Electric Power Apparatus.”

4. ANSI C57.12.00-2000, “IEEE Standard General Requirements for Liquid-Immersed Distribution, Power and Regulating Transformers.”

Table 8.2-201
Grid Stability Interface Evaluation

Table 1.8-1 Item 8.2 Parameter	Westinghouse Offsite AC Requirement	VEGP 3 & 4 Value Assumed
Steady-state load	"normal running values provided as input to grid stability"	(78.2 + j 41.7) MVA
Inrush kVA for motors	56,712 kVA*	56,712 kVA @ locked rotor power factor (lrpf) = 0.15 pu
Nominal voltage	Not provided	1.03 pu (517 kV) 1.02 pu (235 kV)
Allowable voltage regulation	0.95–1.05 pu steady state 0.15 pu transient dip**	0.95–1.05 pu steady state 0.15 pu transient dip**
Nominal frequency	60 Hz	60 Hz
Allowable frequency fluctuation	± 1/2 Hz indefinite	± 1/2 Hz indefinite
Maximum frequency decay rate	5 Hz/sec	5 Hz/sec

*Based on the inrush of a single 10,000 HP feedwater pump assuming efficiency = 0.95, pf = 0.9, and inrush = 6.5 x FLA

** Applicable to Turbine Trip Only. The maximum allowable voltage dip from the pre-event steady state voltage value during the 3 second turbine trip event transient as measured at the point of connection to the high side of the generator step-up transformer and the reserve auxiliary transformer.

Table 1.8-1 Item 8.2 Parameter	Westinghouse Offsite AC Requirement	VEGP 3 & 4 Value Calculated
Limiting under frequency value for RCP	≥ 57.7 Hz	> 59.85 Hz

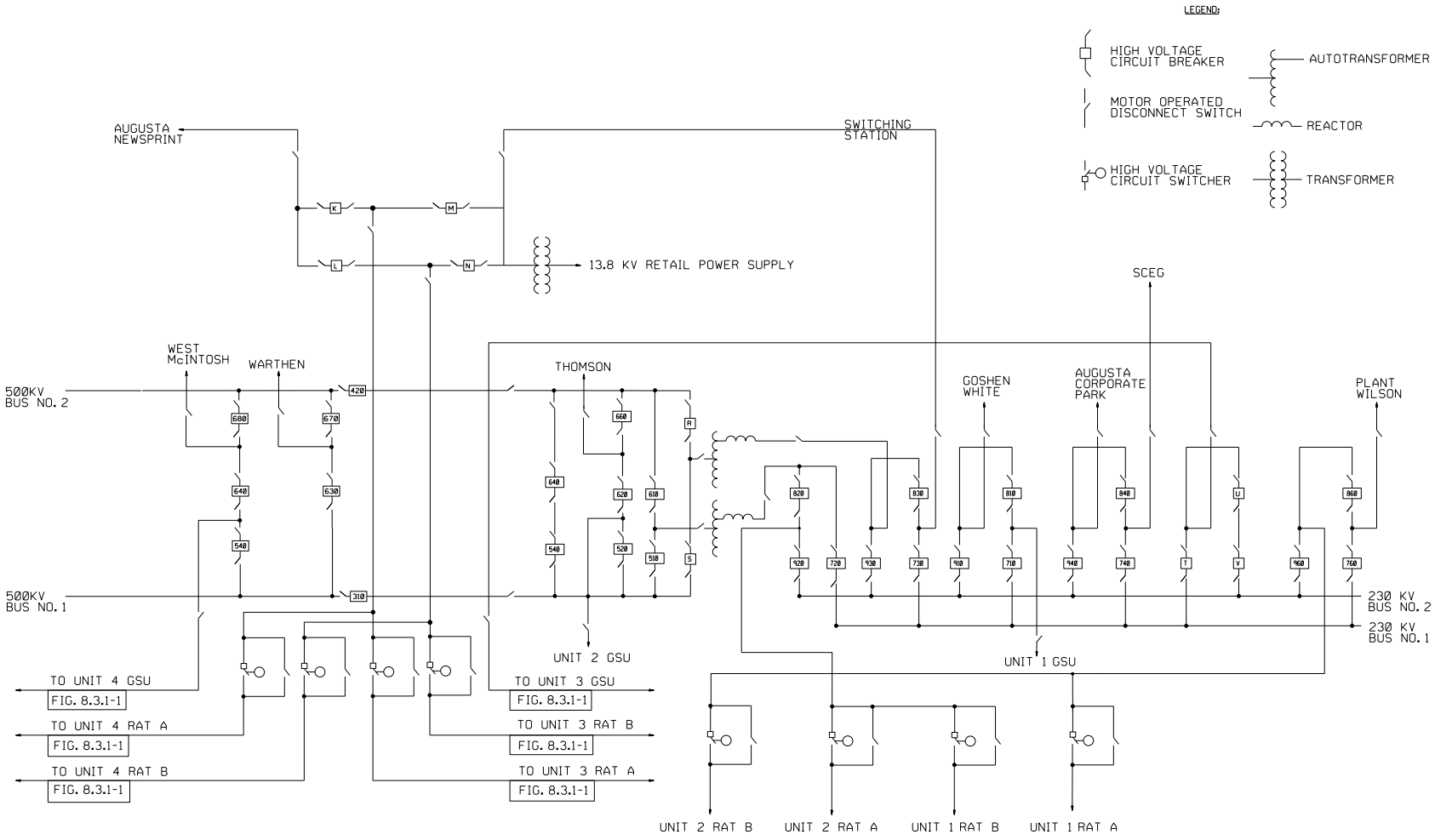

Figure 8.2-201
Offsite Power System One-Line Diagram

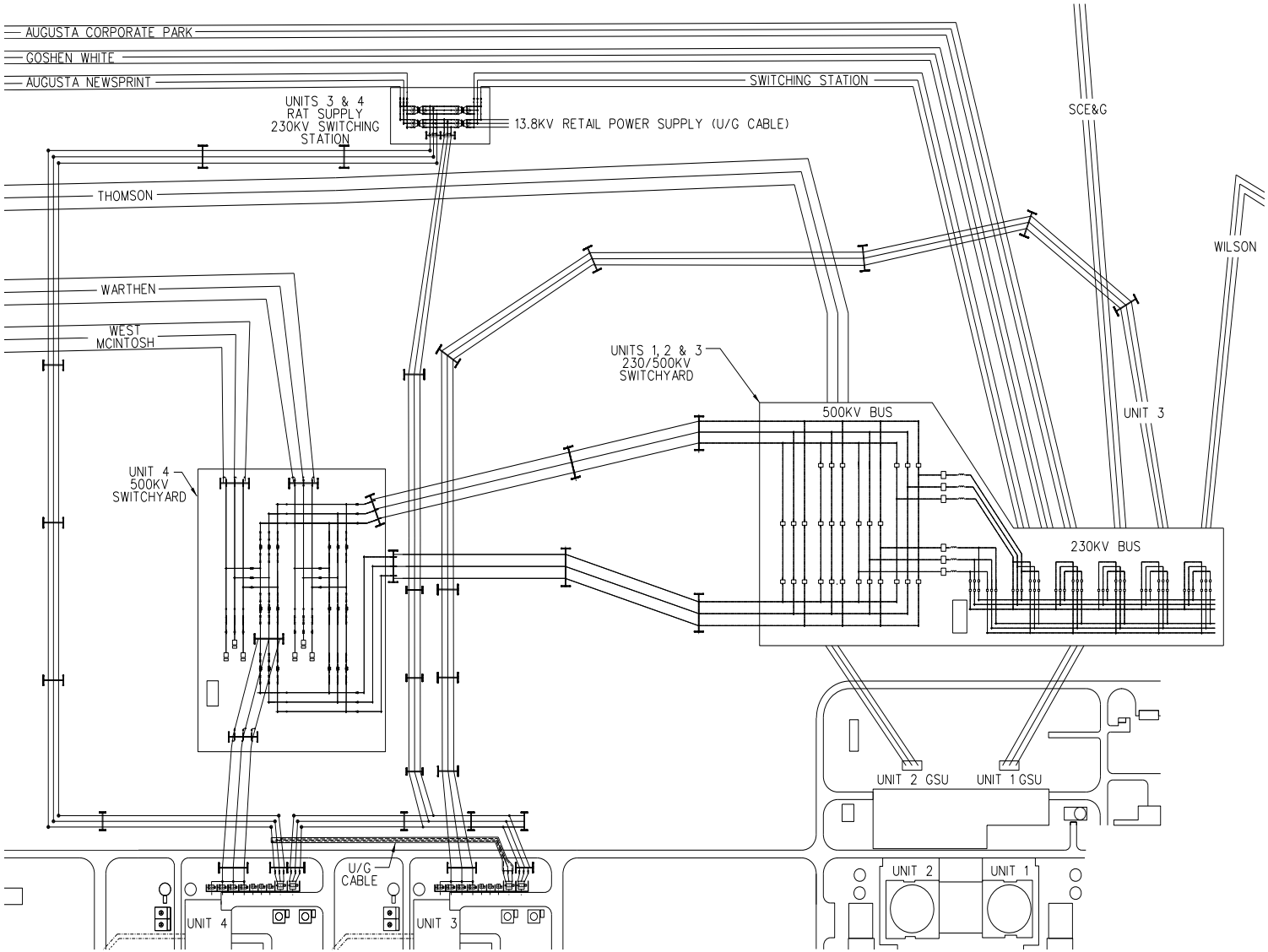

Figure 8.2-202
Switchyard General Arrangement

8.3 Onsite Power Systems

8.3.1 AC Power Systems

8.3.1.1 Description

The onsite ac power system is a non-Class 1E system comprised of a normal, preferred, maintenance and standby power supplies. The normal, preferred, and maintenance power supplies are included in the main ac power system. The standby power is included in the onsite standby power system. The Class 1E and non-Class 1E 208/120 Vac instrumentation power supplies are described in Subsection 8.3.2 as a part of uninterruptible power supply in the dc power systems.

8.3.1.1.1 Onsite AC Power System

The main ac power system is a non-Class 1E system and does not perform any safety-related functions. It has nominal bus voltage ratings of 6.9 kV, 480 V, 277 V, 208 V, and 120 V.

Figure 8.3.1-1 shows the main generator, transformers, feeders, buses, and their connections. The ratings of major ac equipment are listed in Table 8.3.1-3.

During power generation mode, the turbine generator normally supplies electric power to the plant auxiliary loads through the unit auxiliary transformers. The plant is designed to sustain a load rejection from 100 percent power with the turbine generator continuing stable operation while supplying the plant house loads. The load rejection feature does not perform any safety function.

During plant startup, shutdown, and maintenance the generator breaker remains open. The main ac power is provided by the preferred power supply from the high-voltage switchyard (switchyard voltage is site-specific) through the plant main stepup transformers and two unit auxiliary transformers. Each unit auxiliary transformer supplies power to about 50 percent of the plant loads. The site specific switchyard and transformer voltage is shown in Figure 8.2-201.

A maintenance source is provided to supply power through two reserve auxiliary transformers. The maintenance source and the associated reserve auxiliary transformers primary voltage are site specific. The reserve auxiliary transformers are sized so that it can be used in place of the unit auxiliary transformers.

The two unit auxiliary transformers have two identically rated 6.9 kV secondary windings. The third unit auxiliary transformer is a two winding transformer sized to accommodate the electric boiler, a portion of the turbine building space heating loads, and site-specific loads. Secondaries of the auxiliary transformers are connected to the 6.9 kV switchgear buses by nonsegregated phase buses. The primary of the unit auxiliary transformer is connected to the main generator isolated phase bus duct tap. The 6.9 kV switchgear designation, location, connection, and connected loads are shown in Figure 8.3.1-1. The buses tagged with odd numbers (ES1, ES3, etc.) are connected to one unit auxiliary transformer and the buses tagged with even numbers (ES2, ES4, etc.) are connected to the other unit auxiliary transformer. ES7 is connected to the third unit auxiliary transformer. 6.9 kV buses ES1-ES6 are provided with an access to the maintenance source through normally open circuit breakers connecting the bus to the reserve auxiliary transformer. ES7 is not connected to the maintenance source. Bus transfer to the maintenance source is manual or automatic through a fast bus transfer scheme.

The arrangement of the 6.9 kV buses permits feeding functionally redundant pumps or groups of loads from separate buses and enhances the plant operational flexibility. The 6.9 kV switchgear powers large motors and the load center transformers. There are two switchgear (ES1 and ES2) located in the annex building, and five (ES3, ES4, ES5, ES6, and ES7) in the turbine building.

The main stepup transformers have protective devices for sudden pressure, neutral overcurrent, and differential current. The unit auxiliary transformers have protective devices for sudden pressure, overcurrent, differential current, and neutral overcurrent. The excitation transformer has ground fault protection. The isophase bus duct has ground fault protection. If these devices sense a fault condition the following actions will be automatically taken:

- Trip high-side (grid) breaker
- Trip generator breaker
- Trip exciter field breaker
- Trip the 6.9 kV buses connected to the faulted transformer
- Initiate a fast bus transfer of ES1-ES6 6.9kV buses ES1-ES6.

The reserve auxiliary transformers have protective devices for sudden pressure, overcurrent, differential current and neutral overcurrent. The reserve auxiliary transformers protective devices trip the reserve supply breaker and any 6.9 kV buses connected to the reserve auxiliary transformers.

The onsite standby power system powered by the two onsite standby diesel generators supplies power to selected loads in the event of loss of normal, and preferred ac power supplies followed by a fast bus transfer to the reserve auxiliary transformers. Those loads that are priority loads for defense-in-depth functions based on their specific functions (permanent nonsafety loads) are assigned to buses ES1 and ES2. These plant permanent nonsafety loads are divided into two functionally redundant load groups (degree of redundancy for each load is described in the sections for the respective systems). Each load group is connected to either bus ES1 or ES2. Each bus is backed by a non-Class 1E onsite standby diesel generator. In the event of a loss of voltage on these buses, the diesel generators are automatically started and connected to the respective buses. In the event where a fast bus transfer initiates but fails to complete, the diesel generator will start on an undervoltage signal; however, if a successful residual voltage transfer occurs, the diesel generator will not be connected to the bus because the successful residual voltage transfer will provide power to the bus before the diesel connection time of 2 minutes. The source incoming breakers on switchgear ES1 and ES2 are interlocked to prevent inadvertent connection of the onsite standby diesel generator and preferred/maintenance ac power sources to the 6.9 kV buses at the same time. The diesel generator, however, is capable of being manually paralleled with the preferred or reserve power supply for periodic testing. Design provisions protect the diesel generators from excessive loading beyond the design maximum rating, should the preferred power be lost during periodic testing. The control scheme, while protecting the diesel generators from excessive loading, does not compromise the onsite power supply capabilities to support the defense-in-depth loads. See Subsection 8.3.1.1.2 for starting and load sequencing of standby diesel generators.

The reactor coolant pumps (RCPs) are powered from the four switchgear buses located in the turbine building, one RCP per bus. Variable-speed drives are provided for RCP startup and for RCP operation when the reactor trip breakers are open. During normal power operation (reactor trip breakers are closed), 60 Hz power is provided directly to the RCPs and the variable-speed drives are not connected.

Each RCP is powered through two Class 1E circuit breakers connected in series. These are the only Class 1E circuit breakers used in the main ac power system for the specific purpose of satisfying the safety-related tripping requirement of these pumps. The reactor coolant pumps connected to a common steam generator are powered from two different unit auxiliary transformers. The bus assignments for the reactor coolant pumps are shown in Figure 8.3.1-1.

The 480 V load centers supply power to selected 460 V motor loads and to motor control centers. Bus tie breakers are provided between two 480 V load centers each serving predominantly redundant loads. This intertie allows restoration of power to selected loads in the event of a failure or maintenance of a single load center transformer. The bus tie breakers are interlocked with the

corresponding bus source incoming breakers so that one of the two bus source incoming breakers must be opened before the associated tie breaker is closed. Load center 71, associated with ES-7, does not have an equivalent match.

The 480 V motor control centers supply power to 460 V motors not powered directly from load centers, while the 480/277 V, and 208/120 V distribution panels provide power for miscellaneous loads such as unit heaters, space heaters, and lighting system. The motor control centers also provide ac power to the Class 1E battery chargers for the Class 1E dc power system as described in Subsection 8.3.2.

Two ancillary ac diesel generators, located in the annex building, provide ac power for Class 1E post-accident monitoring, MCR lighting, MCR and I&C room ventilation, and pump power to refill the PCS water storage tank and the spent fuel pool, when all other sources of power are not available.

Each ancillary ac generator output is connected to a distribution panel. The distribution panel is located in the room housing the diesel generators. The distribution panel has incoming and outgoing feeder circuit breakers as shown on Figure 8.3.1-3. The outgoing feeder circuit breakers are connected to cables which are routed to the divisions B and C voltage regulating transformers and to the PCS pumps. Each distribution panel has the following outgoing connections:

- Connection for Class 1E voltage regulating transformer to power the post-accident monitoring loads, the lighting in the main control room, and ventilation in the main control room and divisions B and C I&C rooms.
- Connection for PCS recirculation pump to refill the PCS water storage tank and the spent fuel pool.
- Connection for local loads to support operation of the ancillary generator (lighting and fuel tank heating).
- Temporary connection for a test load device (e.g., load resistor).

  See Figure 8.3.1-3 for connections to post-72-hour loads.

8.3.1.1.1.1 Electric Circuit Protection

Protective relay schemes and direct acting trip devices on circuit breakers:

- Provide safety of personnel
- Minimize damage to equipment
- Minimize system disturbances
- Isolate faulted equipment and circuits from unfaulted equipment and circuits
- Maintain (selected) continuity of the power supply

Major types of protection systems employed for AP1000 include the following:

Medium Voltage Switchgear

Differential Relaying

Each medium voltage switchgear bus is provided with a bus differential relay (device 87B) to protect against a bus fault. The actuation of this relay initiates tripping of the source incoming circuit breaker and all branch circuit load breakers. The differential protection scheme employs high-speed relays.

Motors rated 1500 hp and above are generally provided with a high dropout overcurrent relay (device 50D) for differential protection.

Overcurrent Relaying

To provide backup protection for the buses, the source incoming circuit breakers are equipped with an inverse time overcurrent protection on each phase and a residually connected inverse time ground overcurrent protection.

Each medium voltage motor feeder breaker is equipped with a motor protection relay which provides protection against various types of faults (phase and ground) and abnormal conditions such as locked rotor and phase unbalance. Motor overload condition is annunciated in the main control room.

Each medium voltage power feeder to a 480 V load center has a multifunction relay. The relay provides overcurrent protection on each phase for short circuit and overload, and an instantaneous overcurrent protection for ground fault.

Undervoltage Relaying

Medium voltage buses are provided with a set of three undervoltage relays (device 27B) which trip motor feeder circuit breakers connected to the bus upon loss of bus voltage using two-out-of-three logic to prevent spurious actuation. In addition, a protective device is provided on the line side of incoming supply breakers of buses ES1 and ES2 to initiate an alarm in the main control room if a sustained low or high voltage condition occurs on the utility supply system. The alarm is provided so that the operator can take appropriate corrective measures.

480-V Load Centers

Each motor-feeder breaker in load centers is equipped with a trip unit which has long time, instantaneous, and ground fault tripping features. Overload condition of motors is annunciated in the main control room.

The circuit breakers feeding the 480V motor control centers and other non-motor loads have long time, short time, and ground fault tripping features.

Each load center bus has an undervoltage relay which initiates an alarm in the main control room upon loss of bus voltage.

Load center transformers have transformer winding temperature relays (device 49T) which give an alarm on transformer overload.

480-V Motor Control Center

Motor control center feeders for low-voltage (460 V) motors have molded case circuit breakers (magnetic or motor circuit protectors) and motor starters. Motor starters are provided with thermal units (overload heaters) or current sensors. Other feeders have molded case circuit breakers with thermal and magnetic trip elements for overload and short circuit protection.

Non-Class 1E ac motor-operated valves are protected by thermal overload devices. Thermal overload devices are selected and sized so as to provide the necessary protection while minimizing the probability of spurious interruptions of valve actuation.

8.3.1.1.2 Standby AC Power Supply

8.3.1.1.2.1 Onsite Standby Diesel Generators

Two onsite standby diesel generator units, each furnished with its own support subsystems, provide power to the selected plant nonsafety-related ac loads. Power supplies to each diesel generator subsystem components are provided from separate sources to maintain reliability and operability of the onsite standby power system. These onsite standby diesel generator units and their associated support systems are classified as AP1000 Class D, defense-in-depth systems.

The onsite standby diesel generator function to provide a backup source of electrical power to onsite equipment needed to support decay heat removal operation during reduced reactor coolant system inventory, midloop, operation is identified as an important nonsafety-related function. The standby diesel generators are included in the Investment Protection Short-Term Availability Controls described in Section 16.3 and the Design Reliability Assurance Program described in Section 17.4.

Each of the generators is directly coupled to the diesel engine. Each diesel generator unit is an independent self-contained system complete with necessary support subsystems that include:

- Diesel engine starting subsystem
- Combustion air intake and engine exhaust subsystem
- Engine cooling subsystem
- Engine lubricating oil subsystem
- Engine speed control subsystem
- Generator, exciter, generator protection, monitoring instruments, and controls subsystems

The diesel-generator starting air subsystem consists of an ac motor-driven, air-cooled compressor, a compressor inlet air filter, an air-cooled aftercooler, an in-line air filter, refrigerant dryer (with dew point at least 10°F less than the lowest normal diesel generator room temperature), and an air receiver with sufficient storage capacity for three diesel engine starts. The starting air subsystem will be consistent with manufacturer's recommendations regarding the devices to crank the engine, duration of the cranking cycle, the number of engine revolutions per start attempt, volume and design pressure of the air receivers, and compressor size. The interconnecting stainless steel piping from the compressor to the diesel engine dual air starter system includes air filters, moisture drainers, and pressure regulators to provide clean dry compressed air at normal diesel generator room temperature for engine starting.

The diesel-generator combustion air intake and engine exhaust subsystem provides combustion air directly from the outside to the diesel engine while protecting it from dust, rain, snow and other environmental particulates. It then discharges exhaust gases from the engine to the outside of the diesel generator building more than 20 feet higher than the air intake. The combustion air circuit is separate from the ventilation subsystems and includes weather protected dry type inlet air filters piped directly to the inlet connections of the diesel engine-mounted turbochargers. The combustion air filters are capable of reducing airborne particulate material, assuming the maximum expected airborne particulate concentration at the combustion air intake. Each engine is provided with two filters as shown in Figure 8.3.1-4. A differential pressure gauge is installed across each filter to determine the need for filter replacement. The engine exhaust gas circuit consists of the engine exhaust gas discharge pipes from the turbocharger outlets to a single vertically mounted outdoor silencer which discharges to the atmosphere. Manufacturer's recommendations are considered in

the design of features to protect the silencer module and other system components from possible clogging due to adverse atmospheric conditions, such as dust storms, rain, ice, and snow.

The diesel-generator engine cooling system is an independent closed loop cooling system, rejecting engine heat through two separate roof-mounted, fan-cooled radiators. The system consists of two separate cooling loops each maintained at a temperature required for optimum engine performance by separate engine-driven coolant water circulating pumps. One circuit cools the engine cylinder block, jacket, and head area, while the other circuit cools the oil cooler and turbocharger aftercooler. The cooling water in each loop passes through a three-way self-contained temperature control valve which modulates the flow of water through or around the radiator, as necessary, to maintain required water temperature. The temperature control valve has an expanding wax-type temperature-sensitive element or equivalent. The cooling circuit, which cools the engine cylinder blocks, jacket, and head areas, includes a keep-warm circuit consisting of a temperature controlled electric heater and an ac motor-driven water circulating pump.

The diesel-generator engine lubrication system is contained on the engine skid and includes an engine oil sump, a main engine driven oil pump and a continuous engine prelube system consisting of an ac and dc motor driven prelube pump and electric heater. The prelube system maintains the engine lubrication system in service when the diesel engine is in standby mode. The lube oil is circulated through the engine and various filters and coolers to maintain the lube oil properties suitable for engine lubrication.

The diesel generator engine fuel oil system consists of an engine-mounted, engine-driven fuel oil pump that takes fuel from the fuel oil day tank, and pumps through inline oil filters to the engine fuel injectors and a separate recirculation circuit with a fuel oil cooler. The recirculation circuit discharges back to the fuel oil day tank that is maintained at the proper fuel level by the diesel fuel oil storage and transfer system.

The onsite standby diesel generators are provided with necessary controls and indicators for local or remote monitoring of the operation of the units. Essential parameters are monitored and alarmed in the main control room via the plant data display and processing system as described in Chapter 7. Indications and alarms that are available locally and in the main control room are listed in Table 8.3.1-5.

The design of the onsite standby diesel generators does not ensure functional operability or maintenance access or support plant recovery following design basis events. Maintenance accessibility is provided consistent with the system nonsafety-related functions and plant availability goals.

The piping and instrumentation diagrams for the onsite standby diesel generator units and the associated subsystems are shown on Figures 8.3.1-4 and 8.3.1-5.

The onsite standby power supply system is shown schematically on one line diagram, Figure 8.3.1-1.

The onsite diesel generators will be procured in accordance with an equipment specification which will include requirements based upon the manufacturer's standards and applicable recommendations from documents such as NUREG/CR-0660 (Reference 15). Capability to detect system leakage and to prevent crankcase explosions will be based upon manufacturer's recommendations. Control of moisture in the starting air system by the equipment described above will be based upon manufacturer's recommendations. Dust and dirt in the diesel generator room is controlled by the diesel generator building ventilation system described in Subsection 9.4.10. Personnel training is addressed as part of overall plant training in Subsection 13.2.6. Automatic engine prelube by the equipment described above will be based upon manufacturer's recommendations. Testing, test loading and preventive maintenance is addressed as part of overall plant testing and maintenance in

Chapter 13. Instrumentation to support diagnostics during operation is shown on Figure 8.3.1-4. The overall diesel building ventilation design is described in Subsection 9.4.10 and the combustion air systems are described above. The fuel oil storage and handling system is described in Subsection 9.5.4. High temperature insulation will be based upon manufacturer's recommendations. Response to the effects of engine vibration will be based upon manufacturer's recommendations. Diesel building floor coatings are described in Subsections 6.1.2.1.4 and 6.1.3.2. The diesel generators will be procured to be consistent with the diesel generator building HVAC system described in Subsection 9.4.10.

8.3.1.1.2.2 Generator

Each generator is a direct-shaft driven, air-cooled self ventilated machine. The generator enclosure is open drip-proof type that facilitates free movement of ventilation air. The generator component design is in compliance with the NEMA MG-1 (Reference 1) requirements.

Each generator produces its rated power at 6900 V, 60 Hz. Each generator continuous rating is based on supplying the electrical ac loads listed in Tables 8.3.1-1 or 8.3.1-2. The loads shown on Tables 8.3.1-1 and 8.3.1-2 represent a set of nonsafety-related loads which provide shutdown capability using nonsafety-related systems. The generators can also provide power for additional investment protection ac loads. The plant operator would normally provide power to these loads by de-energizing one of those system components that are redundantly supplied by both the diesel generators. The diesel generator design is compatible with the step loading requirements identified in Tables 8.3.1-1 and 8.3.1-2. The generator exciter and voltage regulator systems are capable of providing full voltage control during operating conditions including postulated fault conditions.

Each generator has a set of potential and current transformers for protective relaying and metering purposes.

The following generator protection functions are provided via relays that are mounted on the local generator control panel:

> Differential (87), overcurrent (50/51), reverse power (32), underfrequency (81), under/over voltage (27/59), loss of excitation (40), ground fault (51g), negative sequence (46), synchronization check (25), voltage balance (60).
>
> **Note**: The number in the parentheses identifies the ANSI device designation.

8.3.1.1.2.3 Onsite Standby Power System Performance

The onsite standby power system provides reliable ac power to the various plant system electrical loads shown on Tables 8.3.1-1 and 8.3.1-2. These loads represent system components that enhance an orderly plant shutdown under emergency conditions. Additional loads that are for investment protection can be manually loaded on the standby power supply after the loads required for orderly shutdown have been satisfied. The values listed in the "Operating Load (kW)" column of Tables 8.3.1-1 and 8.3.1-2 represent nominal values of the actual plant loads.

Both the diesel engine and the associated generator are rated based on 104°F ambient temperature at 1000 ft elevation as standard site conditions. The selected unit rating has a design margin to accommodate possible derating resulting from other site conditions.

The VEGP site conditions provided in Section 2.3 are bounded by the standard site conditions used to rate both the diesel engine and the associated generator in Subsection 8.3.1.1.2.3.

The diesel generator unit is able to reach the rated speed and voltage and be ready to accept electrical loads within 120 seconds after a start signal.

Each generator has an automatic load sequencer to enable controlled loading on the generator. The automatic load sequencer connects selected loads at predetermined intervals. This feature allows recuperation of generator voltage and frequency to rated values prior to the connection of the next load.

For sequential and manual loading of the onsite standby diesel generator, see Tables 8.3.1-1 and 8.3.1-2.

To enable periodic testing, each generator has synchronizing equipment at a local panel as well as in the main control room.

The logic diagram for diesel generator initiating circuit is shown in Figure 8.3.1-2.

8.3.1.1.2.4 Operation, Inspection, and Maintenance

Operation, inspection and maintenance (including preventive, corrective, and predictive maintenance) procedures consider both the diesel generator manufacturer's recommendations and industry diesel working group recommendations.

8.3.1.1.3 Ancillary ac Diesel Generators

Power for Class 1E post-accident monitoring, MCR lighting, MCR and divisions B and C I&C room ventilation and for refilling the PCS water storage tank and the spent fuel pool when no other sources of power are available is provided by two ancillary ac diesel generators located in the annex building. The ancillary generators are not needed for refilling the PCS water storage tank, spent fuel pool makeup, post-accident monitoring or lighting for the first 72 hours following a loss of all other ac sources.

The generators are classified as AP1000 Class D. The generators are commercial, skid-mounted, packaged units and can be easily replaced in the event of a failure. Generator control is manual from a control integral with the diesel skid package. These generators are located in the portion of the Annex Building that is a seismic Category II structure.

For these systems and components, the design of equipment anchorages is consistent with the SSE design of equipment anchorages of seismic Category I items and there should be no spatial interaction with any other non-seismic SSC that could adversely interact to prevent the functioning of the post-72 hour SSCs following an SSE; no dynamic qualification of the active equipment is necessary. Features of this structure which protect the function of the ancillary generators are analyzed and designed for Category 5 hurricanes, including the effects of sustained winds, maximum gusts, and associated wind-borne missiles.

The fuel for the ancillary generators is stored in a tank located in the same room as the generators. The fuel tank, piping, and valves are analyzed to show that they withstand an SSE. The tank includes provisions for venting to the outside atmosphere and for refilling from a truck or other mobile source of fuel. The tank is seismic Category II and holds sufficient fuel for 4 days of operation.

Each ancillary generator output is connected to a distribution panel located in the same room as the generators. Each distribution panel has an incoming circuit breaker and outgoing feeder circuit breakers. The outgoing feeder circuit breakers are connected to cables that are routed to the divisions B and C voltage regulating transformers and to the passive containment cooling system recirculation pumps (see Figure 8.3.1-3).

8.3.1.1.4 Electrical Equipment Layout

The main ac power system distributes ac power to the reactor, turbine, and balance of plant (BOP) auxiliary electrical loads for startup, normal operation, and normal/emergency shutdown.

The medium voltage switchgear ES1 and ES2 are located in the electrical switchgear rooms 1 and 2 of the annex building. The incoming power is supplied from the unit auxiliary transformers ET2A and ET2B (X windings) via nonsegregated buses. The nonsegregated buses are routed from the transformer yard to the annex building in the most direct path practical.

The switchgear ES3, ES4, ES5, and ES6 are located in the turbine building electrical switchgear rooms. The incoming power is supplied from the unit auxiliary transformers ET2A and ET2B (Y windings) via nonsegregated buses to ES3 and ES4 and from ET2A and ET2B (X windings) to ES5 and ES6. Switchgear ES7 is located in the auxiliary boiler room in the turbine building.

The Class 1E medium voltage circuit breakers, ES31, ES32, ES41, ES42, ES51, ES52, ES61, and ES62, for four reactor coolant pumps are located in the auxiliary building.

The 480 V load centers are located in the turbine building electrical switchgear rooms 1 and 2 and in the annex building electrical switchgear rooms 1 and 2 based on the proximity of loads and the associated 6.9 kV switchgear. Load center 71 is located in the auxiliary boiler room in the turbine building.

The 480 V motor control centers are located throughout the plant to effectively distribute power to electrical loads. The load centers and motor control centers are free standing with top or bottom cable entry and front access. The number of stacks/cubicles varies for each location.

8.3.1.1.5 Heat Tracing System

The electric heat tracing system is nonsafety-related and provides electrical heating where temperature above ambient is required for system operation and freeze protection.

The electric heat tracing system is part of the AP1000 permanent nonsafety-related loads and is powered from the diesel backed 480 V ac motor control centers through 480 V - 208Y/120V transformers and distribution panels.

8.3.1.1.6 Containment Building Electrical Penetrations

The electrical penetrations are in accordance with IEEE 317 (Reference 2).

The penetrations conform to the same functional service level as the cables, (for example, low-level instrumentation is in a separate nozzle from power and control). The same service class separation requirements apply within inboard/outboard terminal boxes.

Individual electrical penetrations are provided for each electrical service level and follow the same raceway voltage grouping described in Subsection 8.3.1.3.4. Optical fibers are installed in instrumentation and control or low voltage power electric penetrations.

The electrical penetrations conductor modules are in penetrations of the same Service Class. Modules for instrumentation signals will be in instrumentation penetrations; modules for control power (e.g., 120/125/250V) will be in control power penetrations; modules for low voltage power (e.g., 600 Vac) will be in low voltage power penetrations.

It is possible to combine low voltage power with control power in the same electrical penetration assembly.

Penetrations carrying medium voltage power cables have thermocouples to monitor the temperature within the assembly at the spot expected to have the hottest temperature.

Electrical circuits passing through electrical penetrations have primary and backup protective devices. These devices coordinate with the thermal capability curves (I^2t) of the penetration assemblies. The penetrations are rated to withstand the maximum short-circuit currents available either continuously without exceeding their thermal limit, or at least longer than the field cables of the circuits so that the fault or overload currents are interrupted by the protective devices prior to a potential failure of a penetration. Penetrations are protected for the full range of currents up to the maximum short circuit current available.

Primary and backup protective devices protecting Class 1E circuits are Class 1E in accordance with IEEE 741 (Reference 10). Primary and backup protective devices protecting non-Class 1E circuits are non-Class 1E.

Penetration overcurrent protection coordination curves are generated based on the protection requirements specified by the penetration equipment manufacturer. When necessary, penetrations are protected for instantaneous overcurrent by current limiting devices such as current-limiting fuses, current-limiting breakers, or reactors.

Procedures implement periodic testing of protective devices that provide penetration overcurrent protection. A sample of each different type of overcurrent device is selected for periodic testing during refueling outages. Testing includes:

- Verification of thermal and instantaneous trip characteristics of molded case circuit breakers.
- Verification of long time, short time, and instantaneous trips of medium voltage vacuum circuit breakers.
- Verification of long time, short time, and instantaneous trips of low voltage air circuit breakers.
- Verification of Class 1E and non-Class 1E dc protective device characteristics (except fuses) per manufacturer recommendations, including testing for overcurrent interruption and/or fault current limiting.

Penetration protective devices are maintained and controlled under the plant configuration control program. A fuse control program, including a master fuse list, is established based on industry operating experience.

8.3.1.1.7 Grounding System

The AP1000 grounding system complies with the guidelines provided in IEEE 665 (Reference 18) and IEEE 1050 (Reference 20). The grounding system consists of the following four subsystems:

- Station grounding grid
- Electrical system grounding (neutral grounding)
- Equipment grounding
- Instrument/computer grounding

The station grounding grid subsystem consists of buried, interconnected bare copper conductors and ground rods forming a plant ground grid matrix. The subsystem maintains a uniform ground potential and limits the step and touch potentials to safe values under all fault conditions.

The electrical system grounding (neutral grounding) subsystem provides grounding of the neutral points of the main generator, main step-up transformers, auxiliary transformers, load center transformers, and onsite standby diesel generators. The main and diesel generator neutrals are grounded through grounding transformers providing high-impedance grounding. The main step-up and load center transformer neutrals are grounded solidly. The auxiliary (unit and reserve) transformer secondary winding neutrals are resistance grounded except for the auxiliary transformer UAT 2C, which is solidly grounded to meet the requirements of the electrode type auxiliary boiler.

The equipment grounding subsystem provides grounding of the equipment enclosures, metal structures, metallic tanks, ground bus of switchgear assemblies, load centers, MCCs, and control cabinets. The equipment grounding subsystem is connected to the station grounding grid.

The instrument/computer grounding subsystem provides plant instrument/computer grounding through separate radial grounding systems consisting of isolated instrumentation ground buses and insulated cables. The radial grounding systems are connected to the station grounding grid at one point only and are insulated from all other grounding circuits.

A station grounding grid subsystem design within the plant boundary includes step and touch potentials near equipment that are within the acceptable limit for personnel safety. Actual resistivity measurements from soil samples taken at the plant site were analyzed to create a soil model. The ground grid conductor size was then determined using the methodology outlined in IEEE 80, “IEEE Guide for Safety in AC Substation Grounding” (Reference 201) and a grid configuration for the site was created. The grid configuration was modeled in conjunction with the soil model. The resulting step and touch potentials are within the acceptable limits.

8.3.1.1.8 Lightning Protection

The lightning protection system, consisting of air terminals and ground conductors, is provided for the protection of exposed structures and buildings housing safety-related and fire protection equipment in accordance with NFPA 780 (Reference 19). Also, lightning arresters are provided in each phase of the transmission lines and at the high-voltage terminals of the outdoor transformers. The isophase bus connecting the main generator and the main transformer and the medium-voltage switchgear is provided with lightning arresters. In addition, surge suppressors are provided to protect the plant instrumentation and monitoring system from lightning-induced surges in the signal and power cables connected to devices located outside.

Direct-stroke lightning protection for facilities is accomplished by providing a low-impedance path by which the lightning stroke discharge can enter the earth directly. The direct-stroke lightning protection system, consisting of air terminals, interconnecting cables, and down conductors to ground, are provided external to the facility in accordance with the guidelines included in NFPA 780. The system is connected to the station grounding grid subsystem to facilitate dissipation of the large current of a direct lightning stroke. The lightning arresters and the surge suppressors connected directly to ground provide a low-impedance path to ground for the surges caused or induced by lightning. Thus, fire or damage to facilities and equipment resulting from a lightning stroke is avoided.

In accordance with IEEE 665, "IEEE Standard for Generating Station Grounding" (Section 8.3 Reference 18), a lightning protection risk assessment for the buildings comprising the VEGP Units 3 and 4 was performed based on the methodology in NFPA 780 (Section 8.3 Reference 19). The tolerable lightning frequency for each of the buildings was determined to be less than the expected lightning frequency; therefore, lightning protection is required for the VEGP Units 3 and 4 buildings

based on the design in accordance with NFPA 780. The zone of protection is based on the elevations and geometry of the structures. It includes the space covered by a rolling sphere having a radius sufficient enough to cover the building to be protected. The zone of protection method is based on the use of ground masts, air terminals and shield wires. Either copper or aluminum is used for lightning protection. Lightning protection grounding is interconnected with the station grounding grid subsystem or switchyard grounding system.

8.3.1.2 Analysis

The ac power system is non-Class 1E and is not required for safe shutdown. Compliance with existing regulatory guides and General Design Criteria is covered in Table 8.1-1 of Section 8.1.

8.3.1.3 Raceway/Cable

8.3.1.3.1 General

The raceway system for non-Class 1E ac circuits complies with IEEE 422 (Reference 3) in respect to installation and support of cable runs between electrical equipment including physical protection. A raceway system is the complete assembly of raceways (e.g., conduit, cable tray, or wireway) and raceway supports.

8.3.1.3.2 Load Groups Segregation

There are two nonsafety-related load groups associated with different transformers, buses, and onsite standby diesel generators. No physical separation is required as these two ac load groups are non-Class 1E and nonsafety-related.

8.3.1.3.3 Cable Derating and Cable Tray Fill

Cable Derating

The power and control cable insulation is designed for a conductor temperature of 90°C. The allowable current carrying capacity of the cable is based on the insulation design temperature while the surrounding air is at an ambient temperature of 65°C for the containment and 40 to 50°C for other areas. Power cables, feeding loads from switchgear, load centers, motor control centers, and distribution panels are sized at 125 percent of the full-load current at a 100-percent load factor.

The power cable ampacities are in accordance with the Insulated Cable Engineers Association publications (Reference 4 and 11), and National Electric Code (Reference 5). The derating is based on the type of installation, the conductor and ambient temperature, the number of cables in a raceway, and the grouping of the raceways. A further derating of the cables is applied for those cables which pass through a fire barrier. The method of calculating these derating factors is determined from the Insulated Cable Engineers Association publications and other applicable standards.

Instrumentation cable insulation is also designed for a conductor temperature of 90°C. The operating power of these cables is low (usually mV or mA) and does not cause cable overheating at the maximum design ambient temperature.

For circuits that are routed partly through conduit and partly through trays or underground ducts, the cable size is based on the ampacity in that portion of the circuit with the lowest indicated current carrying capacity.

Cable Tray Fill

Cable tray design is based on random cable fill of 40 percent of usable tray depth. If tray fill exceeds the above stated maximum fill, tray fill will be analyzed and the acceptability documented.

Conduit fill design is in compliance with Tables 1, 2, 3, and 4 of Chapter 9, National Electrical Code (Reference 5).

8.3.1.3.4 Raceway and Cable Routing

When cable trays are arranged in a vertical array they are arranged physically from top to bottom, in accordance with the function and voltage class of the cables as follows:

- Medium voltage power (6.9 kV)
- Low voltage power (480 Vac, 208Y/120 Vac, 125 Vdc/250 Vdc)
- 120 Vac/125 Vdc/250 Vdc signal and control (if used)
- Instrumentation (analog and digital)

480 Vac, 208Y/120 Vac, 125 Vdc/250 Vdc power cables may be mixed with 120 Vac/125 Vdc/ 250 Vdc signal and control cables.

Separate raceways are provided for medium voltage power, low voltage power and control, as well as instrumentation cables.

Non-Class 1E raceways and supports installed in seismic Category I structures are designed and/or physically arranged so that the safe shutdown earthquake could not cause unacceptable structural interaction or failure of seismic Category I components.

Raceways are kept at a reasonable distance from heat sources such as steam piping, steam generators, boilers, high and low pressure heaters, and any other actual or potential heat source. Cases of heat source crossings are evaluated and supplemental heat shielding is used if necessary.

For Class 1E raceway and cable routing see Subsection 8.3.2.

8.3.1.4 Inspection and Testing

Preoperational tests are conducted to verify proper operation of the ac power system. The preoperational tests include operational testing of the diesel load sequencer and diesel generator capacity testing.

Procedures are established for periodic verification of proper operation of the Onsite AC Power System capability for automatic and manual transfer from the preferred power supply to the maintenance power supply and return from the maintenance power supply to the preferred power supply.

8.3.1.4.1 Diesel Load Sequencer Operational Testing

The load sequencer for each standby diesel generator is tested to verify that it produces the appropriate sequencing signals within five (5) seconds of the times specified in Tables 8.3.1-1 and 8.3.1-2. The five second margin is sufficient for proper diesel generator transient response.

8.3.1.4.2 Standby Diesel Generator Capacity Testing

Each standby diesel generator is tested to verify the capability to provide 4000 kW while maintaining the output voltage and frequency within the design tolerances of 6900±10% Vac and 60±5% Hz. The

4000 kW capacity is sufficient to meet the loads listed in Tables 8.3.1-1 and 8.3.1-2. The test duration will be the time required to reach engine temperature equilibrium plus 2.5 hours. This duration is sufficient to demonstrate long-term capability.

8.3.1.4.3 Ancillary Diesel Generator Capacity Testing

Each ancillary diesel generator is tested to verify the capability to provide 35 kW while maintaining the output voltage and frequency within the design tolerances of 480±10% Vac and 60±5% Hz. The 35 kW capacity is sufficient to meet the loads listed in Table 8.3.1-4. The test duration will be the time required to reach engine temperature equilibrium plus 2.5 hours. This duration is sufficient to demonstrate long-term capability.

8.3.2 DC Power Systems

8.3.2.1 Description

The plant dc power system is comprised of independent Class 1E and non-Class 1E dc power systems. Each system consists of ungrounded stationary batteries, dc distribution equipment, and uninterruptible power supply (UPS).

The Class 1E dc and UPS system provides reliable power for the safety-related equipment required for the plant instrumentation, control, monitoring, and other vital functions needed for shutdown of the plant. In addition, the Class 1E dc and UPS system provides power to the normal and emergency lighting in the main control room and at the remote shutdown workstation.

The Class 1E dc and UPS system is capable of providing reliable power for the safe shutdown of the plant without the support of battery chargers during a loss of all ac power sources coincident with a design basis accident (DBA). The system is designed so that no single failure will result in a condition that will prevent the safe shutdown of the plant.

The non-Class 1E dc and UPS system provides continuous, reliable electric power to the plant non-Class 1E control and instrumentation loads and equipment that are required for plant operation and investment protection and to the hydrogen igniters located inside containment. Operation of the non-Class 1E dc and UPS system is not required for nuclear safety. See Subsection 8.3.2.1.2.

The batteries for the Class 1E and non-Class 1E dc and UPS systems are sized in accordance with IEEE 485 (Reference 6). The operating voltage range of the Class 1E batteries and of the EDS5 turbine generator motor load support batteries is 210 to 280 Vdc. The maximum equalizing charge voltage for the Class 1E and EDS5 batteries is 280 Vdc. The nominal system voltage is 250 Vdc. The operating voltage range of non-Class 1E EDS1 through EDS4 batteries is 105 to 140 Vdc. The maximum equalizing charge voltage for non-Class 1E EDS1 through EDS4 batteries is 140 Vdc. The nominal system voltage is 125 Vdc for non-Class 1E EDS1 through EDS4.

The qualification test program for AP1000 24-hour and 72-hour class 1E batteries meets or exceeds the requirements of IEEE Standard 323, IEEE Standard 344, and IEEE Standard 535, including required and recommended margins, and it is in regulatory compliance with Regulatory Guides 1.89, 1.100, and 1.158. The test program requires that the battery be subjected to accelerated thermal aging and discharge cycling (wear aging) in accordance with IEEE Standard 323 and IEEE Standard 535 over its qualified life objective followed by the DBE seismic event performed in accordance with IEEE Standard 344. In addition, following the aging process, the test specimens shall be subjected to environmental testing to verify the equipment's ability to operate in postulated abnormal environmental conditions during plant operation. Discharge cycling will be performed as a potential aging mechanism prior to seismic testing using Type 3 modified performance test method in accordance with IEEE Standard 450-2002 at intervals representative of the AP1000 surveillance test

requirements of the batteries with 10% margin in the number of discharge cycles, which establishes margin for the expected life of the battery. Thus, magnitude/duration (modified performance test versus service and performance tests) and test interval envelop the AP1000 and industry cycling requirements. If new battery failure modes are detected during the qualification testing, these failure modes will be evaluated for any potential changes to the technical specification's surveillance requirements and revision to maintenance procedures required to ensure identification of degradation prior to reaching those failure modes during plant operation. Following the qualification process, a report that uniquely describes step-by-step the tests performed and results, and addresses any deficiencies and repairs, including photographs, drawings, and other materials, will be maintained for records.

8.3.2.1.1 Class 1E DC and UPS System

8.3.2.1.1.1 Class 1E DC Distribution

The Class 1E dc distribution is in compliance with applicable General Design Criteria, IEEE standards, and Regulatory Guides listed in Subsection 8.1.4.3. The scope of compliance encompasses physical separation, electrical isolation, equipment qualification, effects of single active component failure, capacity of battery and battery charger, instrumentation and protective devices, and surveillance test requirements. The Class 1E dc components are housed in seismic Category I structures. For system configuration and equipment rating, see Class 1E dc one-line diagram, Figure 8.3.2-1. Nominal ratings of major Class 1E dc equipment are listed in Table 8.3.2-5.

There are four independent, Class 1E 250 Vdc divisions, A, B, C, and D. Divisions A and D are each comprising one battery bank, one switchboard, and one battery charger. The battery bank is connected to Class 1E dc switchboard through a set of fuses and a disconnect switch. Divisions B and C are each composed of two battery banks, two switchboards, and two battery chargers. The first battery bank in the four divisions, designated as 24-hour battery bank, provides power to the loads required for the first 24 hours following an event of loss of all ac power sources concurrent with a design basis accident (DBA). The second battery bank in divisions B and C, designated as 72-hour battery bank, is used for those loads requiring power for 72 hours following the same event. Each switchboard connected with a 24-hour battery bank supplies power to an inverter, a 250 Vdc distribution panel, and a 250 Vdc motor control center. Each switchboard connected with a 72-hour battery bank supplies power to an inverter. No load shedding or load management program is needed to maintain power during the required 24-hour safety actuation period.

A single spare battery bank with a spare battery charger is provided for the Class 1E dc and UPS system. In the case of a failure or unavailability of the normal battery bank and the battery charger, permanently installed cable connections allow the spare to be connected to the affected bus by plug-in locking type disconnect along with kirk-key interlock switches. The plug-in locking type disconnect and kirk-key interlock switches permit connection of only one battery bank and battery charger at a time so that the independence of each battery division is preserved. The spare battery and the battery charger can also be utilized as a substitute when offline testing, maintenance, and equalization of an operational battery bank are desired.

Each 250 Vdc Class 1E battery division and the spare battery bank are separately housed as described in Subsection 8.3.2.1.3.

Each battery bank, including the spare, has a battery monitor system that detects battery open-circuit conditions and monitors battery voltage. The battery monitor provides a trouble alarm in the main control room. The battery monitors are not required to support any safety-related function. The battery monitor connection to the Class 1E batteries are provided with safety-related fuse isolation panels that provide the required isolation between non-Class 1E and Class 1E circuits and equipment. The fuse panels are qualified as isolation devices in accordance with IEEE 384

(Reference 7) and Regulatory Guide 1.75, with the exceptions noted in Appendix 1A. Monitoring and alarming of dc current and voltages are through the plant control system which includes a battery discharge rate alarm. AP1000 generally uses fusible disconnect switches in the Class 1E dc system. If molded-case circuit breakers are used for dc applications, they will be sized to meet the dc interrupting rating requirements.

The Class 1E dc switchboards employ fusible disconnect switches and have adequate short circuit and continuous-current ratings. The main bus bars are braced to withstand mechanical forces resulting from a short-circuit current. Fused transfer switch boxes, equipped with double pole double throw transfer switches, are provided to facilitate battery testing, and maintenance.

Battery chargers are connected to dc switchboard buses. The input ac power for the Class 1E dc battery chargers is supplied from non-Class 1E 480 Vac diesel generator backed motor control centers. The battery chargers provide the required isolation between the non-1E ac and the Class 1E dc electrical systems. The battery chargers are qualified as isolation devices in accordance with IEEE 384 (Reference 7) and Regulatory Guide 1.75. Each battery charger has an input ac and output dc circuit breaker for the purpose of power source isolation and required protection. Each battery charger prevents the ac supply from becoming a load on the battery due to a power feedback as a result of the loss of ac power to the chargers. Each battery charger has a built-in current limiting circuit, adjustable between 110 to 125 percent of its rating to hold down the output current in the event of a short circuit or overload on the dc side. The output of the charger is ungrounded and filtered. The output float and equalizing voltages are adjustable. The battery chargers have an equalizing timer and a manual bypass switch to permit periodic equalizing charges. Each charger is capable of providing the continuous demand on its associated dc system while providing sufficient power to charge a fully discharged battery (as indicated by the nominal load requirements in Tables 8.3.2-1 through 8.3.2-4) within a 24-hour period. The battery chargers are provided with a common failure/trouble alarm.

The Class 1E dc motor control centers operate at 250 Vdc nominal two wire, ungrounded system. The dc motor control centers provide branch circuit protection for the dc motor-operated valves. Motor-operated valves are protected by thermal overload devices in accordance with Regulatory Guide 1.106. Motor overload condition is annunciated in the main control room. The loads fed from the motor control centers are protected against a short-circuit fault by fusible disconnect switches. Reduced-voltage motor controllers limit the starting current to approximately 500 percent of rated current for motors equal to or larger than 5 HP.

The Class 1E dc distribution panels provide power distribution and tripping capability between the 250 Vdc power sources and the assigned safeguard loads indicated on Figure 8.3.2-1.

No site-specific non-Class 1E dc loads are connected to the Class 1E dc system.

8.3.2.1.1.2 Class 1E Uninterruptible Power Supplies

The Class 1E UPS provides power at 208 Y/120 Vac to four independent divisions of Class 1E instrument and control power buses. Divisions A and D each consist of one Class 1E inverter associated with an instrument and control distribution panel and a backup voltage regulating transformer with a distribution panel. The inverter is powered from the respective 24-hour battery bank switchboard. Divisions B and C each consist of two inverters, two instrument and control distribution panels, and a voltage regulating transformer with a distribution panel. One inverter is powered by the 24-hour battery bank switchboard and the other, by the 72-hour battery bank switchboard. For system configuration and equipment rating, see Figures 8.3.2-1 and 8.3.2-2. The nominal ratings of the Class 1E inverters and the voltage regulating transformers are listed in Table 8.3.2-5. Under normal operation, the Class 1E inverters receive power from the associated battery bank. If an inverter is inoperable or the Class 1E 250 Vdc input to the inverter is unavailable,

the power is transferred automatically to the backup ac source by a static transfer switch featuring a make-before-break contact arrangement. The backup power is received from the diesel generator backed non-Class 1E 480 Vac bus through the Class 1E voltage regulating transformer. In addition, a manual mechanical bypass switch is provided to allow connection of backup power source when the inverter is removed from service for maintenance.

In order to supply power during the post-72-hour period following a design basis accident, provisions are made to connect a ancillary ac generator to the Class 1E voltage regulating transformers (divisions B and C only). This powers the Class 1E post-accident monitoring systems and the lighting in the main control room and ventilation in the MCR and divisions B and C I&C rooms. See Subsection 8.3.1.1.1 for post-72-hour power distribution details, Subsection 9.4.1 for post-72-hour ventilation, and Subsection 9.5.3 for post-72-hour lighting details respectively.

8.3.2.1.2 Non-Class 1E DC and UPS System

The non-Class 1E dc and UPS system consists of the electric power supply and distribution equipment that provide dc and uninterruptible ac power to the plant non-Class 1E dc and ac loads that are critical for plant operation and investment protection and to the hydrogen igniters located inside containment. The non-class 1E dc and UPS system is comprised of two subsystems representing two separate power supply trains. The subsystems are located in separate rooms in the annex building. Figure 8.3.2-3, non-Class 1E dc and UPS system one line diagram represents the distribution configuration.

Each of the EDS1 and 3, and 2 and 4 subsystems consists of separate dc distribution buses. These two buses can be connected by a normally open circuit breaker to enhance the power supply source availability.

Each dc subsystem includes battery chargers, stationary batteries, dc distribution equipment, and associated monitoring and protection devices.

DC buses 1, 2, 3, and 4 (See Figure 8.3.2-3) provide 125 Vdc power to the associated inverter units that supply the ac power to the non-Class 1E uninterruptible power supply ac system. An alternate regulated ac power source for the UPS buses is supplied from the associated regulating transformers. DC bus 5 supplies large dc motors. This configuration isolates the large motors.

The onsite standby diesel generator backed 480 Vac distribution system provides the normal ac power to the battery chargers. Industry standard stationary batteries that are similar to the Class 1E design are provided to supply the dc power source in case the battery chargers fail to supply the dc distribution bus system loads. The batteries are sized to supply the system loads for a period of at least two hours after loss of all ac power sources. Hydrogen igniter power requirements as stated in Subsection 6.2.4.2.3 are provided through the use of appropriate load shedding.

The dc distribution switchboard houses the dc feeder protection device, dc bus ground fault detection, and appropriate metering. The component design and the current interrupting device selection follow the circuit coordination principles.

The non-Class 1E dc and UPS system is designed to meet the quality guidelines established by Generic Letter 85-06, "Quality Assurance Guidance for ATWS Equipment that is not Safety-Related."

An EDS spare battery bank (EDSS-DB-1A and EDSS-DB-1B) with spare battery chargers (EDSS-DC-1 and EDSS-DC-2), is provided for the non-Class1E dc and UPS system (Figure 8.3.2-3). This 125/250 Vdc EDS spare battery and the EDS buses are completely independent of and not connectable to the IDS buses. In the case of an EDS failure or unavailability of the normal battery bank and the battery charger, permanently installed cable connections allow the spare to be

connected to the affected bus with kirk-key interlock switches. The kirk-key interlock switches permit connection of only one battery bank and battery charger at a time. The spare battery bank and the battery chargers can also be utilized as a substitute when offline testing, maintenance, and equalization of an operational battery bank is desired. A center tap bus arrangement consisting of a +125 Vdc bus, a 0 bus, and a -125 Vdc bus is used in the spare fused transfer switchbox (EDSS-DF-1) in order to obtain either 125 Vdc or 250 Vdc. Spare battery EDSS-DB-1A and spare battery charger EDSS-DC-1 are connected to the +125 Vdc bus and 0 bus, which feed EDS1 and EDS3. Spare battery EDSS-DB-1B and spare battery charger EDSS-DC-2 are connected to the 0 bus and -125 Vdc bus, which feed EDS2 and EDS4. EDS5 is connected to the +125 Vdc and -125 Vdc bus, which puts the two battery strings in series, providing 250 Vdc.

8.3.2.1.3 Separation and Ventilation

For the Class 1E dc system, the 24-hour and the 72-hour battery banks are housed in the auxiliary building in ventilated rooms apart from chargers and distribution equipment. The battery rooms are ventilated to limit hydrogen accumulation. Subsection 9.4.1 describes the ventilation system in the battery rooms. Each of the four divisions of dc systems are electrically isolated and physically separated to prevent an event from causing the loss of more than one division.

8.3.2.1.4 Maintenance and Testing

Components of the 125 Vdc and 250 Vdc systems undergo periodic maintenance tests to determine the condition of the system. Batteries are checked for electrolyte level, specific gravity, and cell voltage, and are visually inspected.

The surveillance testing of the Class 1E 250 Vdc system is performed as required by the Technical Specifications.

The inverter DC input protection will be set at least 10% higher than the battery charger trip setpoints to prevent the inverter tripping before the battery charger. The time delay for the inverter high dc input voltage trip will be set higher than the time delay for the battery charger to prevent the inverter tripping before the battery charger.

Procedures are established for inspection and maintenance of Class 1E and non-Class 1E batteries. Class 1E battery maintenance and service testing is performed in conformance with Regulatory Guide 1.129. Batteries are inspected periodically to verify proper electrolyte levels, specific gravity, cell temperature and battery float voltage. Cells are inspected in conformance with IEEE 450 and vendor recommendations.

The clearing of ground faults on the Class 1E dc system is also addressed by procedure. The battery testing procedures are written in conformance with IEEE 450 and the Technical Specifications.

Procedures are established for periodic testing of the Class 1E battery chargers and Class 1E voltage regulating transformers in accordance with the manufacturer recommendations.

- Circuit breakers in the Class 1E battery chargers and Class 1E voltage regulating transformers that are credited for an isolation function are tested through the use of breaker test equipment. This verification confirms the ability of the circuit to perform the designed coordination and corresponding isolation function between Class 1E and non-Class 1E components. Circuit breaker testing is done as part of the Maintenance Rule program and testing frequency is determined by that program.

- Fuses / fuse holders that are included in the isolation circuit are visually inspected.

- Class 1E battery chargers are tested to verify current limiting characteristic utilizing manufacturer recommendation and industry practices. Testing frequency is in accordance with that of the associated battery.

8.3.2.2 Analysis

Compliance with General Design Criteria (GDC) and Regulatory Guides is discussed in Sections 3.1 and 1.9, respectively. Refer to Table 8.1-1 of Section 8.1 for guidelines and applicability of GDC, Regulatory Guides and IEEE Standards. A failure modes and effects analysis for the Class 1E dc and UPS system is provided in Table 8.3.2-7.

In the event of a loss of offsite power coincident with a main generator trip, ac power to the battery charger is provided from two separate non-Class 1E onsite standby diesel generators. Divisions A and C chargers receive their ac power from one diesel generator, ZOS MG 02A, and division B and D chargers from the second diesel generator, ZOS MG 02B. Provisions are also made to power the post accident monitoring systems and the main control room lighting loads in divisions B and C from ancillary ac generators during the post 72-hour period as described in Subsection 8.3.2.1.1.2.

The Class 1E battery chargers are designed to limit the input (ac) current to an acceptable value under faulted conditions on the output side, however, the voltage regulating transformers do not have active components to limit current; therefore, the Class 1E voltage regulating transformer maximum current is determined by the impedance of the transformer. They have built-in circuit breakers at the input and output sides for protection and isolation. The circuit breakers are coordinated and periodically tested to verify their current-limiting characteristics. They are qualified as isolation devices between Class 1E and non-Class 1E circuits in accordance with IEEE 384 and Regulatory Guide 1.75.

The four divisions are independent, located in separate rooms, cannot be interconnected, and their circuits are routed in dedicated, physically separated raceways. This level of electrical and physical separation prevents the failure or unavailability of a single battery, battery charger, or inverter from affecting adversely a redundant division.

The Class 1E dc and UPS system is designed in accordance with IEEE 308 (Reference 8) and IEEE 946 (Reference 9). Important system component failures are annunciated. The battery monitoring system detects battery open circuit condition and monitors battery voltage. The Class 1E 208Y/120Vac distribution panels are equipped with undervoltage protection. The set of fuses located in the 250 Vdc switchboards provide selective tripping of circuits for a fault to limit the effects of the abnormal condition, minimize system disturbance and protect the battery from complete accidental discharge through a short circuit fault. The Class 1E dc system is ungrounded, thus, a single ground fault does not cause immediate loss of the faulted system. Ground detections with alarms are provided for each division of power so that ground faults can be located and removed before a second ground fault could disable the affected circuit. A spare battery bank and charger enables testing, maintenance, and equalization of battery banks offline. This configuration provides the capability for each battery bank or battery charger to be separately tested and maintained (including battery discharge tests, battery cell replacement, battery charger replacement) without limiting continuous plant operation at 100-percent power.

Short circuit analyses will be performed in accordance with IEEE 946 (Reference 9) and/or other acceptable industry standards or practices to determine fault currents. Circuit interrupting device coordination analyses will be performed in accordance with IEEE 141, 242 (References 16 and 17), and/or other acceptable industry standards or practices.

8.3.2.3 Physical Identification of Safety-Related Equipment

Each safety-related circuit and raceway is given a unique identification number to distinguish between circuits and raceways of different voltage level or separation groups. Each raceway is color coded with indelible ink, paint, or adhesive markers (adhesive markers are not used in the containment) at intervals of 15 feet or less along the length of the raceway and on both sides of floor or wall penetrations. Each cable is color coded at a maximum of 5 feet intervals along the length of the cable and cable markers showing the cable identification number are applied at each end of the cable.

The following color coding is used for identification purposes:

Division	Color Code
A	Brown
B	Green
C	Blue
D	Yellow

8.3.2.4 Independence of Redundant Systems

8.3.2.4.1 General

The routing of cable and the design of raceways prevents a single credible event from disabling a redundant safety-related plant function.

8.3.2.4.2 Raceway and Cable Routing

There are five separation groups for the cable and raceway system: group A, B, C, D, and N. Separation group A contains safety-related circuits from division A. Similarly, separation group B contains safety-related circuits from division B; group C from division C; group D from division D; and group N from nonsafety-related circuits.

Cables of one separation group are run in separate raceway and physically separated from cables of other separation groups. Group N raceways are separated from safety-related groups A, B, C and D. Raceways from group N are routed in the same areas as the safety-related groups according to spatial separation stipulated in Regulatory Guide 1.75 and IEEE 384 with the following exceptions:

- Within the main control room and remote shutdown room (nonhazard areas), the minimum vertical separation for open top cable tray is 3 inches and the minimum horizontal separation is 1 inch.

- Within general plant areas (limited hazard areas), the minimum vertical separation is 12 inches, and the minimum horizontal separation is 6 inches for open top cable trays with low-voltage power circuits for cable sizes <2/0 AWG. For configurations that involve exclusively limited energy content cables (instrumentation and control), these minimum distances are reduced to 3 inches and 1 inch respectively.

- Within panels and control switchboards, the minimum horizontal separation between components or cables of different separation groups (both field-routed and vendor-supplied internal wiring) is 1 inch, and the minimum vertical separation distance is 6 inches.

- For configurations involving an enclosed raceway and an open raceway, the minimum vertical separation is 1 inch if the enclosed raceway is below the open raceway.

The exceptions to the guidance in Regulatory Guide 1.75 are based on test results used to support exceptions to the separation guidance for operating nuclear power plants. A summary of test results from ten electrical separation test programs is documented in Reference 13. These test programs support the AP1000 exceptions.

Non-Class 1E circuits are electrically isolated from Class 1E circuits, and Class 1E circuits from different separation groups are electrically isolated by isolation devices, shielding and wiring techniques, physical separation (in accordance with Regulatory Guide 1.75 for circuits in raceways), or an appropriate combination thereof.

When isolation devices are used to isolate Class 1E circuits from non-Class 1E circuits, the circuits within or from the Class 1E equipment or devices are identified as Class 1E and are treated as such. Beyond the isolation device(s) these circuits are identified as non-Class 1E and are separated from Class 1E circuits in accordance with the above separation criteria.

Power and control cables are installed in conduits, solid bottom trays, or ventilated bottom trays (ladder-type). Solid tray covers are used in outdoor locations and indoors where trays run in areas where falling debris is a problem. Instrumentation cables are routed in conduit or solid bottom cable tray with solid tray covers as required. The cables are derated for specific application in the location where they are installed as stated in Subsection 8.3.1.3.3. The environmental design of electrical equipment including Class 1E cables under normal and abnormal operating conditions is discussed in Section 3.11.

Separate trays are provided for each voltage service level: 6.9 kV, low voltage power (480 Vac, 208Y/120 Vac, 125 Vdc, 250 Vdc), high-level signal and control (120 Vac, 125 Vdc, 250 Vdc), and low level signal (instrumentation). A tray designed for a single class of cables shall contain only cables of the same class except that low voltage power cables may be routed in raceways with high level signal and control cables if their respective sizes do not differ greatly and if they have compatible operating temperatures. When this is done in trays, the power cable ampacity is calculated as if all cables in the tray are power cable. Low voltage power cable and high level signal and control cable will not be routed in common raceways if the fault current, within the breaker or fuse clearing time, is sufficient to heat the insulation to the ignition point. Vertically stacked trays are arranged from top to bottom as stated in Subsection 8.3.1.3.4. In general, a minimum of 12 inches vertical spacing is maintained between trays of different service levels within the stack.

The electrical penetrations are in accordance with IEEE 317 (Reference 2). Class 1E and non-Class 1E electrical penetration assemblies are maintained in a separate nozzle. The physical separation of the Class 1E electrical penetration assemblies are in accordance with Regulatory Guide 1.75. The containment building penetrations are described in Subsection 8.3.1.1.6.

A raceway system is the complete assembly of raceways (e.g., conduit, cable tray, or wireway) and raceway supports. Raceways installed in seismic Category I structures have seismically designed supports or are shown not to affect safety-related equipment should they fail. Trays are not attached rigidly to seismic Category I equipment. Conduits may be attached to seismic Category I equipment with flexible type connections.

8.3.2.4.3 Hazard Protection

Where redundant safety-related and nonsafety-related raceway systems traverse each other, separation in accordance with Regulatory Guide 1.75 and IEEE 384 is maintained.

Where hazards to safety-related raceways are identified, a predetermined minimum separation is maintained between the break and/or missile source and any safety-related raceway, or a barrier designed to withstand the effects of the hazard is placed to prevent damage to raceway of redundant systems. For details of missile protection and high-energy line break protection, see Sections 3.5 and 3.6, respectively.

Where redundant circuits, devices, or equipment (different separation groups) are exposed to the same external hazard(s), predetermined spatial separation is provided. Where the spatial separation cannot be met, qualified barriers are installed. For details on fire protection, see Subsection 9.5.1.

See Section 3.4 for protection of raceways and the associated equipment against flooding.

8.3.2.4.4 Control of Compliance with Separation Criteria during Design and Installation

The separation group identification described in Subsection 8.3.2.3 provides for the maintenance of separation in the routing of cables and the connection of control boards and panels. The separation group designation on the cable or raceway is assigned to maintain compatibility with a single line diagram channel designation and other cables or raceways routed. The routing is verified during installation. Color identification of equipment and cabling (discussed in Subsection 8.3.2.3) assist field personnel in this effort.

8.3.2.5 Inspection and Testing

Preoperational tests are conducted to verify proper operation of the dc power systems. The preoperational tests include MOV terminal voltage testing and capacity testing of the batteries, chargers, inverters, and regulating transformers.

8.3.2.5.1 Class 1E 24-Hour Battery Capacity Testing

Each Class 1E 24-hour battery is tested to verify the capability to provide its load for 24 hours while maintaining the battery terminal voltage above the minimum voltage specified in Table 8.3.2-5. Analysis will be performed based on the design duty cycle, and testing will be performed with loads which envelope the analyzed battery bank design duty cycle. Each battery is connected to a charger maintained at 270±2 V for a period of at least 24 hours prior to the test to assure the battery is fully charged.

8.3.2.5.2 Class 1E 72-Hour Battery Capacity Testing

Each Class 1E 72-hour battery is tested to verify the capability to provide its load for 72 hours while maintaining the battery terminal voltage above the minimum voltage specified in Table 8.3.2-5. Analysis will be performed based on the design duty cycle, and testing will be performed with loads which envelope the analyzed battery bank design duty cycle. Each battery is connected to a charger maintained at 270±2 V for a period of at least 24 hours prior to the test to assure the battery is fully charged.

8.3.2.5.3 Class 1E Spare Battery Capacity Testing

The Class 1E spare battery is tested to the same requirements as the most severe of the six division batteries.

8.3.2.5.4 Class 1E 24-Hour Inverter Capacity Testing

Each Class 1E 24-hour inverter is tested to verify the capability to provide 12 kW while maintaining the output voltage and frequency within the tolerances specified in Table 8.3.2-5. The 12 kW capacity is sufficient to meet the 24-hour inverter loads listed in Tables 8.3.2-1, 8.3.2-2, 8.3.2-3, and 8.3.2-4. The inverter input voltage will be no more than 210 Vdc during the test to represent the conditions at the battery end of life.

8.3.2.5.5 Class 1E 72-Hour Inverter Capacity Testing

Each Class 1E 72-hour inverter is tested to verify the capability to provide 7 kW while maintaining the output voltage and frequency within the tolerances specified in Table 8.3.2-5. The 7 kW capacity is sufficient to meet the 72-hour inverter loads listed in Tables 8.3.2-2 and 8.3.2-3. The inverter input voltage will be no more than 210 Vdc during the test to represent the conditions at the battery end of life.

8.3.2.5.6 Class 1E 24-Hour Charger Capacity Testing

Each Class 1E 24-hour charger is tested to verify the capability to provide 150 A while maintaining the output voltage within the range specified in Table 8.3.2-5. The 150 A is sufficient to meet the 24-hour loads listed in Tables 8.3.2-1, 8.3.2-2, 8.3.2-3, and 8.3.2-4 while maintaining the corresponding battery charged.

8.3.2.5.7 Class 1E 72-Hour Charger Capacity Testing

Each Class 1E 72-hour charger is tested to verify the capability to provide 125 A while maintaining the output voltage within the range specified in Table 8.3.2-5. The 125 A is sufficient to meet the 72-hour loads listed in Tables 8.3.2-2 and 8.3.2-3 while maintaining the corresponding battery charged.

8.3.2.5.8 Class 1E Regulating Transformer Capacity Testing

Each Class 1E regulating transformer is tested to verify the capability to provide 30 kW while maintaining the output voltage within the tolerance specified in Table 8.3.2-5. The 30 kW capacity is sufficient to meet the inverter loads listed in Tables 8.3.2-1, 8.3.2-2, 8.3.2-3 and 8.3.2-4.

8.3.2.5.9 Motor-Operated Valves Terminal Voltage Testing

The operating voltage supplied to Class 1E motor-operated valves is measured to verify the motor starter input terminal voltage is above the minimum design value of 200 Vdc. The battery terminal voltage will be no more than 210 Vdc during the test to represent the conditions at the battery end of life.

8.3.2.5.10 Non-Class 1E Battery Capacity Testing

Each load group 1, 2, 3, and 4 non-Class 1E battery is tested to verify the capability to provide 850 A for two hours while maintaining the battery terminal voltage above the minimum voltage specified in Table 8.3.2-6. The 850 A is sufficient to meet the loads described in Subsection 8.3.2.1.2. Each battery is connected to a charger maintained at 135±1 V for a period of at least 24 hours prior to the test to assure the battery is fully charged.

8.3.2.5.11 Non-Class 1E Inverter Capacity Testing

Each load group 1, 2, 3, and 4 non-Class 1E inverter is tested to verify the capability to provide 55 kW while maintaining the output voltage and frequency within the tolerances specified in Table 8.3.2-6. The 55 kW capacity is sufficient to meet the loads described in Subsection 8.3.2.1.2.

8.3.2.5.12 Non-Class 1E Charger Capacity Testing

Each load group 1, 2, 3, and 4 non-Class 1E charger is tested to verify the capability to provide 900 A while maintaining the output voltage within the range specified in Table 8.3.2-6. The 900 A is sufficient to meet the loads described in Subsection 8.3.2.1.2 while maintaining the corresponding battery charged.

8.3.3 Combined License Information for Onsite Electrical Power

The design of grounding and lightning protection is addressed in Subsections 8.3.1.1.7 and 8.3.1.1.8.

The plant procedures for the following are addressed in Subsections 8.3.1.1.2.4, 8.3.1.1.6 and 8.3.2.1.4.

- Clearing ground fault on the Class 1E dc system
- Checking sulfated battery plates or other anomalous conditions through periodic inspections
- Battery maintenance and surveillance (for battery surveillance requirements, refer to Chapter 16, Section 3.8)
- Periodic testing of penetration protective devices
- Diesel generator operation, inspection, and maintenance in accordance with manufacturers' recommendations.
- Periodic testing on the battery chargers and voltage regulating transformers.

8.3.4 References

1. NEMA MG-1, "Motors and Generators," 1998.
2. IEEE Standard 317, "Electric Penetration Assemblies in Containment Structures for Nuclear Power Generating Stations," 1983.
3. IEEE Standard 422, "Guide for the Design and Installation of Cable Systems in Power Generating Stations," 1986.
4. ICEA Standard Publication P-54-440, "Ampacities of Cables in Open-Top Cable Trays," 1986.
5. NFPA 70, "National Electrical Code (NEC)," 1999.
6. IEEE Standard 485, "IEEE Recommended Practice for Sizing Lead-Acid Batteries for Stationary Applications," 1997.
7. IEEE Standard 384, "IEEE Standard Criteria for Independence of Class 1E Equipment and Circuits," 1981.

8. IEEE Standard 308, "IEEE Standard Criteria for Class 1E Power Systems for Nuclear Power Generating Stations," 1991.

9. IEEE Standard 946, "IEEE Recommended Practice for the Design of dc Auxiliary Power Systems for Generating Stations," 1992.

10. IEEE Standard 741, "IEEE Standard Criteria for the Protection of Class 1E Power Systems and Equipment in Nuclear Power Generating Stations," 1997.

11. IPCEA Standard Publication P-46-426-1962, "Power Cable Ampacities, Volume I - Copper Conductors."

12. IEEE Standard 450, "IEEE Recommended Practice for Maintenance, Testing and Replacement of Vented Lead-Acid Batteries for Stationary Applications," 1995.

13. Young, G. L. et al., "Cable Separation - What Do Industry Programs Show?," IEEE Transactions of Energy Conversion, September 1990, Volume 5, Number 3, pp 585-602.

14. Not used.

15. NUREG/CR-0660, "Enhancement of On-Site Emergency Diesel Generator Reliability," February 1979.

16. IEEE Standard 141, "IEEE Recommended Practice for Electric Power Distribution for Industrial Plants" (IEEE Red Book), 1993.

17. IEEE Standard 242, "IEEE Recommended Practice for Protection and Coordination of Industrial and Commercial Power Systems" (IEEE Buff Book), 1986.

18. IEEE Standard 665, "IEEE Guide for Generating Station Grounding," 1995.

19. NFPA 780, "Standard for the Installation of Lightning Protection Systems," 2000.

20. IEEE Standard 1050, "IEEE Guide for Instrumentation and Control Equipment Grounding in Generating Stations," 1996

201. Institute of Electrical and Electronics Engineers (IEEE), “IEEE Guide for Safety in AC Substation Grounding,” IEEE Std 80-2000, August 4, 2000.

Table 8.3.1-1 (Sheet 1 of 5)
Onsite Standby Diesel Generator ZOS MG 02A Nominal Loads

Automatic Loads (Note 2)					
Item No.	Time Seq. (sec)	Event or Load Description	Rating (hp/kW)	Operating Load (kW) (Note 4)	
				At Power (Note 10)	Shutdown (Note 10)
1.	0	D/G Start Signal is Initiated	-	-	-
2.	TBD	D/G Reaches IDLE Speed (Note 6)	-	-	-
3.	TBD	D/G Reaches Full Speed (Note 6)	-	-	-
4.	120	D/G Breaker Closes, Load Sequencer Starts	-	-	-
5.	120	Load Center Transformer EK11 (Note 7)	2500 kVA	7.5	7.5
6.	120	Load Center Transformer EK12 (Note 7)	2500 kVA	7.5	7.5
7.	120	Load Center Transformer EK14 (Note 7)	2500 kVA	7.5	7.5
8.	120	Annex Bldg Lighting Panels (Note 8)	120 kVA	22	22
9.	120	Aux Bldg Lighting Panels (Note 8)	270 kVA	23	23
10.	120	Turbine Bldg Lighting Panels (Note 8)	120 kVA	30.5	30.5
11.	120	D/G Bldg Lighting Panel (Note 8)	30 kVA	8	8
12.	120	D/G 2A AC/OC Radiator Fan	25 hp	21	21
13.	120	Diesel Oil Transfer Module Unit Heater A	15 kW	15	15

Table 8.3.1-1 (Sheet 2 of 5)
Onsite Standby Diesel Generator ZOS MG 02A Nominal Loads

Automatic Loads (Note 2)					
Item No.	Time Seq. (sec)	Event or Load Description	Rating (hp/kW)	Operating Load (kW) (Note 4)	
				At Power (Note 10)	Shutdown (Note 10)
14.	120	Diesel Oil Transfer Module Exhaust Fan A	0.5 hp	0.5	0.5
15.	120	D/G A Jacket Water Radiator Fan	25 hp	21	21
16.	120	Class 1E Div. A Regulating XFMR 1	45 kVA	15	15
17.	120	Class 1E Div. C Regulating XFMR 1	45 kVA	15	15
18.	120	Motor-Operated Valves (Note 5)	-	-	-
19.	120	D/G A Fuel Oil Transfer Pump	3 hp	3	3
20.	120	D/G A Bldg Stdby Exhaust Fan 1A	3 hp	3	3
21.	120	D/G A Bldg Stdby Exhaust Fan 2A	3 hp	3	3
22.	120	D/G A Bldg Primary AHU MS 01A Fan	3 hp	3	3
23.	120	D/G A Fuel Oil Cooler Fan	2 hp	2	2
24.	120	Load Center Transformer EK13 (Note 7)	2500 kVA	7.5	7.5
25.	140	Start-up Feed Water Pump A	800 hp	665	0
26.	160	Fuel Oil Day Tank Vault Exhaust Fan A	0.5 hp	0.5	0.5
27.	160	Diesel Fuel Oil Transfer Heater A	90 kW	90	90
28.	160	Service Water Pump A	500 hp	350	350
29.	180	Service Water Cooling Tower Cell Fan A	175 hp	120	120
30.	200	Component Cooling Water Pump A	800 hp	580	580

Table 8.3.1-1 (Sheet 3 of 5)
Onsite Standby Diesel Generator ZOS MG 02A Nominal Loads

Automatic Loads (Note 2)					
Item No.	Time Seq. (sec)	Event or Load Description	Rating (hp/kW)	Operating Load (kW) (Note 4)	
				At Power (Note 10)	Shutdown (Note 10)
31.	240	Normal Residual Heat Removal Pump A	250 hp	0	207
32.	240	RNS Pump Room Fan A	1.5 hp	0	1.5
33.	240	Annex Bldg Equipment Room Return/Exhaust Fan A (Note 12)	20 hp	17	17
34.	240	Annex Bldg Equipment Room AHU MS02A Fan (Note 12)	50 hp	42	42
35.	240	Annex Bldg Swgr Rm AHU MS 05A Fan (Note 12)	50 hp	42	42
36.	240	Annex Bldg Swgr Rm Ret/Exhaust Fan 06A (Note 12)	25 hp	21	21
37.	240	Instrument Air Compressor A	250 hp	185	185
38.	240	Instrument Air Dryer Package A	0.008 kW	0.008	0.008
39.	300	Non-1E Battery Charger EDS1-DC-1	195 kVA	162.5	162.5
40.	300	Non 1E Battery Room A Exhaust Fan	0.5 hp	0.5	0.5
41.	360	Containment Recirculation Fan A	200 hp	149	149
42.	360	Containment Recirculation Fan D	200 hp	149	149
43.	360	Non-1E Battery Charger EDS3-DC-1	195 kVA	162.5	162.5
44.	420	Div. A/C Class 1E Battery Room Exhaust Fan A	5 hp	5	5
		Total Automatically Sequenced Loads (kW)		**2956**	**2499.5**

Table 8.3.1-1 (Sheet 4 of 5)
Onsite Standby Diesel Generator ZOS MG 02A Nominal Loads

Manual Loads (Note 2)				
Item No.	**Time Seq. (sec)**	**Event or Load Description**	**Rating (hp/kW)**	**Operating Load (kW)**
45.		Class 1E Div. A Battery Charger 1 (Note 13)	78 kVA	26
46.	--	Class 1E Div. C Battery Charger 1 (Note 13)	78 kVA	26
47.	--	Class 1E Div. C Battery Charger 2	78 kVA	15
48.	--	Supplemental Air Filtration System Fan A	15 hp	15
49.	--	Supplemental Air Filtration System Electric Heater A	20 kW	20
50.	--	Backup Group 4A Pressurizer Heaters	246 kW	246
51.	--	CRDM Fan 01A	75 hp	62
52.	--	CRDM Fan 01B	75 hp	62
53.	--	Spent Fuel Cooling Pump A	250 hp	200
54.	--	Make-Up Pump A	600 hp	498
55.	--	Non-1E Regulating XFMR EDS1-DT-1	100 kVA	70
56.	--	Non-1E Regulating XFMR EDS3-DT-1	100 kVA	70
57.	--	Main Control Room AHU Supply Fan A (Note 11)	40 hp	34
58.	--	Main Control Room AHU Return Fan A (Note 11)	25 hp	21
59.	--	Div A/C Class 1E Electrical Room AHU Supply Fan A (Note 11)	40 hp	34
60.	--	Div A/C Class 1E Electrical Room Return Fan A (Note 11)	25 hp	21

Table 8.3.1-1 (Sheet 5 of 5)
Onsite Standby Diesel Generator ZOS MG 02A Nominal Loads

Manual Loads (Note 2)				
Item No.	**Time Seq. (sec)**	**Event or Load Description**	**Rating (hp/kW)**	**Operating Load (kW)**
61.	--	Div B/D Class 1E Electrical Room AHU Supply Fan D (Note 11)	25 hp	21
62.	--	Div B/D Class 1E Electrical Room Return Fan D (Note 11)	25 hp	21
63.	--	Air Cooled Chiller Pump 2 (Note 11)	20 hp	17
64.	--	Air Cooled Chiller 2 (Note 11)	375 kW	375
65.	--	CVS Pump Room Fan A (Note 11)	1.5 hp	1.5
		Total Manually Sequenced Loads (kW)		**1855.5**

Notes:

1. Loads listed are for diesel generator ZOS MG 02A.
2. Loads identified in the first portion of the table (AUTOMATIC LOADS) will be loaded without operator action. Loads identified in the second portion of the table (MANUAL LOADS) will be energized at operator discretion based on system needs. Automatic loads may not be started until there is a system need. Not all manually sequenced loads will be operated simultaneously.
3. Time Sequence is counted from the time a diesel generator receives the start signal.
4. The "Operating Load" column shows the load input power requirement from the diesel generator.
5. Motor-operated valves (MOVs) pertaining to various systems will be energized on closure of the diesel generator breaker. Normally the MOV power requirement is for a very short duration (a few seconds); hence, the MOV load will not affect the diesel generator capacity rating.
6. On receipt of the diesel generator start signal, the engine accelerates to a set idle speed. The engine operates at the idle speed for a time to allow bearing oil pressure buildup, proper lubrication of the moving parts, and engine warmup. After a set time delay (to be determined based on vendor selection), the engine will ramp up to the rated operating speed.
7. On restoring the power supply to the diesel backed bus ES1 by closing the diesel generator incoming breaker, the associated unit substation ECS EK 11, 12, 13, and 14 load center transformers are energized. The transformers draw magnetizing current and the no load losses (approx. 0.3 percent of the rating) from the bus.
8. Only a part of the building lighting load is automatically connected to the diesel generator bus. The remaining lighting load is connected via manual action at the operator's discretion.
9. Not used.
10. The ‘At Power’ loads are those loads that would be automatically sequenced on the diesel generator following a loss of offsite power and reactor trip from power; i.e., reactor coolant pressure above the residual heat removal system operating pressure. The ‘Shutdown’ loads are those loads that would be automatically sequenced on the diesel generator following a loss of offsite power during a plant shutdown; i.e., reactor coolant pressure below the residual heat removal system operating pressure and the RNS isolation valves open.
11. Air cooled chiller VWS MS 03 is automatically loaded on diesel generator ZOS MG 02B along with the VAS and VBS fans associated with the cooling coils served by this chiller. The redundant air cooled chiller VWS MS 02 and its associated VAS and VBS fans can be manually loaded on diesel generator ZOS MG 02A in case of failures of VWS MS 03 or ZOS MG 02B.
12. Annex building ventilation fans are automatically loaded on diesel generator ZOS MG 02A. The redundant fans can be manually loaded on diesel generator ZOS MG 02B in case of diesel generator or fan failures.
13. To prevent spurious ADS actuation, the 24-hour Class 1E battery chargers should be manually loaded on the diesel generator within 22 hours; before the Automatic Depressurization Actuation (ADS) timer in the Protection and Safety Monitoring System actuates ADS on low battery charger input voltage.

Table 8.3.1-2 (Sheet 1 of 5)
Onsite Standby Diesel Generator ZOS MG 02B Nominal Loads

Automatic Loads (Note 2)					
Item No.	Time Seq. (sec)	Event or Load Description	Rating (hp/kW)	Operating Load (kW)	
				At Power (Note 10)	Shutdown (Note 10)
1.	0	D/G Start Signal is Initiated	-	-	-
2.	TBD	D/G Reaches IDLE Speed (Note 6)	-	-	-
3.	TBD	D/G Reaches Full Speed (Note 6)	-	-	-
4.	120	D/G Breaker Closes, Load Sequencer Starts	-	-	-
5.	120	Load Center Transformer EK21 (Note 7)	2500 kVA	7.5	7.5
6.	120	Load Center Transformer EK22 (Note 7)	2500 kVA	7.5	7.5
7.	120	Load Center Transformer EK24 (Note 7)	2500 kVA	7.5	7.5
8.	120	Annex Bldg Lighting Panels (Note 8)	120 kVA	33	33
9.	120	Radwaste Bldg Lighting Panel (Note 8)	30 kVA	8.5	8.5
10.	120	Aux Bldg Lighting Panels (Note 8)	270 kVA	20.5	20.5
11.	120	Turbine Bldg Lighting Panels (Note 8)	120 kVA	27	27
12.	120	D/G Bldg Lighting Panel (Note 8)	30 kVA	8	8
13.	120	D/G 2B AC/OC Radiator Fan	25 hp	21	21
14.	120	Diesel Oil Transfer Module Unit Heater B	15 kW	15	15
15.	120	Diesel Oil Transfer Module Exhaust Fan B	0.5 hp	0.5	0.5
16.	120	D/G B Jacket Water Radiator Fan	25 hp	21	21

Table 8.3.1-2 (Sheet 2 of 5)
Onsite Standby Diesel Generator ZOS MG 02B Nominal Loads

Automatic Loads (Note 2)					
Item No.	Time Seq. (sec)	Event or Load Description	Rating (hp/kW)	Operating Load (kW)	
				At Power (Note 10)	Shutdown (Note 10)
17.	120	Class 1E Div. B Regulating XFMR 1	45 kVA	15	15
18.	120	Class 1E Div. D Regulating XFMR 1	45 kVA	15	15
19.	120	Motor-Operated Valves (Note 5)	-	-	-
20.	120	D/G B Fuel Oil Transfer Pump	3 hp	3	3
21.	120	D/G B Bldg Stdby Exhaust Fan 1B	3 hp	3	3
22.	120	D/G B Bldg Stdby Exhaust Fan 2B	3 hp	3	3
23.	120	D/G B Bldg. Primary AHU MS 01B Fan	3 hp	3	3
24.	120	D/G B Fuel Oil Cooler Fan	2 hp	2	2
25.	120	Load Center Transformer EK23 (Note 7)	2500 kVA	7.5	7.5
26.	140	Start-up Feed Water Pump B	800 hp	665	0
27.	160	Fuel Oil Day Tank Vault Exhaust Fan B	0.5 hp	0.5	0.5
28.	160	Diesel Fuel Oil Transfer Heater B	90 kW	90	90
29.	160	Service Water Pump B	500 hp	350	350
30.	180	Service Water Cooling Tower Cell Fan B	175 hp	120	120
31.	180	Main Control Room AHU Supply Fan B	40 hp	34	34
32.	180	Main Control Room AHU Return Fan B	25 hp	21	21
33.	180	Div. B/D Class 1E Electrical Room AHU Supply Fan B	25 hp	21	21

Table 8.3.1-2 (Sheet 3 of 5)
Onsite Standby Diesel Generator ZOS MG 02B Nominal Loads

Automatic Loads (Note 2)					
Item No.	Time Seq. (sec)	Event or Load Description	Rating (hp/kW)	Operating Load (kW)	
				At Power (Note 10)	Shutdown (Note 10)
34.	180	Div B/D Class 1E Electrical Room Return Fan B	25 hp	21	21
35.	180	Div A/C Class 1E Electrical Room AHU Supply Fan C	40 hp	34	34
36.	180	Div A/C Class 1E Electrical Room Return Fan C	25 hp	21	21
37.	180	Air Cooled Chiller Pump 3	20 hp	17	17
38.	200	Component Cooling Water Pump B	800 hp	580	580
39.	220	Air Cooled Chiller 3	375 kW	375	375
40.	240	CVS Pump Room Fan B	1.5 hp	1.5	1.5
41.	240	Instrument Air Compressor B	250 hp	185	185
42.	240	Instrument Air Dryer Package B	0.008 kW	0.008	0.008
43.	300	Normal Residual Heat Removal Pump B	250 hp	0	207
44.	300	RNS Pump Room Fan B	1.5 hp	0	1.5
45.	300	Non-1E Battery Charger EDS2-DC-1	195 kVA	162.5	162.5
46.	300	Non-1E Battery Room B Exhaust Fan 09B	0.5 hp	0.5	0.5
47.	360	Containment Recirculation Fan B	200 hp	149	149
48.	360	Containment Recirculation Fan C	200 hp	149	149
49.	360	Non-1E Battery Charger EDS4-DC-1	195 kVA	162.5	162.5
50.	420	Div. B/D Class 1E Battery Room Exhaust Fan B	1.5 hp	1.5	1.5
		Total Automatically Sequenced Loads (kW)		**3389.5**	**2933**

Table 8.3.1-2 (Sheet 4 of 5)
Onsite Standby Diesel Generator ZOS MG 02B Nominal Loads

Manual Loads (Note 2)				
Item No.	**Time Seq. (sec)**	**Event or Load Description**	**Rating (hp/kW)**	**Operating Load (kW)**
51.	--	Class 1E Div. B Battery Charger 1	78 kVA	26
52.	--	Class 1E Div. B Battery Charger 2	78 kVA	15
53.	--	Class 1E Div. D Battery Charger 1	78 kVA	26
54.	--	Supplemental Air Filtration System Fan B	15 hp	15
55.	--	Supplemental Air Filtration System Electric Heater B	20 kW	20
56.	--	Backup Group 4B Pressurizer Heaters	246 kW	246
57.	--	CRDM Fan 01C	75 hp	62
58.	--	CRDM Fan 01D	75 hp	62
59.	--	Spent Fuel Cooling Pump B	250 hp	200
60.	--	Make-Up Pump B	600 hp	498
61.	--	Non-1E Regulating XFMR EDS2-DT-1	100 kVA	70
62.	–	Non-1E Regulating XFMR EDS4-DT-1	100 kVA	70
63.	--	Annex Bldg Equipment Room Return/Exhaust Fan B	20 hp	17
64.	--	Annex Bldg Equipment Room AHU MS02B Fan	50 hp	42
65.	--	Annex Bldg Swgr Rm AHU MS 05B Fan	50 hp	42
66.	--	Annex Bldg Swgr Rm Ret/Exhaust Fan 06B	25 hp	21
		Total Manually Sequenced Loads (kW)		**1432**

Table 8.3.1-2 (Sheet 5 of 5)
Onsite Standby Diesel Generator ZOS MG 02B Nominal Loads

Notes:

1. Loads listed are for diesel generator ZOS MG02B.
2. Loads identified in the first portion of the table (AUTOMATIC LOADS) will be loaded without operator action. Loads identified in the second portion of the table (MANUAL LOADS) will be energized at operator discretion based on system needs. Automatic loads may not be started until there is a system need. Not all manually sequenced loads will be operated simultaneously.
3. Time Sequence is counted from the time a diesel generator receives the start signal.
4. The "Operating Load" column shows the load input power requirement from diesel generator.
5. Motor-operated valves (MOVs) pertaining to various systems will be energized on closure of the diesel generator breaker. Normally the MOV power requirement is for a very short duration (few seconds); hence the MOV load will not affect the diesel generator capacity rating.
6. On receipt of the diesel generator start signal, the engine accelerates to a set idle speed. Engine operates at the idle speed for a time period to allow bearing oil pressure build up, proper lubrication of the moving parts, and engine warmup. After a set time delay (to be determined based on vendor selection), the engine will ramp up to the rated operating speed.
7. On restoring the power supply to the diesel backed bus ES2 by closing diesel generator incoming breaker, the associated unit substation ECS EK 21, 22, 23, and 24 load center transformers are energized. The transformers draw magnetizing current and the no load losses (approx. 0.3 percent of the rating) from the bus.
8. Only a part of the building lighting load is automatically connected to the diesel generator bus. The remaining lighting load is connected via manual action at the operator's discretion.
9. Not used.
10. The ‘At Power’ loads are those loads that would be automatically sequenced on the diesel generator following a loss of offsite power and reactor trip from power; i.e., reactor coolant pressure above the residual heat removal system operating pressure. The ‘Shutdown’ loads are those loads that would be automatically sequenced on the diesel generator following a loss of offsite power during a plant shutdown; i.e., reactor coolant pressure below the residual heat removal system operating pressure and the RNS isolation valves open.
11. Air cooled chiller VWS MS 03 is automatically loaded on diesel generator ZOS MG 02B along with the VAS and VBS fans associated with the cooling coils served by this chiller. The redundant air cooled chiller VWS MS 02 and its associated VAS and VBS fans can be manually loaded on diesel generator ZOS MG 02A in case of failures of VWS MS 03 or ZOS MG 02B.
12. Annex building ventilation fans are automatically loaded on diesel generator ZOS MG 02A. The redundant fans can be manually loaded on diesel generator ZOS MG 02B in case of diesel generator or fan failures.
13. To prevent spurious ADS actuation, the 24-hour Class 1E battery chargers should be manually loaded on the diesel generator within 22 hours, before the Automatic Depressurization Actuation (ADS) timer in the Protection and Safety Monitoring System actuates ADS on low battery charger input voltage.

Table 8.3.1-3
Component Data - Main AC Power System
(Nominal Values)

1.	**Main Stepup Transformer**	
		3 single phase, FOA, 65°C rise, liquid filled
2.	**Unit Auxiliary Transformers (UAT 2A/2B)**	
		3 phase, 3 winding H = 76 MVA, OA, 65°C X = 38 MVA, OA, 65°C Y = 38 MVA, OA, 65°C
	Unit Auxiliary Transformer (UAT 2C)	
		3 phase, 2 winding 33 MVA, OA, 65°C
	Reserve Auxiliary Transformers (RAT)	
		3 phase, 3 winding H = 76 MVA, OA, 65°C X = 38 MVA, OA, 65°C Y = 38 MVA, OA, 65°C
3.	**6.9 kV Switchgear**	
		medium voltage metal-clad switchgear Interrupting current rating – 63kA vacuum-type circuit breaker
4.	**480 V Load Centers**	
	Transformers - Indoor, Air-Cooled Ventilated Dry-Type, Fire Retardant:	2500 kVA, AA 3 phase, 60 Hz 6900 - 480 V
		3000/4000 kVA, AA/FA (Load Centers 31 and 41) 3 phase, 60 Hz 6900 - 480 V
		1500 kVA, AA (Load Center 71) 3 phase, 60 Hz 6900 - 480 V
	Main Bus Ampacity	4000 amperes continuous
		5000 amperes continuous (Load Centers 31 and 41)
		3200 amperes continuous (Load Center 71)
	480V Breakers	metal enclosed draw-out circuit breaker or motor-starter (contactor) 65,000 A RMS symmetrical interrupting rating
5.	**480 V Motor Control Centers**	
	Horizontal Bus	800 A and 1200 A continuous rating 65,000 A RMS symmetrical bracing
	Vertical Bus	300 A continuous rating
		65,000 A RMS symmetrical bracing
	Breakers (molded case)	65,000 A RMS symmetrical interrupting rating

Table 8.3.1-4
Post-72 Hours Nominal Load Requirements

Item No.	Description of Loads	Ancillary AC Generator 1	Ancillary AC Generator 2
		Load (kW)	Load (kW)
1.	Post-Accident Monitoring (PAM) Emergency and Panel Lighting (Division B) in Main Control Room and ancillary fans		6.5
2.	Post-Accident Monitoring (PAM) Emergency and Panel Lighting (Division C) in Main Control Room and ancillary fans	6.5	
3[a]	PCS Recirculation Pumps	19.3	19.3
4.	Ancillary Generator Room Lights	0.5	0.5
5.	Ancillary Generator Fuel Tank Heater	1.25 kW	1.25 kW
	Total	27.55 kW	27.55 kW

Note:

a. There are two PCS pumps; however, only one pump will be operating at any point in time on each generator. In case of fire fighting, two pumps (one on each generator) may be used.

Table 8.3.1-5
Indication and Alarm Points
Standby Diesel Generators

Parameter	Indication		Alarm	
	Control Room	Local	Control Room	Local
Lube Oil Pressure Low	No	Yes	Yes	Yes
Lube Oil Temperature High	No	Yes	Yes	Yes
Lube Oil Sump Level Low	No	Yes	No	Yes
Cooling Water Temperature High	Yes	Yes	Yes	Yes
Cooling Water Pressure Low	No	Yes	Yes	Yes
DG Starting Air Pressure Low	Yes	Yes	Yes	Yes

Table 8.3.2-1
250V DC Class 1E Division A Battery
Nominal Load Requirements

Load Description	Power Required (kW)	
	Momentary	**Continuous**
Bus IDSA DS 1 (24 hr Battery Bank)		
Inverter		
Protection and Safety Monitoring System	0	10.6
Emergency Lighting	0	0.3
Containment High Range Monitor	0	0.1
Subtotal	0	11.0
250 Vdc Panel		
Reactor Trip Swgr & Solenoid Valves	7	0.5
250 Vdc MCC		
Motor-operated Valves	453	
Total	460	11.5

Table 8.3.2-2
250V DC Class 1E Division B Battery
Nominal Load Requirements

Load Description	Power Required (kW)	
	Momentary	**Continuous**
Bus IDSB DS 1 (24 hr Battery Bank)		
Inverter		
Protection and Safety Monitoring System	0	10.1
Emergency Lighting and Panel Lighting	0	0.5
Subtotal	0	10.6
250 Vdc Panel		
Reactor Trip Swgr, RCP Trip & Solenoid Valves	12	0.8
250 Vdc MCC		
Motor-operated Valves	290	
Total	302	11.4
BUS IDSB DS 2 (72 hr Battery Bank)		
Inverter		
Protection and Safety Monitoring System	0	3.15
Emergency Lighting and Panel Lighting	0	0.63
Containment High Range Monitor	0	0.12
MCR Supply Duct Radiation Monitor	1.8	0.24
Total	1.8	4.14

Table 8.3.2-3
250V DC Class 1E Division C Battery
Nominal Load Requirements

Load Description	Power Required (kW)	
	Momentary	**Continuous**
Bus IDSC DS 1 (24 hr Battery Bank)		
Inverter		
Protection and Safety Monitoring System	0	10.1
Emergency Lighting and Panel Lighting	0	0.5
Subtotal	0	10.6
250 Vdc Panel		
Reactor Trip Swgr, RCP Trip & Solenoid Valves	12	0.5
250 Vdc MCC		
Motor-operated Valves	173	
Total	185	11.1
BUS IDSC DS 2 (72 hr Battery Bank)		
Inverter		
Protection and Safety Monitoring System	0	3.15
Emergency Lighting and Panel Lighting	0	0.63
Containment High Range Monitor	0	0.12
MCR Supply Duct Radiation Monitor	1.8	0.24
Total	1.8	4.14

Table 8.3.2-4
250V DC Class 1E Division D Battery
Nominal Load Requirements

Load Description	Power Required (kW)	
	Momentary	**Continuous**
Bus IDSD DS 1 (24 hr Battery Bank)		
Inverter		
Protection and Safety Monitoring System	0	10.6
Emergency Lighting	0	0.3
Containment High Range Monitor	0	0.1
Subtotal	0	11.0
250 Vdc Panel		
Reactor Trip Swgr & Solenoid Valves	6	0.8
250 Vdc MCC		
Motor-operated Valves	380	
Total	386	11.8

Table 8.3.2-5
Component Data - Class 1E DC System
(Nominal Values)

a.	**Battery Bank** 250 Vdc (2 - 125 Vdc) 60 lead calcium cells, 2400 Ah. (8 hrs to 1.75 V per cell @ 77°F).
b.	**Charger** AC input - 480 V, 3-phase, 60 Hz; dc output - 250 Vdc, 200 A continuous; float voltage 2.20 to 2.25 V/cell; equalizing charge voltage 2.33 V/cell.
c.	**Switchboard** Main bus 600 A continuous, 50,000 A short circuit bracing; fuse disconnect switch 50,000 A interrupting rating, continuous ratings 200 and 400 A.
d.	**Spare Switchboard** Main bus 1200 A continuous, 50,000 A short circuit bracing; fuse disconnect switch, 50,000 A interrupting rating, continuous rating 1200 A.
e.	**Motor Control Center** Main bus 300 A continuous, vertical bus 300 A continuous, 50,000 A short circuit bracing.
f.	**Spare Battery Bank** 2-125V dc 60 lead calcium cells, 2400 Ah. (8 hrs to 1.75 V per cell @ 77°F).
g.	**Spare Charger** AC input - 480 V, 3-phase, 60 Hz; dc output - 250 Vdc, 200 A continuous; float voltage 2.20 to 2.25 V/cell; equalizing charge voltage - 2.33 V/cell.
h.	**Uninterruptible Power Supply (UPS)** i. Inverter 15 kVA with 250 Vdc input and 208Y/120 Vac, 3-phase, 4-wire, 60 Hz output; ac output voltage regulation of ±2% steady state; output frequency variation within 0.5% of nominal 60 Hz. ii. Voltage Regulating Transformer 45 kVA, 480 V - 208Y/120V, 3-phase, 4-wire.

Note:
Refer to Figures 8.3.2-1 and 8.3.2-2 for the system component configuration.

Table 8.3.2-6 (Sheet 1 of 3)
Component Data - Non-Class 1E DC System EDS1 – EDS4
(Nominal Values)

a.	**Battery Bank** 125 Vdc 60 lead calcium cells, minimum 3500 Ah. (8 hrs to 1.75 V per cell @ 77°F).
b.	**Charger** AC input - 480 V, 3-phase, 60 Hz; dc output - 125 Vdc, 1000 A continuous; float voltage - 2.20 to 2.25 V/cell; equalizing charge voltage - 2.33 V/cell.
c.	**Switchgear** Main bus 3000 A continuous, 40,000 A short circuit bracing; breaker 3000A frame size.
d.	**Uninterruptible Power Supply (UPS)** i. Inverter 75 kVA with 125 Vdc input and 208 Y/120 Vac, 3-phase, 4-wire, 60 Hz output; ac output voltage regulation of ±2% steady state; output frequency variation within 0.5% of nominal 60 Hz. ii. Voltage Regulating Transformer 100 kVA, 480 V - 208 Y/120 V, 3-phase, 4-wire.

Note:
Refer to Figure 8.3.2-3 for the system component configuration.

Table 8.3.2-6 (Sheet 2 of 3)
Component Data - Non-Class 1E DC System EDS5
(Nominal Values)

a.	**Battery Bank** 250 Vdc (2 - 125 Vdc) 60 lead calcium cells, minimum 3500 Ah. (8 hrs to 1.75 V per cell @ 77°F).
b.	**Charger** AC input - 480 V, 3-phase, 60 Hz; dc output - 250 Vdc, 200 A continuous; float voltage - 2.20 to 2.25 V/cell; equalizing charge voltage - 2.33 V/cell.
c.	**Switchgear** Main bus 3000 A continuous, 40,000 A short circuit bracing; breaker 3000 A frame size.

Note:
Refer to Figure 8.3.2-3 for the system component configuration.

Table 8.3.2-6 (Sheet 3 of 3)
Component Data - Non-Class 1E DC System EDSS
(Nominal Values)

a.	**Spare Battery Bank** 250 Vdc (2 - 125 Vdc) 60 lead calcium cells, minimum 3500 Ah. (8 hrs to 1.75 V per cell @ 77°F).
b.	**Spare Charger - 1** AC input - 480 V, 3-phase, 60 Hz; dc output - 125 Vdc, 1000 A continuous; float voltage - 2.20 to 2.25 V/cell; equalizing charge voltage - 2.33 V/cell.
c.	**Spare Charger - 2** AC input - 480 V, 3-phase, 60 Hz; dc output - 125 Vdc, 1000 A continuous; float voltage - 2.20 to 2.25 V/cell; equalizing charge voltage - 2.33 V/cell.

Note:
Refer to Figure 8.3.2-3 for the system component configuration.

Table 8.3.2-7 (Sheet 1 of 4)
Class 1E 250V DC and Class 1E Uninterruptible Power Supplies
Failure Modes and Effects Analysis

Item No.	Description of Components	Safety Function	Plant Operating Mode	Failure Mode(s)	Method of Failure Detection	Failure Effect on System Safety Function Capability	General Remarks
1.	Battery Charger Division A, IDSA DC 1 Division B, IDSB DC 1, 2 Division C, IDSC DC 1, 2 Division D, IDSD DC 1	Provide dc power when ac power available and maintain battery in a charged condition.	A,B	No output	Annunciator in main control room; battery charger failure alarm for ac power failure, dc output under/ over voltage, dc no charge, and input/output breaker open.	None; Battery can provide power for 24 and 72 hours without charger; other divisions available. Spare battery charger available for connection.	Failure of only one div. chgr. falls into single failure criteria and the other three div. are still available.
			C	No input	Same as above.	None; Battery can provide power for 24 and 72 hours without charger.	This component inoperable during blackout.
2.	Battery Division A, IDSA DB 1A,1B Division B, IDSB DB 1A,1B,2A,2B Division C, IDSC DB 1A,1B,2A,2B Division D, IDSD DB 1A,1B	Backup to battery charger during load cycling (in-rush current) and provide dc power for 24 and 72 hours without battery charger.	A,B	No output or low voltage	Battery monitor provides annunciation in main control room; switchboard failure alarm in main control room for ground detection and bus undervoltage.	None; Battery chargers (item 1) available; other divisions available. Spare battery available for connection.	Power still available with a single ground. Loss of entire battery function is single failure and the other divisions are available.
			C	No output or low voltage	Same as above.	None; Other divisions available; spare battery available.	
3.	Fused transfer switch box Division A, IDSA DF 1 Division B, IDSB DF 1,2 Division C, IDSC DF 1,2 Division D, IDSD DF 1	Provide circuit continuity and protection between Item 2 battery and Item 4 switchboard.	A,B,C	Inadvertent opening (blown fuse)	Switchboard failure alarm in main control room for ground detection and bus undervoltage.	None; Other divisions available.	

Table 8.3.2-7 (Sheet 2 of 4)
Class 1E 250V DC and Class 1E Uninterruptible Power Supplies
Failure Modes and Effects Analysis

Item No.	Description of Components	Safety Function	Plant Operating Mode	Failure Mode(s)	Method of Failure Detection	Failure Effect on System Safety Function Capability	General Remarks
4.	250V DC Switchboard Division A, IDSA DS 1 Division B, IDSB DS 1,2 Division C, IDSC DS 1,2 Division D, IDSD DS 1	Distribute power via fusible disconnects to loads from chargers and battery.	A,B,C	Bus ground fault	Switchboard failure alarm in main control room for ground detection and bus undervoltage.	None; Other divisions available.	
5.	Fusible disconnect Division A, for Charger 1 Division B, for Charger 1,2 Division C, for Charger 1,2 Division D, for Charger 1	Provide circuit continuity and protection between Item 1 and 4.	A,B	Inadvertent opening (blown fuse)	Alarm in main control room for charger failure (dc no charge).	None; Battery can provide power for 24 and 72 hours without chargers. Other divisions available.	
			C	Inadvertent opening (blown fuse)	Same as above.	None; Battery can provide power for 24 and 72 hours without chargers.	
6.	Fusible disconnect Division A, for Inverter 1 Division B, for Inverter 1,2 Division C, for Inverter 1,2 Division D, for Inverter 1	Provide circuit continuity and protection between Item 4 switchboard and Item 9 inverters.	A,B,C	Inadvertent opening (blown fuse)	Inverter trouble alarm in main control room for loss of dc input, loss of ac output, input, output and backup power supply breaker open.	None; System safety function can be met with loss of one division.	
7.	Fusible disconnect for DC MCC Division A Division B Division C Division D	Provide circuit continuity and protection between Item 4 switchboard and Item 13 DC MCC.	A,B,C	Inadvertent opening (blown fuse)	DC MCC trouble alarm in main control room for bus undervoltage.	None; Other divisions available.	

Table 8.3.2-7 (Sheet 3 of 4)
Class 1E 250V DC and Class 1E Uninterruptible Power Supplies
Failure Modes and Effects Analysis

Item No.	Description of Components	Safety Function	Plant Operating Mode	Failure Mode(s)	Method of Failure Detection	Failure Effect on System Safety Function Capability	General Remarks
8.	Fusible disconnect for DC dist panel Division A Division B Division C Division D	Provide circuit continuity and protection between Item 4 switchboard and Item 14 dc panel.	A,B,C	Inadvertent opening (blown fuse)	DC dist. panel trouble alarm in main control room for bus undervoltage.	None; Other divisions available.	
9.	Inverter Division A, IDSA DU 1 Division B, IDSB DU 1,2 Division C, IDSC DU 1,2 Division D, IDSD DU 1	Convert 250V DC to 208Y/120V AC and provide 120V AC power.	A,B,C	No output	Alarm in main control room for common UPS trouble, for loss of dc input, loss of ac output; input, output and backup power supply breakers open.	None; System safety function can be met with loss of one division.	
10.	Voltage regulating transformer Division A, IDSA DT 1 Division B, IDSB DT 1 Division C, IDSC DT 1 Division D, IDSD DT 1	Backup to inverter (Item 9) when it is bypassed for maintenance or malfunction (local manual switching at inverter).	A,B	No output	Alarm in main control room for input and output power supply breakers open. And bus undervoltage.	None; Other divisions available.	For single failure analysis: These components are redundant to Item 1. These components are redundant to Item 9.
			C	No input	Bus undervoltage.	None	This component cannot function during blackout.
11.	208Y/120V AC distr. panel Division A, IDSA EA 1 Division B, IDSB EA 1,3 Division C, IDSC EA 1,3 Division D, IDSD EA 1	Distribute power via breakers to loads	A,B,C	Ground and bus fault	Alarm in main control room for undervoltage.	None; System safety function can be met with loss of one division.	

Table 8.3.2-7 (Sheet 4 of 4)
Class 1E 250V DC and Class 1E Uninterruptible Power Supplies
Failure Modes and Effects Analysis

Item No.	Description of Components	Safety Function	Plant Operating Mode	Failure Mode(s)	Method of Failure Detection	Failure Effect on System Safety Function Capability	General Remarks
12.	208Y/120V AC Distr. Panel Div. A, IDSA EA 2 Div. B, IDSB EA 2 Div. C, IDSC EA 2 Div. D, IDSD EA 2	Backup to invertor (Item 9) when it is bypassed for maintenance or malfunction (local manual switching at inverter).	A,B	Ground and bus fault	Alarm in main control room for bus undervoltage.	None; Other divisions available.	
			C	No input	Bus under voltage.	None	This component cannot function during blackout.
13.	DC MCC DIV. A, IDSA DK 1 DIV. B, IDSB DK 1 DIV. C, IDSC DK 1 DIV. D, IDSD DK 1	Distribute power via fusible disconnect to loads.	A,B,C	Ground and bus fault	MCC trouble alarm per MCC in main control room for bus undervoltage and ground detection.	None; Other divisions available.	Power still available with a single ground.
14.	DC Distr. Panel Div. A, IDSA DD1 Div. B, IDSB DD1 Div. C, IDSC DD1 Div. D, IDSD DD1	Distribute power via fusible disconnect to loads.	A,B,C	Ground and bus fault	Panel trouble alarm per panel in main control room for bus undervoltage and ground detection.	None; Other divisions available.	Power still available with a single ground.

- Plant operating modes are represented as follows:

  A – Normal or preferred power available.
  B – Loss of normal power and loss of preferred power and onsite standby diesel generator available.
  C – Blackout (loss of all ac systems, except 208Y/120-V AC UPS system).

  System success criteria are as follows:

  250-V DC System – Three out of four (Division A, B, C or D) divisions required.
  208Y/120-V AC UPS System – Three out of four divisions required.

- The failure of any one fusible disconnect or opening of one circuit breaker under a fault condition results in only the loss of the associated division. The other redundant divisions still remain available.

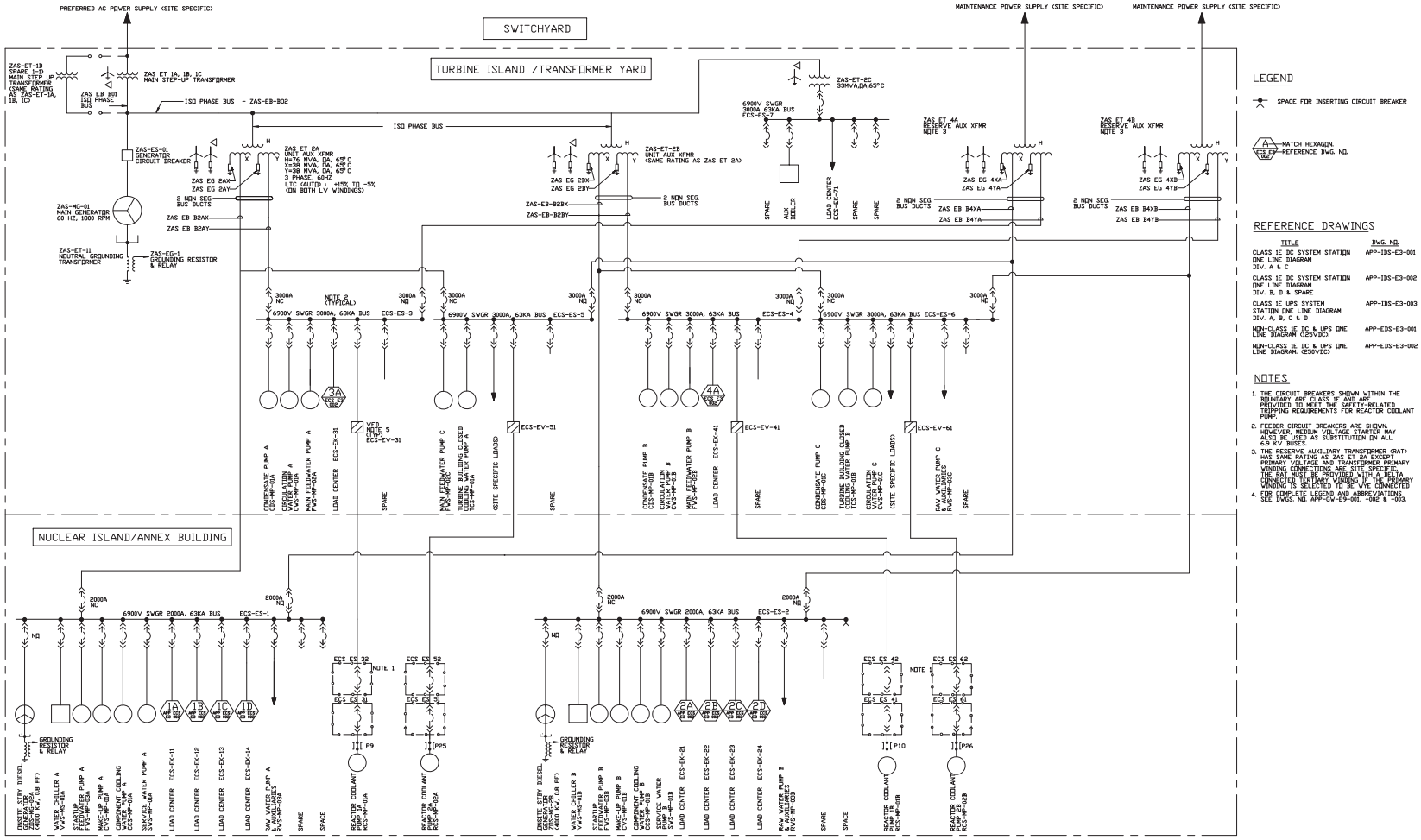

Figure 8.3.1-1
AC Power Station One Line Diagram

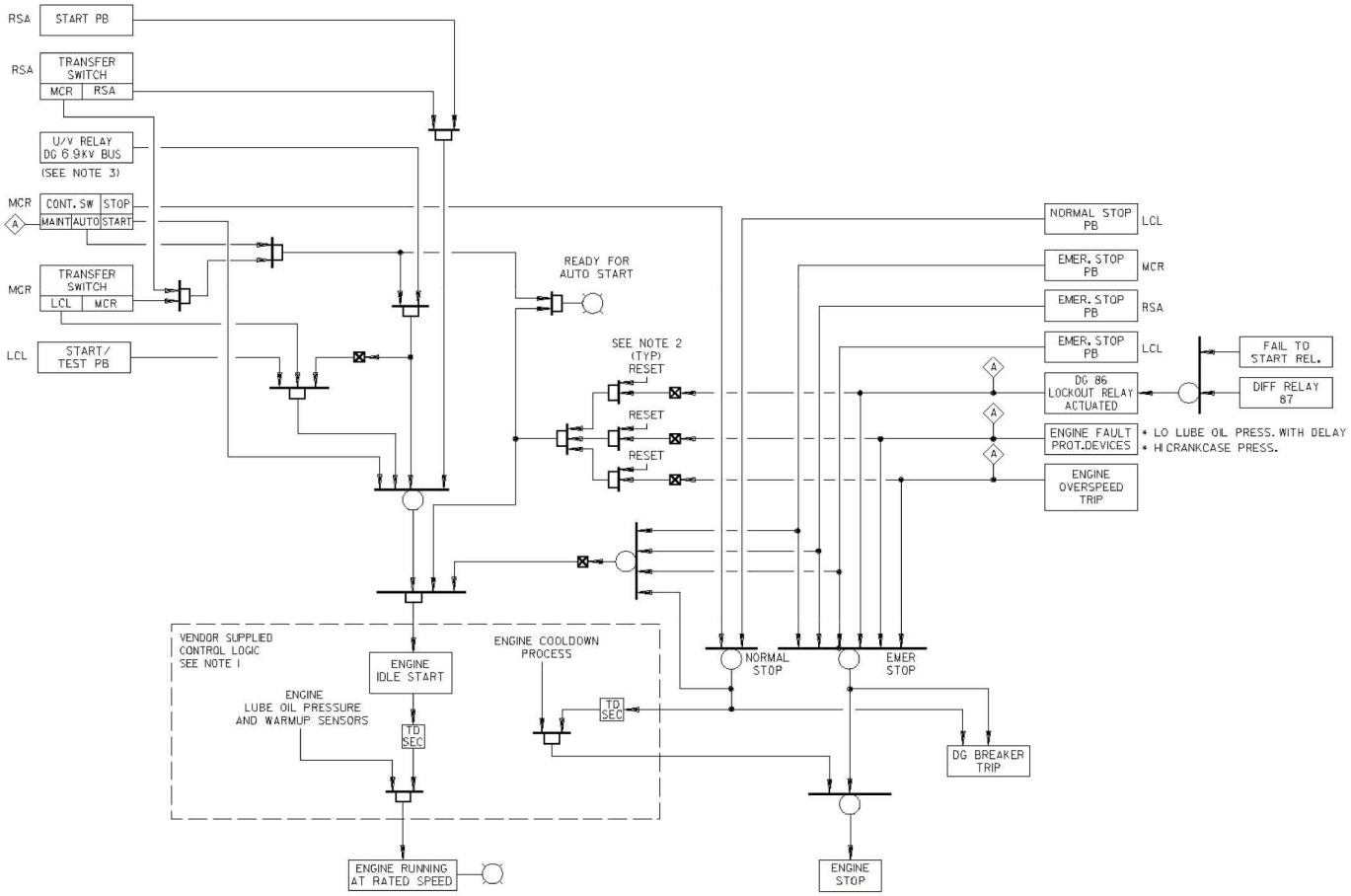

Figure 8.3.1-2
Onsite Standby Diesel Generator Initiating Circuit Logic Diagram

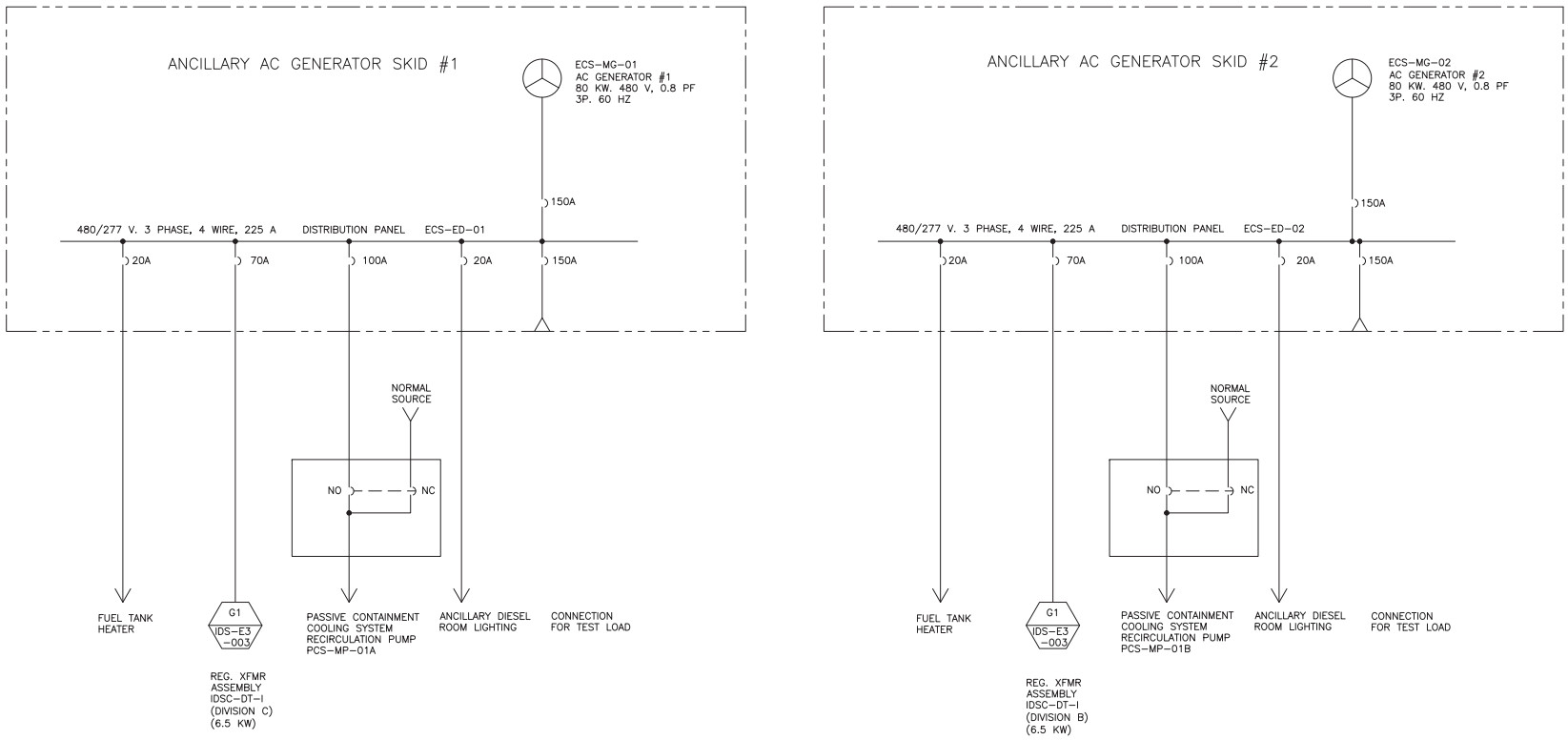

Figure 8.3.1-3
Ancillary Diesel Generator One Line Diagram

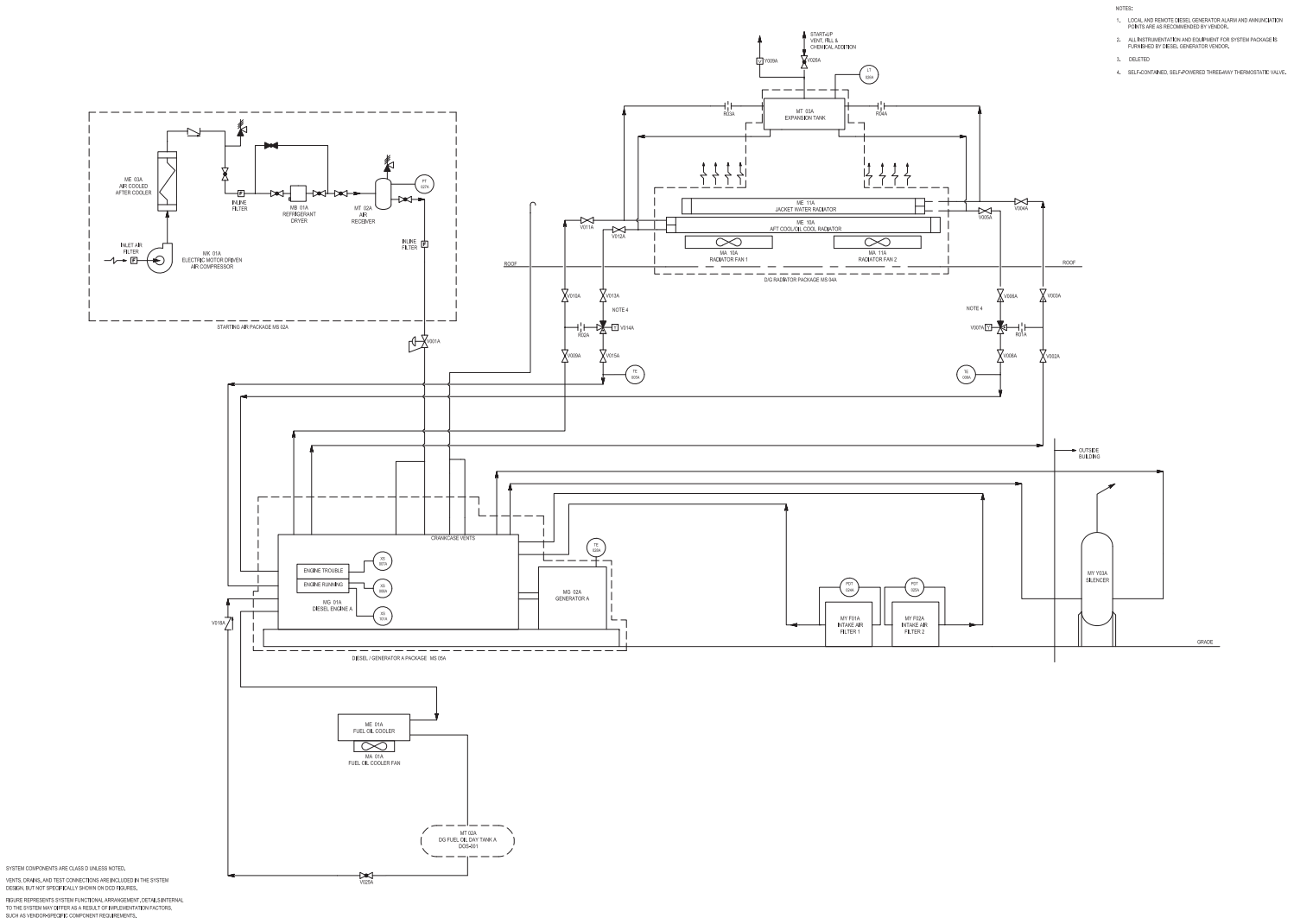

Inside Diesel Generator Building
Figure 8.3.1-4 (Sheet 1 of 2)
Simplified Diesel Generator System Piping and Instrumentation Diagram
(REF) ZOS 001

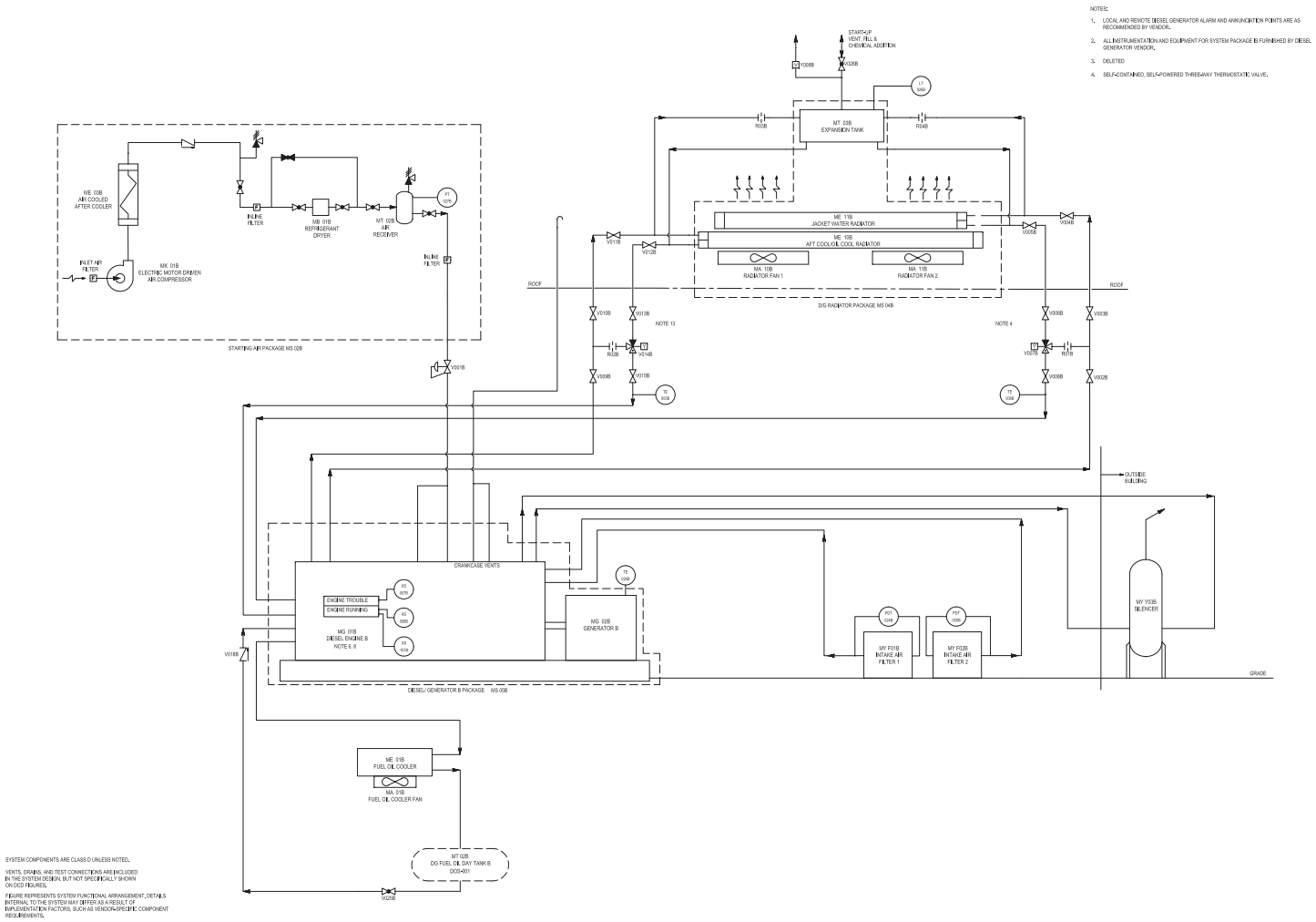

Inside Diesel Generator Building
Figure 8.3.1-4 (Sheet 2 of 2)
Simplified Diesel Generator System Piping and Instrumentation Diagram
(REF) ZOS 002

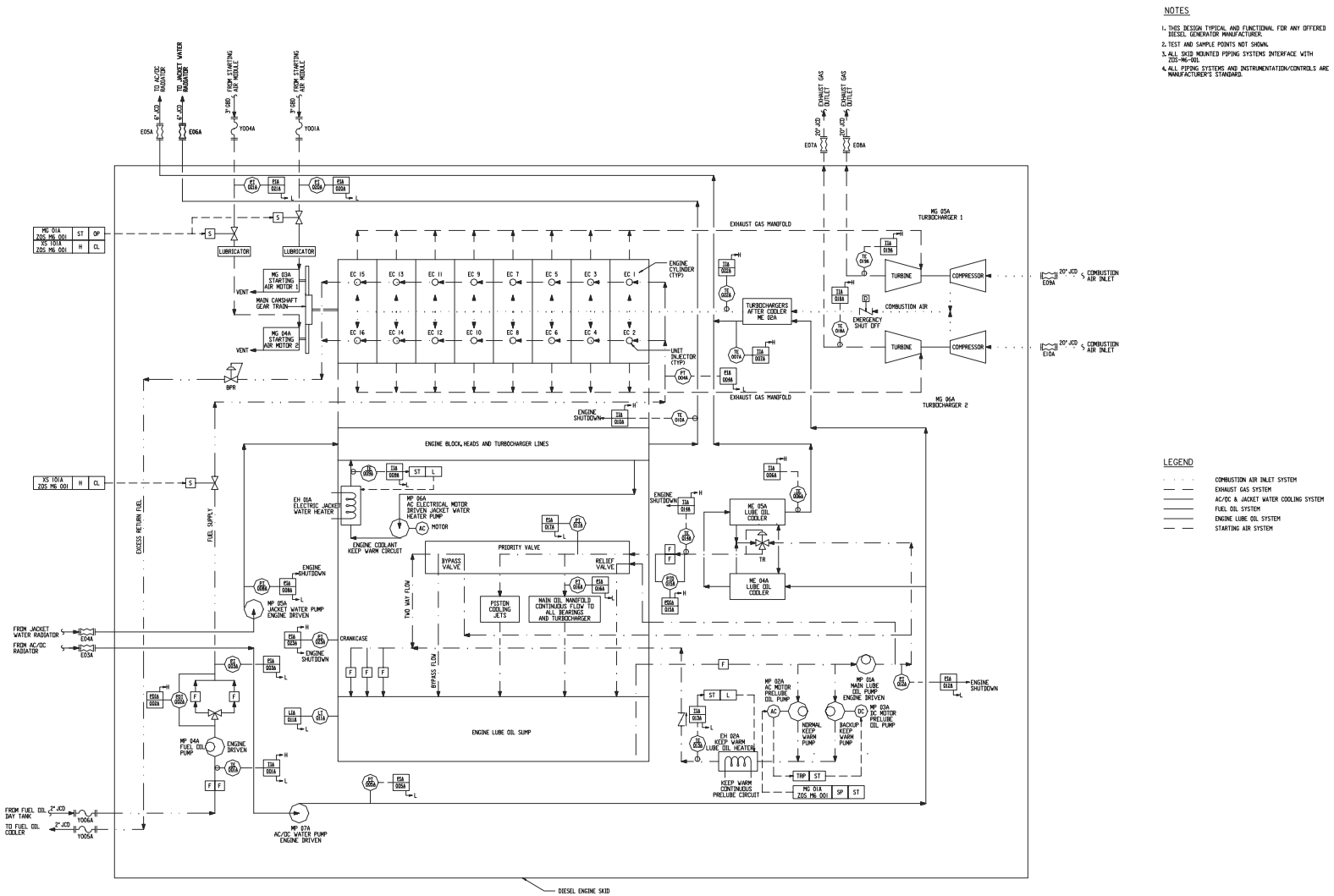

Inside Diesel Generator Building

Figure 8.3.1-5 (Sheet 1 of 2)

Diesel Engine Skid Mounted System

(REF) ZOS K001

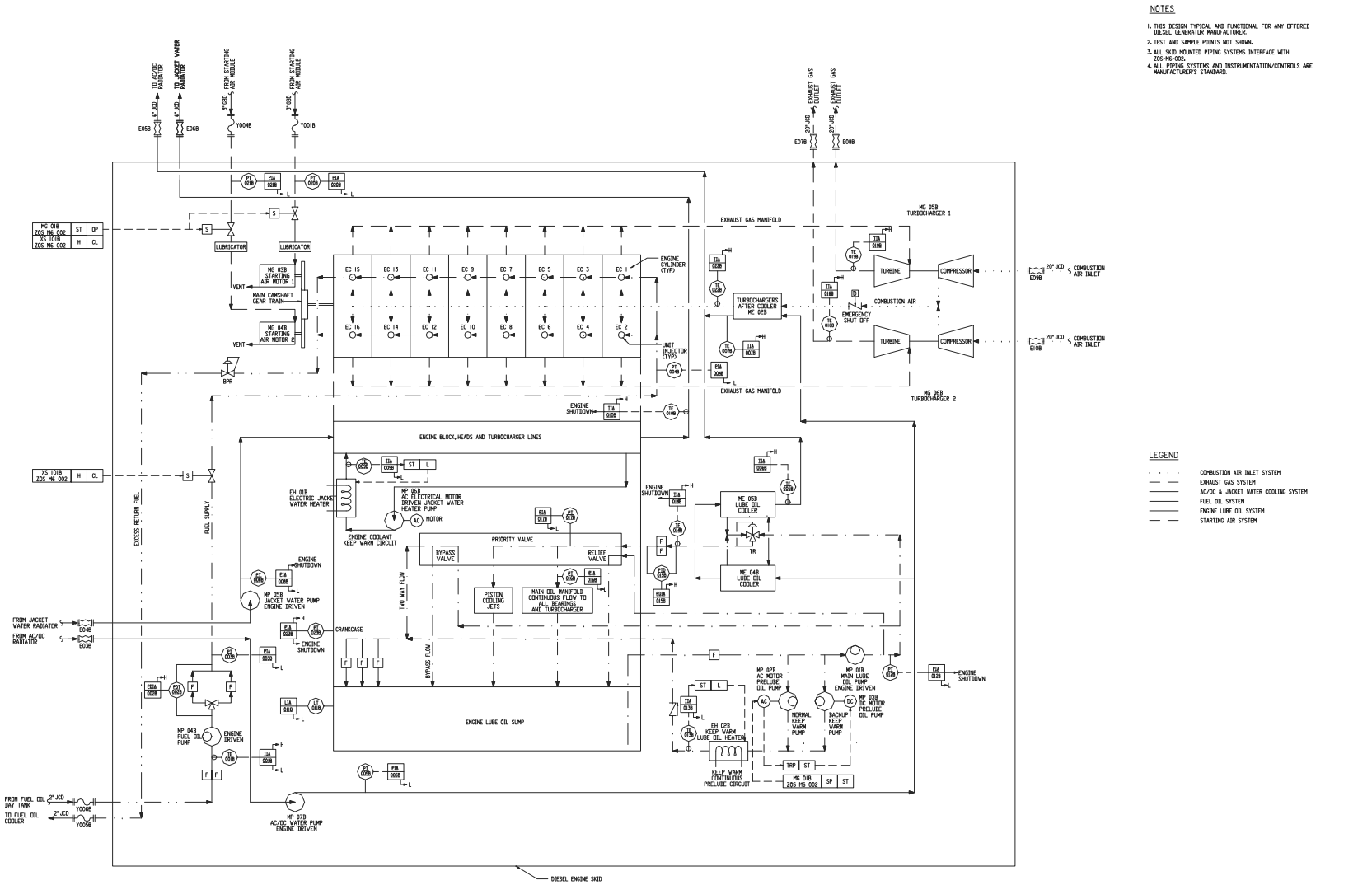

Inside Diesel Generator Building

Figure 8.3.1-5 (Sheet 2 of 2)

Diesel Engine Skid Mounted System

(REF) ZOS K002

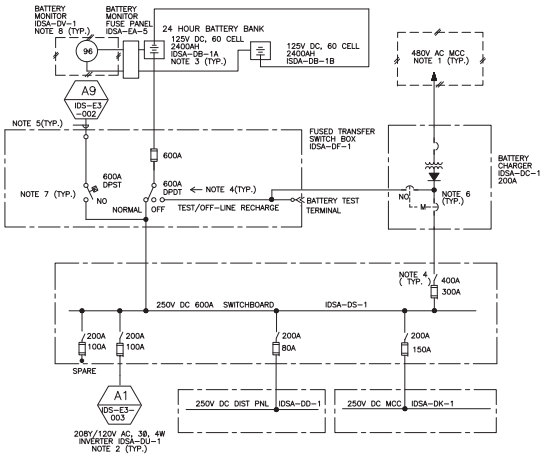

24 HOUR BATTERY BANK (DIVISION A)

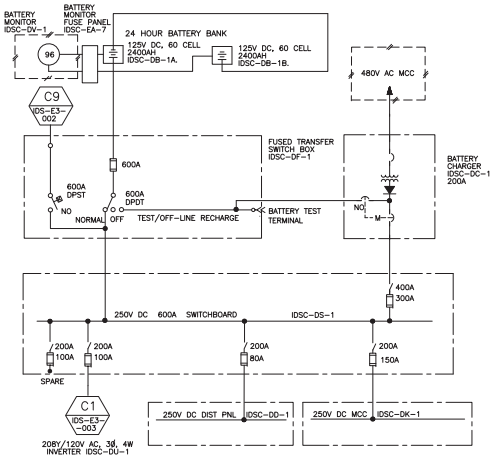

24 HOUR BATTERY BANK (DIVISION C)

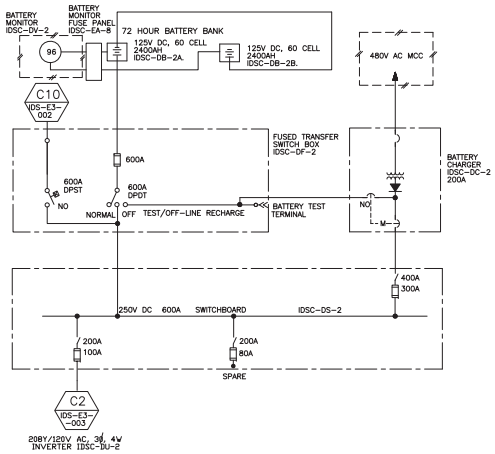

72 HOUR BATTERY BANK (DIVISION C)

NOTES

1. 480V AC INPUT POWER TO BATTERY CHARGERS IS PROVIDED FROM ONSITE STANDBY DIESEL GENERATOR BACKED MCC.
2. SEE DWG. NO. IDS-E3-003 FOR UPS CONFIGURATION.
3. BATTERY AMPERE-HOUR RATING IS BASED ON 8 HOURS DISCHARGE RATE.
4. ALL FUSIBLE DISCONNECT SWITCHES ARE RATED FOR 50 KA SHORT CIRCUIT RATING. THE 1200A SWITCH RATING IS CAPABLE OF CARRYING 2400A FOR UP TO 2 HOURS.
5. SPARE CLASS 1E BATTERY BANK WITH SPARE CLASS 1E BATTERY CHARGER IS UTILIZED FOR CLASS 1E DC SYSTEM AS A TEMPORARY REPLACEMENT FOR ANY 24 HR OR 72 HR BATTERY BANK ONE AT A TIME.
6. MECHANICAL INTERLOCKED IS PROVIDED TO PREMIT CLOSING ONLY ONE CIRCUIT BREAKER AT A TIME.
7. KIRK-KEY INTERLOCK SWITCH IS PROVIDED TO PREVENT TRANSFER OPERATION OF MORE THAN ONE SWITCHBOARD AT A TIME.
8. FOR LEGEND AND ABBREVIATION, SEE DWGS GW-E9-001, -002 AND -003.

REFERENCE DRAWINGS

TITLE	DWG. NO.
AC POWER SYSTEM – STATION ONE LINE DIAGRAMS	FIG 8.3.1-1
CLASS 1E DC SYSTEM – STATION ONE LINE DIAGRAM DIV. B, D & SPARE	FIG 8.3.2-1 (SHT 2)
CLASS 1E UPS SYSTEM– STATION ONE LINE DIAGRAM DIV A,B,C & D	FIG 8.3.2-2
CLASS 1E DC SYSTEM ONE LINE METER & RELAY DIAGRAMS	IDS-E3-004 THRU 010

Figure 8.3.2-1 (Sheet 1 of 2)
Class 1E DC System One Line Diagram

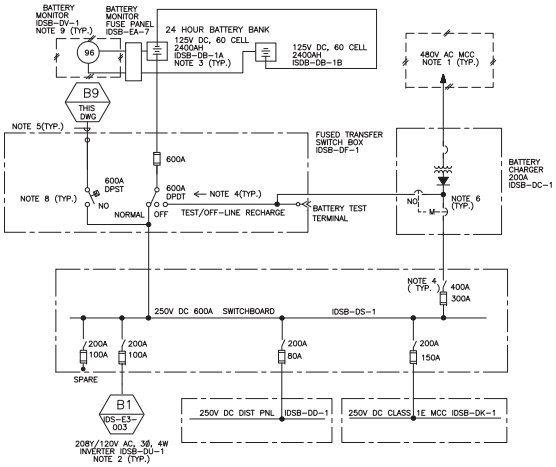

24 HOUR BATTERY BANK (DIVISION B)

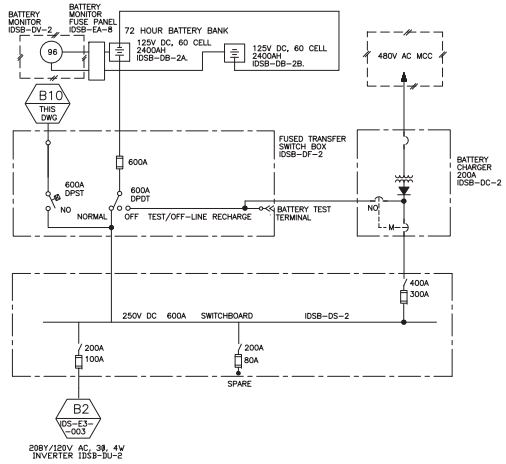

72 HOUR BATTERY BANK (DIVISION B)

NOTES

1. 480V AC INPUT POWER TO BATTERY CHARGERS IS PROVIDED FROM ONSITE STANDBY DIESEL GENERATOR BACKED MCC.
2. SEE DWG. NO. IDS-E3-003 FOR UPS CONFIGURATION.
3. BATTERY AMPERE-HOUR RATING IS BASED ON 8 HOURS DISCHARGE RATE.
4. ALL FUSIBLE DISCONNECT SWITCHES ARE RATED FOR 50 KA SHORT CIRCUIT RATING. THE 600A SWITCH RATING IS CAPABLE OF CARRYING 1200A FOR UP TO 2 HOURS WITH THE EXCEPTION OF THOSE ASSOCIATED WITH THE SPARE DIVISION WHICH ARE 1200A RATING, CAPABLE OF CARRYING 2400A FOR UP TO 2 HOURS.
5. SPARE CLASS 1E BATTERY BANK WITH SPARE CLASS 1E BATTERY CHARGER IS UTILIZED FOR CLASS 1E DC SYSTEM AS A TEMPORARY REPLACEMENT FOR ANY 24 HR OR 72 HR BATTERY BANK ONE AT A TIME.
6. MECHANICALLY INTERLOCKED. ONLY ONE BREAKER CAN BE CLOSED AT A TIME.
7. PLUG-IN LOCKING TYPE DISCONNECT IS PROVIDED TO CONNECT TO THE SPARE BATTERY TERMINATION BOX, IDSS-DF-3.
8. KIRK-KEY INTERLOCK SWITCH IS PROVIDED TO PREVENT TRANSFER OPERATION OF MORE THAN ONE SWITCHBOARD AT A TIME.
9. FOR LEGEND AND ABBREVIATION, SEE DWGS GW-E9-001, -002 AND -003.
10. INCOMING FUSE TO SPARE FUSED TRANSFER SWITCH BOX (600A) IS REPLACED WITH A 1200A FUSE WHEN THE SAME BATTERY IS USED IN SUPPORT OF EDS1, 2, 3 OR 4.

REFERENCE DRAWINGS

TITLE	DWG. NO.
AC POWER SYSTEM – STATION ONE LINE DIAGRAMS	FIG 8.3.1-1
CLASS 1E DC SYSTEM – STATION ONE LINE DIAGRAM DIV. A & C	FIG 8.3.2-1 (SHT 1)
CLASS 1E UPS SYSTEM– STATION ONE LINE DIAGRAM DIV A,B,C & D	FIG 8.3.2-2
CLASS 1E DC SYSTEM ONE LINE METER & RELAY DIAGRAMS	IDS-E3-004 THRU 010

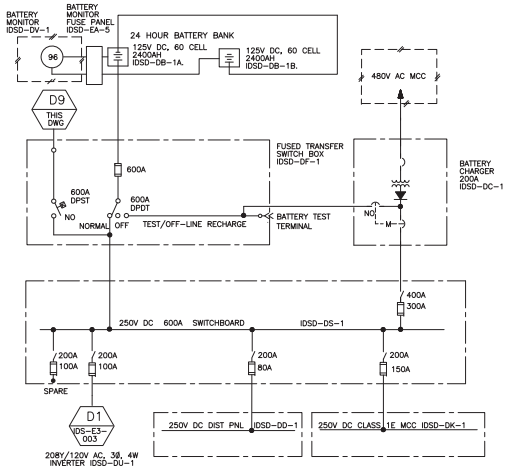

24 HOUR BATTERY BANK (DIVISION D)

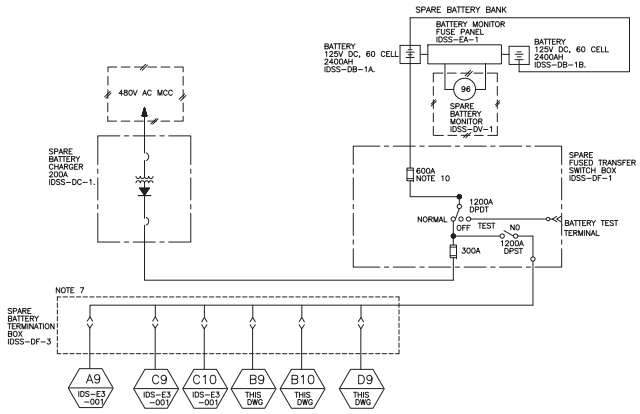

SPARE BATTERY BANK (NOTE 5)

Figure 8.3.2-1 (Sheet 2 of 2)
Class 1E DC System One Line Diagram

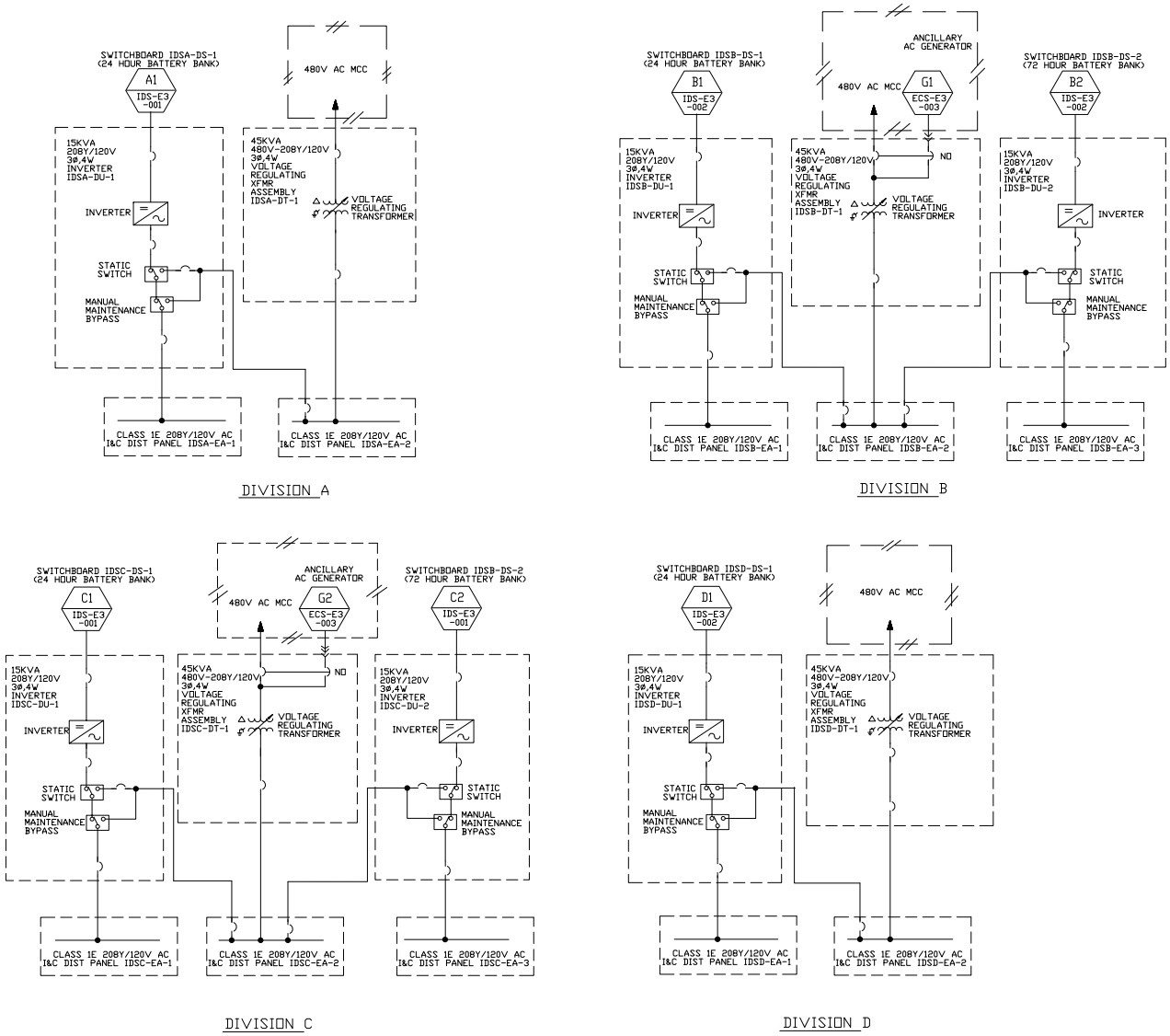

Figure 8.3.2-2
Class 1E 208y/120V UPS One Line Diagram

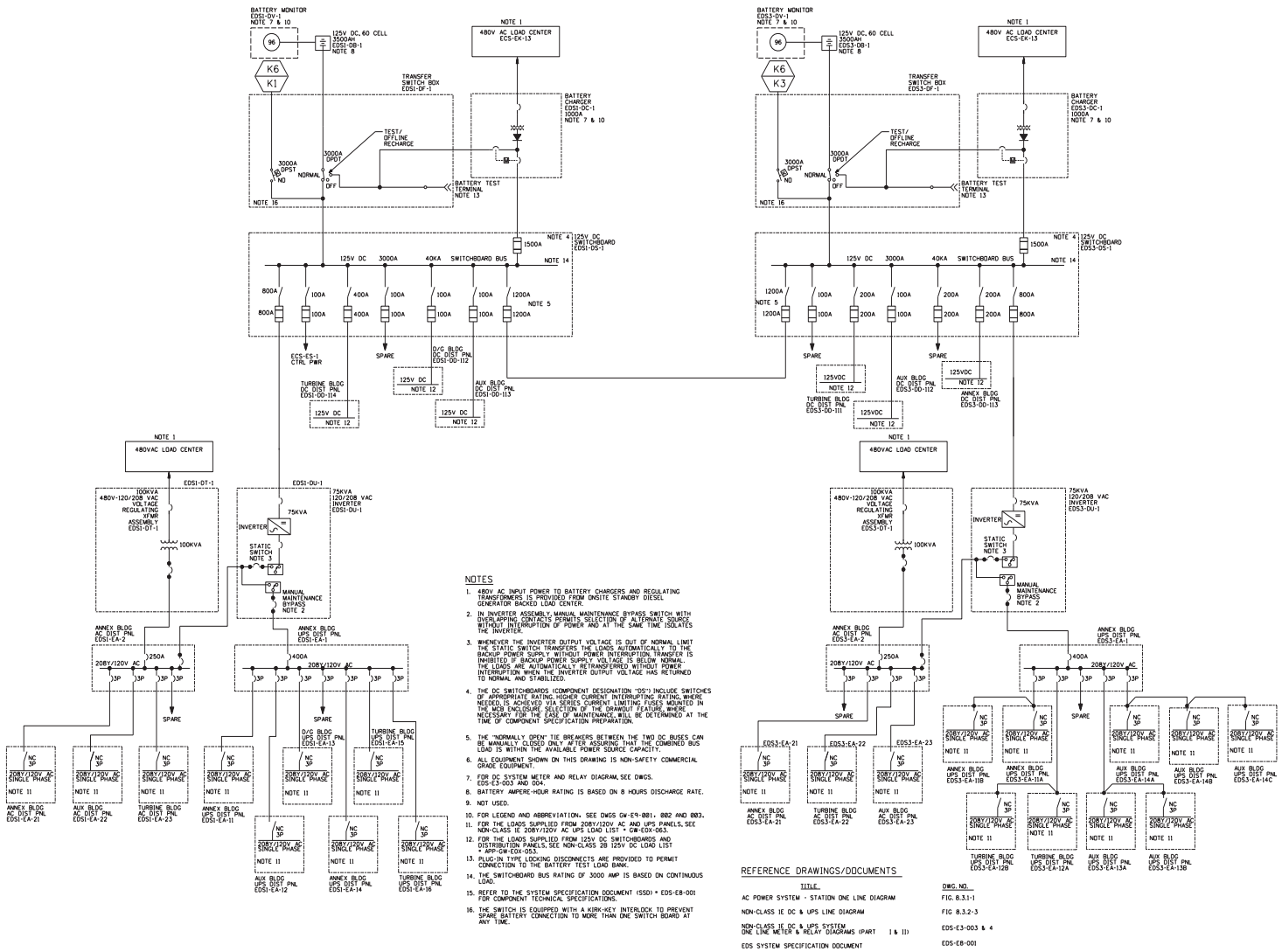

Figure 8.3.2-3 (Sheet 1 of 3)
Non-Class 1E DC & UPS System One Line Diagram

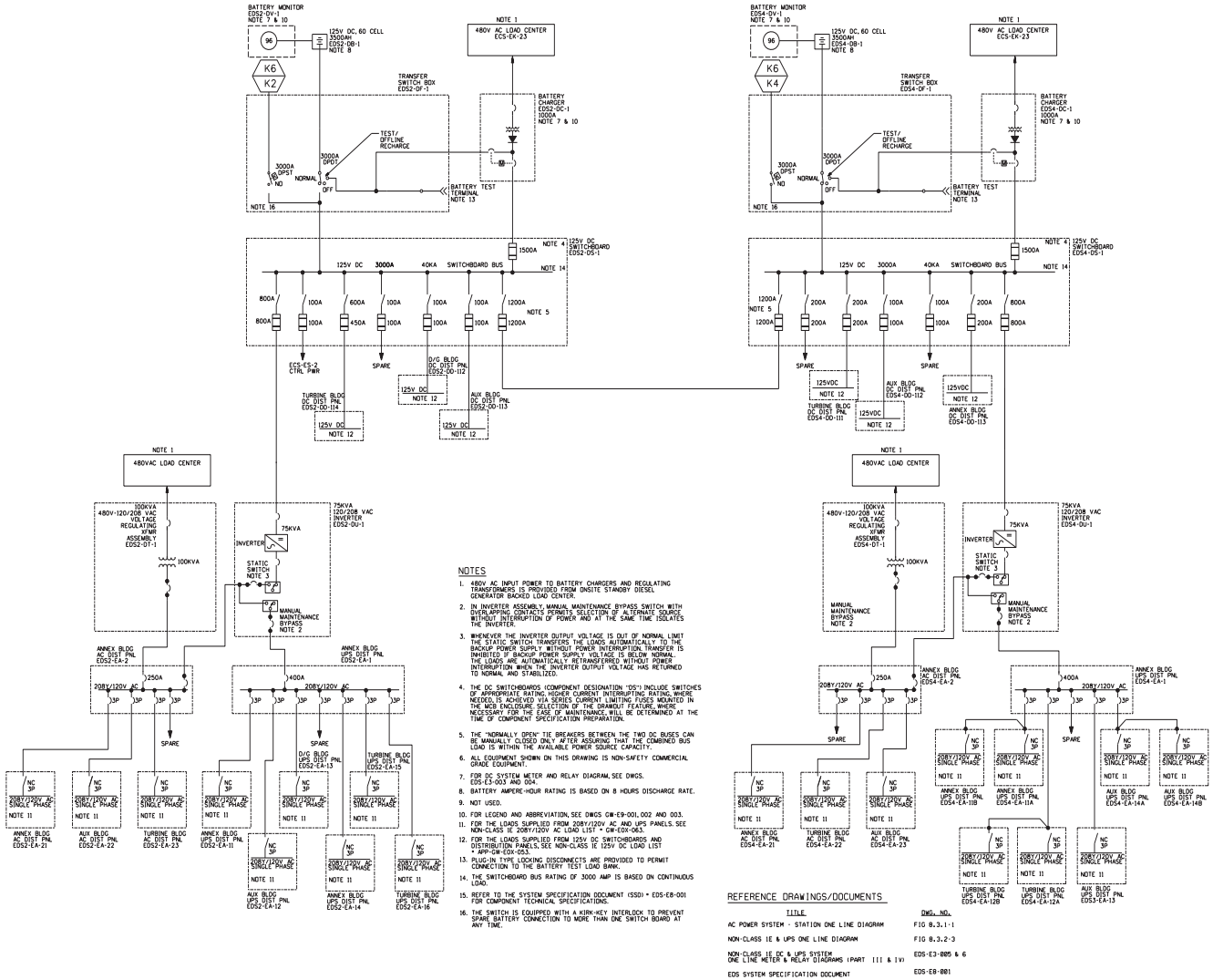

Figure 8.3.2-3 (Sheet 2 of 3)
Non-Class 1E DC & UPS System One Line Diagram

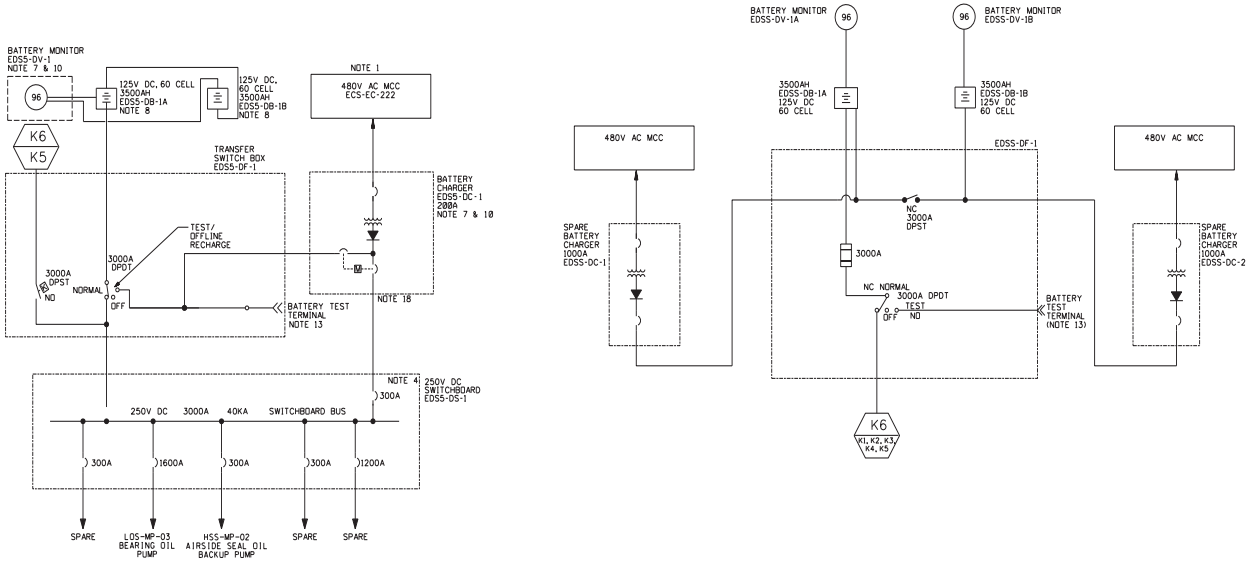

NOTES

1. 480V AC INPUT POWER TO BATTERY CHARGERS IS PROVIDED FROM ONSITE STANDBY DIESEL GENERATOR BACKED MOTOR CONTROL CENTERS.
2. NOT USED
3. NOT USED
4. THE DC SWITCHBOARDS (COMPONENT DESIGNATION "DS") INCLUDE MOLDED CASE CIRCUIT BREAKERS OF APPROPRIATE RATING. HIGHER CURRENT INTERRUPTING RATING, WHERE NEEDED, IS ACHIEVED VIA SERIES CURRENT LIMITING FUSES MOUNTED IN THE MCB ENCLOSURE. SELECTION OF THE DRAWOUT FEATURE, WHERE NECESSARY FOR THE EASE OF MAINTENANCE, WILL BE DETERMINED AT THE TIME OF COMPONENT SPECIFICATION PREPARATION.
5. NOT USED
6. ALL EQUIPMENT SHOWN ON THIS DRAWING IS NNS COMMERCIAL GRADE EQUIPMENT.
7. FOR NON-CLASS 1E DC SYSTEM METER AND RELAY DIAGRAM, SEE DWGS. EDS-E3-003 AND 004.
8. BATTERY AMPERE-HOUR RATING IS BASED ON 8 HOURS DISCHARGE RATE.
9. NOT USED
10. FOR LEGEND AND ABBREVIATION, SEE DWGS GW-E9-001, 002 AND 003.
11. NOT USED
12. NOT USED
13. PLUG-IN TYPE LOCKING DISCONNECTS ARE PROVIDED TO PERMIT CONNECTION TO THE BATTERY TEST LOAD BANK.
14. THE SWITCHBOARD BUS RATING OF 3000 AMP IS BASED ON CONTINUOUS LOAD.
15. REFER TO THE SYSTEM SPECIFICATION DOCUMENT (SSD) * APP-EDS-E8-001 FOR COMPONENT TECHNICAL SPECIFICATIONS.
16. THE SWITCH IS EQUIPPED WITH A KIRK-KEY INTERLOCK TO PREVENT SPARE BATTERY CONNECTION TO MORE THAN ONE SWITCH BOARD AT ANY TIME.

REFERENCE DRAWINGS/DOCUMENTS

TITLE	DWG. NO.
AC POWER SYSTEM - STATION ONE LINE DIAGRAM	FIG. 8.3.1-1
NON-CLASS 1E & UPS ONE LINE DIAGRAM	FIG. 8.3.2-3
NON-CLASS 1E DC & UPS SYSTEM ONE LINE METER & RELAY DIAGRAMS (PART I & II)	EDS-E3-003 & 4
EDS SYSTEM SPECIFICATION DOCUMENT	EDS-E8-001

Figure 8.3.2-3 (Sheet 3 of 3)
Non-Class 1E DC & UPS System One Line Diagram