CATEGORY 1

REGULATORY INFORMATION DISTRIBUTION SYSTEM (RIDS)

ACCESSION NBR:9801270104 DOC.DATE: 98/01/20 NOTARIZED: NO DOCKET #
FACIL:50-387 Susquehanna Steam Electric Station, Unit 1, Pennsylva 05000387
50-388 Susquehanna Steam Electric Station, Unit 2, Pennsylva 05000388
AUTH.NAME AUTHOR AFFILIATION
BYRAM,R.G. Pennsylvania Power & Light Co.
RECIP.NAME RECIPIENT AFFILIATION
Document Control Branch (Document Control Desk)

SUBJECT: Responds to NRC 971219 telcon RAI re util identification of inconsistencies between FSAR,TS & NRC SER for plants.Util's view of licensing basis & action plan to resolve issues, discussed.

DISTRIBUTION CODE: A001D COPIES RECEIVED:LTR 1 ENCL 1 SIZE: 16
TITLE: OR Submittal: General Distribution

NOTES: 05000387

	RECIPIENT ID CODE/NAME	COPIES LTTR	COPIES ENCL	RECIPIENT ID CODE/NAME	COPIES LTTR	COPIES ENCL
	PD1-2 LA	1	1	PD1-2 PD	1	1
	NERSES,V	1	1			
INTERNAL:	ACRS	1	1	FILE CENTER 01	1	1
	NRR/DE/ECGB/A	1	1	NRR/DE/EMCB	1	1
	NRR/DRCH/HICB	1	1	NRR/DSSA/SPLB	1	1
	NRR/DSSA/SRXB	1	1	NUDOCS-ABSTRACT	1	1
	OGC/HDS2	1	0			
EXTERNAL:	NOAC	1	1	NRC PDR	1	1
NOTES:		1	1			

C A T E G O R Y 1 D O C U M E N T

NOTE TO ALL "RIDS" RECIPIENTS:
PLEASE HELP US TO REDUCE WASTE. TO HAVE YOUR NAME OR ORGANIZATION REMOVED FROM DISTRIBUTION LISTS OR REDUCE THE NUMBER OF COPIES RECEIVED BY YOU OR YOUR ORGANIZATION, CONTACT THE DOCUMENT CONTROL DESK (DCD) ON EXTENSION 415-2083

TOTAL NUMBER OF COPIES REQUIRED: LTTR 15 ENCL 14

Robert G. Byram
Senior Vice President
Generation and Chief Nuclear Officer
Tel. 610.774.7502 Fax 610.774.5019
E-mail: rgbyram@papl.com

PP&L, Inc.
Two North Ninth Street
Allentown, PA 18101-1179
Tel. 610.774.5151
http://www.papl.com/

JAN 2 0 1998

U.S. Nuclear Regulatory Commission
Attn.: Document Control Desk
Mail Stop P1 - 137
Washington, D.C. 20555

SUSQUEHANNA STEAM ELECTRIC STATION
FEEDWATER PENETRATION
CONTAINMENT ISOLATION VALVES
PLA-4831 FILE R41-2 **Docket Nos. 50-387 & 50-388**

PP&L identified inconsistencies between the FSAR, Technical Specifications, and the NRC SER for Susquehanna (NUREG-0776) regarding the containment isolation provisions for the Feedwater Penetrations (X-9A/B). Over the past two months, various meetings and telephone calls have been held between PP&L and the NRC staff. In addition, the NRC staff has provided a discussion of their concerns and unresolved items in the latest inspection report for Susquehanna (i.e., IR 97-09). This letter responds to the NRC's request for information in our December 19, 1997 telecon, documents PP&L's view of the licensing basis, and discusses PP&L's action plan to resolve the issues.

In September 1996, PP&L identified a number of inconsistencies within the licensing documentation related to the containment isolation provisions of the feedwater penetration. These inconsistencies were documented in a Condition Report for further evaluation and to identify corrective actions. This issue was identified while reviewing the design and licensing basis of the feedwater penetration as part of an overall assessment of the feedwater penetration.

This issue involves discrepancies between the approved Technical Specifications and the descriptive text of the FSAR. Although some of the text within the FSAR and the containment isolation valve tables in the FSAR are consistent with the Technical Specifications, other text within the FSAR appeared to indicate that Susquehanna relied on additional valves that were not in the Technical Specifications as containment isolation valves. In addition, the NRC SER discussion (NUREG-0776) of the NRC approval of the containment isolation provisions of the feedwater penetration was silent with regard to the approval basis for the feedwater penetration containment isolation valves included in the Technical Specifications.

A001

PP&L promptly performed an operability assessment, in accordance with the guidance in Generic Letter 91-18, to assure that, regardless of the inconsistencies within the licensing documentation, the Susquehanna plant was safe to continue to operate while the evaluations continued. This assessment has been revised to add additional assurance of defense in depth as more information became available to support the safe operation of Susquehanna. Information such as the lack of fuel failure for the accident in question and the operability of the inside containment isolation valve during the accident support the continued safe operation of Susquehanna. These technical evaluations, each by itself providing acceptable accident analysis results in accordance with the guidance in Generic Letter 91-18, support the conclusion that the safety significance of this issue is low. While our analysis considered that the safety significance is low, given the regulatory significance, we are aggressively pursuing resolving the issues by upgrading the penetration.

Following the operability assessment, PP&L identified the need to modify the licensing basis for the containment isolation provisions of the feedwater penetration in order to: 1) meet PP&L's current expectations for containment isolation, 2) clarify the licensing approval basis, and 3) ensure ambiguity is eliminated in the licensing documentation. Several options were considered. One option involved performance of revised accident analyses using more realistic source terms and/or more realistic radiological release models (i.e., NUREG-1460). Preliminary evaluations indicate acceptable results could be obtained. NRC approval for this approach would be required. A second option involved an upgrade to the feedwater piping supports inside the containment. Scoping evaluations indicated that this modification was substantial due to the complications involved in performance of a major modification inside the containment. The third option involved modifications to the two valves outside the containment to improve their leakage performance so that they could be tested in accordance with 10 CFR 50 Appendix J. These two valves would then be added to the Technical Specifications as containment isolation valves. This third option was selected primarily because it was considered to be a significant upgrade of the containment isolation provisions of the feedwater penetration, and it eliminated the ambiguities in the licensing documentation. A major project with a funding estimate of two million dollars was authorized, a project team was formed, and work commenced to upgrade the design. Considerable engineering challenges remain before this option can be implemented. The required analyses, such as the check valve slam analyses, need to be completed and documented in accordance with our QA program.

Based on the safety significance of the issues identified, which considers the defense in depth established in the operability assessment, modifications are scheduled to be completed during the Unit 1 10th RIO (Spring 1998) and the Unit 2 9th RIO (Spring 1999). With respect to Unit 2, our plans are to have the modification documentation completed and parts available to install should there be an extended unplanned outage of sufficient duration prior to the 9th RIO. Due to the complexity of this modification, an outage of three to four weeks would be required to perform all work and required testing. By July 1998, the modification documentation is scheduled to be completed and the parts will be available if an outage were to occur.

PP&L has managed this complicated issue in accordance with our Condition Report Program. We believe we have performed conservative safety assessments and made conservative decisions regarding the chosen solution. Given the safety significance of the issue, PP&L has chosen a reasonable time frame to implement the solutions.

Although the feedwater penetration issue was found by PP&L during a separate review, PP&L's Current Licensing Basis (CLB) review project was initiated in early 1996 to find these type of issues and correct discrepancies. PP&L believes that our increased sensitivity to CLB issues has been demonstrated by the conservative actions that were taken on the feedwater penetration issue. These actions were planned before the NRC increased their review of this issue. Therefore, we believe the guidance provided in SECY 96-154 regarding inspection and enforcement discretion should be applied for the NRC's review of the feedwater penetration issue.

The attachment discusses in more detail the licensing basis associated with the containment isolation provisions for the feedwater penetrations and provides the basis for operation until modifications and testing can be performed.

For further information please contact Mr. A. J. Roscioli at (610) 774-4019.

Sincerely,

R. G. Byram

Attachment

copy: Regional Administrator - Region I
Mr. K. Jenison, NRC Sr. Resident Inspector
Mr. V. Nerses, NRC Project Manager
Mr. K. Kerns, Pa. DEP

ATTACHMENT
Feedwater Containment Isolation Provisions

Feedwater Penetration Description

As shown on the enclosed figure, feed flow to the reactor vessel is supplied by two feedwater lines, which in turn are supplied with feedwater via a common header from the feedwater pumps. Each of the 24 inch feedwater lines has a separate containment penetration, which are designated X-9 A and B. Inside containment, each 24 inch line further splits into three 12 inch lines, each of which connects to a separate feedwater nozzle at the reactor vessel. The split into the 12 inch lines occurs downstream of the 1(2)41F011A/B valves, which are normally open manual (local) motor operated gate valves, provided for maintenance. Proceeding outward, the next valve is the 1(2)41F010A/B, which is a tilting-disk check valve that is welded directly to the containment penetration piping. This valve is followed by the HV-1(2)4107A/B valve which is welded directly to the flued head. The HV-1(2)4107A/B valve is a swing check valve with an actuator that can be used for testing the valve at power to ensure that it is not stuck in the full open position. The actuator is only capable of bumping the valve further into the flow stream and cannot positively close the valve. The next valve encountered in the feedwater lines themselves are the HV-1(2)41F032A/B stop check valves. These valves have a motor operator which is remote-manually operated from the control room. This operator is capable of driving the HV-1(2)41F032A/B valve closed under no feedwater flow conditions.

Between the HV-1(2)4107A/B and HV-1(2)41F032A/B valves RWCU, RCIC, and HPCI connect to the feedwater lines. RWCU has a connection to both the "A" and "B" feedwater lines, while RCIC connects only to the "A" line and HPCI connects only to the "B" line. RWCU flow is returned to the reactor vessel via a single 4 inch line, which splits into two 3 inch lines which connect to the feedwater lines. Each 3 inch connection is provided with a remote manual motor operated gate valve (HV-1(2)4182A/B) followed by a swing check valve (1(2)41F039A/B). HPCI and RCIC are isolated by normally closed motor operated gate valves (HV-1(2)55F006 and HV-1(2)49F013, respectively).

Feedwater Penetration Licensing/Design Basis

FSAR Sections 6.2.4 and 6.2.6 discuss the general licensing basis for containment isolation and testing at Susquehanna. Supplemental information specific to the RWCU connection to the feedwater penetration is provided in Subsection 18.1.29, which responds to requirement II.E.4.2 of NUREG-0737 associated with Containment Isolation Dependability. FSAR Subsection 6.2.4.1 identifies the following design bases germane to the feedwater penetrations:

- "Containment isolation valves provide the necessary isolation of the containment in the event of accidents or other conditions. They limit the release of radioactive materials from the containment in excess of the design limits."

- "The design of isolation valving for lines penetrating the containment follows the requirements of General Design Criteria 54 through 56 as noted in Table 6.2-12."

- "Isolation valves, actuators, and controls are protected against loss of safety function from missiles and accident environments"

Additionally, FSAR Subsection 6.2.4.4 states, "A discussion of testing and inspection, including leak tightness testing, pertaining to isolation valves is provided in Subsection 6.2.6 and in the Technical Specifications. Table 6.2-12 lists all isolation valves." Table 6.2-12 does not list the HV-1(2)4107A/B or the 1(2)41F039A/B valves.

FSAR Section 6.2.6 discusses the testing program for primary containment leak rate testing, including primary containment isolation valve leakage rate testing (Type C tests) in compliance with 10CFR50, Appendix J. Specifically, Subsection 6.2.6.3, Primary Containment Isolation Valve Leakage Rate Tests, states that the "containment isolation valves that are tested in accordance with 10CFR50, Appendix J are listed in Table 6.2-22." The valves listed in FSAR Table 6.2-22 are consistent with those listed in Table 6.2-12 and Technical Specification Table 3.6.3-1. Currently, at Susquehanna only those CIVs identified in the Technical Specification table are leak rate tested in accordance with Appendix J. Since PP&L has implemented Appendix J Option B, this testing is performed in accordance with the requirements of Regulatory Guide 1.163, NEI 94-01, and ANSI/ANS-56.8-1994 (hereafter referred to as ANS 56.8). ANS 56.8 provides the specific technical methods and techniques for performing Types A, B and C tests which are acceptable to the NRC staff. Additionally, ANS 56.8 provides guidance on performing testing of various isolation valve configurations and reporting of leak rate results for the purposes of satisfying Appendix J leak rate limits. With regard to the feedwater penetration, the configuration of interest is one containing multiple valves in series, tested individually. Additionally, ANS 56.8 establishes the fact that leak rate testing to Appendix J limits is performed for conditions associated with the Design Basis Accident (DBA), which is defined in ANS 56.8 as follows:

> "The accident initiated by a single component failure or operator error, as described in the safety analyses of the plant, which results in the maximum primary containment internal peak pressure and in fission product release to the containment atmosphere."

The significance of this statement is that leak rate testing is performed for the DBA LOCA and not for each specific pipe break postulated in the licensing basis. Therefore, the containment isolation configuration is not specifically tested for other less severe pipe breaks. In the case of the feedwater penetration, this means that Appendix J testing is performed for the configuration present for the DBA LOCA, not a feedwater line break.

The potential for core damage due to a feedwater line break inside primary containment is remote. The Power Uprate LOCA analyses of the feedwater line break (FWLB) are documented in NEDC-32071P, "Susquehanna Steam Electric Station Units 1 and 2 SAFER/GESTR-LOCA Loss-of-Coolant Accident Analysis". The results given in Section 5.1.2 of that report demonstrate that the Peak Cladding Temperature (PCT) does not increase during the event. This low PCT is due to the fact that the core remains essentially covered throughout the duration of the event. The conclusion that the PCT remains low throughout the feedwater line break event is independent of fuel type, since it is driven by the fact that the core remains covered due to the ECCS response to the event (which are largely unaffected by the fuel type). Thus, this conclusion applies to the fuel types currently in the Susquehanna Steam Electric Station cores (ATRIUM™-10, SPC 9x9-2, GE12 LUAs, and the SVEA-96+ LUAs). Therefore, no fuel damage is expected as a result of a feedwater line break at the Susquehanna Steam Electric Station Units.

Other information relevant to the design of the feedwater piping penetrating primary containment is contained in FSAR Subsection 3.6.2.1.1 and 3.6.1.2.2. FSAR Subsection 3.6.2.1.1 provides a discussion of the design requirements for the piping between containment isolation valves. This subsection establishes the fact that such piping is designed so as to preclude the postulation of breaks, as well as, maintaining integrity following a break in the piping beyond the containment isolation valves. Subsection 3.6.1.2.2 provides the specific evaluation of the feedwater penetrations with regard to pipe break design. This subsection, in conjunction with FSAR Figure 3.6-2 and feedwater valve design calculations establish the design basis for the feedwater penetration with regard to "no break" criteria and containment isolation following a feedwater line break inside containment.. As shown in FSAR Figure 3.6-2, for this penetration the no break zone extends from the weld between the 1(2)41F010A,B valve and the penetration piping which extends out through the outer-most CIV in feedwater, RWCU, HPCI, and RCIC lines which comprise the feedwater penetration. The piping up to the outer-most containment isolation valves meets the "no break" criteria of FSAR Subsection 3.6.2.1.1. Although not discussed in the FSAR text, the 1(2)41F010A/B valve was shown in FSAR Figure 3.6-2 to be outside the no break zone because it was believed that it could not withstand the pipe whip stresses during a feedwater line break. In addition, a specific meeting was held between NRC, PP&L, and Bechtel to review the main steam and feedwater break locations which included documentation showing the break between the 1(2)41F010A/B valves and the containment wall (Reference 4). Based on the above, it was concluded that the licensing basis for Susquehanna considers that the 1(2)41F010A/B valve could not be relied upon for certain feedwater line breaks inside containment. This discussion addresses issue URI 50-387,388/97-09-05 which is identified in NRC Inspection Report 97-09 (see page 9 of this attachment). Recently, the ability of the 1(2)41F010A/B valve to withstand the pipe whip forces during a feedwater line break was reevaluated and the results are discussed in the operability evaluation section below.

FSAR Subsection 6.2.4.3.2.1 provides the specific evaluation of the feedwater penetration with regard to the requirements of GDC 55. This subsection states "Each feedwater line forming a part of the reactor coolant pressure boundary is provided with a nonslam type check valve inside containment. A motor operated check valve is installed upstream of the outside isolation valve to provide long term isolation capability." This description corresponds to the 1(2)41F010A/B, HV-1(2)4107A/B, and HV-1(2)41F032A/B valves. While not specifically stated in this subsection, the use of three check valves in each feedwater line is consistent with the evaluation of the feedwater line in Subsection 3.6.1.2.2. The two check valves outside containment are needed due to the lack of protection from a feedwater line break for the 1(2)41F010A/B valves, and the desire to maintain feedwater as a possible source of make-up for the reactor vessel. Although not all of these valves are required to be tested in accordance with Appendix J per Technical Specifications, for the feedwater lines at least two automatic valves and one positive closure valve are provided for all breaks inside primary containment.

The FSAR Subsection 6.2.4.3.2.1 also identifies that the HPCI, RCIC, and RWCU return lines connect to the feedwater lines outside the feedwater penetration, but contain remote manually operated stop valves which provide a "second means of containment isolation." Since the 1(2)41F010A/B valve is not protected for a feedwater line break, the HV-1(2)4107A/B and 1(2)41F039A/B valves would be provided for a feedwater line break. However, these valves are not required to be tested in accordance with Appendix J per Technical Specifications. FSAR Subsection 18.1.29.3 identifies the isolation function for the RWCU return lines as being provided by three series check valves (1(2)41F010A/B, HV-1(2)4107A/B and 1(2)41F039A/B valves), which is true for all break locations except a feedwater line break. It further identifies that additional manual isolation valves are provided in the RWCU Return lines (Note: the specific reference is made to the original CIVs rather than the HV-1(2)4182A/B valve, which are the current CIVs approved in Reference 1).

While the preceding discussions indicate that containment isolation function for the feedwater penetrations relies upon the HV-1(2)4107A/B and 1(2)41F039A/B valves for the feedwater line break, it does not establish leakage testing requirements for these valves via Technical Specifications nor the FSAR Tables which list CIVs (i.e., 6.2-12 and 6.2-22). These tables, which establish the CIVs to be tested in accordance with Appendix J, do not list these valves as containment isolation valves. This is also consistent with the P&IDs which do not designate these valves as containment boundary valves. Other communication (References 2 and 3) clearly indicate that the HV-1(2)4107A/B valves are not considered containment isolation valves. Furthermore, based upon these FSAR Tables, Technical Specifications, and the P&IDs, the HPCI, RCIC, and RWCU Return lines connect to the feedwater lines within the containment penetration boundary. Only the valves relied upon for the DBA LOCA are tested in accordance with Appendix J which is consistent with ANS 56.8 guidance. Therefore, PP&L believes that the licensing basis for the feedwater containment isolation provisions for Susquehanna, as discussed above, did not include the HV-1(2)4107A/B and 1(2)41F039A/B valves as containment isolation valves. However, PP&L acknowledges that these valves mitigate the effects of the feedwater line break and, therefore, must remain in the Susquehanna plant. This discussion addresses issues

URI 50-387,388/97-09-04 and URI 50-387,388/97-09-03 which are identified in NRC Inspection Report 97-09 (see page 9 of this attachment).

Guidance is provided in ANS 56.8-1994 for testing penetrations with multiple barriers in series and tested individually. PP&L's Leakage Rate Test Program (and Appendix J) requires that the minimum pathway (or best valve) leakage for "as-found" Type C testing (LLRT) and the maximum pathway (or worst valve) leakage for "as-left" Type C testing be less than 0.6 L_a.[1] Since each line in question should have three or four CIVs in series for isolation, Figure 6-1 of ANS 56.8 shows that the minimum pathway leakage equates to that associated with the "best valve", while the maximum pathway leakage is associated with the second best performing valve. Since the currently tested CIVs in the lines forming the feedwater penetration already fulfill these requirements, the lack of leakage testing for the HV-1(2)4107A/B and 1(2)41F039A/B valves has no impact on the as-found or as-left Appendix J leakage reported for the penetration.

Although design calculations show that the 1(2)41F010A/B valve is not protected for a feedwater line break, PP&L is concerned that the documentation provided to the NRC during initial licensing of Susquehanna does not explicitly identify this issue. In addition, although the Technical Specifications specify the containment isolation valves that are required to be Appendix J leakage tested, certain wording in the FSAR could be interpreted that the HV-1(2)4107A/B and 1(2)41F039A/B valves are considered CIVs. Therefore, PP&L has performed an operability assessment of the feedwater penetration for postulated pipe break scenarios, and plans to upgrade the penetration by performing modifications to the HV-1(2)4107A/B and 1(2)41F039A/B valves so that they can be designated and tested as containment isolation valves to eliminate ambiguities created by previous documentation and meet PP&L's current expectations for containment isolation.

Operability/Safety Assessment

A DBA LOCA will bound all other breaks except a feedwater line break inside primary containment, since the 1(2)41F010A/B are protected from the effects of all such breaks using design basis assumptions.

For the DBA LOCA case, the feedwater 1(2)41F010A/B valves will be fully functional and will provide containment isolation in accordance with all design basis requirements. Additional isolation to the 1(2)41F010A/B valves would be provided by the HV-1(2)4107A/B valves and the HV-1(2)41F032A/B valves for the feedwater line. Since both the 1(2)41F010A/B and HV-1(2)41F032A/B valves provide automatic isolation and are tested to be within Appendix J limits, a single failure of one of the valves to close will not result in primary containment leakage in excess of that assumed in the DBA LOCA Dose Analysis. Therefore, even though the HV-

[1] L_a is the maximum allowable primary containment leakage rate assumed in the DBA LOCA Dose Analysis, and equates to 1% of the primary containment air weight per day, at a pressure of P_a; where P_a is defined as the peak calculated containment internal pressure for the design basis loss of coolant accident (45 psig).

1(2)4107A/B valves are not leak rate tested, the licensing basis evaluation for a DBA LOCA with regard to the feedwater lines is not impacted.

For the RWCU lines during a DBA LOCA, isolation in addition to the 1(2)41F010A/B valves is provided by the HV-1(2)4182 valves (when closed) along with the 1(2)41F039A/B and HV-1(2)4107A/B valves. In this situation, two leak rate tested valves are provided (i.e., 1(2)41F010A/B and HV-1(2)4182) , however, one of those valves is closed via remote manual operation. The ability to provide additional protection via compensatory actions to close the HV-1(2)4182A/B valves was considered and discussed below.

If it is assumed that core damage occurs, it is shown in NUREG-1465 "Accident Source Terms for Light-Water Nuclear Power Plants" issued in February 1995 that release of fission products ramps up to approximately R.G. 1.3 levels two hours after the event occurs. It is therefore concluded based on the existence of the numerous leakage barriers, the tortuous path, and the NUREG-1465 delay in release of fission products (which assumes extensive core damage that is not expected to occur), that remote manual closure of the HV-1(2)4182A/B approximately one hour after event occurrence is a reasonable time frame in which establishment of a leak rate tested containment barrier for the RWCU line is necessary. Procedural enhancements have been made to provide further assurance that the action to close the HV-1(2)4182A/B valves will be accomplished. Additionally, during a Feedwater (FW) Line Break event, the Technical Support Center (TSC) would be activated. With the TSC activated, Emergency Plan - Position Specific (EP-PS) procedures would be in affect. Technical Support Coordinator procedure, EP-PS-102, provides a task to restore the Feedwater piping water seal, when containment is required and Feedwater or Condensate are not in service. Additionally, EP-PS-102 provides methods to restore the water seal (e.g. place Condensate in service, use ESW or Fire Protection to refill the line). The activation of the TSC would make engineering support personnel available. These individuals would then develop methods and options to restore the FW piping water seal. Based on the preceding, it is reasonable to conclude that a water seal could be established within 24 hours.

For a feedwater line break at certain weld locations between the 1(2)41F010A/B valves and the Reactor Pressure Vessel (RPV), the design calculation of record assumed that the 1(2)41F010A/B valve in one of the feedwater lines would be unable to perform its safety function of containment isolation. It was assumed that double-ended guillotine pipe breaks at one of these specific locations, would result in a pipe whip which would cause high stresses in the 1(2)41F010A/B valve body and the piping between the valve and the flued head. It was assumed that the pipe whip restraint design was such that stresses could result in distortion of the valve body, such that its operability (i.e., provide a leak tight barrier in accordance with Appendix J limits) may not be assured. In this situation, isolation for the feedwater line would be provided by the HV-1(2)41F032A/B valve, with additional isolation provided by the HV-1(2)4107A/B valve. Isolation of the RWCU line relies on remote manual closure of the HV-1(2)4182A/B valves.

While the lack of qualification of the 1(2)41F010A/B valve and associated piping could result in a lack of automatic isolation in the RWCU line, the potential for core damage due to a feedwater

line break inside primary containment is remote. The Power Uprate LOCA analyses of the feedwater line break (FWLB) are documented in NEDC-32071P, "Susquehanna Steam Electric Station Units 1 and 2 SAFER/GESTR-LOCA Loss-of-Coolant Accident Analysis". The results given in Section 5.1.2 of that report demonstrate that the Peak Cladding Temperature (PCT) does not increase during the event. This low PCT is due to the fact that the core remains essentially covered throughout the duration of the event. The conclusion that the PCT remains low throughout the feedwater line break event is independent of fuel type, since it is driven by the fact that the core remains covered due to the ECCS response to the event (which are largely unaffected by the fuel type). Thus, this conclusion applies to the fuel types currently in the Susquehanna Steam Electric Station cores (ATRIUM™-10, SPC 9x9-2, GE12 LUAs, and the SVEA-96+ LUAs). Therefore, no fuel damage is expected as a result of a feedwater line break at the Susquehanna Steam Electric Station Units.

While operability of the feedwater penetration for a feedwater line break inside containment would be demonstrated by the preceding discussion, an evaluation of the ability of the 1(2)41F010A/B valves to remain functional was performed. If these valves, including the piping between the valves and the flued head, could be shown to be operable following a feedwater line break inside containment, then there would be no difference between this case and the DBA LOCA case in terms of the containment isolation provisions for the feedwater penetration.

The feedwater piping inside containment was reviewed to determine which breaks between the containment and the reactor vessel were mandatory breaks (i.e., stress levels exceeded those required to meet "no break" criteria). Based on this review, it was determined that the first mandatory break inside containment is at the upstream side of the 1(2)41F011 valve on all loops (both units). At this location, both circumferential and longitudinal breaks were postulated. A break at this location would drive the piping between the 1(2)41F010A/B and 1(2)41F011A/B valves into whip restraints PR-257 on A loop and PR-240 on B loop, respectively (see FSAR Figure 3.6-2). PR-257 on Unit 1 "A loop" has a solid metal (hard) shim installed horizontally and on the top, with a shim containing energy absorbing (EAC) material installed on the bottom. All other restraints have the shims containing EAC material in all three locations. The design drawings show the maximum gap between the piping and the shim as 1-3/8" for the hard shim, while the maximum gap for the EAC material is 3-1/2", assuming full crushing of the material.

Based on these configurations, an elastic piping analysis of the piping from the flued head to the whip restraint was performed to determine worst case end loadings for evaluation of the stresses on the 1(2)41F010A/B valves. The valve evaluation (performed jointly by PP&L and the valve vendor) determined that the stresses imposed on the valve by the pipe break would be within the design stress allowables (assuming 400°F metal temperatures and expected pressures) for the 1(2)41F010A/B valves. This result is consistent with the substantial construction of the valve, which has a minimum wall thickness of 2.3 inches. Consequently, the valve would not experience any distortion of the valve body, and there would be no impact upon the ability of the valve internals to perform their safety function as a result of the loads postulated on the valve following a feedwater line break inside containment.

A finite element analysis (ANSYS) of the piping between the 1(2)41F010A/B valve and the flued head was performed, since the elastic piping analysis indicated high stresses in this area. This analysis was performed by a contractor for PP&L. The ANSYS evaluation determined the maximum plastic stress to be 30,000 psi, which was then compared to limits in ASME Appendix F for operability. Per ASME Section F-1341.2, plastic analysis primary membrane plus bending stress must be limited to .9 S_u. For SA-333 Gr. 6 material .9 S_u is 54,000 psi. Therefore, the piping between the flued head and the 1(2)41F010 will maintain pressure boundary integrity and is operable.

Additionally, the potential consequences of accelerations due to pipe whip loads on the 1(2)41F010A/B valve internals was investigated. It was determined that the maximum allowable acceleration for the valves is 49 g's. A review of the Unit 1 outside containment feedwater piping break analysis was performed to draw conclusions regarding the postulated accelerations which may be experienced inside containment. The postulated accelerations on the HV-1(2)41F032A/B valves were 34 g's and 50 g's from this analysis, respectively. The break outside is in a 30" header, which has approximately 50% greater area than the 24" line inside containment, which proportionally increases the forcing function. Additionally, the postulated accelerations were calculated on the extended operator of the HV-1(2)41F032A/B valves, resulting in values conservative relative to those experienced on the valve body. Furthermore, the HV-1(2)41F032A/B valves are cantilevered considerably further out from the anchor point than the 1(2)41F010A/B valves are inside containment, thereby adding additional conservatism to the postulated accelerations which may be experienced by the 1(2)41F010A/B valves. Based on these facts, it is reasonable to assume that the 1(2)41F010A/B valve accelerations will be less than 49 g allowable acceleration specified by the valve vendor.

The foregoing analysis establishes that the 1(2)41F010A/B valves are qualifiable and that the piping within the "no break" zone remains operable following a feedwater line break inside containment. Therefore, the 1(2)41F010A/B valves will be fully capable of performing their safety function for this condition, and operability of the feedwater penetration can be established on the same basis as a DBA LOCA. In accordance with the guidance provided in Generic Letter 91-18, Revision 1, operability of the feedwater penetration is established.

Safety Significance

Although design calculations show that the 1(2)41F010A/B valves are not protected for a feedwater line break, PP&L is concerned that the documentation to the NRC during initial licensing of Susquehanna does not sufficiently identify this issue. However, the valves and piping are expected to maintain pressure boundary integrity. In addition, as discussed in the operability assessment above, several barriers (i.e., defense in depth) are provided for the feedwater line break scenario to assure offsite dose would be within acceptance limits. PP&L believes the approved licensing basis for the design and testing of the feedwater penetration is met and does not consider this condition to be reportable. Since the Susquehanna plant is being operated in accordance within the provisions of the operating license and Technical Specifications, NRC

approval for continued operation of the Susquehanna units is not required, per Generic Letter 91-18, Revision 1.

NRC Inspection Report 97-009 Issues

As previously stated, PP&L believes that Susquehanna is being operated within the NRC approved design and testing provisions for the containment isolation valves associated with the feedwater penetration. PP&L has a major project which commenced in early 1996 to review the current licensing basis (i.e., FSAR) for Susquehanna, identify issues, and correct discrepancies. On the feedwater penetration issue, PP&L has self-identified a need to clarify the licensing basis and ensure ambiguity is eliminated. To meet PP&L's current expectations for containment isolation, modifications are planned to upgrade the leakage performance of the HV-1(2)4107A/B and the 1(2)41F039A/B valves. This issue was identified in September 1996. Due to the complexity of the issue, a major project team was assembled and the corrective action was developed by mid-1997. The modifications require an extended outage to install. Therefore, in accordance with our Condition Report program and commensurate with the regulatory significance of this issue, PP&L has accelerated the completion of the design and engineering of the modification in order to effect installation in the next refueling outage on each unit.

NRC Inspection Report 97-09 discusses the NRC staff's review of this issue. The report questions the acceptability of the Susquehanna design and testing programs considering the requirements of GDC 55 and 10 CFR 50 Appendix J. The report also questions the timeliness of the planned modifications. Specifically, the NRC has determined that there are three unresolved items:

URI 50-387,388/97-09-03

The FW 7A/B containment isolation valves are credited in the SSES licensing and design basis as part of the alternate containment isolation valve configuration approved as an exception to 10 CFR 50 Appendix A GDC 55 requirements. Containment isolation valves are required to be leakage rate tested by TS 6.8.5, 10 CFR 50.54(o), and 10 CFR 50, Appendix J, Option B. The FW 7A and 7B containment isolation valves have not been leakage rate tested in accordance with PP&L's Appendix J test program.

URI 50-387,388/97-09-04

The isolation valves for RWCU branch lines are part of the FW penetration isolation arrangement but, do not meet the containment isolation requirements of GDC 55. FSAR Section 6.2 lists the lines penetrating the containment that do not meet either the explicit requirements of GDC 55, or the alternative Standard Review Plan acceptance bases, but were accepted on some other defined bases. The RWCU branch line isolation arrangement is not discussed in the FSAR and was not reviewed in the SSES SER. Although the RWCU isolation valves 82A/B can provide long term positive closure of the line, similar to the FW 32A/B, this deviation from GDC 55 does not appear to have been previously reviewed.

URI 50-387,388/97-09-05

The consequential failure of the FW 10A or 10B check valve during a FW line break event was not discussed in FSAR Section 3.6.2.1.1, which describes the FW system's response to a line break inside containment. In addition, this consequential failure was not acknowledged in the SSES SER. The inspector considered this a previously unanalyzed condition which is part of the design basis. This issue is of concern since its resolution may require physical modifications in the plant or licensing actions to review a new configuration as an alternative to GDC 55 requirements.

The previous discussion provides PP&L's view of the approved licensing basis for Susquehanna related to each of the unresolved items identified by the NRC. In general, the NRC approval was based on extensive NRC review at the time of Susquehanna licensing. An independent review of the feedwater penetration piping design was performed for the NRC by Teledyne and a specific meeting was held between NRC, PP&L, and Bechtel to review the main steam and feedwater break locations which included documentation showing the break between the 1(2)41F010A/B valves and the containment wall (Reference 4). At the time of Susquehanna licensing, the design and testing provisions of the feedwater penetration and associated branch lines were considered acceptable. Although the documentation is not completely clear in some of the references, there is a reasonable basis to consider that the HV-1(2)4107A/B and the 1(2)41F039A/B valves were not intended to be containment isolation valves and that the 1(2)41F010A/B valve was not qualified for a feedwater line break. This basis is derived from the fact that the HV-1(2)4107A/B and the 1(2)41F039A/B valves are not in Technical Specification Table 3.6.3-1 or FSAR Tables 6.2-12 and 6.2-22 and that the FSAR Figure 3.6-2 and Reference 4 indicated that the 1(2)41F010A/B valve could not be relied upon for certain feedwater line breaks inside containment. Therefore, the modifications to the Susquehanna plant and the changes planned to the documentation are being performed to upgrade the design and licensing basis for containment isolation of the feedwater penetration and should be performed in accordance with the PP&L planned implementation schedule.

Remaining Actions Planned

To eliminate ambiguities created by previous documentation and meet PP&L's current expectations for containment isolation, PP&L's action plan includes modifications to improve the leakage performance of the HV-1(2)4107A/B and the 1(2)41F039A/B valves. The implementation of these modifications requires an outage of significant duration, thereby necessitating the need for completion during a refueling outage. Based upon the operability assessment and the time required to evaluate modification options, implementation of the modifications during the Unit 1-10RIO (Spring 1998) and Unit 2-9RIO (Spring 1999) is planned. A summary of the actions to be taken is provided below:

1. The HV-1(2)4107A/B valves will be modified during the Unit 1-10RIO and Unit 2-9RIO to improve their leakage performance. The modifications include the installation of dual seats and the removal of the test actuator and position indication. The actuator and position indication are not required, since verification of valve disk operation and position can be achieved through normal operation and leak rate testing. Additionally, the removal of the actuator and indication will eliminate sources of leakage through the valve body, improve the ability of the disk to swing freely, and improve the maintainability of the valve. Additionally, the valve will be re-numbered as the 1(2)41818A/B valve as a result of removal of the actuator.

2. The existing 1(2)41F039A/B valves will be replaced with new valves during the Unit 1-10RIO and Unit 2-9RIO to improve their leakage performance, and test connections will be added to the configuration. Replacement was necessitated by the restricted location of the valve and the desire to improve the valve design for maintainability.

3. The 141818A/B (formerly the HV-14107A/B) and 141F039A/B valves will be added to the containment isolation valve table in the Unit 1 Improved Technical Specification (ITS) bases, in lieu of revising the current Technical Specifications as part of the modification. The Unit 2 valves will be added to the ITS bases as part of the Unit 2 modifications. These changes will be made using the 10CFR50.59 process, if NRC documentation related to this issue subsequent to transmittal of this letter find this approach acceptable.

4. The appropriate FSAR sections will be updated following implementation of the modifications to clearly and consistently reflect the containment isolation design and testing bases for the feedwater penetrations.

Actions identified in 3 and 4 above may result in an interim period where the FSAR identifies the subject valves as CIVs, but the valves will not be listed in Technical Specifications. PP&L will administratively control leakage to within the Appendix J as-left leakage limits for this time period.

Note that engineering analysis continues for these modifications and any issue which precludes completion of these modifications as planned will be brought to the attention of the NRC.

References

1. Letter from W. R. Butler (NRC) to H. W. Keiser (PPL), "Revise Technical Specifications to Support Modifications Which Improve the Containment Isolation Function and Testability of the Feedwater System (TAC NO. 64391)," August 17, 1987.

2. PLA-1563, "Susquehanna Steam Electric Station Feedwater Check Valve Analysis," March 11, 1983.

3. PLA-2192, "Susquehanna Steam Electric Station Proposed Amendment 39 to License NPF-14 and Proposed Amendment 4 to License NPF-22," May 4, 1984.

4. PLA-2505, "Susquehanna Steam Electric Station Pipe Break Locations Allegation," July 10, 1985.

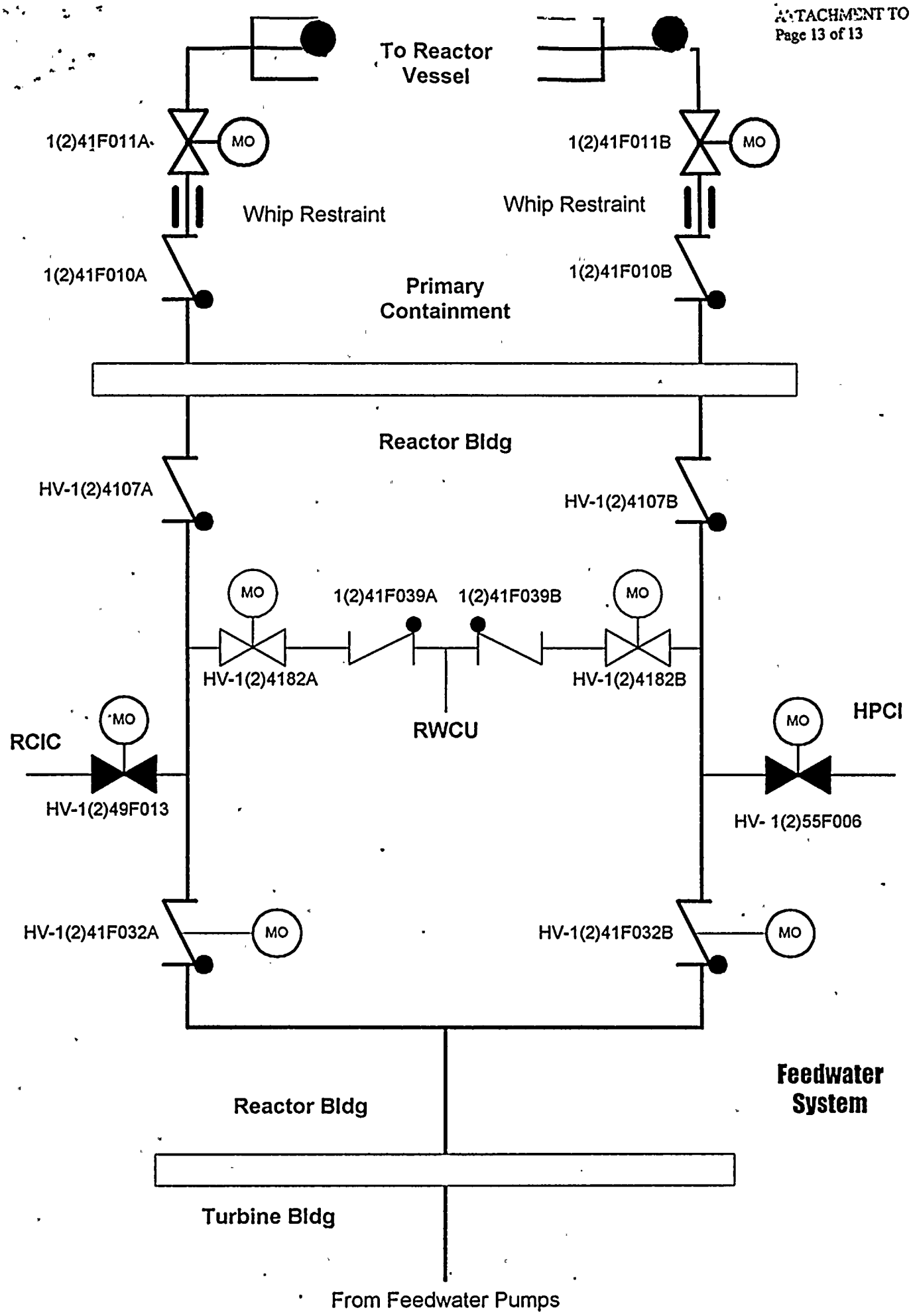
To Reactor Vessel
1(2)41F011A
MO
1(2)41F011B
MO
Whip Restraint
Whip Restraint
1(2)41F010A
1(2)41F010B
Primary Containment
Reactor Bldg
HV-1(2)4107A
HV-1(2)4107B
MO
1(2)41F039A
1(2)41F039B
MO
HV-1(2)4182A
HV-1(2)4182B
RWCU
MO
RCIC
HV-1(2)49F013
MO
HPCI
HV- 1(2)55F006
HV-1(2)41F032A
MO
HV-1(2)41F032B
MO
Feedwater System
Reactor Bldg
Turbine Bldg
From Feedwater Pumps