PP&L

NUCLEAR ENGINEERING

CALCULATION / STUDY COVER SHEET and NUCLEAR RECORDS TRANSMITTAL SHEET

File # R2-1

1. Page 1 of 397 Total

*2. TYPE: STUDY ➢3. NUMBER: EC-QDET-1002 ➢4. REVISION: 1

5. TRANSMITTAL#: _____ *➢6. UNIT: 1 *➢7. QUALITY CLASS: Q *➢8. DISCIPLINE: E

➢9. DESCRIPTION: SINGLE FAILURE ANALYSIS FOR GE SUPPLIED INSTRUMENTS CONNECTED TO CLASS 1E CIRCUITS

SUPERSEDED BY: EC-

10. Alternate Number: _____ 11. Cycle: _____

12: Computer Code or Model used: _____ Fiche ☐ Disks ☐ Am't _____

13. Application: SINGLE FAILURE ANALYSIS

*➢14 *Affected Systems:* _____

** If N/A then line 15 is mandatory.

*➢15. NON-SYSTEM DESIGNATOR: QDET

16. Affected Documents: EC-QDET-1001, SEA-EE-180

17. References: EC-QDET-1001, IEEE 384-1974, IEEE 279-1971, IEEE 379-1977, IEEE 352-1975, NEDO-10139, NE56719, DBD005, SEA-EE-183, SEA-EE-184, SEA-JNPE-198, E-1012

18. Equipment / Component #: _____

19. DBD Number: DBD005

➢20. PREPARED BY	➢21. REVIEWED BY
Print Name JOHN P. AKUS	Print Name JOHN J. WINDERS JR.
Signature John P. Akus 11/15/96	Signature John J. Winders 11/15/96
➢22. APPROVED BY / DATE	23. ACCEPTED BY PP&L / DATE
Print Name JOHN A. BARTOS II	Print Name
Signature John A. Bartos II 11/19/96	Signature

TO BE COMPLETED BY NUCLEAR RECORDS

NR-DCS SIGNATURE/DATE

ADD A NEW COVER PAGE FOR EACH REVISION

* Verified Fields
➢ REQUIRED FIELDS

FORM NEPM-QA-0221-1, Revision 1

9612110295 961127
PDR ADOCK 05000387
P PDR

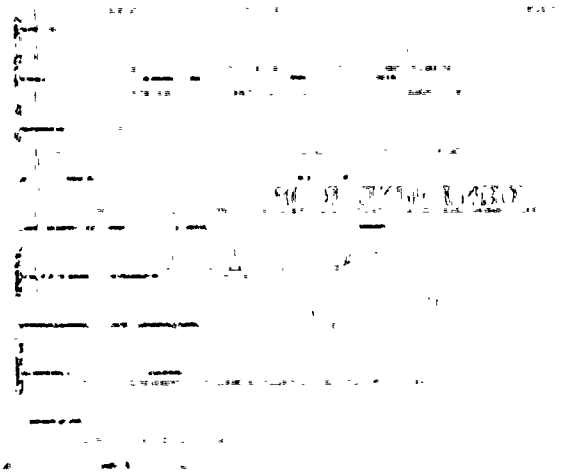

PP&L

ENGINEERING CALCULATION STUDY REVISION DESCRIPTION SHEET

REVISION NO: 1	CALCULATION NUMBER: EC-QDET-1002

This form shall be used to record the purpose or reason for the revision, indicate the revised pages and / or affected sections and give a short description of the revision.
Check **(x)** the appropriate function to *add*, *replace* or *remove* the affected pages.

Revised Pages	Affected Sections	Add	Rpl	Rmv	Description / Purpose of Revision
1	study		X		Cover Sheet - Replace
1a	study	X			Revision Decription Sheet - ADD
2- 393	study		X		Replace Sheets
394-397	study	X			ADD NEW Sheets

REVISION TYPE: ***(check one)***	☐ *SUPERSEDED BY CALCULATION NUMBER* EC- ☒ *FULL REVISION* ☐ *PAGE FOR PAGE*

TABLE OF CONTENTS

1.0 Purpose 4

2.0 Scope 4

3.0 Conclusions 4

4.0 Inputs 4

5.0 Assumptions 5

6.0 Method 6

7.0 References 7

8.0 Evaluation 8

Table 1 10

Appendix A 27

Single Failure Analysis For Category 1 GE Supplied Non Class 1E Instruments Connected To Q Classified Instruments

Appendix B 49

Single Failure Analysis For Category 2 GE Supplied Non Class 1E Instruments Connected To Q Classified Instruments

Appendix C 83

Single Failure Analysis For Category 3 GE Supplied Non Class 1E Instruments Connected To Q Classified Instruments

Appendix D 103

Single Failure Analysis For Category 4 GE Supplied Non Class 1E Instruments Connected to Q Classified Instruments

TABLE OF CONTENTS

Appendix E 116

Single Failure Analysis For Category 5 GE Supplied Non Class 1E instruments connected to q classification instruments

Appendix F 138

Single Failure Analysis For Category 6 GE Supplied Non Class 1E Instruments Connected To Q Classified Instruments

Appendix G 146

Single Failure Analysis For Category 7 GE Supplied Non Class 1E Instruments Connected To Q Classified Instruments

Appendix H 167

Single Failure Analysis For Category 8 GE Supplied Non Class 1E Instruments Connected To Q Classified Instruments

Appendix I 188

Single Failure Analysis For Category 9 GE Supplied Non Class 1E Instruments Connected To Q Classified Instruments

Appendix J 195

Definitions and Abbreviations | R1

Appendix K 203

Evaluation of Q Loads In Cables In Contact With GE Non Class 1E Instruments

Appendix L 206

Q Loads In Cables In Contact With GE Non Class 1E Instruments

1.0 PURPOSE

The purpose of this study is to perform a Single Failure Analysis for the affiliated instrument circuits supplied by GE for Susquehanna SES Unit 1. At Susquehanna SES, affiliated circuits are used instead of IEEE 384 Associated circuits. The definition of an Affiliated circuit as define in FSAR Section 8.1.6 is:

Non Class 1E circuits which satisfy at least one of the following:

a) Supply Power to Non Class 1E loads from Class 1E power supplies

b) Routed in common raceway with Class 1E circuits

c) Share the same enclosure with Class 1E circuits without a 6 inch minimum separation or a physical barrier

R1

A straightforward interpretation definition of an affiliated circuit is a Non Class 1E circuit that is not physically separated or is not electrically isolated from Class 1E circuits by acceptable barriers or isolation devices.

2.0 SCOPE

The Unit 1 affiliated instrument circuits supplied by GE for Susquehanna SES Unit 1 only are included in this study. These affiliated instrument circuits supplied by GE were identified in EC-QDET-1001 and are listed in Table 1 of this study.

The GE Power Range Monitoring System affiliated instrument circuits are not included since these circuits were previously analyzed in SEA-EE-180.

The affiliated circuits for the computer and annunciator systems are not included since the computer and annunciator input circuits have been previously analyzed in SEA-EE-183 and SEA-EE-184 respectively.

3.0 CONCLUSIONS

The result of the Single Failure Analysis shows that each GE affiliated circuit meets the acceptance criteria and that a common mode failure of the Non Class 1E GE instruments along with a single random failure (Fault) in the raceway system does not prevent proper protection action at the system level when required. In all cases the redundant Division (Channels) is available to perform the protection action. Also in all cases the stated safety function for each of the GE affiliated circuits is maintained.

4.0 INPUTS

The IEEE 279-1971 Single Failure Criteria shall be used since Susquehanna SES is committed to IEEE 279-1971. This Single Failure Criteria is: "Any single failure within the protection system shall not prevent proper action at the system level when required." This is applicable to the GE affiliated circuits since the non Class 1E instruments are connected to safety related components.

Credible failures for each non Class 1E component in the GE affiliated instrument circuits shall be analyzed to assure that these failures can not prevent the protection system action.

4.0 INPUTS

Credible failures to be analyzed are:

Common Mode Failures

- Non Class 1E component open circuited
- Non Class 1E component short circuited

Single Random Failures

- Open circuit of all cables in the raceways containing the cables in the GE affiliated instrument circuits
- Short circuit of all cables in the raceways containing the cables in the GE affiliated instrument circuits
- Impressed voltages up to 250 VDC nominal (288 V Max) on all cables in the raceways containing the cables in the GE affiliated instrument circuits

With the common mode failures and a single Random failure applied, the acceptance criterion is met when the following are available:

Two Division Protection System

The redundant Division of the Protection System is available to perform the required protective action.

Four Channel Protection System

Three Channels of the Protection System are available to perform the required protective action.

One Out of Two Twice Protection System (RPS) does not contain GE affiliated instruments circuits. The cables for this system are run in four separate conduit systems. Therefore no specific acceptance criterion is required for this system.

A Single Failure Analysis is to be performed for the GE supplied affiliated instrument circuits identified in EC-QDET-1001.

No analysis is required for Non Class 1E cables, in the same raceways as the GE supplied affiliated instrument circuit cables, that have Non Class 1E devices connected at both ends of the cable. These devices at both ends of the cables are Non Class 1E and are not used to mitigate the effects of a Design Base Accident (DBA). The power supplies to the Non Class 1E devices connected to each end of the Non Class 1E cables provided by Bechtel are Non Class 1E in accordance with IEEE 279-1971 except as discussed in FSAR Section 8.1.6. The power supplies to the Non Class 1E devices provided by GE are Non Class 1E except for the Class 1E power supplies evaluated in this study. R1

5.0 ASSUMPTIONS

This study applies to Unit 1 only.

For cable faults in raceways that contain conduits, the cable fault does not propagate to the cables inside the conduits since the conduits are considered barriers to the faults as demonstrated by Wyles Labs Tests NE-56719.

For digital annunciator and computer input cables in the raceways containing the cables in the GE affiliated instrument circuits, contact to coil separation is used since these interface devices have been previously evaluated by SEA-EE-183 and SEA-EE-184 and accepted by the NRC. The NRC Safety Evaluation Report dated June 28, 1991, page 12 documents the NRC acceptance of conyact to coil and contact to contact isolation for digital

5.0 ASSUMPTIONS

annunciator and computer inputs. Therefore the Separation Group of the initiating devices is not required to be identified.
The maximum credible fault voltage is considered to be 250 VDC nominal (288 V Max) for digital computer input cables in the raceways containing the cables in the GE affiliated instrument circuits. The actual digital computer input cable voltage is the voltage source to the computer input circuits which is 28 V.

The maximum credible fault voltage is considered to be 250 VDC nominal (288 V Max) for instrument loop input cables in the raceways containing the cables in the GE affiliated instrument circuits. The actual instrument loop input cable voltage is considered to be some value less than the power supply voltage since the actual voltage drop between the power supply and the instruments is not calculated. The instrument loop voltage is 24 - 120 V.

The maximum credible fault voltage is considered to be 250 VDC nominal (288 V Max) for Neutron Monitoring component cables in the raceways containing the cables in the GE affiliated instrument circuits. The actual Neutron Monitoring component cable voltage is considered to be the power supply voltage. This voltage is 5 - 120 V.

The Common Mode Failures of the Non Class 1E devices in the GE supplied affiliated circuits are assumed (per IEEE 379). These failures for the Non Class 1E devices are open circuit or short circuit. No attempt is made to determine the physical mechanism for these failures.

6.0 METHOD

The following outlines the process used to identify the components with Q Quality Classification Code that are affected by the Single Random Failure in the raceways containing the GE supplied affiliated instrument circuit cables. In the Susquehanna SES NIMS System, the Q Quality Classification Code is applied to Safety-Related Equipment or Components. All are subject to the requirements of the Susquehanna SES Operation Quality Assurance Program. Not all Safety-Related components perform an electrical safety-related function (i.e. Class 1E). An example is a valve that is a Containment Boundary. This valve is Q Quality Classification since it is needed to maintain Containment integrity, but performs no electrical safety-related function.

Identify the cables for the GE supplied affiliated instrument circuits identified in EC-QDET-1001 by reviewing the instrument loop diagrams, GE Elementary Diagrams and the Scheme Drawings.

For each GE supplied affiliated instrument circuit, identify all cables in the raceway system that come in contact with cables for the GE supplied affiliated instrument circuit. This was accomplished by an electronic sort of the CARTS database.

For each cable in the raceway system that comes in contact with cables for the GE supplied affiliated instrument circuit, identify the devices connected to the cable, the Separation Groups and Isolation Method. Microsoft ACCESS database program shall be used to record this data.

Identify all the Q classified devices that are connected to cables that come in contact with the GE supplied affiliated instrument circuit cables. This was accomplished by selecting Q classified devices from the Microsoft ACCESS database.

These Q classified devices, without electrical isolation, that are connected to cables that come in contact, in the racway system, with the GE supplied affiliated instrument circuit cables are the devices that must be analyzed for a Single Random Failure in the Single Failure Analysis for the affiliated instrument circuits supplied by GE for Susquehanna SES Unit 1. The Q classified devices which are isolated through Qualified Electrical Isolation Devices (Listed in FSAR Chapter 8) are not required to be addressed in the Single Failure Analysis since these devices have demonstrated their capability to prevent faults in the Non Class 1E circuits from adversely effecting the Class 1E circuits.

The following outlines the process used to perform the Single Failure Analysis for the GE supplied affiliated instrument circuits.

6.0 METHOD

The Single Failure Analysis is formatted consistent with the format of IEEE 352-1975 Appendix A except method of detection of the failure is not included.

For each of the GE supplied affiliated instrument circuits listed in Table 1 (previously identified in EC-QDET-1001), Identify the Safety Function of the circuit containing the GE supplied affiliated components and identify the Non Class 1E devices in the GE supplied affiliated instrument circuits.

For each identified Non Class 1E device and Q classified/Non Class 1E Interface, such as Dual Element RTDs and thermocouples, identify the Failure Modes, Local Effects including Dependent Failures and System Effects.

For each identified Non Class 1E device and Q classified/Non Class 1E Interface Failure Modes, review the GE supplied affiliated instrument circuit to assure the Single Failure Acceptance Criteria is met and state the reason for meeting the acceptance criteria.

For each identified Non Class 1E device, the raceway Single Random Failures along with the Non Class 1E device failure shall be analyzed. The Local Effects include impact on all Q classified devices identified as connected to cables in contact with the GE supplied affiliated instrument circuit cables.

For each identified Q classified device, review the circuit to assure the Single Failure Acceptance Criteria is met for the raceway Single Random Failures and state the reason for meeting the acceptance criterion.

There is no conditions where the Single Failure Criteria is not met. R1

7.0 REFERENCES

IEEE 384 -1974	IEEE Standard Criteria for Independence of Class 1E Equipment and Circuits
DBD005	Design Basis Document for Single Failure and Separation Criteria
IEEE 279-1971	Criteria for Protection Systems for Nuclear Power Generating Stations
IEEE 379-1977	IEEE Standard Application of the Single Failure Criterion to Nuclear Generating Station Class 1E Systems
NEDO-10139	Compliance of Protection Systems to Industry Criteria: General Electric BWR Nuclear Steam Supply System
NE-56719	Electrical Wire and Cable Isolation Barrier Materials Test for the Susquehanna SES Units 1 and 2
SEA-EE-183 (EC-031-0504)	Evaluation of Unit 1 Computer Class 1E - Non Class 1E Interfaces
SEA-EE-184 (EC-031-0505)	Evaluation of Unit 1 Annunciator Class 1E - Non Class 1E Interfaces
SEA-EE-180 (EC-EPVS-0509)	Evaluation of General Electric Nuclear Steam Supply System for Compliance to IEEE 279-1971
IEEE 352-1975	IEEE Guide for General Principles of Reliability Analysis of Nuclear Power Generating Station Protection Systems
E-1012 Rev 1	Specification for Electrical Separation Criteria

7.0 REFERENCES

SEA-JNPE-198 (EC-062-0536)	Regulatory Guide 1.97 Instruments
EC-QDET-1001	Evaluation of Affiliated Circuits supplied by General Electric
FSAR	Chapter 6 and 8
NPE-89-004	Coping Assessment for the SSES During Station Blackout
SEA-JNPE-161	Instrumentation Availability During Station Blackout
NDAP-QA-0155	Quality Assurance Requirements for Station Blackout
E0-100-30	Unit 1 Response to Station Blackout

R1

8.0 EVALUATION

In order to provide an overview of the GE supplied affiliated circuits, the GE affiliated circuits in Table 1 have been broken down into typical categories as requested by the NRC. Figures 1 -9 represent these categories. The category 10 circuits in Revision 0 of this study have been included in category 2 for this Revision

R1

The affiliated instrument circuits supplied by GE for Susquehanna SES Unit 1 are listed in Table 1. These affiliated instrument circuits were previously identified in EC-QDET-1001. This table also includes the cable connecting the Q component to the Non Class 1E component.

At Susquehanna SES, the cables for the GE supplied affiliated instrument circuits can be routed through the PCGG Floor Modules in the Upper and Lower Relay Rooms. These Floor Modules may contain Class 1E cables. Once the GE supplied affiliated instrument circuit cables exit the Floor Modules they are routed through Non Class 1E raceway.

For each GE affiliated instrument circuit, a Single Failure Analysis was performed and documented in the Appendices listed in Table 1. The Single Failure Analysis accounted for the common mode failure of the Non Class 1E component in the GE affiliated circuit and a fault in the raceway system containing the cable for the GE affiliated circuit as the Single Random Failure. All Q components connected to cables in contact with the GE affiliated circuit cable were analyzed for the effects of the faults in the raceways. The list of Q components connected to cables in contact with the GE affiliated cable for each GE affiliated circuit are listed in the Appendix K. The evaluation of the effects of the raceway faults on the Q components is included in Appendix J.

R1

The Electrical Separation Group identifiers, listed in E-1012 "Specification for Electrical Separation Criteria", were used to determine the Division/Channel for the Q classified components.

Cables assigned to Division/Channel and Division Affiliated/Chanel Affiliated separation groups are addressed in the Single Failure Analysis as Loss of the Division/Channel. Therefore, there is no need for analysis of individual components connected to these cables.

The result of the Single Failure Analysis shows that each GE affiliated circuit meets the acceptance criteria and that the common mode failure along with the single random failure in the raceway system does not prevent proper protection action at the system level when required. In all cases the redundant Division (Channels) is available to perform the protection action. Also in all cases the stated safety function for each of the GE affiliated circuits is maintained.

8.0 EVALUATION

The affiliated instrument circuits supplied by GE are not required by the Emerengency Operating Procedures (EOPs) except for the instruments listed below which are needed for E0-100-030 Unit 1 Response to Station Blackout. This is based upon a review of the EOPs

HPCI	RCIC
PI-E41-1R603	PI-E51-1R601
PI-E41-1R606	PI-E51-1R603
SI-E41-1R604	PI-E51-1R604
	SI-15001A

R1

The above listed non safety grade instruments important to Station Blackout are included in the limited QA Program . This program is less stringent than that required for safety grade equipment and does not include seismic considerations. NDAP-QA-0155 recognizes the QA requirements for Station Blackout equipment. Therefore the above listed instruments are acceptable.

Table1

FROM COMPONENT	QClass	CABLE	TO COMPONENT	QCLASS	Analysis	Category
TE-B21-1N010A (Temperature Element)	Q	JM1Q0708D	TDRS-G33-1N605 (Temperature Recorder)	Non Class 1E	Appendix A	01
TE-B21-1N016A (Temperature Element)	Q	JM1Q0708C	TDRS-G33-1N605 (Temperature Recorder)	Non Class 1E	Appendix A	01
TE-E11-1N029A (Temperature Element)	Q	JM1Q0708E	TDRS-G33-1N605 (Temperature Recorder)	Non Class 1E	Appendix A	01
TE-E11-1N029C (Temperature Element)	Q	JM1Q0708P	TDRS-G33-1N605 (Temperature Recorder)	Non Class 1E	Appendix A	01
TE-E11-1N030A (Temperature Element)	Q	JM1Q0708F	TDRS-G33-1N605 (Temperature Recorder)	Non Class 1E	Appendix A	01
TE-E11-1N030C (Temperature Element)	Q	JM1Q0708Q	TDRS-G33-1N605 (Temperature Recorder)	Non Class 1E	Appendix A	01
TE-E41-1N028A (Temperature Element)	Q	JM1Q0708J	TDRS-G33-1N605 (Temperature Recorder)	Non Class 1E	Appendix A	01
TE-E41-1N029A (Temperature Element)	Q	JM1Q0708K	TDRS-G33-1N605 (Temperature Recorder)	Non Class 1E	Appendix A	01
TE-E51-1N021A (Temperature Element)	Q	LM1Q0711C	TDRS-G33-1N605 (Temperature Recorder)	Non Class 1E	Appendix A	01
TE-E51-1N022A (Temperature Element)	Q	LM1Q0711D	TDRS-G33-1N605 (Temperature Recorder)	Non Class 1E	Appendix A	01
TE-E51-1N026A (Temperature Element)	Q	LM1Q0711E	TDRS-G33-1N605 (Temperature Recorder)	Non Class 1E	Appendix A	01
TE-E51-1N026C (Temperature Element)	Q	JM1Q0708L	TDRS-G33-1N605 (Temperature Recorder)	Non Class 1E	Appendix A	01
TE-E51-1N027A (Temperature Element)	Q	LM1Q0711F	TDRS-G33-1N605 (Temperature Recorder)	Non Class 1E	Appendix A	01
TE-E51-1N027C (Temperature Element)	Q	JM1Q0708M	TDRS-G33-1N605 (Temperature Recorder)	Non Class 1E	Appendix A	01
TE-G33-1N022A (Temperature Element)	Q	JM1Q0708T	TDRS-G33-1N605 (Temperature Recorder)	Non Class 1E	Appendix A	01
TE-G33-1N022C (Temperature Element)	Q	JM1Q0708V	TDRS-G33-1N605 (Temperature Recorder)	Non Class 1E	Appendix A	01
TE-G33-1N022E (Temperature Element)	Q	JM1Q0708X	TDRS-G33-1N605 (Temperature Recorder)	Non Class 1E	Appendix A	01
TE-G33-1N023A(Temperature Element)	Q	JM1Q0708U	TDRS-G33-1N605 (Temperature Recorder)	Non Class 1E	Appendix A	01

Table1

FROM COMPONENT	QClass	CABLE	TO COMPONENT	QCLASS	Analysis	Category
TE-G33-1N023C (Temperature Element)	Q	JM1Q0708W	TDRS-G33-1N605 (Temperature Recorder)	Non Class 1E	Appendix A	01
TE-G33-1N023E (Temperature Element)	Q	JM1Q0708Y	TDRS-G33-1N605 (Temperature Recorder)	Non Class 1E	Appendix A	01
1Y216-02 (Power Supply)	Q	Panel Wiring	TRS-E11-1R601 (Temperature Recorder)	Non Class 1E	Appendix A	01
TE-E11-1N004A (Temperature Element)	Q	NM1Q3071C	TRS-E11-1R601 (Temperature Recorder)	Non Class 1E	Appendix A	01
TE-E11-1N004B (Temperature Element)	Q	NM1Q3071J	TRS-E11-1R601 (Temperature Recorder)	Non Class 1E	Appendix A	01
TE-E11-1N017A (Temperature Element)	Q	NM1Q3071E	TRS-E11-1R601 (Temperature Recorder)	Non Class 1E	Appendix A	01
TE-E11-1N017B (Temperature Element)	Q	NM1Q3071L	TRS-E11-1R601 (Temperature Recorder)	Non Class 1E	Appendix A	01
TE-E11-1N017C (Temperature Element)	Q	NM1Q3071F	TRS-E11-1R601 (Temperature Recorder)	Non Class 1E	Appendix A	01
TE-E11-1N017D (Temperature Element)	Q	NM1Q3071M	TRS-E11-1R601 (Temperature Recorder)	Non Class 1E	Appendix A	01
TE-E11-1N027A (Temperature Element)	Q	NM1Q3071G	TRS-E11-1R601 (Temperature Recorder)	Non Class 1E	Appendix A	01
TE-E11-1N027B (Temperature Element)	Q	NM1Q3071N	TRS-E11-1R601 (Temperature Recorder)	Non Class 1E	Appendix A	01
TE-E11-1N032A (Temperature Element)	Q	NM1Q3071H	TRS-E11-1R601 (Temperature Recorder)	Non Class 1E	Appendix A	01
TE-E11-1N032B (Temperature Element)	Q	NM1Q3071P	TRS-E11-1R601 (Temperature Recorder)	Non Class 1E	Appendix A	01
TE-10100A (Temperature Element)	Q	JM1Q0707T	TRS-G33-1N604 (Temperature Recorder)	Non Class 1E	Appendix A	01
TE-B21-1N014A (Temperature Element)	Q	JM1Q0707C	TRS-G33-1N604 (Temperature Recorder)	Non Class 1E	Appendix A	01
TE-E11-1N009A (Temperature Element)	Q	JM1Q0707D	TRS-G33-1N604 (Temperature Recorder)	Non Class 1E	Appendix A	01
TE-E11-1N009C (Temperature Element)	Q	JM1Q0707E	TRS-G33-1N604 (Temperature Recorder)	Non Class 1E	Appendix A	01
TE-E41-1N024A (Temperature Element)	Q	JM1Q0707F	TRS-G33-1N604 (Temperature Recorder)	Non Class 1E	Appendix A	01

FROM COMPONENT	QClass	CABLE	TO COMPONENT	QCLASS	Analysis	Category
TE-E41-1N030A (Temperature Element)	Q	JM1Q0707G	TRS-G33-1N604 (Temperature Recorder)	Non Class 1E	Appendix A	01
TE-E51-1N011A (Temperature Element)	Q	LM1Q0711G	TRS-G33-1N604 (Temperature Recorder)	Non Class 1E	Appendix A	01
TE-E51-1N023A (Temperature Element)	Q	LM1Q0711H	TRS-G33-1N604 (Temperature Recorder)	Non Class 1E	Appendix A	01
TE-E51-1N025A (Temperature Element)	Q	LM1Q0711J	TRS-G33-1N604 (Temperature Recorder)	Non Class 1E	Appendix A	01
TE-E51-1N025C (Temperature Element)	Q	JM1Q0707H	TRS-G33-1N604 (Temperature Recorder)	Non Class 1E	Appendix A	01
TE-G33-1N016A (Temperature Element)	Q	JM1Q0707M	TRS-G33-1N604 (Temperature Recorder)	Non Class 1E	Appendix A	01
TE-G33-1N016C (Temperature Element)	Q	JM1Q0707N	TRS-G33-1N604 (Temperature Recorder)	Non Class 1E	Appendix A	01
TE-G33-1N016E (Temperature Element)	Q	JM1Q0707P	TRS-G33-1N604 (Temperature Recorder)	Non Class 1E	Appendix A	01
PT-E11-1N026A (Pressure Transmitter)	Q	EM1PM1302	PI-E11-1R606A1 (Pressure Indicator)	Non Class 1E	Appendix B	02
PT-E11-1N026B (Pressure Transmitter)	Q	FM1PM1204	PI-E11-1R606B1 (Pressure Indicator)	Non Class 1E	Appendix B	02
PT-E21-1N001A (Pressure Transmitter)	Q	EK1PN1301	PI-E21-1R600A (Pressure Indicator)	Non Class 1E	Appendix B	02
PT-E21-1N001B (Pressure Transmitter)	Q	FM1PN1201	PI-E21-1R600B (Pressure Indicator)	Non Class 1E	Appendix B	02
PT-E41-1N013 (Pressure Transmitter)	Q	FM1PP1203	PI-E41-1R602 (Pressure Indicator)	Non Class 1E	Appendix B	02
PT-E41-1N016 (Pressure Transmitter)	Q	FM1PP1203	PI-E41-1R603 (Pressure Indicator)	Non Class 1E	Appendix B	02
PT-E41-1N019 (Pressure Transmitter)	Q	FM1PP1203	PI-E41-1R606 (Pressure Indicator)	Non Class 1E	Appendix B	02
PT-E51-1N004 (Pressure Transmitter)	Q	EM1PQ1302	PI-E51-1R601 (Pressure Indicator)	Non Class 1E	Appendix B	02
PT-E51-1N007 (Pressure Transmitter)	Q	EM1PQ1302	PI-E51-1R602 (Pressure Indicator)	Non Class 1E	Appendix B	02
PT-E51-1N008 (Pressure Transmitter)	Q	EM1PQ1302	PI-E51-1R603 (Pressure Indicator)	Non Class 1E	Appendix B	02

FROM COMPONENT	QClass	CABLE	TO COMPONENT	QCLASS	Analysis	Category
PT-E51-1N005 (Pressure Transmitter)	Q	EM1PQ1302	PI-E51-1R604 (Pressure Indicator)	Non Class 1E	Appendix B	02
RCIC Governor Control	Q	EM1Q1319E	SI-15001A (Indicating Meter)	Non Class 1E	Appendix B	02
HPCI Governor Control	Q	FM1Q4022C	SI-E41-1R604 (Indicating Meter)	Non Class 1E	Appendix B	02
FT-E11-1N013 (Flow Transmitter)	Q	Panel Wiring	1Y218-03 (Power Supply)	Non Class 1E	Appendix C	03
PT-C41-1N004 (Pressure Transmitter)	Q	Panel Wiring	1Y218-07 (Power Supply)	Non Class 1E	Appendix C	03
LITS-B21-1N026D (Level Indicating Switch)	Q	Panel Wiring	1Y218-09 (Power Supply)	Non Class 1E	Appendix C	03
FT-E11-1N013 (Flow Transmitter)	Q	NM1PM1307	FI-E11-1R607 (Flow Indicator)	Non Class 1E	Appendix C	03
LITS-B21-1N026D (Level Indicating Switch)	Q	NM1P1F101	LI-B21-1R604 (Level Indicator)	Non Class 1E	Appendix C	03
PT-C41-1N004 (Pressure Transmitter)	Q	NM1Q0206C	PI-C41-1R600 (Pressure Indicator)	Non Class 1E	Appendix C	03
PT-C41-1N004 (Pressure Transmitter)	Q	NK1C41004	PI-C41-1R600 (Pressure Indicator)	Non Class 1E	Appendix C	03
1Y216-22 (Power Supply)	Q	Panel Wiring	CISH-E11-1R001A (Conductivity Indicating Sw)	Non Class 1E	Appendix D	04
CE-E11-1N001A (Conductivity Element)	Q	NM1Q3070C	CISH-E11-1R001A (Conductivity Indicating Sw)	Non Class 1E	Appendix D	04
1Y226-24 (Power Supply)	Q	Panel Wiring	CISH-E11-1R001B (Conductivity Indicating Sw)	Non Class 1E	Appendix D	04
CE-E11-1N001B (Conductivity Element)	Q	NM1Q3070D	CISH-E11-1R001B (Conductivity Indicating Sw)	Non Class 1E	Appendix D	04
1Y226-02 (Power Supply)	Q	Panel Wiring	FR-E11-1R608 (Flow Recorder)	Non Class 1E	Appendix D	04
FY-E11-1K600A (Square Root Extr)	Q	Panel Wiring	FR-E11-1R608 (Flow Recorder)	Non Class 1E	Appendix D	04
FY-E11-1K600B (Square Root Extr)	Q	Panel Wiring	FR-E11-1R608 (Flow Recorder)	Non Class 1E	Appendix D	04
1Y226-24 (Power Supply)	Q	NM1Q3070E	CE-E11-1N025 (Conductivity Element)	Non Class 1E	Appendix E	05

FROM COMPONENT	QClass	CABLE	TO COMPONENT	QCLASS	Analysis	Category
1Y226-24 (Power Supply)	Q	Panel Wiring	CI-E11-1R006 (Conductivity Indicator)	Non Class 1E	Appendix E	05
1Y236-02 (Power Supply)	Q	Panel Wiring	CR-12351 (Conductivity Recorder)	Non Class 1E	Appendix E	05
1Y236-02 (Power Supply)	Q	Panel Wiring	LR-16113 Level Recorder)	Non Class 1E	Appendix E	05
1Y236-02 (Power Supply)	Q	Panel Wiring	LR/FR-16102 (Level, Flow Recorder)	Non Class 1E	Appendix E	05
1D614-01 (Power Supply)	Q	EK1E51008	LSH-15020 (Level Switch)	Non Class 1E	Appendix E	05
1Y226-07 (Power Supply)	Q	Panel Wiring	TISH-G33-1N008 (Temperature Indicating Switch)	Non Class 1E	Appendix E	05
1Y246-01 (Power Supply)	Q	Panel Wiring	TR-E41-1R605 (Temperature Recorder)	Non Class 1E	Appendix E	05
FDSH-G33-1N603A (Flow Differential Switch)	Q	Panel Wiring	1Y218-12 (Power Supply)	Non Class 1E	Appendix F	06
FDSH-G33-1N603B (Flow Differential Switch)	Q	Panel Wiring	1Y218-12 (Power Supply)	Non Class 1E	Appendix F	06
FT-G33-1N012 (Flow Transmitter)	Q	Panel Wiring	1Y218-12 (Power Supply)	Non Class 1E	Appendix F	06
FT-G33-1N036 (Flow Transmitter)	Q	Panel Wiring	1Y218-12 (Power Supply)	Non Class 1E	Appendix F	06
FT-G33-1N041 (Flow Transmitter)	Q	Panel Wiring	1Y218-12 (Power Supply)	Non Class 1E	Appendix F	06
FY-G33-1K602 (Signal Conditioner)	Q	Panel Wiring	1Y218-12 (Power Supply)	Non Class 1E	Appendix F	06
FY-G33-1K603 (Signal Conditioner)	Q	Panel Wiring	1Y218-12 (Power Supply)	Non Class 1E	Appendix F	06
FY-G33-1K604 (Signal Conditioner)	Q	Panel Wiring	1Y218-12 (Power Supply)	Non Class 1E	Appendix F	06
FY-G33-1K605 (Signal Conditioner)	Q	Panel Wiring	1Y218-12 (Power Supply)	Non Class 1E	Appendix F	06
FY-G33-1K604 (Signal Conditioner	Q	Panel Wiring	FDI-G33-1R615 (Flow Differential Indicator)	Non Class 1E	Appendix F	06
FY-G33-1K605 (Signal Conditioner)	Q	NM1PPF101	FI-G33-1R602 (Flow Indicator)	Non Class 1E	Appendix F	06

Table1

FROM COMPONENT	QClass	CABLE	TO COMPONENT	QCLASS	Analysis	Category
FY-G33-1K602 (Signal Conditioner)	Q	NM1PPF101	FI-G33-1R609 (Flow Indicator)	Non Class 1E	Appendix F	06
RISHH-D12-0K617A (Radiation Indicating Sw)	Q	NM1PK0602	RR-D12-0R609 (Radiation Recorder)	Non Class 1E	Appendix G	07
RISHH-D12-0K617B (Radiation Indicating Sw)	Q	NM1PK3302	RR-D12-0R609 (Radiation Recorder)	Non Class 1E	Appendix G	07
RISHH-D12-0K618A (Radiation Indicating Sw)	Q	NM1PK0602	RR-D12-0R610 (Radiation Recorder)	Non Class 1E	Appendix G	07
RISHH-D12-0K618B (Radiation Indicating Sw)	Q	NM1PK3302	RR-D12-0R610 (Radiation Recorder)	Non Class 1E	Appendix G	07
RISHH-D12-1K609A (Radiation Indicating Sw)	Q	NM1PK0602	RR-D12-1R605 (Radiation Recorder)	Non Class 1E	Appendix G	07
RISHH-D12-1K609B (Radiation Indicating Sw)	Q	NM1PK3302	RR-D12-1R605 (Radiation Recorder)	Non Class 1E	Appendix G	07
RISHH-D12-1K615A (Radiation Indicating Sw)	Q	NM1PK0602	RR-D12-1R607 (Radiation Recorder)	Non Class 1E	Appendix G	07
RISHH-D12-1K615B (Radiation Indicating Sw)	Q	NM1PK3302	RR-D12-1R607 (Radiation Recorder)	Non Class 1E	Appendix G	07
RISHH-D12-1K616A (Radiation Indicating Sw)	Q	NM1PK0602	RR-D12-1R608 (Radiation Recorder)	Non Class 1E	Appendix G	07
RISHH-D12-1K616B (Radiation Indicating Sw)	Q	NM1PK3302	RR-D12-1R608 (Radiation Recorder)	Non Class 1E	Appendix G	07
APRM Channel A	Q	NM1PE4110	NR-C51-1R603A (Neutron Flux Recorder)	Non Class 1E	Appendix H	08
APRM Channel C	Q	NM1PE4110	NR-C51-1R603A (Neutron Flux Recorder)	Non Class 1E	Appendix H	08
IRM Channel A	Q	NM1PQ4101	NR-C51-1R603A (Neutron Flux Recorder)	Non Class 1E	Appendix H	08
IRM Channel C	Q	NM1PQ4101	NR-C51-1R603A (Neutron Flux Recorder)	Non Class 1E	Appendix H	08
APRM Channel B	Q	NM1PE4109	NR-C51-1R603B (Neutron Flux Recorder)	Non Class 1E	Appendix H	08
APRM Channel D	Q	NM1PE4103	NR-C51-1R603B (Neutron Flux Recorder)	Non Class 1E	Appendix H	08
IRM Channel B	Q	NM1PDX01	NR-C51-1R603B (Neutron Flux Recorder)	Non Class 1E	Appendix H	08

FROM COMPONENT	QClass	CABLE	TO COMPONENT	QCLASS	Analysis	Category
IRM Channel D	Q	NM1PDX02	NR-C51-1R603B (Neutron Flux Recorder)	Non Class 1E	Appendix H	08
APRM Channel E	Q	NM1PE4112	NR-C51-1R603C (Neutron Flux Recorder)	Non Class 1E	Appendix H	08
IRM Channel E	Q	NM1PQ4101	NR-C51-1R603C (Neutron Flux Recorder)	Non Class 1E	Appendix H	08
IRM Channel G	Q	NM1PQ4101	NR-C51-1R603C (Neutron Flux Recorder)	Non Class 1E	Appendix H	08
APRM Channel F	Q	NM1PE4101	NR-C51-1R603D (Neutron Flux Recorder)	Non Class 1E	Appendix H	08
IRM Channel F	Q	NM1PDX01	NR-C51-1R603D (Neutron Flux Recorder)	Non Class 1E	Appendix H	08
IRM Channel H	Q	NM1PDX02	NR-C51-1R603D (Neutron Flux Recorder)	Non Class 1E	Appendix H	08
FE-14806 (Flow Element)	Q	NK1I4801B	1Y629-22 (Power Supply)	Non Class 1E	Appendix I	09
FT-14806 (Flow Transmitter)	Q	NK1I4801B	1Y629-22 (Power Supply)	Non Class 1E	Appendix I	09
LI/FI-14806 (Level, Flow Indicator)	Q	NK1I4801B	1Y629-22 (Power Supply)	Non Class 1E	Appendix I	09
FE-14806 (Flow Element)	Q	NM1I4801D,E	FT-14806 (Flow Transmitter)	Q	Appendix I	09
LI/FI-14806 (Level, Flow Indicator)	Q	NM1I4801C	FT-14806 (Flow Transmitter)	Q	Appendix I	09
LI/FI-14806 (Level, Flow Indicator)	Q	NM1PC1301	LT-C41-1N001 (Level Transmitter)	Non Class 1E	Appendix I	09
LI/FI-14806 (Level, Flow Indicator)	Q	NM1Q0206D	LT-C41-1N001 (Level Transmitter)	Non Class 1E	Appendix I	09

CATEGORY 1

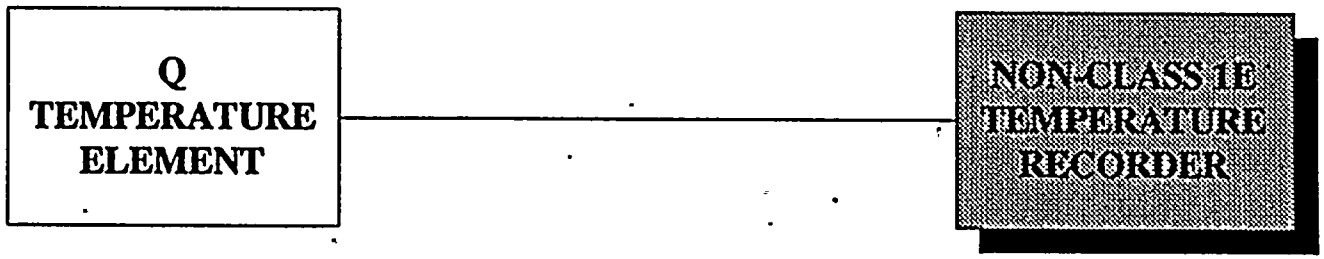

FIGURE 1

GE1CAT1.VSD

CATEGORY 2

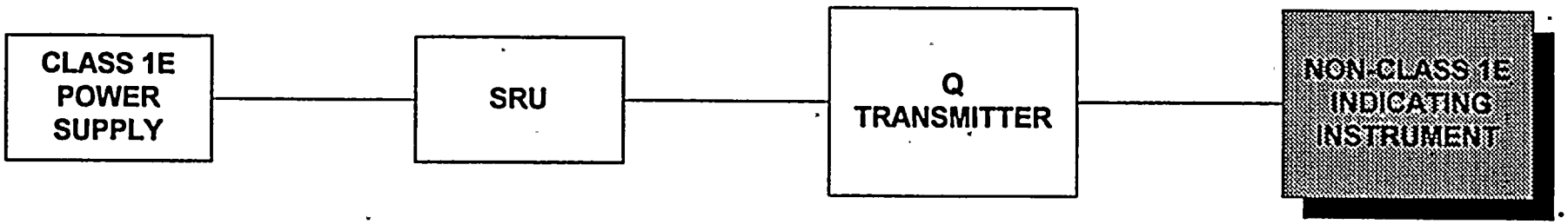

FIGURE 2

GE1CAT2.VSD

CATEGORY 3

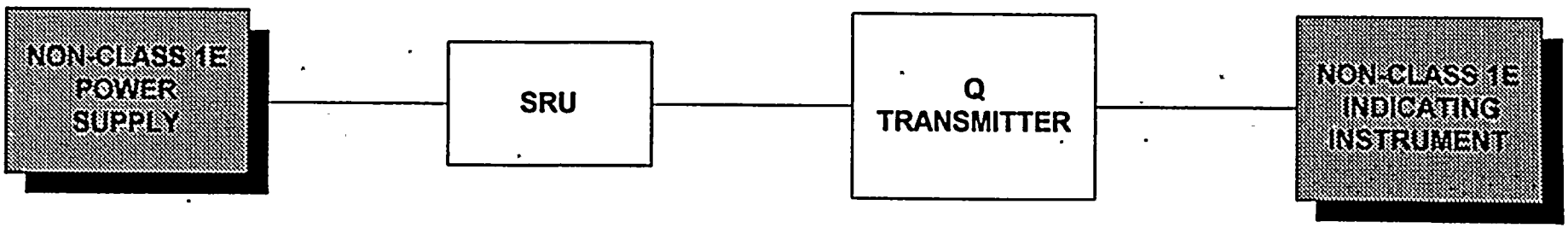

FIGURE 3

GE1CAT3.VSD

CATEGORY 4

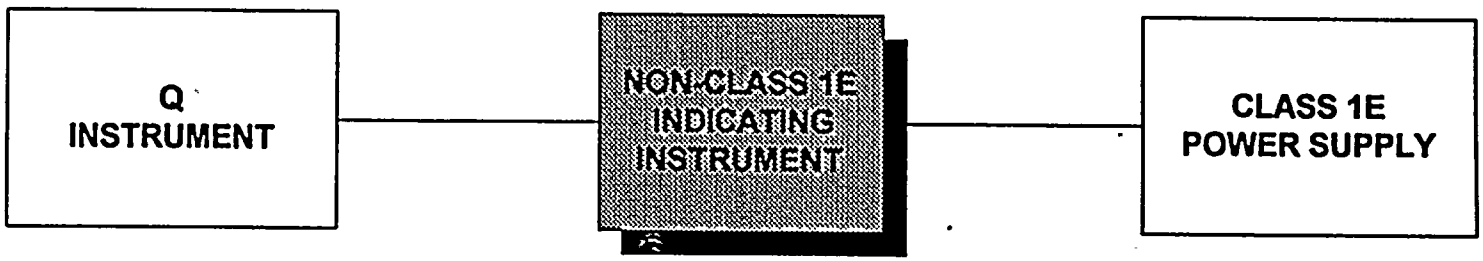

FIGURE 4

GE1CAT4.VSD

CATEGORY 5

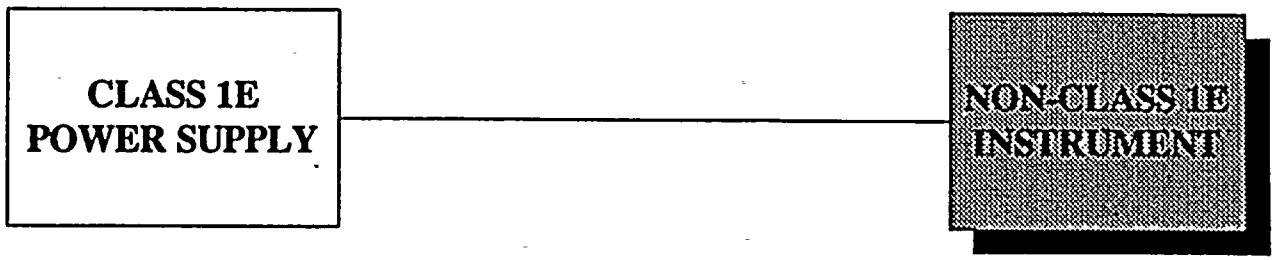

FIGURE 5

GE1CAT5.VSD

CATEGORY 6

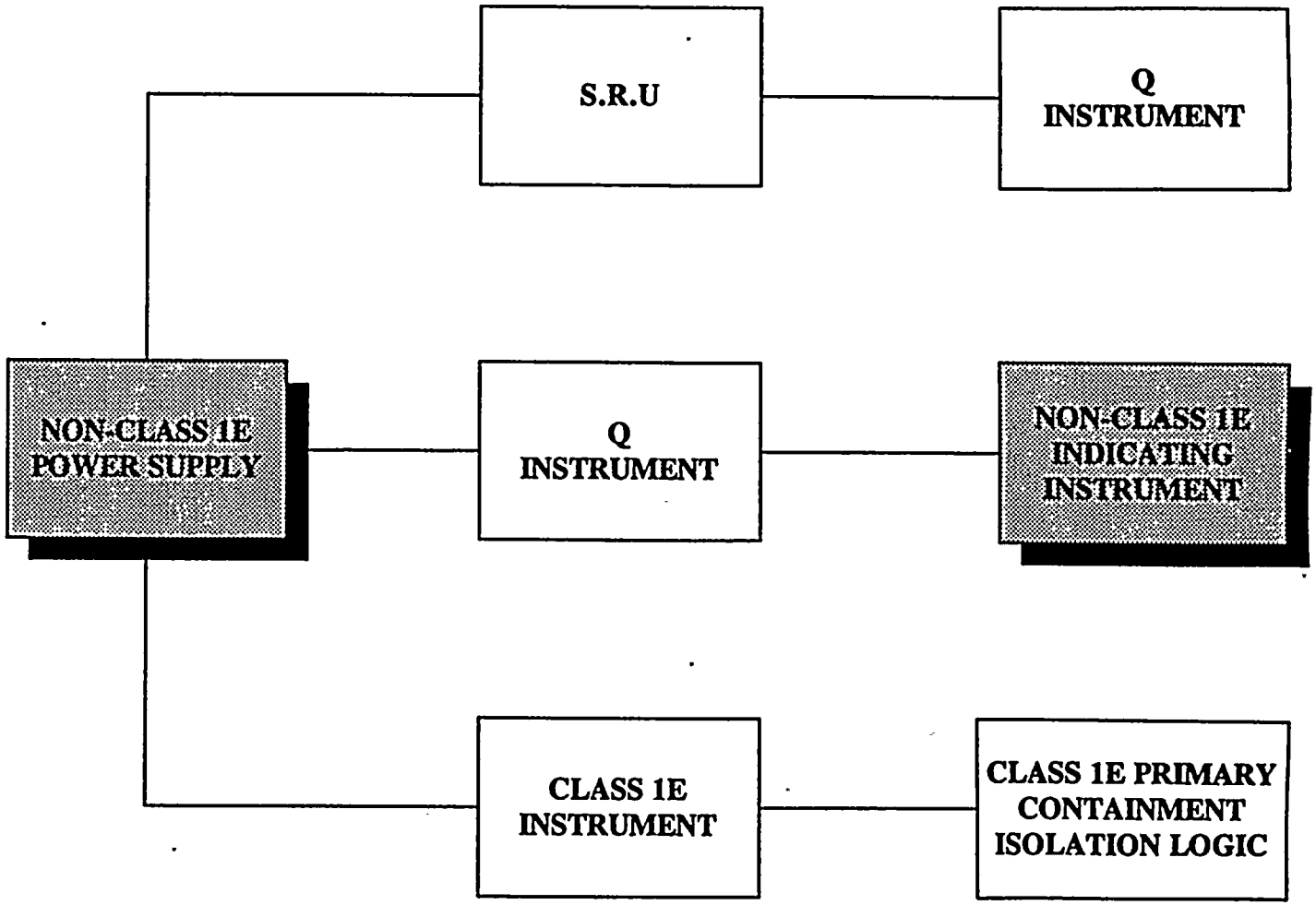

FIGURE 6

GE1CAT6.VSD

CATEGORY 7

FIGURE 7

GE1CAT7.VSD

CATEGORY 8

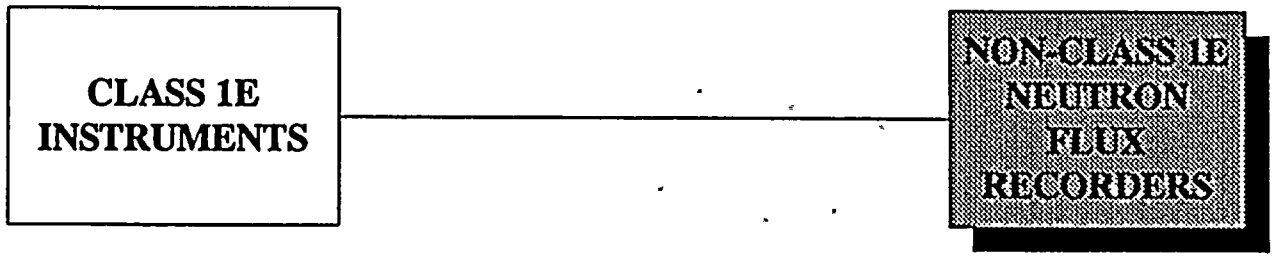

FIGURE 8

GE1CAT8.VSD

CATEGORY 9

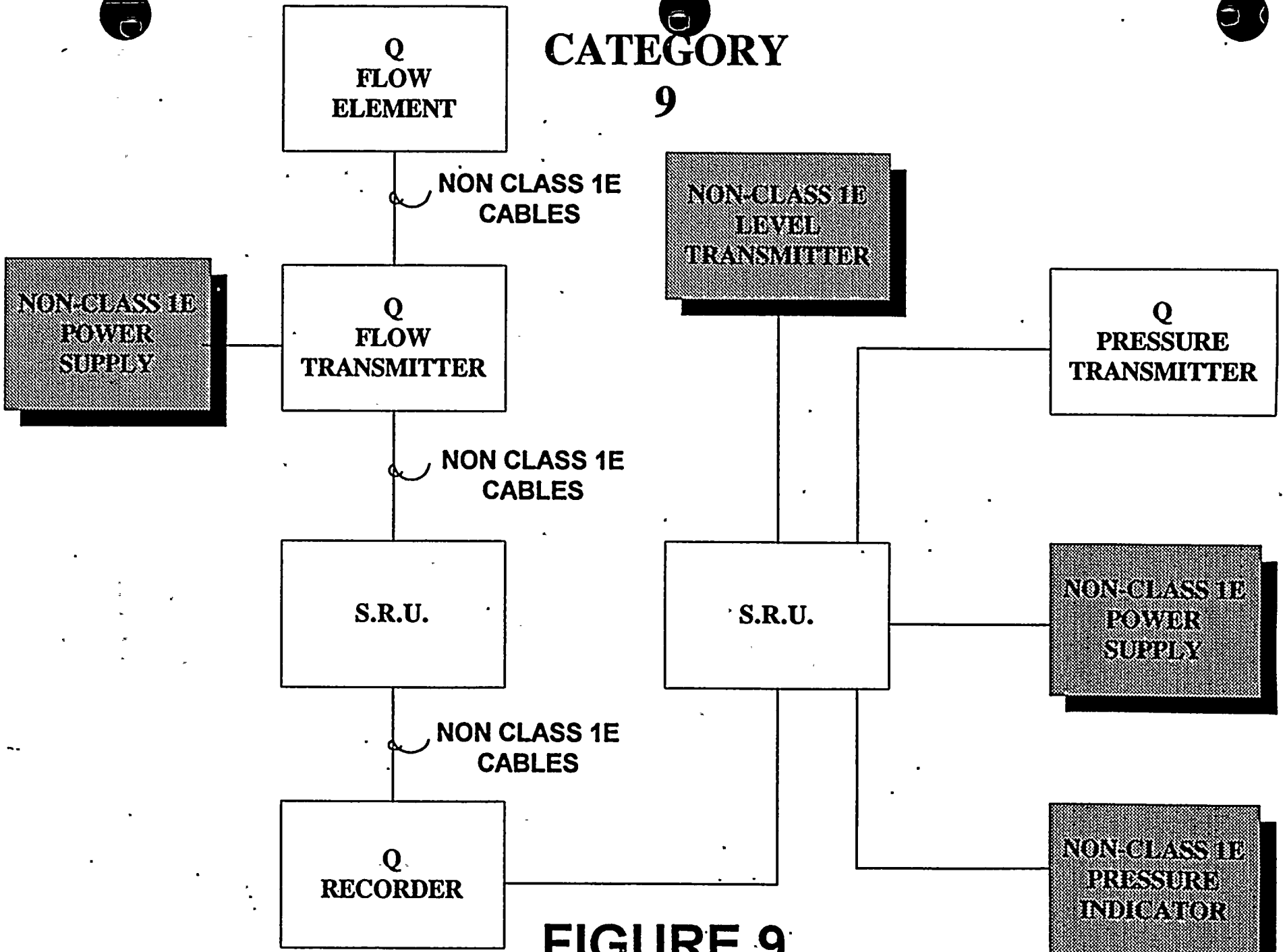

FIGURE 9

GE1CAT9.VSD

APPENDIX A

SINGLE FAILURE ANALYSIS FOR CATEGORY 1 GE SUPPLIED NON CLASS 1E INSTRUMENTS CONNECTED TO Q CLASSIFIED INSTRUMENTS

CATEGORY 1

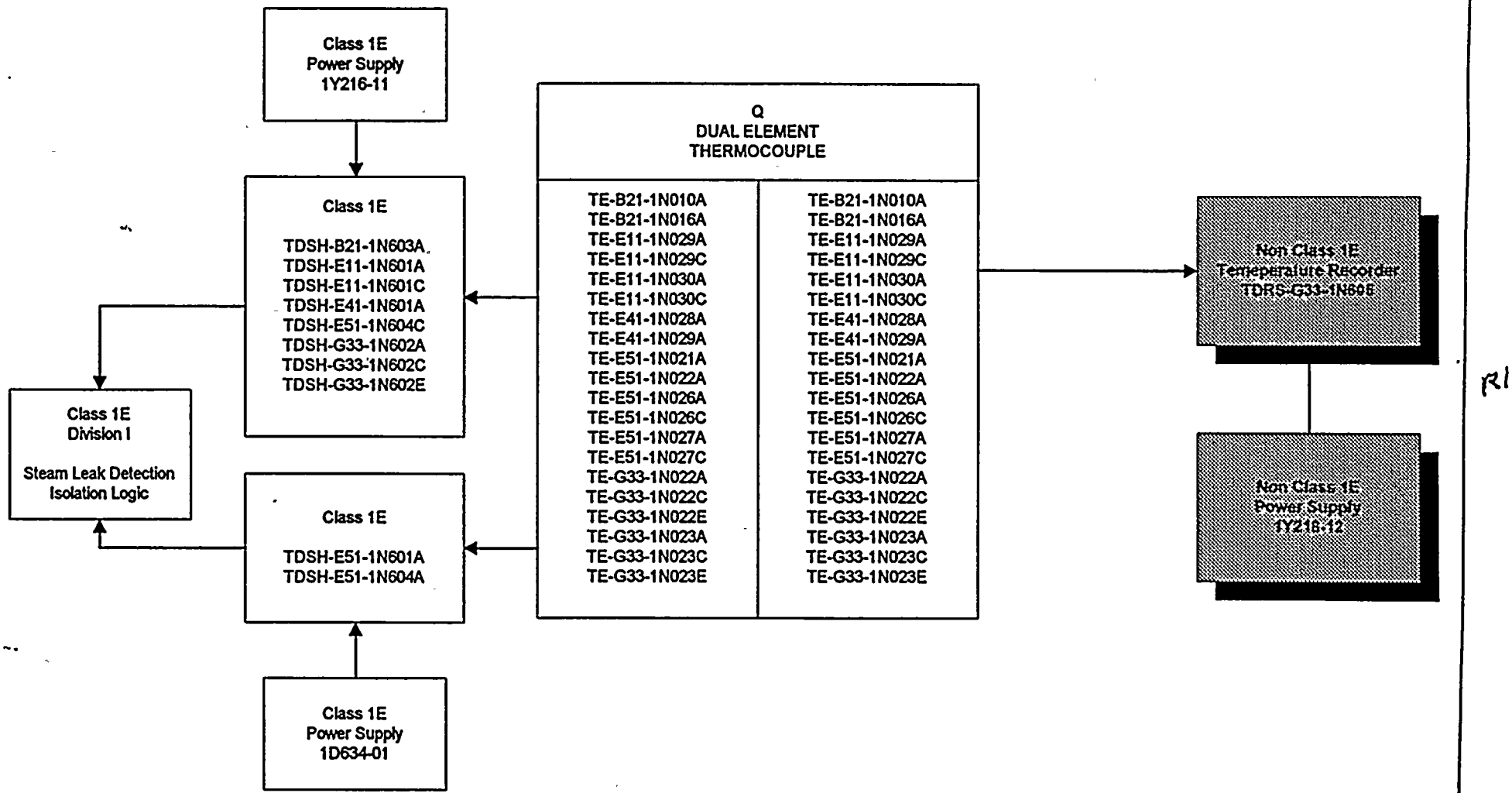

GE1CAT11.VSD

SAFETY FUNCTION: STEAM LEAK - PRIMARY CONTAINMENT ISOLATION
NON CLASS 1E COMPONENTS: TDRS-G33-1N605 (Recorder)

COMPONENT ID	FAILURE MODE	LOCAL EFFECTS INCLUDING DEPENDENT FAILURES	SYSTEM EFFECTS	SINGLE FAILURE MET	REMARKS	
TE-B21-1N010A TE-B21-1N016A TE-E41-1N028A TE-E11-1N029A	All combinations of thermocouples in left column Fail Low or As Is	No initiating signal to Steam Leak isolation logic Hi Temp	None	YES	Division II Steam Leak isolation logic for High Temp available	
TE-E41-1N029A TE-E11-1N029C		Incorrect Temp Recorder Reading	None	YES	Recorder not required for DBA or for EOPs	R1
TE-E11-1N030A TE-E11-1N030C		No Alarm	None	YES	Alarm not required for DBA or EOPs	R1
TE-E51-1N021A TE-E51-1N022A TE-E51-1N026A TE-E51-1N026C TE-E51-1N027A TE-E51-1N027C TE-G33-1N022A TE-G33-1N022C TE-G33-1N022E TE-G33-1N023A TE-G33-1N023C TE-G33-1N023E (Thermocouples Dual Elements) (Class 1E/ Non Class 1E Interface)						
TDRS-G33-1N605 Temperature Recorder (Non Class 1E)	Open Recorder	Loss of Temp Recorder Reading; No Alarm	None	YES	Recorder/Alarm not required for DBA or for EOPs	R1
	Short Recorder	Loss of Temp Recorder Reading; No Alarm	None	YES	Recorder/Alarm not required for DBA or for EOPs	R1

SAFETY FUNCTION: STEAM LEAK - PRIMARY CONTAINMENT ISOLATION
NON CLASS 1E COMPONENTS: TDRS-G33-1N605 (Recorder)

COMPONENT ID	FAILURE MODE	LOCAL EFFECTS INCLUDING DEPENDENT FAILURES	SYSTEM EFFECTS	SINGLE FAILURE MET	REMARKS
TE-B21-1N010A TE-B21-1N016A	All combinations of thermocouples in left column Fail High	Spurious closing signal to MSIV Isolation Values	**1/2 MISV Closure Signal**	YES	Fails in safe direction
TE-G33-1N022A TE-G33-1N022C TE-G33-1N022E TE-G33-1N023A TE-G33-1N023C TE-G33-1N023E	All combinations of thermocouples in left column Fail High	Spurious closing signal to RWCU Isolation Values	**RWCU Valve HV-G33-1F001 Closes**	YES	Fails in safe direction
TE-E11-1N029A TE-E11-1N029C TE-E11-1N030A TE-E11-1N030C	All combinations of thermocouples in left column Fail High	Spurious closing signal to RHR Isolation Values	**Close RHR Valves HV-E11-1F022, HV-E11-1F009**	YES	Fails in safe direction
TE-E41-1N028A TE-E41-1N029A TE-E51-1N026C TE-E51-1N027C	All combinations of thermocouples in left column Fail High	Spurious closing signal to HPCI Isolation Values	**Close HPCI Valves HV-E41-1F002 HV-E41-1F100 HV-E41-1F059**	YES	Div I and Div II ADS available
TE-E51-1N021A TE-E51-1N022A TE-E51-1N026A TE-E51-1N027A	All combinations of thermocouples in left column Fail High	Spurious closing signal to RCIC Isolation Values	**Closes RCIC Valve HV-E51-1F008**	YES	Fails in safe direction

R1

SAFETY FUNCTION: STEAM LEAK - PRIMARY CONTAINMENT ISOLATION
NON CLASS 1E COMPONENTS: TDRS-G33-1N605 (Recorder)

COMPONENT ID	FAILURE MODE	LOCAL EFFECTS INCLUDING DEPENDENT FAILURES	SYSTEM EFFECTS	SINGLE FAILURE MET	REMARKS	
CABLES in Ch A & Div I Raceways with cables to Non Class 1E Components	Open Thermocouples cables & all cables in raceways	No initiating signal to Steam Leak isolation logic Hi Temp	None	YES	Division II Steam Leak isolation logic for High Temp available	
		Loss of Temp Recorder Reading; No Alarm	None	YES	Recorder/Alarm not required for DBA or for EOPs	R1
		Loss of Divison I	None	YES	Division II available No Div II, Div II Aff or GE Div II/Non Sep associated cables in raceways	
		Loss of Channel A	None	YES	Channel B, C, D available. No Ch B, C, D, or Ch B,C,D Aff, GE Ch B,C,D/Non Sep associated cables in raceways	
	Short Thermocouples cables & all cables in raceways	No initiating signal to Steam Leak isolation logic Hi Temp	None	YES	Division II Steam Leak isolation logic for High Temp available	
		Loss of Temp Recorder Reading; No Alarm	None	YES	Recorder/Alarm not required for DBA or for EOPs	R1

SAFETY FUNCTION: STEAM LEAK - PRIMARY CONTAINMENT ISOLATION
NON CLASS 1E COMPONENTS: TDRS-G33-1N605 (Recorder)

COMPONENT ID	FAILURE MODE	LOCAL EFFECTS INCLUDING DEPENDENT FAILURES	SYSTEM EFFECTS	SINGLE FAILURE MET	REMARKS
CABLES in Ch A & Div I Raceways with cables to Non Class 1E Components	Short Thermocouples cables & all cables in raceways	Loss of Division I	None	YES	Division II available No Div II, Div II Aff or GE Div II/Non Sep associated cables in raceways
		Loss of Channel A	None	YES	Channel B, C, D available. No Ch B,C, D, or Ch B,C,D Aff, GE Ch B,C,D/Non Sep associated cables in raceways
CABLES in Ch A & Div I Raceways with cables to Non Class 1E Components	Impressed voltage on Thermocouples cables & all cables in raceways	No initiating signal to Steam Leak isolation logic Hi Temp (Voltage causes loss of Instrument)	None - Only Ch A, Ch A Aff, Div I & Div I Aff cables in raceway.	YES	Division II Steam Leak isolation logic for High Temp available
		Incorrect or Loss of temp recorder reading; Incorrect or No Alarm	None	YES	Recorder/Alarm not required for DBA or for EOPs

R1

SAFETY FUNCTION: STEAM LEAK - PRIMARY CONTAINMENT ISOLATION
NON CLASS 1E COMPONENTS: TDRS-G33-1N605 (Recorder)

COMPONENT ID	FAILURE MODE	LOCAL EFFECTS INCLUDING DEPENDENT FAILURES	SYSTEM EFFECTS	SINGLE FAILURE MET	REMARKS
CABLES in Ch A & Div I Raceways with cables to Non Class 1E Components	Impressed voltage on Thermocouples cables & all cables in raceways	Spurious closing of Isolation Values (Voltages causes Hi signal)	**Close HPCI Valves HV-E41-1F002 HV-E41-1F100 HV-E41-1F059**	YES	Div II ADS available
			Close RHR Valves HV-E11-1F022, HV-E11-1F009	YES	Fails in safe direction
			Closes RWCU Valve HV-G33-1F001	YES	Fails in safe direction
			1/2 MISV Closure Signal	YES	Fails in safe direction
		Loss of Division I	None	YES	Division II available No Div II, Div II Aff or GE Div II/Non Sep associated cables in raceways
		Loss of Channel A	None	YES	Channel B, C, D available. No Ch B,C, D, or Ch B,C,D Aff, GE Ch B,C,D/Non Sep associated cables in raceways

R1

SAFETY FUNCTION: STEAM LEAK - PRIMARY CONTAINMENT ISOLATION
NON CLASS 1E COMPONENTS: TDRS-G33-1N605 (Recorder)

COMPONENT ID	FAILURE MODE	LOCAL EFFECTS INCLUDING DEPENDENT FAILURES	SYSTEM EFFECTS	SINGLE FAILURE MET	REMARKS	
CABLES in Ch C Raceways with cables to Non Class 1E Components	Open Thermocouples cables & all cables in raceways	No initiating signal to Steam Leak isolation logic Hi Temp	None	YES	Division II Steam Leak isolation logic for High Temp available	
		Loss of Temp Recorder Reading; No Alarm	None	YES	Recorder/Alarm not required for DBA or for EOPs	R1
		Loss of Channel C	None	YES	Channel A, B, D available. No Ch A,B, D, or Ch A,B,D Aff, GE Ch A,B,D/Non Sep associated cables in raceways	
	Short Thermocouples cables & all cables in raceways	No initiating signal to Steam Leak isolation logic Hi Temp	None	YES	Division II Steam Leak isolation logic for High Temp available	
		Loss of Temp Recorder Reading; No Alarm	None	YES	Recorder/Alarm not required for DBA or for EOPs	R1
		Loss of Channel C	None	YES	Channel A, B, D available. No Ch A,B, D, or Ch A,B,D Aff, GE Ch A,B,D/Non Sep associated cables in raceways	

SAFETY FUNCTION: STEAM LEAK - PRIMARY CONTAINMENT ISOLATION
NON CLASS 1E COMPONENTS: TDRS-G33-1N605 (Recorder)

COMPONENT ID	FAILURE MODE	LOCAL EFFECTS INCLUDING DEPENDENT FAILURES	SYSTEM EFFECTS	SINGLE FAILURE MET	REMARKS	
CABLES in Ch C Raceways with cables to Non Class 1E Components	Impressed voltage on Thermocouples cables & all cables in raceways	No initiating signal to Steam Leak isolation logic Hi Temp (Voltage causes loss of Instrument)	None - Only Ch C & Ch C Aff cables in raceway.	YES	Division II Steam Leak isolation logic for High Temp available	
		Spurious closing of Isolation Values (Voltages causes Hi signal)	**Closes RCIC Valve HV-E51-1F008**	YES	Fails in safe direction	R1
		Incorrect or Loss of temp recorder reading; Incorrect or No Alarm	None	YES	Recorder/Alarm not required for DBA or for EOPs	R1
		Loss of Channel C	None	YES	Channel A, B, D available. No Ch A,B, D, or Ch A,B,D Aff, GE Ch A,B,D/Non Sep associated cables in raceways	

References:

J-444 SH 5	J-456 SH 1	J-444 SH 1
J-441 SH 5	J-450 SH4	M-144 SH 1
J-451 SH 20	J-450 SH 2	

CATEGORY 1

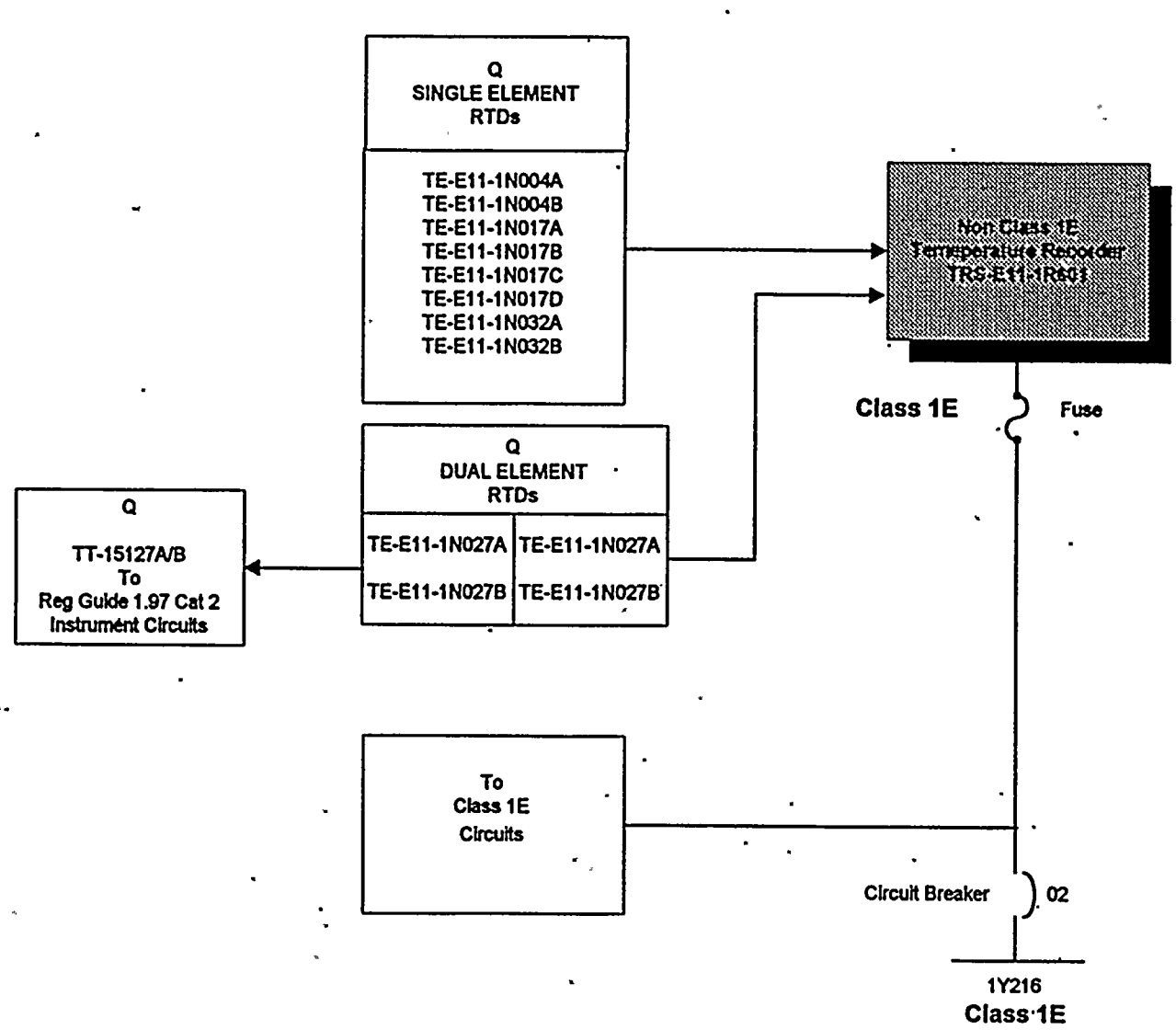

GE1CAT12.VSD

R1

SAFETY FUNCTION: Maintain Piping Integrity, Maintain Class 1E Power Supply 1Y216
NON CLASS 1E COMPONENT(S): TRS-E11-1R601

COMPONENT ID	FAILURE MODE	LOCAL EFFECTS INCLUDING DEPENDENT FAILURES	SYSTEM EFFECTS	SINGLE FAILURE MET	REMARKS	
TE-E11-1N004A TE-E11-1N004B TE-E11-1N017A TE-E11-1N017B	All combinations of RTDs in left column Fail Low or As Is	Incorrect or No Temp Recorder Reading; Incorrect or No Alarm	None	Yes	Recorder/Alarm not required for DBA or for EOPs	R1
TE-E11-1N017C TE-E11-1N017D TE-E11-1N027A* TE-E11-1N027B*		*Incorrect or Loss of TI-E11-15127A/B Indication	None	Yes	Reg Guide 1.97 Cat 2 instruments do not require redundancy	
TE-E11-1N032A TE-E11-1N032B (RTDs) (Q)	All combinations of RTDs in left column Fail High	Incorrect Temp Recorder Recorder Reading; Incorrect or No Alarm	None	Yes	Recorder/Alarm not required for DBA or for EOPs	
		*Incorrect or Loss of TI-E11-15127A/B Indication	None	Yes	Reg Guide 1.97 Cat 2 instruments do not require redundancy	
TRS-E11-1R601 Temperature Recorder (Non Class 1E)	Short Recorder	Loss of Power to TRS-E11-1R601 results in loss of temp recorder reading; No Alarm	None	Yes	Recorder/Alarm not required for DBA or for EOPs Fuse opens at recorder before Class 1E Circuit Breaker opens. No Class 1E circuits connected to fuse (FSAR 8.1.6.1q5 Isolation Method iii)	R1
		Loss of Temp Recorder Reading; No Alarm	None	Yes	Recorder/Alarm not required for DBA or for EOPs	R1

SAFETY FUNCTION: Maintain Piping Integrity, Maintain Class 1E Power Supply 1Y216
NON CLASS 1E COMPONENT(S): TRS-E11-1R601

COMPONENT ID	FAILURE MODE	LOCAL EFFECTS INCLUDING DEPENDENT FAILURES	SYSTEM EFFECTS	SINGLE FAILURE MET	REMARKS	
TRS-E11-1R601 Temperature Recorder (Non Class 1E)	Open Recorder	Loss of Temp Recorder Reading; No Alarm	None	Yes	Recorder/Alarm not required for DBA or for EOPs	R1
CABLES in same raceways as cables to Non Class 1E Component	Open RTD cables	Loss of Temp Recorder Reading; No Alarm	None	Yes	Recorder/Alarm not required for DBA or for EOPs Pipe Integrity Main. (See Appenkix K)	R1
	Open cables to transducers classified as Q	Loss of:				
		Computer Inputs	None	Yes	Computer not required for DBA or for EOPs	R1
		XI-00018A XI-00019A XI-00020A XI-00021A XI-00022A XI-00023A XI-00024A XI-00025A XI-00027A XI-00028A XI-00029A XI-00032A XI-00032B XI-00032C XI-00032D	None	Yes	These are Non Class 1E meters used for Reg Guide 1.97 Cat. 2 Reg Guide 1.97 Cat 2 instruments do not require redundancy	

SAFETY FUNCTION: Maintain Piping Integrity, Maintain Class 1E Power Supply 1Y216
NON CLASS 1E COMPONENT(S): TRS-E11-1R601

COMPONENT ID	FAILURE MODE	LOCAL EFFECTS INCLUDING DEPENDENT FAILURES	SYSTEM EFFECTS	SINGLE FAILURE MET	REMARKS	
CABLES in same raceways as cables to Non Class 1E Component	Open cables to Pressure boundary instruments classified as Q	Loss of Non Class 1E Instrument Loops.	None	Yes	Non Class 1E Loops not required for DBA Pressure Boundary maintained (See Appendix K)	
	Open cables to Hydrogen Recombiners Thermocouples	Loss of Hydrogen Recombiner Temperature Indication	None	Yes	Indication not required for DBA or for EOPs Provides Indication Only (See Appendix K)	R1
CABLES in same raceways as cables to Non Class 1E Component	Short RTD cables	Loss of Temp Recorder Reading; No Alarm	None	Yes	Recorder/Alarm not required for DBA or for EOPs Pipe Integrity Main. (See Appendix K)	R1
	Short cables to transducers classified as Q	Loss of: Computer Inputs	None	Yes	Computer not required for DBA or for EOPs	RJ

SAFETY FUNCTION: Maintain Piping Integrity, Maintain Class 1E Power Supply 1Y216
NON CLASS 1E COMPONENT(S): TRS-E11-1R601

COMPONENT ID	FAILURE MODE	LOCAL EFFECTS INCLUDING DEPENDENT FAILURES	SYSTEM EFFECTS	SINGLE FAILURE MET	REMARKS
CABLES in same raceways as cables to Non Class 1E Component	Short cables to transducers classified as Q	Loss of: XI-00018A XI-00019A XI-00020A XI-00021A XI-00022A XI-00023A XI-00024A XI-00025A XI-00027A XI-00028A XI-00029A XI-00032A XI-00032B XI-00032C XI-00032D	None	Yes	These are Non Class 1E meters used for Reg Guide 1.97 Cat. 2 Reg Guide 1.97 Cat 2 instruments do not require redundancy
	Short cables to Pressure boundary instruments classified as Q	Loss of Non Class 1E Instrument Loops.	None	Yes	Non Class 1E Loops not required for DBA or for EOPs Pressure Boundary maintained (See Appendix K)
	Short cables to Hydrogen Recombiners Thermocouples	Loss of Hydrogen Recombiner Temperature Indication	None	Yes	Indication not required for DBA or for EOPs Provides Indication Only (See Appendix K)

R1

R1

SAFETY FUNCTION: Maintain Piping Integrity, Maintain Class 1E Power Supply 1Y216
NON CLASS 1E COMPONENT(S): TRS-E11-1R601

COMPONENT ID	FAILURE MODE	LOCAL EFFECTS INCLUDING DEPENDENT FAILURES	SYSTEM EFFECTS	SINGLE FAILURE MET	REMARKS	
CABLES in same raceways as cables to Non Class 1E Component	Impressed Voltage Fault on RTD cables	Loss of Temp Recorder Reading; No Alarm	None	YES	Recorder/Alarm not required for DBA or for EOPs. Impressed voltage does not propagate to RTD other elemnt. Piping intergrity maintained (See App K)	R1
	Impressed voltage Fault on cables to transducers classified as Q	Incorrect/Loss of indication: Computer Inputs	None	YES	Computer not required for DBA or for EOPs Impressed voltage does not propagate to input of transducers (See Appendix K)	R1
		XI-00018A XI-00019A XI-00020A XI-00021A XI-00022A XI-00023A XI-00024A XI-00025A XI-00027A XI-00028A XI-00029A XI-00032A XI-00032B XI-00032C XI-00032D	None	YES	These are Non Class 1E meters used for Reg Guide 1.97 Cat. 2 Reg Guide 1.97 Cat 2 instruments do not require redundancy	

SAFETY FUNCTION: Maintain Piping Integrity, Maintain Class 1E Power Supply 1Y216
NON CLASS 1E COMPONENT(S): TRS-E11-1R601

COMPONENT ID	FAILURE MODE	LOCAL EFFECTS INCLUDING DEPENDENT FAILURES	SYSTEM EFFECTS	SINGLE FAILURE MET	REMARKS	
CABLES in same raceways as cables to Non Class 1E Component	Impressed voltage fault on cables to Pressure Boundary instruments classified as Q	Loss of Non Class 1E Instrument Loops	None	YES	Non Class 1E Loops not required for DBA or for EOPs. Pressure Boundary maintained (See Appendix K)	R1
	Impressed voltage fault on cables to Hydrogen Recombiners Thermocouples	Loss of HydrogenRecombiner Temperature Indication	None	Yes	Indication not required for DBA or for EOPs Provides Indication Only (See Appendix K)	R1

Referrences:

J-451 Sh 17	IOM 52	EC-017-1014
SEA-EE-181	J-451 Sh 5	
SEA-EE-221	J-451 Sh 16	

CATEGORY 1

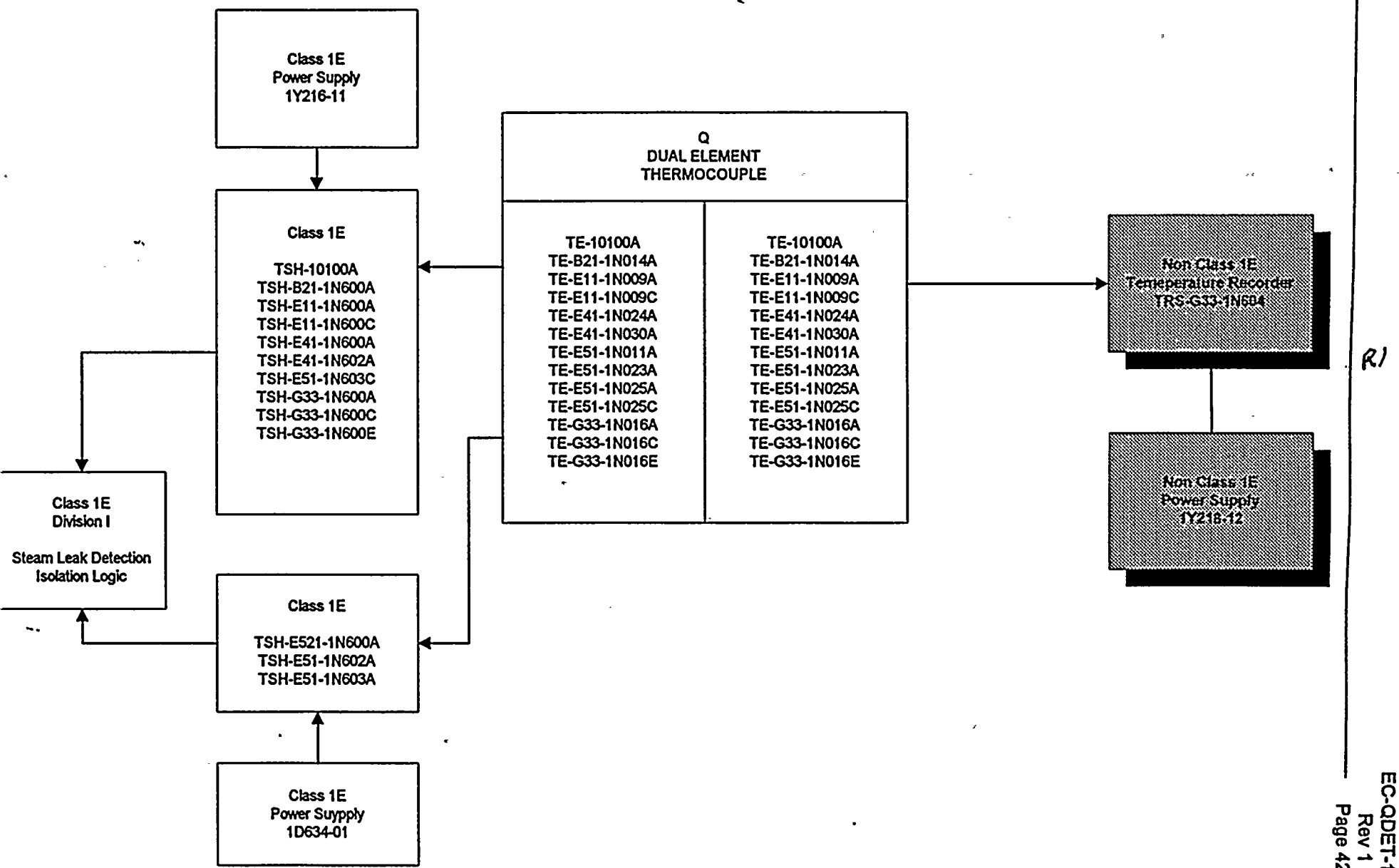

R1

GE1CAT13.VSD

SAFETY FUNCTION: STEAM LEAK - PRIMARY CONTAINMENT ISOLATION
NON CLASS 1E COMPONENTS: TRS-G33-1N604 (Recorder)

COMPONENT ID	FAILURE MODE	LOCAL EFFECTS INCLUDING DEPENDENT FAILURES	SYSTEM EFFECTS	SINGLE FAILURE MET	REMARKS	
TE-E41-1N030A TE-10100A TE-E11-1N009A TE-E11-1N009C	All combinations of thermocouples in left column Fail Low or As Is	No initiating signal to Steam Leak isolation logic Hi Temp	None	YES	Division II Steam Leak isolation logic for High Temp available	
TE-B21-1N014A TE-E51-1N025C TE-E51-1N025A TE-E51-1N011A TE-G33-1N016A TE-G33-1N016C TE-E51-1N023A TE-G33-1N016E TE-E41-1N024A (Thermocouples Dual Elements) (Class 1E/ Non Class 1E Interface)		Incorrect Temp Recorder Reading: No Alarm	None	YES	Recorder/Alarm not required for DBA or for EOPs.	R1
TRS-G33-1N605 Temperature Recorder (Non Class 1E)	Open Recorder	Loss of Temp Recorder Reading; No Alarm	None	YES	Recorder/Alarm not required for DBA or for EOPs	R1
	Short Recorder	Loss of Temp Recorder Reading; No Alarm	None	YES	Recorder/Alarm not required for DBA or for EOPs	R1

SAFETY FUNCTION: STEAM LEAK - PRIMARY CONTAINMENT ISOLATION
NON CLASS 1E COMPONENTS: TRS-G33-1N604 (Recorder)

COMPONENT ID	FAILURE MODE	LOCAL EFFECTS INCLUDING DEPENDENT FAILURES	SYSTEM EFFECTS	SINGLE FAILURE MET	REMARKS
TE-B21-1N014A TE-10100A	All combinations of thermocouples in left column Fail High	Spurious closing signal to MSIV Isolation Values	**1/2 MISV Closure Signal**	YES	Fails in safe direction
		Loss of Temp Recorder Reading; No Alarm	None	YES	Recorder/Alarm not required for DBA or for EOPs
TE-G33-1N016A TE-G33-1N016C TE-G33-1N016E	All combinations of thermocouples in left column Fail High	Spurious closing signal to RWCU Isolation Values	**RWCU Valve HV-G33-1F001 Closes**	YES	Fails in safe direction
		Loss of Temp Recorder Reading; No Alarm	None	YES	Recorder/Alarm not required for DBA or for EOPs
TE-E11-1N009A TE-E11-1N009C	All combinations of thermocouples in left column Fail High	Spurious closing signal to RHR Isolation Values	**Close RHR Valves HV-E11-1F022, HV-E11-1F009**	YES	Fails in safe direction
		Loss of Temp Recorder Reading; No Alarm	None	YES	Recorder/Alarm not required for DBA or for EOPs
TE-E41-1N024A TE-E41-1N030A TE-E51-1N025C	All combinations of thermocouples in left column Fail High	Spurious closing signal to HPCI Isolation Values	**Close HPCI Valves HV-E41-1F002 HV-E41-1F100 HV-E41-1F059**	YES	Div I and Div II ADS available
		Loss of Temp Recorder Reading; No Alarm	None.	YES	Recorder/Alarm not required for DBA or for EOPs
TE-E51-1N011A TE-E51-1N023A TE-E51-1N025A	All combinations of thermocouples in left column Fail High	Spurious closing signal to RCIC Isolation Values	**Closes RCIC Valve HV-E51-1F008**	YES	Fails in safe direction
		Loss of Temp Recorder Reading; No Alarm	None	YES	Recorder/Alarm not required for DBA or for EOPs

R1

SAFETY FUNCTION: STEAM LEAK - PRIMARY CONTAINMENT ISOLATION
NON CLASS 1E COMPONENTS: TRS-G33-1N604 (Recorder)

COMPONENT ID	FAILURE MODE	LOCAL EFFECTS INCLUDING DEPENDENT FAILURES	SYSTEM EFFECTS	SINGLE FAILURE MET	REMARKS	
CABLES in Ch A & Div I Raceways with cables to Non Class 1E Components	Open Thermocouple cables & all cables in raceways	No initiating signal to Steam Leak isolation logic Hi Temp	None	YES	Division II Steam Leak isolation logic for High Temp available	
		Loss of Temp Recorder Reading; No Alarm	None	YES	Recorder/Alarm not required for DBA or for EOPs	R1
		Loss of Division I	None	YES	Division II available No Div II, Div II Aff or GE Div II/Non Sep associated cables in raceways	
		Loss of Channel A	None	YES	Channel B, C, D available. No Ch B, C, D, or Ch B,C,D Aff, GE Ch B,C,D/Non Sep associated cables in raceways	
	Short Thermocouple cables & all cables in raceways	No initiating signal to Steam Leak isolation logic Hi Temp	None	YES	Division II Steam Leak isolation logic for High Temp available	
		Loss of Temp Recorder Reading; No Alarm	None	YES	Recorder/Alarm not required for DBA or for EOPs	R1

SAFETY FUNCTION: STEAM LEAK - PRIMARY CONTAINMENT ISOLATION
NON CLASS 1E COMPONENTS: TRS-G33-1N604 (Recorder)

COMPONENT ID	FAILURE MODE	LOCAL EFFECTS INCLUDING DEPENDENT FAILURES	SYSTEM EFFECTS	SINGLE FAILURE MET	REMARKS
CABLES in Ch A & Div I Raceways with cables to Non Class 1E Components	Short Thermocouple cables & all cables in raceways	Loss of Division I	None	YES	Division II available No Div II, Div II Aff or GE Div II/Non Sep associated cables in raceways
		Loss of Channel A	None	YES	Channel B, C, D available. No Ch B, C, D, or Ch B,C,D Aff, GE Ch B,C,D/Non Sep associated cables in raceways

SAFETY FUNCTION: STEAM LEAK - PRIMARY CONTAINMENT ISOLATION
NON CLASS 1E COMPONENTS: TRS-G33-1N604 (Recorder)

COMPONENT ID	FAILURE MODE	LOCAL EFFECTS INCLUDING DEPENDENT FAILURES	SYSTEM EFFECTS	SINGLE FAILURE MET	REMARKS
CABLES in Ch A & Div I Raceways with cables to Non Class 1E Components	Impressed Voltage on Thermocouple cables & all cables in raceways	No initiating signal to Steam Leak isolation logic Hi Temp (Voltage causes loss of Instrument)	None - Only Ch A, Ch A Aff, DivI & Div I Aff cables in raceways	YES	Division II Steam Leak isolation logic for High Temp available
		Spurious closing of Isolation Values (Voltages causes Hi signal)	**1/2 MISV Closure Signal**	YES	Fails in safe direction
			RWCU Valve HV-G33-1F001 Closes	YES	Fails in safe direction
			Close RHR Valves HV-E11-1F022, HV-E11-1F009	YES	Fails in safe direction
			Close HPCI Valves HV-E41-1F002 HV-E41-1F100 HV-E41-1F059	YES	Div II ADS available

R1

SAFETY FUNCTION: STEAM LEAK - PRIMARY CONTAINMENT ISOLATION
NON CLASS 1E COMPONENTS: TRS-G33-1N604 (Recorder)

COMPONENT ID	FAILURE MODE	LOCAL EFFECTS INCLUDING DEPENDENT FAILURES	SYSTEM EFFECTS	SINGLE FAILURE MET	REMARKS
CABLES in Ch A & Div I Raceways with cables to Non Class 1E Components	Impressed Voltage on Thermocouple cables & all cables in raceways	Incorrect or Loss of temp recorder reading; Incorrect or No Alarm	None	YES	Recorder/Alarm not required for DBA or for EOPs
		Loss of Division I	None	YES	Division II available No Div II, Div II Aff or GE Div II/Non Sep associated cables in raceways
		Loss of Channel A	None	YES	Channel B, C, D available. No Ch B, C, D, or Ch B,C,D Aff, GE Ch B,C,D/Non Sep associated cables in raceways

R1

SAFETY FUNCTION: STEAM LEAK - PRIMARY CONTAINMENT ISOLATION
NON CLASS 1E COMPONENTS: TRS-G33-1N604 (Recorder)

COMPONENT ID	FAILURE MODE	LOCAL EFFECTS INCLUDING DEPENDENT FAILURES	SYSTEM EFFECTS	SINGLE FAILURE MET	REMARKS	
CABLES in Ch C Raceways with cables to Non Class 1E Components	Open Thermocouple cables & all cables in raceways	No initiating signal to Steam Leak isolation logic Hi Temp	None	YES	Division II Steam Leak isolation logic for High Temp available	
		Loss of Temp Recorder Reading; No Alarm	None	YES	Recorder/Alarm not required for DBA or for EOPs	R1
		Loss of Channel C	None	YES	Channel A, B, D available. No Ch A,B, D, or Ch A,B,D Aff, GE Ch A,B,D/Non Sep associated cables in raceways	
	Short Thermocouple cables & all cable in raceways	No initiating signal to Steam Leak isolation logic Hi Temp	None	YES	Division II Steam Leak isolation logic for High Temp available	
		Loss of Temp Recorder Reading; No Alarm	None	YES	Recorder/Alarm not required for DBA or for EOPs	R1
		Loss of Channel C	None	YES	Channel A, B, D available. No Ch A,B, D, or Ch A,B,D Aff, GE Ch A,B,D/Non Sep associated cables in raceways	

SAFETY FUNCTION: STEAM LEAK - PRIMARY CONTAINMENT ISOLATION
NON CLASS 1E COMPONENTS: TRS-G33-1N604 (Recorder)

COMPONENT ID	FAILURE MODE	LOCAL EFFECTS INCLUDING DEPENDENT FAILURES	SYSTEM EFFECTS	SINGLE FAILURE MET	REMARKS	
CABLES in Ch C Raceways with cables to Non Class 1E Components	Impressed Voltage on Thermocouple cables & all cables in raceways	No initiating signal to Steam Leak isolation logic Hi Temp (Voltage causes loss of Instrument)	None - Only Ch C & Ch C Aff cables in raceway.	YES	Division II Steam Leak isolation logic for High Temp available	
		Spurious closing of Isolation Values (Voltages causes Hi signal)	Closes RCIC Valve HV-E51-1F008	YES	Fails in safe direction	R1
		Incorrect or Loss of temp recorder reading; Incorrect or No Alarm	None	YES	Recorder/Alarm not required for DBA or for EOPs	R1
		Loss of Channel C	None	YES	Channel A, B, D available. No Ch A,B, D, or Ch A,B,D Aff, GE Ch A,B,D/Non Sep associated cables in raceways	

References:

J-444 SH 4	J-451 SH 20	J-450 SH 2	J-441 SH 6
J-441 SH 5	J-456 SH 1	J-444 SH 1	M-144 SH 1
J-401 SH12	J-450 SH.4	J-444 SH 2	

APPENDIX B

SINGLE FAILURE ANALYSIS FOR CATEGORY 2 GE SUPPLIED NON CLASS 1E INSTRUMENTS CONNECTED TO Q CLASSIFIED INSTRUMENTS

CATEGORY 2

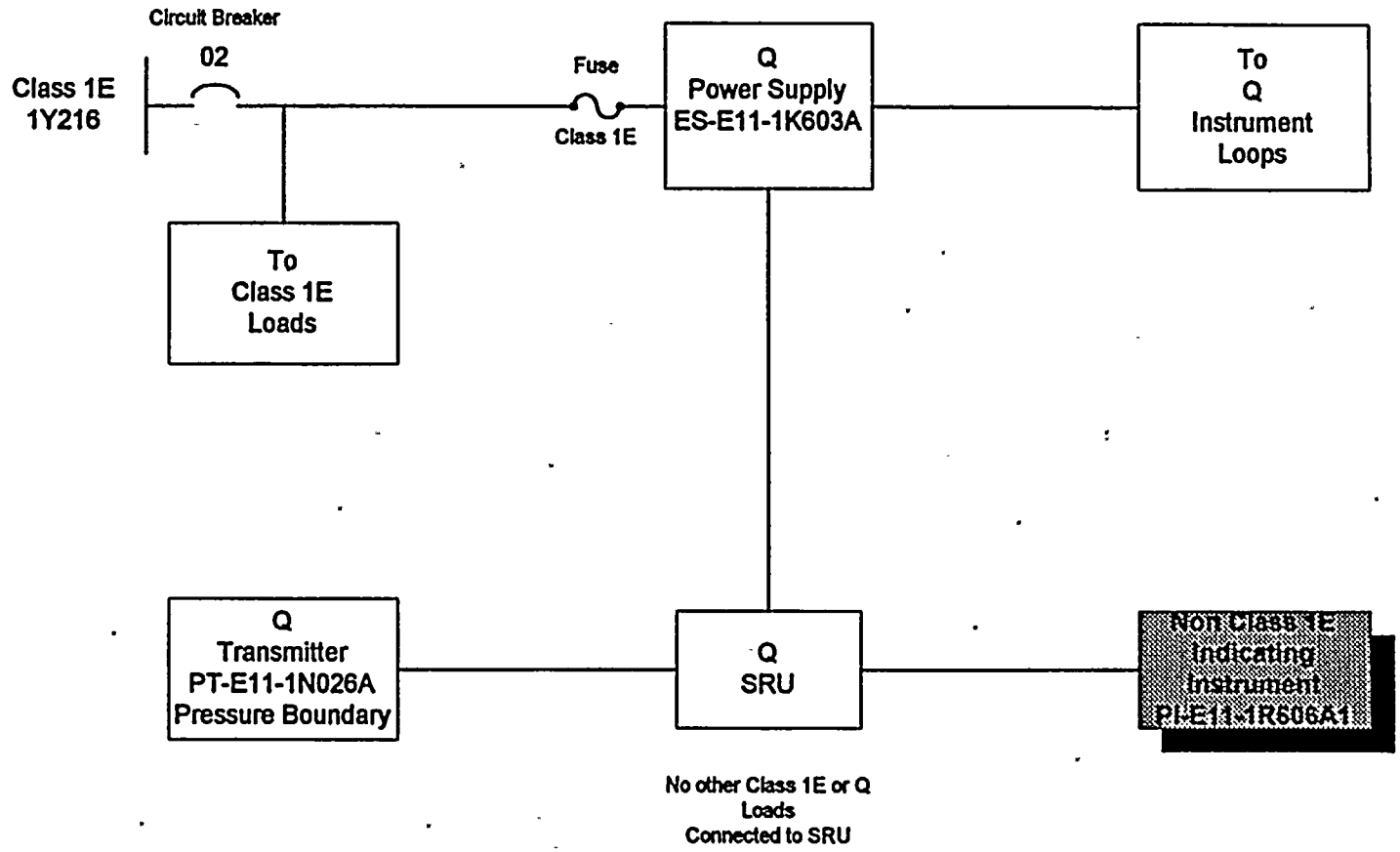

R1

GE1CAT21.VSD

SAFETY FUNCTION: RHR HX A Inlet Pressure Boundary (PT-E11-1N026A), Maintain Class 1E Power Supply 1Y216
NON CLASS 1E COMPONENT(S); PI-E11-1R606A1

COMPONENT ID	FAILURE MODE	LOCAL EFFECTS INCLUDING DEPENDENT FAILURES	SYSTEM EFFECTS	SINGLE FAILURE MET	REMARKS	
PI-E11-1R606A1 Indicating Meter (Non Class 1E)	Open Indicator	Loss of Pressure Indication (PI-E11-1R606A1)	None	YES	Indicator not required for DBA or for EOPs Provides Indication Only	R1
	Short Indicator	Loss of Pressure Indication (PI-E11-1R606A1)	None	YES	Indicator not required for DBA or for EOPs Provides Indication Only	R1
CABLES in same raceways as cable to Non Class 1E Component	Open cables (All Cables)	Loss of Pressure Indication (PI-E11-1R606A1)	None	YES	Indicator not required for DBA or for EOPs Provides Indication Only	R1
		Loss of of Division I	None	YES	Division II available No Div II, Div II Aff or GE Div II/Non Sep associated cables in raceways	
		Loss of Channel A	None	YES	Channel B, C, D available. No Ch B,C, D or Ch B,C,D Aff, GE Ch B,C,D/Non Sep associated cables in raceways	

SAFETY FUNCTION: RHR HX A Inlet Pressure Boundary (PT-E11-1N026A), Maintain Class 1E Power Supply 1Y216
NON CLASS 1E COMPONENT(S); PI-E11-1R606A1

COMPONENT ID	FAILURE MODE	LOCAL EFFECTS INCLUDING DEPENDENT FAILURES	SYSTEM EFFECTS	SINGLE FAILURE MET	REMARKS
CABLES in same raceways as cable to Non Class 1E Component	Short cables (All Cables)	Loss of Pressure Indication (PI-E11-1R606A1)	None	YES	Indicator not required for DBA or for EOPs Provides Indication Only
		Loss of Division I	None	YES	DivisionI II available No Div II, Div II Aff or GE Div II/Non Sep associated cables in raceways
		Loss of Channel A	None	YES	Channel B, C, D available. No Ch B,C, D or Ch B,C,D Aff, GE Ch B,C,D/Non Sep associated cables in raceways

R1

SAFETY FUNCTION: RHR HX A Inlet Pressure Boundary (PT-E11-1N026A), Maintain Class 1E Power Supply 1Y216
NON CLASS 1E COMPONENT(S); PI-E11-1R606A1

COMPONENT ID	FAILURE MODE	LOCAL EFFECTS INCLUDING DEPENDENT FAILURES	SYSTEM EFFECTS	SINGLE FAILURE MET	REMARKS
CABLES in same raceways as cable to Non Class 1E Component	Impressed Voltage (All cables)	Loss of Pressure Indication (PI-E11-1R606A1)	None	YES	Indicator not required for DBA or for EOPs Provides Indication Only
		Loss of Division I	None	YES	Division II available No Div II, Div II Aff or GE Div II/Non Sep associated cables in raceways
		Loss of Channel A	None	YES	Channel B, C, D available. No Ch B,C, D or Ch B,C,D Aff, GE Ch B,C,D/Non Sep associated cables in raceways
		Loss of PT-E11-1N026A Electronics	None	YES	Pressure Boundary Maintained
		Loss of electronics to other Pressure Boundary Instruments with cables in contact with EM1PM1302	None	YES	Pressure Boundary Maintained

R1

SAFETY FUNCTION: RHR HX A Inlet Pressure Boundary (PT-E11-1N026A), Maintain Class 1E Power Supply 1Y216
NON CLASS 1E COMPONENT(S); PI-E11-1R606A1

COMPONENT ID	FAILURE MODE	LOCAL EFFECTS INCLUDING DEPENDENT FAILURES	SYSTEM EFFECTS	SINGLE FAILURE MET	REMARKS
CABLES in same raceways as cable to Non Class 1E Component	Impressed Voltage (All cables)	Loss of Power Supply ES-E11-1K603A Loads:	None	YES	Fuse opens at Power Supply before Class 1E Circuit Breaker opens. No Class 1E circuits connected to fuse (FSAR 8.1.6.1q5 Isolation Method iii)
		FI-E11-1R603A - Loss of LOOP A Flow Indication		YES	FI-E11-1R603A is Reg Guide 1.97 Cat 2 which does not require redundancy
		FR-E11-1R608 - Loss of LOOP A Flow Indication		YES	Recorder not required for DBA or for EOPs Provides Indication Only R1
		FI-E11-1R602A - Loss of RHR SW Flow to Hx 1A Indication		YES	Indication not required for DBA or for EOPs Provides Indication Only R1

References:

J-451 Sh 9	M-151 Sh 1
J-451 Sh 12	M1-E11-66(14)
J-412 Sh 13	EC-017-1014

CATEGORY 2

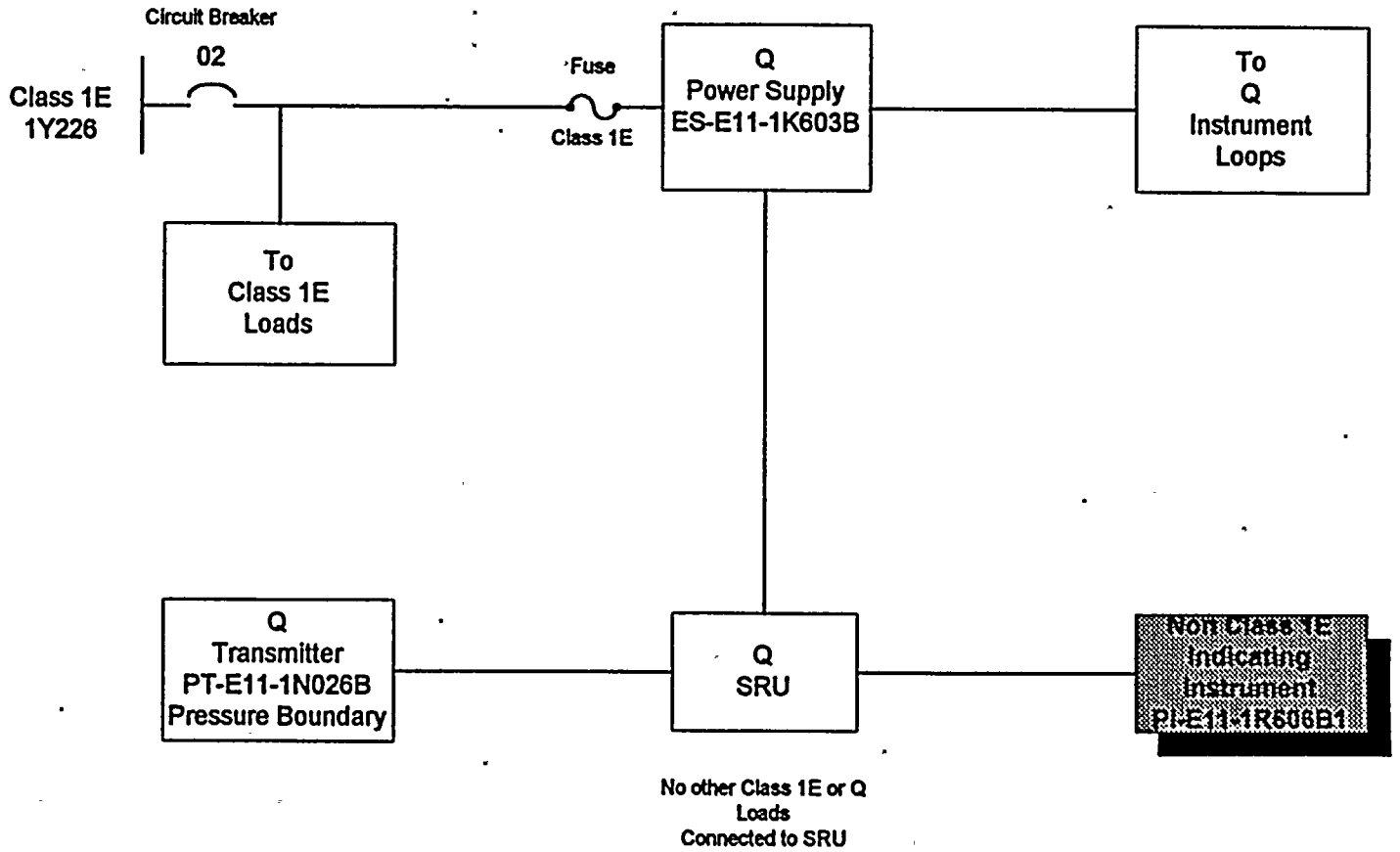

R1

GE1CAT22.VSD

SAFETY FUNCTION: RHR HX B Inlet Pressure Boundary (PT-E11-1N026B), Maintain Class 1E Power Supply 1Y226
NON CLASS 1E COMPONENT(S); PI-E11-1R606B1

COMPONENT ID	FAILURE MODE	LOCAL EFFECTS INCLUDING DEPENDENT FAILURES	SYSTEM EFFECTS	SINGLE FAILURE MET	REMARKS	
PI-E11-R606B1 Indicating Meter (Non Class 1E)	Open Indicator	Loss of Pressure Indication (PI-E11-1R606B1)	None	YES	Indicator not required for DBA or for EOPs Provides Indication Only	RI
	Shorted Indicator	Loss of Pressure Indication (PI-E11-1R606B1)	None	YES	Indicator not required for DBA or for EOPs Provides Indication Only	RI
CABLES in same raceways as cable to Non Class 1E Component	Open cables (All Cables)	Loss of Pressure Indication (PI-E11-1R606B1)	None	YES	Indicator not required for DBA or for EOPs Provides Indication Only	RI
		Loss of Division II	None	YES	Division I available No Div I, Div I Aff or GE Div I/Non Sep associated cables in raceways	
		Loss of Channel B	None	YES	Channel A, C, D available. No Ch A,C, D or Ch A,C,D Aff, GE Ch A,C,D/Non Sep associated cables in raceways	

SAFETY FUNCTION: RHR HX B Inlet Pressure Boundary (PT-E11-1N026B), Maintain Class 1E Power Supply 1Y226
NON CLASS 1E COMPONENT(S); PI-E11-1R606B1

COMPONENT ID	FAILURE MODE	LOCAL EFFECTS INCLUDING DEPENDENT FAILURES	SYSTEM EFFECTS	SINGLE FAILURE MET	REMARKS
CABLES in same raceways as cable to Non Class 1E Component	Short cables (All Cables)	Loss of Pressure Indication (PI-E11-1R606B1)	None	YES	Indicator not required for DBA or for EOPs Provides Indication Only
		Loss of Division II	None	YES	Division I available No Div I, Div I Aff or GE Div I/Non Sep associated cables in raceways
		Loss of Channel B	None	YES	Channel A, C, D available. No Ch A,C, D or Ch A,C,D Aff, GE Ch A,C,D/Non Sep associated cables in raceways
	Impressed Voltage (All cables)	Loss of Pressure Indication (PI-E11-1R606B1)	None	YES	Indicator not required for DBA or for EOPs Provides Indication Only
		Loss of PT-E11-1N026B Electronics	None	YES	Pressure Boundary Maintained
		Loss of other Pressure Boundaries Electronics	None	YES	Pressure Boundary Maintained
		Loss of Division II	None	YES	Division I available No Div I, Div I Aff or GE Div I/Non Sep associated cables in raceways

R1

RJ

SAFETY FUNCTION: RHR HX B Inlet Pressure Boundary (PT-E11-1N026B), Maintain Class 1E Power Supply 1Y226
NON CLASS 1E COMPONENT(S); PI-E11-1R606B1

COMPONENT ID	FAILURE MODE	LOCAL EFFECTS INCLUDING DEPENDENT FAILURES	SYSTEM EFFECTS	SINGLE FAILURE MET	REMARKS
CABLES in same raceways as cable to Non Class 1E Component	Impressed Voltage (All cables)	Loss of Channel B	None	YES	Channel A, C, D available. No Ch A,C, D or Ch A,C,D Aff, GE Ch A,C,D/Non Sep associated cables in raceways
		Loss of Power Supply ES-E11-1K603B Loads:	None	YES	Fuse opens at Power Supply before Class 1E Circuit Breaker opens. No Class 1E circuits connected to fuse (FSAR 8.1.6.1q5 Isolation Method iii)
		FI-E11-1R603B - Loss of LOOP B Flow Indication		YES	FI-E11-1R603B is Reg Guide 1.97 Cat 2 which does not require redundancy
		FR-E11-1R608 - Loss of LOOP B Flow Indication		YES	Recorder not required for DBA or for EOPs Provides Indication Only R1
REFERENCES: J-451 Sh 11 J-451 Sh 13 M1-E11-66(14)	EC-017-1013				

CATEGORY 2

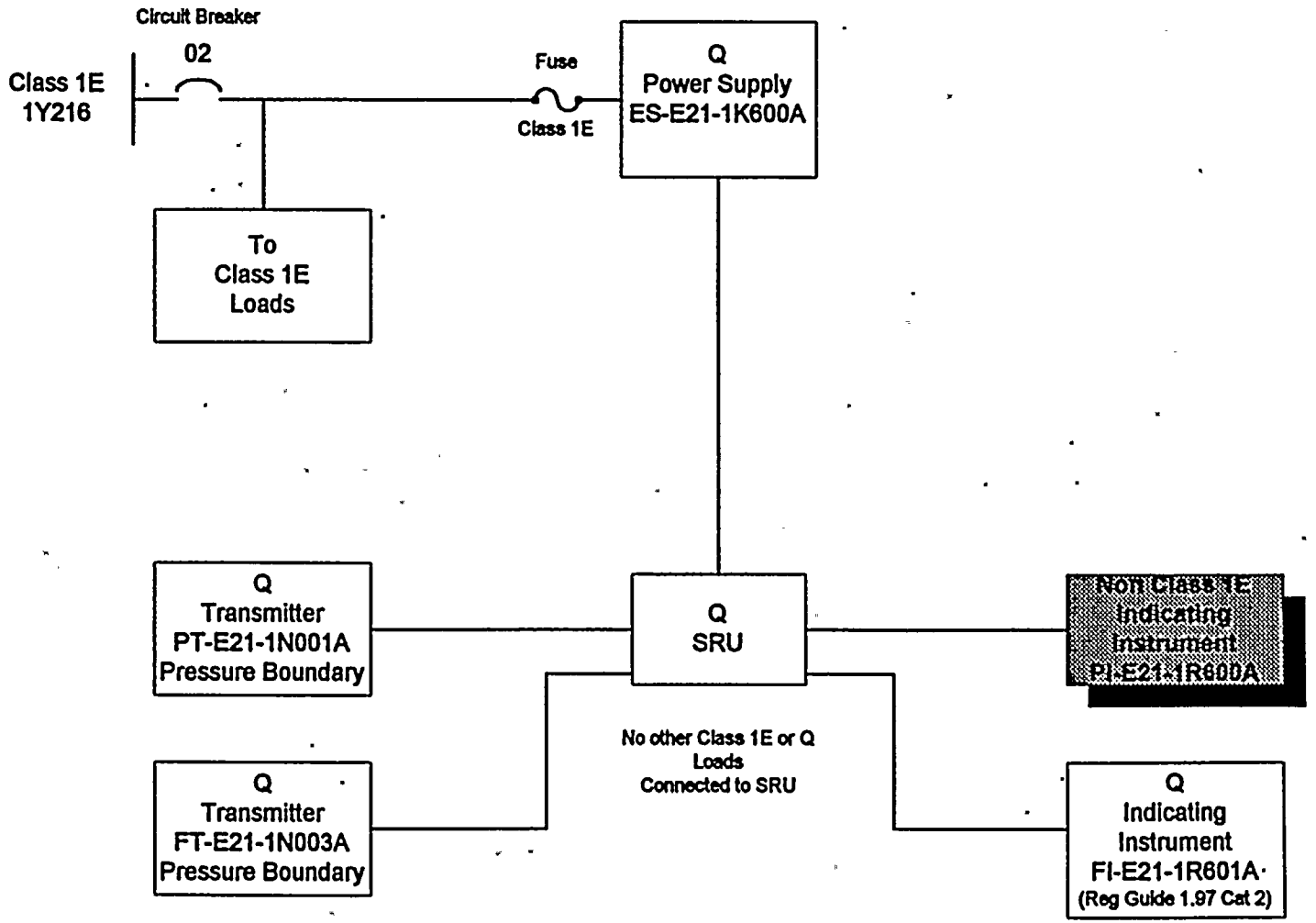

R1

GE1CAT23.VSD

SAFETY FUNCTION: CORE SPRAY Flow Indication Div I (REG GUIDE 1.97, Cat 2), Maintain Class 1E Power Supply 1Y216
NON CLASS 1E COMPONENTS: PI-E21-1R600A

COMPONENT ID	FAILURE MODE	LOCAL EFFECTS INCLUDING DEPENDENT FAILURES	SYSTEM EFFECTS	SINGLE FAILURE MET	REMARKS	
PI-E21-1R600A Indicating Meter (Non Class 1E)	Open Indicator	Loss of Core Spray Pressure Indication (PI-E21-1R600A)	None	YES	Indicator not required for DBA or for EOPs Provides Indication Only	R1
	Shorted Indicator	Loss of Core Spray Pressure Indication (PI-E21-1R600A)	None	YES	Indicator not required for DBA or for EOPs Provides Indication Only	R1
CABLES in same raceways as cable to Non Class 1E Component	Open cables (All Cables)	Loss of Core Spray Pressure Indication (PI-E21-1R600A)	None	YES	Indicator not required for DBA or for EOPs Provides Indication Only	R1
		Loss of Core Spray Flow Indication (FI-E21-1R601A)	None	YES	FI-E21-1R601A is Reg Guide 1.97 Cat 2 which does not require redundancy	
		Loss of Division I	None	YES	Division II available No Div II, Div II Aff or GE Div II/Non Sep associated cables in raceways	
		Loss of Channel A	None	YES	Channel B, C, D available. No Ch B,C, D or Ch B,C,D Aff, GE Ch B,C,D/Non Sep associated cables in raceways	

SAFETY FUNCTION; CORE SPRAY Flow Indication Div I (REG GUIDE 1.97, Cat 2), Maintain Class 1E Power Supply 1Y216
NON CLASS 1E COMPONENTS: PI-E21-1R600A

COMPONENT ID	FAILURE MODE	LOCAL EFFECTS INCLUDING DEPENDENT FAILURES	SYSTEM EFFECTS	SINGLE FAILURE MET	REMARKS
CABLES in same raceways as cable to Non Class 1E Component	Shorted cables (All Cables)	Loss of Core Spray Pressure Indication (PI-E21-1R600A)	None	YES	Indicator not required for DBA or for EOPs Provides Indication Only
		Loss of Core Spray Flow Indication (FI-E21-1R601A)	None	YES	FI-E21-1R601A is Reg Guide 1.97 Cat 2 which does not require redundancy
		Loss of Division I	None	YES	Division II available No Div II, Div II Aff or GE Div II/Non Sep associated cables in raceways
		Loss of Channel A	None	YES	Channel B, C, D available. No Ch B,C, D or Ch B,C,D Aff, GE Ch B,C,D/Non Sep associated cables in raceways
	Impressed Voltage (All Cables)	Loss of Core Spray Pressure Indication (PI-E21-1R600B)	None	YES	Indicator not required for DBA or for EOPs Provides Indication Only
		Incorrect/Loss of Core Spray Flow Indication (FI-E21-1R601A)	None	YES	FI-E21-1R601A is Reg Guide 1.97 Cat 2 which does not require redundancy

R1

R1

SAFETY FUNCTION: CORE SPRAY Flow Indication Div I (REG GUIDE 1.97, Cat 2), Maintain Class 1E Power Supply 1Y216
NON CLASS 1E COMPONENTS: PI-E21-1R600A

COMPONENT ID	FAILURE MODE	LOCAL EFFECTS INCLUDING DEPENDENT FAILURES	SYSTEM EFFECTS	SINGLE FAILURE MET	REMARKS
CABLES in same raceways as cable to Non Class 1E Component	Impressed Voltage (All Cables)	Loss of Power Supply ES-E21-1K600A	None Only PI-E21-600A FI-E21-1R601A supplied from ES-E21-1K600A	YES	Division II available No Div II, Div II Aff or GE Div II/Non Sep associated cables in raceways Fuse opens at Power Supply before Class 1E Circuit Breaker opens. No Class 1E circuits connected to fuse (FSAR 8.1.6.1q5 Isolation Method iii)
		Loss of FT-E21-1N001A Electronics	None	YES	Division II available; Pressure Boundary Maintained
		Loss of PT-E21-1N003A Electronics	None	YES	Division II available; Pressure Boundary Maintained
		Loss of electronics to other Pressure Boundary Instruments with cables in contact with EK1PN1301	None	YES	Pressure Boundary Maintained
		Loss of Division I	None	YES	Division II available No Div II, Div II Aff or GE Div II/Non Sep associated cables in raceways

SAFETY FUNCTION: CORE SPRAY Flow Indication Div I (REG GUIDE 1.97, Cat 2), Maintain Class 1E Power Supply 1Y216
NON CLASS 1E COMPONENTS: PI-E21-1R600A

COMPONENT ID	FAILURE MODE	LOCAL EFFECTS INCLUDING DEPENDENT FAILURES	SYSTEM EFFECTS	SINGLE FAILURE MET	REMARKS
CABLES in same raceways as cable to Non Class 1E Component	Impressed Voltage (All Cables)	Loss of portion of Channel A	None	YES	Channel B, C, D available. No Ch B,C, D or Ch B,C,D Aff, GE Ch B,C,D/Non Sep associated cables in raceways

REFERENCES

J-452 SH 2 M1-E21-35 (2)

CATEGORY 2

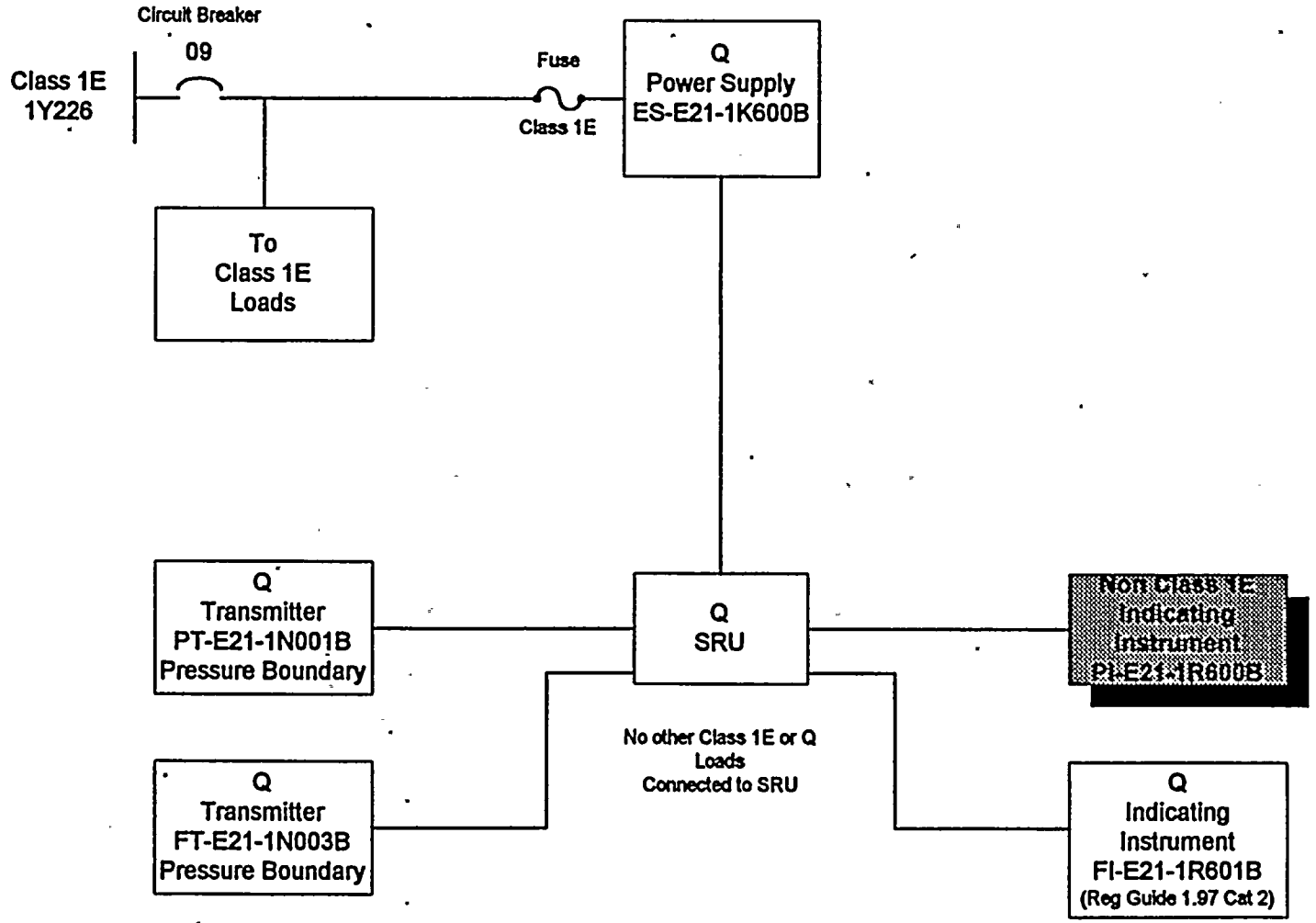

R1

GE1CAT24.VSD

SAFETY FUNCTION: CORE SPRAY Flow Indication Div II (REG GUIDE 1.97 Cat 2), Maintain Class 1E Power Supply 1Y226
NON CLASS 1E COMPONENTS: PI-E21-1R600B

COMPONENT ID	FAILURE MODE	LOCAL EFFECTS INCLUDING DEPENDENT FAILURES	SYSTEM EFFECTS	SINGLE FAILURE MET	REMARKS	
PI-E21-1R600B Indicating Meter (Non Class 1E)	Open Indicator	Loss of Core Spray Pressure Indication (PI-E21-1R600B)	None	YES	Indicator not required for DBA or for EOPs Provides Indication Only	R1
	Short Indicator	Loss of Core Spray Pressure Indication (PI-E21-1R600B)	None	YES	Indicator not required for DBA or for EOPs Provides Indication Only	R1
CABLES in same raceways as cable to Non Class 1E Component	Open cables (All Cables)	Loss of Core Spray Pressure Indication (PI-E21-1R600B)	None	YES	Indicator not required for DBA or for EOPs Provides Indication Only	R1
		Loss of Core Spray Flow Indication (FI-E21-1R601B)	None	YES	FI-E21-1R601B is Reg Guide 1.97 Cat 2 which does not require redundancy	
		Loss of Division II	None	YES	Division I available No Div I, Div I Aff or GE Div I/Non Sep associated cables in raceways	
		Loss of Channel B	None	YES	Channel A, C, D available. No Ch A,C, D or Ch A,C,D Aff, GE Ch A,C,D/Non Sep associated cables in raceways	

SAFETY FUNCTION: CORE SPRAY Flow Indication Div II (REG GUIDE 1.97 Cat 2), Maintain Class 1E Power Supply 1Y226
NON CLASS 1E COMPONENTS: PI-E21-1R600B

COMPONENT ID	FAILURE MODE	LOCAL EFFECTS INCLUDING DEPENDENT FAILURES	SYSTEM EFFECTS	SINGLE FAILURE MET	REMARKS	
CABLES in same raceways as cable to Non Class 1E Component	Short cables (All Cables)	Loss of Core Spray Pressure Indication (PI-E21-1R600B)	None	YES	Indicator not required for DBA or for EOPs Provides Indication Only	R1
		Loss of Core Spray Flow Indication (FI-E21-1R601B)	None	YES	FI-E21-1R601B is Reg Guide 1.97 Cat 2 which does not require redundancy	
		Loss of Division II	None	YES	Division I available No Div I, Div I Aff or GE Div II/Non Sep associated cables in raceways	
		Loss of Channel B	None	YES	Channel A, C, D available. No Ch A,C, D or Ch A,C,D Aff, GE Ch A,C,D/Non Sep associated cables in raceways	
	Impressed Voltage (All Cables)	Loss of Core Spray Pressure Indication (PI-E21-1R600B)	None	YES	Indicator not required for DBA or for EOPs Provides Indication Only	RJ
		Incorrect Core Spray Flow Indication (FI-E21-1R601B)	None	YES	FI-E21-1R601B is Reg Guide 1.97 Cat 2 which does not require redundancy	

SAFETY FUNCTION: CORE SPRAY Flow Indication Div II (REG GUIDE 1.97 Cat 2), Maintain Class 1E Power Supply 1Y226
NON CLASS 1E COMPONENTS: PI-E21-1R600B

COMPONENT ID	FAILURE MODE	LOCAL EFFECTS INCLUDING DEPENDENT FAILURES	SYSTEM EFFECTS	SINGLE FAILURE MET	REMARKS
CABLES in same raceways as cable to Non Class 1E Component	Impressed Voltage (All Cables)	Loss of Power Supply ES-E21-1K600B	None Only PI-E21-600B FI-E21-1R601B supplied from ES-E21-1K600B	YES	Division I available No Div I, Div I Aff or GE Div I/Non Sep associated cables in raceways Fuse opens at Power Supply before Class 1E Circuit Breaker opens. No Class 1E circuits connected to fuse (FSAR 8.1.6.1q5 Isolation Method iii)
		Loss of FT-E21-1N003B Electronics	None	YES	Division I available; Pressure Boundary Maintained
		Loss of PT-E21-1N001B Electronics	None	YES	Division I available; Pressure Boundary Maintained
		Loss of electronics to other Pressure Boundary Instruments with cables in contact with FM1PN1201	None	YES	Pressure Boundary not Maintained
		Loss of Division II	None	YES	Division I available No Div I, Div I Aff or GE Div I/Non Sep associated cables in raceways

SAFETY FUNCTION: CORE SPRAY Flow Indication Div II (REG GUIDE 1.97 Cat 2), Maintain Class 1E Power Supply 1Y226
NON CLASS 1E COMPONENTS: PI-E21-1R600B

COMPONENT ID	FAILURE MODE	LOCAL EFFECTS INCLUDING DEPENDENT FAILURES	SYSTEM EFFECTS	SINGLE FAILURE MET	REMARKS
CABLES in same raceways as cable to Non Class 1E Component	Impressed Voltage (All Cables)	Loss of Channel B	None	YES	Channel A, C, D available. No Ch A,C, D or Ch A,C,D Aff, GE Ch A,C,D/Non Sep associated cables in raceways

REFERENCES

J-452 SH 3 M1-E21-35 (2)

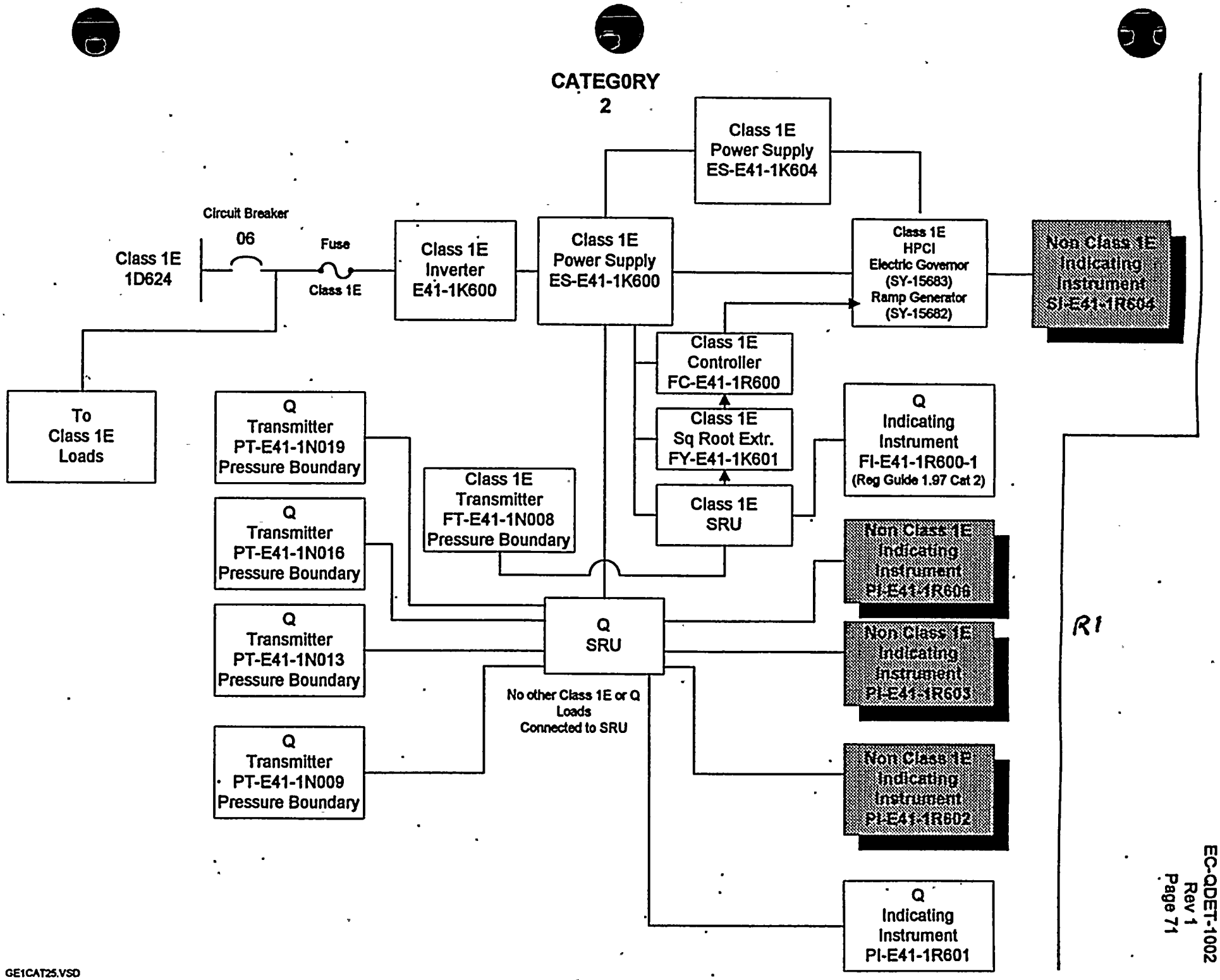
CATEGORY
2
Class 1E
Power Supply
ES-E41-1K604
Circuit Breaker
06
Fuse
Class 1E
1D624
Class 1E
Inverter
E41-1K600
Class 1E
Power Supply
ES-E41-1K600
Class 1E
HPCI
Electric Governor
(SY-15683)
Ramp Generator
(SY-15682)
Non Class 1E
Indicating
Instrument
SI-E41-1R604
Class 1E
Controller
FC-E41-1R600
To
Class 1E
Loads
Q
Transmitter
PT-E41-1N019
Pressure Boundary
Class 1E
Sq Root Extr.
FY-E41-1K601
Q
Indicating
Instrument
FI-E41-1R600-1
(Reg Guide 1.97 Cat 2)
Class 1E
Transmitter
FT-E41-1N008
Pressure Boundary
Class 1E
SRU
Q
Transmitter
PT-E41-1N016
Pressure Boundary
Non Class 1E
Indicating
Instrument
PI-E41-1R606
Q
Transmitter
PT-E41-1N013
Pressure Boundary
Q
SRU
Non Class 1E
Indicating
Instrument
PI-E41-1R603
No other Class 1E or Q
Loads
Connected to SRU
Q
Transmitter
PT-E41-1N009
Pressure Boundary
Non Class 1E
Indicating
Instrument
PI-E41-1R602
Q
Indicating
Instrument
PI-E41-1R601
R1

SAFETY FUNCTION: HIGH PRESSURE INJECTION; Pressure Boundaries; Maintain Class 1E Power Supply 1D624
NON CLASS 1E COMPONENTS: PI-E41-1R602, PI-E41-1R603, PI-E41-1R606, SI-E41-1R604

COMPONENT ID	FAILURE MODE	LOCAL EFFECTS INCLUDING DEPENDENT FAILURES	SYSTEM EFFECTS	SINGLE FAILURE MET	REMARKS
PI-E41-1R602 Indicating Meter (Non Class 1E)	Open Indicator	Loss of HPCI Pressure Indication (PI-E41-1R602)	None	YES	Indicator not required for DBA or for EOPs Provides Indication Only
	Short Indicator	Loss of HPCI Pressure Indication (PI-E41-1R602)	None	YES	Indicator not required for DBA or for EOPs Provides Indication Only
PI-E41-1R603 Indicating Meter (Non Class 1E)	Open Indicator	Loss of HPCI Pressure Indication (PI-E41-1R603)	None	YES	Indicator not required for DBA or EOPs except for Station Blackout EOP No failure mode for Station Blackout Limited QA for Station Blackout
	Short Indicator	Loss of HPCI Pressure Indication (PI-E41-1R603)	None	YES	Indicator not required for DBA or EOPs except for Station Blackout EOP No failure mode for Station Blackout Limited QA for Station Blackout
PI-E41-1R606 Indicating Meter (Non Class 1E)	Open Indicator	Loss of HPCI Pressure Indication (PI-E41-1R606)	None	YES	Indicator not required for DBA or EOPs except for Station Blackout EOP No failure mode for Station Blackout Limited QA for Station Blackout
	Short Indicator	Loss of HPCI Pressure Indication (PI-E41-1R606)	None	YES	Indicator not required for DBA or EOPs except for Station Blackout EOP No failure mode for Station Blackout Limited QA for Station Blackout
SI-E41-1R604 Indicating Meter (Non Class 1E)	Open Indicator	Loss of Speed Indication (SI-E41-1R604)	None	YES	Indicator not required for DBA or EOPs except for Station Blackout EOP No failure mode for Station Blackout Limited QA for Station Blackout
	Short Indicator	Loss of Speed Indication (SI-E41-1R604)	None	YES	Indicator not required for DBA or EOPs except for Station Blackout EOP No failure mode for Station Blackout Limited QA for Station Blackout

R1
R1
R1

SAFETY FUNCTION: HIGH PRESSURE INJECTION; Pressure Boundaries; Maintain Class 1E Power Supply 1D624
NON CLASS 1E COMPONENTS: PI-E41-1R602, PI-E41-1R603, PI-E41-1R606, SI-E41-1R604

COMPONENT ID	FAILURE MODE	LOCAL EFFECTS INCLUDING DEPENDENT FAILURES	SYSTEM EFFECTS	SINGLE FAILURE MET	REMARKS	
CABLES in same raceways as cable to Non Class 1E Component	Open cables (All Cables)	Loss of HPCI Pressure Indication (PI-E41-1R603, PI-E41-1R606)	None	YES	Indicator not required for DBA or EOPs except for Station Blackout EOP No failure mode for Station Blackout Limited QA for Station Blackout	R1
		Loss of HPCI Pressure Indication (PI-E41-1R601, PI-E41-1R602)	None	YES	Indicator not required for DBA or for EOPs Provides Indication Only	R1
		Loss of Speed Indication (SI-E41-1R604)	None	YES	Indicator not required for DBA or EOPs except for Station Blackout EOP No failure mode for Station Blackout Limited QA for Station Blackout	R1
		Loss of Division II	None	YES	Division I available No Div I, Div I Aff or GE Div I/Non Sep associated cables in raceways	
		Loss of Channel B	None	YES	Channel A, C, D available. No Ch A,C, D or Ch A,C,D Aff, GE Ch A,C,D/Non Sep associated cables in raceways	

SAFETY FUNCTION: HIGH PRESSURE INJECTION; Pressure Boundaries; Maintain Class 1E Power Supply 1D624
NON CLASS 1E COMPONENTS: PI-E41-1R602, PI-E41-1R603, PI-E41-1R606, SI-E41-1R604

COMPONENT ID	FAILURE MODE	LOCAL EFFECTS INCLUDING DEPENDENT FAILURES	SYSTEM EFFECTS	SINGLE FAILURE MET	REMARKS	
CABLES in same raceways as cable to Non Class 1E Component		Loss of HPCI Pressure Indication (PI-E41-1R603 PI-E41-1R606)	None	YES	Indicator not required for DBA or EOPs except for Station Blackout EOP No failure mode for Station Blackout Limited QA for Station Blackout	R1
		Loss of HPCI Pressure Indication (PI-E41-1R601, PI-E41-1R602)	None	YES	Indicator not required for DBA or for EOPs Provides Indication Only	R1
		Loss of Speed Indication (SI-E41-1R604)	None	YES	Indicator not required for DBA or EOPs except for Station Blackout EOP No failure mode for Station Blackout Limited QA for Station Blackout	R1
		Loss of Division II	None	YES	Division I available No Div I, Div I Aff or GE Div I/Non Sep associated cables in raceways	
		Loss of Channel B	None	YES	Channel A, C, D available. No Ch A,C, D or Ch A,C,D Aff, GE Ch A,C,D/Non Sep associated cables in raceways	

SAFETY FUNCTION: HIGH PRESSURE INJECTION; Pressure Boundaries; Maintain Class 1E Power Supply 1D624
NON CLASS 1E COMPONENTS: PI-E41-1R602, PI-E41-1R603, PI-E41-1R606, SI-E41-1R604

COMPONENT ID	FAILURE MODE	LOCAL EFFECTS INCLUDING DEPENDENT FAILURES	SYSTEM EFFECTS	SINGLE FAILURE MET	REMARKS	
CABLES in same raceways as cable to Non Class 1E Component	Impressed Voltage (All cables)	Loss of HPCI Pressure Indication (PI-E41-1R603 PI-E41-1R606)	None	YES	Indicator not required for DBA or EOPs except for Station Blackout EOP No failure mode for Station Blackout Limited QA for Station Blackout	R1
		Loss of HPCI Pressure Indication (PI-E41-1R601, PI-E41-1R602)	None	YES	Indicator not required for DBA or for EOPs Provides Indication Only	R1
		Loss of Speed Indication (SI-E41-1R604)	None	YES	Indicator not required for DBA or EOPs except for Station Blackout EOP No failure mode for Station Blackout Limited QA for Station Blackout	R1
		Loss of PT-E41-1N013 Electronics	None	YES	Pressure Boundary Maintained	
		Loss of PT-E41-1N016 Electronics	None	YES	Pressure Boundary Maintained	
		Loss of PT-E41-1N019 Electronics	None	YES	Pressure Boundary Maintained	
		Loss of PT-E41-1N009 Electronics	None	YES	Pressure Boundary Maintained	

SAFETY FUNCTION: HIGH PRESSURE INJECTION; Pressure Boundaries; Maintain Class 1E Power Supply 1D624
NON CLASS 1E COMPONENTS: PI-E41-1R602, PI-E41-1R603, PI-E41-1R606, SI-E41-1R604

COMPONENT ID	FAILURE MODE	LOCAL EFFECTS INCLUDING DEPENDENT FAILURES	SYSTEM EFFECTS	SINGLE FAILURE MET	REMARKS
CABLES in same raceways as cable to Non Class 1E Component	Impressed Voltage (All cables)	Loss of electronics to other Pressure Boundary Instruments with cables in contact with FM1PP1203	None	YES	Pressure Boundary Maintained
		Loss of Power Supply ES-E41-1K600B, 1K604 Loads:	None	YES	Fuse opens at Inverter before Class 1E Circuit Breaker opens. (FSAR 8.1.6.1q5 Isolation Method iii) Division I ADS available
		HPCI Gov. Control - Loss of HPCI	None	YES	Division I ADS available No Div I, Div I Aff or GE Div I/Non Sep associated cables in raceways
		HPCI Controller - Loss of HPCI	None	YES	Division I ADS available No Div I, Div I Aff or GE Div I/Non Sep associated cables in raceways
		FI-E41-1R600-1 - Loss of Indication	None	YES	FI-E21-1R600-1 is Reg Guide 1.97 Cat 2 which does not require redundancy

SAFETY FUNCTION: HIGH PRESSURE INJECTION; Pressure Boundaries; Maintain Class 1E Power Supply 1D624
NON CLASS 1E COMPONENTS: PI-E41-1R602, PI-E41-1R603, PI-E41-1R606, SI-E41-1R604

COMPONENT ID	FAILURE MODE	LOCAL EFFECTS INCLUDING DEPENDENT FAILURES	SYSTEM EFFECTS	SINGLE FAILURE MET	REMARKS
CABLES in same raceways as cable to Non Class 1E Component	Impressed Voltage (All cables)	FY-E41-1K601 - Loss of HPCI	None	Yes	Division I ADS available No Div I, Div I Aff or GE Div I/Non Sep associated cables in raceways
		Loss of Division II	None	YES	Division I available No Div I, Div I Aff or GE Div I/Non Sep associated cables in raceways
		Loss of Channel B	None	YES	Channel A, C, D available. No Ch A,C, D or Ch A,C,D Aff, GE Ch A,C,D/Non Sep associated cables in raceways

References:

J-455 Sh 1
J-455 Sh 2
J-456 Sh 3

M1-E41-69 (3)
M-155 Sh 1

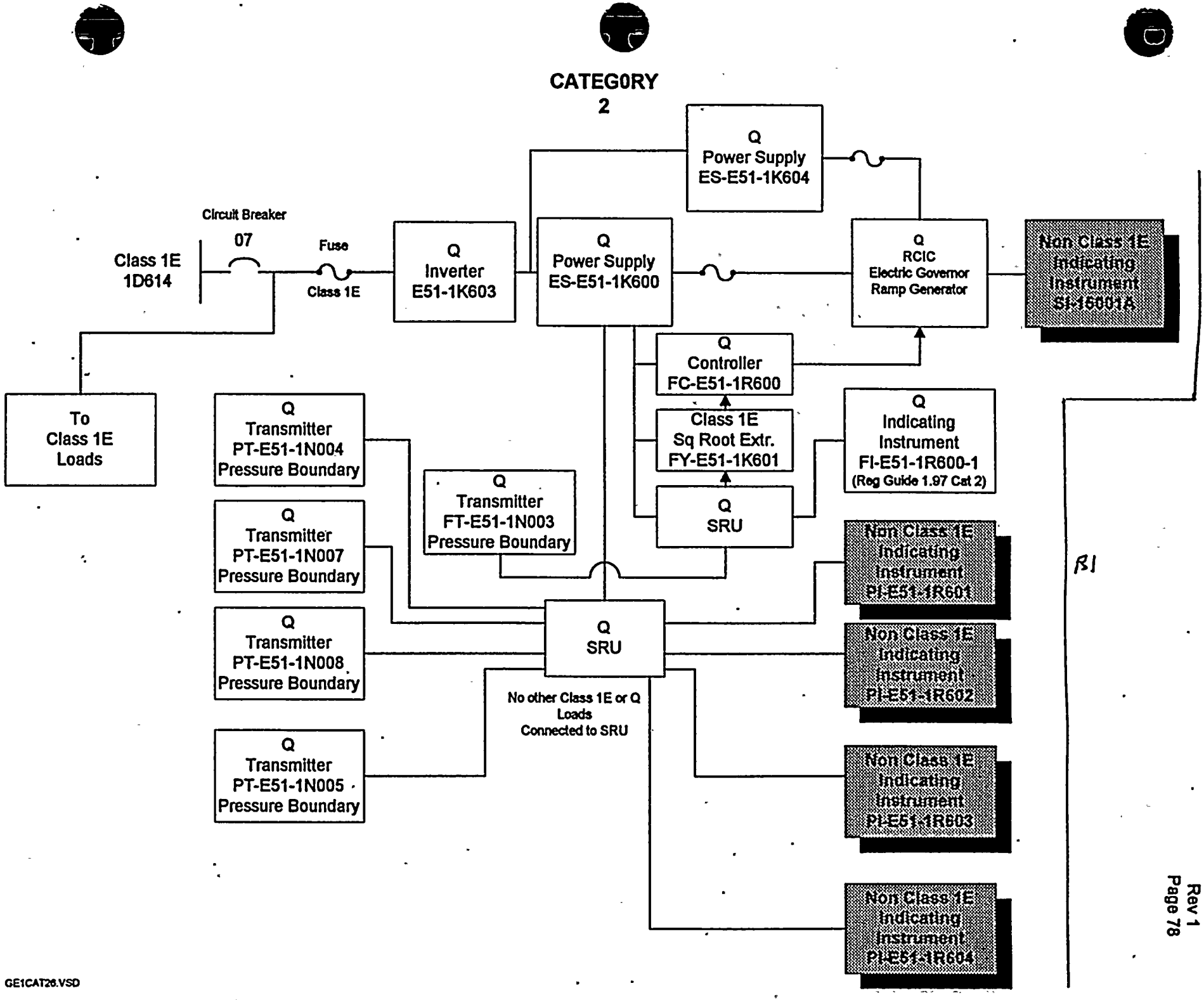

GE1CAT26.VSD

SAFETY FUNCTION: RCIC PRESSURE BOUNDARIES, MAINTAIN CLASS 1E POWER SUPPLY 1D614
NON CLASS 1E COMPONENTS:PI-E51-1R601; PI-E51-1R602; PI-E51-603; PI-E51-1R604, SI-15001A

COMPONENT ID	FAILURE MODE	LOCAL EFFECTS INCLUDING DEPENDENT FAILURES	SYSTEM EFFECTS	SINGLE FAILURE MET	REMARKS	
PI-E51-1R601 Indicating Meter (Non Class 1E)	Open Indicator	Loss of Pressure Indication (PI-E51-1R601)	None	YES	Indicator not required for DBA or EOPs except for Station Blackout EOP No failure mode for Station Blackout Limited QA for Station Blackout	R1
	Short Indicator	Loss of Pressure Indication (PI-E51-1R601)	None	YES	Indicator not required for DBA or EOPs except for Station Blackout EOP No failure mode for Station Blackout Limited QA for Station Blackout	
PI-E51-1R602 Indicating Meter (Non Class 1E)	Open Indicator	Loss of Pressure Indication (PI-E51-1R602)	None	YES	Indicator not required for DBA or for EOPs Provides Indication Only	R1
	Short Indicator	Loss of Pressure Indication (PI-E51-1R602)	None	YES	Indicator not required for DBA or for EOPs Provides Indication Only	R1
PI-E51-1R603 Indicating Meter (Non Class 1E)	Open Indicator	Loss of Pressure Indication (PI-E51-1R603)	None	YES	Indicator not required for DBA or EOPs except for Station Blackout EOP No failure mode for Station Blackout Limited QA for Station Blackout	R1
	Short Indicator	Loss of Pressure Indication (PI-E51-1R603)	None	YES	Indicator not required for DBA or EOPs except for Station Blackout EOP No failure mode for Station Blackout Limited QA for Station Blackout	
PI-E51-1R604 Indicating Meter (Non Class 1E)	Open Indicator	Loss of Pressure Indication (PI-E51-1R604)	None	YES	Indicator not required for DBA or EOPs except for Station Blackout EOP No failure mode for Station Blackout Limited QA for Station Blackout	
	Shorted Indicator	Loss of Pressure Indication (PI-E51-1R604)	None	YES	Indicator not required for DBA or EOPs except for Station Blackout EOP No failure mode for Station Blackout Limited QA for Station Blackout	

SAFETY FUNCTION: RCIC PRESSURE BOUNDARIES, MAINTAIN CLASS 1E POWER SUPPLY 1D614
NON CLASS 1E COMPONENTS:PI-E51-1R601; PI-E51-1R602; PI-E51-603; PI-E51-1R604, SI-15001A

COMPONENT ID	FAILURE MODE	LOCAL EFFECTS INCLUDING DEPENDENT FAILURES	SYSTEM EFFECTS	SINGLE FAILURE MET	REMARKS	
SI-15001A Indicating Meter (Non Class 1E)	Open Indicator	Loss of Speed Indication (SI-15001A)	None	YES	Indicator not required for DBA or EOPs except for Station Blackout EOP No failure mode for Station Blackout Limited QA for Station Blackout	R1
	Shorted Indicator	Loss of Speed Indication (SI-15001A)	None	YES	Indicator not required for DBA or EOPs except for Station Blackout EOP No failure mode for Station Blackout Limited QA for Station Blackout	R1
CABLES in same raceways as cable to Non Class 1E Component	Open cables (All Cables)	Loss of Pressure Indications (PI-E51-1R602)	None	YES	Indicator not required for DBA or for EOPs Provides Indication Only	R1
		Loss of Indication (PI-E51-1R601,PI-E51-1R603 PI-E51-1R604, SI-15001A)	None	YES	Indicator not required for DBA or EOPs except for Station Blackout EOP No failure mode for Station Blackout Limited QA for Station Blackout	R1
		Loss of Division I	None	YES	Division II available No Div II, Div II Aff or GE Div II/Non Sep associated cables in raceways	
		Loss of Channel A	None	YES	Channel B, C, D available. No Ch B,C, D or Ch B,C,D Aff, GE Ch B,C,D/Non Sep associated cables in raceways	

SAFETY FUNCTION: RCIC PRESSURE BOUNDARIES, MAINTAIN CLASS 1E POWER SUPPLY 1D614
NON CLASS 1E COMPONENTS:PI-E51-1R601; PI-E51-1R602; PI-E51-603; PI-E51-1R604, SI-15001A

COMPONENT ID	FAILURE MODE	LOCAL EFFECTS INCLUDING DEPENDENT FAILURES	SYSTEM EFFECTS	SINGLE FAILURE MET	REMARKS	
CABLES in same raceways as cable to Non Class 1E Component	Short cables (All cables)	Loss of Pressure Indication (PI-E51-1R602)	None	YES	Indicator not required for DBA or for EOPs Provides Indication Only	R1
		Loss of Indication (PI-E51-1R601,PI-E51-1R603 PI-E51-1R604, SI-15001A)	None	YES	Indicator not required for DBA or EOPs except for Station Blackout EOP No failure mode for Station Blackout Limited QA for Station Blackout	R1
		Loss of Division I	None	YES	Division II available No Div II, Div II Aff or GE Div II/Non Sep associated cables in raceways	
		Loss of Channel A	None	YES	Channel B, C, D available. No Ch B,C, D or Ch B,C,D Aff, GE Ch B,C,D/Non Sep associated cables in raceways	

SAFETY FUNCTION: RCIC PRESSURE BOUNDARIES, MAINTAIN CLASS 1E POWER SUPPLY 1D614
NON CLASS 1E COMPONENTS:PI-E51-1R601; PI-E51-1R602; PI-E51-603; PI-E51-1R604, SI-15001A

COMPONENT ID	FAILURE MODE	LOCAL EFFECTS INCLUDING DEPENDENT FAILURES	SYSTEM EFFECTS	SINGLE FAILURE MET	REMARKS	
CABLES in same raceways as cable to Non Class 1E Component	Impressed Voltage (All cables)	Loss of Pressure Indication (PI-E51-1R602)	None	YES	Indicators not required for DBA or for EOPs Provides Indication Only	R1
		Loss of Indication (PI-E51-1R601,PI-E51-1R603 PI-E51-1R604, SI-15001A)	None	YES	Indicator not required for DBA or EOPs except for Station Blackout EOP No failure mode for Station Blackout Limited QA for Station Blackout	R1
		Loss of Division I	None	YES	Division II available No Div II, Div II Aff or GE Div II/Non Sep associated cables in raceways	
		Loss of Channel A	None	YES	Channel B, C, D available. No Ch B,C, D or Ch B,C,D Aff, GE Ch B,C,D/Non Sep associated cables in raceways	

SAFETY FUNCTION: RCIC PRESSURE BOUNDARIES, MAINTAIN CLASS 1E POWER SUPPLY 1D614
NON CLASS 1E COMPONENTS:PI-E51-1R601; PI-E51-1R602; PI-E51-603; PI-E51-1R604, SI-15001A

COMPONENT ID	FAILURE MODE	LOCAL EFFECTS INCLUDING DEPENDENT FAILURES	SYSTEM EFFECTS	SINGLE FAILURE MET	REMARKS
CABLES in same raceways as cable to Non Class 1E Component	Impressed Voltage (All cables)	Loss of Power Supply ES-E51-1K600, 1K604 Loads:			Fuse opens at Inverter before Class 1E Circuit Breaker opens: No Class 1E circuits connected to fuse (FSAR 8.1.6.1q5 Isolation Method iii)
		RCIC Gov. Control - Loss of RCIC	None - RCIC not required for DBA	YES	Division II available No Div II, Div II Aff or GE Div II/Non Sep associated cables in raceways
		RCIC Controller - Loss of RCIC	None - RCIC not required for DBA	YES	Division II available No Div II, Div II Aff or GE Div II/Non Sep associated cables in raceways
		FI-E51-1R600-1 - Loss of Indication	None	YES	FI-E51-1R600-1 is Reg Guide 1.97 Cat 2 which does not require redundancy
		FY-E51-1K601 - Loss of RCIC	None - RCIC not required for DBA	Yes	Division II available No Div II, Div II Aff or GE Div II/Non Sep associated cables in raceways

SAFETY FUNCTION: RCIC PRESSURE BOUNDARIES, MAINTAIN CLASS 1E POWER SUPPLY 1D614
NON CLASS 1E COMPONENTS:PI-E51-1R601; PI-E51-1R602; PI-E51-603; PI-E51-1R604, SI-15001A

COMPONENT ID	FAILURE MODE	LOCAL EFFECTS INCLUDING DEPENDENT FAILURES	SYSTEM EFFECTS	SINGLE FAILURE MET	REMARKS
CABLES in same raceways as cable to Non Class 1E Component	Impressed Voltage (All cables)	Loss of PT-E51-1N004 Electronics	None	YES	Pressure Boundary Maintained
		Loss of PT-E51-1N007 Electronics	None	YES	Pressure Boundary Maintained
		Loss of PT-E51-1N008 Electronics	None	YES	Pressure Boundary Maintained
		Loss of PT-E51-1N005 Electronics	None	YES	Pressure Boundary Maintained
		Loss of electronics to other Pressure Boundary Instruments with cables in contact with EM1PQ1302	None	YES	Pressure Boundary Maintained

References:

J-449 Sh 1
J-449 Sh 2
J-450 Sh 1

MI-E51-90(5)

APPENDIX C

SINGLE FAILURE ANALYSIS FOR CATEGORY 3 GE SUPPLIED NON CLASS 1E INSTRUMENTS CONNECTED TO Q CLASSIFIED INSTRUMENTS

CATEGORY 3

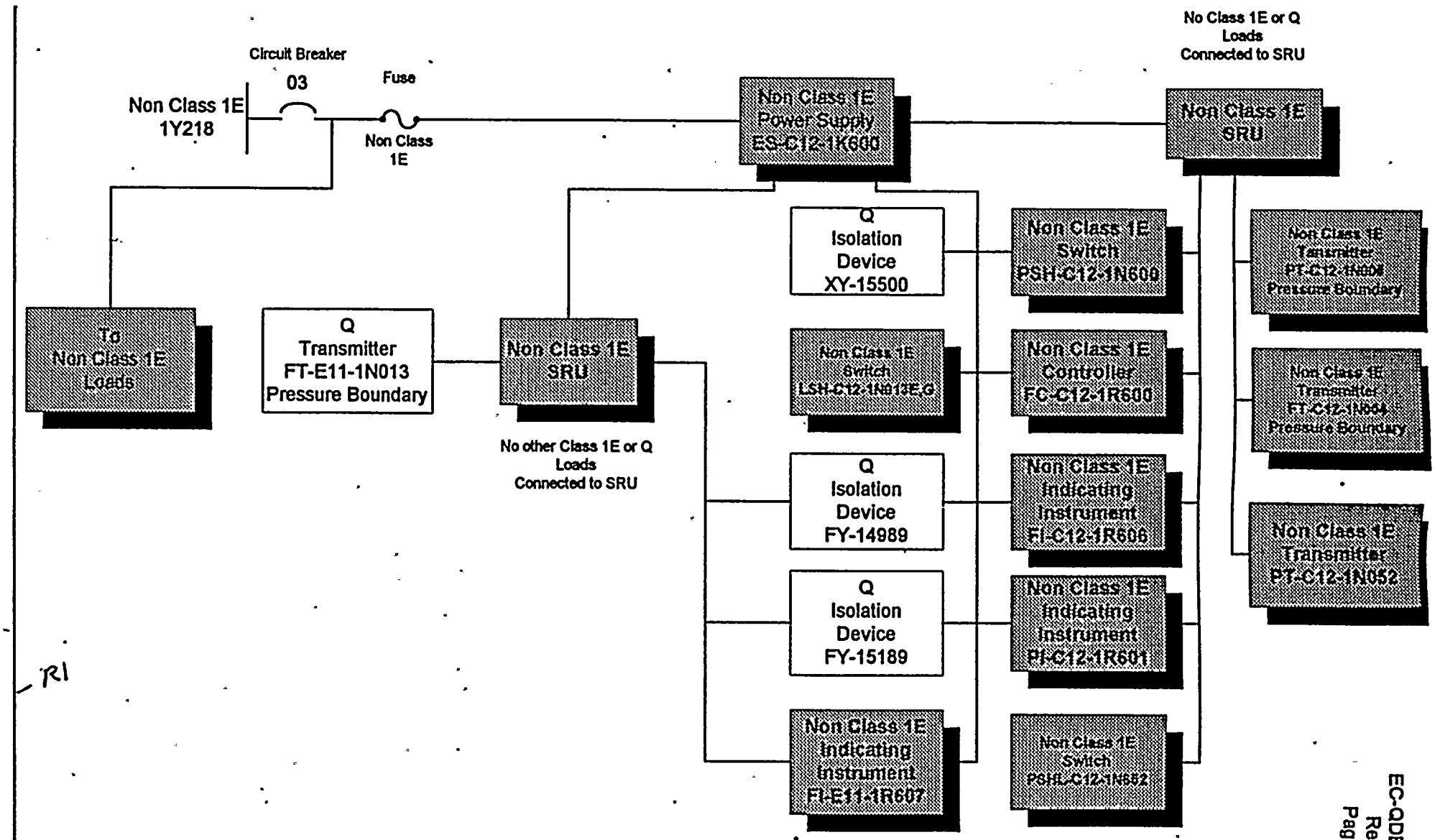

RI

GE1CAT31.VSD

SAFETY FUNCTION: RHR HEAD SPRAY PRESSURE BOUNDARY (FT-E11-1N013)
NON CLASS 1E COMPONENT(S): FI-E11-1R607

COMPONENT ID	FAILURE MODE	LOCAL EFFECTS INCLUDING DEPENDENT FAILURES	SYSTEM EFFECTS	SINGLE FAILURE MET	REMARKS	
FI-E11R607 Indicating Meter (Non Class 1E)	Open Indicator	Loss of Flow Indication (FI-E11-1R607)	None	YES	Indicator not required for DBA or for EOPs Provides Indication Only	R1
	Short Indicator	Loss of Flow Indication (FI-E11-1R607)	None	YES	Indicator not required for DBA or for EOPs Provides Indication Only	R1
CABLES in same raceways as cable to Non Class 1E Component	Open cables	Loss of Flow Indication (FI-E11-1R607)	None	YES	Indicator not required for DBA or for EOPs Provides Indication Only	R1
		Loss of Division I	None	YES	Division II available No Div II, Div II Aff or GE Div II/Non Sep associated cables in raceways	
	Open cables to Pressure Boundary instruments classified as Q	Loss of Non Class 1E Instrument Loops	None	YES	Non Class 1E Loops not required for DBA or for EOPs Pressure Boundary maintained (See Appendix K)	R1
	Open cables to Neutron Mon. Sys classified as Q	Loss of Recorders RR-D12-0R609, 0R610 RR-D12-1R605, 7, 8	None	YES	Recorders not required for DBA or for EOPs Provides Indication Only	R1

SAFETY FUNCTION: RHR HEAD SPRAY PRESSURE BOUNDARY (FT-E11-1N013)
NON CLASS 1E COMPONENT(S): FI-E11-1R607

COMPONENT ID	FAILURE MODE	LOCAL EFFECTS INCLUDING DEPENDENT FAILURES	SYSTEM EFFECTS	SINGLE FAILURE MET	REMARKS	
CABLES in same raceways as cable to Non Class 1E Component	Open cables to Neutron Mon. Sys classified as Q	Loss of IRM Sel Sw A,B,C,D, E,F,H. IRM Channels Trip	**Neutron Flux SCRAM**	YES	Fails in safe direction	R1
	Short cables	Loss of Flow Indication (FI-E11-1R607)	None	YES	Indicator not required for DBA or for EOPs Provides Indication Only	R1
		Loss of Division I	None	YES	Division II available No Div II, Div II Aff or GE Div II/Non Sep associated cables in raceways	
	Short cables to Pressure Boundary instruments classified as Q	Loss of Non Class 1E Instrument Loops	None	YES	Non Class 1E Loops not required for DBA or for EOPs Pressure Boundary maintained (See Appendix K)	R1
	Short cables to Neutron Mon. Sys classified as Q	Loss of Recorders RR-D12-0R609, 0R610 RR-D12-1R605, 7, 8	None	YES	Recorders not required for DBA or for EOPs Provides Indication Only	R1
		Loss of IRM Sel Sw A,B,C,D, E,F,H. IRM Channels Trip	**Neutron Flux SCRAM**	YES	Fails in safe direction	R1

SAFETY FUNCTION: RHR HEAD SPRAY PRESSURE BOUNDARY (FT-E11-1N013)
NON CLASS 1E COMPONENT(S): FI-E11-1R607

COMPONENT ID	FAILURE MODE	LOCAL EFFECTS INCLUDING DEPENDENT FAILURES	SYSTEM EFFECTS	SINGLE FAILURE MET	REMARKS	
CABLES in same raceways as cable to Non Class 1E Component	Impressed Voltage	Loss of Flow Indication (FI-E11-1R607)	None	YES	Indicator not required for DBA or for EOPs Provides Indication Only	R1
		Loss of Division I	None	YES	Division II available No Div II, Div II Aff or GE Div II/Non Sep associated cables in raceways	
		Loss of FT-E11-1N013 Electronics	None	YES	Pressure Boundary Maintained (See Appendix K)	
	Impressed voltage fault on cables to Pressure Boundary instruments classified as Q	Loss of electronics to Pressure Boundary Instruments with cables in contact with NM1PM1307	None	YES	Pressure Boundary Maintained (See Appendix K)	
	Impressed voltage fault cables to Neutron Mon. Sys classified as Q	Loss of Recorders RR-D12-0R609, 0R610 RR-D12-1R605, 7, 8	None	YES	Recorders not required for DBA or for EOPs Provides Indication Only	
		Loss of IRM Sel Sw A,B,C,D, E,F,H. IRM Channels Trip	Neutron Flux SCRAM	YES	Fails in safe direction	R1
References:						
J-451 SH 9 J-449 SH 3 J-446 SH 3	J-447 SH 2 M1-C12-110 (28) M1-C12-108(1)					

CATEGORY 3

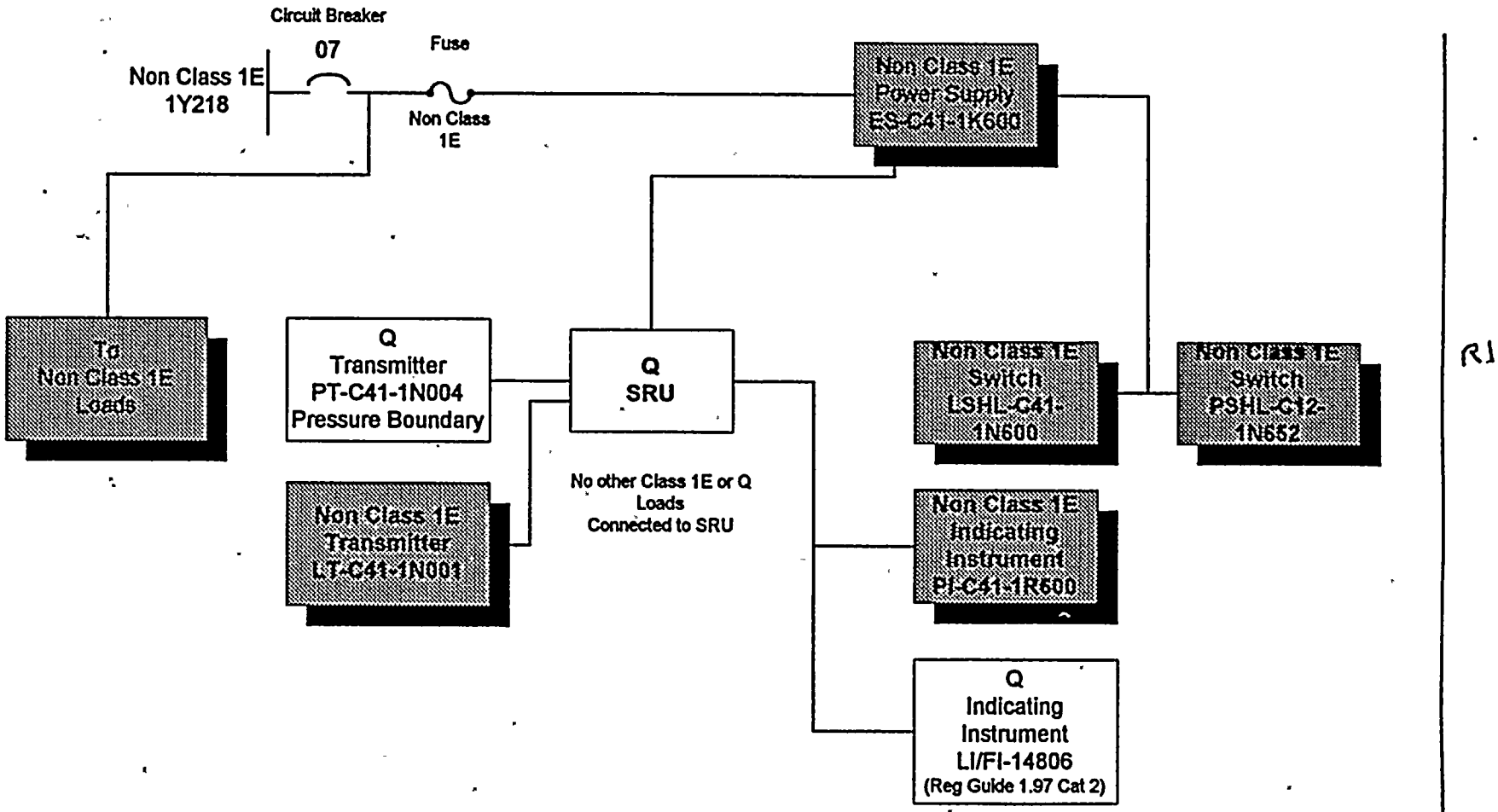

R1

GE1CAT32.VSD

SAFETY FUNCTION: Standby Liquid Control Pressure Boundary (PT-C41-1N004)
NON CLASS 1E COMPONENT(S): PI-C41-1R600, ES-C41-1K600

COMPONENT ID	FAILURE MODE	LOCAL EFFECTS INCLUDING DEPENDENT FAILURES	SYSTEM EFFECTS	SINGLE FAILURE MET	REMARKS	
PI-C41-1R600 Indicating Meter (Non Class 1E)	Open indicator	Loss of Pressure indication (PI-C41-1R600)	None	YES	Indicator not required for DBA or for EOPs Provides Indication Only	R1
	Short Indicator	Loss of Pressure indication (PI-C41-1R600)	None	YES	Indicator not required for DBA or for EOPs Provides Indication Only	R1
ES-C41-1K600 Power Supply (1Y218-07) (Non Class 1E)	Open Non Class 1E Power Supply	Loss of : PSHL-C12-1N652	None	YES	Alarms	
		PI-C41-1R600	None	YES	Indicator not required for DBA or for EOPs Provides Indication Only	R1
		LI/FI-14806	None	YES	Indicator not required for DBA or for EOPs Provides Indication Only Reg Guide 1.97 Cat 2 instruments do not require redundancy	R1
		LSHL-C41-1N600	None	Yes	Alarms	

ka

SAFETY FUNCTION: Standby Liquid Control Pressure Boundary (PT-C41-1N004)
NON CLASS 1E COMPONENT(S): PI-C41-1R600, ES-C41-1K600

COMPONENT ID	FAILURE MODE	LOCAL EFFECTS INCLUDING DEPENDENT FAILURES	SYSTEM EFFECTS	SINGLE FAILURE MET	REMARKS	
ES-C41-1K600 Power Supply (1Y218-07) (Non Class 1E)	Short Non Class 1E Power Supply	Loss of :				
		PSHL-C12-1N652	None	YES	Alarms	
		PI-C41-1R600	None	YES	Indicator not required for DBA or for EOPs Provides Indication Only	RI
		LI/FI-14806	None	YES	Indicator not required for DBA or for EOPs Provides Indication Only	RI
					Reg Guide 1.97 Cat 2 instruments do not require redundancy	
		LSHL-C41-1N600	None	YES	Alarms	
CABLES in same raceways as cables to Non Class 1E Component	Open Cables	Loss of Pressure indication (PI-C41-1R600)	None	YES	Indicator not required for DBA or for EOPs Provides Indication Only	RI
		Incorrect/Loss of FR-01204A (Non Class 1E)			Not Required for DBA or for EOPs	RI
		Loss of PT-C41-1N004 Output	None	YES	Pressure Boundary Maintaned	
		Loss of: PSHL-C12-1N652	None	YES	Alarms	

SAFETY FUNCTION: Standby Liquid Control Pressure Boundary (PT-C41-1N004)
NON CLASS 1E COMPONENT(S): PI-C41-1R600, ES-C41-1K600

COMPONENT ID	FAILURE MODE	LOCAL EFFECTS INCLUDING DEPENDENT FAILURES	SYSTEM EFFECTS	SINGLE FAILURE MET	REMARKS	
CABLES in same raceways as cables to Non Class 1E Component	Open Cables	Loss of:				
		PSHL-C12-1N652	None	YES	Alarms	
		LI/FI-14806	None	YES	Indicator not required for DBA or for EOPs Provides Indication Only Reg Guide 1.97 Cat 2 instruments do not require redundancy	R1
		LSHL-C41-1N600	None	YES	Alarms	
	Open cables to transducers classified as Q	Loss of:				
		Computer Inputs	None	YES	Computer not required for DBA or for EOPs	R1
		XI-00018A XI-00022A	None	YES	These are Non Class 1E meters used for Reg Guide 1.97 Cat 2 Reg Guide 1.97 Cat 2 instruments do not require redundancy	
	Open cables to Pressure Boundary instruments classified as Q	Loss of Non Class 1E Instrument Loops	None	YES	Non Class 1E Loops not required for DBA or for EOPs Pressure Boundaries Maintained	R1

SAFETY FUNCTION: Standby Liquid Control Pressure Boundary (PT-C41-1N004)
NON CLASS 1E COMPONENT(S): PI-C41-1R600, ES-C41-1K600

COMPONENT ID	FAILURE MODE	LOCAL EFFECTS INCLUDING DEPENDENT FAILURES	SYSTEM EFFECTS	SINGLE FAILURE MET	REMARKS	
CABLES in same raceways as cables to Non Class 1E Component	Short Cables	Loss of Pressure indication (PI-C41-1R600)	None	YES	Indicator not required for DBA or for EOPs Provides Indication Only	R1
		Incorrect/Loss of FR-01204A (Non Class 1E)			Not Required for DBA or for EOPs	R1
		Loss of PT-C41-1N004 Output	None	YES	Pressure Boundary Maintained	
		Loss of: PSHL-C12-1N652	None	YES	Alarms	
		PSHL-C12-1N652	None	YES	Alarms	
		LI/FI-14806	None	YES	Indicator not required for DBA or for EOPs Provides Indication Only Reg Guide 1.97 Cat 2 instruments do not require redundancy	R1
		LSHL-C41-1N600	None	YES	Alarms	
	Short cables to Pressure Boundary instruments classified as Q	Loss of Non Class 1E Instrument Loops	None	YES	Non Class 1E Loops not required for DBA or for EOPs Pressure Boundaries Maintained	R1

SAFETY FUNCTION: Standby Liquid Control Pressure Boundary (PT-C41-1N004)
NON CLASS 1E COMPONENT(S): PI-C41-1R600, ES-C41-1K600

COMPONENT ID	FAILURE MODE	LOCAL EFFECTS INCLUDING DEPENDENT FAILURES	SYSTEM EFFECTS	SINGLE FAILURE MET	REMARKS	
CABLES in same raceways as cables to Non Class 1E Component	Short cables to transducers classified as Q	Loss of:				
		Computer Inputs	None	YES	Computer not required for DBA or for EOPs	R1
		XI-00018A XI-00022A	None	YES	These are Non Class 1E meters used for Reg Guide 1.97 Cat 2 Reg Guide 1.97 Cat 2 instruments do not require redundancy	
CABLES in same raceways as cables to Non Class 1E Component	Impressed voltage Fault on cables	Incorect/Loss of Pressure Indication (PI-C41-1R600)	None	YES	Indication not required for DBA or for EOPs Provides Indication Only	R1
		Loss of PT-C41-1N004 Electronics	None	YES	Pressure Boundary Maintained	
		Loss of electronics to other Pressure Boundary Instruments with cables in contact with NM1Q0206C & NK1C41001	None	YES	Pressure Boundary Maintained	
		Incorrect/Loss of FR-01204A (Non Class 1E)	None	YES	Not Required for DBA or for EOPs	R1

SAFETY FUNCTION: Standby Liquid Control Pressure Boundary (PT-C41-1N004)
NON CLASS 1E COMPONENT(S): PI-C41-1R600, ES-C41-1K600

COMPONENT ID	FAILURE MODE	LOCAL EFFECTS INCLUDING DEPENDENT FAILURES	SYSTEM EFFECTS	SINGLE FAILURE MET	REMARKS	
CABLES in same raceways as cables to Non Class 1E Component	Impressed voltage Fault on cables	Incorrect ES-C41-1K600 power supply voltage to loads: High Voltage:				
		PSHL-C41-1N004	None	YES	No Alarms Alarm not required for DBA or for EOPs Alarms Only	R1
		Incorrect Indication from LI/FI-14806	None	YES	Indication not required for DBA or for EOPs Provides Indication Only Reg Guide 1.97 Cat 2 instruments do not require redundancy	R1
		PSHL-C41-1N004	None	YES	No Alarms Alarm not required for for DBA or for EOPs Alarms Only	R1
		Incorrect Indication from PI-C41-1R600	None	YES	Indication not required for DBA or for EOPs Provides Indication Only	R1

SAFETY FUNCTION: Standby Liquid Control Pressure Boundary (PT-C41-1N004)
NON CLASS 1E COMPONENT(S): PI-C41-1R600, ES-C41-1K600

COMPONENT ID	FAILURE MODE	LOCAL EFFECTS INCLUDING DEPENDENT FAILURES	SYSTEM EFFECTS	SINGLE FAILURE MET	REMARKS	
CABLES in same raceways as cables to Non Class 1E Component	Impressed voltage Fault on cables	Low Voltage:				
		Loss of PSHL-C41-1N004	None	YES	Alarms Alarms Only	
		Loss of Indication from LI/FI-14806	None	YES	Indication not required for DBA or for EOPs Provides Indication Only Reg Guide 1.97 Cat 2 instruments do not require redundancy	R1
		Incorrect ES-C41-1K600 power supply voltage to loads: Low Voltage:				
		Loss of PSHL-C41-1N004	None	YES	Alarms Alarms Only	
		Incorrect Indication from PI-C41-1R600	None	YES	Indication not required for DBA or for EOPs Provides Indication Only	R1
	Impressed voltage Fault on cables to Pressure Boundary instruments classified as Q	Loss of Non Class 1E Instrument Loops	None	YES	Non Class 1E Loops not required for DBA or for EOPs Pressure Boundaries Maintained	R1

SAFETY FUNCTION: Standby Liquid Control Pressure Boundary (PT-C41-1N004)
NON CLASS 1E COMPONENT(S): PI-C41-1R600, ES-C41-1K600

COMPONENT ID	FAILURE MODE	LOCAL EFFECTS INCLUDING DEPENDENT FAILURES	SYSTEM EFFECTS	SINGLE FAILURE MET	REMARKS
CABLES in same raceways as cables to Non Class 1E Component	Impressed voltage Fault on cables to transducers classified as Q	Loss of:			
		Computer Inputs	None	YES	Computer not required for DBA or for EOPs
		XI-00018A XI-00022A	None	YES	These are Non Class 1E meters used for Reg Guide 1.97 Cat 2 Reg Guide 1.97 Cat 2 instruments do not require redundancy

References:

J-448 Sh 3
J-447 Sh 2
M-148 Sh 1
M1-C41-36 Sh 1
M1-C12-108 Sh 1

CATEGORY 3

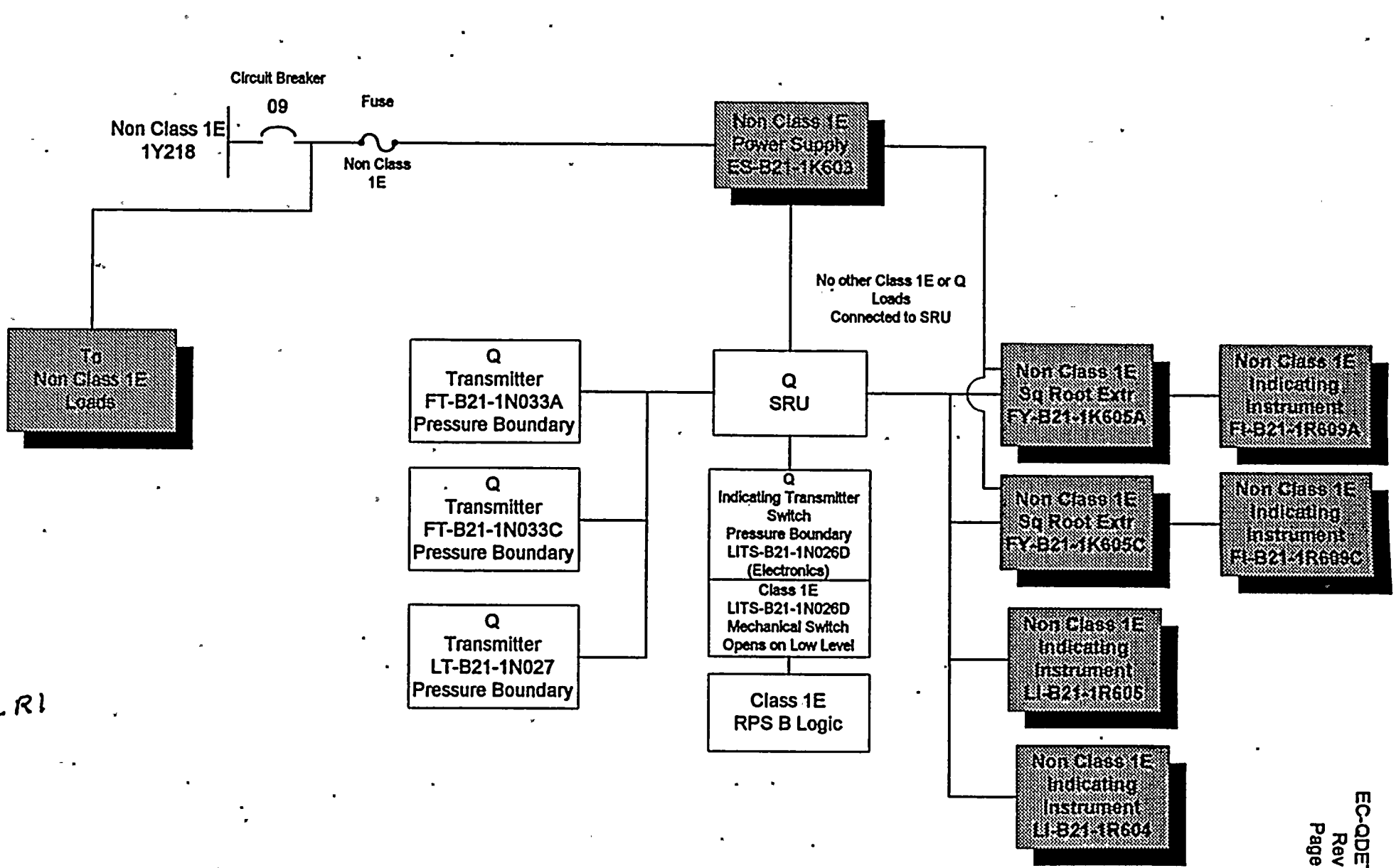

R1

GE1CAT33.VSD

SAFETY FUNCTION: REACTOR VESSEL LEVEL TRIP (LITS-B21-1N026D)
NON CLASS 1E COMPONENT(S): LI-B21-1R604, ES-B21-1K603

COMPONENT ID	FAILURE MODE	LOCAL EFFECTS INCLUDING DEPENDENT FAILURES	SYSTEM EFFECTS	SINGLE FAILURE MET	REMARKS	
LI-B21-1R604 Indicating Meter (Non Class 1E	Open Indicating Meter	Loss of Reactor Level Ind. LI-B21-1R604	None	YES	Indication not required for DBA or for EOPs Provides Indication Only. No electrical connection between electronics & Mechanical Switch	R1
	Short Indicating Meter	Loss of Reactor Level Ind. LI-B21-1R604	None	YES	Indication not required for DBA or for EOPs Provides Indication Only. No electrical connection between electronics & Mechanical Switch	R1
ES-B21-1K603 Power Supply (1Y218-09 Non Class 1E)	Open Power Supply	Loss of Reactor Level Ind. LI-B21-1R604	None	YES	Indication not required for DBA or for EOPs Provides Indication Only. No electrical connection between electronics & Mechanical Switch	R1
		Loss of Reactor Level Ind. LI-B21-1R605	None	YES	Indication not required for DBA or for EOPs Provides Indication Only	R1
		Loss of Jet Pump Flow Ind. FI-B21-1R609A, C	None	YES	Indication not required for DBA or for EOPs Provides Indication Only	R1

SAFETY FUNCTION: REACTOR VESSEL LEVEL TRIP (LITS-B21-1N026D)
NON CLASS 1E COMPONENT(S): LI-B21-1R604, ES-B21-1K603

COMPONENT ID	FAILURE MODE	LOCAL EFFECTS INCLUDING DEPENDENT FAILURES	SYSTEM EFFECTS	SINGLE FAILURE MET	REMARKS	
ES-B21-1K603 Power Supply (1Y218-09 Non Class 1E)	Short Power Supply	Loss of Reactor Level Ind. LI-B21-1R604	None	YES	Indication not required for DBA or for EOPs Provides Indication Only. No electrical connection between electronics & Mechanical Switch	R1
		Loss of Reactor Level Ind. LI-B21-1R605	None	YES	Indication not required for DBA or for EOPs Provides Indication Only	R1
		Loss of Jet Pump Flow Ind. FI-B21-1R609A, C	None	YES	Indication not required for DBA or for EOPs Provides Indication Only	R1
CABLES in same raceways as cables to Non Class 1E Component	Open Cables	Loss of Reactor Level Ind. LI-B21-1R604	None	YES	Indication not required for DBA or for EOPs Provides Indication Only. No electrical connection between electronics & Mechanical Switch	R1
		Loss of Reactor Level Ind. LI-B21-1R605	None	YES	Indication not required for DBA or for EOPs Provides Indication Only	R1
		Loss of Non Class 1E Instrument Loops	None	YES	Non Class 1E Loops not required for DBA or for EOPs Pressure Boundaries Maintained	R1.

SAFETY FUNCTION: REACTOR VESSEL LEVEL TRIP (LITS-B21-1N026D)
NON CLASS 1E COMPONENT(S): LI-B21-1R604, ES-B21-1K603

COMPONENT ID	FAILURE MODE	LOCAL EFFECTS INCLUDING DEPENDENT FAILURES	SYSTEM EFFECTS	SINGLE FAILURE MET	REMARKS	
CABLES in same raceways as cables to Non Class 1E Component	Open Cables	Loss of IRM Range Neutron Flux Recorders	None	YES	Recorders not required for DBA or for EOPs Provides Indication Only	R1
		Loss of Process Radiation Recorders	None	YES	Recorders not required for DBA or for EOPs Provides Indication Only	R1
		Loss of Computer & SPDS Inputs	None	YES	Computer & SPDS not required for DBA or for EOPs Provides Indication Only	RJ
		Loss of IRM Sel Sw A,B,C,D, E,F,H. IRM Channels Trip	**Neutron Flux SCRAM**	YES	Fails in safe direction	
CABLES in same raceways as cables to Non Class 1E Component	Short Cables	Loss of Reactor Level Ind. LI-B21-1R604	None	YES	Indication not required for DBA or for EOPs Pressure Boundary Maintained. No electrical connection between electronics & Mechanical Switch	R1
		Loss of Reactor Level Ind. LI-B21-1R605	None	YES	Indication not required for DBA or for EOPs Pressure Boundary Maintained	R1
		Loss of Non Class 1E Instrument Loops	None	YES	Non Class 1E Loops not required for DBA or for EOPs Pressure Boundaries maintained	R1

SAFETY FUNCTION: REACTOR VESSEL LEVEL TRIP (LITS-B21-1N026D)
NON CLASS 1E COMPONENT(S): LI-B21-1R604, ES-B21-1K603

COMPONENT ID	FAILURE MODE	LOCAL EFFECTS INCLUDING DEPENDENT FAILURES	SYSTEM EFFECTS	SINGLE FAILURE MET	REMARKS	
CABLES in same raceways as cables to Non Class 1E Component	Short Cables	Loss of IRM Range Neutron Flux Recorders	None	YES	Recorders not required for DBA or for EOPs Provides Indication Only	R1
		Loss of Process Radiation Recorders	None	YES	Recorders not required for DBA or for EOPs Provides Indication Only	R1
		Loss of Computer & SPDS Inputs	None	YES	Computer & SPDS not required for DBA or for EOPs Provides Indication Only	R1
		Loss of IRM Sel Sw A,B,C,D, E,F,H. IRM Channels Trip	**Neutron Flux SCRAM**	YES	Fails in safe direction	
CABLES in same raceways as cables to Non Class 1E Component	Impressed Voltage Fault on cables	Loss of Reactor Level Ind. LI-B21-1R605	None	YES	Indication not required for DBA or for EOPs Pressure Boundary Maintained	R1
		Loss of Reactor Level Ind. LI-B21-1R604	None	YES	Indication not required for DBA or for EOPs Pressure Boundary Maintained. No electrical connection between electronics & Mechanical Switch	R1

SAFETY FUNCTION: REACTOR VESSEL LEVEL TRIP (LITS-B21-1N026D)
NON CLASS 1E COMPONENT(S): LI-B21-1R604, ES-B21-1K603

COMPONENT ID	FAILURE MODE	LOCAL EFFECTS INCLUDING DEPENDENT FAILURES	SYSTEM EFFECTS	SINGLE FAILURE MET	REMARKS	
CABLES in same raceways as cables to Non Class 1E Component	Impressed Voltage Fault on cables	Loss of Process Radiation Recorders	None	YES	Recorders not required for DBA or for EOPs Provides Indication Only	R1
		Loss of Computer & SPDS Inputs	None	YES	Computer & SPDS not required for DBA or for EOPs Provides Indication Only	R1
		Loss of electronics to other Pressure Boundary Instruments with cables in contact with NM1P1F101	None	YES	Pressure Boundary Maintained	
		Loss of IRM Sel Sw A,B,C,D, E,F,H. IRM Channels Trip	Neutron Flux SCRAM	YES	Fails in safe direction	
		Loss of IRM Range Neutron Flux Recorders	None	YES	Recorders not required for DBA or for EOPs Provides Indication Only	R1

References:

J-442 SH 16
J-442 SH 11
M1-B21-94 SH 1

APPENDIX D

SINGLE FAILURE ANALYSIS FOR CATEGORY 4 GE SUPPLIED NON CLASS 1E INSTRUMENTS CONNECTED TO Q CLASSIFIED INSTRUMENTS

CATEGORY
4

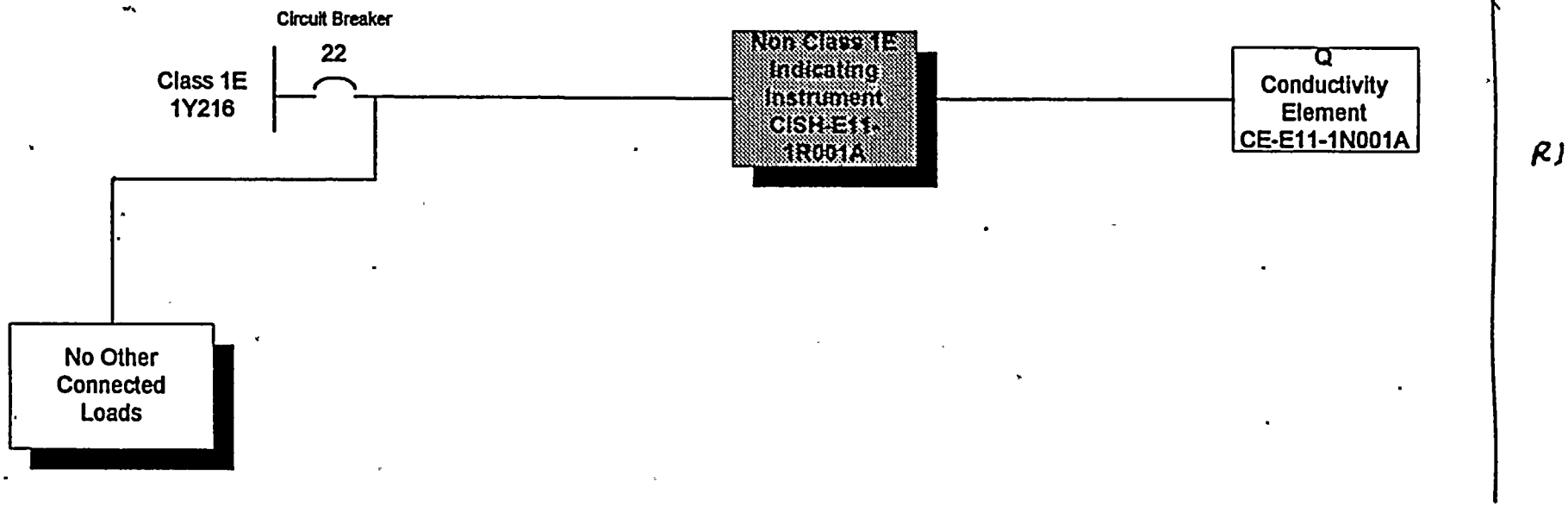

RJ

GE1CAT41.VSD

SAFETY FUNCTION: MAINTAIN CLASS 1E POWER SUPPLY 1Y216
NON CLASS 1E COMPONENTS: CISH-E11-1R001A

COMPONENT ID	FAILURE MODE	LOCAL EFFECTS INCLUDING DEPENDENT FAILURES	SYSTEM EFFECTS	SINGLE FAILURE MET	REMARKS	
CE-E11-1N001A Conductivity Element (Q)	Opens	Loss of Conductivity Indication (CISH-E11-1R001A)	None	YES	Indicator not required for DBA or for EOPs Provides Indication Only	R1
		Loss of Conductivity Ann Input (CISH-E11-1R001A)	None	YES	Ann. not required for DBA or for EOPs. Ann. Only	R1
	Shorts	Loss of Conductivity Indication (CISH-E11-1R001A)	None	YES	Indicator not required for DBA or for EOPs Provides Indication Only	R1
		Loss of Conductivity Ann Input (CISH-E11-1R001A)	None	YES	Ann. not required for DBA or for EOPs. Ann. Only	R1
CISH-E11-1R001A Conductivity Indicating Switch (Non Class 1E)	Open Indicator	Loss of Conductivity Indication (CISH-E11-1R001A)	None	YES	Indicator not required for DBA or for EOPs Provides Indication Only	R1
		Loss of Conductivity Ann Input (CISH-E11-1R001A)	None	YES	Ann. not required for DBA or for EOPs. Ann. Only	R1
	Short Indicator	Loss of Conductivity Indication (CISH-E11-1R001A)	None	YES	Indicator not required for DBA or for EOPs Provides Indication Only	R1
		Loss of Conductivity Ann Input (CISH-E11-1R001A)	None	YES	Ann. not required for DBA or for EOPs. Ann. Only	R1

SAFETY FUNCTION: MAINTAIN CLASS 1E POWER SUPPLY 1Y216
NON CLASS 1E COMPONENTS: CISH-E11-1R001A

COMPONENT ID	FAILURE MODE	LOCAL EFFECTS INCLUDING DEPENDENT FAILURES	SYSTEM EFFECTS	SINGLE FAILURE MET	REMARKS	
CISH-E11-1R001A Conductivity Indicating Switch (Non Class 1E)	Short Indicator	Trip 1Y216 Circuit Breaker 22	None	YES	No Class 1E circuits connected to 1Y216-22	
CABLES in same raceways as cable to Non Class 1E Component	Open Cables (All cables)	Loss of Conductivity Indication (CISH-E11-1R001A)	None	YES	Indicator not required for DBA or for EOPs Provides Indication Only	R1
		Loss of Conductivity Ann Input (CISH-E11-1R001A)	None	YES	Ann. not required for DBA or for EOPs.	R1
		Loss of one Input to TRS-E11-1R601	None	YES	Indicator not required for DBA or for EOPs Provides Indication Only	R1
	Short Cables (All cables	Loss of Conductivity Indication (CISH-E11-1R001A)	None	YES	Indicator not required for DBA or for EOPs Provides Indication Only	R1
		Loss of Conductivity Ann Input (CISH-E11-1R001A)	None	YES	Ann. not required for DBA or for EOPs. Ann. Only	R1
		Trip 1Y216 Circuit Breaker 22	None	YES	No Class 1E circuits connected to 1Y216-22	

SAFETY FUNCTION: MAINTAIN CLASS 1E POWER SUPPLY 1Y216
NON CLASS 1E COMPONENTS: CISH-E11-1R001A

COMPONENT ID	FAILURE MODE	LOCAL EFFECTS INCLUDING DEPENDENT FAILURES	SYSTEM EFFECTS	SINGLE FAILURE MET	REMARKS	
CABLES in same raceways as cable to Non Class 1E Component	Short Cables (All cables)	Loss of one Input to TRS-E11-1R601	None	YES	Indicator not required for DBA or for EOPs Provides Indication Only	R1
	Impressed Voltage (All cables)	Loss of Conductivity Indication (CISH-E11-1R001A)	None	YES	Indicator not required for DBA or for EOPs Provides Indication Only	R1
		Loss of Conductivity Ann Input (CISH-E11-1R001A)	None	YES	Ann. not required for DBA or for EOPs. Ann. Only	R1
		Loss of CE-E11-1N001A (See IOM 311-1 Tab 19)	None	YES	Boundary Maintained	
		Loss of one Input to TRS-E11-1R601	None	YES	Indicator not required for DBA or for EOPs Provides Indication Only	R1

References:

J-451 Sh 18
M1-E11-66 (14)
E-15 Sh 3

IOM 311-1
EC-017-1012

CATEGORY
4

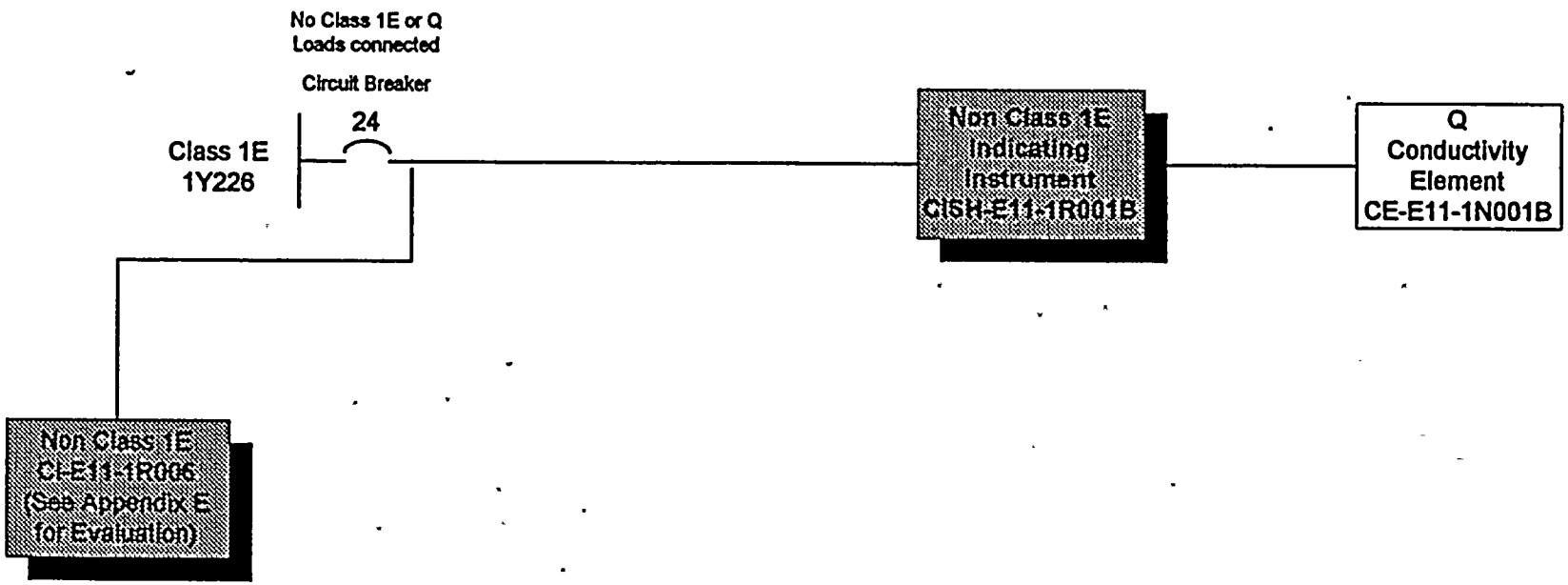

R1

GE1CAT42.VSD

SAFETY FUNCTION: MAINTAIN CLASS 1E POWER SUPPLY 1Y226
NON CLASS 1E COMPONENTS: CISH-E11-1R001B

COMPONENT ID	FAILURE MODE	LOCAL EFFECTS INCLUDING DEPENDENT FAILURES	SYSTEM EFFECTS	SINGLE FAILURE MET	REMARKS	
CE-E11-1N001B Conductivity Element (Q)	Opens	Loss of Conductivity Indication (CISH-E11-1R001B)	None	YES	Indicator not required for DBA or for EOPs Provides Indication Only	R1
		Loss of Conductivity Ann Input (CISH-E11-1R001B)	None	YES	Ann. not required for DBA or for EOPs. Ann. Only	R1
	Shorts	Loss of Conductivity Indication (CISH-E11-1R001B)	None	YES	Indicator not required for DBA or for EOPs Provides Indication Only	R1
		Loss of Conductivity Ann Input (CISH-E11-1R001B)	None	YES	Ann. not required for DBA or for EOPs. Ann. Only	R1
CISH-E11-1R001B Conductivity Indicating Switch (Non Class 1E)	Open Indicator	Loss of Conductivity Indication (CISH-E11-1R001B)	None	YES	Indicator not required for DBA or for EOPs Provides Indication Only	R1
		Loss of Conductivity Ann Input (CISH-E11-1R001B)	None	YES	Ann. not required for DBA or for EOPs. Ann. Only	R1
	Short Indicator	Loss of Conductivity Indication (CISH-E11-1R001B)	None	YES	Indicator not required for DBA or for EOPs Provides Indication Only	R1
		Loss of Conductivity Ann Input (CISH-E11-1R001B)	None	YES	Ann. not required for DBA or for EOPs Ann. Only	R1

SAFETY FUNCTION: MAINTAIN CLASS 1E POWER SUPPLY 1Y226
NON CLASS 1E COMPONENTS: CISH-E11-1R001B

COMPONENT ID	FAILURE MODE	LOCAL EFFECTS INCLUDING DEPENDENT FAILURES	SYSTEM EFFECTS	SINGLE FAILURE MET	REMARKS	
CISH-E11-1R001B Conductivity Indicating Switch (Non Class 1E)	Short Indicator	Trip 1Y226 Circuit Breaker 24	None	YES	No Class 1E circuits connected to 1Y226-24	
CABLES in same raceways as cable to Non Class 1E Component	Open Cables (All cables)	Loss of Conductivity Indication (CISH-E11-1R001B)	None	YES	Indicator not required for DBA or for EOPs Provides Indication Only	R1
		Loss of Conductivity Ann Input (CISH-E11-1R001B)	None	YES	Ann. not required for DBA or for EOPs	R1
		Loss of Inputs to TRS-E11-1R601	None	YES	Indicator not required for DBA or for EOPs Provides Indication Only	RJ
	Short Cables (All cables	Loss of Conductivity Indication (CISH-E11-1R001B)	None	YES	Indicator not required for DBA or for EOPs Provides Indication Only	R1
		Loss of Conductivity Ann Input (CISH-E11-1R001B)	None	YES	Ann. not required for DBA or for EOPs Ann. Only	RJ
		Trip 1Y226 Circuit Breaker 24. Loss of CI-E11-1R006	None	YES	No Class 1E circuits connected to 1Y226-24	

SAFETY FUNCTION: MAINTAIN CLASS 1E POWER SUPPLY 1Y226
NON CLASS 1E COMPONENTS: CISH-E11-1R001B

COMPONENT ID	FAILURE MODE	LOCAL EFFECTS INCLUDING DEPENDENT FAILURES	SYSTEM EFFECTS	SINGLE FAILURE MET	REMARKS	
CABLES in same raceways as cable to Non Class 1E Component	Short cables to Pressure Boundary instr classified as Q	Loss of Non Class 1E Instrument Loops.	None	Yes	Pressure Boundary maintained (See Appendix K)	
		Loss of Inputs to TRS-E11-1R601	None	YES	Indicator not required for DBA or for EOPs Provides Indication Only	R1
	Impressed Voltage (All cables)	Loss of conductivity Indicat. (CISH-E11-1R001B) (CI-E11-1R006)	None	YES	Indicator not required for DBA or for EOPs Provides Indication Only	R1
		Loss of Conductivity Ann Input (CISH-E11-1R001B)	None	YES	Ann. not required for DBA or for EOPs Ann. Only	R1
		Loss of CE-E11-1N001B (See IOM 311-1 Tab 19)	None	YES	Boundary Maintained	
		Loss of Inputs to TRS-E11-1R601	None	YES	Indicator not required for DBA or for EOPs Provides Indication Only	R1
	Impressed voltage on cables to Pressure Boundary instrument instr classified as Q	Loss of Non Class 1E Instrument Loops.	None	Yes	Pressure Boundary maintained (See Appendix K)	

References:
J-451 Sh 18
M1-E11-66 (14)
E-15 Sh 3
IOM 311-1
EC-017-1011

CATEGORY
4

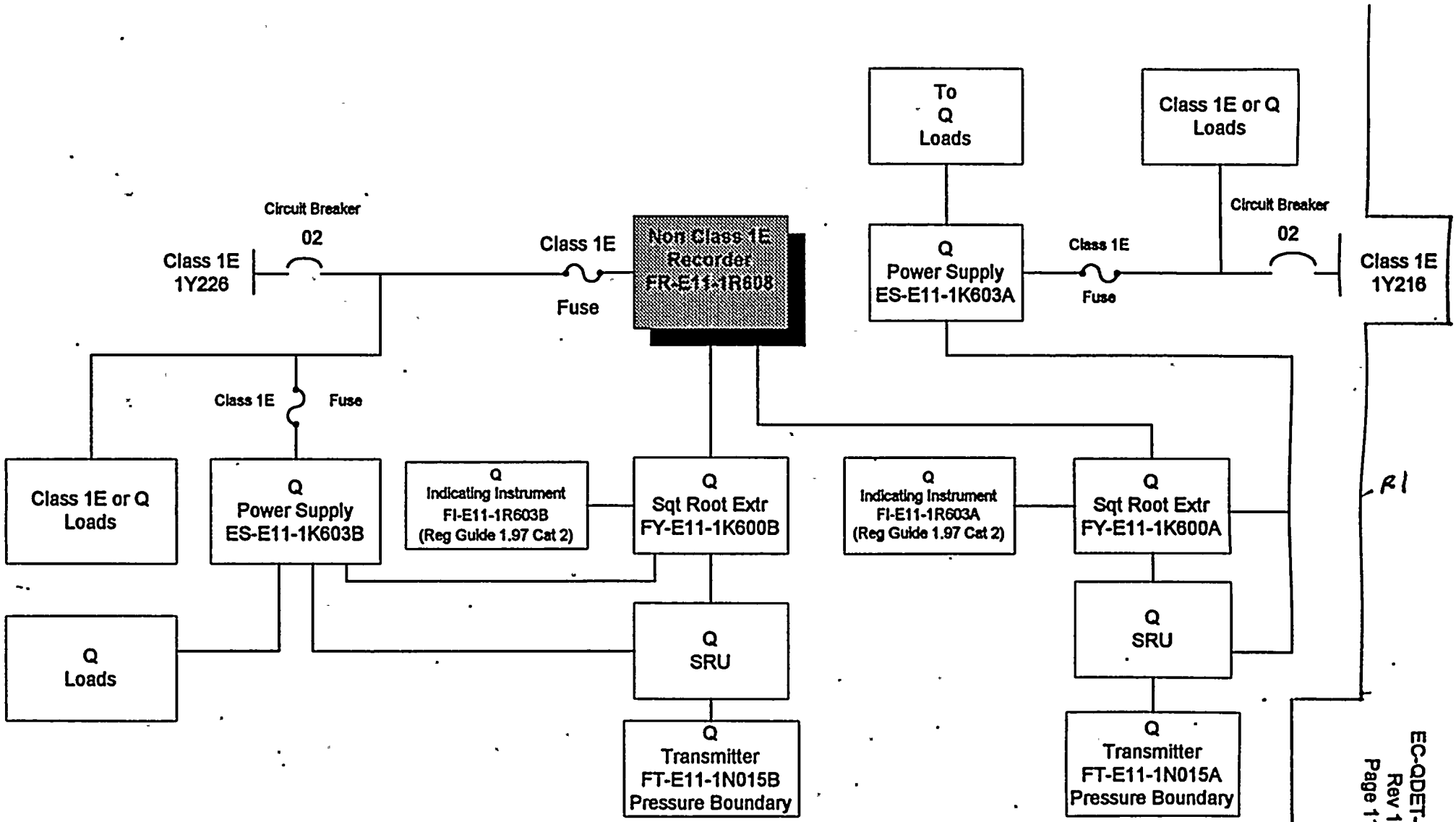

GE1CAT43.VSD

SAFETY FUNCTION: RHR A & B FLOW INDICATION (REG GUIDE 1.97), Maintain Class 1E Power Supply 1Y226 and 1Y216
NON CLASS 1E COMPONENT(S): FR-E11-1R608

COMPONENT ID	FAILURE MODE	LOCAL EFFECTS INCLUDING DEPENDENT FAILURES	SYSTEM EFFECTS	SINGLE FAILURE MET	REMARKS	
FR-E11-1R608 Flow Recorder (NonClass 1E	Open Recorder	Loss of RHR Flow Recorder	None	YES	Recorder not required for DBA or for EOPs Provides Indication Only	R1
	Short Recorder	Loss of RHR Flow Recorder	None	YES	Recorder not required for DBA or for EOPs Provides Indication Only No Class 1E lost. Branch fuses clears fault before Class 1E Ckt Bkr trips (FSAR 8.1.6.1q5 Isolation Method iii)	R1
		Loss of RHR A Flow Indication (FI-E11-1R603A)	None	YES	FI-E11-1R603A is Reg Guide 1.97 Cat 2 which does not require redundancy (RHR A)	
		Loss of RHR B Flow Indication (FI-E11-1R603B)	None	YES	FI-E11-1R603B is Reg Guide 1.97 Cat 2 which does not require redundancy (RHR B)	
	Impressed Voltage Fault on Panel Wire	Loss of RHR A Flow Indication (FI-E11-1R603A)	None	YES	FI-E11-1R603A is Reg Guide 1.97 Cat 2 which does not require redundancy (RHR A)	

SAFETY FUNCTION: RHR A & B FLOW INDICATION (REG GUIDE 1.97), Maintain Class 1E Power Supply 1Y226 and 1Y216
NON CLASS 1E COMPONENT(S): FR-E11-1R608

COMPONENT ID	FAILURE MODE	LOCAL EFFECTS INCLUDING DEPENDENT FAILURES	SYSTEM EFFECTS	SINGLE FAILURE MET	REMARKS	
FR-E11-1R608 Flow Recorder (NonClass 1E	Impressed Voltage Fault on Panel Wire	Loss of RHR B Flow Indication (FI-E11-1R603B)	None	YES	FI-E11-1R603B is Reg Guide 1.97 Cat 2 which does not require redundancy (RHR B)	
		Loss of RHR Flow Recorder	None	YES	Recorder not required for DBA or for EOPs Provides Indication Only No Class 1E lost. Fuses clears before before Class 1E Ckt Bkr trips (FSAR 8.1.6.1q5 Isolation Method iii)	R1
		Loss of Power Supply ES-E11-1R603B Loads:	None	YES	No Class 1E lost. Fuses clears before before Class 1E Ckt Bkr trips (FSAR 8.1.6.1q5 Isolation Method iii)	
		FI-E11-1R603B - Loss of LOOP B Flow Indication	None	YES	FI-E11-1R603A is Reg Guide 1.97 Cat 2 which does not require redundancy	
		PI-E11-1R606B1 - Loss of RHR Hx B Inlet Press Ind	None	YES	Indication not required for DBA or for EOPs Provides Indication only	R1

SAFETY FUNCTION: RHR A & B FLOW INDICATION (REG GUIDE 1.97), Maintain Class 1E Power Supply 1Y226 and 1Y216
NON CLASS 1E COMPONENT(S): FR-E11-1R608

COMPONENT ID	FAILURE MODE	LOCAL EFFECTS INCLUDING DEPENDENT FAILURES	SYSTEM EFFECTS	SINGLE FAILURE MET	REMARKS
FR-E11-1R608 Flow Recorder (NonClass 1E	Impressed Voltage Fault on Panel Wire	Loss of FT-E11-1N015B Electronics	None	YES	Pressure Boundary Maintained (See Appenx K)
		Loss of PT-E11-1N026B	None	YES	Pressure Boundary Maintained (See Appenx K)
		Loss of Power Supply ES-E11-1R603A Loads:	None	YES	No Class 1E lost. Fuses clears before before Class 1E Ckt Bkr trips (FSAR 8.1.6.1q5 Isolation Method iii)
		FI-E11-1R603A - Loss of LOOP A Flow Indication	None	YES	FI-E11-1R603A is Reg Guide 1.97 Cat 2 which does not require redundancy
		PI-E11-1R606A1 - Loss of RHR Hx A Inlet Press Ind	None	YES	Indication not required for DBA or for EOPs Provides Indication only R1
		FI-E11-1R602A - Loss of RHR Sw Flow Indication	None	YES	Indication not required for DBA or for EOPs Provides Indication only R1

SFETY FUNCTION: RHR A & B FLOW INDICATION (REG GUIDE 1.97), Maintain Class 1E Power Supply 1Y226 and 1Y216
NON CLASS 1E COMPONENT(S): FR-E11-1R608

COMPONENT ID	FAILURE MODE	LOCAL EFFECTS INCLUDING DEPENDENT FAILURES	SYSTEM EFFECTS	SINGLE FAILURE MET	REMARKS
FR-E11-1R608 Flow Recorder (NonClass 1E	Impressed Voltage Fault on Panel Wire	Loss of FT-E11-1N015A Electronics	None	YES	Pressure Boundary Maintained (See Appendix K)
		Loss of PT-E11-1N026A Electronics	None	YES	Pressure Boundary Maintained (See Appendix K)
		Loss of FT-E11-1N007A Electronics	None	YES	Pressure Boundary Maintained (See Appendix K)

References:

J-451 SH 9 J-451 SH 11
M1-E11-66 SH 14 J-451 SH.13

APPENDIX E

SINGLE FAILURE ANALYSIS FOR CATEGORY 5 GE SUPPLIED NON CLASS 1E INSTRUMENTS CONNECTED TO Q CLASSIFIED INSTRUMENTS

CATEGORY 5

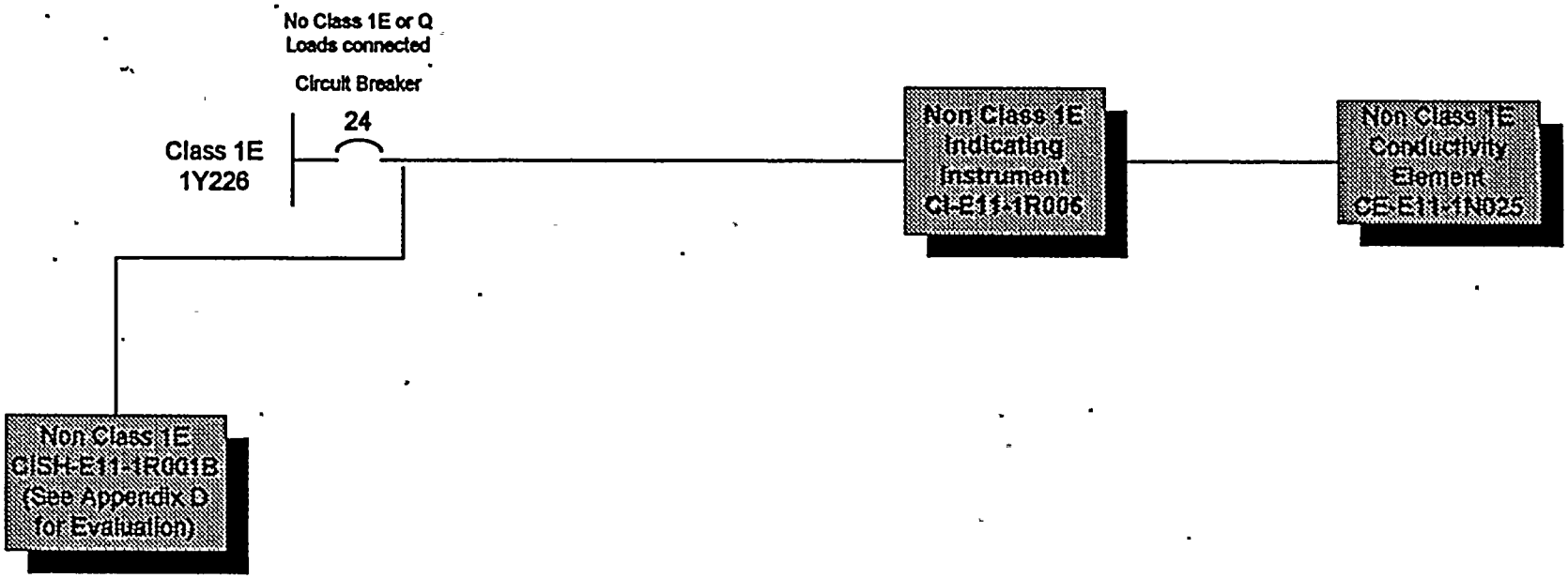

R1

GE1CAT51.VSD

SAFETY FUNCTION: MAINTAIN CLASS 1E POWER SUPPLY 1Y226
NON CLASS 1E COMPONENTS: CE-E11-1N025; CI-E11-1R006

COMPONENT ID	FAILURE MODE	LOCAL EFFECTS INCLUDING DEPENDENT FAILURES	SYSTEM EFFECTS	SINGLE FAILURE MET	REMARKS	
CE-E11-1N025 Conductivity Element (Non Class 1E)	Open Element	Loss of Conductivity Indication (CI-E11-1R006)	None	YES	Indicator not required for DBA or for EOPs Provides Indication Only	R1
	Short Element	Loss of Conductivity Indication (CI-E11-1R006)	None	YES	Indicator not required for DBA or for EOPs Provides Indication Only	R1
CI-E11-1R006 Conductivity Indicating Meter (Non Class 1E)	Open Indicator	Loss of Conductivity Indication (CI-E11-1R006)	None	YES	Indicator not required for DBA or for EOPs Provides Indication Only	R1
	Short Indicator	Loss of Conductivity Indication (CI-E11-1R006)	None	YES	Indicator not required for DBA or for EOPs Provides Indication Only	R1
		Trip 1226 Circuit Breaker 24	None	YES	No Class 1E circuits connected to 1Y226-24	
		Loss of Conductivity Indication (CISH-E11-1R001B)	None	YES	Indicator not required for DBA or for EOPs Provides Indication Only	R1

SAFETY FUNCTION: MAINTAIN CLASS 1E POWER SUPPLY 1Y226
NON CLASS 1E COMPONENTS: CE-E11-1N025; CI-E11-1R006

COMPONENT ID	FAILURE MODE	LOCAL EFFECTS INCLUDING DEPENDENT FAILURES	SYSTEM EFFECTS	SINGLE FAILURE MET	REMARKS	
CABLES in same raceways as cable to Non Class 1E Component CI-E11-1R006	Open Cables	Loss of Conductivity Indication (CI-E11-1R006)	None	YES	Indicator not required for DBA or for EOPs Provides Indication Only	R1
	Open cables to transducers classified as Q	Loss of:				
		Computer Inputs	None	YES	Computer not required for DBA or for EOPs	R1
		XI-00019A XI-00024A XI-00028A XI-00032A	None	YES	These are Non Class 1E meters used for Reg Guide 1.97 Cat. 2	
		XI-00032B XI-00032C XI-00032D			Reg Guide 1.97 Cat. 2 instruments do not require redundancy	
	Open cables to Pressure Boundary instruments classified as Q	Loss of Non Class 1E Instrument Loops	None	YES	Non Class 1E Loops not required for DBA or for EOPs Presuure Boundary Maintained (See Appendix K)	R1
	Open Thermocouple cables to safety related Hydrogen Recombiners	Loss of Hydrogen Recombiner Temperature Indication	None	YES	Indication not required for DBA or for EOPs Provides Indication Only (See Appendix K)	R1

SAFETY FUNCTION: MAINTAIN CLASS 1E POWER SUPPLY 1Y226
NON CLASS 1E COMPONENTS: CE-E11-1N025; CI-E11-1R006

COMPONENT ID	FAILURE MODE	LOCAL EFFECTS INCLUDING DEPENDENT FAILURES	SYSTEM EFFECTS	SINGLE FAILURE MET	REMARKS	
CABLES in same raceways as cable to Non Class 1E Component CI-E11-1R006	Short Cables	Loss of Conductivity Indication (CI-E11-1R006)	None	YES	Indicator not required for DBA or for EOPs Provides Indication Only	RI
	Short cables to transducers classified as Q	Loss of:				
		Computer Inputs	None	YES	Computer not required for DBA or for EOPs	RI
		XI-00019A XI-00024A XI-00028A XI-00032A	None	YES	These are Non Class 1E meters used for Reg Guide 1.97 Cat. 2	
		XI-00032B XI-00032C XI-00032D			Reg Guide 1.97 Cat. 2 instruments do not require redundancy	
	Short cables to Pressure Boundary instruments classified as Q	Loss of Non Class 1E Instrument Loops	None	YES	Non Class 1E Loops not required for DBA or for EOPs Presuure Boundary Maintained (See Appendix K)	RI
	Short Thermocouple cables to safety related Hydrogen Recombiners	Loss of Hydrogen Recombiner Temperature Indication	None	YES	Indication not required for DBA or for EOPs Provides Indication Only (See Appendix K)	RI

SAFETY FUNCTION: MAINTAIN CLASS 1E POWER SUPPLY 1Y226
NON CLASS 1E COMPONENTS: CE-E11-1N025; CI-E11-1R006

COMPONENT ID	FAILURE MODE	LOCAL EFFECTS INCLUDING DEPENDENT FAILURES	SYSTEM EFFECTS	SINGLE FAILURE MET	REMARKS	
CABLES in same raceways as cable to Non Class 1E Component CI-E11-1R006	Impressed Voltage Faults	Incorrect/Loss of Conductivity Indication (CI-E11-1R006)	None	YES	Indicator not required for DBA or for EOPs Provides Indication Only	R1
		Loss of CE-E11-1N025 (See IOM 311-1 Tab 19)	None	YES	Boundary Maintained	
		Trip 1226 Circuit Breaker 24	None	YES	No Class 1E circuits connected to 1Y226-24	
		Incorrect/Loss of Conductivity Indication (CISH-E11-1R001B)	None	YES	Indicator not required for DBA or for EOPs Provides Indication Only	R1
		Loss of CE-E11-1N001B (See IOM 311-1 Tab 19)	None	YES	Boundary Maintained	
	Impressed Voltage Fault on cables to transducers classified as Q	Loss of: Computer Inputs	None	YES	Computer not required for DBA or for EOPs Impressed voltage does not propagate to input of transducers (See Appendix K)	R1

SAFETY FUNCTION: MAINTAIN CLASS 1E POWER SUPPLY 1Y226
NON CLASS 1E COMPONENTS: CE-E11-1N025; CI-E11-1R006

COMPONENT ID	FAILURE MODE	LOCAL EFFECTS INCLUDING DEPENDENT FAILURES	SYSTEM EFFECTS	SINGLE FAILURE MET	REMARKS
CABLES in same raceways as cable to Non Class 1E Component CI-E11-1R006	Impressed Voltage Fault on cables to transducers classified as Q	Loss of: XI-00019A XI-00024A XI-00028A XI-00032A XI-00032B XI-00032C XI-00032D	None	YES	These are Non Class 1E meters used for Reg Guide 1.97 Cat. 2 Reg Guide 1.97 Cat. 2 instruments do not require redundancy
	Impressed Voltage Faults on cables to Pressure Boundary instruments classified as Q	Loss of Non Class 1E Instrument Loops	None	YES	Non Class 1E Loops not required for DBA for EOPs Presuure Boundary Maintained (See Appendix K)
	Impressed Voltage on Thermocouples cables to safety related Hydrogen Recombers	Loss of Hydrogen Recombiner Temperature Indication	None	YES	Indication not required for DBA or for EOPs Provides Indication Only (See Appendix K)

References:

J-451 Sh 18
M1-E11-66 (14)
E-15 Sh 7

IOM 311-1
EC-017-1011

CATEGORY 5

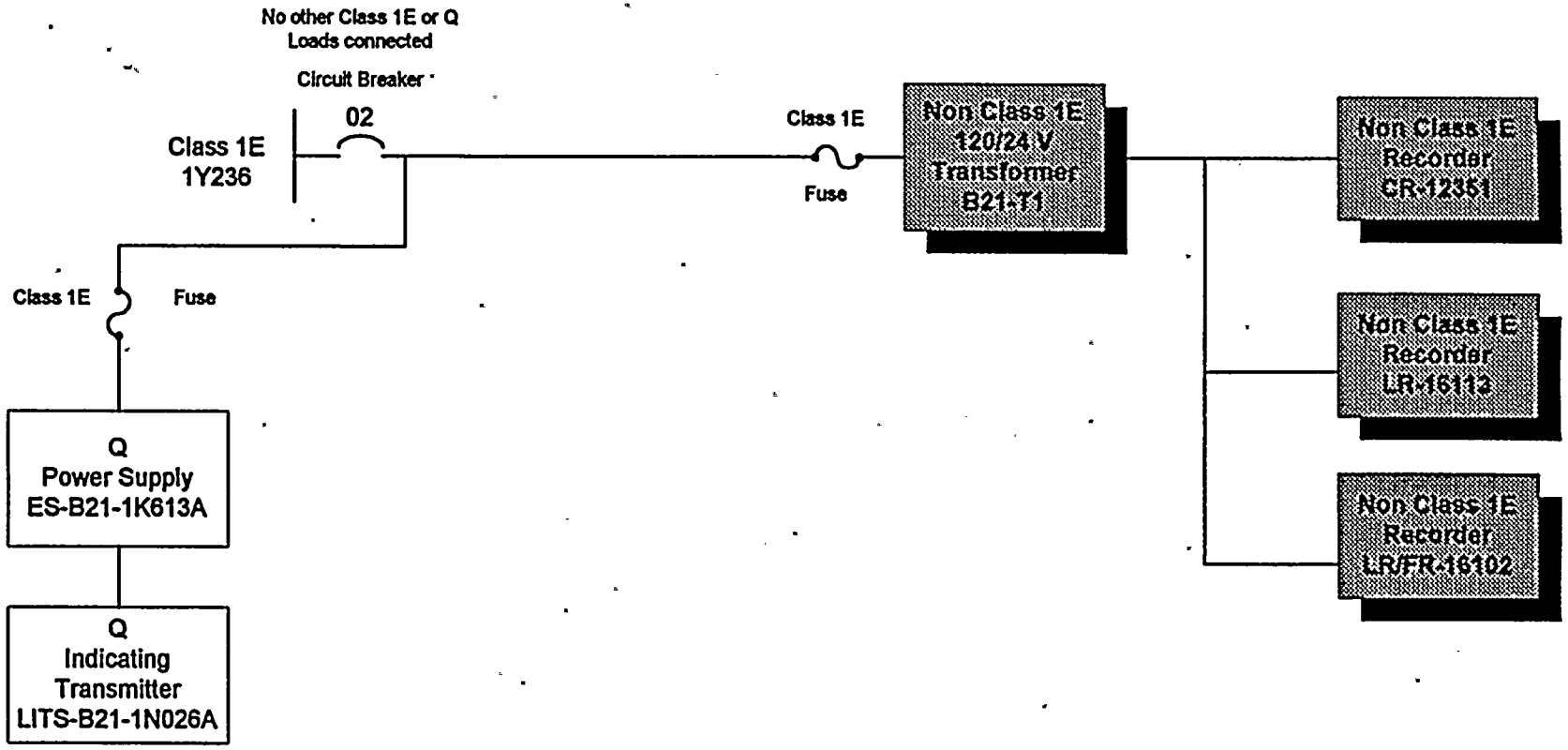

R1

GE1CAT52.VSD

SAFETY FUNCTION: CLASS 1E POWER SUPPLY (1Y236-02)
NON CLASS 1E COMPONENT(S); CR-12351, LR-16113, LR/FR-16102

COMPONENT ID	FAILURE MODE	LOCAL EFFECTS INCLUDING DEPENDENT FAILURES	SYSTEM EFFECTS	SINGLE FAILURE MET	REMARKS	
CR-12351 (Non Class 1E)	Open Recorder	Loss of Recorder	None	YES	Recorder not required for DBA or for EOPs Provides Indication Only	R1
	Short Recorder	Loss of Recorder	None	YES	Recorder not required for DBA or for EOPs Provides Indication Only No Class 1E lost. Branch fuse clears fault before Class 1E Ckt Bkr trips	R1
LR-16113 (Non Class 1E)	Open Recorder	Loss of Recorder	None	YES	Recorder not required for DBA or for EOPs Provides Indication Only	R1
	Short Recorder	Loss of Recorder	None	YES	Recorder not required for DBA or for EOPs Provides Indication Only No Class 1E lost. Branch fuse clears fault before Class 1E Ckt Bkr trips	R1

SAFETY FUNCTION: CLASS 1E POWER SUPPLY (1Y236-02)
NON CLASS 1E COMPONENT(S); CR-12351, LR-16113, LR/FR-16102

COMPONENT ID	FAILURE MODE	LOCAL EFFECTS INCLUDING DEPENDENT FAILURES	SYSTEM EFFECTS	SINGLE FAILURE MET	REMARKS
LR/FR-16102 (Non Class 1E)	Open Recorder	Loss of Recorder	None	YES	Recorder not required for DBA or for EOPs Provides Indication Only
	Short Recorder	Loss of Recorder	None	YES	Recorder not required for DBA or for EOPs Provides Indication Only No Class 1E lost. Branch fuse clears fault before Class 1E Ckt Bkr trips

RI

RI

References:

J-461 Sh 2	E-1012	J-423 Sh 3
EC-069-1007		J-461 Sh 4
FSAR 8.1.6		M1-B21-131(6)

CATEGORY 5

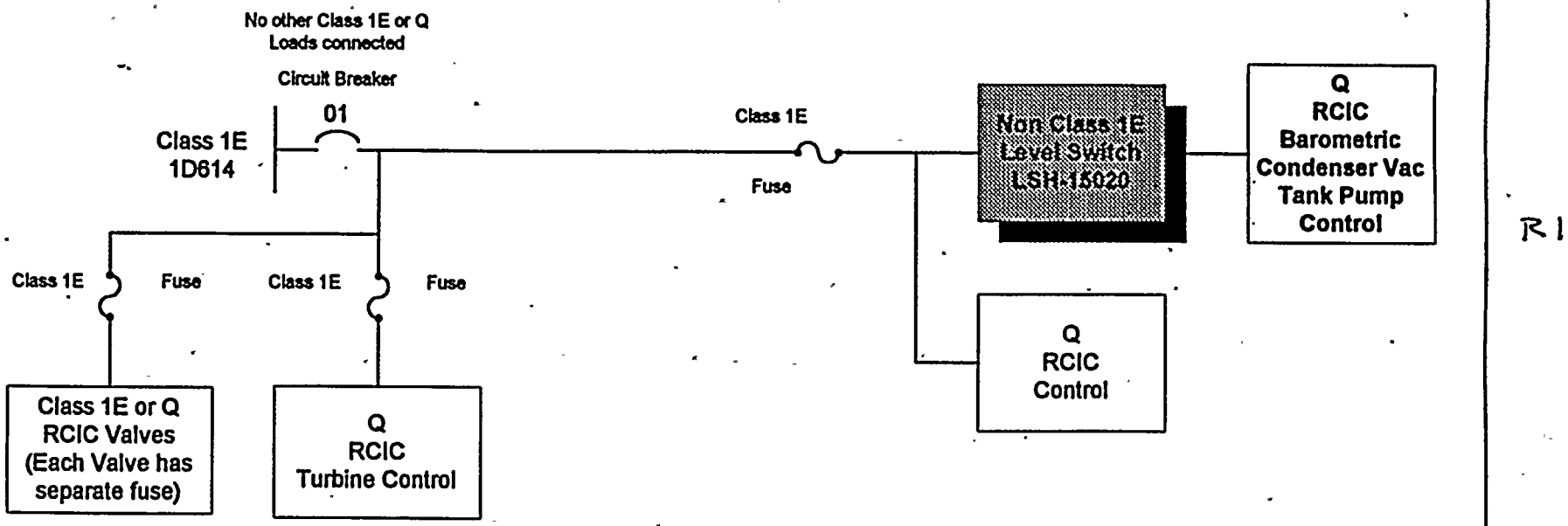

R 1

GE1CAT53.VSD

SAFETY FUNCTION: MAINTAIN CLASS 1E POWER SUPPLY 1D614
NON CLASS 1E COMPONENT(S): LSH-15020

COMPONENT ID	FAILURE MODE	LOCAL EFFECTS INCLUDING DEPENDENT FAILURES	SYSTEM EFFECTS	SINGLE FAILURE MET	REMARKS
LSH-15020 (Level Switch (Non Class 1E)	Open Switch	No Initiation of RCIC Barometric Condenser Vacuum Tank Condensate Pump; Loss of RCIC	None	YES	RCIC not required for DBA HPCI and ADS available
	Short Switch	Spurious Initiation of RCIC Barometric Condenser Vacuum Tank Condensate Pump	None	YES	RCIC not required for DBA HPCI and ADS available
CABLES in same raceways as cables to Non Class 1E Component	Open cables (All cables)	No Initiation of RCIC Barometric Condenser Vacuum Tank Condensate Pump; Loss of RCIC	None	YES	RCIC not required for DBA HPCI and ADS available
		Loss of Division I	None	YES	Division II available No Div II, Div II Aff or GE Div II/Non Sep associated cables in raceways
	Short cables (All cables)	Spurious Initiation of RCIC Barometric Condenser Vacuum Tank Condensate Pump	None	YES	RCIC not required for DBA HPCI and ADS available
		Loss of Division I	None	YES	Division II available No Div II, Div II Aff or GE Div II/Non Sep associated cables in raceways

SAFETY FUNCTION: MAINTAIN CLASS 1E POWER SUPPLY 1D614
NON CLASS 1E COMPONENT(S): LSH-15020

COMPONENT ID	FAILURE MODE	LOCAL EFFECTS INCLUDING DEPENDENT FAILURES	SYSTEM EFFECTS	SINGLE FAILURE MET	REMARKS
CABLES in same raceways as cables to Non Class 1E Component	Impressed voltage fault (All cables)	No Initiation of RCIC Barometric Condenser Vacuum Tank Condensate Pump; Loss of RCIC	None	YES	RCIC not required for DBA HPCI and ADS available
		or			
		Spurious Initiation of RCIC & RCIC Barometric Condenser Vacuum Tank Condensate Pump	None	YES	RCIC not required for DBA HPCI and ADS available
		Loss of Division I	None	YES	Division II available No Div II, Div II Aff or GE Div II/Non Sep associated cables in raceways
		Loss of RCIC Control	None	YES	RCIC not required for DBA HPCI and ADS available

References:

M1-E51-90 SH 4
EC-QDET-1001

CATEGORY
5

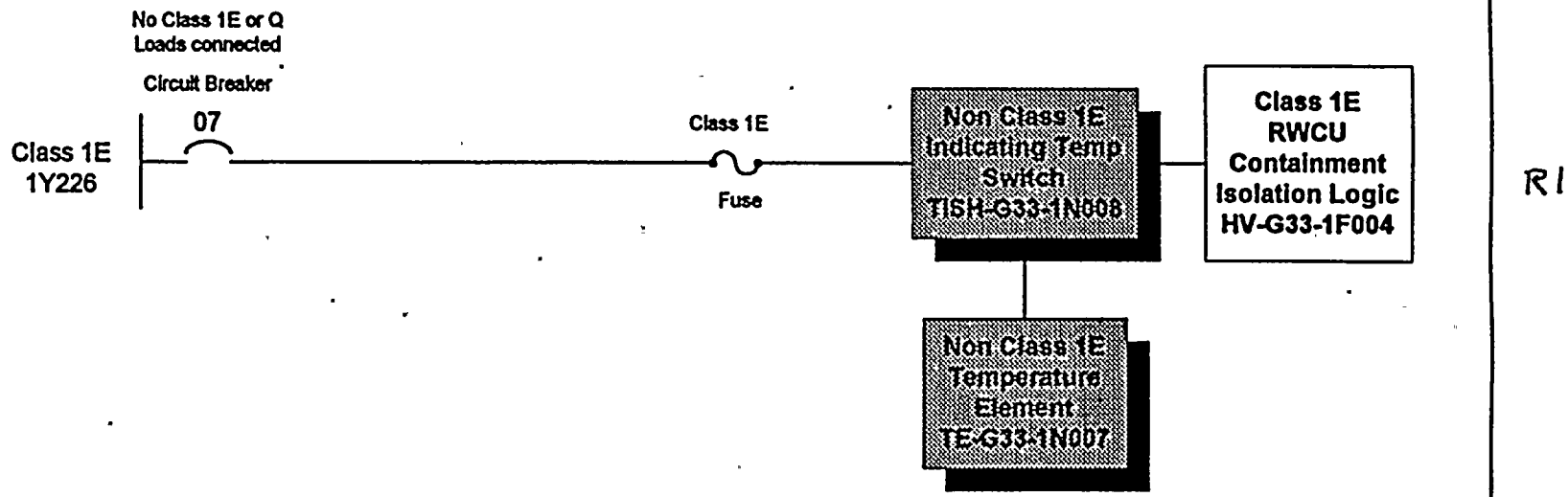

GE1CAT54.VSD

SAFETY FUNCTION: MAINTAIN CLASS 1E POWER SUPPLY (1Y226-07)
NON CLASS 1E COMPONENT(S): TISH-G33-1N008, TE-G33-1N007

COMPONENT ID	FAILURE MODE	LOCAL EFFECTS INCLUDING DEPENDENT FAILURES	SYSTEM EFFECTS	SINGLE FAILURE MET	REMARKS	
TE-G33-1N007 TISH-G33-1N008 (Non Class 1E)	Open Element Open Indicator	Loss of Indicating Switch	None	YES	Indication not required for DBA or for EOPs	R1
		No Intiation signal to valve HV-G33-1F004 for RWCU Hx Hi Temp	None	YES	This process isolation signal is to protect resins. Signal not required for DBA	
	Short Element	Spurious initiation signal to valve for RWCU Hx Hi temp	Spurious closing of HV-G33-1F004	YES	Fails in safe direction	R1
	Short Indicator	Loss of Indication TISH-G33-1N008			Not required for DBA or for EOPs No Class 1E lost. Branch fuse or 120 V Ckt Bkr clears before MCC Ckt Bkr trips	R1
CABLES in same raceways as cables to Non Class 1E Component TE-G33-1N007	Open cables	Loss of Indication TISH-G33-1N008	None	YES	Indication not required for DBA or for EOPs	R1
		No Intiation signal to valve HV-G33-1F004 for RWCU Hx Hi Temp	None	YES	This process isolation signal is to protect resins. Signal not required for DBA	
		Loss of Division II	None	YES	Division I available No Div I, Div I Aff or GE Div I/Non Sep associated cables in raceways	

SAFETY FUNCTION: MAINTAIN CLASS 1E POWER SUPPLY (1Y226-07)
NON CLASS 1E COMPONENT(S): TISH-G33-1N008, TE-G33-1N007

COMPONENT ID	FAILURE MODE	LOCAL EFFECTS INCLUDING DEPENDENT FAILURES	SYSTEM EFFECTS	SINGLE FAILURE MET	REMARKS	
CABLES in same raceways as cables to Non Class 1E Component TE-G33-1N007	Short cables	Spurious initiation signal to HV-G33-1F004 for RWCU Hx Hi Temp	Spurious closing of HV-G33-1F004	YES	Fails in safe direction	R1
		Loss of Indicating Switch	None	YES	Indication not required for DBA or for EOPs	R1
		Loss of Division II	None	YES	Division I available No Div I, Div I Aff or GE Div I/Non Sep associated cables in raceways	
	Impressed Voltage fault	Loss of Indication TISH-G33-1N008			Not required for DBA or for EOPs No Class 1E lost. Branch fuse or 120 V Ckt Bkr clears before MCC Ckt Bkr trips	R1
		Loss of Division II	None	YES	Division I available No Div I, Div I Aff or GE Div I/Non Sep associated cables in raceways	
		Spurious initiation signal to HV-G33-1F004 for RWCU Hx Hi Temp	Spurious closing of HV-G33-1F004	YES	Fails in safe direction	R1

References:
J-444 Sh 6 E-1012 FSAR 8.1.6 EC-017-1015

CATEGORY
5

No Common Mode
Failure Mechanism
for TR-E41-1R605
(Recorder is located in .
mild envirnoment & has
Seismic Qualification)

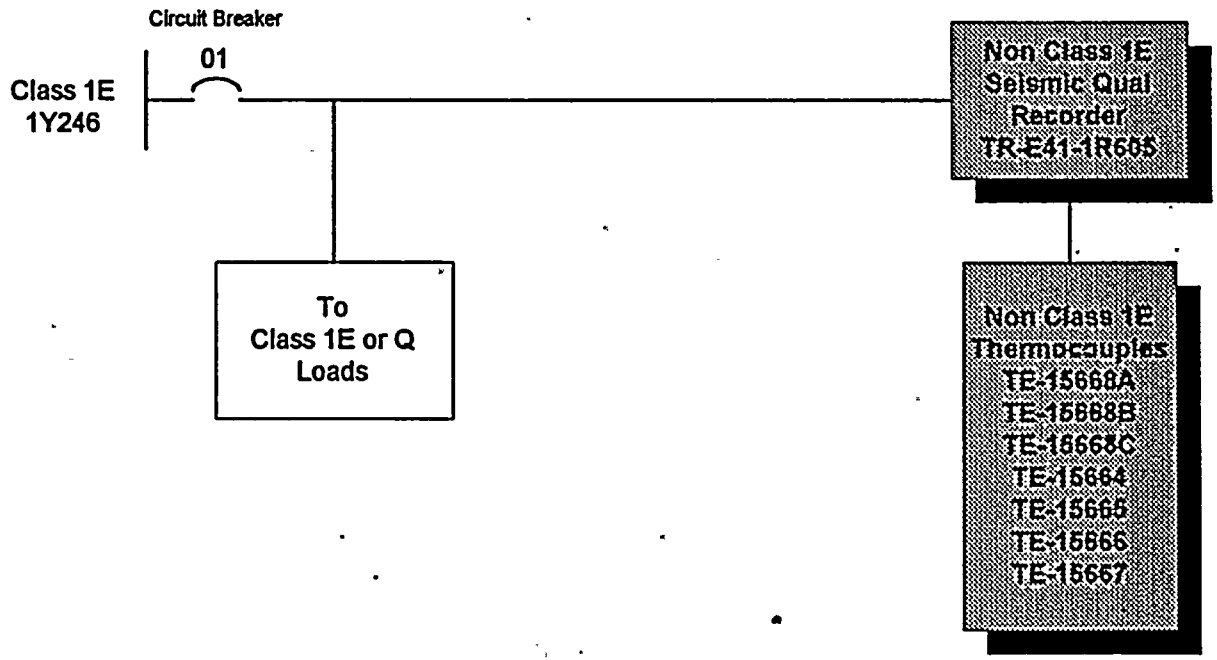

EC-QDET-1002
Rev 1
134a

GE1CAT5S.VSD

SAFETY FUNCTION: CLASS 1E POWER SUPPLY (1Y246-01)
NON CLASS 1E COMPONENT(S): TRS-E41-1R605

COMPONENT ID	FAILURE MODE	LOCAL EFFECTS INCLUDING DEPENDENT FAILURES	SYSTEM EFFECTS	SINGLE FAILURE MET	REMARKS
TRS-E41-1R605 Temperature Recorder (Non Class 1E)	Open Recorder	Loss of Temp Recorder Reading; No Alarm	None	Yes	Recorder/Alarm not required for DBA or for EOPs [R1]
	Short Recorder	Loss of Temp Recorder Reading; No Alarm	None	Yes	Recorder/Alarm not required for DBA or for EOPs [R1] Fuse opens at recorder before Class 1E Circuit Breaker opens. No Class 1E circuits connected to fuse (FSAR 8.1.6.1q5 Isolation Method iii)
References: J-456 SH 2 M1-E41-69 SH 3 E-1012					

APPENDIX F

SINGLE FAILURE ANALYSIS FOR CATEGORY 6 GE SUPPLIED NON CLASS 1E INSTRUMENTS CONNECTED TO Q CLASSIFIED INSTRUMENTS

CATEGORY 6

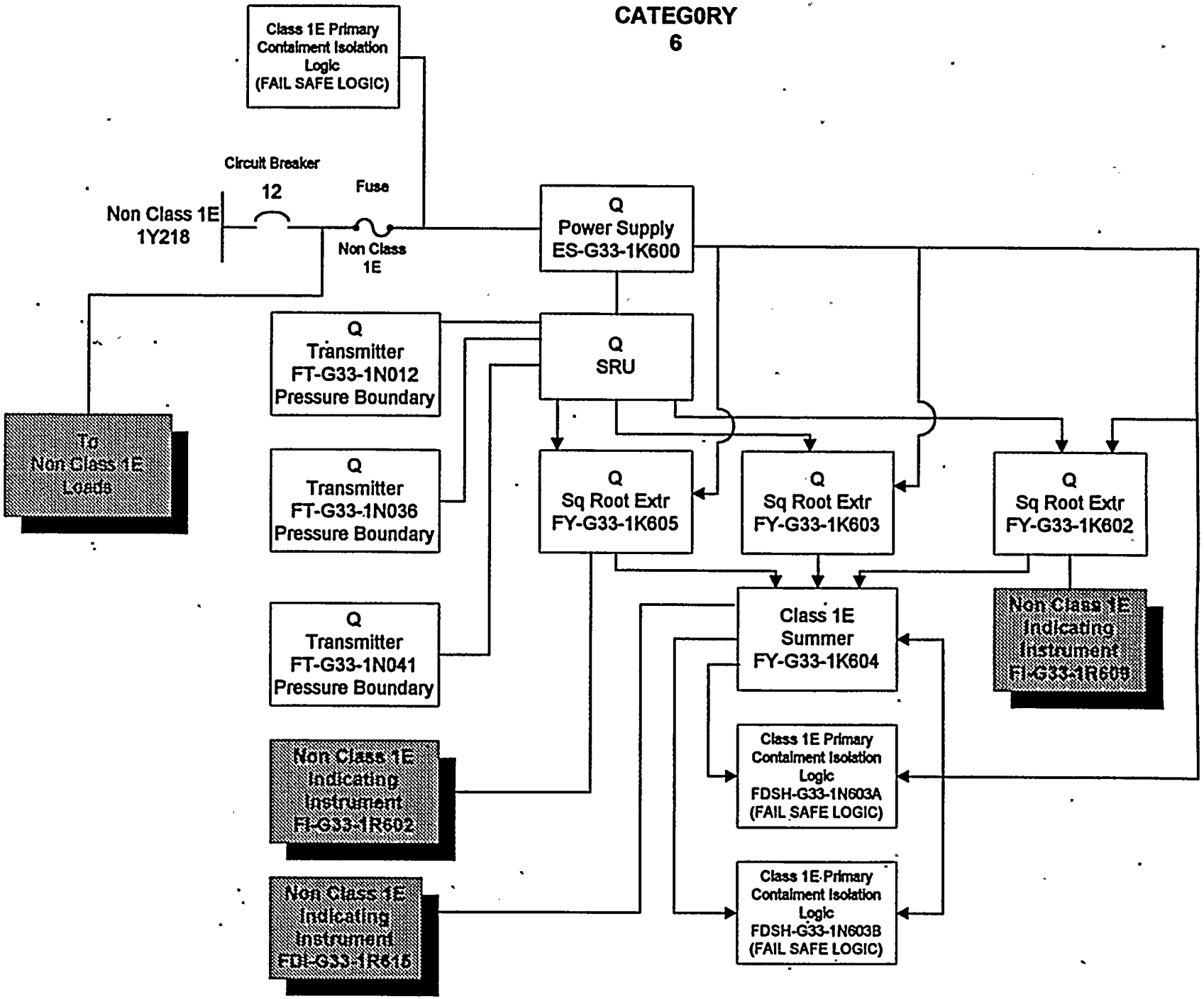

R1

GE1CAT61.VSD

SAFETY FUNCTION: RWCU PRIMARY CONTAINMENT ISOLATION
NON CLASS 1E COMPONENT(S); FI-G33-1R602, FI-G33-1R609, FDI-G33-1R615, 1Y218-12

COMPONENT ID	FAILURE MODE	LOCAL EFFECTS INCLUDING DEPENDENT FAILURES	SYSTEM EFFECTS	SINGLE FAILURE MET	REMARKS	
FI-G33-1R602 (Non Class 1E)	Open Indicator	Loss of Indication	None	YES	Indication not required for DBA or for EOPs Provides Indication only	R1
	Short Indicator	Loss of Indication	None	YES	Indication not required for DBA or for EOPs Provides Indication only	R1
		Loss of FY-G33-1K605	**RWCU Primary Containment Isolation Valves Close**	YES	Fails in safe direction	
FI-G33-1R609 (Non Class 1E	Open Indicator	Loss of Indication	None	YES	Indication not required for DBA or for EOPs Provides Indication only	R1
	Short Indicator	Loss of Indication	None	YES	Indication not required for DBA or for EOPs Provides Indication only	R1
		Loss of FY-G33-1K604	**RWCU Primary Containment Isolation Valves Close**	YES	Fails in safe direction	
FDI-G33-1R615 (Non Class 1E)	Open Indicator	Loss of Indication	None	YES	Indication not required for DBA or for EOPs Provides Indication only	R1

SAFETY FUNCTION: RWCU PRIMARY CONTAINMENT ISOLATION
NON CLASS 1E COMPONENT(S); FI-G33-1R602, FI-G33-1R609, FDI-G33-1R615, 1Y218-12

COMPONENT ID	FAILURE MODE	LOCAL EFFECTS INCLUDING DEPENDENT FAILURES	SYSTEM EFFECTS	SINGLE FAILURE MET	REMARKS
FDI-G33-1R615 (Non Class 1E)	Short Indicator	Loss of Indication	None	YES	Indication not required for DBA or for EOPs Provides Indication only
		Loss of FDSH-G33-1N603A, FDSH-G33-1N603B	RWCU Primary Containment Isolation Valves Close	YES	Fails in safe direction
ES-G33-1K600 Power Supply or 1Y218-12 (Non Class 1E)	Open Power Supply	Loss of output from all: FT-G33-1N012 FT-G33-1N036 FT-G33-1N041	Prevent closing RWCU Containment Isolation Valves for Leak Detection	YES	Div I & Div II Room High Temp avail. to close RWCU Primary Iso Valves
		Loss of output: FY-G33-1K605 FY-G33-1K602 FY-G33-1K603 FY-G33-1K604 FDSH-G33-1N603A, B	RWCU Primary Containment Isolation Valves Close	YES	Fails in safe direction
	Short Non Class 1E Power Supply	Loss of output: FY-G33-1K605 FY-G33-1K602 FY-G33-1K603 FY-G33-1K604 FDSH-G33-1N603A, B	RWCU Primary Containment Isolation Valves Close	YES	Fails in safe direction

R1

SAFETY FUNCTION: RWCU PRIMARY CONTAINMENT ISOLATION
NON CLASS 1E COMPONENT(S); FI-G33-1R602, FI-G33-1R609, FDI-G33-1R615, 1Y218-12

COMPONENT ID	FAILURE MODE	LOCAL EFFECTS INCLUDING DEPENDENT FAILURES	SYSTEM EFFECTS	SINGLE FAILURE MET	REMARKS	
ES-G33-1K600 Power Supply (1Y218-12)	Short Non Class 1E Power Supply	Loss of output from all: FT-G33-1N012 FT-G33-1N036 FT-G33-1N041	**Prevent closing RWCU Containment Isolation Valves for Leak Detection**	YES	Div I & Div II Room High Temp avail. to close RWCU Primary Iso Valves	
CABLES in same raceways as cables to Non Class 1E Component	Open cables	Loss of FI-G33-1R602 & FI-G33-1R609	None	YES	Indication not required for DBA or for EOPs Provides Indication only	R1
		Loss of Division I	None	YES	Division II available No Div II, Div II Aff or GE Div II/Non Sep associated cables in raceways except NM0I1202F,G	
	Open cables NM0I1202F,G (DivII Aff)	Loss of FR-01204A			Recorder not required for DBA or for EOPs Provides Indication only	R1
	Open cables to transducers classified as Q	Loss of Computer Inputs	None	YES	Computer not required for DBA or for EOPs Provides Indication Only	R1
	Open cables to Pressure Boundary instruments classified as Q	Loss of Non Class 1E Instrument Loops	None	YES	Non Class 1E Loops not required for DBA or for EOPs Boundaries Maintained (See Appendix K)	
	Open cables to Neutron Mon. Sys classified as Q	Loss of IRM Sel Sw A,B,C,D, E,F,H. IRM Channels Trip	Neutron Flux SCRAM	YES	Fails in safe direction	R1

SAFETY FUNCTION: RWCU PRIMARY CONTAINMENT ISOLATION
NON CLASS 1E COMPONENT(S); FI-G33-1R602, FI-G33-1R609, FDI-G33-1R615, 1Y218-12

COMPONENT ID	FAILURE MODE	LOCAL EFFECTS INCLUDING DEPENDENT FAILURES	SYSTEM EFFECTS	SINGLE FAILURE MET	REMARKS	
CABLES in same raceways as cables to Non Class 1E Component	Short Cables	Loss of Indication (FI-G33-1R602, 1R609 FDI-G33-1R615)	None	YES	Indication not required for DBA or for EOPs Provides Indication only	R1
		Loss of FY-G33-1K605 Loss of FY-G33-1K602	**RWCU Primary Containment Isolation Valves Close**	YES	Fails in safe direction	
		Loss of Division I	None	YES	Division II available No Div II, Div II Aff or GE Div II/Non Sep associated cables in raceways except NM0I1202F,G	
		Continuous operation of FR-01204A	None		Recorder not required for DBA or for EOPs Provides Indication only	R1
	Short cables to Neutron Mon. Sys classified as Q	Loss of IRM Sel Sw A,B,C,D, E,F,H. IRM Channels Trip	**Neutron Flux SCRAM**	YES	Fails in safe direction	R1
	Short cables to transducers classified as Q	Loss of Computer Inputs	None	YES	Computer not required for DBA or for EOPs Provides Indication Only	R1
	Short cables to Pressure Boundary instruments classified as Q	Loss of Non Class 1E Instrument Loops	None	YES	Non Class 1E Loops not required for DBA or for EOPs Boundaries Maintained (See Appendix K)	R1

SAFETY FUNCTION: RWCU PRIMARY CONTAINMENT ISOLATION
NON CLASS 1E COMPONENT(S); FI-G33-1R602, FI-G33-1R609, FDI-G33-1R615, 1Y218-12

COMPONENT ID	FAILURE MODE	LOCAL EFFECTS INCLUDING DEPENDENT FAILURES	SYSTEM EFFECTS	SINGLE FAILURE MET	REMARKS	
CABLES in same raceways as cables to Non Class 1E Component	Impresed voltages on Non Class 1E cables to FI-G33-1R602 & FI-G33-1R609	Incorrect/Loss of Indication (FI-G33-1R602,1R609)	None	YES	Indication not required for DBA or for EOPs Provides Indication only	R1
	& all cables in contact with Non Class 1E cables	Loss of FY-G33-1K605	**RWCU Primary Containment Isolation Valves Close**	YES	Fails in safe direction	
		Loss of FY-G33-1K602	**RWCU Primary Containment Isolation Valves Close**	YES	Fails in safe direction	
		Loss of Division I	None	YES	Division II available No Div II, Div II Aff or GE Div II/Non Sep associated cables in raceways except NM0I1202F,G	
	Impressed voltage on NM0I1202F,G (DivII Aff)	Continuous/Incorrecrt operation of FR-01204A	None	YES	Recorder not required for DBA or for EOPs Provides Indication only	R1
	Impressed voltage on cables to transducers classified as Q	Loss of Computer Inputs	None	YES	Computer not required for DBA or for EOPs Impressed voltage does not propagate to input of transducers (See Appendix K)	R1

SAFETY FUNCTION: RWCU PRIMARY CONTAINMENT ISOLATION
NON CLASS 1E COMPONENT(S); FI-G33-1R602, FI-G33-1R609, FDI-G33-1R615, 1Y218-12

COMPONENT ID	FAILURE MODE	LOCAL EFFECTS INCLUDING DEPENDENT FAILURES	SYSTEM EFFECTS	SINGLE FAILURE MET	REMARKS
CABLES in same raceways as cables to Non Class 1E Component	Impressed voltage on cables to Neut. Mon. Sys. classified as Q	Loss of IRM Sel Sw A,B,C,D, E,F,H. IRM Channels Trip	**Neutron Flux SCRAM**	YES	Fails in safe direction
	Impressed Voltage on cables to Pressure Boundary instruments classified as Q	Loss of electronics to other Pressure Boundary Instruments with cables in contact with NMIPPF101	None	YES	Non Class 1E Loops not required for DBA or for EOPs Boundaries Maintained (See Appendix K)
	Impresed voltages on Non Class 1E cables to FI-G33-1R602 & FI-G33-1R609 & all cables in contact with Non Class 1E cables	Loss of Power Supply ES-G33-1K600:			
		Loss of output from all: FT-G33-1N012 FT-G33-1N036 FT-G33-1N041	**Prevent closing RWCU Containment Isolation Valves for Leak Detection**	YES	Div II Room High Temp avail. to close RWCU Primary Iso Valves
		Loss of output: FY-G33-1K605 FY-G33-1K602 FY-G33-1K603 FY-G33-1K604 FDSH-G33-1N603B FDSH-G33-1N603A	**RWCU Primary Containment Isolation Valves Close**	YES	Fails in safe direction

References:

J-444 Sh 9	M1-G33-153(2)	M1-B1-131(9)
M-144 Sh 1&2	M1-G33-153(4)	NEDO 10139 Sec 4.1

APPENDIX G

SINGLE FAILURE ANALYSIS FOR CATEGORY 7 GE SUPPLIED NON CLASS 1E INSTRUMENTS CONNECTED TO Q CLASSIFIED INSTRUMENTS

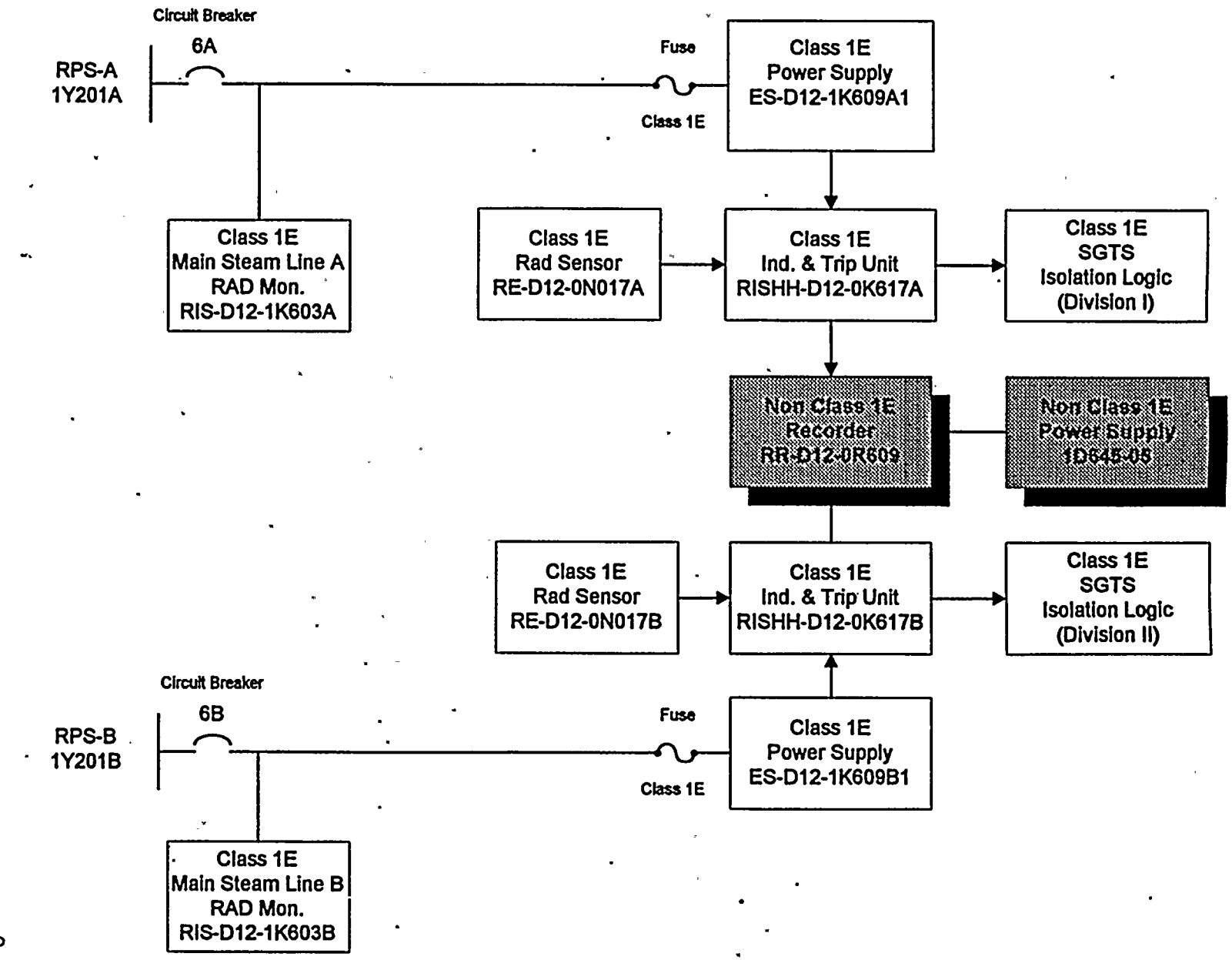

GE1CAT71.VSD

R1

SAFETY FUNCTION: SGTS High Radiation Trip (RISHH-D12-0K617A, RISHH-D12-0K617B)
NON CLASS 1E COMPONENT(S): RR-D12-0R609

COMPONENT ID	FAILURE MODE	LOCAL EFFECTS INCLUDING DEPENDENT FAILURES	SYSTEM EFFECTS	SINGLE FAILURE MET	REMARKS	
RR-D12-0R609 Recorder (Non Class 1E)	Open Circuit Recorder	Loss of Recorder RR-D12-0R609	None	YES	Recorder not required for DBA or for EOPs Recorder Only	R1
	Short Circuit Recorder	Loss of Recorder RR-D12-0R609	None	YES	Recorder not required for DBA or for EOPs Recorder Only	R1
CABLES in same raceways as cables to Non Class 1E Component	Open Cables (All Cables in raceways)	Loss of Recorder RR-D12-0R609, 0R610 RR-D12-1R603, 5, 7, 8	None	YES	Recorders not required for DBA or for EOPs Recorders Only	R1
	Open cables to transducers classified as Q	Loss of Computer Inputs	None	YES	Computer not required for DBA or for EOPs Provides Indication Only	R1
	Open cables to Presuure Boundary instruments classified as Q	Loss of Non Class 1E Instrument Loops	None	YES	Non Class 1E Loops not required for DBA or for EOPs Boundaries Maintained	R1
	Open cables to Neutron Mon Sys classified as Q	Loss of IRM Sel Sw A,B,C,D, E,F,H. IRM Channels Trip	Neutron Flux SCRAM	YES	Fails in safe direction	

SAFETY FUNCTION: SGTS High Radiation Trip (RISHH-D12-0K617A, RISHH-D12-0K617B)
NON CLASS 1E COMPONENT(S): RR-D12-0R609

COMPONENT ID	FAILURE MODE	LOCAL EFFECTS INCLUDING DEPENDENT FAILURES	SYSTEM EFFECTS	SINGLE FAILURE MET	REMARKS	
CABLES in same raceways as cables to Non Class 1E Component	Short Cables	Loss of Recorder RR-D12-0R609, 0R610 RR-D12-1R603, 5, 7, 8	None	YES	Recorders not required for DBA or for EOPs Recorders Only	R1
	Short cables to transducers classified as Q	Loss of Computer Inputs	None	YES	Computer not required for DBA or for EOPs Provides Indication Only	R1
	Short cables to Presuure Boundary instruments classified as Q	Loss of Non Class 1E Instrument Loops	None	YES	Non Class 1E Loops not required for DBA or for EOPs Boundaries maintained	R1
	Short cables to Neutron Mon Sys classified as Q	Loss of IRM Sel Sw A,B,C,D, E,F,H. IRM Channels Trip	Neutron Flux SCRAM	YES	Fails in safe direction	R1
	Impressed voltage Fault	Loss/Incorrect Voltage results in Incorrect Output of:				
		RR-D12-0R609, 0R610 RR-D12-1R603, 5, 7, 8	None	Yes	Recorder not required for DBA or for EOPs	R1
		Spurious Close Signal to SGTS Isolation Valves	None	YES	SGTS Isolation Valves Normally Closed	R1

SAFETY FUNCTION: SGTS High Radiation Trip (RISHH-D12-0K617A, RISHH-D12-0K617B)
NON CLASS 1E COMPONENT(S): RR-D12-0R609

COMPONENT ID	FAILURE MODE	LOCAL EFFECTS INCLUDING DEPENDENT FAILURES	SYSTEM EFFECTS	SINGLE FAILURE MET	REMARKS
CABLES in same raceways as cables to Non Class 1E Component	Impressed Voltage Fault on cables to transducers classified as Q	Loss of Computer Inputs	None	YES	Computer not required for DBA or for EOPs Provides Indication Only Impressed voltage does not propagate to input of transducers (See Appendix K)
	Impressed Voltage Faults on cables to Pressure Boundary instruments classified as Q	Loss of electronics to Pressure Boundary Instruments with cables in contact with NMIPK0602 & NM1PK3302	None	YES	Non Class 1E Loops not required for DBA or for EOPs Boundaries maintained
	Impressed Voltage Faults on cables to Neutron Mon Sys classified as Q	Loss of IRM Sel Sw A,B,C,D, E,F,H. IRM Channels Trip	Neutron Flux SCRAM	YES	Fails in safe direction

References:	
J-478 Sh 1	SEA-EE-180
J-478 Sh 3	

CATEGORY
7

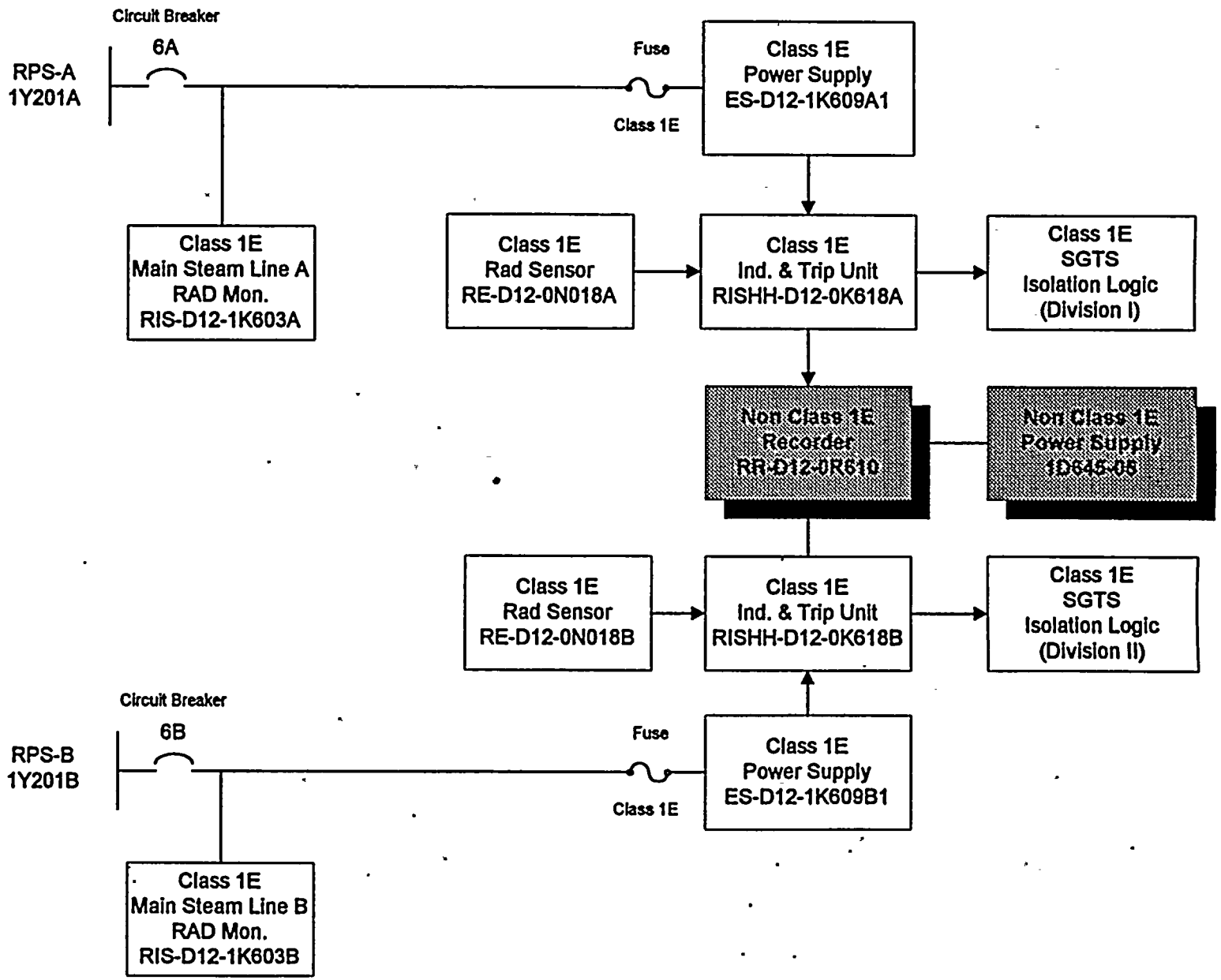

GE1CAT72.VSD

R1

SAFETY FUNCTION: SGTS High Radiation Trip (RISHH-D12-0K618A, RISHH-D12-0K618B)
NON CLASS 1E COMPONENT(S): RR-D12-0R610

COMPONENT ID	FAILURE MODE	LOCAL EFFECTS INCLUDING DEPENDENT FAILURES	SYSTEM EFFECTS	SINGLE FAILURE MET	REMARKS	
RR-D12-0R610 Recorder (Non Class 1E)	Open Circuit Recorder	Loss of Recorder RR-D12-0R610	None	YES	Recorder not required for DBA or for EOPs Recorder Only	R1
	Short Circuit Recorder	Loss of Recorder RR-D12-0R610	None	YES	Recorder not required for DBA or for EOPs Recorder Only	R1
CABLES in same raceways as cables to Non Class 1E Component	Open Cables (All Cables in raceways)	Loss of Recorder RR-D12-0R609, 0R610 RR-D12-1R603, 5, 7, 8	None	YES	Recorders not required for DBA or for EOPs Recorders Only	R1
	Open cables to transducers classified as Q	Loss of Computer Inputs	None	YES	Computer not required for DBA or for EOPs Provides Indication Only	R1
	Open cables to Presuure Boundary instruments classified as Q	Loss of Non Class 1E Instrument Loops	None	YES	Non Class 1E Loops not required for DBA or for EOPs Boundaries Maintained	R1
	Open cables to Neutron Mon Sys classified as Q	Loss of IRM Sel Sw A,B,C,D, E,F,H. IRM Channels Trip	Neutron Flux SCRAM	YES	Fails in safe direction	R1

SAFETY FUNCTION: SGTS High Radiation Trip (RISHH-D12-0K618A, RISHH-D12-0K618B)
NON CLASS 1E COMPONENT(S): RR-D12-0R610

COMPONENT ID	FAILURE MODE	LOCAL EFFECTS INCLUDING DEPENDENT FAILURES	SYSTEM EFFECTS	SINGLE FAILURE MET	REMARKS	
CABLES in same raceways as cables to Non Class 1E Component	Short Cables	Loss of Recorder RR-D12-0R609, 0R610 RR-D12-1R603, 5, 7, 8	None	YES	Recorders not required for DBA or for EOPs Recorders Only	R1
	Short cables to transducers classified as Q	Loss of Computer Inputs	None	YES	Computer not required for DBA or for EOPs Provides Indication Only	R1
	Short cables to Presuure Boundary instruments classified as Q	Loss of Non Class 1E Instrument Loops	None	YES	Non Class 1E Loops not required for DBA or for EOPs Boundaries Maintained	
	Short cables to Neutron Mon Sys classified as Q	Loss of IRM Sel Sw A,B,C,D, E,F,H. IRM Channels Trip	**Neutron Flux SCRAM**	YES	Fails in safe direction	R1
	Impressed voltage Fault	Loss/Incorrect Voltage results in Incorrect Output of:				
		RR-D12-0R609, 0R610 RR-D12-1R603, 5, 6, 7, 8	None	Yes	Recorder not required for DBA or for EOPs	R1
		Spurious Close Signal to SGTS Isolation Valves	None	YES	SGTS Isolation Valves Normally Closed	R1

SAFETY FUNCTION: SGTS High Radiation Trip (RISHH-D12-0K618A, RISHH-D12-0K618B
NON CLASS 1E COMPONENT(S): RR-D12-0R610

COMPONENT ID	FAILURE MODE	LOCAL EFFECTS INCLUDING DEPENDENT FAILURES	SYSTEM EFFECTS	SINGLE FAILURE MET	REMARKS	
CABLES in same raceways as cables to Non Class 1E Component	Impressed Voltage Fault on cables to transducers classified as Q	Loss of Computer Inputs	None	YES	Computer not required for DBA or for EOPs Provides Indication Only Impressed voltage does not propagate to input of transducers (See Appendix K)	| R1
	Impressed Voltage Faults on cables to Pressure Boundary instruments classified as Q	Loss of electronics to Pressure Boundary Instruments with cables in contact with NMIPK0602 & NM1PK3302	None	YES	Non Class 1E Loops not required for DBA or for EOPs Boundaries Maintained	| R1
	Impressed Voltage Faults on cables to Neutron Mon Sys classified as Q	Loss of IRM Sel Sw A,B,C,D, E,F,H. IRM Channels Trip	**Neutron Flux SCRAM**	YES	Fails in safe direction	| R1

References:

J-478 Sh 2 SEA-EE-180
J-478 Sh 4

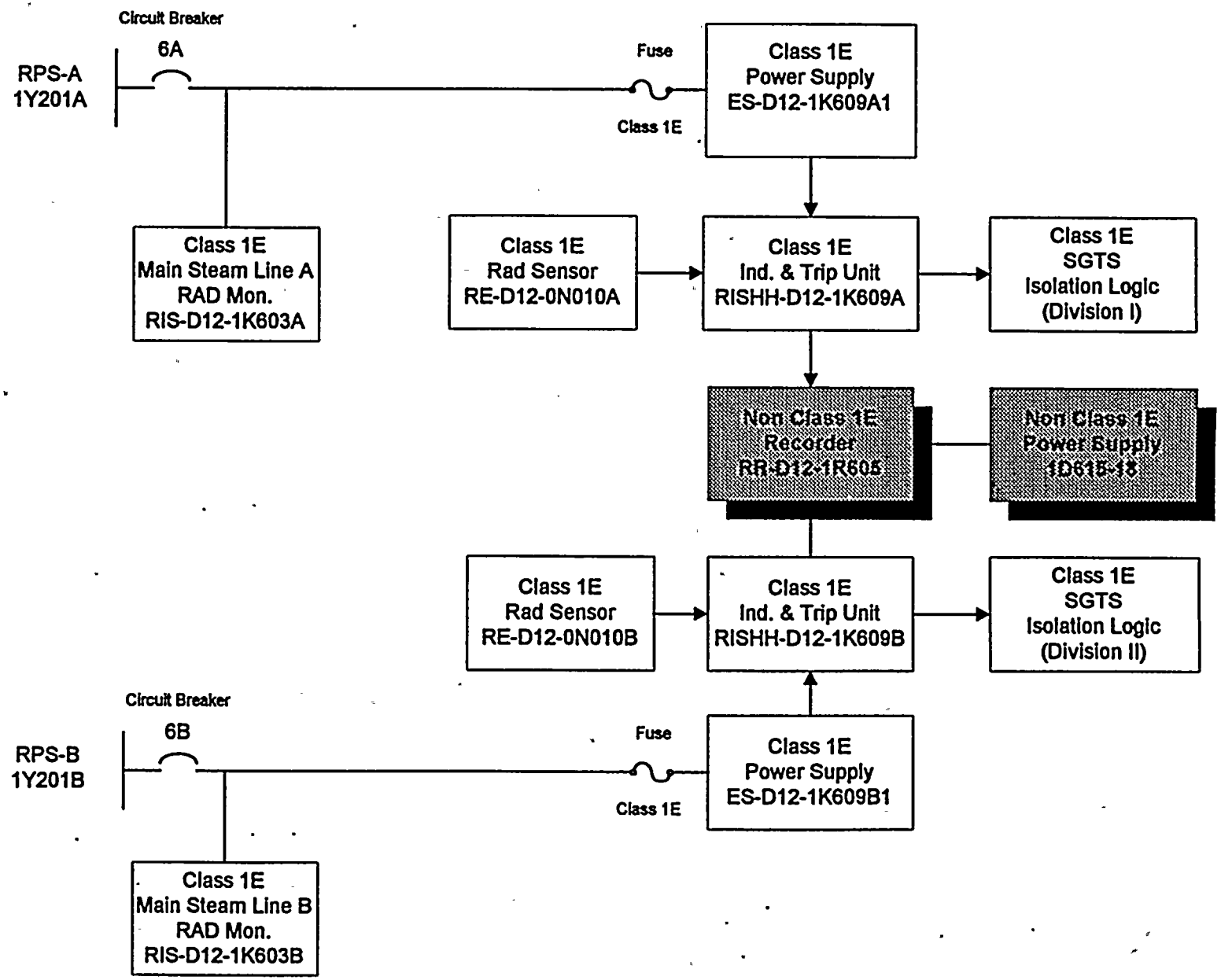

GE1CAT73.VSD

R1

SAFETY FUNCTION: STGS High Radiation Trip (RISHH-D12-1K609A, RISHH-D12-1K609B)
NON CLASS 1E COMPONENT(S): RR-D12-1R605

COMPONENT ID	FAILURE MODE	LOCAL EFFECTS INCLUDING DEPENDENT FAILURES	SYSTEM EFFECTS	SINGLE FAILURE MET	REMARKS	
RR-D12-1R605 Recorder (Non Class 1E)	Open Circuit Recorder	Loss of Recorder RR-D12-1R605	None	YES	Recorder not required for DBA or for EOPs Recorder Only	R1
	Short Circuit Recorder	Loss of Recorder RR-D12-1R605	None	YES	Recorder not required for DBA or for EOPs Recorder Only	R1
CABLES in same raceways as cables to Non Class 1E Component	Open Cables (All Cables in raceways)	Loss of Recorder RR-D12-0R609, 0R610 RR-D12-1R603, 5, 7, 8	None	YES	Recorders not required for DBA or for EOPs Recorders Only	R1
	Open cables to transducers classified as Q	Loss of Computer Inputs	None	YES	Computer not required for DBA or for EOPs Provides Indication Only	R1
	Open cables to Presuure Boundary instruments classified as Q	Loss of Non Class 1E Instrument Loops	None	YES	Non Class 1E Loops not required for DBA or for EOPs Boundaries Maintained	R1
	Open cables to Neutron Mon Sys classified as Q	Loss of IRM Sel Sw A,B,C,D, E,F,H. IRM Channels Trip	Neutron Flux SCRAM	YES	Fails in safe direction	R1

SAFETY FUNCTION: STGS High Radiation Trip (RISHH-D12-1K609A, RISHH-D12-1K609B)
NON CLASS 1E COMPONENT(S): RR-D12-1R605

COMPONENT ID	FAILURE MODE	LOCAL EFFECTS INCLUDING DEPENDENT FAILURES	SYSTEM EFFECTS	SINGLE FAILURE MET	REMARKS	
CABLES in same raceways as cables to Non Class 1E Component	Short Cables	Loss of Recorder RR-D12-0R609, 0R610 RR-D12-1R603, 5, 7, 8	None	YES	Recorders not required for DBA or for EOPs Recorders Only	R1
	Short cables to transducers classified as Q	Loss of Computer Inputs	None	YES	Computer not required for DBA or for EOPs Provides Indication Only	R1
	Short cables to Presuure Boundary instruments classified as Q	Loss of Non Class 1E Instrument Loops	None	YES	Non Class 1E Loops not required for DBA or for EOPs Boundaries Maintained	R1
	Short cables to Neutron Mon Sys classified as Q	Loss of IRM Sel Sw A,B,C,D, E,F,H. IRM Channels Trip	Neutron Flux SCRAM	YES	Fails in safe direction	R1
	Impressed voltage Fault	Loss/Incorrect Voltage results in Incorrect Output of:				
		RR-D12-0R609, 0R610 RR-D12-1R603, 5, 7, 8	None	YES	Recorder not required for DBA or for EOPs	R1
		Spurious Close Signal to SGTS Isolation Valves	None	YES	SGTS Isolation Valves Normally Closed	R1

SAFETY FUNCTION: STGS High Radiation Trip (RISHH-D12-1K609A, RISHH-D12-1K609B)
NON CLASS 1E COMPONENT(S): RR-D12-1R605

COMPONENT ID	FAILURE MODE	LOCAL EFFECTS INCLUDING DEPENDENT FAILURES	SYSTEM EFFECTS	SINGLE FAILURE MET	REMARKS	
CABLES in same raceways as cables to Non Class 1E Component	Impressed Voltage Fault on cables to transducers classified as Q	Loss of Computer Inputs	None	YES	Computer not required for DBA or for EOPs Provides Indication Only Impressed voltage does not propagate to input of transducers (See Appendix K)	R1
	Impressed Voltage Faults on cables to Pressure Boundary instruments classified as Q	Loss of electronics to Pressure Boundary Instruments with cables in contact with NM1PK0602 & NM1PK3302	None	YES	Non Class 1E Loops not required for DBA or for EOPs Boundaries Maintained	R1
	Impressed Voltage Faults on cables to Neutron Mon Sys classified as Q	Loss of IRM Sel Sw A,B,C,D, E,F,H. IRM Channels Trip	Neutron Flux SCRAM	YES	Fails in safe direction	R1

References:

J-475 Sh 1 SEA-EE-180
J-475 Sh 4

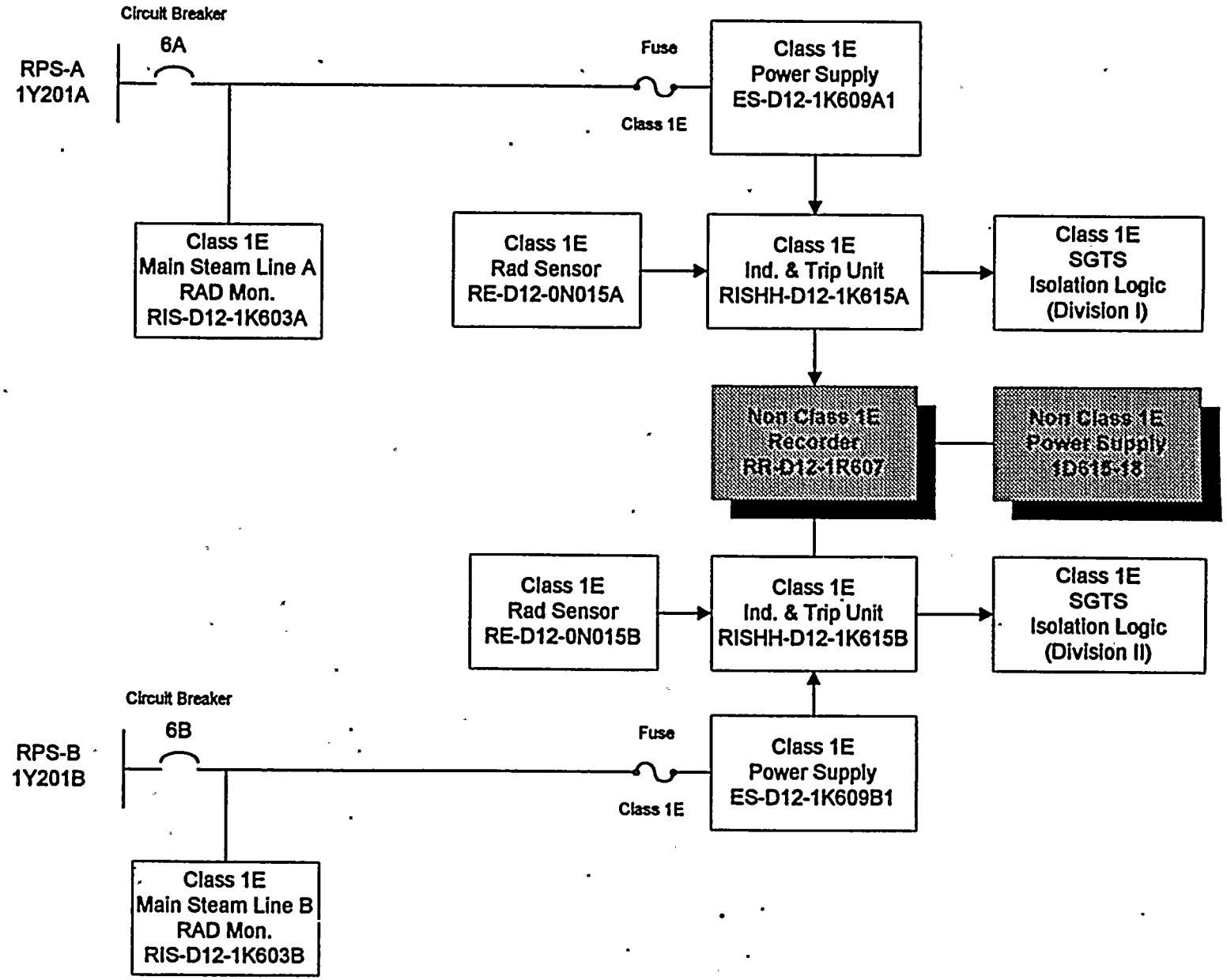

GE1CAT74.VSD

R1

SAFETY FUNCTION: SGTS High Radiation Trip (RISHH-D12-1K615A, RISHH-D12-1K615B)
NON CLASS 1E COMPONENT(S): RR-D12-1R607

COMPONENT ID	FAILURE MODE	LOCAL EFFECTS INCLUDING DEPENDENT FAILURES	SYSTEM EFFECTS	SINGLE FAILURE MET	REMARKS	
RR-D12-1R607 Recorder (Non Class 1E)	Open Circuit Recorder	Loss of Recorder RR-D12-1R607	None	YES	Recorder not required for DBA or for EOPs Recorder Only	R1
	Short Circuit Recorder	Loss of Recorder RR-D12-1R607	None	YES	Recorder not required for DBA or for EOPs Recorder Only	R1
CABLES in same raceways as cables to Non Class 1E Component	Open Cables (All Cables in raceways)	Loss of Recorder RR-D12-0R609, 0R610 RR-D12-1R603, 5, 7, 8	None	YES	Recorders not required for DBA or for EOPs Recorders Only	R1
	Open cables to transducers classified as Q	Loss of Computer Inputs	None	YES	Computer not required for DBA or for EOPs Provides Indication Only	R1
	Open cables to Presuure Boundary instruments classified as Q	Loss of Non Class 1E Instrument Loops	None	YES	Non Class 1E Loops not required for DBA or for EOPs Boundaries Maintained	R1
	Open cables to Neutron Mon Sys classified as Q	Loss of IRM Sel Sw A,B,C,D, E,F,H. IRM Channels Trip	Neutron Flux SCRAM	YES	Fails in safe direction	R1

SAFETY FUNCTION: SGTS High Radiation Trip (RISHH-D12-1K615A, RISHH-D12-1K615B)
NON CLASS 1E COMPONENT(S): RR-D12-1R607

COMPONENT ID	FAILURE MODE	LOCAL EFFECTS INCLUDING DEPENDENT FAILURES	SYSTEM EFFECTS	SINGLE FAILURE MET	REMARKS	
CABLES in same raceways as cables to Non Class 1E Component	Short Cables	Loss of Recorder RR-D12-0R609, 0R610 RR-D12-1R603, 5, 7, 8	None	YES	Recorders not required for DBA or for EOPs Recorders Only	R1
	Short cables to transducers classified as Q	Loss of Computer Inputs	None	YES	Computer not required for DBA or for EOPs Provides Indication Only	R1
	Short cables to Presuure Boundary instruments classified as Q	Loss of Non Class 1E Instrument Loops	None	YES	Non Class 1E Loops not required for DBA or for EOPs Boundaries Maintained	R1
	Short cables to Neutron Mon Sys classified as Q	Loss of IRM Sel Sw A,B,C,D, E,F,H. IRM Channels Trip	**Neutron Flux SCRAM**	YES	Fails in safe direction	R1
	Impressed voltage Fault	Loss/Incorrect Voltage results in Incorrect Output of:				
		RR-D12-0R609, 0R610 RR-D12-1R603, 5, 7, 8	None	YES	Recorder not required for DBA or for EOPs Recorders isolated.	R1
		Spurious Close Signal to SGTS Isolation Valves	None	YES	SGTS Isolation Valves Normally Closed	R1

SAFETY FUNCTION: SGTS High Radiation Trip (RISHH-D12-1K615A, RISHH-D12-1K615B)
NON CLASS 1E COMPONENT(S): RR-D12-1R607

COMPONENT ID	FAILURE MODE	LOCAL EFFECTS INCLUDING DEPENDENT FAILURES	SYSTEM EFFECTS	SINGLE FAILURE MET	REMARKS	
CABLES in same raceways as cables to Non Class 1E Component	Impressed Voltage Fault on cables to transducers classified as Q	Loss of Computer Inputs	None	YES	Computer not required for DBA or for EOPs Provides Indication Only Impressed voltage does not propagate to input of transducers (See Appendix K)	R1
	Impressed Voltage Faults on cables to Pressure Boundary instruments classified as Q	Loss of electronics to Pressure Boundary Instruments with cables in contact with NMIPK0602 & NM1PK3302	None	YES	Non Class 1E Loops not required for DBA or for EOPs Boundaries Maintained	R1
	Impressed Voltage Faults on cables to Neutron Mon Sys classified as Q	Loss of IRM Sel Sw A,B,C,D, E,F,H. IRM Channels Trip	**Neutron Flux SCRAM**	YES	Fails in safe direction	R1

References:

J-475 Sh 2
J-475 Sh 5
SEA-EE-180

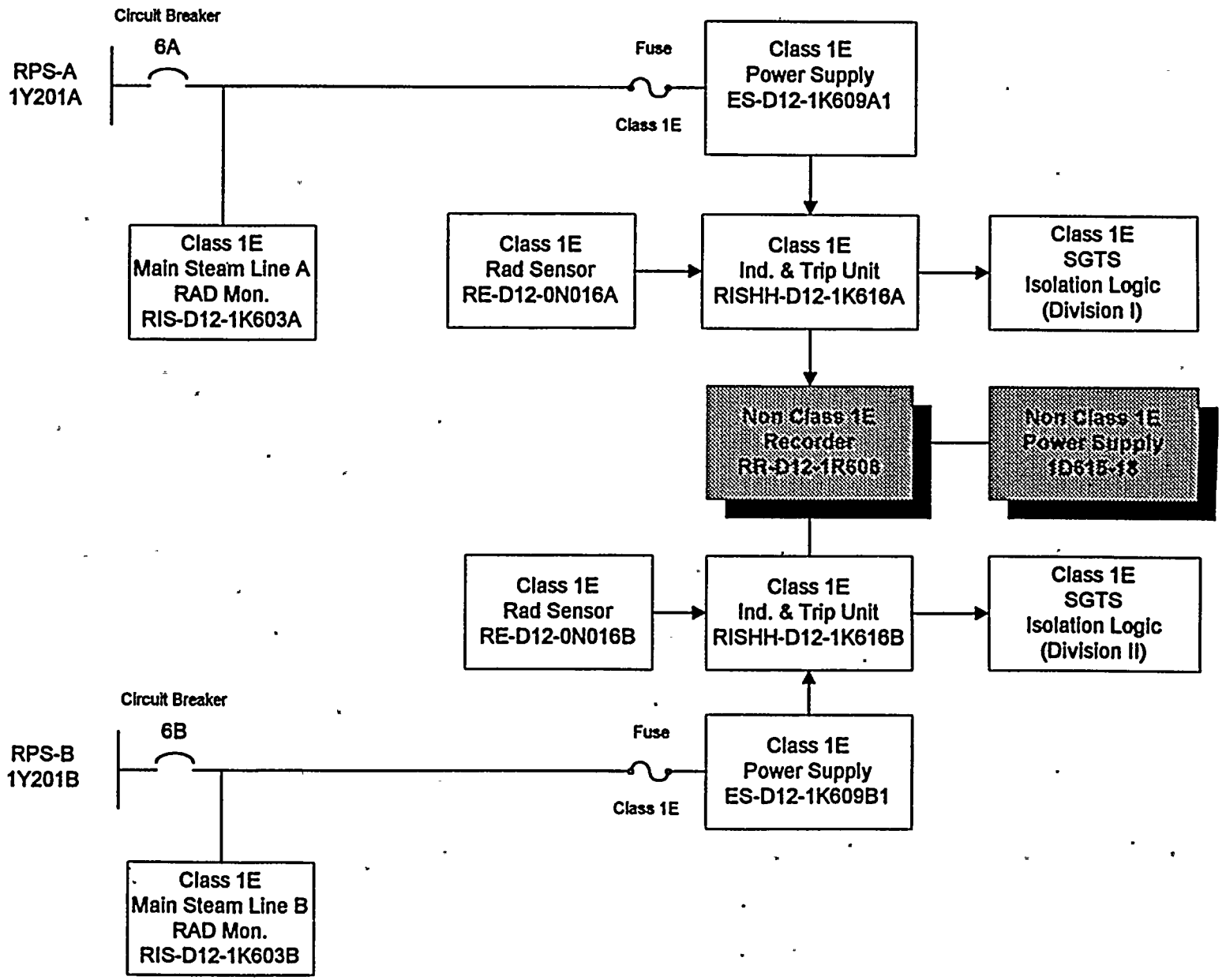

GE1CAT75.VSD

R1

SAFETY FUNCTION: SGTS High Radiation Trip (RISHH-D12-1K616A, RISHH-D12-1K616B)
NON CLASS 1E COMPONENT(S): RR-D12-1R608

COMPONENT ID	FAILURE MODE	LOCAL EFFECTS INCLUDING DEPENDENT FAILURES	SYSTEM EFFECTS	SINGLE FAILURE MET	REMARKS	
RR-D12-1R608 Recorder (Non Class 1E)	Open Circuit Recorder	Loss of Recorder RR-D12-1R607	None	YES	Recorder not required for DBA or for EOPs Recorder Only	R1
	Short Circuit Recorder	Loss of Recorder RR-D12-1R607	None	YES	Recorder not required for DBA or for EOPs Recorder Only	R1
CABLES in same raceways as cables to Non Class 1E Component	Open Cables (All Cables in raceways)	Loss of Recorder RR-D12-0R609, 0R610 RR-D12-1R603, 5, 7, 8	None	YES	Recorders not required for DBA or for EOPs Recorders Only	R1
	Open cables to transducers classified as Q	Loss of Computer Inputs	None	YES	Computer not required for DBA or for EOPs Provides Indication Only	R1
	Open cables to Presuure Boundary instruments classified as Q	Loss of Non Class 1E Instrument Loops	None	YES	Non Class 1E Loops not required for DBA or for EOPs Boundaries maintained	R1
	Open cables to Neutron Mon Sys classified as Q	Loss of IRM Sel Sw A,B,C,D, E,F,H. IRM Channels Trip	Neutron Flux SCRAM	YES	Fails in safe direction	R1

SAFETY FUNCTION: SGTS High Radiation Trip (RISHH-D12-1K616A, RISHH-D12-1K616B)
NON CLASS 1E COMPONENT(S): RR-D12-1R608

COMPONENT ID	FAILURE MODE	LOCAL EFFECTS INCLUDING DEPENDENT FAILURES	SYSTEM EFFECTS	SINGLE FAILURE MET	REMARKS	
CABLES in same raceways as cables to Non Class 1E Component	Short Cables	Loss of Recorder RR-D12-0R609, 0R610 RR-D12-1R603, 5, 7, 8	None	YES	Recorders not required for DBA or for EOPs Recorders Only	R1
	Short cables to transducers classified as Q	Loss of Computer Inputs	None	YES	Computer not required for DBA or for EOPs Provides Indication Only	R1
	Short cables to Presuure Boundary instruments classified as Q	Loss of Non Class 1E Instrument Loops	None	YES	Non Class 1E Loops not required for DBA or for EOPs Boundaries Maintained	R1
	Short cables to Neutron Mon Sys classified as Q	Loss of IRM Sel Sw A,B,C,D, E,F,H. IRM Channels Trip	**Neutron Flux SCRAM**	YES	Fails in safe direction	R1
	Impressed voltage Fault	Loss/Incorrect Voltage results in Incorrect Output of:				
		RR-D12-0R609, 0R610 RR-D12-1R603, 5, 7, 8	None	YES	Recorder not required for DBA or for EOPs Recorder isolated.	R1
		Spurious Close Signal to SGTS Isolation Valves	None	YES	SGTS Isolation Valves Normally Closed	R1

SAFETY FUNCTION: SGTS High Radiation Trip (RISHH-D12-1K616A, RISHH-D12-1K616B)
NON CLASS 1E COMPONENT(S): RR-D12-1R608

COMPONENT ID	FAILURE MODE	LOCAL EFFECTS INCLUDING DEPENDENT FAILURES	SYSTEM EFFECTS	SINGLE FAILURE MET	REMARKS	
CABLES in same raceways as cables to Non Class 1E Component	Impressed Voltage Fault on cables to transducers classified as Q	Loss of Computer Inputs	None	YES	Computer not required for DBA or for EOPs Provides Indication Only Impressed voltage does not propagate to input of transducers (See Appendix K)	R1
	Impressed Voltage Faults on cables to Pressure Boundary instruments classified as Q	Loss of electronics to Pressure Boundary Instruments with cables in contact with NM1PK0602 & NM1PK3302	None	YES	Non Class 1E Loops not required for DBA or for EOPs Boundaries Maintained	R1
	Impressed Voltage Faults on cables to Neutron Mon Sys classified as Q	Loss of IRM Sel Sw A,B,C,D, E,F,H. IRM Channels Trip	Neutron Flux SCRAM	YES	Fails in safe direction	R1

References:

J-475 Sh 3
J-475 Sh 6

SEA-EE-180

APPENDIX H

SINGLE FAILURE ANALYSIS FOR CATEGORY 8 GE SUPPLIED NON CLASS 1E INSTRUMENTS CONNECTED TO Q CLASSIFIED INSTRUMENTS

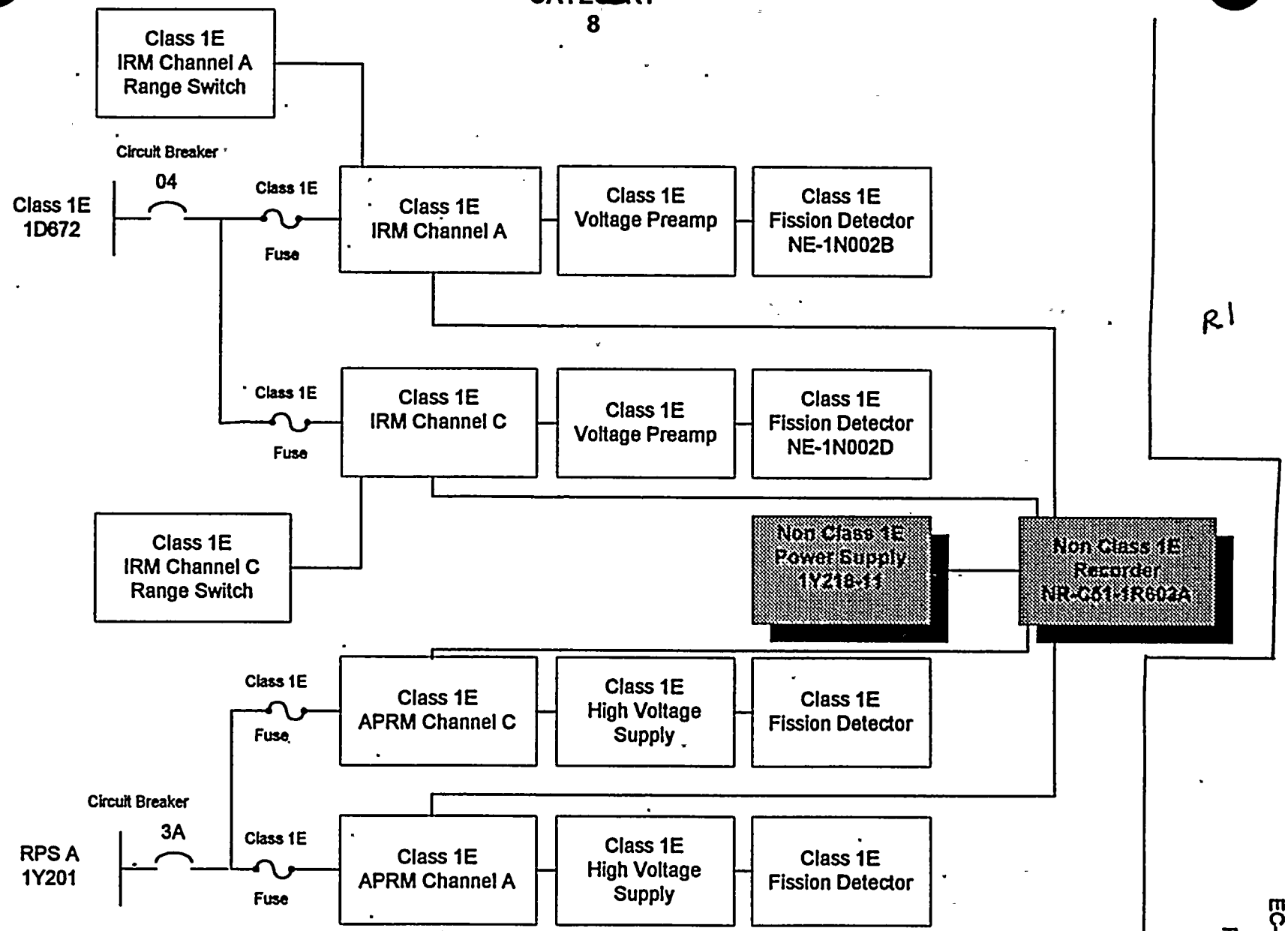

R1

GE1CAT81.VSD

SAFETY FUNCTION: APRM CHANNEL A,C and IRM CHANNELS A, C
NON CLASS 1E COMPONENT(S): NR-C51-1R603A

COMPONENT ID	FAILURE MODE	LOCAL EFFECTS INCLUDING DEPENDENT FAILURES	SYSTEM EFFECTS	SINGLE FAILURE MET	REMARKS	
NR-C51-1R603A (Non Class 1E)	Open Recorder	Loss of Recorder	None	YES	Recorder not required for DBA or for EOPs Provides Indication only	R1
	Short Recorder	Loss of Recorder	None	YES	Recorder not required for DBA or for EOPs Provides Indication only	R1
CABLES in same raceways as cables to Non Class 1E Component	Short cables to Neutron Mon Sys classified as Q	Loss of Recorders NR-C51-1R603A, B, C, D	None	YES	Recorder not required for DBA or for EOPs Provides Indication only	R1
		Loss of IRM Sel Sw A,B,C,D, E,F,H. IRM Channels Trip	**Neutron Flux SCRAM**	YES	Fails in safe direction	R1
	Short cables to transducers classified as Q & LPRMs	Loss of Computer Inputs	None	YES	Computer not required for DBA or for EOPs Provides Indication Only	R1
	Short cables to Presuure Boundary instruments classified as Q	Loss of Non Class 1E Instrument Loops	None	YES	Non Class 1E Loops not required for DBA or for EOPs Boundaries Maintained	R1

SAFETY FUNCTION: APRM CHANNEL A,C Trip and IRM CHANNELS A, C Trip
NON CLASS 1E COMPONENT(S): NR-C51-1R603A

COMPONENT ID	FAILURE MODE	LOCAL EFFECTS INCLUDING DEPENDENT FAILURES	SYSTEM EFFECTS	SINGLE FAILURE MET	REMARKS	
CABLES in same raceways as cables to Non Class 1E Component	Open cables to Neutron Mon Sys classified as Q	Loss of Recorders NR-C51-1R603A, B, C, D	None	YES	Recorder not required for DBA or for EOPs Provides Indication only	R1
		Loss of IRM Sel Sw A,B,C,D, E,F,H. IRM Channels Trip	Neutron Flux SCRAM	YES	Fails in safe direction	R1
	Open cables to transducers classified as Q & LPRMs	Loss of Computer Inputs	None	YES	Computer not required for DBA or for EOPs Provides Indication Only	R1
	Open cables to Presuure Boundary instruments classified as Q	Loss of Non Class 1E Instrument Loops	None	YES	Non Class 1E Loops not required for DBA or for EOPs Boundaries Maintained	R1

SAFETY FUNCTION: APRM CHANNEL A,C Trip and IRM CHANNELS A, C Trip
NON CLASS 1E COMPONENT(S): NR-C51-1R603A

COMPONENT ID	FAILURE MODE	LOCAL EFFECTS INCLUDING DEPENDENT FAILURES	SYSTEM EFFECTS	SINGLE FAILURE MET	REMARKS	
CABLES in same raceways as cables to Non Class 1E Component	Impressed voltage fault on cables to Neutron Mon Sys classified as Q	Loss of Recorder NR-C51-1R603A, B, C, D	None	YES	Recorder not required for DBA or for EOPs Provides Indication only	R1
		Spurious APRM & IRM Channel Trips	Neutron Flux SCRAM	YES	Fails in Safe Direction (See SEA-EE-180 Cat 4)	R1
		Loss of IRM Sel Sw A,B,C,D, E,F,H. IRM Channels Trip	Neutron Flux SCRAM	YES	Fails in safe direction	R1
	Impressed Voltage Fault on cables to transducers classified as Q	Loss of Computer Inputs	None	YES	Computer not required for DBA or for EOPs Provides Indication Only Impressed voltage does not propagate to input of transducers (See Appendix K)	R1
	Impressed Voltage Fault on cables to LPRMs	Spurious APRM Channel Trips	Neutron Flux SCRAM	YES	Fails in Safe Direction (See SEA-EE-180 Cat4)	R1

SAFETY FUNCTION: APRM CHANNEL A,C Trip and IRM CHANNELS A, C Trip
NON CLASS 1E COMPONENT(S): NR-C51-1R603A

COMPONENT ID	FAILURE MODE	LOCAL EFFECTS INCLUDING DEPENDENT FAILURES	SYSTEM EFFECTS	SINGLE FAILURE MET	REMARKS
CABLES in same raceways as cables to Non Class 1E Component	Impressed Voltage Faults on cables to Pressure Boundary instruments classified as Q	Loss of electronics to Pressure Boundary Instruments with cables in contact with NMIPE4110 & NM1PQ4101	None	YES	Non Class 1E Loops not required for DBA or for EOPs Boundaries Maintained

R1

References:

M1-C51-20 Sh 6
M1-C51-19 SH 16
SEA-EE-180
NEDO 10139

CATEGORY
8

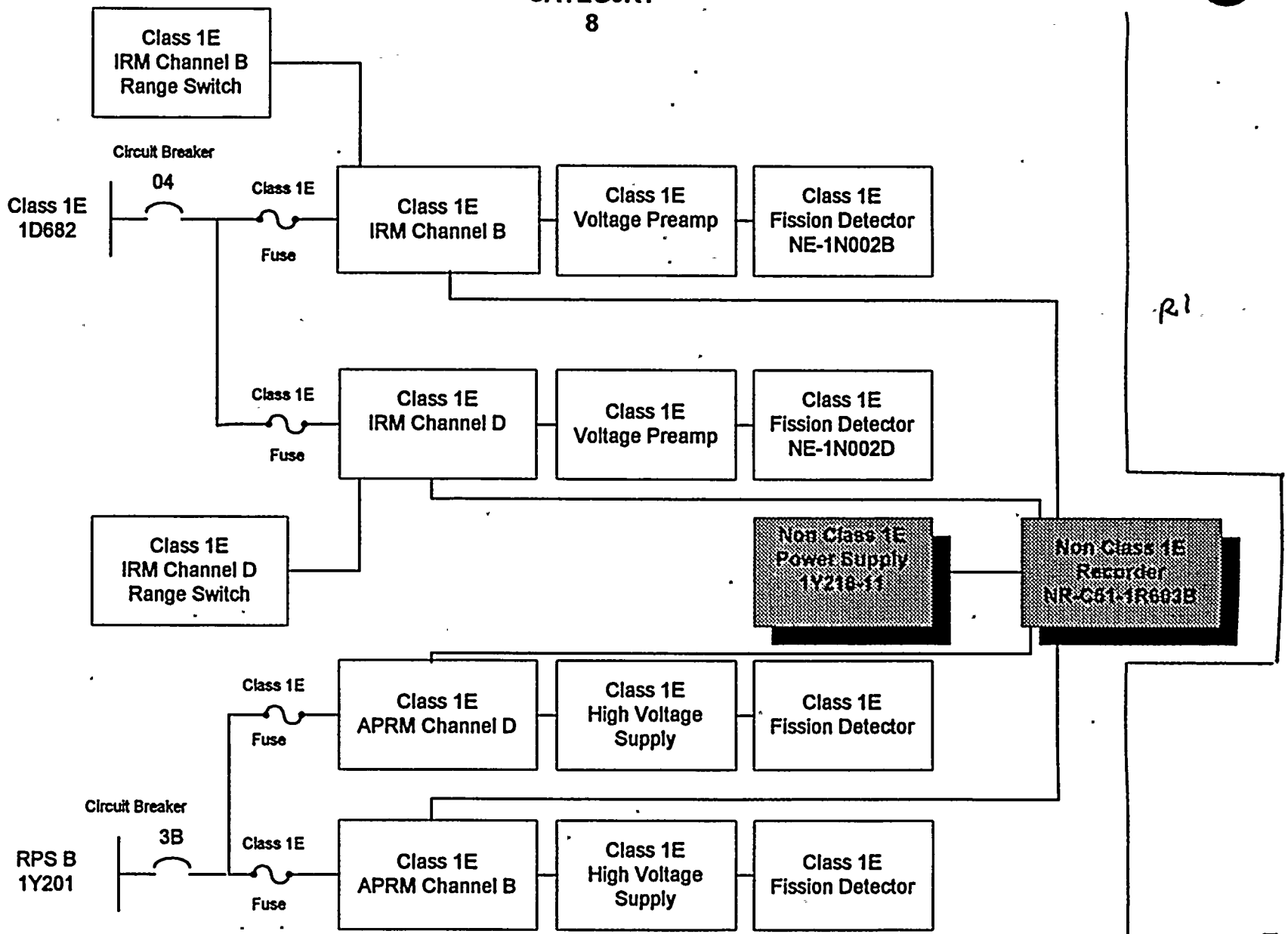

R1

GE1CAT82.VSD

SAFETY FUNCTION: APRM CHANNEL B, D Trip and IRM CHANNELS B, D Trip
NON CLASS 1E COMPONENT(S): NR-C51-1R603B

COMPONENT ID	FAILURE MODE	LOCAL EFFECTS INCLUDING DEPENDENT FAILURES	SYSTEM EFFECTS	SINGLE FAILURE MET	REMARKS	
NR-C51-1R603B (Non Class 1E)	Open Recorder	Loss of Recorder	None	YES	Recorder not required for DBA or for EOPs Provides Indication only	R1
	Short Recorder	Loss of Recorder	None	YES	Recorder not required for DBA or for EOPs Provides Indication only	R1
CABLES in same raceways as cables to Non Class 1E Component	Short cables to Neutron Mon Sys classified as Q	Loss of Recorders NR-C51-1R603A, B, C, D	None	YES	Recorders not required for DBA or for EOPs Provides Indication only	R1
		Loss of IRM Sel Sw A,B,C,D, E,F,H. IRM Channels Trip	**Neutron Flux SCRAM**	YES	Fails in safe direction	R1
	Short cables	Loss of Division II	None	YES	Division I available No Div I, Div I Aff or GE Div I/Non Sep associated cables in raceways	
	Short cables to transducers classified as Q & LPRMs	Loss of Computer Inputs	None	YES	Computer not required for DBA or for EOPs Provides Indication Only	R1
	Short cables to Presuure Boundary instruments classified as Q	Loss of Non Class 1E Instrument Loops	None	YES	Non Class 1E Loops not required for DBA or for EOPs Boundaries Maintained	R1

SAFETY FUNCTION: APRM CHANNEL B, D Trip and IRM CHANNELS B, D Trip
NON CLASS 1E COMPONENT(S): NR-C51-1R603B

COMPONENT ID	FAILURE MODE	LOCAL EFFECTS INCLUDING DEPENDENT FAILURES	SYSTEM EFFECTS	SINGLE FAILURE MET	REMARKS	
CABLES in same raceways as cables to Non Class 1E Component	Open cables to Neutron Mon Sys classified as Q	Loss of Recorders NR-C51-1R603A, B, C, D	None	YES	Recorders not required for DBA or for EOPs Provides Indication only	R1
		Loss of IRM Sel Sw A,B,C,D, E,F,H. IRM Channels Trip	Neutron Flux SCRAM	YES	Fails in safe direction	R1
	Open cables	Loss of Division II	None	YES	Division I available No Div I, Div I Aff or GE Div I/Non Sep associated cables in raceways	
	Open cables to transducers classified as Q & LPRMs	Loss of Computer Inputs	None	YES	Computer not required for DBA or for EOPs Provides Indication Only	R1
	Open cables to Presuure Boundary instruments classified as Q	Loss of Non Class 1E Instrument Loops	None	YES	Non Class 1E Loops not required for DBA or for EOPs Boundaries Maintained	R1

SAFETY FUNCTION: APRM CHANNEL B, D Trip and IRM CHANNELS B, D Trip
NON CLASS 1E COMPONENT(S): NR-C51-1R603B

COMPONENT ID	FAILURE MODE	LOCAL EFFECTS INCLUDING DEPENDENT FAILURES	SYSTEM EFFECTS	SINGLE FAILURE MET	REMARKS	
CABLES in same raceways as cables to Non Class 1E Component	Impressed voltage fault on cables to Neutron Mon Sys classified as Q	Loss of Recorder NR-C51-1R603A, B, C, D	None	YES	Recorders not required for DBA or for EOPs Provides Indication only	R1
		Spurious APRM & IRM Channel Trips	Neutron Flux SCRAM	YES	Fails in Safe Direction (See SEA-EE-180 Cat 4)	R1
		Loss of IRM Sel Sw A,B,C,D, E,F,H. IRM Channels Trip	Neutron Flux SCRAM	YES	Fails in safe direction	R1
	Impressed voltage fault on cables	Loss of Division II	None	YES	Division I available No Div I, Div I Aff or GE Div I/Non Sep associated cables in raceways	
	Impressed Voltage Fault on cables to transducers classified as Q	Loss of Computer Inputs	None	YES	Computer not required for DBA or for EOPs Provides Indication Only Impressed voltage does not propagate to input of transducers (See Appendix K)	R1
	Impressed Voltage Fault on cables to LPRMs	Spurious APRM Channel Trips	Neutron Flux SCRAM	YES	Fails in Safe Direction (See SEA-EE-180 Cat 4)	R1

SAFETY FUNCTION: APRM CHANNEL B, D Trip and IRM CHANNELS B, D Trip
NON CLASS 1E COMPONENT(S): NR-C51-1R603B

COMPONENT ID	FAILURE MODE	LOCAL EFFECTS INCLUDING DEPENDENT FAILURES	SYSTEM EFFECTS	SINGLE FAILURE MET	REMARKS
CABLES in same raceways as cables to Non Class 1E Component	Impressed Voltage Faults on cables to Pressure Boundary instruments classified as Q	Loss of electronics to Pressure Boundary Instruments with cables in contact with NM1PE4109, NM1PE4103, NM1PDX01 NM1PDX02	None	YES	Non Class 1E Loops not required for DBA or for EOPs Boundaries Maintained

R1

References:

M1-C51-20 Sh 7
M1-C51-19 SH 12
SEA-EE-180
NEDO 10139

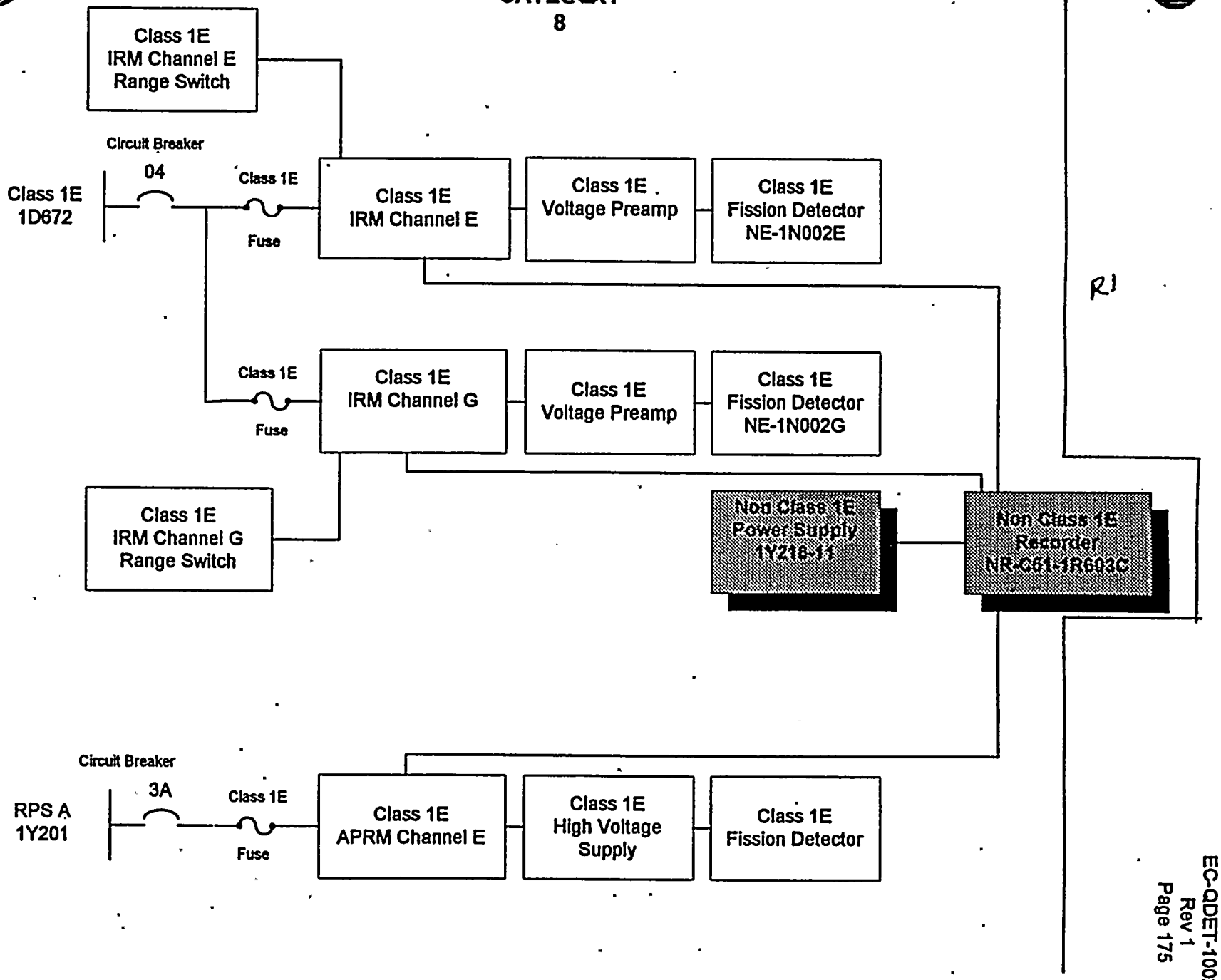

GE1CAT83.VSD

SAFETY FUNCTION: APRM CHANNEL E Trip and IRM CHANNELS E, G Trip
NON CLASS 1E COMPONENT(S): NR-C51-1R603C

COMPONENT ID	FAILURE MODE	LOCAL EFFECTS INCLUDING DEPENDENT FAILURES	SYSTEM EFFECTS	SINGLE FAILURE MET	REMARKS	
NR-C51-1R603C (Non Class 1E)	Open Recorder	Loss of Recorder	None	YES	Recorder not required for DBA or for EOPs Provides Indication only	R1
	Short Recorder	Loss of Recorder	None	YES	Recorder not required for DBA or for EOPs Provides Indication only	R1
CABLES in same raceways as cables to Non Class 1E Component	Short cables to Neutron Mon Sys classified as Q	Loss of Recorders NR-C51-1R603A, B, C, D	None	YES	Recorders not required for DBA or for EOPs Provides Indication only	R1
		Loss of IRM Sel Sw A,B,C,D, E,F,H. IRM Channels Trip	**Neutron Flux SCRAM**	YES	Fails in safe direction	R1
	Short cables to transducers classified as Q & LPRMs	Loss of Computer Inputs	None	YES	Computer not required for DBA or for EOPs Provides Indication Only	R1
	Short cables to Presuure Boundary instruments classified as Q	Loss of Non Class 1E Instrument Loops	None	YES	Non Class 1E Loops not required for DBA or for EOPs Boundaries Maintained	R1

SAFETY FUNCTION: APRM CHANNEL E Trip and IRM CHANNELS E, G Trip
NON CLASS 1E COMPONENT(S): NR-C51-1R603C

COMPONENT ID	FAILURE MODE	LOCAL EFFECTS INCLUDING DEPENDENT FAILURES	SYSTEM EFFECTS	SINGLE FAILURE MET	REMARKS	
CABLES in same raceways as cables to Non Class 1E Component	Open cables to Neutron Mon Sys classified as Q	Loss of Recorders NR-C51-1R603A, B, C, D	None	YES	Recorders not required for DBA or for EOPs Provides Indication only	R1
		Loss of IRM Sel Sw A,B,C,D, E,F,H. IRM Channels Trip	Neutron Flux SCRAM	YES	Fails in safe direction	R1
	Open cables to transducers classified as Q & LPRMs	Loss of Computer Inputs	None	YES	Computer not required for DBA or for EOPs Provides Indication Only	R1
	Open cables to Presuure Boundary instruments classified as Q	Loss of Non Class 1E Instrument Loops	None	YES	Non Class 1E Loops not required for DBA or for EOPs Boundaries Maintained	R1

SAFETY FUNCTION: APRM CHANNEL E Trip and IRM CHANNELS E, G Trip
NON CLASS 1E COMPONENT(S): NR-C51-1R603C

COMPONENT ID	FAILURE MODE	LOCAL EFFECTS INCLUDING DEPENDENT FAILURES	SYSTEM EFFECTS	SINGLE FAILURE MET	REMARKS	
CABLES in same raceways as cables to Non Class 1E Component	Impressed voltage fault on cables to Neutron Mon Sys classified as Q	Loss of Recorder NR-C51-1R603A, B, C, D	None	YES	Recorders not required for DBA or for EOPs. Provides Indication only	R1
		Spurious APRM & IRM Channel Trips	Neutron Flux SCRAM	YES	Fails in Safe Direction (See SEA-EE-180 Cat 4)	R1
		Loss of IRM Sel Sw A,B,C,D, E,F,H. IRM Channels Trip	Neutron Flux SCRAM	YES	Fails in safe direction	R1
	Impressed Voltage Fault on cables to transducers classified as Q	Loss of Computer Inputs	None	YES	Computer not required for DBA or for EOPs Provides Indication Only Impressed voltage does not propagate to input of transducers (See Appendix K)	R1
	Impressed Voltage Fault on cables to LPRMs	Spurious APRM Channel Trips	Neutron Flux SCRAM	YES	Fails in Safe Direction (See SEA-EE-180 Cat 4)	R1

SAFETY FUNCTION: APRM CHANNEL E Trip and IRM CHANNELS E, G Trip
NON CLASS 1E COMPONENT(S): NR-C51-1R603C

COMPONENT ID	FAILURE MODE	LOCAL EFFECTS INCLUDING DEPENDENT FAILURES	SYSTEM EFFECTS	SINGLE FAILURE MET	REMARKS
CABLES in same raceways as cables to Non Class 1E Component	Impressed Voltage Faults on cables to Pressure Boundary instruments classified as Q	Loss of electronics to Pressure Boundary Instruments with cables in contact with NMIPE4112, NM1PQ4101	None	YES	Non Class 1E Loops not required for DBA or for EOPs Boundaries Maintained

R1

References:

M1-C51-20 Sh 6
M1-C51-19 SH 12
SEA-EE-180
NEDO 10139

CATEGORY
8

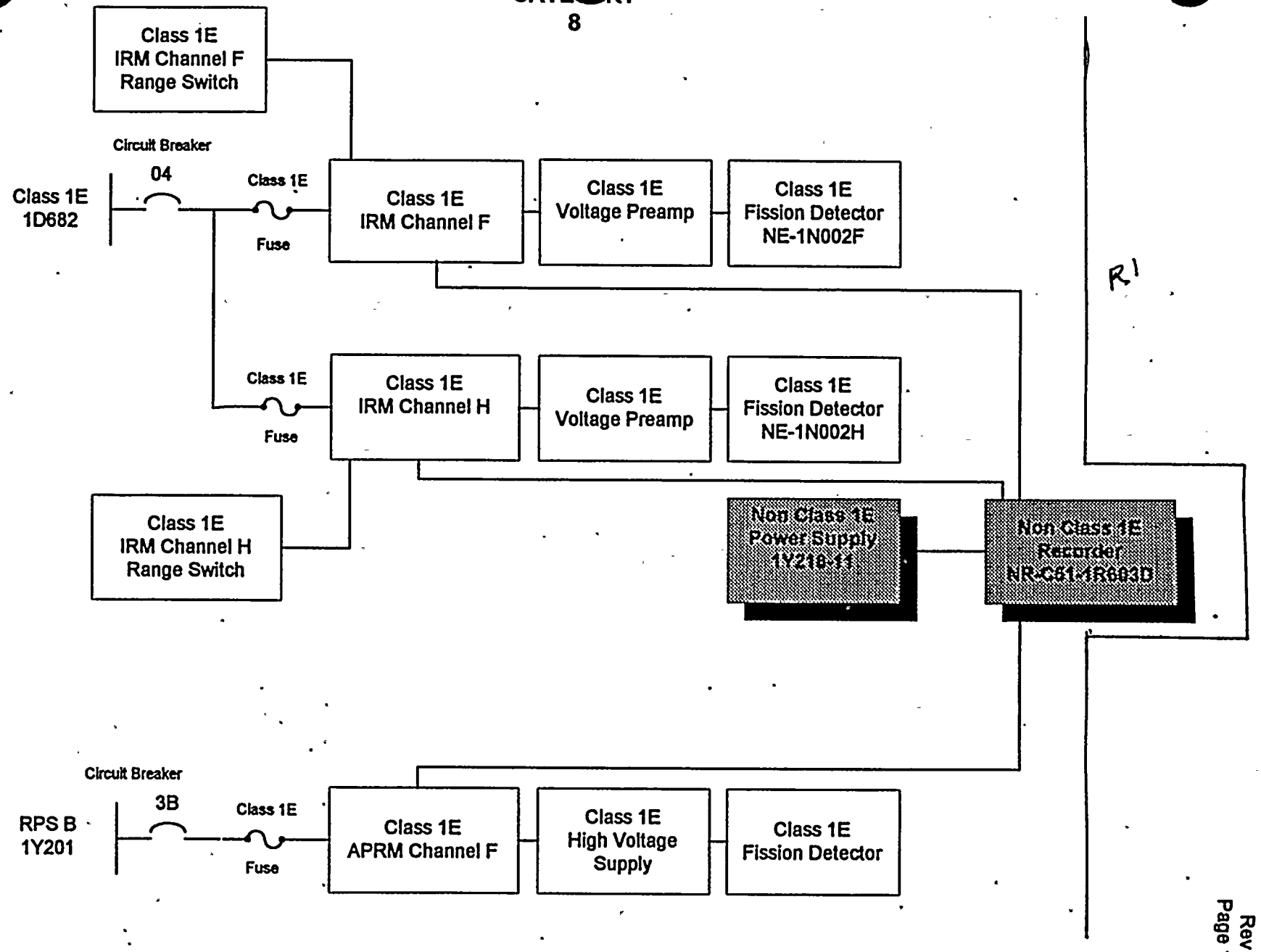

GE1CAT84.VSD

SAFETY FUNCTION: APRM CHANNEL F Trip and IRM CHANNELS F, H trip
NON CLASS 1E COMPONENT(S): NR-C51-1R603D

COMPONENT ID	FAILURE MODE	LOCAL EFFECTS INCLUDING DEPENDENT FAILURES	SYSTEM EFFECTS	SINGLE FAILURE MET	REMARKS	
NR-C51-1R603D (Non Class 1E)	Open Recorder	Loss of Recorder	None	YES	Recorder not required for DBA or for EOPs Provides Indication only	R1
	Short Recorder	Loss of Recorder	None	YES	Recorder not required for DBA or for EOPs Provides Indication only	R1
CABLES in same raceways as cables to Non Class 1E Component	Short cables to Neutron Mon Sys classified as Q	Loss of Recorders NR-C51-1R603A, B, C, D	None	YES	Recorders not required for DBA or for EOPs Provides Indication only	R1
		Loss of IRM Sel Sw A,B,C,D, E,F,H. IRM Channels Trip	Neutron Flux SCRAM	YES	Fails in safe direction	R1
	Short cables	Loss of Division II	None	YES	Division I available No Div I, Div I Aff or GE Div I/Non Sep associated cables in raceways	
	Short cables to transducers classified as Q & LPRMs	Loss of Computer Inputs	None	YES	Computer not required for DBA or for EOPs Provides Indication Only	R1
	Short cables to Presuure Boundary instrumehts classified as Q	Loss of Non Class 1E Instrument Loops	None	YES	Non Class 1E Loops not required for DBA or for EOPs Boundaries Maintained	R1

SAFETY FUNCTION: APRM CHANNEL F Trip and IRM CHANNELS F, H trip
NON CLASS 1E COMPONENT(S): NR-C51-1R603D

COMPONENT ID	FAILURE MODE	LOCAL EFFECTS INCLUDING DEPENDENT FAILURES	SYSTEM EFFECTS	SINGLE FAILURE MET	REMARKS	
CABLES in same raceways as cables to Non Class 1E Component	Open cables to Neutron Mon Sys classified as Q	Loss of Recorders NR-C51-1R603A, B, C, D	None	YES	Recorders not required for DBA or for EOPs Provides Indication only	R1
		Loss of IRM Sel Sw A,B,C,D, E,F,H. IRM Channels Trip	Neutron Flux SCRAM	YES	Fails in safe direction	R1
	Open cables	Loss of Division II	None	YES	Division I available No Div I, Div I Aff or GE Div I/Non Sep associated cables in raceways	
	Open cables to transducers classified as Q & LPRMs	Loss of Computer Inputs	None	YES	Computer not required for DBA or for EOPs Provides Indication Only	R1
	Open cables to Presuure Boundary instruments classified as Q	Loss of Non Class 1E Instrument Loops	None	YES	Non Class 1E Loops not required for DBA or for EOPs Boundaries Maintained	R1

SAFETY FUNCTION: APRM CHANNEL F Trip and IRM CHANNELS F, H trip
NON CLASS 1E COMPONENT(S): NR-C51-1R603D

COMPONENT ID	FAILURE MODE	LOCAL EFFECTS INCLUDING DEPENDENT FAILURES	SYSTEM EFFECTS	SINGLE FAILURE MET	REMARKS	
CABLES in same raceways as cables to Non Class 1E Component	Impressed voltage fault on cables to Neutron Mon Sys classified as Q	Loss of Recorder NR-C51-1R603A, B, C, D	None	YES	Recorders not required for DBA or for EOPs Provides Indication only	R1
		Spurious APRM & IRM Channel Trips	Neutron Flux SCRAM	YES	Fails in Safe Direction (See SEA-EE-180 Cat 4)	R1
		Loss of IRM Sel Sw A,B,C,D, E,F,H. IRM Channels Trip	Neutron Flux SCRAM	YES	Fails in safe direction	R1
	Impressed voltage fault on cables	Loss of Division II	None	YES	Division I available No Div I, Div I Aff or GE Div I/Non Sep associated cables in raceways	
	Impressed Voltage Fault on cables to transducers classified as Q	Loss of Computer Inputs	None	YES	Computer not required for DBA or for EOPs Provides Indication Only Impressed voltage does not propagate to input of transducers (See Appendix K)	R1
	Impressed Voltage Fault on cables to LPRMs	Spurious APRM Channel Trips	Neutron Flux SCRAM	YES	Fails in Safe Direction (See SEA-EE-180 Cat 4)	R1

SAFETY FUNCTION: APRM CHANNEL F Trip and IRM CHANNELS F, H trip
NON CLASS 1E COMPONENT(S): NR-C51-1R603D

COMPONENT ID	FAILURE MODE	LOCAL EFFECTS INCLUDING DEPENDENT FAILURES	SYSTEM EFFECTS	SINGLE FAILURE MET	REMARKS
CABLES in same raceways as cables to Non Class 1E Component	Impressed Voltage Faults on cables to Pressure Boundary instruments classified as Q	Loss of electronics to Pressure Boundary Instruments with cables in contact with NM1PE4101, NM1PDX01, NM1PDX02	None	YES	Non Class 1E Loops not required for DBA or for EOPs Boundaries Maintained

(R)

References:

M1-C51-20 Sh 7
M1-C51-19 SH 12
SEA-EE-180
NEDO 10139

APPENDIX I

SINGLE FAILURE ANALYSIS FOR CATEGORY 9 GE SUPPLIED NON CLASS 1E INSTRUMENTS CONNECTED TO Q CLASSIFIED INSTRUMENTS

CATEGORY
9

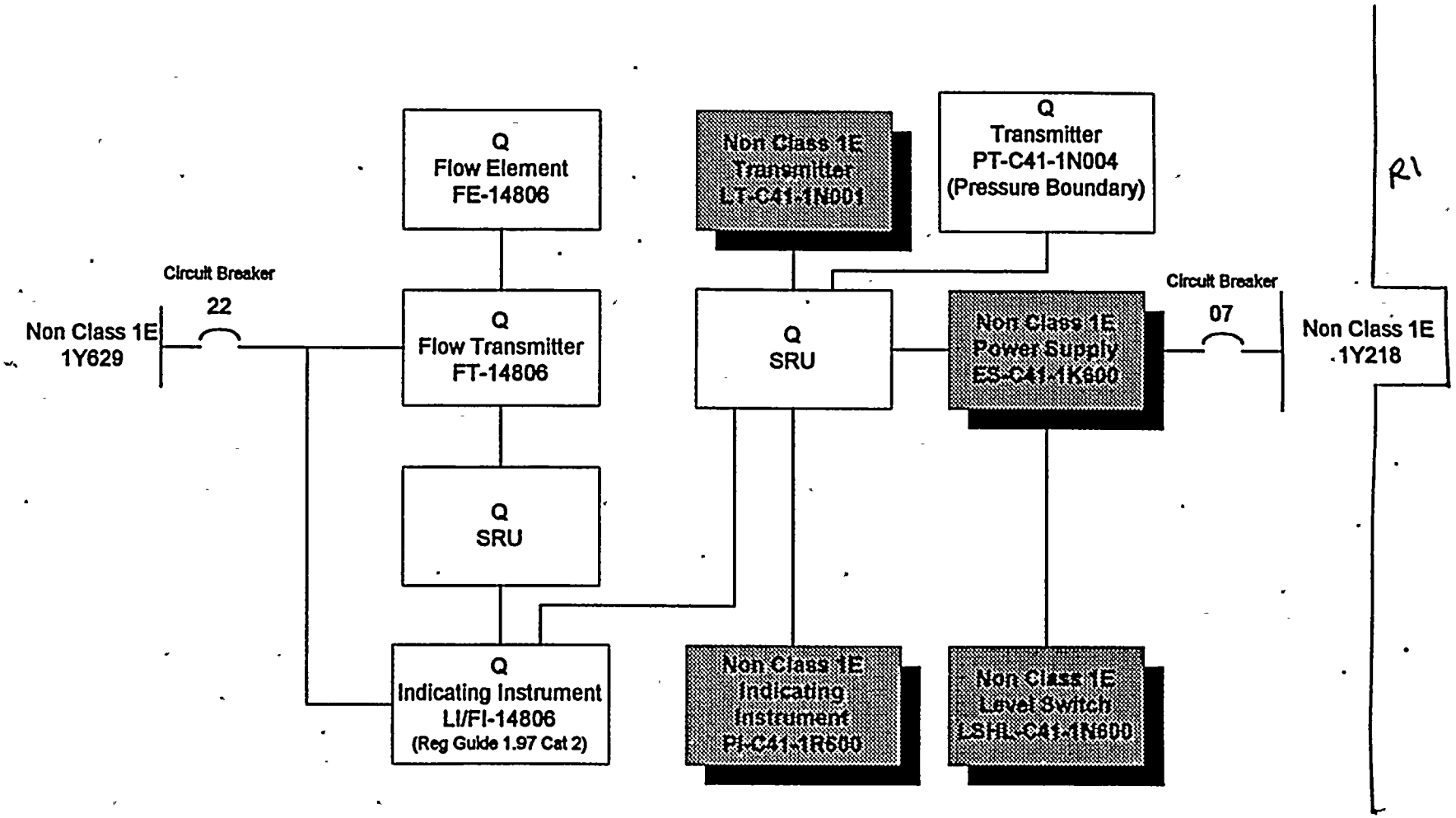

GE1CAT91.VSD

SAFETY FUNCTION: Standby Liquid Control Flow FE-14806, FT-14806, LI/FI-14806 (REG GUIDE 1.97)
NON CLASS 1E COMPONENTS: 1Y629-22, LT-C41-1N001, PI-C41-1R600

COMPONENT ID	FAILURE MODE	LOCAL EFFECTS INCLUDING DEPENDENT FAILURES	SYSTEM EFFECTS	SINGLE FAILURE MET	REMARKS
1Y629-22 Power Supply (Non Class 1E)	Open Non Class 1E Power Supply	Loss of Reg Guide 1.97 Cat 2 Instruments:			
		FE-14806	None	YES	Reg Guide 1.97 Cat 2 instruments do not require redundancy
		FT-14806	None	YES	
		LI/FI-14806	None	YES	
	Short Non Class 1E Power Supply	Loss of Reg Guide 1.97 Cat 2 Instruments:			
		FE-14806	None	YES	Reg Guide 1.97 Cat 2 instruments do not require redundancy
		FT-14806	None	YES	
		LI/FI-14806	None	YES	
ES-C41-1K600 Power Supply (1Y218-07) (Non Class 1E)	Open Non Class 1E Power Supply	Loss of Reg Guide 1.97 Cat 2 Instrument LI/FI-14806	None	YES	Reg Guide 1.97 Cat 2 instruments do not require redundancy
		Loss of PI-C41-1R600	None	YES	Indicator not required for DBA or for EOPs Provides Indication Only R1
	Short Non Class 1E Power Supply	Loss of Reg Guide 1.97 Cat 2 Instrument LI/FI-14806	None	YES	Reg Guide 1.97 Cat 2 instruments do not require redundancy
		Loss of PI-C41-1R600	None	YES	Indicator not required for DBA or for EOPs Provides Indication Only R1

SAFETY FUNCTION: Standby Liquid Control Flow FE-14806, FT-14806, LI/FI-14806 (REG GUIDE 1.97)
NON CLASS 1E COMPONENTS: 1Y629-22, LT-C41-1N001, PI-C41-1R600

COMPONENT ID	FAILURE MODE	LOCAL EFFECTS INCLUDING DEPENDENT FAILURES	SYSTEM EFFECTS	SINGLE FAILURE MET	REMARKS	
LT-C41-1N001 Level Transmitter (Non Class 1E)	Open transmitter	Loss of Reg Guide 1.97 Cat 2 Instrument LI/FI-14806	None	YES	Reg Guide 1.97 Cat 2 instruments do not require redundancy	
	Short transmitter	Loss of Reg Guide 1.97 Cat 2 Instrument LI/FI-14806	None	YES	Reg Guide 1.97 Cat 2 instruments do not require redundancy	
PI-C41-1R600 Pressure Indicator (Non Class 1E)	Open Indicator	Loss of Pressure Indication PI-C41-1R600	None	YES	Indicator not required for DBA or for EOPs Provides Indication Only	R1
	Open Indicator	Loss of Pressure Indication PI-C41-1R600	None	YES	Indicator not required for DBA or for EOPs Provides Indication Only	R1
CABLES in same raceways as cables to Non Class 1E Component	Open cables	Loss of Reg Guide 1.97 Cat 2 Instruments:				
		FE-14806 FT-14806 LI/FI-14806	None None None	YES YES YES	Reg Guide 1.97 Cat 2 instruments do not require redundancy	
		Loss of Pressure Indication PI-C41-1R600	None	YES	Indicator not required for DBA or for EOPs Provides Indication Only	R1
	Open cables to Pressure Boundary instruments classified as Q	Loss of Non Class 1E Instrument Loops	None	YES	Non Class 1E Loops not required for DBA or for EOPs Boundaries Maintained	R1

SAFETY FUNCTION: Standby Liquid Control Flow FE-14806, FT-14806, LI/FI-14806 (REG GUIDE 1.97)
NON CLASS 1E COMPONENTS: 1Y629-22, LT-C41-1N001, PI-C41-1R600

COMPONENT ID	FAILURE MODE	LOCAL EFFECTS INCLUDING DEPENDENT FAILURES	SYSTEM EFFECTS	SINGLE FAILURE MET	REMARKS	
CABLES in same raceways as cables to Non Class 1E Component	Open cables to transducers classified as Q	Loss of Computer Inputs	None	YES	Computer not required for DBA or for EOPs Provides Indication Only	R1
	Open cables NM0I1201C,F,G NM0I1202F,G	Loss of FR-01204	None	YES	Recorder not required for DBA or for EOPs Provides Indication Only	R1
	Short cables	Loss of Reg Guide 1.97 Cat 2 Instruments:				
		FE-14806	None	YES	Reg Guide 1.97 Cat 2 instruments do not require redundancy	
		FT-14806	None	YES		
		LI/FI-14806	None	YES		
		Loss of Pressure Indication PI-C41-1R600	None	YES	Indicator not required for DBA or for EOPs Provides Indication Only	R1
	Short cables to Pressure Boundary instruments classified as Q	Loss of Non Class 1E Instrument Loops	None	YES	Non Class 1E Loops not required for DBA or for EOPs Boundaries Maintained	R1

SAFETY FUNCTION: Standby Liquid Control Flow FE-14806, FT-14806, LI/FI-14806 (REG GUIDE 1.97)
NON CLASS 1E COMPONENTS: 1Y629-22, LT-C41-1N001, PI-C41-1R600

COMPONENT ID	FAILURE MODE	LOCAL EFFECTS INCLUDING DEPENDENT FAILURES	SYSTEM EFFECTS	SINGLE FAILURE MET	REMARKS	
CABLES in same raceways as cables to Non Class 1E Component	Short cables to transducers classified as Q	Loss of Computer Inputs	None	YES	Computer not required for DBA or for EOPs Provides Indication Only	R1
	Short cables NM0I1201C,F,G NM0I1202F,G	Continuous operation of FR-01204	None	YES	Recorder not required for DBA or for EOPs Provides Indication Only	R1
CABLES in same raceways as cables to Non Class 1E Component	Impressed Voltage Fault	Incorrect voltage to Reg Guide 1.97 Cat II Instruments				
		Incorrect/Loss of Output:				
		FE-14806	None	YES	Reg Guide 1.97 Cat 2 instruments do not require redundancy	
		FT-14806	None	YES		
		LI/FI-14806	None	YES		
		Incorrect/Loss of Pressure Indication PI-C41-1R600	None	YES	Indicator not required for DBA or for EOPs	R1

SAFETY FUNCTION: Standby Liquid Control Flow FE-14806, FT-14806, LI/FI-14806 (REG GUIDE 1.97)
NON CLASS 1E COMPONENTS: 1Y629-22, LT-C41-1N001, PI-C41-1R600

COMPONENT ID	FAILURE MODE	LOCAL EFFECTS INCLUDING DEPENDENT FAILURES	SYSTEM EFFECTS	SINGLE FAILURE MET	REMARKS	
CABLES in same raceways as cables to Non Class 1E Component	Impressed Voltage Faults on cables to Pressure Boundary instruments classified as Q	Loss of electronics to Pressure Boundary Instruments with cables in contact with NK1I4801B,C,D,E NM1Q0206D, NM1PC1301	None	YES	Non Class 1E Loops not required for DBA or for EOPs Boundaries Maintained	R1
	Impressed Voltage Fault on cables to transducers classified as Q	Loss of Computer Inputs	None	YES	Computer not required for DBA or for EOPs Provides Indication Only Impressed voltage does not propagate to input of transducers (See Appendix K)	R1
	Impressed Voltage fault on cables NM0I1201C,F,G NM0I1202F,G	Incorrect/Loss of operation of FR-01204	None	YES	Recorder not required for DBA or for EOPs Provides Indication Only	R1

References:

J-448 Sh 2	M1-C41-36 SH 1	Note FE-14806 is strapped to pipe. It is not pressure boundary	Note FE-14806, FT-14806, LI/FI-14806 Seismic Only
J-448 Sh 3	M-151 SH 1,3		
M-148 Sh 1	M-157 SH 1		

APPENDIX J

DEFINITIONS AND ABBREVIATIONS

RJ

DEFINITION: QUALITY ASSURANCE CODE.

CODES/ABBREVIATIONS: (2 CHARACTER FIELD)

Q = SAFETY-RELATED EQUIPMENT OR COMPONENTS. ALL ARE SUBJECT TO THE REQUIREMENTS OF THE SUSQ SES OPERATION QUALITY ASSURANCE PROGRAM.

A = NON-SAFETY-RELATED EQUIPMENT OR COMPONENTS (USUALLY PRESSURE RETAINING ITEMS AND PIPE SUPPORTS) WHICH WERE AND/OR MUST BE DESIGNED, PROCURED, CONSTRUCTED, AND MAINTAINED IN ACCORDANCE WITH THE ASME SECTION III AND SECTION XI REQUIREMENTS.

D = NON-SAFETY-RELATED EQUIPMENT OR COMPONENTS IN RADWASTE MANAGEMENT SYSTEMS WHICH ARE SUBJECT TO THE REQUIREMENTS OF NRC BRANCH TECHNICAL POSITION ESTB 11-1 AND NDI-QA-8.2.5, "GROUP-D AUGMENTED".

F = NON-SAFETY-RELATED FIRE PROTECTION EQUIPMENT AND COMPONENTS WHICH PROTECT SAFETY-RELATED EQUIPMENT AND ARE SUBJECT TO THE REQUIREMENTS OF NDI-QA-8.2.3 AND NDI-QA-15.3.1.

R = NON-SAFETY-RELATED EQUIPMENT OR COMPONENT WHICH ARE INVOLVED IN RADIOLOGICAL AND ENVIRONMENTAL MONITORING IN RESPONSE TO NDI-QA-8.2.4 AND REG. GUIDE 4.15. R1

S = NON-SAFETY-RELATED INSTRUMENTS, BUT WHOSE FAILURE UNDER DYNAMIC LOADS COULD PREVENT OTHER ITEMS FROM PERFORMING THEIR SAFETY-RELATED FUNCTION OR CAUSE INCAPACITATING INJURY TO MAIN CONTROL ROOM OCCUPANTS. NDI-QA-8.2.6.

N = NON-SAFETY-RELATED EQUIPMENT OR COMPONENTS WHICH ARE NOT SUBJECT TO THE REQUIREMENTS OF ANY OF THE ABOVE QUALITY ASSURANCE PROGRAMS.

? = UNKNOWN - NUCLEAR MODIFICATIONS TO DETERMINE.

DEFINITION: INSTRUMENT IDENTIFICATION NUMBER.

NOTE: INSTRUMENT LABELS, NAMEPLATES, PROCEDURES AND TAGGING IN THE FIELD MAY INCLUDE THE USE OF HYPHENS TO SEPARATE INSTRUMENT TYPE, GE SYSTEM NUMBER AND INSTRUMENT NUMBER THESE HYPHENS ARE NOT REFLECTED IN THE INSTRUMENT INDEX

TYPE	GE SYS	NUMBER
LT		20407C
XY	B21	1D004B

AAH	ANALYZER ALARM HIGH
AAHH	ANALYZER ALARM HI-HI
AAHL	ANALYZER ALARM HI-LO
AAL	ANALYZER ALARM LOW
AALL	ANALYZER ALARM LO-LO
AC	ANALYSIS CONTROLLER
AE	ANALYZER ELEMENT
AI	ANALYSIS INDICATOR
AIC	ANALYZER INDICATOR CONTROLLER
AISL	ANALYZER INDICATING SWITCH LOW
AIT	ANALYZER INDICATING TRANSMITTER
AITS	ANALYZER INDICATING TRANSMITTER SWITCH
AN	ANALYZER ELEMENT
AP	ANALYZER TEST CONNECTION
APRM	AVERAGE POWER RANGE MONITOR
AR	ANALYZER RECORDER
ARS	ANALYZER RECORDER SWITCH
ASH	ANALYZER SWITCH HIGH
ASHH	ANALYZER SWITCH HI-HI
ASHL	ANALYZER SWITCH HI-LO
ASL	ANALYZER SWITCH LOW
AT	ANALYZER TRANSMITTER
AX	ISOLATION DIAPHRAGM
AY	ANALYZER SIGNAL CONDITIONER
BDD	BACKDRAFT DAMPER
BDID	BACKDRAFT ISOLATION DAMPER
CAH	CONDUCTIVITY ALARM HIGH
CAHH	CONDUCTIVITY ALARM HI-HI
CAHL	CONDUCTIVITY ALARM HI-LO
CAL	CONDUCTIVITY ALARM LOW
CE	CONDUCTIVITY ELEMENT
CI	CONDUCTIVITY INDICATOR
CIC	CONDUCTIVITY INDICATOR CONTROLLER
CIS	CONDUCTIVITY INDICATOR SWITCH
CISH	CONDUCTIVITY INDICATOR SWITCH HIGH
CIT	CONDUCTIVITY INDICATOR TRANSMITTER
CITS	CONDUCTIVITY INDICATOR TRANSMITTER SWITCH
CITSH	CONDUCTIVITY INDICATOR TRANSMITTER SWITCH HIGH
CR	CONDUCTIVITY RECORDER
CRS	CONDUCTIVITY RECORDER SWITCH
CSH	CONDUCTIVITY SWITCH HIGH
CSHH	CONDUCTIVITY SWITCH HI HI
CSHL	CONDUCTIVITY SWITCH HI-LO
CSL	CONDUCTIVITY SWITCH LOW
CY	CONDUCTIVITY SIGNAL CONDITIONER

R1

DAHL	DENSITY ALARM HI-LO
DCAC	DC TO AC INVERTED
DE	DENSITY ELEMENT
DIR	DENSITY INDICATING RECORDER
DS	DENSITY SWITCH
DSHL	DENSITY SWITCH HI-LO
DT	DENSITY TRANSMITTER
E/I	VOLTAGE TO CURRENT TRANSFORMER
EP	ELECTRICAL SURGE PROTECTOR
ES	POWER SUPPLY
EY	ELECTRICAL SIGNAL CONDITIONER
FAH	FLOW ALARM HIGH
FAHL	FLOW ALARM HI-LO
FAL	FLOW ALARM LOW
FALL	FLOW ALARM LO-LO
FC	FLOW CONTROLLER
FD	FLOW DIFFERENTIAL
FDAH	FLOW DIFFERENTIAL ALARM HI
FDI	FLOW DIFFERENTIAL INDICATOR
FDM	FLOW DIFFERENTIAL MONITOR
FDR	FLOW DIFFERENTIAL RECORDER
FDSH	FLOW DIFFERENTIAL SWITCH HIGH
FDSL	FLOW DIFFERENTIAL SWITCH LOW
FE	FLOW ELEMENT
FG	FLOW GLASS
FI	FLOW INDICATOR
FIC	FLOW INDICATING CONTROLLER
FICS	FLOW INDICATING CONTROLLER SWITCH
FIS	FLOW INDICATING SWITCH
FISH	FLOW INDICATING SWITCH HIGH
FISHL	FLOW INDICATING SWITCH HIGH LOW
FISL	FLOW INDICATING SWITCH LOW
FIT	FLOW INDICATING TRANSMITTER
FO	FLOW ORIFICE
FP	FLOW CONNECTION
FQ	FLOW COUNTER
FQAH	FLOW COUNTER ALARM HIGH
FQI	FLOW COUNTER INDICATOR
FQIS	FLOW COUNTER INDICATOR SWITCH
FQR	FLOW COUNTER RECORDER
FQS	FLOW COUNTER SWITCH
FQSH	FLOW COUNTER SWITCH HIGH
FR	FLOW RECORDER
FRC	FLOW RECORDER COUNTER
FRCS	FLOW RECORDER COUNTER SWITCH
FRS	FLOW RECORDER SWITCH
FRSH	FLOW RECORDER SWITCH HIGH
FS	FLOW SWITCH
FSC	FLOW SIGNAL CALIBRATOR
FSH	FLOW SWITCH HIGH
FSHL	FLOW SWITCH HI-LO
FSL	FLOW SWITCH LOW
FSLL	FLOW SWITCH LO-LO
FSO	FLOW SIGNAL,OUTPUT DEVICE
FT	FLOW TRANSMITTER
FU	FLOW UNIT
FX	FLOW UNCLASSIFIED
FY	FLOW SIGNAL CONDITIONER

R1

HC	HAND CONTROLLER
HD	HAND DAMPER
HDM	HAND DAMPER REMOTE OPERATOR
HIC	HAND INDICATING CONTROLLER
HS	HAND SWITCH
HSE	HAND SWITCH ELECTRICAL
HSS	HAND SELECT SWITCH
HSX	HAND SWITCH SPECIAL
HY	HAND SIGNAL CONDITIONER
HZ	HAND POSITION
IRM	INTERMEDIATE RANGE MONITOR
KA	RADIATION DETECTION
KC	TIME CONTROLLER
KCS	TIME CONTROLLER SWITCH
KI	TIME INDICATOR
KS	TIME SWITCH
KSS	TIME SPEED SWITCH
KY	TIME SIGNAL CONDITIONER
LAH	LEVEL ALARM HIGH
LAHH	LEVEL ALARM HI-HI
LAHHH	LEVEL ALARM HI-HI-HI
LAHL	LEVEL ALARM HI-LO
LAL	LEVEL ALARM LOW
LALL	LEVEL ALARM LO-LO
LC	LEVEL CONTROLLER
LDAH	LEVEL DIFFERENTIAL ALARM HIGH
LDAHH	LEVEL DIFFERENTIAL ALARM HI-HI
LDIS	LEVEL DIFFERENTIAL INDICATOR SWITCH
LDISH	LEVEL DIFFERENTIAL INDICATOR SWITCH HIGH
LDS	LEVEL DIFFERENTIAL SWITCH
LE	LEVEL ELEMENT
LG	LEVEL GLASS
LI	LEVEL INDICATOR
LIC	LEVEL INDICATOR CONTROLLER
LIS	LEVEL INDICATOR SWITCH
LISHL	LEVEL INDICATOR SWITCH HI-LO
LISL	LEVEL INDICATOR SWITCH LO
LIT	LEVEL INDICATOR TRANSMITTER
LITS	LEVEL INDICATOR TRANSMITTER SWITCH
LI/FI	LEVEL INDICATOR/FLOW INDICATOR
LP	LEVEL CONNECTION
LR	LEVEL RECORDER
LR/FR	LEVEL RECORDER/FLOW RECORDER
LR/PR	LEVEL RECORDER/PRESSURE RECORDER
LS	LEVEL SWITCH
LSH	LEVEL SWITCH HIGH
LSHH	LEVEL SWITCH HI-HI
LSHHH	LEVEL SWITCH HI-HI-HI
LSHL	LEVEL SWITCH HI-LO
LSL	LEVEL SWITCH LOW
LSLL	LEVEL SWITCH LO-LO
LT	LEVEL TRANSMITTER
LY	LEVEL SIGNAL CONDITIONER
LZ	RFPT SPEED CONTROLLER
MAH	MOISTURE ALARM HIGH
MAL	MOISTURE ALARM LOW
MC	MOISTURE CONTROLLER
ME	MOISTURE ELEMENT

R1

MI	MOISTURE INDICATOR
MISH	MOISTURE INDICATOR SWITCH HIGH
MISHL	MOISTURE INDICATOR SWITCH HI-LO
MISL	MOISTURE INDICATOR SWITCH LOW
MITS	MOISTURE INDICATOR TRANSMITTER SWITCH
MR	MOISTURE RECORDER
MSH	MOISTURE SWITCH HIGH
MSL	MOISTURE SWITCH LOW
MT	MOISTURE TRANSMITTER
MTS	MOISTURE TRANSMITTER SWITCH
MY	MOISTURE SIGNAL CONDITIONER
NA	NEUTRON FLUX SIGNAL AMPLIFIER
NAV	NEUTRON FLUX SIGNAL AVERAGING
NB	NEUTRON FLUX SIGNAL BIAS
NE	NEUTRON FLUX ELEMENT
NFC	NEUTRON FLUX SIGNAL COMPARATOR
NI	NEUTRON FLUX INDICATOR
NIS	NEUTRON FLUX INDICATING SWITCH
NIT	NEUTRON FLUX INDICATING TRANSMITTER
NL	NEUTRON FLUX SIGNAL LOGIC
NM	NEUTRON FLUX SIGNAL MULTIPLEXER
NO	NEUTRON FLUX SIGNAL OUTPUT/INPUT
NR	NEUTRON FLUX RECORDER
NT	NEUTRON FLUX TRANSMITTER
NV	NEUTRON FLUX SIGNAL SUMMER
NX	NEUTRON FLUX SIGNAL CALIBRATOR
NY	NEUTRON FLUX SIGNAL CONDITIONER
PAH	PRESSURE ALARM HIGH
PAHL	PRESSURE ALARM HI-LO
PAL	PRESSURE ALARM LOW
PALL	PRESSURE ALARM LO-LO
PC	PRESSURE CONTROLLER
PD	PRESSURE DIFFERENTIAL
PDAH	PRESSURE DIFFERENTIAL ALARM HIGH
PDAHL	PRESSURE DIFFERENTIAL ALARM HI-LO
PDAL	PRESSURE DIFFERENTIAL ALARM LOW
PDC	PRESSURE DIFFERENTIAL CONTROLLER
PDCV	PRESS. DIFF. CONTROL VALVE (SELF ACTUATED)
PDD	PRESS. DIFF. DAMPER
PDDM	PRESS. DIFF. DAMPER OPERATOR
PDI	PRESSURE DIFFERENTIAL INDICATOR
PDIC	PRESSURE DIFFERENTIAL INDICATOR CONTROLLER
PDIS	PRESSURE DIFFERENTIAL INDICATOR SWITCH
PDISH	PRESSURE DIFFERENTIAL INDICATOR SWITCH HIGH
PDIT	PRESSURE DIFFERENTIAL INDICATOR TRANSMITTER
PDM	PRESSURE DIFFERENTIAL REMOTE OPERATOR
PDR	PRESSURE DIFFERENTIAL RECORDER
PDS	PRESSURE DIFFERENTIAL SWITCH
PDSH	PRESSURE DIFFERENTIAL SWITCH HIGH
PDSHH	PRESSURE DIFFERENTIAL SWITCH HI-HI
PDSHL	PRESSURE DIFFERENTIAL SWITCH HI-LO
PDSL	PRESSURE DIFFERENTIAL SWITCH LOW
PDSLL	PRESSURE DIFFERENTIAL SWITCH LO-LO
PDT	PRESSURE DIFFERENTIAL TRANSMITTER
PDY	PRESSURE DIFFERENTIAL SIGNAL CONTROLLER
PE	PRESSURE ELEMENT
PI	PRESSURE INDICATOR
PIC	PRESSURE INDICATING CONTROLLER

R1

PIS	PRESSURE INDICATOR SWITCH
PISHL	PRESSURE INDICATOR SWITCH HI-LO
PIT	PRESSURE INDICATING TRANSMITTER
PP	PRESSURE CONNECTION
PR	PRESSURE RECORDER
PS	PRESSURE SWITCH
PSD	PRESSURE SWITCH DIFFERENTIAL
PSE	PRESSURE SAFETY ELEMENT
PSH	PRESSURE SWITCH HIGH
PSHH	PRESSURE SWITCH HI-HI
PSHL	PRESSURE SWITCH HI-LO
PSL	PRESSURE SWITCH LOW
PSLL	PRESSURE SWITCH LO-LO
PSV	PRESSURE SAFETY RELIEF VALVE
PT	PRESSURE TRANSMITTER
PY	PRESSURE SIGNAL CONDITIONER
QQI	TIME/QUALITY INDICATOR
RA	RADIATION ALARM
RAH	RADIATION ALARM HIGH
RAHH	RADIATION ALARM HI-HI
RAL	RADIATION ALARM LOW
RBM	ROD BLOCK MONITOR
RE	RADIATION ELEMENT
RI	RADIATION INDICATOR
RIS	RADIATION INDICATOR SWITCH
RISH	RADIATION INDICATOR SWITCH HIGH
RISHH	RADIATION INDICATOR SWITCH HI-HI
RIT	RADIATION INDICATOR TRANSMITTER
RITS	RADIATION INDICATOR TRANSMITTER SWITCH
RP	RADIATION TEST CONNECTION
RQI	RADIATION COUNTER INDICATOR
RQRR	RADIATION COUNTER TOTALIZING RECORDER
RR	RADIATION RECORDER
RSH	RADIATION SWITCH HIGH
RT	RADIATION TRANSMITTER
RW	RADIATION WELL
RY	RADIATION SIGNAL CONDITIONER
RYS	RADIATION CONTROLLER SWITCH
SAH	SPEED ALARM HIGH
SAHH	SPEED ALARM HIGH HIGH
SAL	SPEED ALARM LOW
SC	SPEED CONTROLLER
SE	SPEED ELEMENT
SG	SPEED GAUGE
SI	SPEED INDICATOR
SI/KR	TACHOMETER
SIC	SPEED INDICATOR CONTROLLER
SIS	SPEED INDICATOR SWITCH
SISH	SPEED INDICATOR SWITCH HIGH
SRM	SOURCE RANGE MONITOR
SS	SPEED SWITCH
SSH	SPEED SWITCH HIGH
SSL	SPEED SWITCH LOW
SST	INFRARED SENSOR
SSX	SPEED SWITCH MISCELLANEOUS
ST	SPEED TRANSMITTER
STS	SPEED TRANSMITTER SWITCH
SV	SOLENOID VALVE

RI

SX	SOLENOID DEVICE
SY	SPEED SIGNAL CONDITIONER
TAH	TEMPERATURE ALARM HIGH
TAHH	TEMPERATURE ALARM HI-HI
TAHHH	TEMPERATURE ALARM HI-HI-HI
TAHL	TEMPERATURE ALARM HI-LO
TAL	TEMPERATURE ALARM LOW
TALL	TEMPERATURE ALARM LO-LO
TC	TEMPERATURE CONTROLLER
TD	TEMPERATURE DIFFERENTIAL
TDAH	TEMPERATURE DIFFERENTIAL ALARM HIGH
TDAHL	TEMPERATURE DIFFERENTIAL ALARM HI-LO
TDAL	TEMPERATURE DIFFERENTIAL ALARM LOW
TDIC	TEMP. DIFFERENTIAL INDICATOR CONTROLLER
TDM	TEMP. DIFFERENTIAL REMOTE OPERATOR
TDRS	TEMPERATURE DIFFERENTIAL RECORDER SWITCH
TDS	TEMPERATURE DIFFERENTIAL SWITCH
TDSH	TEMPERATURE DIFFERENTIAL SWITCH HIGH
TDSHL	TEMPERATURE DIFFERENTIAL SWITCH HI-LO
TDSL	TEMPERATURE DIFFERENTIAL SWITCH LOW
TDT	TEMPERATURE DIFFERENTIAL TRANSMITTER
TDY	TEMPERATURE DIFFERENTIAL CONTROLLER
TE	TEMPERATURE ELEMENT
TI	TEMPERATURE INDICATOR
TIAH	TEMPERATURE INDICATOR ALARM HIGH
TIC	TEMPERATURE INDICATOR CONTROLLER
TIS	TEMPERATURE INDICATOR SWITCH
TISC	TEMPERATURE INDICATOR SWITCH CONTROLLER
TISH	TEMPERATURE INDICATOR SWITCH HIGH
TIT	TEMPERATURE INDICATING TRANSMITTER
TP	TEMPERATURE CONNECTION
TR	TEMPERATURE RECORDER
TRS	TEMPERATURE RECORDER SWITCH
TRSH	TEMPERATURE RECORDER SWITCH HIGH
TS	TEMPERATURE SWITCH
TSH	TEMPERATURE SWITCH HIGH
TSHH	TEMPERATURE SWITCH HI-HI
TSHL	TEMPERATURE SWITCH HI-LO
TSL	TEMPERATURE SWITCH LOW
TSLL	TEMPERATURE SWITCH LO-LO
TSLZ	BEARING TEMPERATURE SWITCH
TSS	TEMPERATURE ELEMENT SELECTOR SWITCH
TT	TEMPERATURE TRANSMITTER
TW	TEMPERATURE WELL
TX	TEMPERATURE UNCLASSIFIED
TY	TEMPERATURE SIGNAL CONDITIONER
TZ	TEMPERATURE POSITION
UCIS	MULTIVARIABLE CONTROLLER INDICATOR SWITCH
UCS	MULTIVARIABLE CONTROLLER SWITCH
UIC	MULTIVARIABLE INDICATOR CONTROLLER
UR	MULTIVARIABLE RECORDER (DATALOGGER)
VAH	VIBRATION ALARM HIGH
VAHH	VIBRATION ALARM HI-HI
VAL	VIBRATION ALARM LOW
VE	VIBRATION ELEMENT
VI	VIBRATION INDICATOR
VIS	VIBRATION INDICATOR SWITCH
VISH	VIBRATION INDICATOR SWITCH HIGH

R1

VR	VIBRATION RECORDER
VRS	VIBRATION RECORDER SWITCH
VRSH	VIBRATION RECORDED SWITCH HIGH
VS	VIBRATION SWITCH
VSH	VIBRATION SWITCH HIGH
VSHH	VIBRATION SWITCH HI-HI
VT	VIBRATION TRANSMITTER
VX	VIBRATION UNCLASSIFIED.
VY	VIBRATION SIGNAL CONDITIONER
WE	LOAD CELL
WI	WEIGHT INDICATOR
WS	WEIGHT SWITCH
WSH	WEIGHT SWITCH HIGH
WSHH	WEIGHT SWITCH HI-HI
WSL	WEIGHT SWITCH LOW
WSLL	WEIGHT SWITCH LO-LO
WT	WEIGHT TRANSMITTER
XA	UNCLASSIFIED ALARM
XAH	UNCLASSIFIED ALARM HIGH
XAL	UNCLASSIFIED ALARM LOW
XD	UNCLASSIFIED DIFFERENTIAL
XDT	TELEMETRY DELTA-T TRANSMITTER
XE	UNCLASSIFIED ELEMENT
XFR	TELEMETRY FLOW RECORDER
XFT	TELEMETRY FLOW TRANSMITTER
XI	NSSS/RPS-ELECTRICAL INDICATORS
XIR	TELEMETRY INDICATOR RECORDER
XISH	TELEMETRY INDICATOR SWITCH HIGH
XIT	TELEMETRY INDICATING TRANSMITTER
XLE	RAIN FALL ELEMENT
XLR	RAIN FALL RECORDER
XLT	SPECIAL LEVEL TRANSMITTER
XME	DEW POINT ELEMENT
XMT	DEW POINT TRANSMITTER
XO	VARIABLE RESTRICTING ORIFICE
XP	TEST POINT
XR	SPECIAL RECORDER
XRSH	SPECIAL RECORDER SWITCH HIGH
XS	SPECIAL SWITCH
XSE	WIND SPEED ELEMENT
XSH	UNCLASSIFIED SWITCH HIGH
XSHL	UNCLASSIFIED SWITCH HI-LO
XSL	UNCLASSIFIED SWITCH LOW
XST	WIND SPEED TRANSMITTER
XTR	TELEMETRY RECEIVER
XTT	SPECIAL TRANSMITTER
XXE	WIND DIRECTION ELEMENT
XXT	WIND DIRECTION TRANSMITTER
XY	SPECIAL SIGNAL CONDITIONER
XYIR	ILRT - AUTO SCANNER
YS	DRAIN PIPE
YY	VOLTAGE REGULATOR
ZA	SPECIAL ALARM
ZAX	POSITION ALARM TRANSMITTER
ZC	POSITION CONTROLLER
ZE	POSITION ELEMENT
ZI	POSITION INDICATOR
ZISH	POSITION INDICATOR SWITCH HIGH

R1

R1.

ZS	POSITION SWITCH
ZT	POSITION TRANSMITTER
ZY	POSITION SIGNAL CONDITIONER

APPENDIX K

EVALUATION OF Q LOADS IN CABLES IN CONTACT WITH GE NON CLASS 1E INSTRUMENTS

D

EVALUATION

A review of all the cables that come in contact with cables containing GE affiliated instrument circuits in the raceway system was performed. The Q Separation Group devices connected to cables that come in contact with the GE supplied instrument circuit cables are transducers, instruments which are part of the primary coolant pressure boundary, qualified electrical isolators, thermocouples and RTDs which are classified as safety related. These devices are evaluated below except for qualified electrical isolators. Also if there is a separate Single Failure Analysis for specific Q Separation devices, these devices are not evaluated as cables that come in contact with cables containing GE affiliated instrument circuits

Transducers

GE Type 4701 and 4722 series transducers are connected to cables that come in contact with GE affiliated instrument circuits in the raceway system.

The Type 4722 series transducers are designed with a linear input transformer and a solid-state output amplifier. The worst effect of an impressed voltage fault is that the junctions in the solid-state output amplifier would open due to overloading. This results in loss of the transducers. This fault does not propagate to the input of the transducer. Therefore, there are no adverse effects to the transducer input circuit.

Open circuits or short circuits in the output circuit of the transducer results in the loss of the transducer output. These faults have no effects to the input of the transducer. Therefore, there are no adverse effects to the transducer input circuit.

The Type 4701 transducers are designed with an input transformer, a rectifier bridge with two diodes and two zener diodes and an adjustable load resistor. The worst effect of an impressed voltage fault is that the zener diodes breakdown which short-circuits the secondary of the input transformer which results in the loss of the transducer output. This feature was designed into the transducers to protect it from high output voltages. Therefore, there are no adverse effects to the transducer input circuit.

D

Open circuits or short circuits in the output circuit of the transducer results in the loss of the transducer output. These faults have no effects to the input of the transducer. Therefore, there are no adverse effects to the transducer input circuit.

Primary Coolant Pressure Boundaries

The instruments that are part of the primary coolant boundary are Rosemount transmitters. This type of transmitter has an isolating diaphragm device. Process pressure is transmitted through the isolating diaphragm and silicone oil fill fluid to a sensing diaphragm in the center of the cell. The reference pressure is transmitted in a like manner to the other side of the sensing diaphragm. The position of the sensing diaphragm is detected by the capacitance plates on both sides of the sensing diaphragm. The sensor is driven by an oscillator at approximately 50 kHz and 50 Vpp. It is then rectified through a demodulator.

For impressed voltage faults on the transmitter output leads, the transmitter electronics which are in a separate housing from the isolating diaphragm can be damaged and the signal from the transmitter may no longer function. However, the isolating diaphragm will not be damaged and pressure boundary of the transmitter remains functional.

Shorting and opening of the transmitter output leads have no effect on the isolating diaphragm. Therefore, the pressure boundary of the transmitter remains functional.

Qualified Electrical Isolators

L

The installed Gamma Metrics electrical isolators are Gamma Metrics part number 200526-103. These isolators prevent impressed voltages on the Non Class 1E output from affecting the Class 1E input by use of optic isolation. Therefore, there is no adverse effects to the transducer input circuit.

Open circuits or short circuits in the output circuit of the isolators result in the loss of the output. These faults have no affects to the input of the isolator. Therefore, there is no adverse effects to the input circuit.

RTDs

The RTDs are classified as Q with seismic qualification only. These RTDs are externally connected to safety related piping and must maintain the integrity of the piping. A failure of the RTD internal elements does not effect the piping. For a seismic event, there is no failure mode for the RTDs since the RTDs are seismically qualified. Therefore, there is no adverse effects to the safety related piping due to failure of the RTD elements. These RTDs do not perform any Class E safety function.

Thermocouples

The Electric Hydrogen Recombiner System (EHRS) "Q" thermocouples are connected to Temperature Readouts located on the Control Panels. Per IOM 52 paragraph 1-7, The Temperature Readout is a Honeywell Industries temperature controller model Number R7351-A. It provides a method for monitoring the temperature in the heater section of the Recombiner Unit via the selector switch and the thermocouples. The unit is also equipped with an automatic temperature control circuit and controls the temperature of the unit when the temperature control selector switch is in AUTO. The EHRS does not require any instrumentation inside containment for proper operation after a LOCA. The thermocouples are provided for convenience in testing and periodic checkout; however they are not considered necessary to assure proper operation of the recombiner.

Basically, proper recombiner operation after an accident is assured by measuring the amount of electric power to the Recombiner Unit from the control panel. The temperature readout device is monitoring unit, not a control unit.

APPENDIX L

Q LOADS IN CABLES IN CONTACT WITH GE NON CLASS 1E INSTRUMENTS

Q Loads in Contact with TDRS-G33-1N605 (DIV I)

CABLES	DWG	SH	FROM	SEPGR(FRM)	TO	SEPGR(TO)	ISOLATED
AM0G2401C	E-023	006	Ch A (Frequency Tranducer)	Q	Ch A (XI-00034A)	Q	
AM1Q0701C	E-168	002	Ch A (Thermocouple)	Q	Ch A (Temp Sw to Iso Logic)	Q	
AM1Q0701D	E-168	002	Ch A (Thermocouple)	Q	Ch A (Temp Sw to Iso Logic)	Q	
AM1Q0701E	E-168	002	Ch A (Thermocouple)	Q	Ch A (Temp Sw to Iso Logic)	Q	
AM1Q0701F	E-168	002	Ch A (Thermocouple)	Q	Ch A (Temp Sw to Iso Logic)	Q	
AM1Q0701G	E-168	002	Ch A (Thermocouple)	Q	Ch A (Temp Sw to Iso Logic)	Q	
AM1Q0701H	E-168	002	Ch A (Thermocouple)	Q	Ch A (Temp Sw to Iso Logic)	Q	
AM1Q0701J	E-168	002	Ch A (Thermocouple)	Q	Ch A (Temp Sw to Iso Logic)	Q	
AM1Q0701K	E-168	002	Ch A (Thermocouple)	Q	Ch A (Temp Sw to Iso Logic)	Q	
AM1Q0701L	E-168	002	Ch A (Thermocouple)	Q	Ch A (Temp Sw to Iso Logic)	Q	R1
AM1Q0701M	E-168	002	Ch A (Thermocouple)	Q	Ch A (Temp Sw to Iso Logic)	Q	
AM1Q0701N	E-168	002	Ch A (Thermocouple)	Q	Ch A (Temp Sw to Iso Logic)	Q	
AM1Q0701P	E-168	002	Ch A (Thermocouple)	Q	Ch A (Temp Sw to Iso Logic)	Q	
AM1Q0701R	E-168	002	Ch A (Thermocouple)	Q	Ch A (Temp Sw to Iso Logic)	Q	
AM1Q0701S	E-168	002	Ch A (Thermocouple)	Q	Ch A (Temp Sw to Iso Logic)	Q	
AM1Q0701U	E-168	002	Ch A (Thermocouple)	Q	Ch A (Temp Sw to Iso Logic)	Q	
AM1Q0701V	E-168	002	Ch A (Thermocouple)	Q	Ch A (Temp Sw to Iso Logic)	Q	
AM1Q0701W	E-168	002	Ch A (Thermocouple)	Q	Ch A (Temp Sw to Iso Logic)	Q	
AM1Q0702C	E-168	001	Ch A (Thermocouple)	Q	Ch A (Temp Switch to Iso Logic)	Q	

Q Loads in Contact with TDRS-G33-1N605 (DIV I)

CABLES	DWG	SH	FROM	SEPGR(FRM)	TO	SEPGR(TO)	ISOLATED
AM1Q0702D	E-168	001	Ch A (Thermocouple)	Q	Ch A (Temp Switch to Iso Logic)	Q	
AM1Q0702E	E-168	001	Ch A (Thermocouple)	Q	Ch A (Temp Switch to Iso Logic)	Q	
AM1Q0702F	E-168	001	Ch A (Thermocouple)	Q	Ch A (Temp Switch to Iso Logic)	Q	
AM1Q0702G	E-168	001	Ch A (Thermocouple)	Q	Ch A (Temp Switch to Iso Logic)	Q	
AM1Q0702H	E-168	001	Ch A (Thermocouple)	Q	Ch A (Temp Switch to Iso Logic)	Q	
AM1Q0702J	E-168	001	Ch A (Thermocouple)	Q	Ch A (Temp Switch to Iso Logic)	Q	
AM1Q0702K	E-168	001	Ch A (Thermocouple)	Q	Ch A (Temp Switch to Iso Logic)	Q	
AM1Q0702L	E-168	001	Ch A (Thermocouple)	Q	Ch A (Temp Switch to Iso Logic)	Q	
AM1Q0702M	E-168	001	Ch A (Thermocouple)	Q	Ch A (Temp Switch to Iso Logic)	Q	R1
AM1Q0702N	E-168	001	Ch A (Thermocouple)	Q	Ch A (Temp Switch to Iso Logic)	Q	
AM1Q0702P	E-168	001	Ch A (Thermocouple)	Q	Ch A (Temp Switch to Iso Logic)	Q	
AM1Q0702R	E-168	001	Ch A (Thermocouple)	Q	Ch A (Temp Switch to Iso Logic)	Q	
AM1Q0702S	E-168	001	Ch A (Thermocouple)	Q	Ch A (Temp Switch to Iso Logic)	Q	
AM1Q0702T	J-401	012	Ch A (TE-10100A)	Q	Ch A (TSH-10100A)	Q	
AM1Q0702U	J-401	012	Ch A (TE-10100B)	Q	Ch A (TSH-10100B)	Q	
EM0I1101D	J-411	002	Div I (PT-01107A)	Q	Div I (PI-01107A)	Q	
EM0I1101E	J-411	002	Div I (FT-01109A)	Q	Div I (FY-01109A1)	Q	
EM0I1104F	J-411	005	Div I (TE-01106A)	Q	Div I (TT-01106A)	Q	
EM1I1211C	J-451	015	Div I (TE-E11-1N027A (RTD))	Q	Div I (TT-15127A)	Q	

CABLES	DWG	SH	FROM	SEPGR(FRM)	TO	SEPGR(TO)	ISOLATED
EM1I1211D	J-451	015	Div I (TT-15127A)	Q	Div I (TI-15127A)	Q	
EM1I2603C	J-426	003	Div I (PY-12644A)	Q	Div I (PT-12644)	Q	
EM1I2603D	J-426	003	Div I (PY-12644)	Q	Div I (PT-12644)	Q	
EM1I4202D	J-442	001	Div I (LT-14201A)	Q	Div I (LY-14201A)	Q	
EM1I4202E	J-442	001	Div I (LT-14203A)	Q	Div I (LY-14203A)	Q	
EM1I4202H	J-442	001	Div I (LT-14203A)	Q	Div I (LI-14203A)	Q	
EM1I4202J	J-442	001	Div I (LT-14202A)	Q	Div I (LR-14202)	Q	
EM1I4202L	J-442	001	Div I (LT-14202A)	Q	Div I (LY-14202A)	Q	
EM1I4202M	J-442	001	Div I (PT-14201A)	Q	Divi I (1C651)	Q	
EM1I4202N	J-442	001	Div I (LT-14203A)	Q	Div I (LI-14201A1)	Q	
EM1I5101D	J-470	002	Div I (FT-15120A)	Q	Div I (FY-15120A)	Q	
EM1I5101E	J-470	002	Div I (FT-15121A)	Q	Div I (FY-15121A)	Q	
EM1I5101F	J-470	002	Div I (FY-15120A)	Q	Div I (FI-15120A)	Q	
EM1I5701C	J-457	002	Div I (LT-15776A)	Q	Div I (Iso Mux XIT-15701A)	Q	
EM1I5705C	J-457	003	Div I (PT-15710A)	Q	Div I (PY-15710A)	Q	
EM1I5705E	J-457	003	Div I (PT-15709A)	Q	Div I (PY-15709A)	Q	
EM1I5705H	J-457	003	Div I (PT-15729A)	Q	Div I (PY-15729A)	Q	
EM1I5707A	J-457	003	Div I (PT-15729A)	Q	Div I (PR-15710A)	Q	
EM1I5714G	J-457	007	Div I (TE-15790A)	Q	Divi I (TT-15790A)	Q	

R1

Q Loads in Contact with TDRS-G33-1N605 (DIV I)

CABLES	DWG	SH	FROM	SEPGR(FRM)	TO	SEPGR(TO)	ISOLATED
EM1I5714H	J-457	007	Div I (TE-15790A)	Q	NONE (SPARE)		
EM1I5714J	J-457	007	Div I (TE-15799A)	Q	Div I (TT-15799A)	Q	
EM1I5714K	J-457	007	Div I (TE-15799A)	Q	NONE (SPARE)		
EM1I9801C	J-498	002	Div I (FT-E51-1N003)	Q	Div I (FY-14903A)	Q	
EM1I9801D	J-498	002	Div I (RCIC EGM Control)	Q	Div I (SY-15001B))	Q	
EM1I9801E	J-498	002	Div I (LITS-1N026B)	Q	Div I (LI-14262)	Q	
EM1I9801F	J-498	002	Div I (PT-14262)	Q	Div I (PI-14262)	Q	
EM1J25301	J-457	002	Div I (LT-15775A)	Q	Div I (LR-15776A)	Q	
EM1J45101	J-457	002	Div I (LSL-15775A)	Q	Div I (LI-15775A)	Q	
EM1J45102	J-457	002	Div I (PMA1 Power Supply)	Q	Div I (LR-15775A)	Q	
EM1J45102	J-457	002	Div I (LT-15775A,6A)	Q	Div I (LR-15775A)	Q	
EM1J45102	J-457	003	Div I (PT-15709A,10A)	Q	Div I (PR-15710A)	Q	
EM1J45102	J-457	007	Div I (TT-15790A)	Q	Div I (TR-15790A1)	Q	
EM1PM1302	M1-E11-66	010	Div I (FY-E11-1K600A)	Q	Div I (FI-E11-1R603A)	Q	
EM1PM1302	M1-E11-66	010	Div I (PT-E11-1N026A)	Q	PI-E11-1R606A1	Non Class 1E	
EM1PQ1302	M1-E51-90	006	Div I (FY-14989 Isolation Device))	Q	Div I (FY-E51-1K601)	Q	
EM1PQ1302	M1-E51-90	006	Div I (PT-E51-1N004,5,7,8)	Q	PI-E51-1R601,2,3,4	Non Class 1E	
EM1Q0043B	J-457	012	Div I (RE-15720A)	Q	Div I (RITS-15720A)	Q	
EM1Q0043C	J-457	012	Div I (RE-15720A)	Q	Div I (RITS-5720A)	Q	

R)

Q Loads in Contact with TDRS-G33-1N605 (DIV I)

CABLES	DWG	SH	FROM	SEPGR(FRM)	TO	SEPGR(TO)	ISOLATED
EM1Q0045G	J-457	015	Div I (NT-15725A)	Q	Div I (NIT-15725A)	Q	
EM1Q0823C	E-155	008	Div I (ES-E21-1K600A)	Q	Div I (FT-E21-1N003A)	Q	
EM1Q0823D	E-155	008	Div I (ES-E21-1K600A)	Q	Div I (PT-E21-1N001A)	Q	
EM1Q0836F	E-304	019	LITS-B21-1N026B (Mech Sw See App C f	Q	Div I (Iso Mux XIT-15701A)	Q	
EM1Q1319C	J-449	002	Div I (FT-E51-1N003)	Q	Div I (FY-E51-1K601)	Q	
EM1Q1319D	J-449	002	Div I (FC-E51-1R600)	Q	Div I (Ramp/Signal Converter)	Q	
EM1Q1319E	J-449	002	Div I (EGM CTL E51-C002)	Q	SI-15001A	Non Class 1E	
EM1Q1319F	J-449	002	Div I (FC-E51-1R600)	Q	Div I (Ramp/Signal Converter)	Q	
EM1Q1320C	E-154	018	Div I (ES-E51-1K600)	Q	Div I (RCIC Transmitters)	Q	
EM1Q3066C	E-153	035	Div I (ES-E11-1K603A)	Q	Div I (PT-E11-1N026A)	Q	R1
EM1Q3066E	E-153	035	Div I (ES-E11-1K603A)	Q	Div I (PT-E11-1N015A)	Q	
EM1Q3066F	E-153	035	Div I (ES-E11-1K603A)	Q	Div I (PT-E11-1N007A)	Q	
EM1Q4191C	E-187	001	Div I (1B216)	Q	Divi I (1E440A)	Q	
EM1Q4191D	E-187	001	Div I (1B216)	Q	Divi I (1E440A)	Q	
EM1Q4193C	E-187	001	Div I (1B236)	Q	Divi I (1E440C)	Q	
EM1Q4193D	E-187	001	Div I (1B236)	Q	Divi I (1E440C)	Q	
EM1Q4235E	E-304	016	Div I (AR-15746A)	Q	Div I (Iso Mux XIT-15701A)	Q	
EM1Q4235E	E-304	016	Div I (AR-15745A)	Q	Div I (Iso Mux XIT-15701A)	Q	
EM1Q4235F	E-304	016	Div I (TX-15751)	Q	Div I (Iso Mux XIT-15701A)	Q	

Q Loads in Contact with TDRS-G33-1N605 (DIV I)

CABLES	DWG	SH	FROM	SEPGR(FRM)	TO	SEPGR(TO)	ISOLATED
EM1Q4237D	E-304	019	Div I (RY-15721A)	Q	Div I (Iso Mux XIT-15701A)	Q	
EM1Q6525C	E-189	005	Div I (1C645)	Q	Divi I (PT-E32-1N055,6,9)	Q	
EM1Q6525D	E-189	005	Div I (1C645)	Q	Divi I (PT-E32-1N058)	Q	
EM1S1600F	E-267	001	Div I (1C693)	Q	Divi I (1C292A)	Q	
EM1S1600J	E-267	001	Div I (1C693)	Q	Divi I (1C292A)	Q	
EM1S1602C	E-267	002	Div I (1C693)	Q	Div I (1C226A)	Q	
EM1S1729C	E-267	002	Div I (1C201A)	Q	Div I (1C690A)	Q	
JM1Q0707C	J-444	004	Ch A Aff (Thermocouple)	Q	TRS-G33-1N604	Non Class 1E	
JM1Q0707D	J-444	004	Ch A Aff (Thermocouple)	Q	TRS-G33-1N604	Non Class 1E	
JM1Q0707E	J-444	004	Ch A Aff (Thermocouple)	Q	TRS-G33-1N604	Non Class 1E	
JM1Q0707F	J-444	004	Ch A Aff (Thermocouple)	Q	TRS-G33-1N604	Non Class 1E	R)
JM1Q0707G	J-444	004	Ch A Aff (Thermocouple)	Q	TRS-G33-1N604	Non Class 1E	
JM1Q0707H	J-444	004	Ch A Aff (Thermocouple)	Q	TRS-G33-1N604	Non Class 1E	
JM1Q0707M	J-444	004	Ch A Aff (Thermocouple)	Q	TRS-G33-1N604	Non Class 1E	
JM1Q0707N	J-444	004	Ch A Aff (Thermocouple)	Q	TRS-G33-1N604	Non Class 1E	
JM1Q0707P	J-444	004	Ch A Aff (Thermocouple)	Q	TRS-G33-1N604	Non Class 1E	
JM1Q0707S	J-444	004	Ch A Aff (Thermocouple)	Q	TRS-G33-1N604	Non Class 1E	
JM1Q0707T	J-444	004	Ch A Aff (Thermocouple)	Q	TRS-G33-1N604	Non Class 1E	
JM1Q0707V	J-444	004	Ch A Aff (Thermocouple)	Q	TRS-G33-1N604	Non Class 1E	

Q Loads in Contact with TDRS-G33-1N605 (DIV I)

CABLES	DWG	SH	FROM	SEPGR(FRM)	TO	SEPGR(TO)	ISOLATED
JM1Q0708C	J-444	005	Ch A Aff (Thermocouple)	Q	TDRS-G33-1N605	Non Class 1E	
JM1Q0708D	J-444	005	Ch A Aff (Thermocouple)	Q	TDRS-G33-1N605	Non Class 1E	
JM1Q0708E	J-444	005	Ch A Aff (Thermocouple)	Q	TDRS-G33-1N605	Non Class 1E	
JM1Q0708F	J-444	005	Ch A Aff (Thermocouple)	Q	TDRS-G33-1N605	Non Class 1E	
JM1Q0708G	J-444	005	Ch A Aff (Thermocouple)	Q	TDRS-G33-1N605	Non Class 1E	
JM1Q0708H	J-444	005	Ch A Aff (Thermocouple)	Q	TDRS-G33-1N605	Non Class 1E	
JM1Q0708J	J-444	005	Ch A Aff (Thermocouple)	Q	TDRS-G33-1N605	Non Class 1E	
JM1Q0708K	J-444	005	Ch A Aff (Thermocouple)	Q	TDRS-G33-1N605	Non Class 1E	
JM1Q0708L	J-444	005	Ch A Aff (Thermocouple)	Q	TDRS-G33-1N605	Non Class 1E	
JM1Q0708M	J-444	005	Ch A Aff (Thermocouple)	Q	TDRS-G33-1N605	Non Class 1E	
JM1Q0708P	J-444	005	Ch A Aff (Thermocouple)	Q	TDRS-G33-1N605	Non Class 1E	
JM1Q0708Q	J-444	005	Ch A Aff (Thermocouple)	Q	TDRS-G33-1N605	Non Class 1E	
JM1Q0708T	J-444	005	Ch A Aff (Thermocouple)	Q	TDRS-G33-1N605	Non Class 1E	
JM1Q0708U	J-444	005	Ch A Aff (Thermocouple)	Q	TDRS-G33-1N605	Non Class 1E	
JM1Q0708V	J-444	005	Ch A Aff (Thermocouple)	Q	TDRS-G33-1N605	Non Class 1E	
JM1Q0708W	J-444	005	Ch A Aff (Thermocouple)	Q	TDRS-G33-1N605	Non Class 1E	
JM1Q0708X	J-444	005	Ch A Aff (Thermocouple)	Q	TDRS-G33-1N605	Non Class 1E	
JM1Q0708Y	J-444	005	Ch A Aff (Thermocouple)	Q	TDRS-G33-1N605	Non Class 1E	
PM1Q0051C	E-176	001	Div I Aff (1D672)	Q	Process Rad Mom	Non Class 1E	YES

RJ

Q Loads in Contact with TDRS-G33-1N605 (DIV I)

CABLES	DWG	SH	FROM	SEPGR(FRM)	TO	SEPGR(TO)	ISOLATED
PM1Q0051D	E-176	001	Div I Aff (1D672)	Q	Process Rad Mom	Non Class 1E	YES
PM1Q0051E	E-176	001	Div I Aff (1D672)	Q	Process Rad Mom	Non Class 1E	YES

RI

Q Loads in Contact with TDRS-G33-1N605 (CH C)

CABLES	DWG	SH	FROM	SEPGR(FRM)	TO	SEPGR(TO)	ISOLATED
CM0G2403C	E-023	006E	Ch C (0C512C)	Q	Ch C (XI-00034C)	Q	
CM1Q0705C	E-168	002	Ch C (Thermocouple)	Q	Ch C (Temp Sw to Iso Logic)	Q	
CM1Q0705D	E-168	002	Ch C (Thermocouple)	Q	ChlC (Temp Sw to Iso Logic)	Q	
CM1Q0705E	E-168	002	Ch C (Thermocouple)	Q	Ch C (Temp Sw to Iso Logic)	Q	
CM1Q0705F	E-168	002	Ch C (Thermocouple)	Q	Ch C (Temp Sw to Iso Logic)	Q	
CM1Q0705G	E-168	002	Ch C (Thermocouple)	Q	Ch C (Temp Sw to Iso Logic)	Q	
CM1Q0705H	E-168	002	Ch C (Thermocouple)	Q	Ch C (Temp Sw to Iso Logic)	Q	
CM1Q0705J	E-168	002	Ch C (Thermocouple)	Q	Ch C (Temp Sw to Iso Logic)	Q	R)
LM1Q0711C	J-444	005	Ch C Aff (Thermocouple)	Q	TDRS-G33-1N605	Non Class 1E	
LM1Q0711D	J-444	005	Ch C Aff (Thermocouple)	Q	TDRS-G33-1N605	Non Class 1E	
LM1Q0711E	J-444	005	Ch C Aff (Thermocouple)	Q	TDRS-G33-1N605	Non Class 1E	
LM1Q0711F	J-444	005	Ch C Aff (Thermocouple)	Q	TDRS-G33-1N605	Non Class 1E	
LM1Q0711G	J-444	004	Ch A Aff (Thermocouple)	Q	TRS-G33-1N604	Non Class 1E	
LM1Q0711H	J-444	004	Ch A Aff (Thermocouple)	Q	TRS-G33-1N604	Non Class 1E	
LM1Q0711J	J-444	004	Ch A Aff (Thermocouple)	Q	TRS-G33-1N604	Non Class 1E	

Q Loads in Contact with TRS-E11-1R601

CABLES	DWG	SH	FROM	SEPGR(FRM)	TO	SEPGR(TO)	ISOLATED
NM0G2401C	E-023	006	Ch A (WT (Transducer))	Q	Computer Input EGJ01 (Unit 2)	Non Class 1E	
NM0G2401C	E-023	006	Ch A (WT (Transducer))	Q	XI-00032A	Non Class 1E	
NM0G2401C	E-023	006	Ch A (WT (Transducer))	Q	Computer Input EGJ01	Non Class 1E	
NM0G2401D	E-023	006	Ch A (VART (Transducer))	Q	Computer Input EQU05	Non Class 1E	
NM0G2401E	E-023	006	Ch A (VT (Transducer))	Q	Computer Input EGE01	Non Class 1E	
NM0G2401F	E-023	006	Ch A (WH (Transducer))	Q	Computer Input EGA01 (Unit 2)	Non Class 1E	
NM0G2401G	E-023	006	Ch A (WH (Transducer))	Q	Computer Input EGA01	Non Class 1E	
NM0G2402C	E-023	006	Ch B (WT (Transducer))	Q	XI-00032B	Non Class 1E	
NM0G2402C	E-023	006	Ch B (WT (Transducer))	Q	Computer Input EGJ02	Non Class 1E	
NM0G2402C	E-023	006	Ch B (WT (Transducer))	Q	Computer Input EGJ02 (Unit 2)	Non Class 1E	
NM0G2402D	E-023	006	Ch B (VART (Transducer))	Q	Computer Input EQU06	Non Class 1E	
NM0G2402E	E-023	006	Ch B (VT (Transducer))	Q	Computer Input EGE02	Non Class 1E	
NM0G2402F	E-023	006	Ch B (WH (Transducer))	Q	Computer Input EGA02 (Unit 2)	Non Class 1E	
NM0G2402G	E-023	006	Ch B (WH (Transducer))	Q	Computer Input EGA02	Non Class 1E	
NM0G2403C	E-023	006	Ch C (WT (Transducer))	Q	Computer Input EGJ03	Non Class 1E	
NM0G2403C	E-023	006	Ch C (WT (Transducer))	Q	Computer Input EGJ03 (Unit 2)	Non Class 1E	
NM0G2403C	E-023	006	Ch C (WT (Transducer))	Q	XI-00032C	Non Class 1E	
NM0G2403D	E-023	006	Ch C (VART (Transducer))	Q	Computer Input EQU07	Non Class 1E	
NM0G2403E	E-023	006	Ch C (VT (Transducer))	Q	Computer Input EGE03	Non Class 1E	

R1

CABLES	DWG	SH	FROM	SEPGR(FRM)	TO	SEPGR(TO)	ISOLATED
NM0G2403F	E-023	006	Ch C (WH (Transducer))	Q	Computer Input EGA03 (Unit 2)	Non Class 1E	
NM0G2403G	E-023	006	Ch C (WH Transducer))	Q	Computer Input EGA03	Non Class 1E	
NM0G2404C	E-023	006	Ch D (WT (Transducer))	Q	Computer Input EGJ03	Non Class 1E	
NM0G2404C	E-023	006	Ch D (WT (Transducer))	Q	Computer Input EGJ04 (Unit 2)	Non Class 1E	
NM0G2404C	E-023	006	Ch D (WT (Transducer))	Q	XI-00032D	Non Class 1E	
NM0G2404D	E-023	006	Ch D (VART (Transducer))	Q	Computer Input EQU07	Non Class 1E	
NM0G2404E	E-023	006	Ch D (VT (Transducer))	Q	Computer Input EGE04	Non Class 1E	
NM0G2404F	E-023	006	Ch D (WH (Transducer))	Q	Computer Input EGA04 (Unit 2)	Non Class 1E	
NM0G2404G	E-023	006	Ch D (WH (Transducer))	Q	Computer Input EGA04	Non Class 1E	
NM0S0400C	E-146	001	Ch A (AT-20108 (Transducer))	Q	Computer Input AEI01	Non Class 1E	
NM0S0401C	E-146	003	Ch B (AT-20208 (Transducer))	Q	Computer Input AEI02	Non Class 1E	
NM0S0402C	E-146	005	Ch C (AT-20303 (Transducer))	Q	Computer Input AEI03	Non Class 1E	
NM0S0403C	E-146	007	Ch C (AT-20403 (Transducer))	Q	Computer Input AEI04	Non Class 1E	
NM0V1200C	E-214	001	Ch C (AT-20310 (Transducer))	Q	Computer Input MVI05	Non Class 1E	
NM0V1201C	E-214	002	Ch D (AT-20410 (Transducer))	Q	Computer Input MVI06	Non Class 1E	
NM10ZZ011	M-147	001	LSH-C12-1N013E (Press Boundary)	Q	Computer Digital Input	Non Class 1E	
NM1A0401C	E-023	001	Ch A (AT-20101 (Transducer))	Q	XI-00022A	Non Class 1E	
NM1A0401C	E-023	001	Ch A (AT-20101 (Transducer))	Q	Computer Input ETI41 (Unit 2)	Non Class 1E	
NM1A0401C	E-023	001	Ch A (AT-20101 (Transducer))	Q	Computer Input ETI41	Non Class 1E	

R1

Q Loads in Contact with TRS-E11-1R601

CABLES	DWG	SH	FROM	SEPGR(FRM)	TO	SEPGR(TO)	ISOLATED
NM1A0401D	E-023	001	Ch A (VT-20101 (Transducer))	Q	Computer Input ETE41	Non Class 1E	
NM1A0401D	E-023	001	Ch A (VT-20101 (Transducer))	Q	Computer Input ETE41 (Unit 2)	Non Class 1E	
NM1A0401D	E-023	001	Ch A (AT-20104 (Transducer))	Q	XI-00018A	Non Class 1E	
NM1A0401E	E-023	001	Ch A (AT-20104 (Transducer))	Q	Computer Input EGI01	Non Class 1E	
NM1A0401E	E-023	001	Ch A (AT-20104 (Transducer))	Q	Computer Input EGI01 (Unit 2)	Non Class 1E	
NM1A0401F	E-023	001	Ch A (VT-20104 (Transducer))	Q	Computer Input EBE41	Non Class 1E	
NM1A0401F	E-023	001	Ch A (VT-20104 (Transducer))	Q	Computer Input EBE41 (Unit 2)	Non Class 1E	
NM1A0402C	E-023	002	Ch B (AT-20201 (Transducer))	Q	Computer Input ETI42 (Unit 2)	Non Class 1E	
NM1A0402C	E-023	002	Ch B (AT-20201 (Transducer))	Q	XI-00024A	Non Class 1E	
NM1A0402C	E-023	002	Ch B (AT-20201 (Transducer))	Q	Computer Input ETI42	Non Class 1E	R)
NM1A0402D	E-023	002	Ch B (AT-20204 (Transducer))	Q	Computer Input EGI02 (Unit 2)	Non Class 1E	
NM1A0402D	E-023	002	Ch B (AT-20204 (Transducer))	Q	XI-00019A	Non Class 1E	
NM1A0402D	E-023	002	Ch B (AT-20204 (Transducer))	Q	Computer Input EGI02	Non Class 1E	
NM1A0402E	E-023	002	Ch B (VT-20204 (Transducer))	Q	Computer Input EBE42	Non Class 1E	
NM1A0402E	E-023	002	Ch B (VT-20204 (Transducer))	Q	Computer Input EBE42 (Unit 2)	Non Class 1E	
NM1A0402F	E-023	002	Ch B (AT-20209 (Transducer))	Q	Computer Input ETI92 (Unit 2)	Non Class 1E	
NM1A0402F	E-023	002	Ch B (AT-20209 (Transducer))	Q	XI-00028A	Non Class 1E	
NM1A0402F	E-023	002	Ch B (AT-20209 (Transducer))	Q	Computer Input ETI92	Non Class 1E	
NM1A0403C	E-023	001	Ch C (AT-20301 (Transducer))	Q	Computer Input ETI43 (Unit 2)	Non Class 1E	

Q Loads in Contact with TRS-E11-1R601

CABLES	DWG	SH	FROM	SEPGR(FRM)	TO	SEPGR(TO)	ISOLATED
NM1A0403C	E-023	001	Ch C (AT-20301 (Transducer))	Q	XI-00023A	Non Class 1E	
NM1A0403C	E-023	001	Ch C (AT-20301 (Transducer))	Q	Computer Input ETI43	Non Class 1E	
NM1A0403D	E-023	001	Ch C (AT-20304 (Transducer))	Q	Computer Input EGI03	Non Class 1E	
NM1A0403D	E-023	001	Ch C (AT-20304 (Transducer))	Q	Computer Input EGI03 (Unit 2)	Non Class 1E	
NM1A0403D	E-023	001	Ch C (AT-20304 (Transducer))	Q	XI-00020A	Non Class 1E	
NM1A0403E	E-023	001	Ch C (VT-20304 (Transducer))	Q	Computer Input EBE43 (Unit 2)	Non Class 1E	
NM1A0403E	E-023	001	Ch C (VT-20304 (Transducer))	Q	Computer Input EBE43	Non Class 1E	
NM1A0403F	E-023	001	Ch C (VT-20309 (Transducer))	Q	Computer Input ETI93	Non Class 1E	
NM1A0403F	E-023	001	Ch C (AT-20309 (Transducer))	Q	Computer Input ETI93 (Unit 2)	Non Class 1E	R1
NM1A0403F	E-023	001	Ch C (AT-20309 (Transducer))	Q	XI-00027A	Non Class 1E	
NM1A0404C	E-023	002	Ch D (AT-20401 (Transducer))	Q	Computer Input ETI44	Non Class 1E	
NM1A0404C	E-023	002	Ch D (AT-20401 (Transducer))	Q	Computer Input ETI44 (Unit 2)	Non Class 1E	
NM1A0404C	E-023	002	Ch D (AT-20401 (Transducer))	Q	XI-00025A	Non Class 1E	
NM1A0404D	E-023	002	Ch D (AT-20404 (Transducer))	Q	XI-00021A	Non Class 1E	
NM1A0404D	E-023	002	Ch D (AT-20404 (Transducer))	Q	Computer Input EGI04 (Unit 2)	Non Class 1E	
NM1A0404D	E-023	002	Ch D (AT-20404 (Transducer))	Q	Computer Input EGI04	Non Class 1E	
NM1A0404E	E-023	002	Ch D (VT-20404 (Transducer))	Q	Computer Input EBE44	Non Class 1E	
NM1A0404F	E-023	002	Ch D (AT-20409 (Transducer))	Q	Computer Input ETI94	Non Class 1E	
NM1A0404F	E-023	002	Ch D (AT-20409 (Transducer))	Q	Computer Input ETI94 (Unit 2)	Non Class 1E	

Q Loads in Contact with TRS-E11-1R601

CABLES	DWG	SH	FROM	SEPGR(FRM)	TO	SEPGR(TO)	ISOLATED
NM1A0404F	E-023	002	Ch D (AT-20409 (Transducer))	Q	XI-00029A	Non Class 1E	
NM1C0328D	E-135	015	Ch B (AT-20210 (Transducer))	Q	Computer Input TNI01	Non Class 1E	
NM1F0200F	E-179	001	PDT-C32-1N004B (Press Boundary)	Q	Computer Input NFL02	Non Class 1E	
NM1F0200F	E-179	001	PDT-C32-1N017 (Press Boundary)	Q	LR-C32-1R608	Non Class 1E	
NM1F0200H	E-179	001	PT-C32-1N008 (Press Boundary)	Q	PR-C32-1R609	Non Class 1E	
NM1F0200J	E-179	001	FT-C32-1N003A (Press Boundary)	Q	FY-C32-1K605A	Non Class 1E	
NM1F0200K	E-179	001	FT-C32-1N003B (Press Boundary)	Q	FY-C32-1K605B	Non Class 1E	
NM1F0200L	E-179	001	FT-C32-1N003C (Press Boundary)	Q	FY-C32-1K605C	Non Class 1E	
NM1F0200M	E-179	001	FT-C32-1N003D (Press Boundary)	Q	FY-C32-1K605D	Non Class 1E	R1
NM1F0200N	E-179	001	PDT-C32-1N004C (Press Boundary)	Q	LSH-C32-1K624C	Non Class 1E	
NM1I5707D	J-457	003B	PT-15702 (Press Boundary)	Q	PSHL-15702	Non Class 1E	
NM1M0104A	E-302	003	TE-E11-1N004A (Press Boundary)	Q	Computer Input NHT01	Non Class 1E	
NM1M0104B	E-302	003	TE-E11-1N004B (Press Boundary)	Q	Computer Input NHT02	Non Class 1E	
NM1PE4279	M1-C51-19	040	Flow Unit C	Q	Indicating Light	Non Class 1E	Contact to Coil
NM1PM1307	J-451	009	FT-E11-1N013 (Press Boundary)	Q	FI-E11-1R607	Non Class 1E	
NM1PPF101	J-444	009	FY-G33-1K602 (See App F for eval.)	Q	FI-G33-1R609	Non Class 1E	
NM1PPF101	J-444	009	FY-G33-1K605 (See App F for eval.)	Q	FI-G33-1R602	Non Class 1E	
NM1PPF101	J-444	009	FY-G33-1K605 (See App F for eval.)	Q	FI-G33-1R602	Non Class 1E	
NM1Q0045L	J-457	015	NIT-15725A (Isolation Device)	Q	Computer Input NM118	Non Class 1E	YES

Q Loads in Contact with TRS-E11-1R601

CABLES	DWG	SH	FROM	SEPGR(FRM)	TO	SEPGR(TO)	ISOLATED
NM1Q0045L	J-457	015	NIT-15725A (Isolation Device)	Q	Computer Input NM602	Non Class 1E	YES
NM1Q0045M	J-457	015	NIT-15725A (Isolation Device)	Q	SPDS Input NM6002Z	Non Class 1E	YES
NM1Q0048L	J-457	016	NIT-15725B (Isolation Device)	Q	Computer Input	Non Class 1E	YES
NM1Q0048L	J-457	016	NIT-15725B (Isolation Device)	Q	Computer Input NM117	Non Class 1E	YES
NM1Q0048L	J-457	016	NIT-15725B (Isolation Device)	Q	Computer Input NM601	Non Class 1E	YES
NM1Q0048M	J-457	016	NIT-15725B (Isolation Device)	Q	SPDS Input NM6001Z	Non Class 1E	YES
NM1Q0048M	J-457	016	NIT-15725B (Isolation Device)	Q	Computer Input	Non Class 1E	YES
NM1Q0300C	E-169	001	Ch A (AT-20107 (Transducer))	Q	Computer Input NDI01	Non Class 1E	
NM1Q0301C	E-169	002	Ch D (AT-20407 (Transducer))	Q	Computer Input NDI02	Non Class 1E	
NM1Q0801C	E-156	001	Ch A (AT-20105 (Transducer))	Q	Computer Input NSI01	Non Class 1E	
NM1Q0802C	E-156	002	Ch A (AT-20205 (Transducer))	Q	Computer Input NSI02	Non Class 1E	
NM1Q0803C	E-156	003	Ch B (AT-20305 (Transducer))	Q	Computer Input NSI03	Non Class 1E	
NM1Q0804C	E-156	004	Ch D (AT-20405 (Transducer))	Q	Computer Input NSI04	Non Class 1E	
NM1Q1604E	E-181	007	PDT-B31-1N015A (Press Boundary)	Q	TMS		
NM1Q1604E	E-181	007	PDT-B31-1N015A (Press Boundary)	Q	PDI-B31-1R612A	Non Class 1E	
NM1Q2000H	E-158	001	LSH-C12-1N013E (Press Boundary)	Q	Relay K3	Non Class 1E	Contact to Coil
NM1Q3000C	E-153	001	Ch A (AT-20102 (Transducer))	Q	Computer Input NHI01	Non Class 1E	
NM1Q3001C	E-153	003	Ch B (AT-20202 (Transducer))	Q	Computer Input NHI02	Non Class 1E	
NM1Q3002C	E-153	005	Ch C (AT-20302 (Transducer))	Q	Computer Input NHI03	Non Class 1E	

R1

Q Loads in Contact with TRS-E11-1R601

CABLES	DWG	SH	FROM	SEPGR(FRM)	TO	SEPGR(TO)	ISOLATED
NM1Q3003C	E-153	007	Ch D (AT-20402 (Transducer))	Q	Computer Input NHI04	Non Class 1E	
NM1Q3066J	E-153	035	FT-E11-1N013 (Press Boundary)	Q	Computer Input NHF03	Non Class 1E	
NM1Q3066J	E-153	035	FT-E11-1N013 (Press Boundary)	Q	FI-E11-1R607	Non Class 1E	
NM1Q3070C	J-451	18	CE-E11-1N001A (Seismic Only)	Q	CISH-E11-1R001A	Non Class 1E	
NM1Q3070D	J-451	18	CE-E11-1N001B (Seismic Only)	Q	CISH-E11-1R001B	Non Class 1E	
NM1Q3071C	J-451	017	TE-E11-1N004A (Seismic Only)	Q	TRS-E11-1R601	Non Class 1E	
NM1Q3071E	J-451	017	TE-E11-1N017A (Seismic Only)	Q	TRS-E11-1R601	Non Class 1E	
NM1Q3071F	J-451	017	TE-E11-1N017C (Seismic Only)	Q	TRS-E11-1R601	Non Class 1E	
NM1Q3071G	J-451	017	TE-E11-1N027A (Seismic Only)	Q	TRS-E11-1R601	Non Class 1E	
NM1Q3071H	J-451	017	TE-E11-1N032A (Seismic Only)	Q	TRS-E11-1R601	Non Class 1E	R1
NM1Q3071J	J-451	017	TE-E11-1N004B (Seismic Only)	Q	TRS-E11-1R601	Non Class 1E	
NM1Q3071K	J-451	017	TE-E11-1N005B (Seismic Only)	Q	Computer Input AET06	Non Class 1E	
NM1Q3071L	J-451	017	TE-E11-1N017B (Seismic Only)	Q	TRS-E11-1R601	Non Class 1E	
NM1Q3071M	J-451	017	TE-E11-1N017D (Seismic Only)	Q	TRS-E11-1R601	Non Class 1E	
NM1Q3071N	J-451	017	TE-E11-1N027B (Seismic Only)	Q	TRS-E11-1R601	Non Class 1E	
NM1Q3071P	J-451	017	TE-E11-1N032B (Seismic Only)	Q	TRS-E11-1R601	Non Class 1E	
NM1Q4191N	E-187	001	Div I (TE-15796A1 (T/C))	Q	Div I (TSS-15796A)	Q	
NM1Q4191P	E-187	001	Div I (TE-15796A2 (T/C))	Q	Div I (TSS-15796A)	Q	
NM1Q4191Q	E-187	001	Div I (TE-15796A3 (T/C))	Q	Div I (TSS-15796A)	Q	

CABLES	DWG	SH	FROM	SEPGR(FRM)	TO	SEPGR(TO)	ISOLATED
NM1Q4193E	E-187	001	Div I (TE-15796C1 (T/C))	Q	Div I (TSS-15796C)	Q	
NM1Q4193F	E-187	001	Div I (TE-15796C2 (T/C))	Q	Div I (TSS-15796C)	Q	
NM1Q4193G	E-187	001	Div I (TE-15796C3 (T/C))	Q	Div I (TSS-15796C)	Q	
NM1Q4194E	E-187	001	Div II (TE-15796D1(T/C))	Q	Div II (TSS-15796D)	Q	
NM1Q4194F	E-187	001	Div II (TE-15796D2 (T/C))	Q	Div II (TSS-15796D)	Q	
NM1Q4194G	E-187	001	Div II (TE-15796D3 (T/C))	Q	Div II (TSS-15796D)	Q	
NM1S0600C	E-150	003	Ch C (AT-20308 (Transducer))	Q	Computer Input AEI05	Non Class 1E	
NM1S0601C	E-150	001	Ch D (AT-20408 (Transducer))	Q	Computer Input AEI06	Non Class 1E	
NM1V1600C	E-213	001	Ch A (AT-20110 (Transducer))	Q	Computer Input MVI03	Non Class 1E	
NM1V1601C	E-213	002	Ch A (AT-20211 (Transducer))	Q	Computer Input MVI04	Non Class 1E	
NM1V2600C	E-216	001	Ch A (AT-20103 (Transducer))	Q	Computer Input MVI01	Non Class 1E	
NM1V2601C	E-216	002	Ch B (AT-20203 (Transducer))	Q	Computer Input MVI02	Non Class 1E	
NM2C0328C	E-135	039	Ch C (AT-20309 (Transducer))	Q	Computer Input TNI51	Non Class 1E	

R1

Q Loads in Contact with TRS-G33-1N604 (DIV I)

CABLES	DWG	SH	FROM	SEPGR(FRM)	TO	SEPGR(TO)	ISOLATED
AM0G2401C	E-023	006	Ch A (Frequency Tranducer)	Q	Ch A (XI-00034A)	Q	
AM1Q0701C	E-168	002	Ch A (Thermocouple)	Q	Ch A (Temp Sw to Iso Logic)	Q	
AM1Q0701D	E-168	002	Ch A (Thermocouple)	Q	Ch A (Temp Sw to Iso Logic)	Q	
AM1Q0701E	E-168	002	Ch A (Thermocouple)	Q	Ch A (Temp Sw to Iso Logic)	Q	
AM1Q0701F	E-168	002	Ch A (Thermocouple)	Q	Ch A (Temp Sw to Iso Logic)	Q	
AM1Q0701G	E-168	002	Ch A (Thermocouple)	Q	Ch A (Temp Sw to Iso Logic)	Q	
AM1Q0701H	E-168	002	Ch A (Thermocouple)	Q	Ch A (Temp Sw to Iso Logic)	Q	
AM1Q0701J	E-168	002	Ch A (Thermocouple)	Q	Ch A (Temp Sw to Iso Logic)	Q	
AM1Q0701K	E-168	002	Ch A (Thermocouple)	Q	Ch A (Temp Sw to Iso Logic)	Q	
AM1Q0701L	E-168	002	Ch A (Thermocouple)	Q	Ch A (Temp Sw to Iso Logic)	Q	R1
AM1Q0701M	E-168	002	Ch A (Thermocouple)	Q	Ch A (Temp Sw to Iso Logic)	Q	
AM1Q0701N	E-168	002	Ch A (Thermocouple)	Q	Ch A (Temp Sw to Iso Logic)	Q	
AM1Q0701P	E-168	002	Ch A (Thermocouple)	Q	Ch A (Temp Sw to Iso Logic)	Q	
AM1Q0701R	E-168	002	Ch A (Thermocouple)	Q	Ch A (Temp Sw to Iso Logic)	Q	
AM1Q0701S	E-168	002	Ch A (Thermocouple)	Q	Ch A (Temp Sw to Iso Logic)	Q	
AM1Q0702C	E-168	001	Ch A (Thermocouple)	Q	Ch A (Temp Switch to Iso Logic)	Q	
AM1Q0702D	E-168	001	Ch A (Thermocouple)	Q	Ch A (Temp Switch to Iso Logic)	Q	
AM1Q0702E	E-168	001	Ch A (Thermocouple)	Q	Ch A (Temp Switch to Iso Logic)	Q	
AM1Q0702F	E-168	001	Ch A (Thermocouple)	Q	Ch A (Temp Switch to Iso Logic)	Q	

Q Loads in Contact with TRS-G33-1N604 (DIV I)

CABLES	DWG	SH	FROM	SEPGR(FRM)	TO	SEPGR(TO)	ISOLATED
AM1Q0702G	E-168	001	Ch A (Thermocouple)	Q	Ch A (Temp Switch to Iso Logic)	Q	
AM1Q0702H	E-168	001	Ch A (Thermocouple)	Q	Ch A (Temp Switch to Iso Logic)	Q	
AM1Q0702J	E-168	001	Ch A (Thermocouple)	Q	Ch A (Temp Switch to Iso Logic)	Q	
AM1Q0702K	E-168	001	Ch A (Thermocouple)	Q	Ch A (Temp Switch to Iso Logic)	Q	
AM1Q0702L	E-168	001	Ch A (Thermocouple)	Q	Ch A (Temp Switch to Iso Logic)	Q	
AM1Q0702M	E-168	001	Ch A (Thermocouple)	Q	Ch A (Temp Switch to Iso Logic)	Q	
AM1Q0702N	E-168	001	Ch A (Thermocouple)	Q	Ch A (Temp Switch to Iso Logic)	Q	
AM1Q0702P	E-168	001	Ch A (Thermocouple)	Q	Ch A (Temp Switch to Iso Logic)	Q	
AM1Q0702R	E-168	001	Ch A (Thermocouple)	Q	Ch A (Temp Switch to Iso Logic)	Q	
AM1Q0702S	E-168	001	Ch A (Thermocouple)	Q	Ch A (Temp Switch to Iso Logic)	Q	
AM1Q0702T	J-401	012	Ch A (TE-10100A)	Q	Ch A (TSH-10100A)	Q	
AM1Q0702U	J-401	012	Ch A (TE-10100B)	Q	Ch A (TSH-10100B)	Q	
EM0I1101D	J-411	002	Div I (PT-01107A)	Q	Div I (PI-01107A)	Q	
EM0I1101E	J-411	002	Div I (FT-01109A)	Q	Div I (FY-01109A1)	Q	
EM0I1104F	J-411	005	Div I (TE-01106A)	Q	Div I (TT-01106A)	Q	
EM1I1211C	J-451	015	Div I (TE-E11-1N027A (RTD))	Q	Div I (TT-15127A)	Q	
EM1I1211D	J-451	015	Div I (TT-15127A)	Q	Div I (TI-15127A)	Q	
EM1I2603C	J-426	003	Div I (PY-12644A)	Q	Div I (PT-12644)	Q	
EM1I2603D	J-426	003	Div I (PY-12644)	Q	Div I (PT-12644)	Q	

R1

Q Loads in Contact with TRS-G33-1N604 (DIV I)

CABLES	DWG	SH	FROM	SEPGR(FRM)	TO	SEPGR(TO)	ISOLATED
EM1I4202D	J-442	001	Div I (LT-14201A)	Q	Div I (LY-14201A)	Q	
EM1I4202E	J-442	001	Div I (LT-14203A)	Q	Div I (LY-14203A)	Q	
EM1I4202H	J-442	001	Div I (LT-14203A)	Q	Div I (LI-14203A)	Q	
EM1I4202J	J-442	001	Div I (LT-14202A)	Q	Div I (LR-14202)	Q	
EM1I4202L	J-442	001	Div I (LT-14202A)	Q	Div I (LY-14202A)	Q	
EM1I4202M	J-442	001	Div I (PT-14201A)	Q	Divi I (1C651)	Q	
EM1I4202N	J-442	001	Div I (LT-14203A)	Q	Div I (LI-14201A1)	Q	
EM1I5101D	J-470	002	Div I (FT-15120A)	Q	Div I (FY-15120A)	Q	
EM1I5101E	J-470	002	Div I (FT-15121A)	Q	Div I (FY-15121A)	Q	
EM1I5101F	J-470	002	Div I (FY-15120A)	Q	Div I (FI-15120A)	Q	R1
EM1I5701C	J-457	002	Div I (LT-15776A)	Q	Div I (Iso Mux XIT-15701A)	Q	
EM1I5705C	J-457	003	Div I (PT-15710A)	Q	Div I (PY-15710A)	Q	
EM1I5705E	J-457	003	Div I (PT-15709A)	Q	Div I (PY-15709A)	Q	
EM1I5705H	J-457	003	Div I (PT-15729A)	Q	Div I (PY-15729A)	Q	
EM1I5707A	J-457	003	Div I (PT-15729A)	Q	Div I (PR-15710A)	Q	
EM1I5714G	J-457	007	Div I (TE-15790A)	Q	Divi I (TT-15790A)	Q	
EM1I5714H	J-457	007	Div I (TE-15790A)	Q	NONE (SPARE)		
EM1I5714J	J-457	007	Div I (TE-15799A)	Q	Div I (TT-15799A)	Q	
EM1I5714K	J-457	007	Div I (TE-15799A)	Q	NONE (SPARE)		

CABLES	DWG	SH	FROM	SEPGR(FRM)	TO	SEPGR(TO)	ISOLATED
EM1I9801C	J-498	002	Div I (FT-E51-1N003)	Q	Div I (FY-14903A)	Q	
EM1I9801D	J-498	002	Div I (RCIC EGM Control)	Q	Div I (SY-15001B))	Q	
EM1I9801E	J-498	002	Div I (LITS-1N026B)	Q	Div I (LI-14262)	Q	
EM1I9801F	J-498	002	Div I (PT-14262)	Q	Div I (PI-14262)	Q	
EM1J25301	J-457	002	Div I (LT-15775A)	Q	Div I (LR-15776A)	Q	
EM1J45101	J-457	002	Div I (LSL-15775A)	Q	Div I (LI-15775A)	Q	
EM1J45102	J-457	002	Div I (PMA1 Power Supply)	Q	Div I (LR-15775A)	Q	
EM1J45102	J-457	002	Div I (LT-15775A,6A)	Q	Div I (LR-15775A)	Q	
EM1J45102	J-457	003	Div I (PT-15709A,10A)	Q	Div I (PR-15710A)	Q	
EM1J45102	J-457	007	Div I (TT-15790A)	Q	Div I (TR-15790A1)	Q	R1
EM1PM1302	M1-E11-66	010	Div I (FY-E11-1K600A)	Q	Div I (FI-E11-1R603A)	Q	
EM1PM1302	M1-E11-66	010	Div I (PT-E11-1N026A)	Q	PI-E11-1R606A1	Non Class 1E	
EM1PQ1302	M1-E51-90	006	Div I (FY-14989 Isolation Device))	Q	Div I (FY-E51-1K601)	Q	
EM1PQ1302	M1-E51-90	006	Div I (PT-E51-1N004,5,7,8)	Q	PI-E51-1R601,2,3,4	Non Class 1E	
EM1Q0043B	J-457	012	Div I (RE-15720A)	Q	Div I (RITS-15720A)	Q	
EM1Q0043C	J-457	012	Div I (RE-15720A)	Q	Div I (RITS-5720A)	Q	
EM1Q0045G	J-457	015	Div I (NT-15725A)	Q	Div I (NIT-15725A)	Q	
EM1Q0823C	E-155	008	Div I (ES-E21-1K600A)	Q	Div I (FT-E21-1N003A)	Q	
EM1Q0823D	E-155	008	Div I (ES-E21-1K600A)	Q	Div I (PT-E21-1N001A)	Q	

Q Loads in Contact with TRS-G33-1N604 (DIV I)

CABLES	DWG	SH	FROM	SEPGR(FRM)	TO	SEPGR(TO)	ISOLATED
EM1Q0836F	E-304	019	LITS-B21-1N026B (Mech Sw See App C f	Q	Div I (Iso Mux XIT-15701A)	Q	
EM1Q1319C	J-449	002	Div I (FT-E51-1N003)	Q	Div I (FY-E51-1K601)	Q	
EM1Q1319D	J-449	002	Div I (FC-E51-1R600)	Q	Div I (Ramp/Signal Converter)	Q	
EM1Q1319E	J-449	002	Div I (EGM CTL E51-C002)	Q	SI-15001A	Non Class 1E	
EM1Q1319F	J-449	002	Div I (FC-E51-1R600)	Q	Div I (Ramp/Signal Converter)	Q	
EM1Q1320C	E-154	018	Div I (ES-E51-1K600)	Q	Div I (RCIC Transmitters)	Q	
EM1Q3066C	E-153	035	Div I (ES-E11-1K603A)	Q	Div I (PT-E11-1N026A)	Q	
EM1Q3066E	E-153	035	Div I (ES-E11-1K603A)	Q	Div I (PT-E11-1N015A)	Q	
EM1Q3066F	E-153	035	Div I (ES-E11-1K603A)	Q	Div I (PT-E11-1N007A)	Q	
EM1Q4191C	E-187	001	Div I (1B216)	Q	Divi I (1E440A)	Q	
EM1Q4191D	E-187	001	Div I (1B216)	Q	Divi I (1E440A)	Q	
EM1Q4193C	E-187	001	Div I (1B236)	Q	Divi I (1E440C)	Q	
EM1Q4193D	E-187	001	Div I (1B236)	Q	Divi I (1E440C)	Q	
EM1Q4235E	E-304	016	Div I (AR-15745A)	Q	Div I (Iso Mux XIT-15701A)	Q	
EM1Q4235E	E-304	016	Div I (AR-15746A)	Q	Div I (Iso Mux XIT-15701A)	Q	
EM1Q4235F	E-304	016	Div I (TX-15751)	Q	Div I (Iso Mux XIT-15701A)	Q	
EM1Q4237D	E-304	019	Div I (RY-15721A)	Q	Div I (Iso Mux XIT-15701A)	Q	
EM1Q6525C	E-189	005	Div I (1C645)	Q	Divi I (PT-E32-1N055,6,9)	Q	
EM1Q6525D	E-189	005	Div I (1C645)	Q	Divi I (PT-E32-1N058)	Q	

R1

Q Loads in Contact with TRS-G33-1N604 (DIV I)

CABLES	DWG	SH	FROM	SEPGR(FRM)	TO	SEPGR(T0)	ISOLATED
EM1S1600F	E-267	001	Div I (1C693)	Q	Divi I (1C292A)	Q	
EM1S1600J	E-267	001	Div I (1C693)	Q	Divi I (1C292A)	Q	
EM1S1602C	E-267	002	Div I (1C693)	Q	Div I (1C226A)	Q	
EM1S1729C	E-267	002	Div I (1C201A)	Q	Div I (1C690A)	Q	
JM1Q0707C	J-444	004	Ch A Aff (Thermocouple)	Q	TRS-G33-1N604	Non Class 1E	
JM1Q0707D	J-444	004	Ch A Aff (Thermocouple)	Q	TRS-G33-1N604	Non Class 1E	
JM1Q0707E	J-444	004	Ch A Aff (Thermocouple)	Q	TRS-G33-1N604	Non Class 1E	
JM1Q0707F	J-444	004	Ch A Aff (Thermocouple)	Q	TRS-G33-1N604	Non Class 1E	
JM1Q0707G	J-444	004	Ch A Aff (Thermocouple)	Q	TRS-G33-1N604	Non Class 1E	R1
JM1Q0707H	J-444	004	Ch A Aff (Thermocouple)	Q	TRS-G33-1N604	Non Class 1E	
JM1Q0707M	J-444	004	Ch A Aff (Thermocouple)	Q	TRS-G33-1N604	Non Class 1E	
JM1Q0707N	J-444	004	Ch A Aff (Thermocouple)	Q	TRS-G33-1N604	Non Class 1E	
JM1Q0707P	J-444	004	Ch A Aff (Thermocouple)	Q	TRS-G33-1N604	Non Class 1E	
JM1Q0707S	J-444	004	Ch A Aff (Thermocouple)	Q	TRS-G33-1N604	Non Class 1E	
JM1Q0707T	J-444	004	Ch A Aff (Thermocouple)	Q	TRS-G33-1N604	Non Class 1E	
JM1Q0708C	J-444	005	Ch A Aff (Thermocouple)	Q	TDRS-G33-1N605	Non Class 1E	
JM1Q0708D	J-444	005	Ch A Aff (Thermocouple)	Q	TDRS-G33-1N605	Non Class 1E	
JM1Q0708E	J-444	005	Ch A Aff (Thermocouple)	Q	TDRS-G33-1N605	Non Class 1E	
JM1Q0708F	J-444	005	Ch A Aff (Thermocouple)	Q	TDRS-G33-1N605	Non Class 1E	

Q Loads in Contact with TRS-G33-1N604 (DIV I)

CABLES	DWG	SH	FROM	SEPGR(FRM)	TO	SEPGR(TO)	ISOLATED
JM1Q0708G	J-444	005	Ch A Aff (Thermocouple)	Q	TDRS-G33-1N605	Non Class 1E	
JM1Q0708H	J-444	005	Ch A Aff (Thermocouple)	Q	TDRS-G33-1N605	Non Class 1E	
JM1Q0708J	J-444	005	Ch A Aff (Thermocouple)	Q	TDRS-G33-1N605	Non Class 1E	
JM1Q0708K	J-444	005	Ch A Aff (Thermocouple)	Q	TDRS-G33-1N605	Non Class 1E	
JM1Q0708L	J-444	005	Ch A Aff (Thermocouple)	Q	TDRS-G33-1N605	Non Class 1E	
JM1Q0708M	J-444	005	Ch A Aff (Thermocouple)	Q	TDRS-G33-1N605	Non Class 1E	
JM1Q0708T	J-444	005	Ch A Aff (Thermocouple)	Q	TDRS-G33-1N605	Non Class 1E	
JM1Q0708U	J-444	005	Ch A Aff (Thermocouple)	Q	TDRS-G33-1N605	Non Class 1E	R]
JM1Q0708V	J-444	005	Ch A Aff (Thermocouple)	Q	TDRS-G33-1N605	Non Class 1E	
JM1Q0708W	J-444	005	Ch A Aff (Thermocouple)	Q	TDRS-G33-1N605	Non Class 1E	
JM1Q0708X	J-444	005	Ch A Aff (Thermocouple)	Q	TDRS-G33-1N605	Non Class 1E	
JM1Q0708Y	J-444	005	Ch A Aff (Thermocouple)	Q	TDRS-G33-1N605	Non Class 1E	
PM1Q0051C	E-176	001	Div I Aff (1D672)	Q	Process Rad Mom	Non Class 1E	YES
PM1Q0051D	E-176	001	Div I Aff (1D672)	Q	Process Rad Mom	Non Class 1E	YES
PM1Q0051E	E-176	001	Div I Aff (1D672)	Q	Process Rad Mom	Non Class 1E	YES

Q Loads in Contact with TRS-G33-1N604 (CH C)

CABLES	DWG	SH	FROM	SEPGR(FRM)	TO	SEPGR(TO)	ISOLATED
CM0G2403C	E-023	006E	Ch C (0C512C)	Q	Ch C (XI-00034C)	Q	
CM1Q0705C	E-168	002	Ch C (Thermocouple)	Q	Ch C (Temp Sw to Iso Logic)	Q	
CM1Q0705D	E-168	002	Ch C (Thermocouple)	Q	ChlC (Temp Sw to Iso Logic)	Q	
CM1Q0705E	E-168	002	Ch C (Thermocouple)	Q	Ch C (Temp Sw to Iso Logic)	Q	
CM1Q0705F	E-168	002	Ch C (Thermocouple)	Q	Ch C (Temp Sw to Iso Logic)	Q	
CM1Q0705G	E-168	002	Ch C (Thermocouple)	Q	Ch C (Temp Sw to Iso Logic)	Q	
CM1Q0705H	E-168	002	Ch C (Thermocouple)	Q	Ch C (Temp Sw to Iso Logic)	Q	
CM1Q0705J	E-168	002	Ch C (Thermocouple)	Q	Ch C (Temp Sw to Iso Logic)	Q	
LM1Q0711C	J-444	005	Ch C Aff (Thermocouple)	Q	TDRS-G33-1N605	Non Class 1E	
LM1Q0711D	J-444	005	Ch C Aff (Thermocouple)	Q	TDRS-G33-1N605	Non Class 1E	
LM1Q0711E	J-444	005	Ch C Aff (Thermocouple)	Q	TDRS-G33-1N605	Non Class 1E	
LM1Q0711F	J-444	005	Ch C Aff (Thermocouple)	Q	TDRS-G33-1N605	Non Class 1E	
LM1Q0711G	J-444	004	Ch A Aff (Thermocouple)	Q	TRS-G33-1N604	Non Class 1E	
LM1Q0711H	J-444	004	Ch A Aff (Thermocouple)	Q	TRS-G33-1N604	Non Class 1E	
LM1Q0711J	J-444	004	Ch A Aff (Thermocouple)	Q	TRS-G33-1N604	Non Class 1E	

R1

Q Loads in Contact with PI-E11-1R606A1

CABLES	DWG	SH	FROM	SEPGR(FRM)	TO	SEPGR(TO)	ISOLATED
AK1E11017	M1-E11-66	017	Ch A (1B216)	Q	Ch A (HV-E11-1F015A)	Q	
AK1E11017	M1-E11-66	020	Ch A (1D614)	Q	Ch A (1P202A)	Q	
AK1PM1705	M1-E11-66	016	Ch A (1B237)	Q	Ch A (HV-E11-1F048A)	Q	
AK1PM1705	M1-E11-66	016	Ch A (1D614)	Q	Ch A (1P202A)	Q	
AK1PM1705	M1-E11-66	016	Ch A (1Y216)	Q	Ch A (SV-11274A)	Q	
AM0G2401C	E-023	006	Ch A (Frequency Tranducer)	Q	Ch A (XI-00034A)	Q	
AM1Q0702T	J-401	012	Ch A (TE-10100A)	Q	Ch A (TSH-10100A)	Q	
AM1Q0702U	J-401	012	Ch A (TE-10100B)	Q	Ch A (TSH-10100B)	Q	
EK0S0402P	E-146	005	Div I (1A20303)	Q	Div I (ESW RESET LOGIC)	Q	R1
EK1C41001	M1-C41-36	003	Div I (1Y216-07)	Q	Div I (C41-1F004B)	Q	
EK1C41002	M1-C41-36	003	Div I (1B217061)	Q	Div I (K2B-C41)	Q	
EK1C41003	M1-C41-36	003	Div I (1Y236-021)	Q	Div I (C41-F004A)	Q	
EK1E11001	M1-E11-66	004	Div I (1D614)	Q	Div I (K7A,8A-E21A)	Q	
EK1E11002	M1-E11-66	006	Div I (1D614)	Q	Div I (K19A-E21A)	Q	
EK1E11003	M1-E11-66	006	Div I (1D614)	Q	Div I (K9A-E21A)	Q	
EK1E11004	M1-E11-66	005	Div I (1D614)	Q	Div I (NO FOUND)	Q	
EK1E11006	M1-E11-66	017	Div I (1Y216)	Q	Div I (HV-E11-1F060A, 1F122A)	Q	
EK1E11007	M1-E11-66	004	Div I (1D614)	Q	Div I (K110A-U2, 52BX-20301)	Q	
EK1E11008	M1-E11-66	004	Div I (1D614)	Q	Div I (K110A-U2)	Q	

Q Loads in Contact with PI-E11-1R606A1

CABLES	DWG	SH	FROM	SEPGR(FRM)	TO	SEPGR(TO)	ISOLATED
EK1E11009	M1-E11-66	004	Div I (2D614)	Q	Div I (K110A-U1)	Q	
EK1E11010	M1-E11-66	004	Div I (2D614)	Q	Div I (K110A-U1)	Q	
EK1E11011	M1-E11-66	017	Div I (1Y216)	Q	Div I (HV-E11-1F060A, 1F122A)	Q	
EK1E11012	M1-E11-66	010	Div I (FY-15189 Isolation Device)	Q	Div I (FT-E11-1N015A)	Q	
EK1E11012	M1-E11-66	010	Div I (FT-E11-1N007A)	Q	Div I (FY-11207A)	Q	
EK1E11012	M1-E11-66	011	Div I (PT-E11-1N026A)	Q	PI-E11-1R606A1	Non Class 1E	
EK1E11013	M1-E11-66	004	Div I (1D614)	Q	Div I (PS-E11-1N011A)	Q	
EK1E11013	M1-E11-66	004	Div I (1D614)	Q	Div I (PS-E11-1N021E,G)	Q	
EK1E11013	M1-E11-66	005	Div I (1D614)	Q	Div I (52AX-20201)	Q	
EK1E11014	M1-E11-66	005	Div I (1D614)	Q	Divi I (HV-E11-1F004C,6C	Q	R1
EK1E11015	M1-E11-66	004	Div I (1D614)	Q	Div I (PIS-B31-1N016A)	Q	
EK1E11015	M1-E11-66	004	Div I (1D614)	Q	Div I (FS-E11-1N021A)	Q	
EK1E11015	M1-E11-66	004	Div I (1D614)	Q	Div I (Z1X-F008)	Q	
EK1E11015	M1-E11-66	004	Div I (1D614)	Q	Div I (52A-20102)	Q	
EK1E11015	M1-E11-66	005	Div I (1D614)	Q	Div I (HV-E11-1F004A)	Q	
EK1E11015	M1-E11-66	005	Div I (1D614)	Q	Div I (HV-E11-1F006A)	Q	
EK1E11016	M1-E11-66	005	Div I (1D614)	Q	Divi I (52AX-20404, 09))	Q	
EK1E11016	M1-E11-66	016	Div I (1B236)	Q	Divi I (HV-E11-1F027A)	Q	
EK1E11018	M1-E11-66	019	Div I (1Y216)	Q	Divi I (HV-E51-1F050B)	Q	

Q Loads in Contact with PI-E11-1R606A1

CABLES	DWG	SH	FROM	SEPGR(FRM)	TO	SEPGR(TO)	ISOLATED
EK1E11020	M1-E11-66	016	Div I (1B217)	Q	Div I (HV-E11-1F016A)	Q	
EK1E11021	M1-E11-66	007	Div I (1B216)	Q	Div I (HV-E11-1F028A)	Q	
EK1E11022	M1-E11-66	007	Div I (1B237)	Q	Divi I (HV-E11-1F024A)	Q	
EK1E11022	M1-E11-66	007	Div I (1B217)	Q	Divi I (HV-E11-1F021A)	Q	
EK1E11023	M1-E11-66	017	Div I (1Y216)	Q	Div I (HV-E11-1F050A)	Q	
EK1E21008	M1-E21-35	005	Div I (PT-E21-1N001A)	Q	Div I (PI-E21-1R60OA)	Q	
EK1E21008	M1-E21-35	005	Div I (FT-E21-1N003A)	Q	Div I (FI-E21-1R601A)	Q	
EK1E41001	M1-E41-69	005	Div I (1D614-07)	Q	Div I (K63 -E41)	Q	
EK1E41001	M1-E41-69	005	Div I (1D614-07)	Q	Div I (K45 -E41)	Q	
EK1E41001	M1-E41-69	005	Div I (1D614-07)	Q	Div I (K62 -E41)	Q	
EK1E41001	M1-E41-69	009	Div I (1D614-07)	Q	Div I (HV-E41-1F026)	Q	
EK1E41001	M1-E41-69	009	Div I (1Y216-07)	Q	Div I (HV-E41-1F100)	Q	
EK1E41001	M1-E41-69	009	Div I (1D614-07)	Q	Div I (HV-E41-1F028)	Q	
EK1E41002	M1-E41-69	005	Div I (1D614-07)	Q	Div I (K43 -E41)	Q	
EK1E41002	M1-E41-69	005	Div I (1D614-07)	Q	Div I (K46 -E41)	Q	
EK1E41004	M1-E41-69	008	Div I (HV-E41-1F079)	Q	Div I (42 Contactor)	Q	
EK1E51015	M1-E51-90	006	Div I (1D614-07)	Q	Div I (EGM Control)	Q	
EK1P8F201	M1-B31-275	014	Div I (1B219)	Q	Div I (K99A, K37A-E11A)	Q	
EK1P8F201	M1-B31-275	016	Div I (1B219)	Q	Div I (K99A, K37A-E11A)	Q	

R1

Q Loads in Contact with PI-E11-1R606A1

CABLES	DWG	SH	FROM	SEPGR(FRM)	TO	SEPGR(T0)	ISOLATED
EK1P8X801	M1-B31-275	014	Div I (K39B -E11)	Q	Div I (HV-B31-1F023A)	Q	
EK1P8X801	M1-B31-275	014	Div I (K39B -E11)	Q	Div I (HV-B31-1F023A)	Q	
EK1P8X801	M1-B31-275	014	Div I (K39B -E11)	Q	Div I (HV-B31-1F031A)	Q	
EK1P8X801	M1-B31-275	014	Div I (K37A -E11)	Q	Div I (HV-B31-1F031A)	Q	
EK1PC1701	M1-C41-36	003	Div I (1B236081)	Q	Div I (K2A -C41)	Q	
EK1PC1705	M1-C41-36	003	Div I (1Y216-07)	Q	Div I (XV-C41-1F004A,B)	Q	
EK1PC1706	M1-C41-36	003	Div I (1B217-061)	Q	Div I (K2B -C41)	Q	
EK1PM1304	M1-E11-66	017	Div I (1Y216)	Q	Div I (HV-E11-1F060A, 1F122A)	Q	
EK1PM1308	M1-E11-66	019	Div I (HV-E11-1F122B)	Q	Division I	Q	
EK1PM1309	M1-E11-66	013	Div I (1Y216)	Q	Div I (RHR Sys 1 Status)	Q	R1
EK1PM1701	M1-E11-66	011	Div I (1D614)	Q	Div I (HV-E11-1F103A,4A)	Q	
EK1PM1701	M1-E11-66	013	Div I (1Y216)	Q	Div I (RHR SYS1 Staus)	Q	
EK1PM1701	M1-E11-66	013	Div I (1Y216)	Q	Div I (RHR SYS1 Staus)	Q	
EK1PM1702	M1-E11-66	004	Div I (1D614)	Q	Div I (S32A)	Q	
EK1PM1702	M1-E11-66	005	Div I (1D614)	Q	Div I (S17A)	Q	
EK1PM1702	M1-E11-66	005	Div I (1D614)	Q	Div I (S3A)	Q	
EK1PM1703	M1-E11-66	004	Div I (1D614)	Q	Div I (S20A, S56A)	Q	
EK1PM1703	M1-E11-66	006	Div I (1D614)	Q	Div I (S1A, S56A)	Q	
EK1PM1703	M1-E11-66	017	Div I (K84)	Q	Div I (HV-E11-1F007A)	Q	

Q Loads in Contact with PI-E11-1R606A1

CABLES	DWG	SH	FROM	SEPGR(FRM)	TO	SEPGR(TO)	ISOLATED
EK1PM1704	M1-E11-66	005	Div I (1D614)	Q	Div I (S3C)	Q	
EK1PM1704	M1-E11-66	017	Div I (1Y216)	Q	Div I (HV-E11-1F050A)	Q	
EK1PM1707	M1-E11-66	016	Div I (1B217)	Q	Div I (HV-E11-1F016A)	Q	
EK1PM1707	M1-E11-66	016	Div I (1B216)	Q	Div I (HV-E11-1F028A)	Q	
EK1PM1708	M1-E11-66	016	Div I (1B237)	Q	Div I (HV-E11-1F024A)	Q	
EK1PM1708	M1-E11-66	016	Div I (1B236)	Q	Div I (HV-E11-1F027A)	Q	
EK1PM1709	M1-E11-66	016	Div I (1B217)	Q	Div I (HV-E11-1F021A,)	Q	
EK1PM1709	M1-E11-66	017	Div I (1B216)	Q	Div I (HV-E11-1F017A,)	Q	
EK1PM1710	M1-E11-66	017	Div I(HV-E11-1F015A)	Q	Div I (1B219)	Q	
EK1PM1715	M1-E11-66	019	Div I (HV-E51-1F050B)	Q	Div I (1Y216)	Q	R1
EK1PMX801	M1-E11-66	005	Div I (1D614)	Q	Div I (K2B)	Q	
EK1PMX801	M1-E11-66	006	Div I (1D614)	Q	Div I (K35B,K36B,K47B,K91B)	Q	
EK1PMX807	M1-E11-66	005	Div I (K201B)	Q	M1-E11-66	Q	
EK1PMX808	M1-E11-66	005	Div I (K200B)	Q	M1-E11-66	Q	
EK1PN1301	M1-E21-35	005	Div I (FT-E21-1N003A)	Q	Div I (FI-E21-1R601A)	Q	
EK1PN1301	M1-E21-35	005	Div I (PT-E21-1N001A)	Q	PI-E21-1R600A	Non Class 1E	
EK1PP1701	M1-E41-69	003	Div I (1Y216-07)	Q	Div I (1C601)	Q	
EK1PP1702	M1-E41-69	003	Div I (1D614-07)	Q	Div I (K39 -E41)	Q	
EK1PP1702	M1-E41-69	003	Div I (1D614-07)	Q	Div I (HV-E41-1F100)	Q	

Q Loads in Contact with PI-E11-1R606A1

CABLES	DWG	SH	FROM	SEPGR(FRM)	TO	SEPGR(TO)	ISOLATED
EK1PP1702	M1-E41-69	003	Div I (1D614-07)	Q	Div I (HV-E41-1F026)	Q	
EK1PP1702	M1-E41-69	003	Div I (1D614-07)	Q	Div I (HV-E41-1F028)	Q	
EK1PP1702	M1-E41-69	003	Div I (1D614-07)	Q	Div I (HV-E41-1F028)	Q	
EK1PP1703	M1-E41-69	008	Div I (HV-E41-1F079)	Q	Div I Indicating Lights)	Q	
EK1PP1705	M1-E41-69	008	Div I (HV-E41-1F079)	Q	Div I (42 Contactor)	Q	
EK1PP1707	M1-E41-69	007	Div I (HV-E41-1F002)	Q	Div I (42 Contactor)	Q	
EK1PPX701	M1-E41-69	005	Div I (1D614-07)	Q	Div I (K44 -E41)	Q	
EK1PPXX01	M1-E41-69	009	Div I (1D614-07)	Q	Div I (HV-E41-1F028)	Q	
EK1PQ1301	M1-E51-90	005	Div I (ES-E11-1K600)	Q	Div I (Distribution Bus)	Q	
EK1PQ1301	M1-E51-90	005	Div I (ES-E11-1K600)	Q	Div I (K47)	Q	
EK1Q0108E	M1-B21-131	011	Div I (1Y216-07)	Q	Div I (HV-B31-1F013)	Q	
EK1Q0200H	E-166	001	Div I (1B236081)	Q	Div I (K7A (1C690A)	Q	
EK1Q0201H	E-166	002	Div I (1B217061)	Q	Div I (K7B -1C690B)	Q	
EK1Q0627F	E-304	001	Div I (HV-16116A1)	Q	Div I (Iso Mux XIT-15701A)	Q	
EK1Q0627F	E-304	001	Div I (HV-16108A1)	Q	Div I (Iso Mux XIT-15701A)	Q	
EK1Q0627G	E-304	011	Div I (TIP Ball Valve)	Q	Div I (Iso Mux XIT-15701A)	Q	
EK1Q0837E	E-304	007	Div I (HV-E21-1F015A)	Q	Div I (Iso Mux XIT-15701A)	Q	
EK1Q1334D	E-304	006	Div I (HV-E51-1F062)	Q	Div I (Iso Mux XIT-15701A)	Q	
EK1Q1334D	E-304	006	Div I (HV-E51-1F008)	Q	Div I (Iso Mux XIT-15701A)	Q	

R1

Q Loads in Contact with PI-E11-1R606A1

CABLES	DWG	SH	FROM	SEPGR(FRM)	TO	SEPGR(TO)	ISOLATED
EK1Q1550D	E-304	010	Div I (HV-B21-1F022B)	Q	Div I (Iso Mux XIT-15701A)	Q	
EK1Q1550D	E-304	010	Div I (HV-B21-1F022A)	Q	Div I (Iso Mux XIT-15701A)	Q	
EK1Q1550E	E-304	010	Div I (HV-B21-1F016)	Q	Div I (Iso Mux XIT-15701A)	Q	
EK1Q1550E	E-304	010	Div I (HV-B21-1F001)	Q	Div I (Iso Mux XIT-15701A)	Q	
EK1Q1550F	E-304	010	Div I (HV-B21-1F022D)	Q	Div I (Iso Mux XIT-15701A)	Q	
EK1Q1550F	E-304	010	Div I (HV-B21-1F022C)	Q	Div I (Iso Mux XIT-15701A)	Q	
EK1Q1550G	E-304	009	Div I (HV-E11-1F009)	Q	Div I (Iso Mux XIT-15701A)	Q	
EK1Q1550G	E-304	009	Div I (HV-E11-1F040)	Q	Div I (Iso Mux XIT-15701A)	Q	
EK1Q1550G	E-304	009	Div I (HV-B31-1F019)	Q	Div I (Iso Mux XIT-15701A)	Q	R1
EK1Q1550H	E-304	009	Div I (SV-E11-1F079B)	Q	Div I (Iso Mux XIT-15701A)	Q	
EK1Q1550H	E-304	009	Div I (HV-B21-1F019)	Q	Div I (Iso Mux XIT-15701A)	Q	
EK1Q1550H	E-304	009	Div I (SV-E11-1F079A)	Q	Div I (Iso Mux XIT-15701A)	Q	
EK1Q4036D	E-304	007	Div I (HV-E41-1F079)	Q	Div I (Iso Mux XIT-15701A)	Q	
EK1Q4036D	E-304	007	Div I (HV-E41-1F100)	Q	Div I (Iso Mux XIT-15701A)	Q	
EK1Q4036E	E-304	007	Div I (HV-E41-1F002)	Q	Div I (Iso Mux XIT-15701A)	Q	
EK1Q4036E	E-304	007	Div I (HV-E11-1F021A)	Q	Div I (Iso Mux XIT-15701A)	Q	
EK1Q4037A	E-304	003	Div I (HV-E11-1F027A)	Q	Div I (Iso Mux XIT-15701A)	Q	
EK1Q4037A	E-304	003	Div I (HV-E11-1F028A)	Q	Div I (Iso Mux XIT-15701A)	Q	
EK1Q4037A	E-304	003	Div I (HV-E11-1F016A)	Q	Div I (Iso Mux XIT-15701A)	Q	

CABLES	DWG	SH	FROM	SEPGR(FRM)	TO	SEPGR(TO)	ISOLATED
EK1Q4037A	E-304	003	Div I (HV-E11-1F024A)	Q	Div I (Iso Mux XIT-15701A)	Q	
EK1Q4037D	E-304	007	Div I (HV-E11-1F022)	Q	Div I (Iso Mux XIT-15701A)	Q	
EK1Q4037E	E-304	007	Div I (HV-E11-1F008)	Q	Div I (Iso Mux XIT-15701A)	Q	
EK1Q4037F	E-304	012	Div I (HV-11314)	Q	Div I (Iso Mux XIT-15701A)	Q	
EK1Q4037G	E-304	014	Div I (SV-12661)	Q	Div I (Iso Mux XIT-15701A)	Q	
EK1Q4037G	E-304	014	Div I (SV-12671)	Q	Div I (Iso Mux XIT-15701A)	Q	
EK1Q4037H	E-304	014	Div I (SV-12651)	Q	Div I (Iso Mux XIT-15701A)	Q	
EK1Q4037J	E-304	009	Div I (HV-E11-1F015A)	Q	Div I (Iso Mux XIT-15701A)	Q	
EK1Q4037K	E-304	009	Div I (HV-12603)	Q	Div I (Iso Mux XIT-15701A)	Q	R1
EK1Q4037K	E-304	009	Div I (HV-15766)	Q	Div I (Iso Mux XIT-15701A)	Q	
EK1Q4037R	E-304	012	Div I (HV-11313)	Q	Div I (Iso Mux XIT-15701A)	Q	
EK1Q4189D	E-304	013	Div I (HV-15703)	Q	Div I (Iso Mux XIT-15701A)	Q	
EK1Q4189D	E-304	013	Div I (HV-15713)	Q	Div I (Iso Mux XIT-15701A)	Q	
EK1Q4189G	E-304	013	Div I (HV-15722)	Q	Div I (Iso Mux XIT-15701A)	Q	
EK1Q4189G	E-304	013	Div I (HV-15725)	Q	Div I (Iso Mux XIT-15701A)	Q	
EK1Q4189H	E-304	013	Div I (SV-15737)	Q	Div I (Iso Mux XIT-15701A)	Q	
EK1Q4189H	E-304	013	Div I (SV-15767)	Q	Div I (Iso Mux XIT-15701A)	Q	
EK1Q4189J	E-304	013	Div I (SV-15737)	Q	Div I (Iso Mux XIT-15701A)	Q	
EK1Q4189J	E-304	013	Div I (SV-15742A)	Q	Div I (Iso Mux XIT-15701A)	Q	

Q Loads in Contact with PI-E11-1R606A1

CABLES	DWG	SH	FROM	SEPGR(FRM)	TO	SEPGR(TO)	ISOLATED
EK1Q4189J	E-304	013	Div I (SV-15740A)	Q	Div I (Iso Mux XIT-15701A)	Q	
EK1Q4235E	E-304	016	Div I (AR-15745A)	Q	Div I (Iso Mux XIT-15701A)	Q	
EK1V2618D	E-304	004	Div I (HV-18782A2)	Q	Div I (Iso Mux XIT-15701A)	Q	
EK1V2618D	E-304	004	Div I (HV-18792A1)	Q	Div I (Iso Mux XIT-15701A)	Q	
EK1V2618D	E-304	004	Div I (HV-18722A2)	Q	Div I (Iso Mux XIT-15701A)	Q	
EK1V2618D	E-304	004	Div I (HV-18782B1)	Q	Div I (Iso Mux XIT-15701A)	Q	
EK1V2618D	E-304	004	Div I (HV-18782B2)	Q	Div I (Iso Mux XIT-15701A)	Q	
EK1V2618D	E-304	004	Div I (HV-18792B1)	Q	Div I (Iso Mux XIT-15701A)	Q	
EK1V2618D	E-304	004	Div I (HV-18792B2)	Q	Div I (Iso Mux XIT-15701A)	Q	
EK1V2618D	E-304	004	Div I (HV-18782A1)	Q	Div I (Iso Mux XIT-15701A)	Q	
EK1V2618E	E-304	002	Div I (HV-18781A2)	Q	Div I (Iso Mux XIT-15701A)	Q	
EK1V2618E	E-304	002	Div I (HV-18781A1)	Q	Div I (Iso Mux XIT-15701A)	Q	
EK1V2618F	E-304	002	Div I (HV-18791A1)	Q	Div I (Iso Mux XIT-15701A)	Q	
EK1V2618F	E-304	002	Div I (HV-18791A2)	Q	Div I (Iso Mux XIT-15701A)	Q	
EK1Y0013L	E-064	016	Div I (1Y236-21)	Q	Div I (XV-C41-1F004A)	Q	
EM0I1104F	J-411	005	Div I (TE-01106A)	Q	Div I (TT-01106A)	Q	
EM1E51014	M1-E51-90	006	Div I (FT-E51-1N003)	Q	Div I (FY-E51-1K601)	Q	
EM1E51014	M1-E51-90	006	Div I (PT-E51-1N004,5,7,8)	Q	PI-E51-1R601,2,3,4	Non Class 1E	
EM1I1211C	J-451	015	Div I (TE-E11-1N027A (RTD))	Q	Div I (TT-15127A)	Q	

R1

Q Loads in Contact with PI-E11-1R606A1

CABLES	DWG	SH	FROM	SEPGR(FRM)	TO	SEPGR(TO)	ISOLATED
EM1I1211D	J-451	015	Div I (TT-15127A)	Q	Div I (TI-15127A)	Q	
EM1I2603C	J-426	003	Div I (PY-12644A)	Q	Div I (PT-12644)	Q	
EM1I2603D	J-426	003	Div I (PY-12644)	Q	Div I (PT-12644)	Q	
EM1I4202D	J-442	001	Div I (LT-14201A)	Q	Div I (LY-14201A)	Q	
EM1I4202E	J-442	001	Div I (LT-14203A)	Q	Div I (LY-14203A)	Q	
EM1I4202H	J-442	001	Div I (LT-14203A)	Q	Div I (LI-14203A)	Q	
EM1I4202J	J-442	001	Div I (LT-14202A)	Q	Div I (LR-14202)	Q	
EM1I4202K	J-442	001	Div I (LT-14201A,2A,3A)	Q	Div I (Iso Mux XIT-15701B)	Q	
EM1I4202L	J-442	001	Div I (LT-14202A)	Q	Div I (LY-14202A)	Q	
EM1I4202M	J-442	001	Div I (PT-14201A)	Q	Divi I (1C651)	Q	
EM1I4202N	J-442	001	Div I (LT-14203A)	Q	Div I (LI-14201A1)	Q	
EM1I5101D	J-470	002	Div I (FT-15120A)	Q	Div I (FY-15120A)	Q	
EM1I5101E	J-470	002	Div I (FT-15121A)	Q	Div I (FY-15121A)	Q	
EM1I5101F	J-470	002	Div I (FY-15120A)	Q	Div I (FI-15120A)	Q	
EM1I5707A	J-457	003	Div I (PT-15729A)	Q	Div I (PR-15710A)	Q	
EM1J25301	J-457	002	Div I (LT-15775A)	Q	Div I (LR-15776A)	Q	
EM1J45101	J-457	002	Div I (LSL-15775A)	Q	Div I (LI-15775A)	Q	
EM1J45102	J-457	002	Div I (PMA1 Power Supply)	Q	Div I (LR-15775A)	Q	
EM1J45102	J-457	002	Div I (LT-15775A,6A)	Q	Div I (LR-15775A)	Q	

R1

Q Loads in Contact with PI-E11-1R606A1

CABLES	DWG	SH	FROM	SEPGR(FRM)	TO	SEPGR(TO)	ISOLATED
EM1J45102	J-457	003	Div I (PT-15709A,10A)	Q	Div I (PR-15710A)	Q	
EM1J45102	J-457	007	Div I (TT-15790A)	Q	Div I (TR-15790A1)	Q	
EM1PM1302	M1-E11-66	010	Div I (FY-E11-1K600A)	Q	Div I (FI-E11-1R603A)	Q	
EM1PM1302	M1-E11-66	010	Div I (PT-E11-1N026A)	Q	PI-E11-1R606A1	Non Class 1E	
EM1PQ1302	M1-E51-90	006	Div I (PT-E51-1N004,5,7,8)	Q	PI-E51-1R601,2,3,4	Non Class 1E	
EM1PQ1302	M1-E51-90	006	Div I (FY-14989 Isolation Device))	Q	Div I (FY-E51-1K601)	Q	
EM1Q0043B	J-457	012	Div I (RE-15720A)	Q	Div I (RITS-15720A)	Q	
EM1Q0043C	J-457	012	Div I (RE-15720A)	Q	Div I (RITS-5720A)	Q	R1
EM1Q0043G	J-457	012	Div I (RY-15721A)	Q	Div I (RR-15720A)	Q	
EM1Q0045G	J-457	015	Div I (NT-15725A)	Q	Div I (NIT-15725A)	Q	
EM1Q0836D	E-304	018	Div I (PT-E21-1N001A)	Q	Div I (Iso Mux XIT-15701A)	Q	
EM1Q0836D	E-304	018	Div I (FT-E21-1N003A)	Q	Div I (Iso Mux XIT-15701A)	Q	
EM1Q0836F	E-304	019	LITS-B21-1N026B (Mech Sw See App C for Eval.)	Q	Div I (Iso Mux XIT-15701A)	Q	
EM1Q1319D	J-449	002	Div I (FC-E51-1R600)	Q	Div I (Ramp/Signal Converter)	Q	
EM1Q1319E	J-449	002	Div I (EGM CTL E51-C002)	Q	SI-15001A	Non Class 1E	
EM1Q4189A	E-304	018	Div I (PT-15729A)	Q	Div I (Iso Mux XIT-15701A)	Q	
EM1Q4189K	E-304	017	Div I (TT-15799A)	Q	Div I (Iso Mux XIT-15701A)	Q	
EM1Q4189K	E-304	017	Div I (TT-15790A)	Q	Div I (Iso Mux XIT-15701A)	Q	
EM1Q4189L	E-304	017	Div I (PT-15710A)	Q	Div I (Iso Mux XIT-15701A)	Q	

Q Loads in Contact with PI-E11-1R606A1

CABLES	DWG	SH	FROM	SEPGR(FRM)	TO	SEPGR(TO)	ISOLATED
EM1Q4189L	E-304	017	Div I (PT-15709A)	Q	Div I (Iso Mux XIT-15701A)	Q	
EM1Q4189M	E-304	017	Div I (LT-15775A)	Q	Div I (Iso Mux XIT-15701A)	Q	
EM1Q4189M	E-304	017	Div I (LT-15776A)	Q	Div I (Iso Mux XIT-15701A)	Q	
EM1Q4235E	E-304	016	Div I (AR-15746A)	Q	Div I (Iso Mux XIT-15701A)	Q	
EM1Q4235E	E-304	016	Div I (AR-15745A)	Q	Div I (Iso Mux XIT-15701A)	Q	
EM1Q4235F	E-304	016	Div I (TX-15751)	Q	Div I (Iso Mux XIT-15701A)	Q	
EM1Q4237D	E-304	019	Div I (RY-15721A)	Q	Div I (Iso Mux XIT-15701A)	Q	
EM1S1729C	E-267	002	Div I (1C201A)	Q	Div I (1C690A)	Q	
JM1Q0707T	J-444	004	Ch A Aff (Thermocouple)	Q	TRS-G33-1N604	Non Class 1E	
NM1PR4101	M1-G33-153	004	FT-G33-1N037 (Press Boundary)	Q	FI-G33-1R610	Non Class 1E	
PK1Q0839G	E-064	032	Div I Affiliated (1Y688)	Q	1C699A	Non Class 1E	YES

R1

Q Loads in Contact with PI-E11-1R606B1

CABLES	DWG	SH	FROM	SEPGR(FRM)	TO	SEPGR(TO)	ISOLATED
BK1E11004	M1-E11-66	006	Ch B (1D624)	Q	Ch B (K10A)	Q	
BK1E11004	M1-E11-66	015	Ch B (1D624)	Q	Ch B (74 Relays from valves))	Q	
BK1E36003	E-184	004	Ch B (1D624)	Q	Ch B (K11B)	Q	
BK1PN2703	M1-E21--35	006	Ch B (1B227)	Q	Ch B (HV-E21-1F004B)	Q	
BK1PN2703	M1-E21--35	006	Ch B (1D624)	Q	Ch B (1P206B)	Q	
FK1E11002	M1-E11-66	007	Div II (1D624)	Q	Div II (K7B,8B Relays)	Q	
FK1E11003	M1-E11-66	007	Div II (1D624)	Q	Div II (Z12X-1F009)	Q	
FK1E11003	M1-E11-66	007	Div II (1D624)	Q	Div II (52a-20202)	Q	
FK1E11003	M1-E11-66	007	Div II (1D624)	Q	Div II (HV-E11-1F008)	Q	
FK1E11003	M1-E11-66	007	Div II (1D624)	Q	Div II (PIS-B31-1N018B)	Q	
FK1E11003	M1-E11-66	007	Div II (1D624)	Q	Div II (FS-E11-1N021B)	Q	
FK1E11003	M1-E11-66	008	Div II (1D624)	Q	Div II (HV-E11-1F006B)	Q	
FK1E11005	M1-E11-66	018	Div II (1B246)	Q	Div II (HV-E11-1F048B)	Q	
FK1E11006	M1-E11-66	018	Div II (1B226)	Q	Div II (HV-E11-1F016B)	Q	
FK1E11006	M1-E11-66	019	Div II (1B229)	Q	Div II (HV-E11-1F015B)	Q	
FK1E11007	M1-E11-66	018	Div II (1B246)	Q	Div II (HV-E11-1F027B)	Q	
FK1E11007	M1-E11-66	019	Div II (1B226)	Q	Div II (HV-E11-1F028B)	Q	
FK1E11008	M1-E11-66	018	Div II (1B227)	Q	Div II (HV-E11-1F024B)	Q	
FK1E11008	M1-E11-66	018	Div II (1B227)	Q	Div II (HV-E11-1F021B)	Q	

RI

Q Loads in Contact with PI-E11-1R606B1

CABLES	DWG	SH	FROM	SEPGR(FRM)	TO	SEPGR(TO)	ISOLATED
FK1E11017	M1-E11-66	011	Div II (PT-E11-1N026B)	Q	PI-E11-1R606B1	Non Class 1E	
FK1E11018	M1-E11-66	019	Div II (1Y226)	Q	Divi II (HV-E11-1F060B)	Q	
FK1E41003	M1-E41-69	005	Div II (1D624)	Q	Div II (LIS-B21-1N031B)	Q	
FK1E41003	M1-E41-69	007	Div II (1D264)	Q	Div II (HV-E41-1F003)	Q	
FK1E41004	M1-E41-69	008	Div II (1D264)	Q	Div II (HV-E41-1F006)	Q	
FK1E41004	M1-E41-69	009	Div II (1D624)	Q	Div II (LSH-E41-1N014, S14)	Q	
FK1P81805	M1-E51-90	009	Div II (1D624)	Q	Div II (HV-E51-1F0005,26,88).	Q	
FK1P81807	M1-E51-90	011	Div II (K55 Relay)	Q	Div II (RCIC Status)	Q	
FK1PM1201	M1-E11-66	014	Div II (1Y226)	Q	FR-E11-1R608	Non Class 1E	
FK1PM1203	M1-E11-66	014	Div II (1Y226)	Q	Div II (RHR Sys 2 Status)	Q	
FK1PM1206	M1-E11-66	019	Div II (1Y226)	Q	Div II (HV-E11-1F060B)	Q	
FK1PM1801	M1-E11-66	019	Div II (1B229)	Q	Div II (HV-E11-1F015B)	Q	
FK1PM1803	M1-E11-66	007	Div II (1D246)	Q	Div II (S32B)	Q	
FK1PM1803	M1-E11-66	008	Div II (1D246)	Q	Div II (S17B, S3B)	Q	
FK1PM1804	M1-E11-66	007	Div II (1D624)	Q	Div II (S20B, S56B)	Q	
FK1PM1804	M1-E11-66	008	Div II (1D624)	Q	Div II (S3B)	Q	
FK1PM1804	M1-E11-66	009	Div II (1D624)	Q	Div II (S1B, S56B)	Q	
FK1PM1809	M1-E11-66	018	Div II (1B246)	Q	Div II (HV-E11-1F027B)	Q	
FK1PM1809	M1-E11-66	018	Div II (1B247)	Q	Div II (HV-E11-1F024B)	Q	

R1

Q Loads in Contact with PI-E11-1R606B1

CABLES	DWG	SH	FROM	SEPGR(FRM)	TO	SEPGR(TO)	ISOLATED
FK1PM1810	M1-E11-66	018	Div II (1B227)	Q	Div II (HV-E11-1F021B)	Q	
FK1PM1810	M1-E11-66	019	Div II (1B226)	Q	Div II (HV-E11-1F017B)	Q	
FK1PM1813	M1-E11-66	018	Div II (1B227')	Q	Div II (HV-E11-1F021B)	Q	
FK1PMX804	M1-E11-66	008	Div II (1D624)	Q	Div II (K9A)	Q	
FK1PMX804	M1-E11-66	019	Div II (1B229)	Q	Div II (K67A)	Q	
FK1PMX806	M1-E11-66	008	Div II (1D624)	Q	Div II (K200A)	Q	
FK1PN2701	M1-E21-35	008	Div II (1Y226)	Q	Div II (CS.Sys 2 Status)	Q	
FK1PN2702	M1-E21-35	006	Div II (1B247)	Q	Div II (HV-E21-1F015B)	Q	
FK1PN2702	M1-E21-35	006	Div II (1B227)	Q	Div II (HV-E21-1F004B)	Q	R1
FK1PN2704	M1-E21-35	004	Div II (1D624)	Q	Div II (S1B,5B,16B,17B)	Q	
FK1PN2704	M1-E21-35	006	Div II (1B227)	Q	Div II (HV-E21-1F005B)	Q	
FK1PN2705	M1-E21-35	006	Div II (1B227)	Q	Div II (HV-E21-1F005B)	Q	
FK1PN2705	M1-E21-35	006	Div II (1Y226)	Q	Div II (HV-E21-1F006B,7B)	Q	
FK1PN2706	M1-E21-35	006	Div II (1Y226)	Q	Div II)HV-E21-1F037B)	Q	
FK1PNT702	M1-E21-35	004	Div II (1D624)	Q	Div II (K32A)	Q	
FK1PP1201	M1-E41-69	003	Div II (ES-E41-1K600)	Q	Div II (K50, FC-E41-1R600)	Q	
FK1PP1202	M1-E41-69	011	Div II (K50)	Q	Div II (HPCI Status)	Q	
FK1PP1204	M1-E41-69	011	Div II (K 50)	Q	Div II (S2)	Q	
FK1PP2001	M1-E41-69	003	Div II (K35, K1)	Q	Div II (HPCI Status)	Q	

Q Loads in Contact with PI-E11-1R606B1

CABLES	DWG	SH	FROM	SEPGR(FRM)	TO	SEPGR(T0)	ISOLATED
FK1PP2001	M1-E41-69	003	Div II (1Y226)	Q	Div II (HPCI Status)	Q	
FK1PP2002	M1-E41-69	004	Div II (1D624)	Q	Div II (S25)	Q	
FK1PP2002	M1-E41-69	008	Div II (1D264)	Q	Div II (HV-E11-1F011)	Q	
FK1PP2003	M1-E41-69	008	Div II (1D264)	Q	Div II (HV-E41-1F059)	Q	
FK1PP2003	M1-E41-69	008	Div II (1D274)	Q	Div II (HV-E41-1F006)	Q	
FK1PP2004	M1-E41-69	008	Div II (1D274)	Q	Div II (HV-E41-1F075)	Q	
FK1PP2004	M1-E41-69	008	Div II (1D264)	Q	Div II (HV-E41-1F042)	Q	
FK1PP2004	M1-E41-69	009	Div II (1D624)	Q	Div II (HV-E41-1F054)	Q	
FK1PP2005	M1-E41-69	007	Div II (1D274)	Q	Div II (HV-E41-1F008)	Q	
FK1PP2005	M1-E41-69	008	Div II (1D264)	Q	Div II (HV-E41-1F004)	Q	
FK1PP2005	M1-E41-69	009	Div II (1D624)	Q	Div II (HV-E41-1F054)	Q	
FK1PP2006	M1-E41-69	007	Div II (1D274)	Q	Div II (HV-E41-1F007)	Q	
FK1PP2006	M1-E41-69	007	Div II (1D624)	Q	Div II (HV-E41-1F025)	Q	
FK1PP2006	M1-E41-69	007	Div II (1D264)	Q	Div II (HV-E41-1F012)	Q	
FK1PP2007	M1-E41-69	007	Div II (1D264)	Q	Div II (HV-E41-1F001,3)	Q	
FK1PP2007	M1-E41-69	009	Div II (1D624)	Q	Div II (HV-E41-1F029)	Q	
FK1PP2008	M1-E41-69	004	Div II (1D624)	Q	Div II (S20, S19)	Q	
FK1PP2008	M1-E41-69	005	Div II (1D624)	Q	Div II (S18)	Q	
FK1PP2008	M1-E41-69	009	Div II (1D624)	Q	Div II (HPCI Tur Stop Valve))	Q	

RI

Q Loads in Contact with PI-E11-1R606B1

CABLES	DWG	SH	FROM	SEPGR(FRM)	TO	SEPGR(TO)	ISOLATED
FK1PP2008	M1-E41-69	009	Div II (1D624)	Q	Div II (HV-E41-1F029)	Q	
FK1PP2009	M1-E41-69	004	Div II (1D624)	Q	Div II (S32, 33)	Q	
FK1PP2009	M1-E41-69	007	Div II (1D274)	Q	Div II (1P213)	Q	
FK1PP2009	M1-E41-69	007	Div II (1D274)	Q	Div II (1P215,6)	Q	
FK1PP2011	M1-E41-69	007	Div II (1D264)	Q	Div II (HV-E41-1F003)	Q	
FK1PP2011	M1-E41-69	008	Div II (1D264)	Q	Div II (HV-E41-1F075)	Q	
FK1PP2012	M1-E41-69	008	Div II (1D264)	Q	Div II (HV-E41-1F004,6)	Q	
FK1PP2013	M1-E41-69	007	Div II (1D264)	Q	Div II (HV-E41-1F012)	Q	
FK1PP2X01	M1-E41-69	005	Div II (1D624)	Q	Div II (S4B)	Q	R1
FK1PPXX03	M1-E41-69	004	Div II (1D624)	Q	Div II (K44, K45)	Q	
FK1PQ1802	M1-E51-90	005	Div II (1Y226)	Q	Div II (RCIC Status)	Q	
FK1PQ1802	M1-E51-90	011	Div II (K33, K43 Relays)	Q	Div II (RCIC Status)	Q	
FK1PQ1803	M1-E51-90	008	Div II (1D264)	Q	Div II (HV-E51-1F084)	Q	
FK1PQ1804	M1-E51-90	004	Div II (1D624)	Q	Div II (S26)	Q	
FK1PQ1804	M1-E51-90	009	Div II (1D624)	Q	Div II (HV-E51-1F0005,26,88)	Q	
FK1PQ1804	M1-E51-90	009	Div II (1D624)	Q	Div II (S11B, S12B)	Q	
FK1PQD103	M1-E51-90	004	Div II (1D624)	Q	Div II (K40 Relay)	Q	
FK1PQX801	M1-E51-90	004	Div II (1D624)	Q	Div II (S3B-B21B)	Q	
FM1E11002	M1-E11-66	009	Div II (1D624)	Q	Div II (K19B-E21A)	Q	

Q Loads in Contact with PI-E11-1R606B1

CABLES	DWG	SH	FROM	SEPGR(FRM)	TO	SEPGR(TO)	ISOLATED
FM1E11003	M1-E11-66	010	Div II (FT-E11-1N015B)	Q	Div II (FY-E11-1K600B)	Q	
FM1E11003	M1-E11-66	010	Div II (FT-E11-1N007B)	Q	Div II (FY-11207B2)	Q	
FM1E11004	M1-E11-66	007	Div II (1D624)	Q	Div II (PS-E11-1N011B)	Q	
FM1E11004	M1-E11-66	007	Div II (1D624)	Q	Div II (K110A-U2)	Q	
FM1E11004	M1-E11-66	007	Div II (1D624)	Q	Div II (LIS-B21-1N013D)	Q	
FM1E11004	M1-E11-66	008	Div II (1D624)	Q	Div II (52AX-20101)	Q	
FM1E11004	M1-E11-66	009	Div II (1D624)	Q	Div II (PIS-B21-1N021B,D)	Q	
FM1E11005	M1-E11-66	008	Div II (1D624)	Q	Div II (HV-E11-1F006D, 4D))	Q	
FM1E11006	M1-E11-66	007	Div II (1D624)	Q	Div II (52AX, 52BX)	Q	
FM1E21001	M1-E21-35	006	Div II (PT-E21-1N001B)	Q	Div II (PI-E21-1R600B)	Q	
FM1E21001	M1-E21-35	006	Div II (FT-E21-1N003B)	Q	Div II (FI-E21-1R601B)	Q	
FM1E41002	M1-E41-69	006	Div II (PT-E41-1N008.09.13,)	Q	PI-E41-1R602,3,6	Non Class 1E	
FM1E41002	M1-E41-69	006	Div II (PT-E41-1N016)	Q	Div II (PI-E41-1R601)	Q	
FM1E51001	M1-E51-90	004	Div II (1D624)	Q	Div II (LIS-B21-1N024C)	Q	
FM1E51001	M1-E51-90	004	Div II (1D624)	Q	Div II (PSL-E51-1N014B)	Q	
FM1E51001	M1-E51-90	004	Div II (1D624)	Q	Div II (PDIS-E51-1N018)	Q	
FM1E51001	M1-E51-90	008	Div II (1D264)	Q	Div II (HV-E51-1F084)	Q	
FM1E51002	M1-E51-90	004	Div II (1D624)	Q	Div II (PSH-E51-1N012B)	Q	
FM1E51002	M1-E51-90	004	Div II (1D624)	Q	Div II (PSL-E51-1N019D)	Q	

R1

Q Loads in Contact with PI-E11-1R606B1

CABLES	DWG	SH	FROM	SEPGR(FRM)	TO	SEPGR(TO)	ISOLATED
FM1E51002	M1-E51-90	009	Div II (1D624)	Q	Div II (HV-E51-1F005,26,88))	Q	
FM1I1212D	E-153	035	Div II (TT-15127B)	Q	Div II (TI-15127B)	Q	
FM1I2604C	J-426	003	Div II (PT-12649)	Q	Div II (PI-12649)	Q	
FM1I4203H	J-442	003	Div II (LT-14203B)	Q	Div II (LI-14203B)	Q	
FM1I4203J	J-442	003	Div II (LT-14202B)	Q	Div II (LR-14202)	Q	
FM1I4203M	J-442	003	Div II (PT-14201B)	Q	Divi II (1C651)	Q	
FM1I4203N	J-442	003	Div II (LT-14203B)	Q	Div I (LI-14201B1)	Q	
FM1I5102F	J-470	002	Div II (FY-15120B,21B)	Q	Div II (FI-15120B)	Q	
FM1I5706G	J-457	003A	Div II (PT-15729B)	Q	Div II (PY-15729B)	Q	R1
FM1I5708B	J-457	003A	Div II (PT-15729B)	Q	Div II (PR-15710B)	Q	
FM1J2V301	J-411	003	Div II (PT-01107B)	Q	Div II (PI-01107B)	Q	
FM1J2V301	J-411	003	Div II (FY-01109B)	Q	Div II (FI-01109B)	Q	
FM1J2V301	J-411	005	Div II (TT-01106B)	Q	Div II (TI-01106B)	Q	
FM1J45201	J-457	002A	Div II (LSL-15775B)	Q	Div II (LI-15775B)	Q	
FM1J45202	J-457	002A	Divi II (LT-15775B)	Q	Div II (LR-15776B)	Q	
FM1J45202	J-457	002A	Divi II (PMA1 Power Supply)	Q	Div II (LR-15776B)	Q	
FM1J45202	J-457	003A	Divi II (PY-15709B,10B)	Q	Div II (PR-15710B)	Q	
FM1J45202	J-457	007A	Divi II (TT-15790B)	Q	Div II (TR-15790B1)	Q	
FM1PM1204	M1-E11-66	010	Div II (FY-E11-1K600B)	Q	Div II (FI-E11-1R603B)	Q	

Q Loads in Contact with PI-E11-1R606B1

CABLES	DWG	SH	FROM	SEPGR(FRM)	TO	SEPGR(TO)	ISOLATED
FM1PM1204	M1-E11-66	011	Div II (PT-E11-1N026B)	Q	PI-1R606B1	Non Class 1E	
FM1PN1201	M1-E21-35		Div II (PT-E21-1N003B)	Q	PI-E21-1R600B	Non Class 1E	
FM1PN1201	M1-E21-35	006	Div II (FT-E21-1N001B)	Q	Div I (FI-E21-1R601B)	Q	
FM1PP1203	M1-E41-69	006	Div II (PT-E41-1N0013,16,19)	Q	PI-E41-1R602,3,6	Non Class 1E	
FM1PP1203	M1-E41-69	006	Div II (PT-E41-1N009)	Q	Div I (PI-E41-1R601)	Q	
FM1Q0835D	E-304	018	FT-E11-1N003B (Press Boundary))	Q	Div II (Iso Mux XIT-15701B)	Q	
NK1Q0054A	J-439	008	RY-13961B (Isolation Device)	Q	ES-B31-1K600	Non Class 1E	YES
NM1Q0835F	E-304	018	PDT-C32-1N017 (Press Boundary)	Q	SPDS-NFL-004Z	Non Class 1E	
NM1Q0835F	E-304	018	PT-C32-1N008 (Press Boundary)	Q	SPDS-NFP-001Z	Non Class 1E	
NM1Q0835F	E-304	018	PT-C32-1N005 (Press Boundary)	Q	SPDS-NFP-002Z	Non Class 1E	
NM1Q0835F	E-304	018	PDT-C32-1N004C (Press Boundary)	Q	SPDS-NFL-003Z	Non Class 1E	
NM1Q0835F	E-304	018	PDT-C32-1N004B (Press Boundary)	Q	SPDS-NFL-002Z	Non Class 1E	
NM1Q0835F	E-304	018	PDT-C32-1N004A (Press Boundary)	Q	SPDS-NFL-001Z	Non Class 1E	

R1

Q Loads in Contact with PI-E21-1R600A

CABLES	DWG	SH	FROM	SEPGR(FRM)	TO	SEPGR(TO)	ISOLATED
AK00ZZ001			Channel A	Q	Channel A	Q	
AK0G0300R	E-259	010	Ch A (0C653)	Q	Ch A (OC521A)	Q	
AK0G0301H	E-259	001	Ch A (0C653)	Q	Ch A (LSH-01103A)	Q	
AK0G0301K	E-259	001	Ch A (0C653)	Q	Ch A (OC519A)	Q	
AK0G2001C	E-105	001	Ch A (1A20104)	Q	Ch A (1A20104 Control)	Q	
AK0G2009C	E-105	009	Ch A (2A20104)	Q	Ch A (2A20104 Control)	Q	
AK0G2401L	E-023	006	Ch A (0C512A)	Q	Ch A (XI-00033A)	Q	
AK0Q6003C	E-184	002	Ch A (1D614)	Q	Ch A (0C521A)	Q	
AK0S0404C	E-146	009	Ch A (0B516)	Q	Ch A (HV-01112A)	Q	
AK0S0405C	E-146	009A	Ch A (0B516)	Q	Ch A (HV-01122A)	Q	
AK0S0412C	E-146	010	Ch A (0B516)	Q	Ch A (HV-01110A)	Q	
AK0S0413C	E-146	010A	Ch A (0B516)	Q	Ch A (HV-01120A)	Q	
AK1A0409C	E-103	001	Ch A (1A20101)	Q	Ch A (1A20101 Control)	Q	
AK1A0411C	E-103	003	Ch A (1A20109)	Q	Ch A (1A20109 Control)	Q	
AK1E11017	M1-E11-66	017	Ch A (1B216)	Q	Ch A (HV-E11-1F015A)	Q	
AK1E11017	M1-E11-66	020	Ch A (1D614)	Q	Ch A (1P202A)	Q	
AK1PM1705	M1-E11-66	016	Ch A (1D614)	Q	Ch A (1P202A)	Q	
AK1PM1705	M1-E11-66	016	Ch A (1Y216)	Q	Ch A (SV-11274A)	Q	
AK1PM1705	M1-E11-66	016	Ch A (1B237)	Q	Ch A (HV-E11-1F048A)	Q	

R1

Q Loads in Contact with PI-E21-1R600A

CABLES	DWG	SH	FROM	SEPGR(FRM)	TO	SEPGR(TO)	ISOLATED
AK1Q0801E	E-156	001	Ch A (1A20105)	Q	Ch A (1P206A Control)	Q	
AK1V1450F	E-184	005	Ch A (1D614)	Q	Ch A (1C235A)	Q	
AK1V1450G	E-184	005	Ch A (1D614)	Q	Ch A (1C235A)	Q	
AK1V1450H	E-184	005	Ch A (1D614)	Q	Ch A (1C235A)	Q	
EK0S0402P	E-146	005	Div I (1A20303)	Q	Div I (ESW RESET LOGIC)	Q	
EK0S0425D	E-146	012	Div I (1D614-02)	Q	Div I (0C653)	Q	
EK0S0606H	E-150	033	Div I (0B517)	Q	Div I (HV-01224A1)	Q	
EK0S0607H	E-150	033	Div I (0B517)	Q	Div I (HV-01224A2)	Q	
EK0S0608H	E-150	032	Div I (0B517)	Q	Div I (HV-01222A)	Q	
EK0V1194D	E-214	017	Div I (1B216)	Q	Div I (HV-08693A)	Q	R1
EK0V1450D	J-201	001	Div I (1Y216)	Q	Div I (1C606)	Q	
EK1C41001	M1-C41-36	003	Div I (1Y216-07)	Q	Div I (C41-1F004B)	Q	
EK1C41002	M1-C41-36	003	Div I (1B217061)	Q	Div I (K2B-C41)	Q	
EK1C41003	M1-C41-36	003	Div I (1Y236-021)	Q	Div I (C41-F004A)	Q	
EK1D0016E			Div I (	Q	Division I	Q	
EK1E11001	M1-E11-66	004	Div I (1D614)	Q	Div I (K7A,8A-E21A)	Q	
EK1E11002	M1-E11-66	006	Div I (1D614)	Q	Div I (K19A-E21A)	Q	
EK1E11003	M1-E11-66	006	Div I (1D614)	Q	Div I (K9A-E21A)	Q	
EK1E11004	M1-E11-66	005	Div I (1D614)	Q	Div I (NO FOUND)	Q	

Q Loads in Contact with PI-E21-1R600A

CABLES	DWG	SH	FROM	SEPGR(FRM)	TO	SEPGR(TO)	ISOLATED
EK1E11006	M1-E11-66	017	Div I (1Y216)	Q	Div I (HV-E11-1F060A, 1F122A)	Q	
EK1E11007	M1-E11-66	004	Div I (1D614)	Q	Div I (K110A-U2, 52BX-20301)	Q	
EK1E11008	M1-E11-66	004	Div I (1D614)	Q	Div I (K110A-U2)	Q	
EK1E11009	M1-E11-66	004	Div I (2D614)	Q	Div I (K110A-U1)	Q	
EK1E11010	M1-E11-66	004	Div I (2D614)	Q	Div I (K110A-U1)	Q	
EK1E11011	M1-E11-66	017	Div I (1Y216)	Q	Div I (HV-E11-1F060A, 1F122A)	Q	
EK1E11012	M1-E11-66	010	Div I (FY-15189 Isolation Device)	Q	Div I (FT-E11-1N015A)	Q	
EK1E11012	M1-E11-66	010	Div I (FT-E11-1N007A)	Q	Div I (FY-11207A)	Q	
EK1E11012	M1-E11-66	011	Div I (PT-E11-1N026A)	Q	PI-E11-1R606A1	Non Class 1E	
EK1E11013	M1-E11-66	004	Div I (1D614)	Q	Div I (PS-E11-1N021E,G)	Q	
EK1E11013	M1-E11-66	004	Div I (1D614)	Q	Div I (PS-E11-1N011A)	Q	
EK1E11013	M1-E11-66	005	Div I (1D614)	Q	Div I (52AX-20201)	Q	
EK1E11014	M1-E11-66	005	Div I (1D614)	Q	Divi I (HV-E11-1F004C,6C	Q	
EK1E11015	M1-E11-66	004	Div I (1D614)	Q	Div I (PIS-B31-1N016A)	Q	
EK1E11015	M1-E11-66	004	Div I (1D614)	Q	Div I (FS-E11-1N021A)	Q	
EK1E11015	M1-E11-66	004	Div I (1D614)	Q	Div I (52A-20102)	Q	
EK1E11015	M1-E11-66	004	Div I (1D614)	Q	Div I (Z1X-F008)	Q	
EK1E11015	M1-E11-66	005	Div I (1D614)	Q	Div I (HV-E11-1F006A)	Q	
EK1E11015	M1-E11-66	005	Div I (1D614)	Q	Div I (HV-E11-1F004A)	Q	

R1

Q Loads in Contact with PI-E21-1R600A

CABLES	DWG	SH	FROM	SEPGR(FRM)	TO	SEPGR(T0)	ISOLATED
EK1E11016	M1-E11-66	005	Div I (1D614)	Q	Divi I (52AX-20404, 09))	Q	
EK1E11016	M1-E11-66	016	Div I (1B236)	Q	Divi I (HV-E11-1F027A)	Q	
EK1E11018	M1-E11-66	019	Div I (1Y216)	Q	Divi I (HV-E51-1F050B)	Q	
EK1E11020	M1-E11-66	016	Div I (1B217)	Q	Div I (HV-E11-1F016A)	Q	
EK1E11021	M1-E11-66	007	Div I (1B216)	Q	Div I (HV-E11-1F028A)	Q	
EK1E11022	M1-E11-66	007	Div I (1B217)	Q	Divi I (HV-E11-1F021A)	Q	
EK1E11022	M1-E11-66	007	Div I (1B237)	Q	Divi I (HV-E11-1F024A)	Q	
EK1E11023	M1-E11-66	017	Div I (1Y216)	Q	Div I (HV-E11-1F050A)	Q	
EK1E21008	M1-E21-35	005	Div I (PT-E21-1N001A)	Q	Div I (PI-E21-1R60OA)	Q	R1
EK1E21008	M1-E21-35	005	Div I (FT-E21-1N003A)	Q	Div I (FI-E21-1R601A)	Q	
EK1E41001	M1-E41-69	005	Div I (1D614-07)	Q	Div I (K63 -E41)	Q	
EK1E41001	M1-E41-69	005	Div I (1D614-07)	Q	Div I (K45 -E41)	Q	
EK1E41001	M1-E41-69	005	Div I (1D614-07)	Q	Div I (K62 -E41)	Q	
EK1E41001	M1-E41-69	009	Div I (1Y216-07)	Q	Div I (HV-E41-1F100)	Q	
EK1E41001	M1-E41-69	009	Div I (1D614-07)	Q	Div I (HV-E41-1F026)	Q	
EK1E41001	M1-E41-69	009	Div I (1D614-07)	Q	Div I (HV-E41-1F028)	Q	
EK1E41002	M1-E41-69	005	Div I (1D614-07)	Q	Div I (K43 -E41)	Q	
EK1E41002	M1-E41-69	005	Div I (1D614-07)	Q	Div I (K46 -E41)	Q	
EK1E41004	M1-E41-69	008	Div I (HV-E41-1F079)	Q	Div I (42 Contactor)	Q	

Q Loads in Contact with PI-E21-1R600A

CABLES	DWG	SH	FROM	SEPGR(FRM)	TO	SEPGR(TO)	ISOLATED
EK1E51015	M1-E51-90	006	Div I (1D614-07)	Q	Div I (EGM Control)	Q	
EK1I5701E			Div I (	Q	Div I (	Q	
EK1P62212	M1-B21-131	014	Div I (1B237)	Q	Div I (HV-E11-1F032)	Q	
EK1P62213	M1-B21-131	014	Div I (1B236)	Q	Div I (HV-E11-1F040)	Q	
EK1P8F201	M1-B31-275	014	Div I (1B219)	Q	Div I (K99A, K37A-E11A)	Q	
EK1P8F201	M1-B31-275	016	Div I (1B219)	Q	Div I (K99A, K37A-E11A)	Q	
EK1P8X801	M1-B31-275	014	Div I (K39B -E11)	Q	Div I (HV-B31-1F023A)	Q	
EK1P8X801	M1-B31-275	014	Div I (K39B -E11)	Q	Div I (HV-B31-1F023A)	Q	
EK1P8X801	M1-B31-275	014	Div I (K39B -E11)	Q	Div I (HV-B31-1F031A)	Q	
EK1P8X801	M1-B31-275	014	Div I (K37A -E11)	Q	Div I (HV-B31-1F031A)	Q	
EK1PC1701	M1-C41-36	003	Div I (1B236081)	Q	Div I (K2A -C41)	Q	
EK1PC1705	M1-C41-36	003	Div I (1Y216-07)	Q	Div I (XV-C41-1F004A,B)	Q	
EK1PC1706	M1-C41-36	003	Div I (1B217-061)	Q	Div I (K2B -C41)	Q	
EK1PM1304	M1-E11-66	017	Div I (1Y216)	Q	Div I (HV-E11-1F060A, 1F122A)	Q	
EK1PM1308	M1-E11-66	019	Div I (HV-E11-1F122B)	Q	Division I	Q	
EK1PM1309	M1-E11-66	013	Div I (1Y216)	Q	Div I (RHR Sys 1 Status)	Q	
EK1PM1701	M1-E11-66	011	Div I (1D614)	Q	Div I (HV-E11-1F103A,4A)	Q	
EK1PM1701	M1-E11-66	013	Div I (1Y216)	Q	Div I (RHR SYS1 Staus)	Q	
EK1PM1701	M1-E11-66	013	Div I (1Y216)	Q	Div I (RHR SYS1 Staus)	Q	

R1

Q Loads in Contact with PI-E21-1R600A

CABLES	DWG	SH	FROM	SEPGR(FRM)	TO	SEPGR(T0)	ISOLATED
EK1PM1702	M1-E11-66	004	Div I (1D614)	Q	Div I (S32A)	Q	
EK1PM1702	M1-E11-66	005	Div I (1D614)	Q	Div I (S17A)	Q	
EK1PM1702	M1-E11-66	005	Div I (1D614)	Q	Div I (S3A)	Q	
EK1PM1703	M1-E11-66	004	Div I (1D614)	Q	Div I (S20A, S56A)	Q	
EK1PM1703	M1-E11-66	006	Div I (1D614)	Q	Div I (S1A, S56A)	Q	
EK1PM1703	M1-E11-66	017	Div I (K84)	Q	Div I (HV-E11-1F007A)	Q	
EK1PM1704	M1-E11-66	005	Div I (1D614)	Q	Div I (S3C)	Q	
EK1PM1704	M1-E11-66	017	Div I (1Y216)	Q	Div I (HV-E11-1F050A)	Q	
EK1PM1707	M1-E11-66	016	Div I (1B217)	Q	Div I (HV-E11-1F016A)	Q	
EK1PM1707	M1-E11-66	016	Div I (1B216)	Q	Div I (HV-E11-1F028A)	Q	
EK1PM1708	M1-E11-66	016	Div I (1B236)	Q	Div I (HV-E11-1F027A)	Q	
EK1PM1708	M1-E11-66	016	Div I (1B237)	Q	Div I (HV-E11-1F024A)	Q	
EK1PM1709	M1-E11-66	016	Div I (1B217)	Q	Div I (HV-E11-1F021A,)	Q	
EK1PM1709	M1-E11-66	017	Div I (1B216)	Q	Div I (HV-E11-1F017A,)	Q	
EK1PM1710	M1-E11-66	017	Div I(HV-E11-1F015A)	Q	Div I (1B219)	Q	
EK1PM1715	M1-E11-66	019	Div I (HV-E51-1F050B)	Q	Div I (1Y216)	Q	
EK1PMX801	M1-E11-66	005	Div I (1D614)	Q	Div I (K2B)	Q	
EK1PMX801	M1-E11-66	006	Div I (1D614)	Q	Div I (K35B,K36B,K47B,K91B)	Q	
EK1PMX807	M1-E11-66	005	Div I (K201B)	Q	M1-E11-66	Q	

R1

Q Loads in Contact with PI-E21-1R600A

CABLES	DWG	SH	FROM	SEPGR(FRM)	TO	SEPGR(TO)	ISOLATED
EK1PMX808	M1-E11-66	005	Div I (K200B)	Q	M1-E11-66	Q	
EK1PN1301	M1-E21-35	005	Div I (PT-E21-1N001A)	Q	PI-E21-1R600A	Non Class 1E	
EK1PN1301	M1-E21-35	005	Div I (FT-E21-1N003A)	Q	Div I (FI-E21-1R601A)	Q	
EK1PP1701	M1-E41-69	003	Div I (1Y216-07)	Q	Div I (1C601)	Q	
EK1PP1702	M1-E41-69	003	Div I (1D614-07)	Q	Div I (HV-E41-1F026)	Q	
EK1PP1702	M1-E41-69	003	Div I (1D614-07)	Q	Div I (K39 -E41)	Q	
EK1PP1702	M1-E41-69	003	Div I (1D614-07)	Q	Div I (HV-E41-1F100)	Q	
EK1PP1702	M1-E41-69	003	Div I (1D614-07)	Q	Div I (HV-E41-1F028)	Q	
EK1PP1702	M1-E41-69	003	Div I (1D614-07)	Q	Div I (HV-E41-1F028)	Q	
EK1PP1703	M1-E41-69	008	Div I (HV-E41-1F079)	Q	Div I Indicating Lights)	Q	
EK1PP1705	M1-E41-69	008	Div I (HV-E41-1F079)	Q	Div I (42 Contactor)	Q	
EK1PP1707	M1-E41-69	007	Div I (HV-E41-1F002)	Q	Div I (42 Contactor)	Q	
EK1PPX701	M1-E41-69	005	Div I (1D614-07)	Q	Div I (K44 -E41)	Q	
EK1PPXX01	M1-E41-69	009	Div I (1D614-07)	Q	Div I (HV-E41-1F028)	Q	
EK1PQ1301	M1-E51-90	005	Div I (ES-E11-1K600)	Q	Div I (Distribution Bus)	Q	
EK1PQ1301	M1-E51-90	005	Div I (ES-E11-1K600)	Q	Div I (K47)	Q	
EK1PQ2101	M1-E51-90	005	Div I (1Y216)	Q	Div I (RCIC Status)	Q	
EK1PQ2101	M1-E51-90	011	Div I (1Y216)	Q	Div I (RCIC Status)	Q	
EK1PQ2103	M1-E51-90	004	Div I (1D614)	Q	Div I (S10	Q	

R1

Q Loads in Contact with PI-E21-1R600A

CABLES	DWG	SH	FROM	SEPGR(FRM)	TO	SEPGR(TO)	ISOLATED
EK1PQ2103	M1-E51-90	008	Div I (1D254)	Q	Div I (HV-E51-1F022,45)	Q	
EK1PQ2104	M1-E51-90	008	Div I (1D254)	Q	Div I (HV-E51-1F010,45,46)	Q	
EK1PQ2105	M1-E51-90	008	Div I (1D254)	Q	Div I (HV-E51-1F010,12,19)	Q	
EK1PQ2106	M1-E51-90	008	Div I (1D254)	Q	Div I (HV-E51-1F012,13,62)	Q	
EK1PQ2107	M1-E51-90	008	Div I (1D254)	Q	Div I (HV-E51-1F008,13,19)	Q	
EK1PQ2108	M1-E51-90	003	Div I (1D614)	Q	Div I (S16)	Q	
EK1PQ2108	M1-E51-90	009	Div I (1D614)	Q	Div I (RCIC Supv Lights))	Q	
EK1PQ2108	M1-E51-90	009	Div I (1D614)	Q	Div I (HV-E51-1F004,54)	Q	
EK1PQ2109	M1-E51-90	003	Div I (1D614)	Q	Div I (S17,S23,S32,S18)	Q	
EK1PQ2109	M1-E51-90	009	Div I (1D614)	Q	Div I (HV-E51-1F025,62)	Q	R1
EK1PQ2111	M1-E51-90	011	Div I (1Y216)	Q	Div I (K15, K42 Relays)	Q	
EK1PQ2112	M1-E51-90	009	Div I (1D614)	Q	Div I (HV-E51-1F004,54)	Q	
EK1PQ2112	M1-E51-90	009	Div I (1D614)	Q	Div I (RCIC Supv Lights)	Q	
EK1PQ2114	M1-E51-90	011	Div I (1Y216)	Q	Div I (Relay K55)	Q	
EK1PQ2115	M1-E51-90	007	Div I (1D254)	Q	Div I (HV-E51-1F031)	Q	
EK1Q0108E	M1-B21-131	011	Div I (1Y216-07)	Q	Div I (HV-B31-1F013)	Q	
EK1Q0200H	E-166	001	Div I (1B236081)	Q	Div I (K7A (1C690A)	Q	
EK1Q0201G	E-166	002	Divi I (1B217061)	Q	Div I (1P208B)	Q	
EK1Q0201H	E-166	002	Div I (1B217061)	Q	Div I (K7B -1C690B)	Q	

Q Loads in Contact with PI-E21-1R600A

CABLES	DWG	SH	FROM	SEPGR(FRM)	TO	SEPGR(TO)	ISOLATED
EK1Q0611C	E-165	004	Div I (1B217)	Q	Div I (HV-G33-1F104)	Q	
EK1Q0612C	E-165	004	Div I (1B217)	Q	Div I (HV-G33-1F042)	Q	
EK1Q0627F	E-304	001	Div I (HV-16108A1)	Q	Div I (Iso Mux XIT-15701A)	Q	
EK1Q0627F	E-304	001	Div I (HV-16116A1)	Q	Div I (Iso Mux XIT-15701A)	Q	
EK1Q0627G	E-304	011	Div I (TIP Ball Valve)	Q	Div I (Iso Mux XIT-15701A)	Q	
EK1Q0807C	E-155	001	Div I (11B217)	Q	Div I (HV-E21-1F004A)	Q	
EK1Q0809C	E-155	003	Div I (11B217)	Q	Div I (HV-E21-1F005A)	Q	
EK1Q0815C	E-155	006	Div I (1Y216)	Q	Div I (HV-E21-1F006A)	Q	
EK1Q0817D	E-155	006	Div I (1Y216)	Q	Div I (HV-E21-1F007A)	Q	
EK1Q0819C	E-155	007	Div I (1Y216)	Q	Div I (HV-E21-1F037A)	Q	
EK1Q0821C	E-155	008	Div I (1D614)	Q	Div I (LIS-B21-1N031A,C)	Q	
EK1Q0821E	E-155	008	Div I (1D614)	Q	Div I (PS-E21-1N021A)	Q	
EK1Q0821F	E-155	008	Div I (1D614)	Q	Div I (1A20104)	Q	
EK1Q0825D	E-064	011	Div I (1D614-03)	Q	1C626	Q	
EK1Q0829C	E-155	009	Div I (1Y216)	Q	Div I (CS Div I Status)	Q	
EK1Q0829F	E-155	009	Div I (1Y216)	Q	Div I (CS Div I Status)	Q	
EK1Q0829K	E-155	009	Div I (1Y216)	Q	Div I (CS Div I Status)	Q	
EK1Q0829M	E-155	009	Div I (1Y216)	Q	Div I (CS Div I Status)	Q	
EK1Q0829N	E-155	009	Div I (1Y216)	Q	Div I (CS Div I Status)	Q	

R1

Q Loads in Contact with PI-E21-1R600A

CABLES	DWG	SH	FROM	SEPGR(FRM)	TO	SEPGR(TO)	ISOLATED
EK1Q0837E	E-304	007	Div I (HV-E21-1F015A)	Q	Div I (Iso Mux XIT-15701A)	Q	
EK1Q0905E	E-185	002	Div I (1Y216)	Q	Div I (1B237)	Q	
EK1Q0914D	E-185	004	Div I (1Y216)	Q	Div I (1C645)	Q	
EK1Q1334D	E-304	006	Div I (HV-E51-1F008)	Q	Div I (Iso Mux XIT-15701A)	Q	
EK1Q1334D	E-304	006	Div I (HV-E51-1F062)	Q	Div I (Iso Mux XIT-15701A)	Q	
EK1Q1503C	E-151	010	Div I (1B219)	Q	Div I (HV-B31-1F031A)	Q	
EK1Q1505C	E-151	014	Div I (1B219)	Q	Divi I (HV-B31-1F032A)	Q	
EK1Q1550D	E-304	010	Div I (HV-B21-1F022B)	Q	Div I (Iso Mux XIT-15701A)	Q	
EK1Q1550D	E-304	010	Div I (HV-B21-1F022A)	Q	Div I (Iso Mux XIT-15701A)	Q	R1
EK1Q1550E	E-304	010	Div I (HV-B21-1F001)	Q	Div I (Iso Mux XIT-15701A)	Q	
EK1Q1550E	E-304	010	Div I (HV-B21-1F016)	Q	Div I (Iso Mux XIT-15701A)	Q	
EK1Q1550F	E-304	010	Div I (HV-B21-1F022C)	Q	Div I (Iso Mux XIT-15701A)	Q	
EK1Q1550F	E-304	010	Div I (HV-B21-1F022D)	Q	Div I (Iso Mux XIT-15701A)	Q	
EK1Q1550G	E-304	009	Div I (HV-B31-1F019)	Q	Div I (Iso Mux XIT-15701A)	Q	
EK1Q1550G	E-304	009	Div I (HV-E11-1F009)	Q	Div I (Iso Mux XIT-15701A)	Q	
EK1Q1550G	E-304	009	Div I (HV-E11-1F040)	Q	Div I (Iso Mux XIT-15701A)	Q	
EK1Q1550H	E-304	009	Div I (SV-E11-1F079A)	Q	Div I (Iso Mux XIT-15701A)	Q	
EK1Q1550H	E-304	009	Div I (SV-E11-1F079B)	Q	Div I (Iso Mux XIT-15701A)	Q	
EK1Q1550H	E-304	009	Div I (HV-B21-1F019)	Q	Div I (Iso Mux XIT-15701A)	Q	

Q Loads in Contact with PI-E21-1R600A

CABLES	DWG	SH	FROM	SEPGR(FRM)	TO	SEPGR(TO)	ISOLATED
EK1Q1612C	E-181	003	Div I (1B217)	Q	Divi I (HV-B21-1F032A)	Q	
EK1Q1614C	E-181	005	Div I (1B217)	Q	Div I (HV-B21-1F020)	Q	
EK1Q3020E	E-153	041	Div I (1B216)	Q	Div I (HV-E11-1F010A)	Q	
EK1Q3022G	E-153	020	Div I (1B216)	Q	Div I (HV-E11-F006A)	Q	
EK1Q3023G	E-153	020	Div I (1B237)	Q	Div I (HV-E11-1F006B)	Q	
EK1Q3032C	E-153	025	Div I (1B219)	Q	Div I (HV-E11-1F015A)	Q	
EK1Q3033C	E-153	026	Div I (1B219)	Q	Div I (HV-E11-1F007A)	Q	
EK1Q3058U	E-153	033	Div I (1A20104)	Q	Div I (1C617)	Q	
EK1Q3060F	E-153	033	Div I (1D614)	Q	Div I (HV-E11-1F103A)	Q	
EK1Q3060G	E-153	033	Div I (1D614)	Q	Div I (HV-E11-1F104A)	Q	R1
EK1Q3064C	E-153	034	Div I (1Y216-02)	Q	Div I (RHR Div I Status)	Q	
EK1Q3064E	E-153	034	Div I (1Y216-02)	Q	Div I (RHR Div I Status)	Q	
EK1Q3064F	E-153	034	Div I (1Y216-02)	Q	Div I (RHR Div I Status)	Q	
EK1Q3064M	E-153	034	Div I (1Y216-02)	Q	Div I (RHR Div I Status)	Q	
EK1Q3064N	E-153	034	Div I (1Y216-02)	Q	Div I (RHR Div I Status)	Q	
EK1Q3077E	E-153	113	Div I (1B217)	Q	Div I (HV-15112)	Q	
EK1Q4019G	E-152	001	Div I (1D614-07)	Q	Div I (HV-E41-1F028)	Q	
EK1Q4019H	E-152	001	Div I (1D614-07)	Q	Div.I (HV-E41-1F026)	Q	
EK1Q4033C	E-152	018	Div I (1B237)	Q	Div I (1D254)	Q	

Q Loads in Contact with PI-E21-1R600A

CABLES	DWG	SH	FROM	SEPGR(FRM)	TO	SEPGR(TO)	ISOLATED
EK1Q4033E	E-152	018	Div I (1B237)	Q	Div I (1D254)	Q	
EK1Q4036D	E-304	007	Div I (HV-E41-1F100)	Q	Div I (Iso Mux XIT-15701A)	Q	
EK1Q4036D	E-304	007	Div I (HV-E41-1F079)	Q	Div I (Iso Mux XIT-15701A)	Q	
EK1Q4036E	E-304	007	Div I (HV-E11-1F021A)	Q	Div I (Iso Mux XIT-15701A)	Q	
EK1Q4036E	E-304	007	Div I (HV-E41-1F002)	Q	Div I (Iso Mux XIT-15701A)	Q	
EK1Q4037A	E-304	003	Div I (HV-E11-1F024A)	Q	Div I (Iso Mux XIT-15701A)	Q	
EK1Q4037A	E-304	003	Div I (HV-E11-1F027A)	Q	Div I (Iso Mux XIT-15701A)	Q	
EK1Q4037A	E-304	003	Div I (HV-E11-1F016A)	Q	Div I (Iso Mux XIT-15701A)	Q	
EK1Q4037A	E-304	003	Div I (HV-E11-1F028A)	Q	Div I (Iso Mux XIT-15701A)	Q	R1
EK1Q4037D	E-304	007	Div I (HV-E11-1F022)	Q	Div I (Iso Mux XIT-15701A)	Q	
EK1Q4037E	E-304	007	Div I (HV-E11-1F008)	Q	Div I (Iso Mux XIT-15701A)	Q	
EK1Q4037F	E-304	012	Div I (HV-11314)	Q	Div I (Iso Mux XIT-15701A)	Q	
EK1Q4037G	E-304	014	Div I (SV-12671)	Q	Div I (Iso Mux XIT-15701A)	Q	
EK1Q4037G	E-304	014	Div I (SV-12661)	Q	Div I (Iso Mux XIT-15701A)	Q	
EK1Q4037H	E-304	014	Div I (SV-12651)	Q	Div I (Iso Mux XIT-15701A)	Q	
EK1Q4037J	E-304	009	Div I (HV-E11-1F015A)	Q	Div I (Iso Mux XIT-15701A)	Q	
EK1Q4037K	E-304	009	Div I (HV-15766)	Q	Div I (Iso Mux XIT-15701A)	Q	
EK1Q4037K	E-304	009	Div I (HV-12603)	Q	Div I (Iso Mux XIT-15701A)	Q	
EK1Q4037R	E-304	012	Div I (HV-11313)	Q	Div I (Iso Mux XIT-15701A)	Q	

Q Loads in Contact with PI-E21-1R600A

CABLES	DWG	SH	FROM	SEPGR(FRM)	TO	SEPGR(TO)	ISOLATED
EK1Q4102X	E-178	003	Div I (1Y216)	Q	Div I (Excess Flow Ck Valve)	Q	
EK1Q4102Y	E-178	003	Div I (1Y216)	Q	Div I (Excess Flow Ck Valve)	Q	
EK1Q4103A	E-178	004	Div I (1Y216)	Q	Div I (Excess Flow Ck Valve)	Q	
EK1Q4103E	E-178	004	Div I (1Y216)	Q	Div I (Excess Flow Ck Valve)	Q	
EK1Q4103F	E-178	004	Div I (1Y216)	Q	Div I (Excess Flow Ck Valve)	Q	
EK1Q4103G	E-178	004	Div I (1Y216)	Q	Div I (Excess Flow Ck Valve)	Q	
EK1Q4123H	E-172	005	Div I (1Y236)	Q	Divi I (SV-12651)	Q	
EK1Q4129C	E-172	002	Div I (1B236)	Q	Div I (HV-12603)	Q	
EK1Q4129Q	E-172	002	Div I (1B236)	Q	Div I (HV-12603)	Q	
EK1Q4153A	E-171	008	Division I	Q	Division I	Q	R1
EK1Q4159D	E-171	008	Div I (1Y216)	Q	Div I (HV-15713)	Q	
EK1Q4160F	E-171	008	Div I (1Y216)	Q	Div I (HV-15703)	Q	
EK1Q4189D	E-304	013	Div I (HV-15713)	Q	Div I (Iso Mux XIT-15701A)	Q	
EK1Q4189D	E-304	013	Div I (HV-15703)	Q	Div I (Iso Mux XIT-15701A)	Q	
EK1Q4189G	E-304	013	Div I (HV-15722)	Q	Div I (Iso Mux XIT-15701A)	Q	
EK1Q4189G	E-304	013	Div I (HV-15725)	Q	Div I (Iso Mux XIT-15701A)	Q	
EK1Q4189H	E-304	013	Div I (SV-15737)	Q	Div I (Iso Mux XIT-15701A)	Q	
EK1Q4189H	E-304	013	Div I (SV-15767)	Q	Div I (Iso Mux XIT-15701A)	Q	
EK1Q4189J	E-304	013	Div I (SV-15737)	Q	Div I (Iso Mux XIT-15701A)	Q	

Q Loads in Contact with PI-E21-1R600A

CABLES	DWG	SH	FROM	SEPGR(FRM)	TO	SEPGR(T0)	ISOLATED
EK1Q4189J	E-304	013	Div I (SV-15742A)	Q	Div I (Iso Mux XIT-15701A)	Q	
EK1Q4189J	E-304	013	Div I (SV-15740A)	Q	Div I (Iso Mux XIT-15701A)	Q	
EK1Q4201C	E-180	001	Div I (1D614)	Q	Div I (PSV-B21-1F013A)	Q	
EK1Q4202C	E-180	001	Div I (1D614)	Q	Div I (PSV-B21-1F013B)	Q	
EK1Q4203C	E-180	001	Div I (1D614)	Q	Div I (PSV-B21-1F013C)	Q	
EK1Q4204C	E-180	002	Div I (1D614)	Q	Divi I (Safety Relief Valve)	Q	
EK1Q4204D	E-180	002	Div I (1D614)	Q	Divi I (Safety Relief Valve)	Q	
EK1Q4205C	E-180	002	Div I (1D614)	Q	Divi I (Safety Relief Valve)	Q	
EK1Q4205D	E-180	002	Div I (1D614)	Q	Divi I (Safety Relief Valve)	Q	
EK1Q4206C	E-180	002	Div I (1D614)	Q	Divi I (Safety Relief Valve)	Q	
EK1Q4206D	E-180	002	Div I (1D614)	Q	Divi I (Safety Relief Valve)	Q	
EK1Q4207C	E-180	002	Div I (1D614)	Q	Divi I (Safety Relief Valve)	Q	
EK1Q4207D	E-180	002	Div I (1D614)	Q	Divi I (Safety Relief Valve)	Q	
EK1Q4208C	E-180	002	Div I (1D614)	Q	Divi I (Safety Relief Valve)	Q	
EK1Q4208D	E-180	002	Div I (1D614)	Q	Divi I (Safety Relief Valve)	Q	
EK1Q4209C	E-180	002	Div I (1D614)	Q	Divi I (Safety Relief Valve)	Q	
EK1Q4209D	E-180	002	Div I (1D614)	Q	Divi I (Safety Relief Valve)	Q	
EK1Q4210C	E-180	002	Div I (1D614)	Q	Divi I (Safety Relief Valve)	Q	
EK1Q4210D	E-180	002	Div I (1D614)	Q	Divi I (Safety Relief Valve)	Q	

R1

Q Loads in Contact with PI-E21-1R600A

CABLES	DWG	SH	FROM	SEPGR(FRM)	TO	SEPGR(TO)	ISOLATED
EK1Q4211C	E-180	002	Div I (1D614)	Q	Divi I (Safety Relief Valve)	Q	
EK1Q4211D	E-180	002	Div I (1D614)	Q	Divi I (Safety Relief Valve)	Q	
EK1Q4212C	E-180	002	Div I (1D614)	Q	Divi I (Safety Relief Valve)	Q	
EK1Q4212D	E-180	002	Div I (1D614)	Q	Divi I (Safety Relief Valve)	Q	
EK1Q4213C	E-180	002	Div I (1D614)	Q	Divi I (Safety Relief Valve)	Q	
EK1Q4213D	E-180	002	Div I (1D614)	Q	Divi I (Safety Relief Valve)	Q	
EK1Q4214C	E-180	002	Div I (1D614)	Q	Divi I (Safety Relief Valve)	Q	
EK1Q4214D	E-180	002	Div I (1D614)	Q	Divi I (Safety Relief Valve)	Q	
EK1Q4215C	E-180	002	Div I (1D614)	Q	Divi I (Safety Relief Valve)	Q	R1
EK1Q4215D	E-180	002	Div I (1D614)	Q	Divi I (Safety Relief Valve)	Q	
EK1Q4216C	E-180	002	Div I (1D614)	Q	Divi I (Safety Relief Valve)	Q	
EK1Q4216D	E-180	002	Div I (1D614)	Q	Divi I (Safety Relief Valve)	Q	
EK1Q4217C	E-180	002	Div I (1D614)	Q	Divi I (ADS Valve)	Q	
EK1Q4218C	E-180	002	Div I (1D614)	Q	Divi I (ADS Valve)	Q	
EK1Q4219C	E-180	002	Div I (1D614)	Q	Divi I (ADS Valve)	Q	
EK1Q4220C	E-180	002	Div I (1D614)	Q	Divi I (ADS Valve)	Q	
EK1Q4221C	E-180	002	Div I (1D614)	Q	Divi I (ADS Valve)	Q	
EK1Q4222C	E-180	002	Div I (1D614)	Q	Divi I (ADS Valve)	Q	
EK1Q4230C	E-180	003	Div I (1D614)	Q	Div (LIS-B21-1N031C)	Q	

Q Loads in Contact with PI-E21-1R600A

CABLES	DWG	SH	FROM	SEPGR(FRM)	TO	SEPGR(T0)	ISOLATED
EK1Q4230D	E-180	003	Div I (1D614)	Q	Div (LIS-B21-1N042A)	Q	
EK1Q4233W	E-180	007	Div I (1Y216)	Q	Div I (VISH-14180A)	Q	
EK1Q4233X	E-180	007	Div I (1Y216)	Q	Div I (VISH-14180A)	Q	
EK1Q4235E	E-304	016	Div I (AR-15745A)	Q	Div I (Iso Mux XIT-15701A)	Q	
EK1Q4245A	E-180	007	Div I (1C601)	Q	Div I (VISH-14180A)	Q	
EK1Q4310A	E-171	023	Div I (1D614)	Q	Div I (1C602A)	Q	
EK1Q4310B	E-171	023	Div I (1D614)	Q	Div I (1C602A)	Q	
EK1Q4310C	E-171	023	Div I (1D614)	Q	Div I (1C602A)	Q	
EK1Q4310D	E-171	023	Div I (1D614)	Q	Div I (1C602A)	Q	
EK1Q4310J	E-171	023	Div I (1D614)	Q	Div I (1C602A)	Q	R1
EK1Q4312A	E-171	025	Div I (1D614)	Q	Div I (1C602A)	Q	
EK1Q4312B	E-171	025	Div I (1D614)	Q	Div I (1C602A)	Q	
EK1Q4312C	E-171	025	Div I (1D614)	Q	Div I (1C602A)	Q	
EK1Q4312D	E-171	025	Div I (1D614)	Q	Div I (1C602A)	Q	
EK1Q4314A	E-171	027	Div I (1D614)	Q	Div I (1C602A)	Q	
EK1Q4314B	E-171	027	Div I (1D614)	Q	Div I (1C602A)	Q	
EK1Q4314C	E-171	027	Div I (1D614)	Q	Div I (1C602A)	Q	
EK1Q4314D	E-171	027	Div I (1D614)	Q	Div I (1C602A)	Q	
EK1Q6513D	E-189	001	Div I (1B217)	Q	Div I (HV-E32-1F006)	Q	

Q Loads in Contact with PI-E21-1R600A

CABLES	DWG	SH	FROM	SEPGR(FRM)	TO	SEPGR(TO)	ISOLATED
EK1Q6513E	E-189	001	Div I (1B217)	Q	Div I (HV-E32-1F006)	Q	
EK1Q6514D	E-189	001	Div I (1B217)	Q	Div I (HV-E32-1F007)	Q	
EK1Q6514E	E-189	001	Div I (1B217)	Q	Div I (HV-E32-1F007)	Q	
EK1Q6515D	E-189	001	Div I (1B217)	Q	Div I (HV-E32-1F008)	Q	
EK1Q6515E	E-189	001	Div I (1B217)	Q	Div I (HV-E32-1F008)	Q	
EK1Q6516D	E-189	001	Div I (1B217)	Q	Div I (HV-E32-1F009)	Q	
EK1Q6516E	E-189	001	Div I (1B217)	Q	Div I (HV-E32-1F009)	Q	
EK1Q6518D	E-189	003	Div I (1B217)	Q	Div I (1K209A)	Q	
EK1Q6526A	E-064	015	Div I (1Y216-06)	Q	1C645	Q	
EK1Q6529C	E-189	005	Div I (1C645)	Q	Div I (HV-E32-1F006)	Q	
EK1Q6529D	E-189	005	Div I (1C645)	Q	Div I (HV-E32-1F007)	Q	
EK1Q6529E	E-189	005	Div I (1C645)	Q	Div I (HV-E32-1F008)	Q	
EK1Q6529F	E-189	005	Div I (1C645)	Q	Div I (HV-E32-1F009)	Q	
EK1V2618D	E-304	004	Div I (HV-18722A2)	Q	Div I (Iso Mux XIT-15701A)	Q	
EK1V2618D	E-304	004	Div I (HV-18782A1)	Q	Div I (Iso Mux XIT-15701A)	Q	
EK1V2618D	E-304	004	Div I (HV-18792B2)	Q	Div I (Iso Mux XIT-15701A)	Q	
EK1V2618D	E-304	004	Div I (HV-18792A1)	Q	Div I (Iso Mux XIT-15701A)	Q	
EK1V2618D	E-304	004	Div I (HV-18782B1)	Q	Div I (Iso Mux XIT-15701A)	Q	
EK1V2618D	E-304	004	Div I (HV-18782B2)	Q	Div I (Iso Mux XIT-15701A)	Q	

R1

CABLES	DWG	SH	FROM	SEPGR(FRM)	TO	SEPGR(TO)	ISOLATED
EK1V2618D	E-304	004	Div I (HV-18792B1)	Q	Div I (Iso Mux XIT-15701A)	Q	
EK1V2618D	E-304	004	Div I (HV-18782A2)	Q	Div I (Iso Mux XIT-15701A)	Q	
EK1V2618E	E-304	002	Div I (HV-18781A2)	Q	Div I (Iso Mux XIT-15701A)	Q	
EK1V2618E	E-304	002	Div I (HV-18781A1)	Q	Div I (Iso Mux XIT-15701A)	Q	
EK1V2618F	E-304	002	Div I (HV-18791A2)	Q	Div I (Iso Mux XIT-15701A)	Q	
EK1V2618F	E-304	002	Div I (HV-18791A1)	Q	Div I (Iso Mux XIT-15701A)	Q	
EK1Y0009T	E-064	015	Div I (1Y216-33)	Q	Div I (HSE-111501)	Q	
EK1Y0010U	E-064	015	Div I (1Y216-30)	Q	Div I (1C602A)	Q	
EK1Y0013D	E-064	016	Div I (1Y236-05)	Q	PI-01107A	Q	R1
EK1Y0013J	E-064	016	Div I (1Y236-17)	Q	Div I (1C694)	Q	
EK1Y0013L	E-064	016	Div I (1Y236-21)	Q	Div I (XV-C41-1F004A)	Q	
EK1Y0014A	E-064	016	Div I (1Y236-02)	Q	Div I (1C601)	Q	
EK1Y0030B	E-064	037	Div I (1Y115)	Q	Divi I (1C601)	Q	
EM1E51014	M1-E51-90	006	Div I (PT-E51-1N004,5,7,8)	Q	PI-E51-1R601,2,3,4	Non Class 1E	
EM1E51014	M1-E51-90	006	Div I (FT-E51-1N003)	Q	Div I (FY-E51-1K601)	Q	
EM1I4202K	J-442	001	Div I (LT-14201A,2A,3A)	Q	Div I (Iso Mux XIT-15701B)	Q	
EM1PM1302	M1-E11-66	010	Div I (PT-E11-1N026A)	Q	PI-E11-1R606A1	Non Class 1E	
EM1PM1302	M1-E11-66	010	Div I (FY-E11-1K600A)	Q	Div I (FI-E11-1R603A)	Q	
EM1PQ1302	M1-E51-90	006	Div I (FY-14989 Isolation Device))	Q	Div I (FY-E51-1K601)	Q	

Q Loads in Contact with PI-E21-1R600A

CABLES	DWG	SH	FROM	SEPGR(FRM)	TO	SEPGR(TO)	ISOLATED
EM1PQ1302	M1-E51-90	006	Div I (PT-E51-1N004,5,7,8)	Q	PI-E51-1R601,2,3,4	Non Class 1E	
EM1Q0836D	E-304	018	Div I (FT-E21-1N003A)	Q	Div I (Iso Mux XIT-15701A)	Q	
EM1Q0836D	E-304	018	Div I (PT-E21-1N001A)	Q	Div I (Iso Mux XIT-15701A)	Q	
EM1Q0836F	E-304	019	LITS-B21-1N026B (Mech Sw See Ap	Q	Div I (Iso Mux XIT-15701A)	Q	
EM1Q4189A	E-304	018	Div I (PT-15729A)	Q	Div I (Iso Mux XIT-15701A)	Q	
EM1Q4189K	E-304	017	Div I (TT-15799A)	Q	Div I (Iso Mux XIT-15701A)	Q	
EM1Q4189K	E-304	017	Div I (TT-15790A)	Q	Div I (Iso Mux XIT-15701A)	Q	
EM1Q4189L	E-304	017	Div I (PT-15710A)	Q	Div I (Iso Mux XIT-15701A)	Q	
EM1Q4189L	E-304	017	Div I (PT-15709A)	Q	Div I (Iso Mux XIT-15701A)	Q	
EM1Q4189M	E-304	017	Div I (LT-15776A)	Q	Div I (Iso Mux XIT-15701A)	Q	
EM1Q4189M	E-304	017	Div I (LT-15775A)	Q	Div I (Iso Mux XIT-15701A)	Q	
EM1Q4235E	E-304	016	Div I (AR-15745A)	Q	Div I (Iso Mux XIT-15701A)	Q	
EM1Q4235E	E-304	016	Div I (AR-15746A)	Q	Div I (Iso Mux XIT-15701A)	Q	
EM1Q4235F	E-304	016	Div I (TX-15751)	Q	Div I (Iso Mux XIT-15701A)	Q	
EM1Q4237D	E-304	019	Div I (RY-15721A)	Q	Div I (Iso Mux XIT-15701A)	Q	
JK0G2401N	E-023	006	Ch A Aff (120 V Potential Transform	Q	Sync Ckt	Non Class 1E	YES
NM1PR4101	M1-G33-153	004	FT-G33-1N037 (Press Boundary)	Q	FI-G33-1R610	Non Class 1E	
PK1Q0300C	E-169	001	Divi I Aff (1A20107)	Q	Computer Input	Non Class 1E	
PK1Q0839G	E-064	032	Div I Affiliated (1Y688)	Q	1C699A	Non Class 1E	YES

R1

Q Loads in Contact with PI-E21-1R600A

CABLES	DWG	SH	FROM	SEPGR(FRM)	TO	SEPGR(T0)	ISOLATED
PK1Q1507C	E-151	009	Div I Aff (1B237)	Q	HV-B31-1F023A	Non Class 1E	YES
PK1Q7001P	E-185	014	Division I Affiliated	Q	BIS	Q	YES
PK1S0704C	E-147	003	Division I Affiliated	Q	1P210B	Non Class 1E	YES
PK1S0705C	E-147		Division I Affiliated	Q	1P210A	Non Class 1E	YES
PK2Q70011	E-185	028	Division I Affiliated	Q	BIS	Q	YES
PK2Q7001U	E-185	028	Division I Affiliated	Q	BIS	Q	YES

Q Loads in Contact with PI-E21-1R600B

CABLES	DWG	SH	FROM	SEPGR(FRM)	TO	SEPGR(T0)	ISOLATED
BK1E11004	M1-E11-66	006	Ch B (1D624)	Q	Ch B (K10A)	Q	
BK1E11004	M1-E11-66	015	Ch B (1D624)	Q	Ch B (74 Relays from valves))	Q	
BK1E36003	E-184	004	Ch B (1D624)	Q	Ch B (K11B)	Q	
BK1PN2703	M1-E21--35	006	Ch B (1B227)	Q	Ch B (HV-E21-1F004B)	Q	
BK1PN2703	M1-E21--35	006	Ch B (1D624)	Q	Ch B (1P206B)	Q	
FK1E11002	M1-E11-66	007	Div II (1D624)	Q	Div II (K7B,8B Relays)	Q	
FK1E11003	M1-E11-66	007	Div II (1D624)	Q	Div II (Z12X-1F009)	Q	
FK1E11003	M1-E11-66	007	Div II (1D624)	Q	Div II (52a-20202)	Q	
FK1E11003	M1-E11-66	007	Div II (1D624)	Q	Div II (HV-E11-1F008)	Q	R1
FK1E11003	M1-E11-66	007	Div II (1D624)	Q	Div II (PIS-B31-1N018B)	Q	
FK1E11003	M1-E11-66	007	Div II (1D624)	Q	Div II (FS-E11-1N021B)	Q	
FK1E11003	M1-E11-66	008	Div II (1D624)	Q	Div II (HV-E11-1F006B)	Q	
FK1E11005	M1-E11-66	018	Div II (1B246)	Q	Div II (HV-E11-1F048B)	Q	
FK1E11006	M1-E11-66	018	Div II (1B226)	Q	Div II (HV-E11-1F016B)	Q	
FK1E11006	M1-E11-66	019	Div II (1B229)	Q	Div II (HV-E11-1F015B)	Q	
FK1E11007	M1-E11-66	018	Div II (1B246)	Q	Div II (HV-E11-1F027B)	Q	
FK1E11007	M1-E11-66	019	Div II (1B226)	Q	Div II (HV-E11-1F028B)	Q	
FK1E11008	M1-E11-66	018	Div II (1B227)	Q	Div II (HV-E11-1F024B)	Q	
FK1E11008	M1-E11-66	018	Div II (1B227)	Q	Div II (HV-E11-1F021B)	Q	

Q Loads in Contact with PI-E21-1R600B

CABLES	DWG	SH	FROM	SEPGR(FRM)	TO	SEPGR(TO)	ISOLATED
FK1E11017	M1-E11-66	011	Div II (PT-E11-1N026B)	Q	PI-E11-1R606B1	Non Class 1E	
FK1E11018	M1-E11-66	019	Div II (1Y226)	Q	Divi II (HV-E11-1F060B)	Q	
FK1E41003	M1-E41-69	005	Div II (1D624)	Q	Div II (LIS-B21-1N031B)	Q	
FK1E41003	M1-E41-69	007	Div II (1D264)	Q	Div II (HV-E41-1F003)	Q	
FK1E41004	M1-E41-69	008	Div II (1D264)	Q	Div II (HV-E41-1F006)	Q	
FK1E41004	M1-E41-69	009	Div II (1D624)	Q	Div II (LSH-E41-1N014, S14)	Q	
FK1P81805	M1-E51-90	009	Div II (1D624)	Q	Div II (HV-E51-1F0005,26,88)	Q	
FK1P81807	M1-E51-90	011	Div II (K55 Relay)	Q	Div II (RCIC Status)	Q	
FK1PM1201	M1-E11-66	014	Div II (1Y226)	Q	FR-E11-1R608	Non Class 1E	
FK1PM1203	M1-E11-66	014	Div II (1Y226)	Q	Div II (RHR Sys 2 Status)	Q	
FK1PM1206	M1-E11-66	019	Div II (1Y226)	Q	Div II (HV-E11-1F060B)	Q	R1
FK1PM1801	M1-E11-66	019	Div II (1B229)	Q	Div II (HV-E11-1F015B)	Q	
FK1PM1803	M1-E11-66	007	Div II (1D246)	Q	Div II (S32B)	Q	
FK1PM1803	M1-E11-66	008	Div II (1D246)	Q	Div II (S17B, S3B)	Q	
FK1PM1804	M1-E11-66	007	Div II (1D624)	Q	Div II (S20B, S56B)	Q	
FK1PM1804	M1-E11-66	008	Div II (1D624)	Q	Div II (S3B)	Q	
FK1PM1804	M1-E11-66	009	Div II (1D624)	Q	Div II (S1B, S56B)	Q	
FK1PM1809	M1-E11-66	018	Div II (1B246)	Q	Div II (HV-E11-1F027B)	Q	
FK1PM1809	M1-E11-66	018	Div II (1B247)	Q	Div II (HV-E11-1F024B)	Q	

Q Loads in Contact with PI-E21-1R600B

CABLES	DWG	SH	FROM	SEPGR(FRM)	TO	SEPGR(T0)	ISOLATED
FK1PM1810	M1-E11-66	018	Div II (1B227)	Q	Div II (HV-E11-1F021B)	Q	
FK1PM1810	M1-E11-66	019	Div II (1B226)	Q	Div II (HV-E11-1F017B)	Q	
FK1PM1813	M1-E11-66	018	Div II (1B227')	Q	Div II (HV-E11-1F021B)	Q	
FK1PMX804	M1-E11-66	008	Div II (1D624)	Q	Div II (K9A)	Q	
FK1PMX804	M1-E11-66	019	Div II (1B229)	Q	Div II (K67A)	Q	
FK1PMX806	M1-E11-66	008	Div II (1D624)	Q	Div II (K200A)	Q	
FK1PN2701	M1-E21-35	008	Div II (1Y226)	Q	Div II (CS Sys 2 Status)	Q	
FK1PN2702	M1-E21-35	006	Div II (1B247)	Q	Div II (HV-E21-1F015B)	Q	
FK1PN2702	M1-E21-35	006	Div II (1B227)	Q	Div II (HV-E21-1F004B)	Q	R1
FK1PN2704	M1-E21-35	004	Div II (1D624)	Q	Div II (S1B,5B,16B,17B)	Q	
FK1PN2704	M1-E21-35	006	Div II (1B227)	Q	Div II (HV-E21-1F005B)	Q	
FK1PN2705	M1-E21-35	006	Div II (1B227)	Q	Div II (HV-E21-1F005B)	Q	
FK1PN2705	M1-E21-35	006	Div II (1Y226)	Q	Div II (HV-E21-1F006B,7B)	Q	
FK1PN2706	M1-E21-35	006	Div II (1Y226)	Q	Div II)HV-E21-1F037B)	Q	
FK1PNT702	M1-E21-35	004	Div II (1D624)	Q	Div II (K32A)	Q	
FK1PP1201	M1-E41-69	003	Div II (ES-E41-1K600)	Q	Div II (K50, FC-E41-1R600)	Q	
FK1PP1202	M1-E41-69	011	Div II (K50)	Q	Div II (HPCI Status)	Q	
FK1PP1204	M1-E41-69	011	Div II (K 50)	Q	Div II (S2)	Q	
FK1PP2001	M1-E41-69	003	Div II (K35, K1)	Q	Div II (HPCI Status)	Q	

Q Loads in Contact with PI-E21-1R600B

CABLES	DWG	SH	FROM	SEPGR(FRM)	TO	SEPGR(TO)	ISOLATED
FK1PP2001	M1-E41-69	003	Div II (1Y226)	Q	Div II (HPCI Status)	Q	
FK1PP2002	M1-E41-69	004	Div II (1D624)	Q	Div II (S25)	Q	
FK1PP2002	M1-E41-69	008	Div II (1D264)	Q	Div II (HV-E11-1F011)	Q	
FK1PP2003	M1-E41-69	008	Div II (1D264)	Q	Div II (HV-E41-1F059)	Q	
FK1PP2003	M1-E41-69	008	Div II (1D274)	Q	Div II (HV-E41-1F006)	Q	
FK1PP2004	M1-E41-69	008	Div II (1D274)	Q	Div II (HV-E41-1F075)	Q	
FK1PP2004	M1-E41-69	008	Div II (1D264)	Q	Div II (HV-E41-1F042)	Q	
FK1PP2004	M1-E41-69	009	Div II (1D624)	Q	Div II (HV-E41-1F054)	Q	
FK1PP2005	M1-E41-69	007	Div II (1D274)	Q	Div II (HV-E41-1F008)	Q	
FK1PP2005	M1-E41-69	008	Div II (1D264)	Q	Div II (HV-E41-1F004)	Q	R1
FK1PP2005	M1-E41-69	009	Div II (1D624)	Q	Div II (HV-E41-1F054)	Q	
FK1PP2006	M1-E41-69	007	Div II (1D274)	Q	Div II (HV-E41-1F007)	Q	
FK1PP2006	M1-E41-69	007	Div II (1D624)	Q	Div II (HV-E41-1F025)	Q	
FK1PP2006	M1-E41-69	007	Div II (1D264)	Q	Div II (HV-E41-1F012)	Q	
FK1PP2007	M1-E41-69	007	Div II (1D264)	Q	Div II (HV-E41-1F001,3)	Q	
FK1PP2007	M1-E41-69	009	Div II (1D624)	Q	Div II (HV-E41-1F029)	Q	
FK1PP2008	M1-E41-69	004	Div II (1D624)	Q	Div II (S20, S19)	Q	
FK1PP2008	M1-E41-69	005	Div II (1D624)	Q	Div II (S18)	Q	
FK1PP2008	M1-E41-69	009	Div II (1D624)	Q	Div II (HPCI Tur Stop Valve))	Q	

Q Loads in Contact with PI-E21-1R600B

CABLES	DWG	SH	FROM	SEPGR(FRM)	TO	SEPGR(TO)	ISOLATED
FK1PP2008	M1-E41-69	009	Div II (1D624)	Q	Div II (HV-E41-1F029)	Q	
FK1PP2009	M1-E41-69	004	Div II (1D624)	Q	Div II (S32, 33)	Q	
FK1PP2009	M1-E41-69	007	Div II (1D274)	Q	Div II (1P213)	Q	
FK1PP2009	M1-E41-69	007	Div II (1D274)	Q	Div II (1P215,6)	Q	
FK1PP2011	M1-E41-69	007	Div II (1D264)	Q	Div II (HV-E41-1F003)	Q	
FK1PP2011	M1-E41-69	008	Div II (1D264)	Q	Div II (HV-E41-1F075)	Q	
FK1PP2012	M1-E41-69	008	Div II (1D264)	Q	Div II (HV-E41-1F004,6)	Q	
FK1PP2013	M1-E41-69	007	Div II (1D264)	Q	Div II (HV-E41-1F012)	Q	
FK1PP2X01	M1-E41-69	005	Div II (1D624)	Q	Div II (S4B)	Q	
FK1PPXX03	M1-E41-69	004	Div II (1D624)	Q	Div II (K44, K45)	Q	
FK1PQ1802	M1-E51-90	005	Div II (1Y226)	Q	Div II (RCIC Status)	Q	
FK1PQ1802	M1-E51-90	011	Div II (K33, K43 Relays)	Q	Div II (RCIC Status)	Q	
FK1PQ1803	M1-E51-90	008	Div II (1D264)	Q	Div II (HV-E51-1F084)	Q	
FK1PQ1804	M1-E51-90	004	Div II (1D624)	Q	Div II (S26)	Q	
FK1PQ1804	M1-E51-90	009	Div II (1D624)	Q	Div II (HV-E51-1F0005,26,88)	Q	
FK1PQ1804	M1-E51-90	009	Div II (1D624)	Q	Div II (S11B, S12B)	Q	
FK1PQD103	M1-E51-90	004	Div II (1D624)	Q	Div II (K40 Relay)	Q	
FK1PQX801	M1-E51-90	004	Div II (1D624)	Q	Div II (S3B-B21B)	Q	
FM1E11002	M1-E11-66	009	Div II (1D624)	Q	Div II (K19B-E21A)	Q	

R1

Q Loads in Contact with PI-E21-1R600B

CABLES	DWG	SH	FROM	SEPGR(FRM)	TO	SEPGR(TO)	ISOLATED
FM1E11003	M1-E11-66	010	Div II (FT-E11-1N015B)	Q	Div II (FY-E11-1K600B)	Q	
FM1E11003	M1-E11-66	010	Div II (FT-E11-1N007B)	Q	Div II (FY-11207B2)	Q	
FM1E11004	M1-E11-66	007	Div II (1D624)	Q	Div II (PS-E11-1N011B)	Q	
FM1E11004	M1-E11-66	007	Div II (1D624)	Q	Div II (K110A-U2)	Q	
FM1E11004	M1-E11-66	007	Div II (1D624)	Q	Div II (LIS-B21-1N013D)	Q	
FM1E11004	M1-E11-66	008	Div II (1D624)	Q	Div II (52AX-20101)	Q	
FM1E11004	M1-E11-66	009	Div II (1D624)	Q	Div II (PIS-B21-1N021B,D)	Q	
FM1E11005	M1-E11-66	008	Div II (1D624)	Q	Div II (HV-E11-1F006D, 4D))	Q	R1
FM1E11006	M1-E11-66	007	Div II (1D624)	Q	Div II (52AX, 52BX)	Q	
FM1E21001	M1-E21-35	006	Div II (PT-E21-1N001B)	Q	Div II (PI-E21-1R600B)	Q	
FM1E21001	M1-E21-35	006	Div II (FT-E21-1N003B)	Q	Div II (FI-E21-1R601B)	Q	
FM1E41002	M1-E41-69	006	Div II (PT-E41-1N008,09,13,)	Q	PI-E41-1R602,3,6	Non Class 1E	
FM1E41002	M1-E41-69	006	Div II (PT-E41-1N016)	Q	Div II (PI-E41-1R601)	Q	
FM1E51001	M1-E51-90	004	Div II (1D624)	Q	Div II (LIS-B21-1N024C)	Q	
FM1E51001	M1-E51-90	004	Div II (1D624)	Q	Div II (PSL-E51-1N014B)	Q	
FM1E51001	M1-E51-90	004	Div II (1D624)	Q	Div II (PDIS-E51-1N018)	Q	
FM1E51001	M1-E51-90	008	Div II (1D264)	Q	Div II (HV-E51-1F084)	Q	
FM1E51002	M1-E51-90	004	Div II (1D624)	Q	Div II (PSH-E51-1N012B)	Q	
FM1E51002	M1-E51-90	004	Div II (1D624)	Q	Div II (PSL-E51-1N019D)	Q	

Q Loads in Contact with PI-E21-1R600B

CABLES	DWG	SH	FROM	SEPGR(FRM)	TO	SEPGR(TO)	ISOLATED
FM1E51002	M1-E51-90	009	Div II (1D624)	Q	Div II (HV-E51-1F005,26,88))	Q	
FM1I1212D	E-153	035	Div II (TT-15127B)	Q	Div II (TI-15127B)	Q	
FM1I2604C	J-426	003	Div II (PT-12649)	Q	Div II (PI-12649)	Q	
FM1I4203H	J-442	003	Div II (LT-14203B)	Q	Div II (LI-14203B)	Q	
FM1I4203J	J-442	003	Div II (LT-14202B)	Q	Div II (LR-14202)	Q	
FM1I4203M	J-442	003	Div II (PT-14201B)	Q	Divi II (1C651)	Q	
FM1I4203N	J-442	003	Div II (LT-14203B)	Q	Div I (LI-14201B1)	Q	
FM1I5102F	J-470	002	Div II (FY-15120B,21B)	Q	Div II (FI-15120B)	Q	
FM1I5706G	J-457	003A	Div II (PT-15729B)	Q	Div II (PY-15729B)	Q	
FM1I5708B	J-457	003A	Div II (PT-15729B)	Q	Div II (PR-15710B)	Q	
FM1J2V301	J-411	003	Div II (PT-01107B)	Q	Div II (PI-01107B)	Q	
FM1J2V301	J-411	003	Div II (FY-01109B)	Q	Div II (FI-01109B)	Q	
FM1J2V301	J-411	005	Div II (TT-01106B)	Q	Div II (TI-01106B)	Q	
FM1J45201	J-457	002A	Div II (LSL-15775B)	Q	Div II (LI-15775B)	Q	
FM1J45202	J-457	002A	Divi II (LT-15775B)	Q	Div II (LR-15776B)	Q	
FM1J45202	J-457	002A	Divi II (PMA1 Power Supply)	Q	Div II (LR-15776B)	Q	
FM1J45202	J-457	003A	Divi II (PY-15709B,10B)	Q	Div II (PR-15710B)	Q	
FM1J45202	J-457	007A	Divi II (TT-15790B)	Q	Div II (TR-15790B1)	Q	
FM1PM1204	M1-E11-66	010	Div II (FY-E11-1K600B)	Q	Div II (FI-E11-1R603B)	Q	

R1

Q Loads in Contact with PI-E21-1R600B

CABLES	DWG	SH	FROM	SEPGR(FRM)	TO	SEPGR(TO)	ISOLATED
FM1PM1204	M1-E11-66	011	Div II (PT-E11-1N026B)	Q	PI-1R606B1	Non Class 1E	
FM1PN1201	M1-E21-35		Div II (PT-E21-1N003B)	Q	PI-E21-1R600B	Non Class 1E	
FM1PN1201	M1-E21-35	006	Div II (FT-E21-1N001B)	Q	Div I (FI-E21-1R601B)	Q	
FM1PP1203	M1-E41-69	006	Div II (PT-E41-1N0013,16,19)	Q	PI-E41-1R602,3,6	Non Class 1E	
FM1PP1203	M1-E41-69	006	Div II (PT-E41-1N009)	Q	Div I (PI-E41-1R601)	Q	
FM1Q0835D	E-304	018	FT-E11-1N003B (Press Boundary))	Q	Div II (Iso Mux XIT-15701B)	Q	
NK1Q0054A	J-439	008	RY-13961B (Isolation Device)	Q	ES-B31-1K600	Non Class 1E	YES
NM1Q0835F	E-304	018	PDT-C32-1N017 (Press Boundary)	Q	SPDS-NFL-004Z	Non Class 1E	
NM1Q0835F	E-304	018	PT-C32-1N008 (Press Boundary)	Q	SPDS-NFP-001Z	Non Class 1E	
NM1Q0835F	E-304	018	PT-C32-1N005 (Press Boundary)	Q	SPDS-NFP-002Z	Non Class 1E	
NM1Q0835F	E-304	018	PDT-C32-1N004C (Press Boundary)	Q	SPDS-NFL-003Z	Non Class 1E	
NM1Q0835F	E-304	018	PDT-C32-1N004B (Press Boundary)	Q	SPDS-NFL-002Z	Non Class 1E	
NM1Q0835F	E-304	018	PDT-C32-1N004A (Press Boundary)	Q	SPDS-NFL-001Z	Non Class 1E	

R1

Q Loads in Contact with PI-E41-1R602, 1R603, 1R606, SI-E41-1R604

CABLES	DWG	SH	FROM	SEPGR(FRM)	TO	SEPGR(TO)	ISOLATED
BK1E11004	M1-E11-66	006	Ch B (1D624)	Q	Ch B (K10A)	Q	
BK1E11004	M1-E11-66	015	Ch B (1D624)	Q	Ch B (74 Relays from valves))	Q	
BK1E36003	E-184	004	Ch B (1D624)	Q	Ch B (K11B)	Q	
BK1PN2703	M1-E21--35	006	Ch B (1B227)	Q	Ch B (HV-E21-1F004B)	Q	
BK1PN2703	M1-E21--35	006	Ch B (1D624)	Q	Ch B (1P206B)	Q	
BM0G2402C	E-023	006C	Ch B (0C512B)	Q	Ch B (XI-00034B)	Q	
BM1Q0703C	E-168	002	Ch B (Thermocouple)	Q	Ch B (Temp Sw to Iso Logic)	Q	
BM1Q0703D	E-168	002	Ch B (Thermocouple)	Q	Ch B (Temp Sw to Iso Logic)	Q	R1
BM1Q0703E	E-168	002	Ch B (Thermocouple)	Q	Ch B (Temp Sw to Iso Logic)	Q	
BM1Q0703F	E-168	002	Ch B (Thermocouple)	Q	Ch B (Temp Sw to Iso Logic)	Q	
BM1Q0703G	E-168	002	Ch B (Thermocouple)	Q	Ch B (Temp Sw to Iso Logic)	Q	
BM1Q0703H	E-168	002	Ch B (Thermocouple)	Q	Ch B (Temp Sw to Iso Logic)	Q	
BM1Q0703J	E-168	002	Ch B (Thermocouple)	Q	Ch B (Temp Sw to Iso Logic)	Q	
BM1Q0703K	E-168	002	Ch B (Thermocouple)	Q	Ch B (Temp Sw to Iso Logic)	Q	
BM1Q0703L	E-168	002	Ch B (Thermocouple)	Q	Ch B (Temp Sw to Iso Logic)	Q	
BM1Q0703M	E-168	002	Ch B (Thermocouple)	Q	Ch B (Temp Sw to Iso Logic)	Q	
BM1Q0703N	E-168	002	Ch B (Thermocouple)	Q	Ch B (Temp Sw to Iso Logic)	Q	
BM1Q0703P	E-168	002	Ch B (Thermocouple)	Q	Ch B (Temp Sw to Iso Logic)	Q	
BM1Q0703R	E-168	002	Ch B (Thermocouple)	Q	Ch B (Temp Sw to Iso Logic)	Q	

Q Loads in Contact with PI-E41-1R602, 1R603, 1R606, SI-E41-1R604

CABLES	DWG	SH	FROM	SEPGR(FRM)	TO	SEPGR(TO)	ISOLATED
BM1Q0703S	E-168	002	Ch B (Thermocouple)	Q	Ch B (Temp Sw to Iso Logic)	Q	
BM1Q0704C	E-168	002	Ch B (Thermocouple)	Q	Ch B (Temp Sw to Iso Logic)	Q	
BM1Q0704D	E-168	002	Ch B (Thermocouple)	Q	Ch B (Temp Sw to Iso Logic)	Q	
BM1Q0704E	E-168	002	Ch B (Thermocouple)	Q	Ch B (Temp Sw to Iso Logic)	Q	
BM1Q0704F	E-168	002	Ch B (Thermocouple)	Q	Ch B (Temp Sw to Iso Logic)	Q	
BM1Q0704G	E-168	002	Ch B (Thermocouple)	Q	Ch B (Temp Sw to Iso Logic)	Q	
BM1Q0704H	E-168	002	Ch B (Thermocouple)	Q	Ch B (Temp Sw to Iso Logic)	Q	
BM1Q0704J	E-168	002	Ch B (Thermocouple)	Q	Ch B (Temp Sw to Iso Logic)	Q	
BM1Q0704K	E-168	002	Ch B (Thermocouple)	Q	Ch B (Temp Sw to Iso Logic)	Q	
BM1Q0704L	E-168	002	Ch B (Thermocouple)	Q	Ch B (Temp Sw to Iso Logic)	Q	R1
BM1Q0704M	E-168	002	Ch B (Thermocouple)	Q	Ch B (Temp Sw to Iso Logic)	Q	
BM1Q0704N	E-168	002	Ch B (Thermocouple)	Q	Ch B (Temp Sw to Iso Logic)	Q	
BM1Q0704P	E-168	002	Ch B (Thermocouple)	Q	Ch B (Temp Sw to Iso Logic)	Q	
BM1Q0704R	E-168	002	Ch B (Thermocouple)	Q	Ch B (Temp Sw to Iso Logic)	Q	
BM1Q0704S	E-168	002	Ch B (Thermocouple)	Q	Ch B (Temp Sw to Iso Logic)	Q	
BM1Q0704T	E-168	002	Ch B (Thermocouple)	Q	Ch B (Temp Sw to Iso Logic)	Q	
BM1Q0704U	E-168	002	Ch B (Thermocouple)	Q	Ch B (Temp Sw to Iso Logic)	Q	
FK1E11002	M1-E11-66	007	Div II (1D624)	Q	Div II (K7B,8B Relays)	Q	
FK1E11003	M1-E11-66	007	Div II (1D624)	Q	Div II (52a-20202)	Q	

Q Loads in Contact with PI-E41-1R602, 1R603, 1R606, SI-E41-1R604

CABLES	DWG	SH	FROM	SEPGR(FRM)	TO	SEPGR(TO)	ISOLATED
FK1E11003	M1-E11-66	007	Div II (1D624)	Q	Div II (FS-E11-1N021B)	Q	
FK1E11003	M1-E11-66	007	Div II (1D624)	Q	Div II (HV-E11-1F008)	Q	
FK1E11003	M1-E11-66	007	Div II (1D624)	Q	Div II (PIS-B31-1N018B)	Q	
FK1E11003	M1-E11-66	007	Div II (1D624)	Q	Div II (Z12X-1F009)	Q	
FK1E11003	M1-E11-66	008	Div II (1D624)	Q	Div II (HV-E11-1F006B)	Q	
FK1E11005	M1-E11-66	018	Div II (1B246)	Q	Div II (HV-E11-1F048B)	Q	
FK1E11006	M1-E11-66	018	Div II (1B226)	Q	Div II (HV-E11-1F016B)	Q	
FK1E11006	M1-E11-66	019	Div II (1B229)	Q	Div II (HV-E11-1F015B)	Q	
FK1E11007	M1-E11-66	018	Div II (1B246)	Q	Div II (HV-E11-1F027B)	Q	
FK1E11007	M1-E11-66	019	Div II (1B226)	Q	Div II (HV-E11-1F028B)	Q	
FK1E11008	M1-E11-66	018	Div II (1B227)	Q	Div II (HV-E11-1F021B)	Q	
FK1E11008	M1-E11-66	018	Div II (1B227)	Q	Div II (HV-E11-1F024B)	Q	
FK1E11017	M1-E11-66	011	Div II (PT-E11-1N026B)	Q	PI-E11-1R606B1	Non Class 1E	
FK1E11018	M1-E11-66	019	Div II (1Y226)	Q	Divi II (HV-E11-1F060B)	Q	
FK1E41003	M1-E41-69	005	Div II (1D624)	Q	Div II (LIS-B21-1N031B)	Q	
FK1E41003	M1-E41-69	007	Div II (1D264)	Q	Div II (HV-E41-1F003)	Q	
FK1E41004	M1-E41-69	008	Div II (1D264)	Q	Div II (HV-E41-1F006)	Q	
FK1E41004	M1-E41-69	009	Div II (1D624)	Q	Div II (LSH-E41-1N014, S14)	Q	
FK1P81805	M1-E51-90	009	Div II (1D624)	Q	Div II (HV-E51-1F0005,26,88)	Q	

R1

Q Loads in Contact with PI-E41-1R602, 1R603, 1R606, SI-E41-1R604

CABLES	DWG	SH	FROM	SEPGR(FRM)	TO	SEPGR(TO)	ISOLATED
FK1P81807	M1-E51-90	011	Div II (K55 Relay)	Q	Div II (RCIC Status)	Q	
FK1PM1201	M1-E11-66	014	Div II (1Y226)	Q	FR-E11-1R608	Non Class 1E	
FK1PM1203	M1-E11-66	014	Div II (1Y226)	Q	Div II (RHR Sys 2 Status)	Q	
FK1PM1206	M1-E11-66	019	Div II (1Y226)	Q	Div II (HV-E11-1F060B)	Q	
FK1PM1801	M1-E11-66	019	Div II (1B229)	Q	Div II (HV-E11-1F015B)	Q	
FK1PM1803	M1-E11-66	007	Div II (1D246)	Q	Div II (S32B)	Q	
FK1PM1803	M1-E11-66	008	Div II (1D246)	Q	Div II (S17B, S3B)	Q	
FK1PM1804	M1-E11-66	007	Div II (1D624)	Q	Div II (S20B, S56B)	Q	
FK1PM1804	M1-E11-66	008	Div II (1D624)	Q	Div II (S3B)	Q	
FK1PM1804	M1-E11-66	009	Div II (1D624)	Q	Div II (S1B, S56B)	Q	R1
FK1PM1809	M1-E11-66	018	Div II (1B246)	Q	Div II (HV-E11-1F027B)	Q	
FK1PM1809	M1-E11-66	018	Div II (1B247)	Q	Div II (HV-E11-1F024B)	Q	
FK1PM1810	M1-E11-66	018	Div II (1B227)	Q	Div II (HV-E11-1F021B)	Q	
FK1PM1810	M1-E11-66	019	Div II (1B226)	Q	Div II (HV-E11-1F017B)	Q	
FK1PM1813	M1-E11-66	018	Div II (1B227)	Q	Div II (HV-E11-1F021B)	Q	
FK1PMX804	M1-E11-66	008	Div II (1D624)	Q	Div II (K9A)	Q	
FK1PMX804	M1-E11-66	019	Div II (1B229)	Q	Div II (K67A)	Q	
FK1PMX806	M1-E11-66	008	Div II (1D624)	Q	Div II (K200A)	Q	
FK1PN2701	M1-E21-35	008	Div II (1Y226)	Q	Div II (CS Sys 2 Status)	Q	

Q Loads in Contact with PI-E41-1R602, 1R603, 1R606, SI-E41-1R604

CABLES	DWG	SH	FROM	SEPGR(FRM)	TO	SEPGR(TO)	ISOLATED
FK1PN2702	M1-E21-35	006	Div II (1B247)	Q	Div II (HV-E21-1F015B)	Q	
FK1PN2702	M1-E21-35	006	Div II (1B227)	Q	Div II (HV-E21-1F004B)	Q	
FK1PN2704	M1-E21-35	004	Div II (1D624)	Q	Div II (S1B,5B,16B,17B)	Q	
FK1PN2704	M1-E21-35	006	Div II (1B227)	Q	Div II (HV-E21-1F005B)	Q	
FK1PN2705	M1-E21-35	006	Div II (1B227)	Q	Div II (HV-E21-1F005B)	Q	
FK1PN2705	M1-E21-35	006	Div II (1Y226)	Q	Div II (HV-E21-1F006B,7B)	Q	
FK1PN2706	M1-E21-35	006	Div II (1Y226)	Q	Div II)HV-E21-1F037B)	Q	
FK1PNT702	M1-E21-35	004	Div II (1D624)	Q	Div II (K32A)	Q	
FK1PP1201	M1-E41-69	003	Div II (ES-E41-1K600)	Q	Div II (K50, FC-E41-1R600)	Q	R1
FK1PP1202	M1-E41-69	011	Div II (K50)	Q	Div II (HPCI Status)	Q	
FK1PP1204	M1-E41-69	011	Div II (K 50)	Q	Div II (S2)	Q	
FK1PP2001	M1-E41-69	003	Div II (K35, K1)	Q	Div II (HPCI Status)	Q	
FK1PP2001	M1-E41-69	003	Div II (1Y226)	Q	Div II (HPCI Status)	Q	
FK1PP2002	M1-E41-69	004	Div II (1D624)	Q	Div II (S25)	Q	
FK1PP2002	M1-E41-69	008	Div II (1D264)	Q	Div II (HV-E11-1F011)	Q	
FK1PP2003	M1-E41-69	008	Div II (1D264)	Q	Div II (HV-E41-1F059)	Q	
FK1PP2003	M1-E41-69	008	Div II (1D274)	Q	Div II (HV-E41-1F006)	Q	
FK1PP2004	M1-E41-69	008	Div II (1D264)	Q	Div II (HV-E41-1F042)	Q	
FK1PP2004	M1-E41-69	008	Div II (1D274)	Q	Div II (HV-E41-1F075)	Q	

Q Loads in Contact with PI-E41-1R602, 1R603, 1R606, SI-E41-1R604

CABLES	DWG	SH	FROM	SEPGR(FRM)	TO	SEPGR(TO)	ISOLATED
FK1PP2004	M1-E41-69	009	Div II (1D624)	Q	Div II (HV-E41-1F054)	Q	
FK1PP2005	M1-E41-69	007	Div II (1D274)	Q	Div II (HV-E41-1F008)	Q	
FK1PP2005	M1-E41-69	008	Div II (1D264)	Q	Div II (HV-E41-1F004)	Q	
FK1PP2005	M1-E41-69	009	Div II (1D624)	Q	Div II (HV-E41-1F054)	Q	
FK1PP2006	M1-E41-69	007	Div II (1D264)	Q	Div II (HV-E41-1F012)	Q	
FK1PP2006	M1-E41-69	007	Div II (1D274)	Q	Div II (HV-E41-1F007)	Q	
FK1PP2006	M1-E41-69	007	Div II (1D624)	Q	Div II (HV-E41-1F025)	Q	
FK1PP2007	M1-E41-69	007	Div II (1D264)	Q	Div II (HV-E41-1F001,3)	Q	R1
FK1PP2007	M1-E41-69	009	Div II (1D624)	Q	Div II (HV-E41-1F029)	Q	
FK1PP2008	M1-E41-69	004	Div II (1D624)	Q	Div II (S20, S19)	Q	
FK1PP2008	M1-E41-69	005	Div II (1D624)	Q	Div II (S18)	Q	
FK1PP2008	M1-E41-69	009	Div II (1D624)	Q	Div II (HPCI Tur Stop Valve))	Q	
FK1PP2008	M1-E41-69	009	Div II (1D624)	Q	Div II (HV-E41-1F029)	Q	
FK1PP2009	M1-E41-69	004	Div II (1D624)	Q	Div II (S32, 33)	Q	
FK1PP2009	M1-E41-69	007	Div II (1D274)	Q	Div II (1P213)	Q	
FK1PP2009	M1-E41-69	007	Div II (1D274)	Q	Div II (1P215,6)	Q	
FK1PP2011	M1-E41-69	007	Div II (1D264)	Q	Div II (HV-E41-1F003)	Q	
FK1PP2011	M1-E41-69	008	Div II (1D264)	Q	Div II (HV-E41-1F075)	Q	
FK1PP2012	M1-E41-69	008	Div II (1D264)	Q	Div II (HV-E41-1F004,6)	Q	

Q Loads in Contact with PI-E41-1R602, 1R603, 1R606, SI-E41-1R604

CABLES	DWG	SH	FROM	SEPGR(FRM)	TO	SEPGR(TO)	ISOLATED
FK1PP2013	M1-E41-69	007	Div II (1D264)	Q	Div II (HV-E41-1F012)	Q	
FK1PP2X01	M1-E41-69	005	Div II (1D624)	Q	Div II (S4B)	Q	
FK1PPXX03	M1-E41-69	004	Div II (1D624)	Q	Div II (K44, K45)	Q	
FK1PQ1802	M1-E51-90	005	Div II (1Y226)	Q	Div II (RCIC Status)	Q	
FK1PQ1802	M1-E51-90	011	Div II (K33, K43 Relays)	Q	Div II (RCIC Status)	Q	
FK1PQ1803	M1-E51-90	008	Div II (1D264)	Q	Div II (HV-E51-1F084)	Q	
FK1PQ1804	M1-E51-90	004	Div II (1D624)	Q	Div II (S26)	Q	
FK1PQ1804	M1-E51-90	009	Div II (1D624)	Q	Div II (HV-E51-1F0005,26,88)	Q	R1
FK1PQ1804	M1-E51-90	009	Div II (1D624)	Q	Div II (S11B, S12B)	Q	
FK1PQD103	M1-E51-90	004	Div II (1D624)	Q	Div II (K40 Relay)	Q	
FK1PQX801	M1-E51-90	004	Div II (1D624)	Q	Div II (S3B-B21B)	Q	
FK1Q0109D	E-170	001	Div II (HV-B31-1F020)	Q	Div II (1Y226-09)	Q	
FM0I1102D	J-411	003	Div II (PT-01107B)	Q	Div II (PI-01107B)	Q	
FM0I1102E	J-411	003	Div II (FT-01109B)	Q	Div II (FY-01109B1)	Q	
FM0I1106F	J-411	005	Div II (TE-01106B)	Q	Div II (TT-01106B)	Q	
FM1E11002	M1-E11-66	009	Div II (1D624)	Q	Div II (K19B-E21A)	Q	
FM1E11003	M1-E11-66	010	Div II (FT-E11-1N007B)	Q	Div II (FY-11207B2)	Q	
FM1E11003	M1-E11-66	010	Div II (FT-E11-1N015B)	Q	Div.II (FY-E11-1K600B)	Q	
FM1E11004	M1-E11-66	007	Div II (1D624)	Q	Div II (K110A-U2)	Q	

Q Loads in Contact with PI-E41-1R602, 1R603, 1R606, SI-E41-1R604

CABLES	DWG	SH	FROM	SEPGR(FRM)	TO	SEPGR(TO)	ISOLATED
FM1E11004	M1-E11-66	007	Div II (1D624)	Q	Div II (LIS-B21-1N013D)	Q	
FM1E11004	M1-E11-66	007	Div II (1D624)	Q	Div II (PS-E11-1N011B)	Q	
FM1E11004	M1-E11-66	008	Div II (1D624)	Q	Div II (52AX-20101)	Q	
FM1E11004	M1-E11-66	009	Div II (1D624)	Q	Div II (PIS-B21-1N021B,D)	Q	
FM1E11005	M1-E11-66	008	Div II (1D624)	Q	Div II (HV-E11-1F006D, 4D))	Q	
FM1E11006	M1-E11-66	007	Div II (1D624)	Q	Div II (52AX, 52BX)	Q	
FM1E21001	M1-E21-35	006	Div II (FT-E21-1N003B)	Q	Div II (FI-E21-1R601B)	Q	
FM1E21001	M1-E21-35	006	Div II (PT-E21-1N001B)	Q	Div II (PI-E21-1R600B)	Q	R1
FM1E41002	M1-E41-69	006	Div II (PT-E41-1N008.09.13,)	Q	PI-E41-1R602,3,6	Non Class 1E	
FM1E41002	M1-E41-69	006	Div II (PT-E41-1N016)	Q	Div II (PI-E41-1R601)	Q	
FM1E51001	M1-E51-90	004	Div II (1D624)	Q	Div II (LIS-B21-1N024C)	Q	
FM1E51001	M1-E51-90	004	Div II (1D624)	Q	Div II (PDIS-E51-1N018)	Q	
FM1E51001	M1-E51-90	004	Div II (1D624)	Q	Div II (PSL-E51-1N014B)	Q	
FM1E51001	M1-E51-90	008	Div II (1D264)	Q	Div II (HV-E51-1F084)	Q	
FM1E51002	M1-E51-90	004	Div II (1D624)	Q	Div II (PSH-E51-1N012B)	Q	
FM1E51002	M1-E51-90	004	Div II (1D624)	Q	Div II (PSL-E51-1N019D)	Q	
FM1E51002	M1-E51-90	009	Div II (1D624)	Q	Div II (HV-E51-1F005,26,88))	Q	
FM1I1212D	E-153	035	Div II (TT-15127B)	Q	Div II (TI-15127B)	Q	
FM1I2601E	J-426	001	Div II (PT-12643)	Q	Div II (PSL-12643)	Q	

Q Loads in Contact with PI-E41-1R602, 1R603, 1R606, SI-E41-1R604

CABLES	DWG	SH	FROM	SEPGR(FRM)	TO	SEPGR(TO)	ISOLATED
FM1I2601F	J-426	001	Div II (PT-12648)	Q	Div II (PSL-12648)	Q	
FM1I2604C	J-426	003	Div II (PT-12649)	Q	Div II (PI-12649)	Q	
FM1I4203D	J-442	003	Div II (LT-14201B)	Q	Div II (LY-14201B)	Q	
FM1I4203E	J-442	003	Div II (LT-14203B)	Q	Div II (LY-14203B)	Q	
FM1I4203H	J-442	003	Div II (LT-14203B)	Q	Div II (LI-14203B)	Q	
FM1I4203J	J-442	003	Div II (LT-14202B)	Q	Div II (LR-14202)	Q	
FM1I4203M	J-442	003	Div II (PT-14201B)	Q	Divi II (1C651)	Q	
FM1I4203N	J-442	003	Div II (LT-14203B)	Q	Div I (LI-14201B1)	Q	
FM1I5102F	J-470	002	Div II (FY-15120B,21B)	Q	Div II (FI-15120B)	Q	R1
FM1I5702C	J-457	002A	Div II (LT-15776B)	Q	Div II (LY-15775B)	Q	
FM1I5706C	J-457	003A	Div II (PT-15710B)	Q	Div II (PY-15710B)	Q	
FM1I5706E	J-457	003A	Div II (PT-15709B)	Q	Div II (PY-15709B)	Q	
FM1I5706F	J-457	003A	Div II (PT-15729B)	Q	Div II (PY-15729B)	Q	
FM1I5706G	J-457	003A	Div II (PT-15729B)	Q	Div II (PY-15729B)	Q	
FM1I5706H	J-457	003A	Div II (PT-15729B)	Q	Div II (PY-15729B)	Q	
FM1I5708A	J-457	003A	Div II (PT-15729B)	Q	Div II (PR-15710B)	Q	
FM1I5708B	J-457	003A	Div II (PT-15729B)	Q	Div II (PR-15710B)	Q	
FM1I5715G	J-457	007A	Div II (TE-15790B)	Q	Div II (TT-15790B)	Q	
FM1I5715J	J-457	007A	Div II (TE-15799B)	Q	Div II (TT-15799B)	Q	

Q Loads in Contact with PI-E41-1R602, 1R603, 1R606, SI-E41-1R604

CABLES	DWG	SH	FROM	SEPGR(FRM)	TO	SEPGR(TO)	ISOLATED
FM1I5715K	J-457	007A	Div II (TE-15799B)	Q	NONE (SPARE)		
FM1I9803C	J-498	004	Div II (FT-E11-1N015B)	Q	Div II (FY-15105)	Q	
FM1I9803D	J-498	004	Div II (FT-E11-1N007B)	Q	Div II (FY-11207B2)	Q	
FM1I9803E	J-498	004	Div II (PT-15728B)	Q	Div II (PI-15728B)	Q	
FM1I9803F	J-498	004	Div II (TE-15790B)	Q	Divi II (TT-15790B2)	Q	
FM1I9803G	J-498	004	Division II	Q	Division II		
FM1I9803H	J-498	004	Div II (LT-15776B)	Q	Div.II (LSL-15775B)	Q	
FM1I9804K	J-498	005	Division II	Q	Division II		
FM1J2V301	J-411	003	Div II (FY-01109B)	Q	Div II (FI-01109B)	Q	R1
FM1J2V301	J-411	003	Div II (PT-01107B)	Q	Div II (PI-01107B)	Q	
FM1J2V301	J-411	005	Div II (TT-01106B)	Q	Div II (TI-01106B)	Q	
FM1J45201	J-457	002A	Div II (LSL-15775B)	Q	Div II (LI-15775B)	Q	
FM1J45202	J-457	002A	Divi II (LT-15775B)	Q	Div II (LR-15776B)	Q	
FM1J45202	J-457	002A	Divi II (PMA1 Power Supply)	Q	Div II (LR-15776B)	Q	
FM1J45202	J-457	003A	Divi II (PY-15709B,10B)	Q	Div II (PR-15710B)	Q	
FM1J45202	J-457	007A	Divi II (TT-15790B)	Q	Div II (TR-15790B1)	Q	
FM1PM1204	M1-E11-66	010	Div II (FY-E11-1K600B)	Q	Div II (FI-E11-1R603B)	Q	
FM1PM1204	M1-E11-66	011	Div II (PT-E11-1N026B)	Q	PI-1R606B1	Non Class 1E	
FM1PN1201	M1-E21-35		Div II (PT-E21-1N003B)	Q	PI-E21-1R600B	Non Class 1E	

Q Loads in Contact with PI-E41-1R602, 1R603, 1R606, SI-E41-1R604

CABLES	DWG	SH	FROM	SEPGR(FRM)	TO	SEPGR(TO)	ISOLATED
FM1PN1201	M1-E21-35	006	Div II (FT-E21-1N001B)	Q	Div I (FI-E21-1R601B)	Q	
FM1PP1203	M1-E41-69	006	Div II (PT-E41-1N009)	Q	Div I (PI-E41-1R601)	Q	
FM1PP1203	M1-E41-69	006	Div II (PT-E41-1N0013,16,19)	Q	PI-E41-1R602,3,6	Non Class 1E	
FM1Q0048G	J-457	016	Div II (NT-15725B)	Q	Div II (NIT-15725B)	Q	
FM1Q0048H	J-457	016	Div II (NIT-15725B)	Q	Div II (NIS-15724B)	Q	
FM1Q0048J	J-457	016	Div II (NIT-15725B)	Q	Div II (NI-15725B)	Q	
FM1Q0048K	J-457	016	Div II (NIT-15725B)	Q	Div II (NI-15726B)	Q	
FM1Q0121C	E-170	001	Div II (Deleted But Installed)	Q			
FM1Q0121D	E-170	001	Div II (ES-B21-1K613B)	Q	Div II (LITS-B21-1N026A)	Q	
FM1Q0623C	E-165	005	Div II (FY-G33-1K602,3,5)	Q	Divi II (FT-G33-1N012,36,41	Q	
FM1Q0824C	E-155	008	Div II (ES-E21-1K600B)	Q	Div II (FT-E21-1N003B)	Q	
FM1Q0824D	E-155	008	Div II (ES-E21-1K600B)	Q	Div II (PT-E21-1N001B)	Q	
FM1Q0835D	E-304	018	FT-E11-1N003B (Press Boundary))	Q	Div II (Iso Mux XIT-15701B)	Q	
FM1Q3067C	E-153	035	Div II (ES-E11-1K603B)	Q	Div II (PT-E11-1N026B)	Q	
FM1Q3067E	E-153	035	Div II (ES-E11-1K603B)	Q	Div II (PT-E11-1N015B)	Q	
FM1Q3067G	E-153	035	Div II (ES-E11-1K603B)	Q	Div II (FT-E11-1N007B)	Q	
FM1Q4022C	E-152	001	Div II (HPCI Governor Control)	Q	SI-E41-1R604	Non Class 1E	
FM1Q4022E	E-152	001	Div II (HPCI Governor Control)	Q	Div II (1C601)	Q	
FM1Q4024C	E-152	001	Div II (ES-E41-1K600)	Q	Div II (HPCI Transmitters)	Q	

R1

Q Loads in Contact with PI-E41-1R602, 1R603, 1R606, SI-E41-1R604

CABLES	DWG	SH	FROM	SEPGR(FRM)	TO	SEPGR(TO)	ISOLATED
FM1Q4192C	E-187	001	Div I (1B226)	Q	Divi I (1E440B)	Q	
FM1Q4192D	E-187	001	Div I (1B226)	Q	Divi I (1E440B)	Q	
FM1Q4194C	E-187	001	Div I (1B246)	Q	Divi I (1E440D)	Q	
FM1Q4194D	E-187	001	Div I (1B246)	Q	Divi I (1E440D)	Q	
FM1Q6527C	E-189	005	Div II (1C644)	Q	Div II (TE-E32-1N005B)	Q	
FM1Q6527D	E-189	005	Div II (1C644)	Q	Div II (TE-E32-1N005F)	Q	
FM1Q6527E	E-189	005	Div II (1C644)	Q	Div II (TE-E32-1N005K)	Q	
FM1Q6527F	E-189	005	Div II (1C644)	Q	Div II (TE-E32-1N005P)	Q	
FM1Q6527G	E-189	005	Div II (1C644)	Q	Divi II (PT-E32-1N050,60)	Q	
FM1Q6527H	E-189	005	Div II (1C644)	Q	Divi II (FT-E32-1N053B,F)	Q	
FM1Q6527J	E-189	005	Div II (1C644)	Q	Divi II (FT-E32-1N053K,P)	Q	
FM1Q6527K	E-189	005	Div II (1C644)	Q	Divi II (PT-E32-1N051B,F,K,P)	Q	
FM1Q6527L	E-189	005	Div II (1C644)	Q	Divi II (PT-E32-1N054)	Q	
FM1Q6527R	E-189	005	Div II (1C644)	Q	Divi II (PT-E32-1N054)	Q	
FM1S1601F	E-267	001A	Div II (1C693)	Q	Div II (1C292B)	Q	
FM1S1601J	E-267	001A	Div II (1C693)	Q	Div II (1C292B)	Q	
FM1S1603C	E-267	003	Div II (1C690B)	Q	Div II 1C226B)	Q	
NK1Q0054A	J-439	008	RY-13961B (Isolation Device)	Q	ES-B31-1K600	Non Class 1E	YES
NM1Q0835F	E-304	018	PDT-C32-1N004A (Press Boundary)	Q	SPDS-NFL-001Z	Non Class 1E	

R1

Q Loads in Contact with PI-E41-1R602, 1R603, 1R606, SI-E41-1R604

CABLES	DWG	SH	FROM	SEPGR(FRM)	TO	SEPGR(TO)	ISOLATED
NM1Q0835F	E-304	018	PDT-C32-1N004B (Press Boundary)	Q	SPDS-NFL-002Z	Non Class 1E	
NM1Q0835F	E-304	018	PDT-C32-1N004C (Press Boundary)	Q	SPDS-NFL-003Z	Non Class 1E	
NM1Q0835F	E-304	018	PDT-C32-1N017 (Press Boundary)	Q	SPDS-NFL-004Z	Non Class 1E	
NM1Q0835F	E-304	018	PT-C32-1N005 (Press Boundary)	Q	SPDS-NFP-002Z	Non Class 1E	
NM1Q0835F	E-304	018	PT-C32-1N008 (Press Boundary)	Q	SPDS-NFP-001Z	Non Class 1E	
RM0I1202D	J-412	002	Divi II Aff (FT-01204B)	Q	FY-01204B1	Non Class 1E	YES
RM1I9804J	J-498	005	Division II Affiliated	Q	TT-15725	Non Class 1E	YES
RM1I9804M	J-498	005	Division II Affiliated	Q	TT-15725	Non Class 1E	YES

RI

Q Loads in Contact with PI-E51-1R601, 1R602, 1R603, 1R604, SI-15001A

CABLES	DWG	SH	FROM	SEPGR(FRM)	TO	SEPGR(TO)	ISOLATED
AK1E11017	M1-E11-66	017	Ch A (1B216)	Q	Ch A (HV-E11-1F015A)	Q	
AK1E11017	M1-E11-66	020	Ch A (1D614)	Q	Ch A (1P202A)	Q	
AK1PM1705	M1-E11-66	016	Ch A (1B237)	Q	Ch A (HV-E11-1F048A)	Q	
AK1PM1705	M1-E11-66	016	Ch A (1D614)	Q	Ch A (1P202A)	Q	
AK1PM1705	M1-E11-66	016	Ch A (1Y216)	Q	Ch A (SV-11274A)	Q	
AM0G2401C	E-023	006	Ch A (Frequency Tranducer)	Q	Ch A (XI-00034A)	Q	
AM1Q0701C	E-168	002	Ch A (Thermocouple)	Q	Ch A (Temp Sw to Iso Logic)	Q	R1
AM1Q0701D	E-168	002	Ch A (Thermocouple)	Q	Ch A (Temp Sw to Iso Logic)	Q	
AM1Q0701F	E-168	002	Ch A (Thermocouple)	Q	Ch A (Temp Sw to Iso Logic)	Q	
AM1Q0701G	E-168	002	Ch A (Thermocouple)	Q	Ch A (Temp Sw to Iso Logic)	Q	
AM1Q0701H	E-168	002	Ch A (Thermocouple)	Q	Ch A (Temp Sw to Iso Logic)	Q	
AM1Q0701J	E-168	002	Ch A (Thermocouple)	Q	Ch A (Temp Sw to Iso Logic)	Q	
AM1Q0701K	E-168	002	Ch A (Thermocouple)	Q	Ch A (Temp Sw to Iso Logic)	Q	
AM1Q0701L	E-168	002	Ch A (Thermocouple)	Q	Ch A (Temp Sw to Iso Logic)	Q	
AM1Q0701M	E-168	002	Ch A (Thermocouple)	Q	Ch A (Temp Sw to Iso Logic)	Q	
AM1Q0702H	E-168	001	Ch A (Thermocouple)	Q	Ch A (Temp Switch to Iso Logic)	Q	
AM1Q0702J	E-168	001	Ch A (Thermocouple)	Q	Ch A (Temp Switch to Iso Logic)	Q	
AM1Q0702K	E-168	001	Ch A (Thermocouple)	Q	Ch A (Temp Switch to Iso Logic)	Q	
AM1Q0702L	E-168	001	Ch A (Thermocouple)	Q	Ch A (Temp Switch to Iso Logic)	Q	

Q Loads in Contact with PI-E51-1R601, 1R602, 1R603, 1R604, SI-15001A

CABLES	DWG	SH	FROM.	SEPGR(FRM)	TO	SEPGR(T0)	ISOLATED
AM1Q0702P	E-168	001	Ch A (Thermocouple)	Q	Ch A (Temp Switch to Iso Logic)	Q	
AM1Q0702R	E-168	001	Ch A (Thermocouple)	Q	Ch A (Temp Switch to Iso Logic)	Q	
AM1Q0702S	E-168	001	Ch A (Thermocouple)	Q	Ch A (Temp Switch to Iso Logic)	Q	
AM1Q0702T	J-401	012	Ch A (TE-10100A)	Q	Ch A (TSH-10100A)	Q	
AM1Q0702U	J-401	012	Ch A (TE-10100B)	Q	Ch A (TSH-10100B)	Q	
EK0S0402P	E-146	005	Div I (1A20303)	Q	Div I (ESW RESET LOGIC)	Q	
EK1C41001	M1-C41-36	003	Div I (1Y216-07)	Q	Div I (C41-1F004B)	Q	
EK1C41002	M1-C41-36	003	Div I (1B217061)	Q	Div I (K2B-C41)	Q	
EK1C41003	M1-C41-36	003	Div I (1Y236-021)	Q	Div I (C41-F004A)	Q	
EK1E11001	M1-E11-66	004	Div I (1D614)	Q	Div I (K7A,8A-E21A)	Q	
EK1E11002	M1-E11-66	006	Div I (1D614)	Q	Div I (K19A-E21A)	Q	
EK1E11003	M1-E11-66	006	Div I (1D614)	Q	Div I (K9A-E21A)	Q	
EK1E11004	M1-E11-66	005	Div I (1D614)	Q	Div I (NO FOUND)	Q	
EK1E11006	M1-E11-66	017	Div I (1Y216)	Q	Div I (HV-E11-1F060A, 1F122A)	Q	
EK1E11007	M1-E11-66	004	Div I (1D614)	Q	Div I (K110A-U2, 52BX-20301)	Q	
EK1E11008	M1-E11-66	004	Div I (1D614)	Q	Div I (K110A-U2)	Q	
EK1E11009	M1-E11-66	004	Div I (2D614)	Q	Div I (K110A-U1)	Q	
EK1E11010	M1-E11-66	004	Div I (2D614)	Q	Div I (K110A-U1)	Q	
EK1E11011	M1-E11-66	017	Div I (1Y216)	Q	Div I (HV-E11-1F060A, 1F122A)	Q	

R1

Q Loads in Contact with PI-E51-1R601, 1R602, 1R603, 1R604, SI-15001A

CABLES	DWG	SH	FROM	SEPGR(FRM)	TO	SEPGR(T0)	ISOLATED
EK1E11012	M1-E11-66	010	Div I (FT-E11-1N007A)	Q	Div I (FY-11207A)	Q	
EK1E11012	M1-E11-66	010	Div I (FY-15189 Isolation Device)	Q	Div I (FT-E11-1N015A)	Q	
EK1E11012	M1-E11-66	011	Div I (PT-E11-1N026A)	Q	PI-E11-1R606A1	Non Class 1E	
EK1E11013	M1-E11-66	004	Div I (1D614)	Q	Div I (PS-E11-1N011A)	Q	
EK1E11013	M1-E11-66	004	Div I (1D614)	Q	Div I (PS-E11-1N021E,G)	Q	
EK1E11013	M1-E11-66	005	Div I (1D614)	Q	Div I (52AX-20201)	Q	
EK1E11014	M1-E11-66	005	Div I (1D614)	Q	Divi I (HV-E11-1F004C,6C	Q	
EK1E11015	M1-E11-66	004	Div I (1D614)	Q	Div I (52A-20102)	Q	
EK1E11015	M1-E11-66	004	Div I (1D614)	Q	Div I (Z1X-F008)	Q	
EK1E11015	M1-E11-66	004	Div I (1D614)	Q	Div I (FS-E11-1N021A)	Q	
EK1E11015	M1-E11-66	004	Div I (1D614)	Q	Div I (PIS-B31-1N016A)	Q	
EK1E11015	M1-E11-66	005	Div I (1D614)	Q	Div I (HV-E11-1F004A)	Q	
EK1E11015	M1-E11-66	005	Div I (1D614)	Q	Div I (HV-E11-1F006A)	Q	
EK1E11016	M1-E11-66	005	Div I (1D614)	Q	Divi I (52AX-20404, 09))	Q	
EK1E11016	M1-E11-66	016	Div I (1B236)	Q	Divi I (HV-E11-1F027A)	Q	
EK1E11018	M1-E11-66	019	Div I (1Y216)	Q	Divi I (HV-E51-1F050B)	Q	
EK1E11020	M1-E11-66	016	Div I (1B217)	Q	Div I (HV-E11-1F016A)	Q	
EK1E11021	M1-E11-66	007	Div I (1B216)	Q	Div I (HV-E11-1F028A)	Q	
EK1E11022	M1-E11-66	007	Div I (1B217)	Q	Divi I (HV-E11-1F021A)	Q	

R.t.

Q Loads in Contact with PI-E51-1R601, 1R602, 1R603, 1R604, SI-15001A

CABLES	DWG	SH	FROM	SEPGR(FRM)	TO	SEPGR(TO)	ISOLATED
EK1E11022	M1-E11-66	007	Div I (1B237)	Q	Divi I (HV-E11-1F024A)	Q	
EK1E11023	M1-E11-66	017	Div I (1Y216)	Q	Div I (HV-E11-1F050A)	Q	
EK1E21008	M1-E21-35	005	Div I (FT-E21-1N003A)	Q	Div I (FI-E21-1R601A)	Q	
EK1E21008	M1-E21-35	005	Div I (PT-E21-1N001A)	Q	Div I (PI-E21-1R60OA)	Q	
EK1E41001	M1-E41-69	005	Div I (1D614-07)	Q	Div I (K62 -E41)	Q	
EK1E41001	M1-E41-69	005	Div I (1D614-07)	Q	Div I (K63 -E41)	Q	
EK1E41001	M1-E41-69	005	Div I (1D614-07)	Q	Div I (K45 -E41)	Q	
EK1E41001	M1-E41-69	009	Div I (1D614-07)	Q	Div I (HV-E41-1F026)	Q	
EK1E41001	M1-E41-69	009	Div I (1Y216-07)	Q	Div I (HV-E41-1F100)	Q	R1
EK1E41001	M1-E41-69	009	Div I (1D614-07)	Q	Div I (HV-E41-1F028)	Q	
EK1E41002	M1-E41-69	005	Div I (1D614-07)	Q	Div I (K43 -E41)	Q	
EK1E41002	M1-E41-69	005	Div I (1D614-07)	Q	Div I (K46 -E41)	Q	
EK1E41004	M1-E41-69	008	Div I (HV-E41-1F079)	Q	Div I (42 Contactor)	Q	
EK1E51015	M1-E51-90	006	Div I (1D614-07)	Q	Div I (EGM Control)	Q	
EK1P8F201	M1-B31-275	014	Div I (1B219)	Q	Div I (K99A, K37A-E11A)	Q	
EK1P8F201	M1-B31-275	016	Div I (1B219)	Q	Div I (K99A, K37A-E11A)	Q	
EK1P8X801	M1-B31-275	014	Div I (K37A -E11)	Q	Div I (HV-B31-1F031A)	Q	
EK1P8X801	M1-B31-275	014	Div I (K39B -E11)	Q	Div I (HV-B31-1F023A)	Q	
EK1P8X801	M1-B31-275	014	Div I (K39B -E11)	Q	Div I (HV-B31-1F031A)	Q	

Q Loads in Contact with PI-E51-1R601, 1R602, 1R603, 1R604, SI-15001A

CABLES	DWG	SH	FROM	SEPGR(FRM)	TO	SEPGR(TO)	ISOLATED
EK1PC1701	M1-C41-36	003	Div I (1B236081)	Q	Div I (K2A -C41)	Q	
EK1PC1705	M1-C41-36	003	Div I (1Y216-07)	Q	Div I (XV-C41-1F004A,B)	Q	
EK1PC1706	M1-C41-36	003	Div I (1B217-061)	Q	Div I (K2B -C41)	Q	
EK1PM1304	M1-E11-66	017	Div I (1Y216)	Q	Div I (HV-E11-1F060A, 1F122A)	Q	
EK1PM1308	M1-E11-66	019	Div I (HV-E11-1F122B)	Q	Division I	Q	
EK1PM1309	M1-E11-66	013	Div I (1Y216)	Q	Div I (RHR Sys 1 Status)	Q	
EK1PM1701	M1-E11-66	011	Div I (1D614)	Q	Div I (HV-E11-1F103A,4A)	Q	
EK1PM1701	M1-E11-66	013	Div I (1Y216)	Q	Div I (RHR SYS1 Staus)	Q	
EK1PM1702	M1-E11-66	004	Div I (1D614)	Q	Div I (S32A)	Q	
EK1PM1702	M1-E11-66	005	Div I (1D614)	Q	Div I (S17A)	Q	
EK1PM1702	M1-E11-66	005	Div I (1D614)	Q	Div I (S3A)	Q	
EK1PM1703	M1-E11-66	004	Div I (1D614)	Q	Div I (S20A, S56A)	Q	
EK1PM1703	M1-E11-66	006	Div I (1D614)	Q	Div I (S1A, S56A)	Q	
EK1PM1703	M1-E11-66	017	Div I (K84)	Q	Div I (HV-E11-1F007A)	Q	
EK1PM1704	M1-E11-66	005	Div I (1D614)	Q	Div I (S3C)	Q	
EK1PM1704	M1-E11-66	017	Div I (1Y216)	Q	Div I (HV-E11-1F050A)	Q	
EK1PM1707	M1-E11-66	016	Div I (1B216)	Q	Div I (HV-E11-1F028A)	Q	
EK1PM1707	M1-E11-66	016	Div I (1B217)	Q	Div I (HV-E11-1F016A)	Q	
EK1PM1708	M1-E11-66	016	Div I (1B236)	Q	Div I (HV-E11-1F027A)	Q	

R1

Q Loads in Contact with PI-E51-1R601, 1R602, 1R603, 1R604, SI-15001A

CABLES	DWG	SH	FROM	SEPGR(FRM)	TO	SEPGR(TO)	ISOLATED
EK1PM1708	M1-E11-66	016	Div I (1B237)	Q	Div I (HV-E11-1F024A)	Q	
EK1PM1709	M1-E11-66	016	Div I (1B217)	Q	Div I (HV-E11-1F021A,)	Q	
EK1PM1709	M1-E11-66	017	Div I (1B216)	Q	Div I (HV-E11-1F017A,)	Q	
EK1PM1710	M1-E11-66	017	Div I(HV-E11-1F015A)	Q	Div I (1B219)	Q	
EK1PM1715	M1-E11-66	019	Div I (HV-E51-1F050B)	Q	Div I (1Y216)	Q	
EK1PMX801	M1-E11-66	005	Div I (1D614)	Q	Div I (K2B)	Q	
EK1PMX801	M1-E11-66	006	Div I (1D614)	Q	Div I (K35B,K36B,K47B,K91B)	Q	
EK1PMX807	M1-E11-66	005	Div I (K201B)	Q	M1-E11-66	Q	
EK1PMX808	M1-E11-66	005	Div I (K200B)	Q	M1-E11-66	Q	R1
EK1PN1301	M1-E21-35	005	Div I (FT-E21-1N003A)	Q	Div I (FI-E21-1R601A)	Q	
EK1PN1301	M1-E21-35	005	Div I (PT-E21-1N001A)	Q	PI-E21-1R600A	Non Class 1E	
EK1PP1701	M1-E41-69	003	Div I (1Y216-07)	Q	Div I (1C601)	Q	
EK1PP1702	M1-E41-69	003	Div I (1D614-07)	Q	Div I (HV-E41-1F026)	Q	
EK1PP1702	M1-E41-69	003	Div I (1D614-07)	Q	Div I (HV-E41-1F028)	Q	
EK1PP1702	M1-E41-69	003	Div I (1D614-07)	Q	Div I (HV-E41-1F100)	Q	
EK1PP1702	M1-E41-69	003	Div I (1D614-07)	Q	Div I (K39 -E41)	Q	
EK1PP1703	M1-E41-69	008	Div I (HV-E41-1F079)	Q	Div I Indicating Lights)	Q	
EK1PP1705	M1-E41-69	008	Div I (HV-E41-1F079)	Q	Div I (42 Contactor)	Q	
EK1PP1707	M1-E41-69	007	Div I (HV-E41-1F002)	Q	Div I (42 Contactor)	Q	

Q Loads in Contact with PI-E51-1R601, 1R602, 1R603, 1R604, SI-15001A

CABLES	DWG	SH	FROM	SEPGR(FRM)	TO	SEPGR(TO)	ISOLATED
EK1PPX701	M1-E41-69	005	Div I (1D614-07)	Q	Div I (K44 -E41)	Q	
EK1PPXX01	M1-E41-69	009	Div I (1D614-07)	Q	Div I (HV-E41-1F028)	Q	
EK1PQ1301	M1-E51-90	005	Div I (ES-E11-1K600)	Q	Div I (Distribution Bus)	Q	
EK1PQ1301	M1-E51-90	005	Div I (ES-E11-1K600)	Q	Div I (K47)	Q	
EK1Q0108E	M1-B21-131	011	Div I (1Y216-07)	Q	Div I (HV-B31-1F013)	Q	
EK1Q0200H	E-166	001	Div I (1B236081)	Q	Div I (K7A (1C690A)	Q	
EK1Q0201H	E-166	002	Div I (1B217061)	Q	Div I (K7B -1C690B)	Q	
EK1Q0627F	E-304	001	Div I (HV-16108A1)	Q	Div I (Iso Mux XIT-15701A)	Q	
EK1Q0627F	E-304	001	Div I (HV-16116A1)	Q	Div I (Iso Mux XIT-15701A)	Q	R1
EK1Q0627G	E-304	011	Div I (TIP Ball Valve)	Q	Div I (Iso Mux XIT-15701A)	Q	
EK1Q0837E	E-304	007	Div I (HV-E21-1F015A)	Q	Div I (Iso Mux XIT-15701A)	Q	
EK1Q1334D	E-304	006	Div I (HV-E51-1F062)	Q	Div I (Iso Mux XIT-15701A)	Q	
EK1Q1334D	E-304	006	Div I (HV-E51-1F008)	Q	Div I (Iso Mux XIT-15701A)	Q	
EK1Q1550D	E-304	010	Div I (HV-B21-1F022A)	Q	Div I (Iso Mux XIT-15701A)	Q	
EK1Q1550D	E-304	010	Div I (HV-B21-1F022B)	Q	Div I (Iso Mux XIT-15701A)	Q	
EK1Q1550E	E-304	010	Div I (HV-B21-1F001)	Q	Div I (Iso Mux XIT-15701A)	Q	
EK1Q1550E	E-304	010	Div I (HV-B21-1F016)	Q	Div I (Iso Mux XIT-15701A)	Q	
EK1Q1550F	E-304	010	Div I (HV-B21-1F022D)	Q	Div I (Iso Mux XIT-15701A)	Q	
EK1Q1550F	E-304	010	Div I (HV-B21-1F022C)	Q	Div I (Iso Mux XIT-15701A)	Q	

Q Loads in Contact with PI-E51-1R601, 1R602, 1R603, 1R604, SI-15001A

CABLES	DWG	SH	FROM	SEPGR(FRM)	TO	SEPGR(TO)	ISOLATED
EK1Q1550G	E-304	009	Div I (HV-E11-1F040)	Q	Div I (Iso Mux XIT-15701A)	Q	
EK1Q1550G	E-304	009	Div I (HV-B31-1F019)	Q	Div I (Iso Mux XIT-15701A)	Q	
EK1Q1550G	E-304	009	Div I (HV-E11-1F009)	Q	Div I (Iso Mux XIT-15701A)	Q	
EK1Q1550H	E-304	009	Div I (HV-B21-1F019)	Q	Div I (Iso Mux XIT-15701A)	Q	
EK1Q1550H	E-304	009	Div I (SV-E11-1F079A)	Q	Div I (Iso Mux XIT-15701A)	Q	
EK1Q1550H	E-304	009	Div I (SV-E11-1F079B)	Q	Div I (Iso Mux XIT-15701A)	Q	
EK1Q4036D	E-304	007	Div I (HV-E41-1F100)	Q	Div I (Iso Mux XIT-15701A)	Q	
EK1Q4036D	E-304	007	Div I (HV-E41-1F079)	Q	Div I (Iso Mux XIT-15701A)	Q	
EK1Q4036E	E-304	007	Div I (HV-E41-1F002)	Q	Div I (Iso Mux XIT-15701A)	Q	
EK1Q4036E	E-304	007	Div I (HV-E11-1F021A)	Q	Div I (Iso Mux XIT-15701A)	Q	
EK1Q4037A	E-304	003	Div I (HV-E11-1F016A)	Q	Div I (Iso Mux XIT-15701A)	Q	
EK1Q4037A	E-304	003	Div I (HV-E11-1F024A)	Q	Div I (Iso Mux XIT-15701A)	Q	
EK1Q4037A	E-304	003	Div I (HV-E11-1F027A)	Q	Div I (Iso Mux XIT-15701A)	Q	
EK1Q4037A	E-304	003	Div I (HV-E11-1F028A)	Q	Div I (Iso Mux XIT-15701A)	Q	
EK1Q4037D	E-304	007	Div I (HV-E11-1F022)	Q	Div I (Iso Mux XIT-15701A)	Q	
EK1Q4037E	E-304	007	Div I (HV-E11-1F008)	Q	Div I (Iso Mux XIT-15701A)	Q	
EK1Q4037F	E-304	012	Div I (HV-11314)	Q	Div I (Iso Mux XIT-15701A)	Q	
EK1Q4037G	E-304	014	Div I (SV-12661)	Q	Div I (Iso Mux XIT-15701A)	Q	
EK1Q4037G	E-304	014	Div I (SV-12671)	Q	Div I (Iso Mux XIT-15701A)	Q	

R1

Q Loads in Contact with PI-E51-1R601, 1R602, 1R603, 1R604, SI-15001A

CABLES	DWG	SH	FROM	SEPGR(FRM)	TO	SEPGR(TO)	ISOLATED
EK1Q4037H	E-304	014	Div I (SV-12651)	Q	Div I (Iso Mux XIT-15701A)	Q	
EK1Q4037J	E-304	009	Div I (HV-E11-1F015A)	Q	Div I (Iso Mux XIT-15701A)	Q	
EK1Q4037K	E-304	009	Div I (HV-12603)	Q	Div I (Iso Mux XIT-15701A)	Q	
EK1Q4037K	E-304	009	Div I (HV-15766)	Q	Div I (Iso Mux XIT-15701A)	Q	
EK1Q4037R	E-304	012	Div I (HV-11313)	Q	Div I (Iso Mux XIT-15701A)	Q	
EK1Q4189D	E-304	013	Div I (HV-15713)	Q	Div I (Iso Mux XIT-15701A)	Q	
EK1Q4189D	E-304	013	Div I (HV-15703)	Q	Div I (Iso Mux XIT-15701A)	Q	
EK1Q4189G	E-304	013	Div I (HV-15722)	Q	Div I (Iso Mux XIT-15701A)	Q	
EK1Q4189G	E-304	013	Div I (HV-15725)	Q	Div I (Iso Mux XIT-15701A)	Q	
EK1Q4189H	E-304	013	Div I (SV-15737)	Q	Div I (Iso Mux XIT-15701A)	Q	
EK1Q4189H	E-304	013	Div I (SV-15767)	Q	Div I (Iso Mux XIT-15701A)	Q	
EK1Q4189J	E-304	013	Div I (SV-15737)	Q	Div I (Iso Mux XIT-15701A)	Q	
EK1Q4189J	E-304	013	Div I (SV-15740A)	Q	Div I (Iso Mux XIT-15701A)	Q	
EK1Q4189J	E-304	013	Div I (SV-15742A)	Q	Div I (Iso Mux XIT-15701A)	Q	
EK1Q4235E	E-304	016	Div I (AR-15745A)	Q	Div I (Iso Mux XIT-15701A)	Q	
EK1V2618D	E-304	004	Div I (HV-18782A1)	Q	Div I (Iso Mux XIT-15701A)	Q	
EK1V2618D	E-304	004	Div I (HV-18792B2)	Q	Div I (Iso Mux XIT-15701A)	Q	
EK1V2618D	E-304	004	Div I (HV-18792B1)	Q	Div I (Iso Mux XIT-15701A)	Q	
EK1V2618D	E-304	004	Div I (HV-18792A1)	Q	Div I (Iso Mux XIT-15701A)	Q	

R1

Q Loads in Contact with PI-E51-1R601, 1R602, 1R603, 1R604, SI-15001A

CABLES	DWG	SH	FROM	SEPGR(FRM)	TO	SEPGR(T0)	ISOLATED
EK1V2618D	E-304	004	Div I (HV-18782B2)	Q	Div I (Iso Mux XIT-15701A)	Q	
EK1V2618D	E-304	004	Div I (HV-18782A2)	Q	Div I (Iso Mux XIT-15701A)	Q	
EK1V2618D	E-304	004	Div I (HV-18722A2)	Q	Div I (Iso Mux XIT-15701A)	Q	
EK1V2618D	E-304	004	Div I (HV-18782B1)	Q	Div I (Iso Mux XIT-15701A)	Q	
EK1V2618E	E-304	002	Div I (HV-18781A2)	Q	Div I (Iso Mux XIT-15701A)	Q	
EK1V2618E	E-304	002	Div I (HV-18781A1)	Q	Div I (Iso Mux XIT-15701A)	Q	
EK1V2618F	E-304	002	Div I (HV-18791A2)	Q	Div I (Iso Mux XIT-15701A)	Q	
EK1V2618F	E-304	002	Div I (HV-18791A1)	Q	Div I (Iso Mux XIT-15701A)	Q	
EK1Y0013L	E-064	016	Div I (1Y236-21)	Q	Div I (XV-C41-1F004A)	Q	R1
EM0I1101D	J-411	002	Div I (PT-01107A)	Q	Div I (PI-01107A)	Q	
EM0I1101E	J-411	002	Div I (FT-01109A)	Q	Div I (FY-01109A1)	Q	
EM0I1104F	J-411	005	Div I (TE-01106A)	Q	Div I (TT-01106A)	Q	
EM1E51014	M1-E51-90	006	Div I (FT-E51-1N003)	Q	Div I (FY-E51-1K601)	Q	
EM1E51014	M1-E51-90	006	Div I (PT-E51-1N004,5,7,8)	Q	PI-E51-1R601,2,3,4	Non Class 1E	
EM1I1211C	J-451	015	Div I (TE-E11-1N027A (RTD))	Q	Div I (TT-15127A)	Q	
EM1I1211D	J-451	015	Div I (TT-15127A)	Q	Div I (TI-15127A)	Q	
EM1I2603C	J-426	003	Div I (PY-12644A)	Q	Div I (PT-12644)	Q	
EM1I2603D	J-426	003	Div I (PY-12644)	Q	Div I (PT-12644)	Q	
EM1I4202D	J-442	001	Div I (LT-14201A)	Q	Div I (LY-14201A)	Q	

Q Loads in Contact with PI-E51-1R601, 1R602, 1R603, 1R604, SI-15001A

CABLES	DWG	SH	FROM	SEPGR(FRM)	TO	SEPGR(TO)	ISOLATED
EM1I4202E	J-442	001	Div I (LT-14203A)	Q	Div I (LY-14203A)	Q	
EM1I4202H	J-442	001	Div I (LT-14203A)	Q	Div I (LI-14203A)	Q	
EM1I4202J	J-442	001	Div I (LT-14202A)	Q	Div I (LR-14202)	Q	
EM1I4202K	J-442	001	Div I (LT-14201A,2A,3A)	Q	Div I (Iso Mux XIT-15701B)	Q	
EM1I4202L	J-442	001	Div I (LT-14202A)	Q	Div I (LY-14202A)	Q	
EM1I4202M	J-442	001	Div I (PT-14201A)	Q	Divi I (1C651)	Q	
EM1I4202N	J-442	001	Div I (LT-14203A)	Q	Div I (LI-14201A1)	Q	
EM1I5101D	J-470	002	Div I (FT-15120A)	Q	Div I (FY-15120A)	Q	
EM1I5101E	J-470	002	Div I (FT-15121A)	Q	Div I (FY-15121A)	Q	R1
EM1I5101F	J-470	002	Div I (FY-15120A)	Q	Div I (FI-15120A)	Q	
EM1I5701C	J-457	002	Div I (LT-15776A)	Q	Div I (Iso Mux XIT-15701A)	Q	
EM1I5705C	J-457	003	Div I (PT-15710A)	Q	Div I (PY-15710A)	Q	
EM1I5705E	J-457	003	Div I (PT-15709A)	Q	Div I (PY-15709A)	Q	
EM1I5705H	J-457	003	Div I (PT-15729A)	Q	Div I (PY-15729A)	Q	
EM1I5707A	J-457	003	Div I (PT-15729A)	Q	Div I (PR-15710A)	Q	
EM1I5714G	J-457	007	Div I (TE-15790A)	Q	Divi I (TT-15790A)	Q	
EM1I5714H	J-457	007	Div I (TE-15790A)	Q	NONE (SPARE)		
EM1I5714J	J-457	007	Div I (TE-15799A)	Q	Div I (TT-15799A)	Q	
EM1I5714K	J-457	007	Div I (TE-15799A)	Q	NONE (SPARE)		

Q Loads in Contact with PI-E51-1R601, 1R602, 1R603, 1R604, SI-15001A

CABLES	DWG	SH	FROM	SEPGR(FRM)	TO	SEPGR(TO)	ISOLATED
EM1I9801C	J-498	002	Div I (FT-E51-1N003)	Q	Div I (FY-14903A)	Q	
EM1I9801D	J-498	002	Div I (RCIC EGM Control)	Q	Div I (SY-15001B))	Q	
EM1I9801E	J-498	002	Div I (LITS-1N026B)	Q	Div I (LI-14262)	Q	
EM1I9801F	J-498	002	Div I (PT-14262)	Q	Div I (PI-14262)	Q	
EM1J25301	J-457	002	Div I (LT-15775A)	Q	Div I (LR-15776A)	Q	
EM1J45101	J-457	002	Div I (LSL-15775A)	Q	Div I (LI-15775A)	Q	
EM1J45102	J-457	002	Div I (LT-15775A,6A)	Q	Div I (LR-15775A)	Q	
EM1J45102	J-457	002	Div I (PMA1 Power Supply)	Q	Div I (LR-15775A)	Q	R1
EM1J45102	J-457	003	Div I (PT-15709A,10A)	Q	Div I (PR-15710A)	Q	
EM1J45102	J-457	007	Div I (TT-15790A)	Q	Div I (TR-15790A1)	Q	
EM1PM1302	M1-E11-66	010	Div I (FY-E11-1K600A)	Q	Div I (FI-E11-1R603A)	Q	
EM1PM1302	M1-E11-66	010	Div I (PT-E11-1N026A)	Q	PI-E11-1R606A1	Non Class 1E	
EM1PQ1302	M1-E51-90	006	Div I (FY-14989 Isolation Device))	Q	Div I (FY-E51-1K601)	Q	
EM1PQ1302	M1-E51-90	006	Div I (PT-E51-1N004,5,7,8)	Q	PI-E51-1R601,2,3,4	Non Class 1E	
EM1Q0043B	J-457	012	Div I (RE-15720A)	Q	Div I (RITS-15720A)	Q	
EM1Q0043C	J-457	012	Div I (RE-15720A)	Q	Div I (RITS-5720A)	Q	
EM1Q0043G	J-457	012	Div I (RY-15721A)	Q	Div I (RR-15720A)	Q	
EM1Q0045G	J-457	015	Div I (NT-15725A)	Q	Div.I (NIT-15725A)	Q	
EM1Q0823C	E-155	008	Div I (ES-E21-1K600A)	Q	Div I (FT-E21-1N003A)	Q	

Q Loads in Contact with PI-E51-1R601, 1R602, 1R603, 1R604, SI-15001A

CABLES	DWG	SH	FROM	SEPGR(FRM)	TO	SEPGR(TO)	ISOLATED
EM1Q0823D	E-155	008	Div I (ES-E21-1K600A)	Q	Div I (PT-E21-1N001A)	Q	
EM1Q0836D	E-304	018	Div I (PT-E21-1N001A)	Q	Div I (Iso Mux XIT-15701A)	Q	
EM1Q0836D	E-304	018	Div I (FT-E21-1N003A)	Q	Div I (Iso Mux XIT-15701A)	Q	
EM1Q0836F	E-304	019	LITS-B21-1N026B (Mech Sw See Ap	Q	Div I (Iso Mux XIT-15701A)	Q	
EM1Q1319C	J-449	002	Div I (FT-E51-1N003)	Q	Div I (FY-E51-1K601)	Q	
EM1Q1319D	J-449	002	Div I (FC-E51-1R600)	Q	Div I (Ramp/Signal Converter)	Q	
EM1Q1319E	J-449	002	Div I (EGM CTL E51-C002)	Q	SI-15001A	Non Class 1E	
EM1Q1319F	J-449	002	Div I (FC-E51-1R600)	Q	Div I (Ramp/Signal Converter)	Q	
EM1Q1320C	E-154	018	Div I (ES-E51-1K600)	Q	Div I (RCIC Transmitters)	Q	
EM1Q3066C	E-153	035	Div I (ES-E11-1K603A)	Q	Div I (PT-E11-1N026A)	Q	R1
EM1Q3066E	E-153	035	Div I (ES-E11-1K603A)	Q	Div I (PT-E11-1N015A)	Q	
EM1Q3066F	E-153	035	Div I (ES-E11-1K603A)	Q	Div I (PT-E11-1N007A)	Q	
EM1Q4189A	E-304	018	Div I (PT-15729A)	Q	Div I (Iso Mux XIT-15701A)	Q	
EM1Q4189K	E-304	017	Div I (TT-15799A)	Q	Div I (Iso Mux XIT-15701A)	Q	
EM1Q4189K	E-304	017	Div I (TT-15790A)	Q	Div I (Iso Mux XIT-15701A)	Q	
EM1Q4189L	E-304	017	Div I (PT-15709A)	Q	Div I (Iso Mux XIT-15701A)	Q	
EM1Q4189L	E-304	017	Div I (PT-15710A)	Q	Div I (Iso Mux XIT-15701A)	Q	
EM1Q4189M	E-304	017	Div I (LT-15775A)	Q	Div I (Iso Mux XIT-15701A)	Q	
EM1Q4189M	E-304	017	Div I (LT-15776A)	Q	Div I (Iso Mux XIT-15701A)	Q	

Q Loads in Contact with PI-E51-1R601, 1R602, 1R603, 1R604, SI-15001A

CABLES	DWG	SH	FROM	SEPGR(FRM)	TO	SEPGR(T0)	ISOLATED
EM1Q4191C	E-187	001	Div I (1B216)	Q	Divi I (1E440A)	Q	
EM1Q4191D	E-187	001	Div I (1B216)	Q	Divi I (1E440A)	Q	
EM1Q4193C	E-187	001	Div I (1B236)	Q	Divi I (1E440C)	Q	
EM1Q4193D	E-187	001	Div I (1B236)	Q	Divi I (1E440C)	Q	
EM1Q4235E	E-304	016	Div I (AR-15745A)	Q	Div I (Iso Mux XIT-15701A)	Q	
EM1Q4235E	E-304	016	Div I (AR-15746A)	Q	Div I (Iso Mux XIT-15701A)	Q	
EM1Q4235F	E-304	016	Div I (TX-15751)	Q	Div I (Iso Mux XIT-15701A)	Q	
EM1Q4237D	E-304	019	Div I (RY-15721A)	Q	Div I (Iso Mux XIT-15701A)	Q	
EM1Q6525C	E-189	005	Div I (1C645)	Q	Divi I (PT-E32-1N055,6,9)	Q	
EM1Q6525D	E-189	005	Div I (1C645)	Q	Divi I (PT-E32-1N058)	Q	R1
EM1S1600F	E-267	001	Div I (1C693)	Q	Divi I (1C292A)	Q	
EM1S1600J	E-267	001	Div I (1C693)	Q	Divi I (1C292A)	Q	
EM1S1602C	E-267	002	Div I (1C693)	Q	Div I (1C226A)	Q	
EM1S1729C	E-267	002	Div I (1C201A)	Q	Div I (1C690A)	Q	
JM1Q0707D	J-444	004	Ch A Aff (Thermocouple)	Q	TRS-G33-1N604	Non Class 1E	
JM1Q0707E	J-444	004	Ch A Aff (Thermocouple)	Q	TRS-G33-1N604	Non Class 1E	
JM1Q0707F	J-444	004	Ch A Aff (Thermocouple)	Q	TRS-G33-1N604	Non Class 1E	
JM1Q0707G	J-444	004	Ch A Aff (Thermocouple)	Q	TRS-G33-1N604	Non Class 1E	
JM1Q0707H	J-444	004	Ch A Aff (Thermocouple)	Q	TRS-G33-1N604	Non Class 1E	

Q Loads in Contact with PI-E51-1R601, 1R602, 1R603, 1R604, SI-15001A

CABLES	DWG	SH	FROM	SEPGR(FRM)	TO	SEPGR(TO)	ISOLATED
JM1Q0707S	J-444	004	Ch A Aff (Thermocouple)	Q	TRS-G33-1N604	Non Class 1E	
JM1Q0707T	J-444	004	Ch A Aff (Thermocouple)	Q	TRS-G33-1N604	Non Class 1E	
JM1Q0708C	J-444	005	Ch A Aff (Thermocouple)	Q	TDRS-G33-1N605	Non Class 1E	
JM1Q0708D	J-444	005	Ch A Aff (Thermocouple)	Q	TDRS-G33-1N605	Non Class 1E	
JM1Q0708E	J-444	005	Ch A Aff (Thermocouple)	Q	TDRS-G33-1N605	Non Class 1E	
JM1Q0708F	J-444	005	Ch A Aff (Thermocouple)	Q	TDRS-G33-1N605	Non Class 1E	
JM1Q0708G	J-444	005	Ch A Aff (Thermocouple)	Q	TDRS-G33-1N605	Non Class 1E	
JM1Q0708H	J-444	005	Ch A Aff (Thermocouple)	Q	TDRS-G33-1N605	Non Class 1E	
JM1Q0708J	J-444	005	Ch A Aff (Thermocouple)	Q	TDRS-G33-1N605	Non Class 1E	
JM1Q0708K	J-444	005	Ch A Aff (Thermocouple)	Q	TDRS-G33-1N605	Non Class 1E	
JM1Q0708L	J-444	005	Ch A Aff (Thermocouple)	Q	TDRS-G33-1N605	Non Class 1E	
NM1PR4101	M1-G33-153	004	FT-G33-1N037 (Press Boundary)	Q	FI-G33-1R610	Non Class 1E	
PK1Q0839G	E-064	032	Div I Affiliated (1Y688)	Q	1C699A	Non Class 1E	YES
PM1Q0051C	E-176	001	Div I Aff (1D672)	Q	Process Rad Mom	Non Class 1E	YES
PM1Q0051D	E-176	001	Div I Aff (1D672)	Q	Process Rad Mom	Non Class 1E	YES
PM1Q0051E	E-176	001	Div I Aff (1D672)	Q	Process Rad Mom	Non Class 1E	YES

R)

Q Loads in Contact with FI-E11-1R607

CABLES	DWG	SH	FROM	SEPGR(FRM)	TO	SEPGR(TO)	ISOLATED
EK1E11013	M1-E11-66	004	Div I (1D614)	Q	Div I (PS-E11-1N021E,G)	Q	
EK1E11013	M1-E11-66	004	Div I (1D614)	Q	Div I (PS-E11-1N011A)	Q	
EK1E11013	M1-E11-66	005	Div I (1D614)	Q	Div I (52AX-20201)	Q	
EK1P8F201	M1-B31-275	014	Div I (1B219)	Q	Div I (K99A, K37A-E11A)	Q	
EK1P8F201	M1-B31-275	016	Div I (1B219)	Q	Div I (K99A, K37A-E11A)	Q	
NM1I4202L	J-442	002	LY-14202A (Isolation Device)	Q	Computer Input	Non Class 1E	YES
NM1I4801C	J-448	002	R.G. 1.97 Cat 2 (FT-14806 See App I	Q	R.G. 1.97 Cat 2 (LI/FI 14806)	Q	
NM1I4801D	J-448	001	R.G. 1.97 Cat 2 (FE-14806 See App I	Q	R.G. 1.97 Cat 2 (FT-14806)	Q	
NM1I4801E	J-448	001	R.G. 1.97 Cat 2 (FE-14806 See App I	Q	R.G. 1.97 Cat 2 (FT-14806)	Q	
NM1I4801F	J-448	001	XY-14806 (Isolation Device)	Q	Computer Input NXF01	Non Class 1E	YES
NM1P11901	M1-B21-128	003	LT-B21-1N027 (Pressure Boundary)	Q	LI-B21-1R605	Non Class 1E	
NM1P1F101	M1-B21-128	003	LITS-B21-1N026D (Mech Sw See Ap	Q	LI-B21-1R604	Non Class 1E	
NM1P91601	M1-C12-110	016	APRM Trip Unit Contacts	Q	Isolator Card Z1	Non Class 1E	Contact to Coil
NM1P91603	M1-C12-110	015	APRM Trip Unit Contacts	Q	Isolator Card Z1	Non Class 1E	Contact to Coil
NM1PC1301	J-448	003	R.G. 1.97 Cat 2 (LI/FI-14806 See App	Q	LT-C41-1N001	Non Class 1E	
NM1PD4206	M1-C51-20	006	IRM Range Sw E	Q	C51-1K601E (IRM Mon)	Q	
NM1PD4213	M1-C51-20	006	IRM Range Sw C	Q	C51-1K601C (IRM Mon)	Q	
NM1PD4217	M1-C51-20	006	IRM Range Sw A	Q	C51-1K601A (IRM Mon)	Q	
NM1PDF206	M1-C51-20	007	IRM Range Switch B	Q	IRM-C51-1K601B	Q	

R1

Q Loads in Contact with FI-E11-1R607

CABLES	DWG	SH	FROM	SEPGR(FRM)	TO	SEPGR(TO)	ISOLATED
NM1PDF207	M1-C51-20	007	IRM Range Switch F	Q	IRM-C51-1K601F	Q	
NM1PDF212	M1-C51-20	007	IRM Range Switch D	Q	IRM-C51-1K601D	Q	
NM1PDF213	M1-C51-20	007	IRM Range Switch H	Q	IRM-C51-1K601H	Q	
NM1PK0602	J-475	001	RISHH-D12-1K609A (See App G for	Q	RR-D12-1R605	Non Class 1E	
NM1PK0602	J-475	002	RISHH-D12-1K615A (See App G for	Q	RR-D12-1R607	Non Class 1E	
NM1PK0602	J-475	003	RISHH-D12-1K616A (See App G for	Q	RR-D12-1R608	Non Class 1E	
NM1PK0602	J-478	001	RISHH-D12-0K617A (See App G for	Q	RR-D12-0R609	Non Class 1E	
NM1PK0602	J-478	002	RISHH-D12-0K618A (See App G for	Q	RR-D12-0R610	Non Class 1E	
NM1PK0603	J-439	009	RY-13962C (Isoaltion Device)	Q	RR-D12-1R603	Non Class 1E	YES
NM1PM1307	J-451	009	FT-E11-1N013 (Press Boundary)	Q	FI-E11-1R607	Non Class 1E	
NM1PPF101	J-444	009	FY-G33-1K605 (See App F for eval.)	Q	FI-G33-1R602	Non Class 1E	
NM1PPF101	J-444	009	FY-G33-1K605 (See App F for eval.)	Q	FI-G33-1R602	Non Class 1E	
NM1PPF101	J-444	009	FY-G33-1K602 (See App F for eval.)	Q	FI-G33-1R609	Non Class 1E	
NM1PR4101	M1-G33-153	004	FT-G33-1N037 (Press Boundary)	Q	FI-G33-1R610	Non Class 1E	
NM1PR7N01	M1-G33-153	004	FY-14476 (Isolation Device)	Q	Computer Analog Input	Non Class 1E	YES
NM1Q0045L	J-457	015	NIT-15725A (Isolation Device)	Q	Computer Input NM118	Non Class 1E	YES
NM1Q0045L	J-457	015	NIT-15725A (Isolation Device)	Q	Computer Input NM602	Non Class 1E	YES
NM1Q0045M	J-457	015	NIT-15725A (Isolation Device)	Q	SPDS Input NM6002Z	Non Class 1E	YES
NM1Q0048L	J-457	016	NIT-15725B (Isolation Device)	Q	Computer Input	Non Class 1E	YES

R1

Q Loads in Contact with FI-E11-1R607

CABLES	DWG	SH	FROM	SEPGR(FRM)	TO	SEPGR(TO)	ISOLATED
NM1Q0048L	J-457	016	NIT-15725B (Isolation Device)	Q	Computer Input NM601	Non Class 1E	YES
NM1Q0048L	J-457	016	NIT-15725B (Isolation Device)	Q	Computer Input NM117	Non Class 1E	YES
NM1Q0048M	J-457	016	NIT-15725B (Isolation Device)	Q	Computer Input	Non Class 1E	YES
NM1Q0048M	J-457	016	NIT-15725B (Isolation Device)	Q	SPDS Input NM6001Z	Non Class 1E	YES
NM1Q1217L	E-304	017	XY-14201F (Isolation Device)	Q	SPDS NM5006Z	Non Class 1E	YES
NM1Q1217M	E-304	017	XY-14201A (Isolation Device)	Q	SPDS NM5001Z	Non Class 1E	YES
NM1Q1217M	E-304	017	XY-14201B (Isolation Device)	Q	SPDS NM5002Z	Non Class 1E	YES
NM1Q1217N	E-304	017	XY-14201D (Isolation Device)	Q	SPDS NM5004Z	Non Class 1E	YES
NM1Q1217P	E-304	017	XY-14201C (Isolation Device)	Q	SPDS NM5003Z	Non Class 1E	YES
NM1Q1217Q	E-304	017	XY-14201E (Isolation Device)	Q	SPDS NM5005Z	Non Class 1E	YES
NM1Q3071C	J-451	017	TE-E11-1N004A (Seismic Only)	Q	TRS-E11-1R601	Non Class 1E	
NM1Q3071E	J-451	017	TE-E11-1N017A (Seismic Only)	Q	TRS-E11-1R601	Non Class 1E	
NM1Q3071F	J-451	017	TE-E11-1N017C (Seismic Only)	Q	TRS-E11-1R601	Non Class 1E	
NM1Q3071G	J-451	017	TE-E11-1N027A (Seismic Only)	Q	TRS-E11-1R601	Non Class 1E	
NM1Q3071H	J-451	017	TE-E11-1N032A (Seismic Only)	Q	TRS-E11-1R601	Non Class 1E	
NM1Q3071J	J-451	017	TE-E11-1N004B (Seismic Only)	Q	TRS-E11-1R601	Non Class 1E	
NM1Q3071K	J-451	017	TE-E11-1N005B (Seismic Only)	Q	Computer Input AET06	Non Class 1E	
NM1Q3071L	J-451	017	TE-E11-1N017B (Seismic Only)	Q	TRS-E11-1R601	Non Class 1E	
NM1Q3071M	J-451	017	TE-E11-1N017D (Seismic Only)	Q	TRS-E11-1R601	Non Class 1E	

R1

Q Loads in Contact with FI-E11-1R607

CABLES	DWG	SH	FROM	SEPGR(FRM)	TO	SEPGR(TO)	ISOLATED
NM1Q3071N	J-451	017	TE-E11-1N027B (Seismic Only)	Q	TRS-E11-1R601	Non Class 1E	
NM1Q3071P	J-451	017	TE-E11-1N032B (Seismic Only)	Q	TRS-E11-1R601	Non Class 1E	
NM2M0110C	J-411	003	XY-01109B1 (Isolation Device)	Q	Computer Input	Non Class 1E	YES

R1

Q Loads in Contact with PI-C41-1R600

CABLES	DWG	SH	FROM	SEPGR(FRM)	TO	SEPGR(TO)	ISOLATED
NK1C41004	J-448	003	PT-C41-1N004 (Press Boundary)	Q	PI-C41-1R600	Non Class 1E	
NM1E11001	J-451	009	FT-E11-1N013 (Press Boundary)	Q	FI-E11-1R607	Non Class 1E	
NM1G33002	J-444	001	FT-G33-1N037 (Press Boundary)	Q	FI-G33-1R610	Non Class 1E	

R1

Q Loads in Contact with PI-C41-1R600

CABLES	DWG	SH	FROM	SEPGR(FRM)	TO	SEPGR(TO)	ISOLATED
NM0I1201C	J-412	002	Div I (1A20303-52a)	Q	PME1 24 V Pwr Supply	Non Class 1E	
NM0I1201F	J-412	002	Div I (1A20108-52a)	Q	PME1 24 V Pwr Supply	Non Class 1E	
NM0I1201G	J-412	002	Div I (2A20108-52a)	Q	PME1 24 V Pwr Supply	Non Class 1E	
NM0I1202F	J-412	002	Div II (1A20202-52a)	Q	PME2 24 V Pwr Supply	Non Class 1E	
NM0I1202G	J-412	002	Div II (2A20208-52a)	Q	PME2 24 V Pwr Supply	Non Class 1E	
NM0S0400C	E-146	001	Ch A (AT-20108 (Transducer))	Q	Computer Input AEI01	Non Class 1E	
NM0S0400D	E-146	001	Ch A (AT-20108 (Transducer))	Q	Computer Input AEI01	Non Class 1E	
NM0S0401D	E-146	003	Ch B (AT-20208 (Transducer))	Q	Computer Input AEI02	Non Class 1E	
NM1A0401C	E-023	001	Ch A (AT-20101 (Transducer))	Q	XI-00022A	Non Class 1E	
NM1A0401C	E-023	001	Ch A (AT-20101 (Transducer))	Q	Computer Input ETI41 (Unit 2)	Non Class 1E	
NM1A0401C	E-023	001	Ch A (AT-20101 (Transducer))	Q	Computer Input ETI41	Non Class 1E	
NM1A0401D	E-023	001	Ch A (VT-20101 (Transducer))	Q	Computer Input ETE41	Non Class 1E	
NM1A0401D	E-023	001	Ch A (AT-20104 (Transducer))	Q	XI-00018A	Non Class 1E	
NM1A0401D	E-023	001	Ch A (VT-20101 (Transducer))	Q	Computer Input ETE41 (Unit 2)	Non Class 1E	
NM1A0401E	E-023	001	Ch A (AT-20104 (Transducer))	Q	Computer Input EGI01 (Unit 2)	Non Class 1E	
NM1A0401E	E-023	001	Ch A (AT-20104 (Transducer))	Q	Computer Input EGI01	Non Class 1E	
NM1A0401F	E-023	001	Ch A (VT-20104 (Transducer))	Q	Computer Input EBE41	Non Class 1E	
NM1A0401F	E-023	001	Ch A (VT-20104 (Transducer))	Q	Computer Input EBE41 (Unit 2)	Non Class 1E	
NM1A0401G	E-023	001	Ch A (AT-20109 (Transducer))	Q	Computer Input	Non Class 1E	

R1.

Q Loads in Contact with PI-C41-1R600

CABLES	DWG	SH	FROM	SEPGR(FRM)	TO	SEPGR(TO)	ISOLATED
NM1A0401H	E-023	001	Ch A (VT-20109 (Transducer))	Q	Computer Input	Non Class 1E	
NM1C0328C	E-135	015	Ch B (AT-20210 (Transducer))	Q	Computer Input TNI01	Non Class 1E	
NM1F0200F	E-179	001	PDT-C32-1N017 (Press Boundary)	Q	LR-C32-1R608	Non Class 1E	
NM1F0200F	E-179	001	PDT-C32-1N004B (Press Boundary)	Q	Computer Input NFL02	Non Class 1E	
NM1F0200H	E-179	001	PT-C32-1N008 (Press Boundary)	Q	PR-C32-1R609	Non Class 1E	
NM1F0200N	E-179	001	PDT-C32-1N004C (Press Boundary)	Q	LSH-C32-1K624C	Non Class 1E	
NM1I4801D	J-448	001	R.G. 1.97 Cat 2 (FE-14806 See App I for Eval.)	Q	R.G. 1.97 Cat 2 (FT-14806)	Q	
NM1I4801E	J-448	001	R.G. 1.97 Cat 2 (FE-14806 See App I for Eval.)	Q	R.G. 1.97 Cat 2 (FT-14806)	Q	
NM1Q0206C	J-448	003	PT-C41-1N004 (Press Boundary)	Q	PI-C41-1N004	Non Class 1E	R1
NM1Q0250C	J-442	010	FT--B21-1N033D (Press Boundary)	Q	FY-B21-1K605D	Non Class 1E	
NM1Q0250D	J-442	010	FT-B21-1N033B (Press Boundary)	Q	FY-B21-1K605B	Non Class 1E	
NM1Q0250D	J-442	010	PDT-B21-1N032 (Press Boundary)	Q	XR-B21-1R613	Non Class 1E	
NM1Q0250E	J-442	006	FT-B21-1N034D (Press Boundary)	Q	PDI-B21-1R608D	Non Class 1E	
NM1Q0250E	J-442	006	FT-B21-1N034H (Press Boundary)	Q	PDI-B21-1R608H	Non Class 1E	
NM1Q0250E	J-442	006	FT-B21-1N034F (Press Boundary)	Q	PDI-B21-1R608F	Non Class 1E	
NM1Q0250E	J-442	006	FT-B21-1N034B (Press Boundary)	Q	PDI-B21-1R608B	Non Class 1E	
NM1Q0250F	J-442	005	FT-B21-1N034W (Press Boundary)	Q	PDI-B21-1R608W	Non Class 1E	
NM1Q0250F	J-442	005	FT-B21-1N034U (Press Boundary)	Q	PDI-B21-1R608U	Non Class 1E	
NM1Q0250F	J-442	007	FT-B21-1N034M (Press Boundary)	Q	PDI-B21-1R608M	Non Class 1E	

Q Loads in Contact with PI-C41-1R600

CABLES	DWG	SH	FROM	SEPGR(FRM)	TO	SEPGR(TO)	ISOLATED
NM1Q0250F	J-442	007	FT-B21-1N034P (Press Boundary)	Q	PDI-B21-1R608P	Non Class 1E	
NM1Q0250F	J-442	007	FT-B21-1N034S (Press Boundary)	Q	PDI-B21-1R608S	Non Class 1E	
NM1Q0300C	E-169	001	Ch A (AT-20107 (Transducer))	Q	Computer Input NDI01	Non Class 1E	
NM1Q0300D	E-169	001	Ch A (AT-20107 (Transducer))	Q	Computer Input NDI01	Non Class 1E	
NM1Q0614P	J-444	010	FT-G33-1N037 (Press Boundary)	Q	FI-G33-1R610	Non Class 1E	
NM1Q0801C	E-156	001	Ch A (AT-20105 (Transducer))	Q	Computer Input NSI01	Non Class 1E	
NM1Q0801D	E-156	001	Ch A (AT-20105 (Transducer))	Q	Computer Input NSI01	Non Class 1E	
NM1Q0802D	E-156	002	Ch B (AT-20205 (Transducer))	Q	Computer Input NSI01	Non Class 1E	
NM1Q1604C	J-442	016	LITS-B21-1N026D (Mech Sw See App C for Eval.)	Q	LI-B21-1R604	Non Class 1E	
NM1Q3000C	E-153	001	Ch A (AT-20102 (Transducer))	Q	Computer Input NHI01	Non Class 1E	
NM1Q3000D	E-153	001	Ch A (AT-20102 (Trnasducer))	Q	Computer Input NHI01	Non Class 1E	
NM1Q3001D	E-153	003	Ch B (AT-20202 (Trnasducer))	Q	Computer Input NHI02	Non Class 1E	
NM1Q3066J	E-153	035	FT-E11-1N013 (Press Boundary)	Q	Computer Input NHF03	Non Class 1E	
NM1Q3066J	E-153	035	FT-E11-1N013 (Press Boundary)	Q	FI-E11-1R607	Non Class 1E	
NM1V1600C	E-213	001	Ch A (AT-20110 (Transducer))	Q	Computer Input MVI03	Non Class 1E	
NM1V1600D	E-213	001	Ch A (AT-20110 (Transducer))	Q	Computer Input MVI03	Non Class 1E	
NM1V1601D	E-213	002	Ch B (AT-20211 (Transducer))	Q	Computer Input MVI04	Non Class 1E	
NM1V2600C	E-216	001	Ch A (AT-20103 (Transducer))	Q	Computer Input MVI01	Non Class 1E	
NM1V2600D	E-216	001	Ch A (AT-20108 (Transducer))	Q	Computer Input MVI01	Non Class 1E	

R1

Q Loads in Contact with PI-C41-1R600

CABLES	DWG	SH	FROM	SEPGR(FRM)	TO	SEPGR(TO)	ISOLATED
NM1V2601D	E-216	002	Ch B (AT-20208 (Transducer))	Q	Computer Input MVI02	Non Class 1E	
NM2C0328C	E-135	039	Ch C (AT-20309 (Transducer))	Q	Computer Input TNI51	Non Class 1E	

R1

Q Loads in Contact with LI-B21-1R604

CABLES	DWG	SH	FROM	SEPGR(FRM)	TO	SEPGR(TO)	ISOLATED
NK1PD4205	M1-C51-19	018	IRM AUX UNIT (See App H for Eval	Q	NR-C51-1R603B	Non Class 1E	
NK1Q0029A	E-304	036	SVX2-157100B (Isolation Relay)	Q	SPDS-NCZ616Z	Non Class 1E	YES
NK1Q0029A	E-304	036	SVX1-157100B (Isolation Relay)	Q	SPDS-NCZ116Z	Non Class 1E	YES
NK1Q0029A	E-304	036	SVX1-157104 (Isolation Relay)	Q	SPDS-NCZ120Z	Non Class 1E	YES
NK1Q0029A	E-304	036	SVX2-1571002B (Isolation Relay)	Q	SPDS-NCZ618Z	Non Class 1E	YES
NK1Q0029A	E-304	036	SVX1-1571002A (Isolation Relay)	Q	SPDS-NCZ118Z	Non Class 1E	YES
NK1Q0029A	E-304	036	SVX1-157100A (Isolation Relay)	Q	SPDS-NCZ612Z	Non Class 1E	YES
NK1Q0029A	E-304	036	SVX1-157102A (Isolation Relay)	Q	SPDS-NCZ614Z	Non Class 1E	YES R1
NK1Q0029A	E-304	036	SVX2-157104 (Isolation Relay)	Q	SPDS-NCZ620Z	Non Class 1E	YES
NK1Q0029A	E-304	036	SVX1-157104 (Isolation Relay)	Q	SPDS-NCZ122Z	Non Class 1E	YES
NK1Q0029A	E-304	036	SVX1-157100A (Isolation Relay)	Q	SPDS-NCZ114Z	Non Class 1E	YES
NK1Q0029B	E-304	036	SVX2-157104 (Isolation Relay)	Q	SPDS-NCZ622Z	Non Class 1E	YES
NK1Q0053A	J-439	007	RY-13961C (Isolation Device)	Q	ES-G33-1K601	Non Class 1E	YES
NK1Q4243M	E-304	002A	Relay k 60 Dry Contact	Q	SPDS-NIZ002Z	Non Class 1E	Contact to Coil
NM1A0403G	E-023	001	Ch C (VT-20301 (Transducer))	Q	Computer Input ETE42	Non Class 1E	
NM1B21008	M1-B21-94	001	FT-B21-1N033C (Press Boundary)	Q	FY-B21-1K605C	Non Class 1E	
NM1B21008	M1-B21-94	001	FT-B21-1N034B (Press Boundary)	Q	PDI-B21-1R608B	Non Class 1E	
NM1B21008	M1-B21-94	001	FT-B21-1N033A (Press Boundary)	Q	FY-B21-1K605A	Non Class 1E	
NM1B21008	M1-B21-94	002	FT-B21-1N034F (Press Boundary)	Q	PDI-B21-1R608F	Non Class 1E	

Q Loads in Contact with LI-B21-1R604

CABLES	DWG	SH	FROM	SEPGR(FRM)	TO	SEPGR(TO)	ISOLATED
NM1B21008	M1-B21-94	002	FT-B21-1N034D (Press Boundary)	Q	PDI-B21-1R608D	Non Class 1E	
NM1B21008	M1-B21-94	002	FT-B21-1N034H (Press Boundary)	Q	PDI-B21-1R608H	Non Class 1E	
NM1F0203E	E-304	017	PDT-B21-1N032 (Press Boundary)	Q	SPDS NJP051Z	Non Class 1E	
NM1F0203F	E-304	017	LITS-B21-IN026D (Mech Sw See Ap	Q	SPDS NBL002Z	Non Class 1E	
NM1I4202L	J-442	002	LY-14202A (Isolation Device)	Q	Computer Input	Non Class 1E	YES
NM1I4801C	J-448	002	R.G. 1.97 Cat 2 (FT-14806 See App I	Q	R.G. 1.97 Cat 2 (LI/FI 14806	Q	
NM1P11901	M1-B21-128	003	LT-B21-1N027 (Pressure Boundary)	Q	LI-B21-1R605	Non Class 1E	
NM1P14101	M1-B21-128	003	PDT-B31-1N015B (Press Boundary)	Q	PDI-B31-1R612B	Non Class 1E	
NM1P14101	M1-B21-128	003	PDT-B31-1N015A (Press Boundary)	Q	PDI-B31-1R612A	Non Class 1E	
NM1P1F101	M1-B21-128	003	LITS-B21-1N026D (Mech Sw See Ap	Q	LI-B21-1R604	Non Class 1E	
NM1P91601	M1-C12-110	016	APRM Trip Unit Contacts	Q	Isolator Card Z1	Non Class 1E	Contact to Coil
NM1P91603	M1-C12-110	015	APRM Trip Unit Contacts	Q	Isolator Card Z1	Non Class 1E	Contact to Coil
NM1PB4102	J-406	011	PDT-C32-1N004B (Press Boundary)	Q	LI-C32-1R606B	Non Class 1E	
NM1PB4102	J-406	012	PDT-C32-1N004A (Press Boundary)	Q	LI-C32-1R606A	Non Class 1E	
NM1PB4102	J-406	024	PT-C32-1N005 (Press Boundary)	Q	PI-C32-1R605	Non Class 1E	
NM1PB4103	J-406	013	PDT-C32-1N017 (Press Boundary)	Q	LR-C32-1R608	Non Class 1E	
NM1PB4105	M1-C32-17	003	PT-C32-1N008 (Press Boundary)	Q	FR-C32-1R609	Non Class 1E	
NM1PC1301	J-448	003	R.G. 1.97 Cat 2 (LI/FI-14806 See App	Q	LT-C41-1N001	Non Class 1E	
NM1PD4206	M1-C51-20	006	IRM Range Sw E	Q	C51-1K601E (IRM Mon)	Q	

R1

Q Loads in Contact with LI-B21-1R604

CABLES	DWG	SH	FROM	SEPGR(FRM)	TO	SEPGR(TO)	ISOLATED
NM1PD4213	M1-C51-20	006	IRM Range Sw C	Q	C51-1K601C (IRM Mon)	Q	
NM1PD4217	M1-C51-20	006	IRM Range Sw A	Q	C51-1K601A (IRM Mon)	Q	
NM1PD4X01	M1-C51-20	007	C51-1K601B (IRM Mon See App H f	Q	NR-C51-1R603B	Non Class 1E	
NM1PD4X01	M1-C51-20	007	C51-1K601F (IRM Mon See App H fo	Q	NR-C51-1R603D	Non Class 1E	
NM1PD4X02	M1-C51-20	007	C51-1K601D (IRM Mon See App H f	Q	NR-C51-1R603B	Non Class 1E	
NM1PD4X02	M1-C51-20	007	C51-1K601H (IRM Mon See App H f	Q	NR-C51-1R603D	Non Class 1E	
NM1PDF206	M1-C51-20	007	IRM Range Switch B	Q	IRM-C51-1K601B	Q	
NM1PDF207	M1-C51-20	007	IRM Range Switch F	Q	IRM-C51-1K601F	Q	
NM1PDF212	M1-C51-20	007	IRM Range Switch D	Q	IRM-C51-1K601D	Q	R1
NM1PDF213	M1-C51-20	007	IRM Range Switch H	Q	IRM-C51-1K601H	Q	
NM1PE4101	M1-C51-19	022	Aux Trip Unit AR12 (See App H for	Q	NR-C51-1R603D	Non Class 1E	
NM1PE4103	M1-C51-19	018	Aux Trip Unit AR12 (See App H for	Q	NR-C51-1R603B	Non Class 1E	
NM1PE4103	M1-C51-19	018	Aux Trip Unit AR12 (See App H for	Q	NR-C51-1R603B	Non Class 1E	
NM1PE4109	M1-C51-19	012	Aux Trip Unit AR31 (See App H for	Q	NR-C51-1R603A	Non Class 1E	
NM1PE4109	M1-C51-19	014	Aux Trip Unit AR32 (See App H for	Q	NR-C51-1R603B	Non Class 1E	
NM1PE4110	M1-C51-19	016	Aux Trip Unit AR41 (See App H for	Q	NR-C51-1R603A	Non Class 1E	
NM1PE4111	M1-C51-19	020	Aux Trip Unit AR51 (See App H for	Q	NR-C51-1R603C	Non Class 1E	
NM1PE4111	M1-C51-19	033	Driver Card Z33 (See App H for Eval.	Q	NR-C51-1R603C	Non Class 1E	
NM1PE4112	M1-C51-19	033	Driver Card (See App H for Eval.)	Q	NR-C51-1R603C	Non Class 1E	

Q Loads in Contact with LI-B21-1R604

CABLES	DWG	SH	FROM	SEPGR(FRM)	TO	SEPGR(TO)	ISOLATED
NM1PK0602	J-475	001	RISHH-D12-1K609A (See App G for	Q	RR-D12-1R605	Non Class 1E	
NM1PK0602	J-475	002	RISHH-D12-1K615A (See App G for	Q	RR-D12-1R607	Non Class 1E	
NM1PK0602	J-475	003	RISHH-D12-1K616A (See App G for	Q	RR-D12-1R608	Non Class 1E	
NM1PK0602	J-478	001	RISHH-D12-0K617A (See App G for	Q	RR-D12-0R609	Non Class 1E	
NM1PK0602	J-478	002	RISHH-D12-0K618A (See App G for	Q	RR-D12-0R610	Non Class 1E	
NM1PK0603	J-439	009	RY-13962C (Isoaltion Device)	Q	RR-D12-1R603	Non Class 1E	YES
NM1PK3301	J-439	008	RY-13962B (Isoaltion Device)	Q	RR-D12-1R603	Non Class 1E	YES
NM1PK3301	J-439	010	RY-13962D (Isoaltion Device)	Q	RR-D12-1R603	Non Class 1E	YES
NM1PK3302	J-475	001	RISHH-D12-1K609A (See App G for	Q	RR-D12-1R605	Non Class 1E	
NM1PK3302	J-475	005	RISHH-D12-0K618A (See App G for	Q	RR-D12-0R610	Non Class 1E	
NM1PK3302	J-475	005	RISHH-D12-1K615B (See App G for	Q	RR-D12-1R607	Non Class 1E	
NM1PK3302	J-475	006	RISHH-D12-1K616B (See App G for	Q	RR-D12-1R608	Non Class 1E	
NM1PK3302	J-478	001	RISHH-D12-0K617A (See App G for	Q	RR-D12-0R609	Non Class 1E	
NM1PM1307	J-451	009	FT-E11-1N013 (Press Boundary)	Q	FI-E11-1R607	Non Class 1E	
NM1PPF101	J-444	009	FY-G33-1K605 (See App F for eval.)	Q	FI-G33-1R602	Non Class 1E	
NM1PPF101	J-444	009	FY-G33-1K602 (See App F for eval.)	Q	FI-G33-1R609	Non Class 1E	
NM1PPF101	J-444	009	FY-G33-1K605 (See App F for eval.)	Q	FI-G33-1R602	Non Class 1E	
NM1PQ4101	M1-C51-20	006	C51-1K601A (IRM Mon See App H f	Q	NR-C51-1R603A	Non Class 1E	
NM1PQ4101	M1-C51-20	006	C51-1K601E (IRM Mon See App H f	Q	NR-C51-1R603C	Non Class 1E	

R1

Q Loads in Contact with LI-B21-1R604

CABLES	DWG	SH	FROM	SEPGR(FRM)	TO	SEPGR(TO)	ISOLATED
NM1PQ4102	M1-C51-20	006	C51-1K601C (IRM Mon See App H f	Q	NR-C51-1R603A	Non Class 1E	
NM1PQ4102	M1-C51-20	006	C51-1K601G (IRM Mon See App H f	Q	NR-C51-1R603C	Non Class 1E	
NM1PR4101	M1-G33-153	004	FT-G33-1N037 (Press Boundary)	Q	FI-G33-1R610	Non Class 1E	
NM1PR7N01	M1-G33-153	004	FY-14476 (Isolation Device)	Q	Computer Analog Input	Non Class 1E	YES
NM1Q0045L	J-457	015	NIT-15725A (Isolation Device)	Q	Computer Input NM118	Non Class 1E	YES
NM1Q0045L	J-457	015	NIT-15725A (Isolation Device)	Q	Computer Input NM602	Non Class 1E	YES
NM1Q0045M	J-457	015	NIT-15725A (Isolation Device)	Q	SPDS Input NM6002Z	Non Class 1E	YES
NM1Q0048L	J-457	016	NIT-15725B (Isolation Device)	Q	Computer Input NM601	Non Class 1E	YES
NM1Q0048L	J-457	016	NIT-15725B (Isolation Device)	Q	Computer Input	Non Class 1E	YES
NM1Q0048L	J-457	016	NIT-15725B (Isolation Device)	Q	Computer Input NM117	Non Class 1E	YES
NM1Q0048M	J-457	016	NIT-15725B (Isolation Device)	Q	SPDS Input NM6001Z	Non Class 1E	YES
NM1Q0048M	J-457	016	NIT-15725B (Isolation Device)	Q	Computer Input	Non Class 1E	YES
NM1Q1217L	E-304	017	XY-14201F (Isolation Device)	Q	SPDS NM5006Z	Non Class 1E	YES
NM1Q1217M	E-304	017	XY-14201B (Isolation Device)	Q	SPDS NM5002Z	Non Class 1E	YES
NM1Q1217M	E-304	017	XY-14201A (Isolation Device)	Q	SPDS NM5001Z	Non Class 1E	YES
NM1Q1217N	E-304	017	XY-14201D (Isolation Device)	Q	SPDS NM5004Z	Non Class 1E	YES
NM1Q1217P	E-304	017	XY-14201C (Isolation Device)	Q	SPDS NM5003Z	Non Class 1E	YES
NM1Q1217Q	E-304	017	XY-14201E (Isolation Device)	Q	SPDS NM5005Z	Non Class 1E	YES
NM2M0110C	J-411	003	XY-01109B1 (Isolation Device)	Q	Computer Input	Non Class 1E	YES

R1

Q Loads in Contact with CISH-E11-1R001A

CABLES	DWG	SH	FROM	SEPGR(FRM)	TO	SEPGR(TO)	ISOLATED
NM1Q3070C	J-451	18	CE-E11-1N001A (Seismic Only)	Q	CISH-E11-1R001A	Non Class 1E	
NM1Q3071F	J-451	017	TE-E11-1N017C (Seismic Only)	Q	TRS-E11-1R601	Non Class 1E	

R1

Q Loads in Contact with CISH-E11-1R001B

CABLES	DWG	SH	FROM	SEPGR(FRM)	TO	SEPGR(T0)	ISOLATED
NM1M0104A	E-302	003	TE-E11-1N004A (Press Boundary)	Q	Computer Input NHT01	Non Class 1E	
NM1M0104B	E-302	003	TE-E11-1N004B (Press Boundary)	Q	Computer Input NHT02	Non Class 1E	
NM1Q3070D	J-451	18	CE-E11-1N001B (Seismic Only)	Q	CISH-E11-1R001B	Non Class 1E	
NM1Q3071J	J-451	017	TE-E11-1N004B (Seismic Only)	Q	TRS-E11-1R601	Non Class 1E	
NM1Q3071K	J-451	017	TE-E11-1N005B (Seismic Only)	Q	Computer Input AET06	Non Class 1E	R-1
NM1Q3071L	J-451	017	TE-E11-1N017B (Seismic Only)	Q	TRS-E11-1R601	Non Class 1E	
NM1Q3071M	J-451	017	TE-E11-1N017D (Seismic Only)	Q	TRS-E11-1R601	Non Class 1E	
NM1Q3071N	J-451	017	TE-E11-1N027B (Seismic Only)	Q	TRS-E11-1R601	Non Class 1E	
NM1Q3071P	J-451	017	TE-E11-1N032B (Seismic Only)	Q	TRS-E11-1R601	Non Class 1E	

Q Loads in Contact with CI-E11-1R006

CABLES	DWG	SH	FROM	SEPGR(FRM)	TO	SEPGR(TO)	ISOLATED
NM0G2401C	E-023	006	Ch A (WT (Transducer))	Q	Computer Input EGJ01	Non Class 1E	
NM0G2401C	E-023	006	Ch A (WT (Transducer))	Q	XI-00032A	Non Class 1E	
NM0G2401C	E-023	006	Ch A (WT (Transducer))	Q	Computer Input EGJ01 (Unit 2)	Non Class 1E	
NM0G2401D	E-023	006	Ch A (VART (Transducer))	Q	Computer Input EQU05	Non Class 1E	
NM0G2401E	E-023	006	Ch A (VT (Transducer))	Q	Computer Input EGE01	Non Class 1E	
NM0G2401F	E-023	006	Ch A (WH (Transducer))	Q	Computer Input EGA01 (Unit 2)	Non Class 1E	
NM0G2401G	E-023	006	Ch A (WH (Transducer))	Q	Computer Input EGA01	Non Class 1E	
NM0G2402C	E-023	006	Ch B (WT (Transducer))	Q	Computer Input EGJ02	Non Class 1E	R1
NM0G2402C	E-023	006	Ch B (WT (Transducer))	Q	XI-00032B	Non Class 1E	
NM0G2402C	E-023	006	Ch B (WT (Transducer))	Q	Computer Input EGJ02 (Unit 2)	Non Class 1E	
NM0G2402D	E-023	006	Ch B (VART (Transducer))	Q	Computer Input EQU06	Non Class 1E	
NM0G2402E	E-023	006	Ch B (VT (Transducer))	Q	Computer Input EGE02	Non Class 1E	
NM0G2402F	E-023	006	Ch B (WH (Transducer))	Q	Computer Input EGA02 (Unit 2)	Non Class 1E	
NM0G2402G	E-023	006	Ch B (WH (Transducer))	Q	Computer Input EGA02	Non Class 1E	
NM0G2403C	E-023	006	Ch C (WT (Transducer))	Q	XI-00032C	Non Class 1E	
NM0G2403C	E-023	006	Ch C (WT (Transducer))	Q	Computer Input EGJ03 (Unit 2)	Non Class 1E	
NM0G2403C	E-023	006	Ch C (WT (Transducer))	Q	Computer Input EGJ03	Non Class 1E	
NM0G2403D	E-023	006	Ch C (VART (Transducer))	Q	Computer Input EQU07	Non Class 1E	
NM0G2403E	E-023	006	Ch C (VT (Transducer))	Q	Computer Input EGE03	Non Class 1E	

CABLES	DWG	SH	FROM	SEPGR(FRM)	TO	SEPGR(TO)	ISOLATED
NM0G2403F	E-023	006	Ch C (WH (Transducer))	Q	Computer Input EGA03 (Unit 2)	Non Class 1E	
NM0G2403G	E-023	006	Ch C (WH Transducer))	Q	Computer Input EGA03	Non Class 1E	
NM0G2404C	E-023	006	Ch D (WT (Transducer))	Q	Computer Input EGJ04 (Unit 2)	Non Class 1E	
NM0G2404C	E-023	006	Ch D (WT (Transducer))	Q	XI-00032D	Non Class 1E	
NM0G2404C	E-023	006	Ch D (WT (Transducer))	Q	Computer Input EGJ03	Non Class 1E	
NM0G2404D	E-023	006	Ch D (VART (Transducer))	Q	Computer Input EQU07	Non Class 1E	
NM0G2404E	E-023	006	Ch D (VT (Transducer))	Q	Computer Input EGE04	Non Class 1E	
NM0G2404F	E-023	006	Ch D (WH (Transducer))	Q	Computer Input EGA04 (Unit 2)	Non Class 1E	
NM0G2404G	E-023	006	Ch D (WH (Transducer))	Q	Computer Input EGA04	Non Class 1E	
NM0S0400C	E-146	001	Ch A (AT-20108 (Transducer))	Q	Computer Input AEI01	Non Class 1E	
NM0S0401C	E-146	003	Ch B (AT-20208 (Transducer))	Q	Computer Input AEI02	Non Class 1E	
NM0S0402C	E-146	005	Ch C (AT-20303 (Transducer))	Q	Computer Input AEI03	Non Class 1E	
NM0S0403C	E-146	007	Ch C (AT-20403 (Transducer))	Q	Computer Input AEI04	Non Class 1E	
NM0V1200C	E-214	001	Ch C (AT-20310 (Transducer))	Q	Computer Input MVI05	Non Class 1E	
NM0V1201C	E-214	002	Ch D (AT-20410 (Transducer))	Q	Computer Input MVI06	Non Class 1E	
NM10ZZ011	M-147	001	LSH-C12-1N013E (Press Boundary)	Q	Computer Digital Input	Non Class 1E	
NM1A0402C	E-023	002	Ch B (AT-20201 (Transducer))	Q	Computer Input ETI42 (Unit 2)	Non Class 1E	
NM1A0402C	E-023	002	Ch B (AT-20201 (Transducer))	Q	Computer Input ETI42	Non Class 1E	
NM1A0402C	E-023	002	Ch B (AT-20201 (Transducer))	Q	XI-00024A	Non Class 1E	

R1

Q Loads in Contact with CI-E11-1R006

CABLES	DWG	SH	FROM	SEPGR(FRM)	TO	SEPGR(TO)	ISOLATED
NM1A0402D	E-023	002	Ch B (AT-20204 (Transducer))	Q	Computer Input EGI02	Non Class 1E	
NM1A0402D	E-023	002	Ch B (AT-20204 (Transducer))	Q	Computer Input EGI02 (Unit 2)	Non Class 1E	
NM1A0402D	E-023	002	Ch B (AT-20204 (Transducer))	Q	XI-00019A	Non Class 1E	
NM1A0402E	E-023	002	Ch B (VT-20204 (Transducer))	Q	Computer Input EBE42 (Unit 2)	Non Class 1E	
NM1A0402E	E-023	002	Ch B (VT-20204 (Transducer))	Q	Computer Input EBE42	Non Class 1E	
NM1A0402F	E-023	002	Ch B (AT-20209 (Transducer))	Q	Computer Input ETI92 (Unit 2)	Non Class 1E	
NM1A0402F	E-023	002	Ch B (AT-20209 (Transducer))	Q	XI-00028A	Non Class 1E	
NM1A0402F	E-023	002	Ch B (AT-20209 (Transducer))	Q	Computer Input ETI92	Non Class 1E	R1
NM1A0403E	E-023	001	Ch C (VT-20304 (Transducer))	Q	Computer Input EBE43 (Unit 2)	Non Class 1E	
NM1A0403E	E-023	001	Ch C (VT-20304 (Transducer))	Q	Computer Input EBE43	Non Class 1E	
NM1C0328D	E-135	015	Ch B (AT-20210 (Transducer))	Q	Computer Input TNI01	Non Class 1E	
NM1F0200F	E-179	001	PDT-C32-1N017 (Press Boundary)	Q	LR-C32-1R608	Non Class 1E	
NM1F0200F	E-179	001	PDT-C32-1N004B (Press Boundary)	Q	Computer Input NFL02	Non Class 1E	
NM1F0200H	E-179	001	PT-C32-1N008 (Press Boundary)	Q	PR-C32-1R609	Non Class 1E	
NM1F0200J	E-179	001	FT-C32-1N003A (Press Boundary)	Q	FY-C32-1K605A	Non Class 1E	
NM1F0200K	E-179	001	FT-C32-1N003B (Press Boundary)	Q	FY-C32-1K605B	Non Class 1E	
NM1F0200L	E-179	001	FT-C32-1N003C (Press Boundary)	Q	FY-C32-1K605C	Non Class 1E	
NM1F0200M	E-179	001	FT-C32-1N003D (Press Boundary)	Q	FY-C32-1K605D	Non Class 1E	
NM1F0200N	E-179	001	PDT-C32-1N004C (Press Boundary)	Q	LSH-C32-1K624C	Non Class 1E	

Q Loads in Contact with CI-E11-1R006

CABLES	DWG	SH	FROM	SEPGR(FRM)	TO	SEPGR(T0)	ISOLATED
NM1I5707D	J-457	003B	PT-15702 (Press Boundary)	Q	PSHL-15702	Non Class 1E	
NM1M0104A	E-302	003	TE-E11-1N004A (Press Boundary)	Q	Computer Input NHT01	Non Class 1E	
NM1M0104B	E-302	003	TE-E11-1N004B (Press Boundary)	Q	Computer Input NHT02	Non Class 1E	
NM1Q0300C	E-169	001	Ch A (AT-20107 (Transducer))	Q	Computer Input NDI01	Non Class 1E	
NM1Q0301C	E-169	002	Ch D (AT-20407 (Transducer))	Q	Computer Input NDI02	Non Class 1E	
NM1Q0802C	E-156	002	Ch A (AT-20205 (Transducer))	Q	Computer Input NSI02	Non Class 1E	
NM1Q1604E	E-181	007	PDT-B31-1N015A (Press Boundary)	Q	PDI-B31-1R612A	Non Class 1E	
NM1Q1604E	E-181	007	PDT-B31-1N015A (Press Boundary)	Q	TMS		
NM1Q2000H	E-158	001	LSH-C12-1N013E (Press Boundary)	Q	Relay K3	Non Class 1E	Contact to Coil R1
NM1Q3001C	E-153	003	Ch B (AT-20202 (Transducer))	Q	Computer Input NHI02	Non Class 1E	
NM1Q3066J	E-153	035	FT-E11-1N013 (Press Boundary)	Q	Computer Input NHF03	Non Class 1E	
NM1Q3066J	E-153	035	FT-E11-1N013 (Press Boundary)	Q	FI-E11-1R607	Non Class 1E	
NM1Q3070D	J-451	18	CE-E11-1N001B (Seismic Only)	Q	CISH-E11-1R001B	Non Class 1E	
NM1Q3071C	J-451	017	TE-E11-1N004A (Seismic Only)	Q	TRS-E11-1R601	Non Class 1E	
NM1Q3071E	J-451	017	TE-E11-1N017A (Seismic Only)	Q	TRS-E11-1R601	Non Class 1E	
NM1Q3071F	J-451	017	TE-E11-1N017C (Seismic Only)	Q	TRS-E11-1R601	Non Class 1E	
NM1Q3071G	J-451	017	TE-E11-1N027A (Seismic Only)	Q	TRS-E11-1R601	Non Class 1E	
NM1Q3071H	J-451	017	TE-E11-1N032A (Seismic Only)	Q	TRS-E11-1R601	Non Class 1E	
NM1Q3071J	J-451	017	TE-E11-1N004B (Seismic Only)	Q	TRS-E11-1R601	Non Class 1E	

Q Loads in Contact with CI-E11-1R006

CABLES	DWG	SH	FROM	SEPGR(FRM)	TO	SEPGR(TO)	ISOLATED
NM1Q3071K	J-451	017	TE-E11-1N005B (Seismic Only)	Q	Computer Input AET06	Non Class 1E	
NM1Q3071L	J-451	017	TE-E11-1N017B (Seismic Only)	Q	TRS-E11-1R601	Non Class 1E	
NM1Q3071M	J-451	017	TE-E11-1N017D (Seismic Only)	Q	TRS-E11-1R601	Non Class 1E	
NM1Q3071N	J-451	017	TE-E11-1N027B (Seismic Only)	Q	TRS-E11-1R601	Non Class 1E	
NM1Q3071P	J-451	017	TE-E11-1N032B (Seismic Only)	Q	TRS-E11-1R601	Non Class 1E	
NM1Q4191N	E-187	001	Div I (TE-15796A1 (T/C))	Q	Div I (TSS-15796A)	Q	
NM1Q4191P	E-187	001	Div I (TE-15796A2 (T/C))	Q	Div I (TSS-15796A)	Q	
NM1Q4191Q	E-187	001	Div I (TE-15796A3 (T/C))	Q	Div I (TSS-15796A)	Q	
NM1Q4193E	E-187	001	Div I (TE-15796C1 (T/C))	Q	Div I (TSS-15796C)	Q	
NM1Q4193F	E-187	001	Div I (TE-15796C2 (T/C))	Q	Div I (TSS-15796C)	Q	
NM1Q4193G	E-187	001	Div I (TE-15796C3 (T/C))	Q	Div I (TSS-15796C)	Q	
NM1Q4194E	E-187	001	Div II (TE-15796D1(T/C))	Q	Div II (TSS-15796D)	Q	
NM1Q4194F	E-187	001	Div II (TE-15796D2 (T/C))	Q	Div II (TSS-15796D)	Q	
NM1Q4194G	E-187	001	Div II (TE-15796D3 (T/C))	Q	Div II (TSS-15796D)	Q	
NM1V1601C	E-213	002	Ch A (AT-20211 (Transducer))	Q	Computer Input MVI04	Non Class 1E	
NM1V2601C	E-216	002	Ch B (AT-20203 (Transducer))	Q	Computer Input MVI02	Non Class 1E	

R1

Q Loads in Contact with LSH-15020

CABLES	DWG	SH	FROM	SEPGR(FRM)	TO	SEPGR(TO)	ISOLATED
EK1E11004	M1-E11-66	005	Div I (1D614)	Q	Div I (NO FOUND)	Q	
EK1E51001	M1-E51-90	006	Div I (1D254)	Q	Div I (HV-E51-1F008)	Q	
EK1E51002	M1-E51-90	006	Div I (1D614)	Q	Div I (HPCI EGM)	Q	
EK1E51002	M1-E51-90	007	Div I (1D254)	Q	Div I (HV-E51-1F031)	Q	
EK1E51002	M1-E51-90	008	Div I (1D254)	Q	Div I (HV-E51-1F022)	Q	
EK1E51003	M1-E51-90	008	Div I (1D254)	Q	Div I (HV-E51-1F010)	Q	
EK1E51004	M1-E51-90	008	Div I (1D254)	Q	Div I (HV-E51-1F012,19)	Q	
EK1E51005	M1-E51-90	008	Div I (1D254)	Q	Div I (HV-E51-1F013,19)	Q	
EK1E51006	M1-E51-90	003	Div I (1D614)	Q	Div I (PSH-E51-1N009A,B)	Q	
EK1E51006	M1-E51-90	004	Div I (1D614)	Q	Div I (PSH-E51-1N012A,C)	Q	
EK1E51006	M1-E51-90	009	Div I (1D614)	Q	Div I (HV-E51-1F025,54)	Q	
EK1E51007	M1-E51-90	003	Div I (1D614)	Q	Div I (PSL-E51-1N019A,C)	Q	
EK1E51007	M1-E51-90	003	Div I (1D614)	Q	Div I (LIS-B21-1N031A,C)	Q	
EK1E51007	M1-E51-90	004	Div I (1D614)	Q	Div I (HV-E51-1F031,45)	Q	
EK1E51007	M1-E51-90	009	Div I (1D614)	Q	Div I (HV-E51-1F004,54)	Q	
EK1E51007	M1-E51-90	009	Div I (1D614)	Q	Div I (RCIC Supv Lights)	Q	
EK1E51008	M1-E51-90	003	Div I (1D614)	Q	Div I (HV-E51-1F045,059)	Q	
EK1E51008	M1-E51-90	004	Div I (1D614)	Q	LSH-15020	Non Class 1E	
EK1E51008	M1-E51-90	004	Div I (1D614)	Q	LSH-15020	Non Class 1E	

R1

Q Loads in Contact with LSH-15020

CABLES	DWG	SH	FROM	SEPGR(FRM)	TO	SEPGR(T0)	ISOLATED
EK1E51008	M1-E51-90	004	Div I (1D614)	Q	Div I (RCIC Turbine Valve)	Q	
EK1E51008	M1-E51-90	004	Div I (1D614)	Q	Div I (LSL-E51-1N035E)	Q	
EK1E51008	M1-E51-90	009	Div I (1D614)	Q	Div I (HV-E51-1F054)	Q	
EK1E51009	M1-E51-90	003	Div I (1D614)	Q	Div I ((LIS-B21-1N024A)	Q	
EK1E51009	M1-E51-90	003	Div I (1D614)	Q	Div I (PSL-E51-1N019A,C)	Q	
EK1E51009	M1-E51-90	003	Div I (1D614)	Q	Div I (PDIS-E51-1N017)	Q	
EK1E51010	M1-E51-90	008	Div I (1D254)	Q	Div I (HV-E51-1F046,62)	Q	
EK1E51011	M1-E51-90	008	Div I (1D254)	Q	Div I (HV-E51-1F045)	Q	
EK1E51012	M1-E51-90	003	Div I (1D614)	Q	Div I (PS-E11-1N010A,C)	Q	
EK1E51012	M1-E51-90	003	Div I (1D614)	Q	Div I (RCIC Supv Lights)	Q	
EK1E51013	M1-E51-90	009	Div I (1D614)	Q	Div I (HV-E51-1F004,25,54)	Q	
EK1P62204	M1-B21-131	014	Div I (1B237)	Q	Div I (HV-B21-1F016)	Q	
EK1P62207	M1-B21-131	012	Div I (1D614)	Q	Div I (HV-B21-1F022A,B,C,D)	Q	
EK1P62213	M1-B21-131	014	Div I (1B236)	Q	Div I (HV-E11-1F040)	Q	
EK1P62215	M1-B21-131	012	Div I (1D614)	Q	Div I (HV-B21-1F022A,C)	Q	
EK1P62216	M1-B21-131	014	Div I (1B236)	Q	Div I (HV-E11-1F009)	Q	
EK1P64202	M1-B21-131	014	Div I (1B236)	Q	Div I (HV-G33-1F001)	Q	
EK1P6TT02	M1-B21-131	012	Div I (1D614)	Q	Div I (K7B,7D)	Q	
EK1PQ2101	M1-E51-90	005	Div I (1Y216)	Q	Div I (RCIC Status)	Q	

R1

CABLES	DWG	SH	FROM	SEPGR(FRM)	TO	SEPGR(T0)	ISOLATED
EK1PQ2101	M1-E51-90	011	Div I (1Y216)	Q	Div I (RCIC Status)	Q	
EK1PQ2103	M1-E51-90	004	Div I (1D614)	Q	Div I (S10	Q	
EK1PQ2103	M1-E51-90	008	Div I (1D254)	Q	Div I (HV-E51-1F022,45)	Q	
EK1PQ2104	M1-E51-90	008	Div I (1D254)	Q	Div I (HV-E51-1F010,45,46)	Q	
EK1PQ2105	M1-E51-90	008	Div I (1D254)	Q	Div I (HV-E51-1F010,12,19)	Q	
EK1PQ2106	M1-E51-90	008	Div I (1D254)	Q	Div I (HV-E51-1F012,13,62)	Q	
EK1PQ2107	M1-E51-90	008	Div I (1D254)	Q	Div I (HV-E51-1F008,13,19)	Q	
EK1PQ2108	M1-E51-90	003	Div I (1D614)	Q	Div I (S16)	Q	R1
EK1PQ2108	M1-E51-90	009	Div I (1D614)	Q	Div I (RCIC Supv Lights))	Q	
EK1PQ2108	M1-E51-90	009	Div I (1D614)	Q	Div I (HV-E51-1F004,54)	Q	
EK1PQ2109	M1-E51-90	003	Div I (1D614)	Q	Div I (S17,S23,S32,S18)	Q	
EK1PQ2109	M1-E51-90	009	Div I (1D614)	Q	Div I (HV-E51-1F025,62)	Q	
EK1PQ2112	M1-E51-90	009	Div I (1D614)	Q	Div I (RCIC Supv Lights)	Q	
EK1PQ2112	M1-E51-90	009	Div I (1D614)	Q	Div I (HV-E51-1F004,54)	Q	
EK1PQ2115	M1-E51-90	007	Div I (1D254)	Q	Div I (HV-E51-1F031)	Q	
EK1PQD102	M1-E51-90	003	Div I (1D614)	Q	Div I (LIS-B21-1N031B)	Q	
EK1PQD102	M1-E51-90	003	Div I (1D614)	Q	Div I (K48 Relay)	Q	
EK1R0009F	E-159	006	Div I (1Y236	Q	Div I (HV-16108A1)	Q	
EK1R0015B	E-159	008	Div I (1Y236)	Q	Div I (HV-16116A1)	Q	

Q Loads in Contact with FI-G33-1R602, 1R609, FDI-G33-1R615

CABLES	DWG	SH	FROM	SEPGR(FRM)	TO	SEPGR(TO)	ISOLATED
NM0S0400D	E-146	001	Ch A (AT-20108 (Transducer))	Q	Computer Input AEI01	Non Class 1E	
NM0S0401D	E-146	003	Ch B (AT-20208 (Transducer))	Q	Computer Input AEI02	Non Class 1E	
NM0S0402D	E-146	005	Ch C (AT-20308 (Transducer))	Q	Computer Input AEI03	Non Class 1E	
NM0S0403D	E-146	007	Ch C (AT-20408 (Transducer))	Q	Computer Input AEI04	Non Class 1E	
NM0V1200D	E-214	001	Ch C (AT-20310 (Transducer))	Q	Computer Input MVI05	Non Class 1E	
NM0V1201D	E-214	002	Ch D (AT-20410 (Transducer))	Q	Computer Input MVI06	Non Class 1E	
NM1A0403G	E-023	001	Ch C (VT-20301 (Transducer))	Q	Computer Input ETE42	Non Class 1E	
NM1C0328C	E-135	015	Ch B (AT-20210 (Transducer))	Q	Computer Input TNI01	Non Class 1E	
NM1I4801F	J-448	001	XY-14806 (Isolation Device)	Q	Computer Input NXF01	Non Class 1E	YES
NM1P1F101	M1-B21-128	003	LITS-B21-1N026D (Mech Sw See Ap	Q	LI-B21-1R604	Non Class 1E	
NM1PB4102	J-406	011	PDT-C32-1N004B (Press Boundary)	Q	LI-C32-1R606B	Non Class 1E	
NM1PB4102	J-406	012	PDT-C32-1N004A (Press Boundary)	Q	LI-C32-1R606A	Non Class 1E	
NM1PB4102	J-406	024	PT-C32-1N005 (Press Boundary)	Q	PI-C32-1R605	Non Class 1E	
NM1PB4103	J-406	013	PDT-C32-1N017 (Press Boundary)	Q	LR-C32-1R608	Non Class 1E	
NM1PB4105	M1-C32-17	003	PT-C32-1N008 (Press Boundary)	Q	FR-C32-1R609	Non Class 1E	
NM1PK0602	J-475	001	RISHH-D12-1K609A (See App G for	Q	RR-D12-1R605	Non Class 1E	
NM1PK0602	J-475	002	RISHH-D12-1K615A (See App G for	Q	RR-D12-1R607	Non Class 1E	
NM1PK0602	J-475	003	RISHH-D12-1K616A (See App G for	Q	RR-D12-1R608	Non Class 1E	
NM1PK0602	J-478	001	RISHH-D12-0K617A (See App G for	Q	RR-D12-0R609	Non Class 1E	

R1

Q Loads in Contact with FI-G33-1R602, 1R609, FDI-G33-1R615

CABLES	DWG	SH	FROM	SEPGR(FRM)	TO	SEPGR(TO)	ISOLATED
NM1PK0602	J-478	002	RISHH-D12-0K618A (See App G for	Q	RR-D12-0R610	Non Class 1E	
NM1PK0603	J-439	009	RY-13962C (Isoaltion Device)	Q	RR-D12-1R603	Non Class 1E	YES
NM1PK3301	J-439	008	RY-13962B (Isoaltion Device)	Q	RR-D12-1R603	Non Class 1E	YES
NM1PK3301	J-439	010	RY-13962D (Isoaltion Device)	Q	RR-D12-1R603	Non Class 1E	YES
NM1PK3302	J-475	001	RISHH-D12-1K609A (See App G for	Q	RR-D12-1R605	Non Class 1E	
NM1PK3302	J-475	005	RISHH-D12-1K615B (See App G for	Q	RR-D12-1R607	Non Class 1E	
NM1PK3302	J-475	005	RISHH-D12-0K618A (See App G for	Q	RR-D12-0R610	Non Class 1E	
NM1PK3302	J-475	006	RISHH-D12-1K616B (See App G for	Q	RR-D12-1R608	Non Class 1E	
NM1PK3302	J-478	001	RISHH-D12-0K617A (See App G for	Q	RR-D12-0R609	Non Class 1E	
NM1PM1307	J-451	009	FT-E11-1N013 (Press Boundary)	Q	FI-E11-1R607	Non Class 1E	
NM1PPF101	J-444	009	FY-G33-1K602 (See App F for eval.)	Q	FI-G33-1R609	Non Class 1E	
NM1PPF101	J-444	009	FY-G33-1K605 (See App F for eval.)	Q	FI-G33-1R602	Non Class 1E	
NM1PPF101	J-444	009	FY-G33-1K605 (See App F for eval.)	Q	FI-G33-1R602	Non Class 1E	
NM1PR4101	M1-G33-153	004	FT-G33-1N037 (Press Boundary)	Q	FI-G33-1R610	Non Class 1E	
NM1Q0045L	J-457	015	NIT-15725A (Isolation Device)	Q	Computer Input NM602	Non Class 1E	YES
NM1Q0045L	J-457	015	NIT-15725A (Isolation Device)	Q	Computer Input NM118	Non Class 1E	YES
NM1Q0045M	J-457	015	NIT-15725A (Isolation Device)	Q	SPDS Input NM6002Z	Non Class 1E	YES
NM1Q0048L	J-457	016	NIT-15725B (Isolation Device)	Q	Computer Input	Non Class 1E	YES
NM1Q0048L	J-457	016	NIT-15725B (Isolation Device)	Q	Computer Input NM601	Non Class 1E	YES

R1

Q Loads in Contact with FI-G33-1R602, 1R609, FDI-G33-1R615

CABLES	DWG	SH	FROM	SEPGR(FRM)	TO	SEPGR(TO)	ISOLATED
NM1Q0048L	J-457	016	NIT-15725B (Isolation Device)	Q	Computer Input NM117	Non Class 1E	YES
NM1Q0048M	J-457	016	NIT-15725B (Isolation Device)	Q	SPDS Input NM6001Z	Non Class 1E	YES
NM1Q0048M	J-457	016	NIT-15725B (Isolation Device)	Q	Computer Input	Non Class 1E	YES
NM1Q0300D	E-169	001	Ch A (AT-20107 (Transducer))	Q	Computer Input NDI01	Non Class 1E	
NM1Q0301D	E-169	002	Ch D (AT-20407 (Transducer))	Q	Computer Input NDI02	Non Class 1E	
NM1Q0801D	E-156	001	Ch A (AT-20105 (Transducer))	Q	Computer Input NSI01	Non Class 1E	
NM1Q0802D	E-156	002	Ch B (AT-20205 (Transducer))	Q	Computer Input NSI01	Non Class 1E	
NM1Q0803D	E-156	003	Ch C (AT-20305 (Transducer))	Q	Computer Input NSI01	Non Class 1E	
NM1Q0804D	E-156	004	Ch D (AT-20405 (Transducer))	Q	Computer Input NSI01	Non Class 1E	
NM1Q3000D	E-153	001	Ch A (AT-20102 (Trnasducer))	Q	Computer Input NHI01	Non Class 1E	
NM1Q3001D	E-153	003	Ch B (AT-20202 (Trnasducer))	Q	Computer Input NHI02	Non Class 1E	
NM1Q3002D	E-153	005	Ch C (AT-20302 (Trnasducer))	Q	Computer Input NHI03	Non Class 1E	
NM1Q3003D	E-153	007	Ch D (AT-20402 (Trnasducer))	Q	Computer Input NHI04	Non Class 1E	
NM1Q3071C	J-451	017	TE-E11-1N004A (Seismic Only)	Q	TRS-E11-1R601	Non Class 1E	
NM1Q3071E	J-451	017	TE-E11-1N017A (Seismic Only)	Q	TRS-E11-1R601	Non Class 1E	
NM1Q3071F	J-451	017	TE-E11-1N017C (Seismic Only)	Q	TRS-E11-1R601	Non Class 1E	
NM1Q3071G	J-451	017	TE-E11-1N027A (Seismic Only)	Q	TRS-E11-1R601	Non Class 1E	
NM1Q3071H	J-451	017	TE-E11-1N032A (Seismic Only)	Q	TRS-E11-1R601	Non Class 1E	
NM1Q3071J	J-451	017	TE-E11-1N004B (Seismic Only)	Q	TRS-E11-1R601	Non Class 1E	

R1

Q Loads in Contact with FI-G33-1R602, 1R609, FDI-G33-1R615

CABLES	DWG	SH	FROM	SEPGR(FRM)	TO	SEPGR(TO)	ISOLATED
NM1Q3071K	J-451	017	TE-E11-1N005B (Seismic Only)	Q	Computer Input AET06	Non Class 1E	
NM1Q3071L	J-451	017	TE-E11-1N017B (Seismic Only)	Q	TRS-E11-1R601	Non Class 1E	
NM1Q3071M	J-451	017	TE-E11-1N017D (Seismic Only)	Q	TRS-E11-1R601	Non Class 1E	
NM1Q3071N	J-451	017	TE-E11-1N027B (Seismic Only)	Q	TRS-E11-1R601	Non Class 1E	
NM1Q3071P	J-451	017	TE-E11-1N032B (Seismic Only)	Q	TRS-E11-1R601	Non Class 1E	
NM1S0600D	E-150	003	Ch D (AT-20408 (Transducer))	Q	Computer Input AEI05	Non Class 1E	
NM1S0601D	E-150	001	Ch C (AT-20308 (Transducer))	Q	Computer Input AEI06	Non Class 1E	
NM1V1600D	E-213	001	Ch A (AT-20110 (Transducer))	Q	Computer Input MVI03	Non Class 1E	
NM1V1601D	E-213	002	Ch B (AT-20211 (Transducer))	Q	Computer Input MVI04	Non Class 1E	
NM1V2600D	E-216	001	Ch A (AT-20108 (Transducer))	Q	Computer Input MVI01	Non Class 1E	
NM1V2601D	E-216	002	Ch B (AT-20208 (Transducer))	Q	Computer Input MVI02	Non Class 1E	

R1

Q Loads in Contact with RR-D12-0R609, OR610, 1R605, 1R607, 1R608

CABLES	DWG	SH	FROM	SEPGR(FRM)	TO	SEPGR(TO)	ISOLATED
NK1C51011	M1-C51-20	012	Aux Unit Z2C	Q	IRM Det Position	Non Class 1E	Contact to Coil
NK1PD4205	M1-C51-19	018	IRM AUX UNIT (See App H for Eval.)	Q	NR-C51-1R603B	Non Class 1E	
NK1Q0029A	E-304	036	SVX2-157104 (Isolation Relay)	Q	SPDS-NCZ620Z	Non Class 1E	YES
NK1Q0029A	E-304	036	SVX1-157100A (Isolation Relay)	Q	SPDS-NCZ612Z	Non Class 1E	YES
NK1Q0029A	E-304	036	SVX1-157100A (Isolation Relay)	Q	SPDS-NCZ114Z	Non Class 1E	YES
NK1Q0029A	E-304	036	SVX1-157102A (Isolation Relay)	Q	SPDS-NCZ614Z	Non Class 1E	YES
NK1Q0029A	E-304	036	SVX1-157100B (Isolation Relay)	Q	SPDS-NCZ116Z	Non Class 1E	YES
NK1Q0029A	E-304	036	SVX2-157100B (Isolation Relay)	Q	SPDS-NCZ616Z	Non Class 1E	YES
NK1Q0029A	E-304	036	SVX1-1571002A (Isolation Relay)	Q	SPDS-NCZ118Z	Non Class 1E	YES
NK1Q0029A	E-304	036	SVX1-157104 (Isolation Relay)	Q	SPDS-NCZ120Z	Non Class 1E	YES
NK1Q0029A	E-304	036	SVX1-157104 (Isolation Relay)	Q	SPDS-NCZ122Z	Non Class 1E	YES
NK1Q0029A	E-304	036	SVX2-1571002B (Isolation Relay)	Q	SPDS-NCZ618Z	Non Class 1E	YES
NK1Q0029B	E-304	036	SVX2-157104 (Isolation Relay)	Q	SPDS-NCZ622Z	Non Class 1E	YES
NK1Q0053A	J-439	007	RY-13961C (Isolation Device)	Q	ES-G33-1K601	Non Class 1E	YES
NK1Q4243M	E-304	002A	Relay k 60 Dry Contact	Q	SPDS-NIZ002Z	Non Class 1E	Contact to Coil
NM1A0403G	E-023	001	Ch C (VT-20301 (Transducer))	Q	Computer Input ETE42	Non Class 1E	
NM1B21006	M1-B21-128	003	LT-B21-1N027 (Press Boundary)	Q	LI-B21-1R605	Non Class 1E	
NM1B21006	M1-B21-128	003	LITS-B21-1N026D (Mech Sw See App C for Eval.)	Q	LI-B21-1R604	Non Class 1E	
NM1B21007	M1-B21-94	002	FT-B21-1N034K (Press Boundary)	Q	PDI-B21-1R608K	Non Class 1E	

R1

Q Loads in Contact with RR-D12-0R609, OR610, 1R605, 1R607, 1R608

CABLES	DWG	SH	FROM	SEPGR(FRM)	TO	SEPGR(TO)	ISOLATED
NM1B21007	M1-B21-94	002	FT-B21-1N034M (Press Boundary)	Q	PDI-B21-1R608M	Non Class 1E	
NM1B21007	M1-B21-94	002	FT-B21-1N034P (Press Boundary)	Q	PDI-B21-1R608P	Non Class 1E	
NM1B21007	M1-B21-94	002	FT-B21-1N034S (Press Boundary)	Q	PDI-B21-1R608S	Non Class 1E	
NM1B21008	M1-B21-94	001	FT-B21-1N034B (Press Boundary)	Q	PDI-B21-1R608B	Non Class 1E	
NM1B21008	M1-B21-94	001	FT-B21-1N033A (Press Boundary)	Q	FY-B21-1K605A	Non Class 1E	
NM1B21008	M1-B21-94	001	FT-B21-1N033C (Press Boundary)	Q	FY-B21-1K605C	Non Class 1E	
NM1B21008	M1-B21-94	002	FT-B21-1N034H (Press Boundary)	Q	PDI-B21-1R608H	Non Class 1E	
NM1B21008	M1-B21-94	002	FT-B21-1N034F (Press Boundary)	Q	PDI-B21-1R608F	Non Class 1E	
NM1B21008	M1-B21-94	002	FT-B21-1N034D (Press Boundary)	Q	PDI-B21-1R608D	Non Class 1E	
NM1B21009	M1-B21-94	001	FT-B21-1N033A (Press Boundary)	Q	FY-B21-1K605A	Non Class 1E	
NM1B21010	M1-B21-94	001	FT-B21-1N033B (Press Boundary)	Q	FY-B21-1K605B	Non Class 1E	
NM1B21010	M1-B21-94	001	FT-B21-1N033D (Press Boundary)	Q	FY-B21-1K605D	Non Class 1E	
NM1B21010	M1-B21-94	002	FT-B21-1N034C (Press Boundary)	Q	PDI-B21-1R608C	Non Class 1E	
NM1B21010	M1-B21-94	002	FT-B21-1N034E (Press Boundary)	Q	PDI-B21-1R608E	Non Class 1E	
NM1B21010	M1-B21-94	002	FT-B21-1N034G (Press Boundary)	Q	PDI-B21-1R608G	Non Class 1E	
NM1B21010	M1-B21-94	002	FT-B21-1N034A (Press Boundary)	Q	PDI-B21-1R608A	Non Class 1E	
NM1B21011	M1-B21-94	001	PDT-B21-1N032 (Press Boundary)	Q	XR-B21-1R613	Non Class 1E	
NM1C51045	M1-C51-20	012	Aux Unit Z2C	Q	IRM Det Position	Non Class 1E	Contact to Coil
NM1F0203E	E-304	017	PDT-B21-1N032 (Press Boundary)	Q	SPDS NJP051Z	Non Class 1E	

R1

Q Loads in Contact with RR-D12-0R609, OR610, 1R605, 1R607, 1R608

CABLES	DWG	SH	FROM	SEPGR(FRM)	TO	SEPGR(TO)	ISOLATED
NM1F0203F	E-304	017	LITS-B21-IN026D (Mech Sw See App C for Eval.)	Q	SPDS NBL002Z	Non Class 1E	
NM1I4202L	J-442	002	LY-14202A (Isolation Device)	Q	Computer Input	Non Class 1E	YES
NM1I4801C	J-448	002	R.G. 1.97 Cat 2 (FT-14806 See App I for Eval.)	Q	R.G. 1.97 Cat 2 (LI/FI 14806)	Q	
NM1I4801F	J-448	001	XY-14806 (Isolation Device)	Q	Computer Input NXF01	Non Class 1E	YES
NM1P11901	M1-B21-128	003	LT-B21-1N027 (Pressure Boundary)	Q	LI-B21-1R605	Non Class 1E	
NM1P14101	M1-B21-128	003	PDT-B31-1N015A (Press Boundary)	Q	PDI-B31-1R612A	Non Class 1E	
NM1P14101	M1-B21-128	003	PDT-B31-1N015B (Press Boundary)	Q	PDI-B31-1R612B	Non Class 1E	
NM1P1F101	M1-B21-128	003	LITS-B21-1N026D (Mech Sw See App C for Eval.)	Q	LI-B21-1R604	Non Class 1E	
NM1P91601	M1-C12-110	016	APRM Trip Unit Contacts	Q	Isolator Card Z1	Non Class 1E	Contact to Coil
NM1P91603	M1-C12-110	015	APRM Trip Unit Contacts	Q	Isolator Card Z1	Non Class 1E	Contact to Coil
NM1PB4102	J-406	011	PDT-C32-1N004B (Press Boundary)	Q	LI-C32-1R606B	Non Class 1E	
NM1PB4102	J-406	012	PDT-C32-1N004A (Press Boundary)	Q	LI-C32-1R606A	Non Class 1E	
NM1PB4102	J-406	024	PT-C32-1N005 (Press Boundary)	Q	PI-C32-1R605	Non Class 1E	
NM1PB4103	J-406	013	PDT-C32-1N017 (Press Boundary)	Q	LR-C32-1R608	Non Class 1E	
NM1PB4105	M1-C32-17	003	PT-C32-1N008 (Press Boundary)	Q	FR-C32-1R609	Non Class 1E	
NM1PC1301	J-448	003	R.G. 1.97 Cat 2 (LI/FI-14806 See App I for Eval.)	Q	LT-C41-1N001	Non Class 1E	
NM1PD4206	M1-C51-20	006	IRM Range Sw E	Q	C51-1K601E (IRM Mon)	Q	
NM1PD4213	M1-C51-20	006	IRM Range Sw C	Q	C51-1K601C (IRM Mon)	Q	
NM1PD4217	M1-C51-20	006	IRM Range Sw A	Q	C51-1K601A (IRM Mon)	Q	

R1

Q Loads in Contact with RR-D12-0R609, OR610, 1R605, 1R607, 1R608

CABLES	DWG	SH	FROM	SEPGR(FRM)	TO	SEPGR(T0)	ISOLATED
NM1PD4X01	M1-C51-20	007	C51-1K601F (IRM Mon See App H for Eval.)	Q	NR-C51-1R603D	Non Class 1E	
NM1PD4X01	M1-C51-20	007	C51-1K601B (IRM Mon See App H for Eval.)	Q	NR-C51-1R603B	Non Class 1E	
NM1PD4X02	M1-C51-20	007	C51-1K601D (IRM Mon See App H for Eval.)	Q	NR-C51-1R603B	Non Class 1E	
NM1PD4X02	M1-C51-20	007	C51-1K601H (IRM Mon See App H for Eval.)	Q	NR-C51-1R603D	Non Class 1E	
NM1PE4101	M1-C51-19	022	Aux Trip Unit AR12 (See App H for Eval.)	Q	NR-C51-1R603D	Non Class 1E	
NM1PE4103	M1-C51-19	018	Aux Trip Unit AR12 (See App H for Eval.)	Q	NR-C51-1R603B	Non Class 1E	
NM1PE4103	M1-C51-19	018	Aux Trip Unit AR12 (See App H for Eval.)	Q	NR-C51-1R603B	Non Class 1E	
NM1PE4109	M1-C51-19	012	Aux Trip Unit AR31 (See App H for Eval.)	Q	NR-C51-1R603A	Non Class 1E	
NM1PE4109	M1-C51-19	014	Aux Trip Unit AR32 (See App H for Eval.)	Q	NR-C51-1R603B	Non Class 1E	
NM1PE4110	M1-C51-19	016	Aux Trip Unit AR41 (See App H for Eval.)	Q	NR-C51-1R603A	Non Class 1E	
NM1PE4111	M1-C51-19	020	Aux Trip Unit AR51 (See App H for Eval.)	Q	NR-C51-1R603C	Non Class 1E	
NM1PE4111	M1-C51-19	033	Driver Card Z33 (See App H for Eval.)	Q	NR-C51-1R603C	Non Class 1E	
NM1PE4112	M1-C51-19	033	Driver Card (See App H for Eval.)	Q	NR-C51-1R603C	Non Class 1E	
NM1PE4215	M1-C51-19	015	LPRM Card Dry Contact	Q	Indicating Light	Non Class 1E	Contact to Coil
NM1PE4215	M1-C51-19	015	LPRM Card Dry Contact	Q	Indicating Light	Non Class 1E	Contact to Coil
NM1PE4216	M1-C51-19	010	LPRM CARD Z11	Q	Indicating Lights	Non Class 1E	Contact to Coil
NM1PE4218	M1-C51-19	027	LPRM Card Dry Contact	Q	Indicating Light	Non Class 1E	Contact to Coil
NM1PE4219	M1-C51-19	027	LPRM Card Dry Contact	Q	Indicating Light	Non Class 1E	Contact to Coil
NM1PE4223	M1-C51-19	011	LPRM Card Dry Contact	Q	Indicating Light	Non Class 1E	Contact to Coil

R1

Q Loads in Contact with RR-D12-0R609, OR610, 1R605, 1R607, 1R608

CABLES	DWG	SH	FROM	SEPGR(FRM)	TO	SEPGR(T0)	ISOLATED
NM1PE4224	M1-C51-19	011	LPRM Card Dry Contact	Q	Indicating Light	Non Class 1E	Contact to Coil
NM1PE4238	M1-C51-19	017	LPRM Card Dry Contact	Q	Indicating Light	Non Class 1E	Contact to Coil
NM1PE4239	M1-C51-19	017	LPRM Card Dry Contact	Q	Indicating Light	Non Class 1E	Contact to Coil
NM1PE4245	M1-C51-19	019	LPRM Card Dry Contact	Q	Indicating Light	Non Class 1E	Contact to Coil
NM1PK0602	J-475	001	RISHH-D12-1K609A (See App G for Eval.)	Q	RR-D12-1R605	Non Class 1E	
NM1PK0602	J-475	002	RISHH-D12-1K615A (See App G for Eval.)	Q	RR-D12-1R607	Non Class 1E	
NM1PK0602	J-475	003	RISHH-D12-1K616A (See App G for Eval.)	Q	RR-D12-1R608	Non Class 1E	
NM1PK0602	J-478	001	RISHH-D12-0K617A (See App G for Eval.)	Q	RR-D12-0R609	Non Class 1E	
NM1PK0602	J-478	002	RISHH-D12-0K618A (See App G for Eval.)	Q	RR-D12-0R610	Non Class 1E	R1
NM1PK0603	J-439	009	RY-13962C (Isoaltion Device)	Q	RR-D12-1R603	Non Class 1E	YES
NM1PK3301	J-439	008	RY-13962B (Isoaltion Device)	Q	RR-D12-1R603	Non Class 1E	YES
NM1PK3301	J-439	010	RY-13962D (Isoaltion Device)	Q	RR-D12-1R603	Non Class 1E	YES
NM1PK3302	J-475	001	RISHH-D12-1K609A (See App G for Eval.)	Q	RR-D12-1R605	Non Class 1E	
NM1PK3302	J-475	005	RISHH-D12-0K618A (See App G for Eval.)	Q	RR-D12-0R610	Non Class 1E	
NM1PK3302	J-475	005	RISHH-D12-1K615B (See App G for Eval.)	Q	RR-D12-1R607	Non Class 1E	
NM1PK3302	J-475	006	RISHH-D12-1K616B (See App G for Eval.)	Q	RR-D12-1R608	Non Class 1E	
NM1PK3302	J-478	001	RISHH-D12-0K617A (See App G for Eval.)	Q	RR-D12-0R609	Non Class 1E	
NM1PM1307	J-451	009	FT-E11-1N013 (Press Boundary)	Q	FI-E11-1R607	Non Class 1E	
NM1PPF101	J-444	009	FY-G33-1K602 (See App F for eval.)	Q	FI-G33-1R609	Non Class 1E	

Q Loads in Contact with RR-D12-0R609, OR610, 1R605, 1R607, 1R608

CABLES	DWG	SH	FROM	SEPGR(FRM)	TO	SEPGR(TO)	ISOLATED
NM1PPF101	J-444	009	FY-G33-1K605 (See App F for eval.)	Q	FI-G33-1R602	Non Class 1E	
NM1PPF101	J-444	009	FY-G33-1K605 (See App F for eval.)	Q	FI-G33-1R602	Non Class 1E	
NM1PQ4101	M1-C51-20	006	C51-1K601E (IRM Mon See App H for Eval.)	Q	NR-C51-1R603C	Non Class 1E	
NM1PQ4101	M1-C51-20	006	C51-1K601A (IRM Mon See App H for Eval.)	Q	NR-C51-1R603A	Non Class 1E	
NM1PQ4102	M1-C51-20	006	C51-1K601C (IRM Mon See App H for Eval.)	Q	NR-C51-1R603A	Non Class 1E	
NM1PQ4102	M1-C51-20	006	C51-1K601G (IRM Mon See App H for Eval.)	Q	NR-C51-1R603C	Non Class 1E	
NM1PR4101	M1-G33-153	004	FT-G33-1N037 (Press Boundary)	Q	FI-G33-1R610	Non Class 1E	
NM1PR7N01	M1-G33-153	004	FY-14476 (Isolation Device)	Q	Computer Analog Input	Non Class 1E	YES
NM1Q0045L	J-457	015	NIT-15725A (Isolation Device)	Q	Computer Input NM118	Non Class 1E	YES
NM1Q0045L	J-457	015	NIT-15725A (Isolation Device)	Q	Computer Input NM602	Non Class 1E	YES
NM1Q0045M	J-457	015	NIT-15725A (Isolation Device)	Q	SPDS Input NM6002Z	Non Class 1E	YES
NM1Q0048L	J-457	016	NIT-15725B (Isolation Device)	Q	Computer Input NM117	Non Class 1E	YES
NM1Q0048L	J-457	016	NIT-15725B (Isolation Device)	Q	Computer Input	Non Class 1E	YES
NM1Q0048L	J-457	016	NIT-15725B (Isolation Device)	Q	Computer Input NM601	Non Class 1E	YES
NM1Q0048M	J-457	016	NIT-15725B (Isolation Device)	Q	Computer Input	Non Class 1E	YES
NM1Q0048M	J-457	016	NIT-15725B (Isolation Device)	Q	SPDS Input NM6001Z	Non Class 1E	YES
NM1Q1217L	E-304	017	XY-14201F (Isolation Device)	Q	SPDS NM5006Z	Non Class 1E	YES
NM1Q1217M	E-304	017	XY-14201B (Isolation Device)	Q	SPDS NM5002Z	Non Class 1E	YES
NM1Q1217M	E-304	017	XY-14201A (Isolation Device)	Q	SPDS NM5001Z	Non Class 1E	YES

R1

Q Loads in Contact with RR-D12-0R609, OR610, 1R605, 1R607, 1R608

CABLES	DWG	SH	FROM	SEPGR(FRM)	TO	SEPGR(T0)	ISOLATED
NM1Q1217N	E-304	017	XY-14201D (Isolation Device)	Q	SPDS NM5004Z	Non Class 1E	YES
NM1Q1217P	E-304	017	XY-14201C (Isolation Device)	Q	SPDS NM5003Z	Non Class 1E	YES
NM1Q1217Q	E-304	017	XY-14201E (Isolation Device)	Q	SPDS NM5005Z	Non Class 1E	YES
NM2M0110C	J-411	003	XY-01109B1 (Isolation Device)	Q	Computer Input	Non Class 1E	YES

R1

Q Loads in Contact with RR-D12-0R609, 0R610, 1R605, 1R607, 1R608

CABLES	DWG	SH	FROM	SEPGR(FRM)	TO	SEPGR(TO)	ISOLATED
NK1P9FT01	M1-C12-110	011	Relay C72A - K24D, K25D, K27D	Q	Transmitter Card Z12	Non Class 1E	Contact to Coil
NK1P9FT02	M1-C12-110	031	Relay C72A - K34B	Q	Full Core Display	Non Class 1E	Contact to Coil
NK1P9FT03	M1-C12-110	031	Relay C72A - K34D	Q	Full Core Display	Non Class 1E	Contact to Coil
NK1PDF205	M1-C51-20	012	IRM Range Switch B, F	Q	Trip Aux Unit Z2B	Non Class 1E	
NK1PDF211	M1-C51-20	012	IRM Range Switch D, H	Q	Trip Aux Unit Z2B	Non Class 1E	
NK1PDF215	M1-C51-20	005	IRM Range Switch B	Q	Trip Aux Unit Z2B	Non Class 1E	
NK1PDF217	M1-C51-20	005	IRM Range Switch B	Q	Trip Aux Unit Z2B	Non Class 1E	
NK1PDF218	M1-C51-20	009	IRM Range Switch B	Q	Trip Aux Unit Z2B	Non Class 1E	
NK1PDF219	M1-C51-20	009	IRM Range Switch D	Q	Trip Aux Unit Z2B	Non Class 1E	
NK1Q0054A	J-439	008	RY-13961B (Isolation Device)	Q	ES-B31-1K600	Non Class 1E	YES
NK1Q4243J	E-304	004	V1B4X (Isolation Relay)	Q	SPDS-NBY-012Z	Non Class 1E	YES
NK1Q4243J	E-304	004	V1B3X (Isolation Relay)	Q	SPDS-NBY-011Z	Non Class 1E	YES
NK1Q4243J	E-304	004	V1B2X (Isolation Relay)	Q	SPDS-NBY-010Z	Non Class 1E	YES
NK1Q4243J	E-304	004	V1B5X (Isolation Relay)	Q	SPDS-NBY-013Z	Non Class 1E	YES
NK1Q4243J	E-304	004	V1B6X (Isolation Relay)	Q	SPDS-NBY-014Z	Non Class 1E	YES
NK1Q4243J	E-304	004	V1B7X (Isolation Relay)	Q	NSPDS-BY-015Z	Non Class 1E	YES
NK1Q4243J	E-304	004	V1B8X (Isolation Relay)	Q	NSPDS-BY-016Z	Non Class 1E	YES
NK1Q4243J	E-304	004	V1B1X (Isolation Relay)	Q	SPDS-NBY-009Z	Non Class 1E	YES
NK1Q4243K	E-304	005	ARX1-15746A (Ioslation Relay)	Q	SPDS-MAH002Z	Non Class 1E	YES

R1

Q Loads in Contact with RR-D12-0R609, 0R610, 1R605, 1R607, 1R608

CABLES	DWG	SH	FROM	SEPGR(FRM)	TO	SEPGR(TO)	ISOLATED
NK1Q4243K	E-304	019	ARX-15746A (Ioslation Relay)	Q	SPDS-MAH004Z	Non Class 1E	YES
NK1Q4243N	E-304	01A	Relay K-38 Dry Contact	Q	SPDS-N6Z002Z	Non Class 1E	Contact to Coil
NK1Q4243P	E-304	02A	Relay K-61 Dry Contact	Q	SPDS-N1Z003Z	Non Class 1E	Contact to Coil
NM1A0403G	E-023	001	Ch C (VT-20301 (Transducer))	Q	Computer Input ETE42	Non Class 1E	
NM1E02006	E-005	001	Ch B (AT-20201 (Transducer))	Q	Computer Input ETI42	Non Class 1E	
NM1E02007	E-005	001	Ch A (AT-20101 (Transducer))	Q	Computer Input ETI42	Non Class 1E	
NM1E02007	E-005	005	Ch A (VT-20101 (Transducer))	Q	Computer Input ETE41	Non Class 1E	
NM1E02007	E-005	005	Ch A (AT-20109 (Transducer))	Q	Computer Input ETI91	Non Class 1E	
NM1E02007	E-005	005	Ch A (VT-20110 (Transducer))	Q	Computer Input ETE91	Non Class 1E	
NM1E02007	E-005	005	Ch A (VT-20105 (Transducer))	Q	Computer Input EBE41	Non Class 1E	
NM1E02007	E-005	005	Ch A (AT-20104 (Transducer))	Q	Computer Input EGI01	Non Class 1E	
NM1E02009	E-005	001	Ch C (AT-20309 (Transducer))	Q	Computer Input ETI93	Non Class 1E	
NM1E02009	E-005	001	Ch D (AT-20401 (Transducer))	Q	Computer Input ETI44	Non Class 1E	
NM1E02009	E-005	001	Ch D (AT-20404 (Transducer))	Q	Computer Input EGI04	Non Class 1E	
NM1E02009	E-005	001	Ch D (AT-20204 (Transducer))	Q	Computer Input EGI02	Non Class 1E	
NM1E02009	E-005	001	Ch C (VT-20310 (Transducer))	Q	Computer Input ETE92	Non Class 1E	
NM1E02009	E-005	001	Ch D (VT-20405 (Transducer))	Q	Computer Input EBE44	Non Class 1E	
NM1E02009	E-005	001	Ch D (AT-20409 (Transducer))	Q	Computer Input ETI94	Non Class 1E	
NM1E02010	E-005	004	XY-42403 (Isolation Device)	Q	Computer Input EGU05	Non Class 1E	YES

R1

Q Loads in Contact with RR-D12-0R609, 0R610, 1R605, 1R607, 1R608

CABLES	DWG	SH	FROM	SEPGR(FRM)	TO	SEPGR(TO)	ISOLATED
NM1E02010	E-005	004	XY-42401 (Isolation Device)	Q	Computer Input EGE02	Non Class 1E	YES
NM1E02010	E-005	004	XY-42402(Isolation Device)	Q	Computer Input EGU06	Non Class 1E	YES
NM1E02010	E-005	004	XY-42404 (Isolation Device)	Q	Computer Input EGE01	Non Class 1E	YES
NM1E02010	E-005	004	XY-42405 (Isolation Device)	Q	Computer Input EGJ02	Non Class 1E	YES
NM1E02010	E-005	004	XY-42406 (Isolation Device)	Q	Computer Input EGJ01	Non Class 1E	YES
NM1E02011	E-005	004	XY-42408 (Isolation Device)	Q	Computer Input EGU07	Non Class 1E	YES
NM1E02011	E-005	004	XY-42407 (Isolation Device)	Q	Computer Input EGE04	Non Class 1E	YES
NM1E02011	E-005	004	XY-42409 (Isolation Device)	Q	Computer Input EGU08	Non Class 1E	YES
NM1E02011	E-005	004	XY-42411 (Isolation Device)	Q	Computer Input EGE03	Non Class 1E	YES
NM1E02011	E-005	004	XY-42410 (Isolation Device)	Q	Computer Input EGJ04	Non Class 1E	YES
NM1E02011	E-005	004	XY-42412 (Isolation Device)	Q	Computer Input EGJ03	Non Class 1E	YES
NM1I4202L	J-442	002	LY-14202A (Isolation Device)	Q	Computer Input	Non Class 1E	YES
NM1I4203L	J-442	003	LY-14201B (Isolation Device)	Q	Computer Input	Non Class 1E	YES
NM1I4801C	J-448	002	R.G. 1.97 Cat 2 (FT-14806 See App I for Eval.)	Q	R.G. 1.97 Cat 2 (LI/FI 14806)	Q	
NM1I4801F	J-448	001	XY-14806 (Isolation Device)	Q	Computer Input NXF01	Non Class 1E	YES
NM1I5719A	J-457	009	TX-15751 (Isolated See IOM 504)	Q	Computer Input	Non Class 1E	YES
NM1I5720A	J-457	010	TX-15752 (Isolated See IOM 504)	Q	Computer Input	Non Class 1E	YES
NM1M0107C	E-302	003	FT-01204A (Pressure Boundary)	Q	Computer Input AEF05	Non Class 1E	
NM1M0107D	E-302	003	FT-01204A (Pressure Boundary)	Q	Computer Input AEF04	Non Class 1E	

R1

Q Loads in Contact with RR-D12-0R609, 0R610, 1R605, 1R607, 1R608

CABLES	DWG	SH	FROM	SEPGR(FRM)	TO	SEPGR(TO)	ISOLATED
NM1P14101	M1-B21-128	003	PDT-B31-1N015A (Press Boundary)	Q	PDI-B31-1R612A	Non Class 1E	
NM1P14101	M1-B21-128	003	PDT-B31-1N015B (Press Boundary)	Q	PDI-B31-1R612B	Non Class 1E	
NM1P1F101	M1-B21-128	003	LITS-B21-1N026D (Mech Sw See App C for Eval.)	Q	LI-B21-1R604	Non Class 1E	
NM1P91603	M1-C12-110	015	APRM Trip Unit Contacts	Q	Isolator Card Z1	Non Class 1E	Contact to Coil
NM1PB4102	J-406	011	PDT-C32-1N004B (Press Boundary)	Q	LI-C32-1R606B	Non Class 1E	
NM1PB4102	J-406	012	PDT-C32-1N004A (Press Boundary)	Q	LI-C32-1R606A	Non Class 1E	
NM1PB4102	J-406	024	PT-C32-1N005 (Press Boundary)	Q	PI-C32-1R605	Non Class 1E	
NM1PB4103	J-406	013	PDT-C32-1N017 (Press Boundary)	Q	LR-C32-1R608	Non Class 1E	
NM1PB4105	M1-C32-17	003	PT-C32-1N008 (Press Boundary)	Q	FR-C32-1R609	Non Class 1E	
NM1PD4X01	M1-C51-20	007	C51-1K601F (IRM Mon See App H for Eval.)	Q	NR-C51-1R603D	Non Class 1E	
NM1PD4X01	M1-C51-20	007	C51-1K601B (IRM Mon See App H for Eval.)	Q	NR-C51-1R603B	Non Class 1E	
NM1PD4X02	M1-C51-20	007	C51-1K601H (IRM Mon See App H for Eval.)	Q	NR-C51-1R603D	Non Class 1E	
NM1PD4X02	M1-C51-20	007	C51-1K601D (IRM Mon See App H for Eval.)	Q	NR-C51-1R603B	Non Class 1E	
NM1PDF206	M1-C51-20	007	IRM Range Switch B	Q	IRM-C51-1K601B	Q	
NM1PDF207	M1-C51-20	007	IRM Range Switch F	Q	IRM-C51-1K601F	Q	
NM1PDF212	M1-C51-20	007	IRM Range Switch D	Q	IRM-C51-1K601D	Q	
NM1PDF213	M1-C51-20	007	IRM Range Switch H	Q	IRM-C51-1K601H	Q	
NM1PE4101	M1-C51-19	022	Aux Trip Unit AR12 (See App H for Eval.)	Q	NR-C51-1R603D	Non Class 1E	
NM1PE4103	M1-C51-19	018	Aux Trip Unit AR12 (See App H for Eval.)	Q	NR-C51-1R603B	Non Class 1E	

R1

Q Loads in Contact with RR-D12-0R609, 0R610, 1R605, 1R607, 1R608

CABLES	DWG	SH	FROM	SEPGR(FRM)	TO	SEPGR(TO)	ISOLATED
NM1PE4103	M1-C51-19	018	Aux Trip Unit AR12 (See App H for Eval.)	Q	NR-C51-1R603B	Non Class 1E	
NM1PE4109	M1-C51-19	012	Aux Trip Unit AR31 (See App H for Eval.)	Q	NR-C51-1R603A	Non Class 1E	
NM1PE4109	M1-C51-19	014	Aux Trip Unit AR32 (See App H for Eval.)	Q	NR-C51-1R603B	Non Class 1E	
NM1PE4110	M1-C51-19	016	Aux Trip Unit AR41 (See App H for Eval.)	Q	NR-C51-1R603A	Non Class 1E	
NM1PE4111	M1-C51-19	020	Aux Trip Unit AR51 (See App H for Eval.)	Q	NR-C51-1R603C	Non Class 1E	
NM1PE4111	M1-C51-19	033	Driver Card Z33 (See App H for Eval.)	Q	NR-C51-1R603C	Non Class 1E	
NM1PE4112	M1-C51-19	033	Driver Card (See App H for Eval.)	Q	NR-C51-1R603C	Non Class 1E	
NM1PE4215	M1-C51-19	015	LPRM Card Dry Contact	Q	Indicating Light	Non Class 1E	Contact to Coil
NM1PE4215	M1-C51-19	015	LPRM Card Dry Contact	Q	Indicating Light	Non Class 1E	Contact to Coil
NM1PE4216	M1-C51-19	010	LPRM CARD Z11	Q	Indicating Lights	Non Class 1E	Contact to Coil
NM1PE4218	M1-C51-19	027	LPRM Card Dry Contact	Q	Indicating Light	Non Class 1E	Contact to Coil
NM1PE4219	M1-C51-19	027	LPRM Card Dry Contact	Q	Indicating Light	Non Class 1E	Contact to Coil
NM1PE4223	M1-C51-19	011	LPRM Card Dry Contact	Q	Indicating Light	Non Class 1E	Contact to Coil
NM1PE4224	M1-C51-19	011	LPRM Card Dry Contact	Q	Indicating Light	Non Class 1E	Contact to Coil
NM1PE4238	M1-C51-19	017	LPRM Card Dry Contact	Q	Indicating Light	Non Class 1E	Contact to Coil
NM1PE4239	M1-C51-19	017	LPRM Card Dry Contact	Q	Indicating Light	Non Class 1E	Contact to Coil
NM1PE4245	M1-C51-19	019	LPRM Card Dry Contact	Q	Indicating Light	Non Class 1E	Contact to Coil
NM1PK0602	J-475	001	RISHH-D12-1K609A (See App G for Eval.)	Q	RR-D12-1R605	Non Class 1E	
NM1PK0602	J-475	002	RISHH-D12-1K615A (See App G for Eval.)	Q	RR-D12-1R607	Non Class 1E	

R1

Q Loads in Contact with RR-D12-0R609, 0R610, 1R605, 1R607, 1R608

CABLES	DWG	SH	FROM	SEPGR(FRM)	TO	SEPGR(T0)	ISOLATED
NM1PK0602	J-475	003	RISHH-D12-1K616A (See App G for Eval.)	Q	RR-D12-1R608	Non Class 1E	
NM1PK0602	J-478	001	RISHH-D12-0K617A (See App G for Eval.)	Q	RR-D12-0R609	Non Class 1E	
NM1PK0602	J-478	002	RISHH-D12-0K618A (See App G for Eval.)	Q	RR-D12-0R610	Non Class 1E	
NM1PK0603	J-439	009	RY-13962C (Isoaltion Device)	Q	RR-D12-1R603	Non Class 1E	YES
NM1PK3301	J-439	008	RY-13962B (Isoaltion Device)	Q	RR-D12-1R603	Non Class 1E	YES
NM1PK3301	J-439	010	RY-13962D (Isoaltion Device)	Q	RR-D12-1R603	Non Class 1E	YES
NM1PPF101	J-444	009	FY-G33-1K602 (See App F for eval.)	Q	FI-G33-1R609	Non Class 1E	
NM1PPF101	J-444	009	FY-G33-1K605 (See App F for eval.)	Q	FI-G33-1R602	Non Class 1E	
NM1PPF101	J-444	009	FY-G33-1K605 (See App F for eval.)	Q	FI-G33-1R602	Non Class 1E	
NM1PQ4101	M1-C51-20	006	C51-1K601E (IRM Mon See App H for Eval.)	Q	NR-C51-1R603C	Non Class 1E	
NM1PQ4101	M1-C51-20	006	C51-1K601A (IRM Mon See App H for Eval.)	Q	NR-C51-1R603A	Non Class 1E	
NM1PQ4102	M1-C51-20	006	C51-1K601G (IRM Mon See App H for Eval.)	Q	NR-C51-1R603C	Non Class 1E	
NM1PQ4102	M1-C51-20	006	C51-1K601C (IRM Mon See App H for Eval.)	Q	NR-C51-1R603A	Non Class 1E	
NM1PR4101	M1-G33-153	004	FT-G33-1N037 (Press Boundary)	Q	FI-G33-1R610	Non Class 1E	
NM1Q0045L	J-457	015	NIT-15725A (Isolation Device)	Q	Computer Input NM118	Non Class 1E	YES
NM1Q0045L	J-457	015	NIT-15725A (Isolation Device)	Q	Computer Input NM602	Non Class 1E	YES
NM1Q0045M	J-457	015	NIT-15725A (Isolation Device)	Q	SPDS Input NM6002Z	Non Class 1E	YES
NM1Q0048L	J-457	016	NIT-15725B (Isolation Device)	Q	Computer Input NM117	Non Class 1E	YES
NM1Q0048L	J-457	016	NIT-15725B (Isolation Device)	Q	Computer Input	Non Class 1E	YES

R1

Q Loads in Contact with RR-D12-0R609, 0R610, 1R605, 1R607, 1R608

CABLES	DWG	SH	FROM	SEPGR(FRM)	TO	SEPGR(TO)	ISOLATED
NM1Q0048L	J-457	016	NIT-15725B (Isolation Device)	Q	Computer Input NM601	Non Class 1E	YES
NM1Q0048M	J-457	016	NIT-15725B (Isolation Device)	Q	SPDS Input NM6001Z	Non Class 1E	YES
NM1Q0048M	J-457	016	NIT-15725B (Isolation Device)	Q	Computer Input	Non Class 1E	YES
NM1Q0835F	E-304	018	PDT-C32-1N004C (Press Boundary)	Q	SPDS-NFL-003Z	Non Class 1E	
NM1Q0835F	E-304	018	PT-C32-1N008 (Press Boundary)	Q	SPDS-NFP-001Z	Non Class 1E	
NM1Q0835F	E-304	018	PT-C32-1N005 (Press Boundary)	Q	SPDS-NFP-002Z	Non Class 1E	
NM1Q0835F	E-304	018	PDT-C32-1N004A (Press Boundary)	Q	SPDS-NFL-001Z	Non Class 1E	
NM1Q0835F	E-304	018	PDT-C32-1N004B (Press Boundary)	Q	SPDS-NFL-002Z	Non Class 1E	
NM1Q0835F	E-304	018	PDT-C32-1N017 (Press Boundary)	Q	SPDS-NFL-004Z	Non Class 1E	R1
NM1Q4239E	E-304	020	PT-15728A (Press Boundary)	Q	SPDS-MAP001Z	Non Class 1E	YES
NM1Q4239E	E-304	020	PT-15702 (Press Boundary)	Q	SPDS-MAP007Z	Non Class 1E	
NM2E02021	E-005	001	Ch B (AT-20201 (Transducer))	Q	Computer Input ETI42	Non Class 1E	
NM2E02022	E-005	001	Ch A (AT-20101 (Transducer))	Q	Computer Input ETI41	Non Class 1E	
NM2E02022	E-005	001	Ch A (VT-20101 (Transducer))	Q	Computer Input ETE41	Non Class 1E	
NM2E02022	E-005	001	Ch A (VT-20105 (Transducer))	Q	Computer Input EBE41	Non Class 1E	
NM2E02022	E-005	001	Ch A (VT-20110 (Transducer))	Q	Computer Input ETE91	Non Class 1E	
NM2E02022	E-005	001	Ch A (AT-20104 (Transducer))	Q	Computer Input EGI01	Non Class 1E	
NM2E02022	E-005	001	Ch A (AT-20109 (Transducer))	Q	Computer Input ETI91	Non Class 1E	
NM2E02023	E-005	001	Ch B (AT-20209 (Transducer))	Q	Computer Input ETI92	Non Class 1E	

Q Loads in Contact with RR-D12-0R609, 0R610, 1R605, 1R607, 1R608

CABLES	DWG	SH	FROM	SEPGR(FRM)	TO	SEPGR(TO)	ISOLATED
NM2E02023	E-005	001	Ch B (VT-20205 (Transducer))	Q	Computer Input EBE42	Non Class 1E	
NM2E02023	E-005	001	Ch C (AT-20304 (Transducer))	Q	Computer Input EGI04	Non Class 1E	
NM2E02023	E-005	001	Ch C (AT-20301 (Transducer))	Q	Computer Input ETI43	Non Class 1E	
NM2E02023	E-005	001	Ch C (VT-20305 (Transducer))	Q	Computer Input EBE43	Non Class 1E	
NM2E02023	E-005	001	Ch C (VT-20302 (Transducer))	Q	Computer Input ETE42	Non Class 1E	
NM2E02024	E-005	001	Ch C (AT-20309 (Transducer))	Q	Computer Input ETI93	Non Class 1E	
NM2E02024	E-005	001	Ch B (AT-20204 (Transducer))	Q	Computer Input EGI02	Non Class 1E	
NM2E02024	E-005	001	Ch D (AT-20401 (Transducer))	Q	Computer Input ETI44	Non Class 1E	
NM2E02024	E-005	001	Ch D (VT-20405 (Transducer))	Q	Computer Input EBE44	Non Class 1E	
NM2E02024	E-005	001	Ch D (AT-20404 (Transducer))	Q	Computer Input EGI04	Non Class 1E	
NM2E02024	E-005	001	Ch D (AT-20409 (Transducer))	Q	Computer Input ETI94	Non Class 1E	
NM2E02024	E-005	001	Ch C (VT-20310 (Transducer))	Q	Computer Input ETE92	Non Class 1E	
NM2E02025	E-005	004	XY-42411 (Isoaltion Device)	Q	Computer Input EGJ02	Non Class 1E	YES
NM2E02025	E-005	004	XY-42409 (Isoaltion Device)	Q	Computer Input EGE02	Non Class 1E	YES
NM2E02025	E-005	004	XY-42412(Isoaltion Device)	Q	Computer Input EGE01	Non Class 1E	YES
NM2E02025	E-005	004	XY-42408 (Isoaltion Device)	Q	Computer Input EGU05	Non Class 1E	YES
NM2E02025	E-005	004	XY-42407Isoaltion Device)	Q	Computer Input EGJ01	Non Class 1E	YES
NM2E02025	E-005	004	XY-424010(Isoaltion Device)	Q	Computer Input EGU06	Non Class 1E	YES
NM2E02026	E-005	004	XY-42405 (Isoaltion Device)	Q	Computer Input EGJ03	Non Class 1E	YES

R1

Q Loads in Contact with RR-D12-0R609, 0R610, 1R605, 1R607, 1R608

CABLES	DWG	SH	FROM	SEPGR(FRM)	TO	SEPGR(TO)	ISOLATED
NM2E02026	E-005	004	XY-42401 (Isoaltion Device)	Q	Computer Input EGJ04	Non Class 1E	YES
NM2E02026	E-005	004	XY-42406 (Isoaltion Device)	Q	Computer Input EGU07	Non Class 1E	YES
NM2E02026	E-005	004	XY-42403 (Isoaltion Device)	Q	Computer Input EGU08	Non Class 1E	YES
NM2E02026	E-005	004	XY-42402 (Isoaltion Device)	Q	Computer Input EGE03	Non Class 1E	YES
NM2E02026	E-005	004	XY-42404 (Isoaltion Device)	Q	Computer Input EGE04	Non Class 1E	YES

R1

Q Loads in Contact with NR-C51-1R603A

CABLES	DWG	SH	FROM	SEPGR(FRM)	TO	SEPGR(TO)	ISOLATED
FK1P33104	M1-B21-129	008	Div II (Dry Contact)	Q	Indicating Lights	Q	
NK1C51011	M1-C51-20	012	Aux Unit Z2C	Q	IRM Det Position	Non Class 1E	Contact to Coil
NK1PD4205	M1-C51-19	018	IRM AUX UNIT (See App H for Eval.)	Q	NR-C51-1R603B	Non Class 1E	
NK1PE4244	M1-C51-19	039	Relays	Q	Dry Contact	NA	Contact to Coil
NK1PE4289	M1-C51-19	039	Relays	Q	Dry Contact	NA	Contact to Coil
NK1Q0029A	E-304	036	SVX1-157104 (Isolation Relay)	Q	SPDS-NCZ120Z	Non Class 1E	YES
NK1Q0029A	E-304	036	SVX2-157104 (Isolation Relay)	Q	SPDS-NCZ620Z	Non Class 1E	YES
NK1Q0029A	E-304	036	SVX2-157100B (Isolation Relay)	Q	SPDS-NCZ616Z	Non Class 1E	YES
NK1Q0029A	E-304	036	SVX1-157104 (Isolation Relay)	Q	SPDS-NCZ122Z	Non Class 1E	YES
NK1Q0029A	E-304	036	SVX1-157102A (Isolation Relay)	Q	SPDS-NCZ614Z	Non Class 1E	YES
NK1Q0029A	E-304	036	SVX1-157100B (Isolation Relay)	Q	SPDS-NCZ116Z	Non Class 1E	YES
NK1Q0029A	E-304	036	SVX1-157100A (Isolation Relay)	Q	SPDS-NCZ612Z	Non Class 1E	YES
NK1Q0029A	E-304	036	SVX1-157100A (Isolation Relay)	Q	SPDS-NCZ114Z	Non Class 1E	YES
NK1Q0029A	E-304	036	SVX1-1571002A (Isolation Relay)	Q	SPDS-NCZ118Z	Non Class 1E	YES
NK1Q0029A	E-304	036	SVX2-1571002B (Isolation Relay)	Q	SPDS-NCZ618Z	Non Class 1E	YES
NK1Q0029B	E-304	036	SVX2-157104 (Isolation Relay)	Q	SPDS-NCZ622Z	Non Class 1E	YES
NK1Q0053A	J-439	007	RY-13961C (Isolation Device)	Q	ES-G33-1K601	Non Class 1E	YES
NK1Q4243M	E-304	002A	Relay k 60 Dry Contact	Q	SPDS-NIZ002Z	Non Class 1E	Contact to Coil
NM1A0403G	E-023	001	Ch C (VT-20301 (Transducer))	Q.	Computer Input ETE42	Non Class 1E	

R1

CABLES	DWG	SH	FROM	SEPGR(FRM)	TO	SEPGR(TO)	ISOLATED
NM1B21006	M1-B21-128	003	LITS-B21-1N026D (Mech Sw See App C for Eval.)	Q	LI-B21-1R604	Non Class 1E	
NM1B21006	M1-B21-128	003	LT-B21-1N027 (Press Boundary)	Q	LI-B21-1R605	Non Class 1E	
NM1B21007	M1-B21-94	002	FT-B21-1N034K (Press Boundary)	Q	PDI-B21-1R608K	Non Class 1E	
NM1B21007	M1-B21-94	002	FT-B21-1N034M (Press Boundary)	Q	PDI-B21-1R608M	Non Class 1E	
NM1B21007	M1-B21-94	002	FT-B21-1N034P (Press Boundary)	Q	PDI-B21-1R608P	Non Class 1E	
NM1B21007	M1-B21-94	002	FT-B21-1N034S (Press Boundary)	Q	PDI-B21-1R608S	Non Class 1E	
NM1B21008	M1-B21-94	001	FT-B21-1N033A (Press Boundary)	Q	FY-B21-1K605A	Non Class 1E	
NM1B21008	M1-B21-94	001	FT-B21-1N033C (Press Boundary)	Q	FY-B21-1K605C	Non Class 1E	
NM1B21008	M1-B21-94	001	FT-B21-1N034B (Press Boundary)	Q	PDI-B21-1R608B	Non Class 1E	R1
NM1B21008	M1-B21-94	002	FT-B21-1N034F (Press Boundary)	Q	PDI-B21-1R608F	Non Class 1E	
NM1B21008	M1-B21-94	002	FT-B21-1N034H (Press Boundary)	Q	PDI-B21-1R608H	Non Class 1E	
NM1B21008	M1-B21-94	002	FT-B21-1N034D (Press Boundary)	Q	PDI-B21-1R608D	Non Class 1E	
NM1B21009	M1-B21-94	001	FT-B21-1N033A (Press Boundary)	Q	FY-B21-1K605A	Non Class 1E	
NM1B21010	M1-B21-94	001	FT-B21-1N033B (Press Boundary)	Q	FY-B21-1K605B	Non Class 1E	
NM1B21010	M1-B21-94	001	FT-B21-1N033D (Press Boundary)	Q	FY-B21-1K605D	Non Class 1E	
NM1B21010	M1-B21-94	002	FT-B21-1N034G (Press Boundary)	Q	PDI-B21-1R608G	Non Class 1E	
NM1B21010	M1-B21-94	002	FT-B21-1N034A (Press Boundary)	Q	PDI-B21-1R608A	Non Class 1E	
NM1B21010	M1-B21-94	002	FT-B21-1N034C (Press Boundary)	Q	PDI-B21-1R608C	Non Class 1E	
NM1B21010	M1-B21-94	002	FT-B21-1N034E (Press Boundary)	Q	PDI-B21-1R608E	Non Class 1E	

Q Loads in Contact with NR-C51-1R603A

CABLES	DWG	SH	FROM	SEPGR(FRM)	TO	SEPGR(TO)	ISOLATED
NM1B21011	M1-B21-94	001	PDT-B21-1N032 (Press Boundary)	Q	XR-B21-1R613	Non Class 1E	
NM1C32001	M1-C32-17	006	PDT-C32-1N004A (Press Boundary)	Q	Computer Analog Input	Non Class 1E	
NM1C32001	M1-C32-17	006	PT-C32-1N005 (Press Boundary)	Q	Computer Analog Input	Non Class 1E	
NM1C51009	M1-C51-19	044	LPRM	Q	Computer Analog Input	Non Class 1E	
NM1C51010	M1-C51-19	044	LPRM	Q	Computer Analog Input	Non Class 1E	
NM1C51011	M1-C51-19	044	LPRM	Q	Computer Analog Input	Non Class 1E	
NM1C51013	M1-C51-19	044	LPRM	Q	Computer Analog Input	Non Class 1E	
NM1C51016	M1-C51-19	044	LPRM	Q	Computer Analog Input	Non Class 1E	
NM1C51017	M1-C51-19	044	LPRM	Q	Computer Analog Input	Non Class 1E	R1
NM1C51018	M1-C51-19	044	LPRM	Q	Computer Analog Input	Non Class 1E	
NM1C51020	M1-C51-19	044	LPRM	Q	Computer Analog Input	Non Class 1E	
NM1C51021	M1-C51-19	044	LPRM	Q	Computer Analog Input	Non Class 1E	
NM1C51023	M1-C51-19	044	LPRM	Q	Computer Analog Input	Non Class 1E	
NM1C51024	M1-C51-19	044	LPRM	Q	Computer Analog Input	Non Class 1E	
NM1C51026	M1-C51-19	044	LPRM	Q	Computer Analog Input	Non Class 1E	
NM1C51027	M1-C51-19	044	LPRM	Q	Computer Analog Input	Non Class 1E	
NM1C51029	M1-C51-19	044	LPRM	Q	Computer Analog Input	Non Class 1E	
NM1C51030	M1-C51-19	044	LPRM	Q	Computer Analog Input	Non Class 1E	
NM1C51032	M1-C51-19	044	LPRM	Q	Computer Analog Input	Non Class 1E	

Q Loads in Contact with NR-C51-1R603A

CABLES	DWG	SH	FROM	SEPGR(FRM)	TO	SEPGR(TO)	ISOLATED
NM1C51045	M1-C51-20	012	Aux Unit Z2C	Q	IRM Det Position	Non Class 1E	Contact to Coil
NM1C94117	M1-C51-19	033	Driver Card	Q	Computer Analog Input	Non Class 1E	
NM1C94118	M1-C51-19	033	Driver Card	Q	Computer Analog Input	Non Class 1E	
NM1F0203E	E-304	017	PDT-B21-1N032 (Press Boundary)	Q	SPDS NJP051Z	Non Class 1E	
NM1F0203F	E-304	017	LITS-B21-IN026D (Mech Sw See App C for Eval.)	Q	SPDS NBL002Z	Non Class 1E	
NM1I4202L	J-442	002	LY-14202A (Isolation Device)	Q	Computer Input	Non Class 1E	YES
NM1I4801C	J-448	002	R.G. 1.97 Cat 2 (FT-14806 See App I for Eval.)	Q	R.G. 1.97 Cat 2 (LI/FI 14806)	Q	
NM1I4801D	J-448	001	R.G. 1.97 Cat 2 (FE-14806 See App I for Eval.)	Q	R.G. 1.97 Cat 2 (FT-14806)	Q	
NM1I4801E	J-448	001	R.G. 1.97 Cat 2 (FE-14806 See App I for Eval.)	Q	R.G. 1.97 Cat 2 (FT-14806)	Q	
NM1I4801F	J-448	001	XY-14806 (Isolation Device)	Q	Computer Input NXF01	Non Class 1E	YES
NM1P11901	M1-B21-128	003	LT-B21-1N027 (Pressure Boundary)	Q	LI-B21-1R605	Non Class 1E	
NM1P14101	M1-B21-128	003	PDT-B31-1N015A (Press Boundary)	Q	PDI-B31-1R612A	Non Class 1E	
NM1P14101	M1-B21-128	003	PDT-B31-1N015B (Press Boundary)	Q	PDI-B31-1R612B	Non Class 1E	
NM1P1F101	M1-B21-128	003	LITS-B21-1N026D (Mech Sw See App C for Eval.)	Q	LI-B21-1R604	Non Class 1E	
NM1P91601	M1-C12-110	016	APRM Trip Unit Contacts	Q	Isolator Card Z1	Non Class 1E	Contact to Coil
NM1P91603	M1-C12-110	015	APRM Trip Unit Contacts	Q	Isolator Card Z1	Non Class 1E	Contact to Coil
NM1PB4102	J-406	011	PDT-C32-1N004B (Press Boundary)	Q	LI-C32-1R606B	Non Class 1E	
NM1PB4102	J-406	012	PDT-C32-1N004A (Press Boundary)	Q	LI-C32-1R606A	Non Class 1E	
NM1PB4102	J-406	024	PT-C32-1N005 (Press Boundary)	Q	PI-C32-1R605	Non Class 1E	

R1

Q Loads in Contact with NR-C51-1R603A

CABLES	DWG	SH	FROM	SEPGR(FRM)	TO	SEPGR(TO)	ISOLATED
NM1PB4103	J-406	013	PDT-C32-1N017 (Press Boundary)	Q	LR-C32-1R608	Non Class 1E	
NM1PB4105	M1-C32-17	003	PT-C32-1N008 (Press Boundary)	Q	FR-C32-1R609	Non Class 1E	
NM1PC1301	J-448	003	R.G. 1.97 Cat 2 (LI/FI-14806 See App I for Eval.)	Q	LT-C41-1N001	Non Class 1E	
NM1PD4206	M1-C51-20	006	IRM Range Sw E	Q	C51-1K601E (IRM Mon)	Q	
NM1PD4213	M1-C51-20	006	IRM Range Sw C	Q	C51-1K601C (IRM Mon)	Q	
NM1PD4217	M1-C51-20	006	IRM Range Sw A	Q	C51-1K601A (IRM Mon)	Q	
NM1PD4X01	M1-C51-20	007	C51-1K601B (IRM Mon See App H for Eval.)	Q	NR-C51-1R603B	Non Class 1E	
NM1PD4X01	M1-C51-20	007	C51-1K601F (IRM Mon See App H for Eval.)	Q	NR-C51-1R603D	Non Class 1E	
NM1PD4X02	M1-C51-20	007	C51-1K601D (IRM Mon See App H for Eval.)	Q	NR-C51-1R603B	Non Class 1E	R1
NM1PD4X02	M1-C51-20	007	C51-1K601H (IRM Mon See App H for Eval.)	Q	NR-C51-1R603D	Non Class 1E	
NM1PDF206	M1-C51-20	007	IRM Range Switch B	Q	IRM-C51-1K601B	Q	
NM1PDF207	M1-C51-20	007	IRM Range Switch F	Q	IRM-C51-1K601F	Q	
NM1PDF212	M1-C51-20	007	IRM Range Switch D	Q	IRM-C51-1K601D	Q	
NM1PDF213	M1-C51-20	007	IRM Range Switch H	Q	IRM-C51-1K601H	Q	
NM1PE4101	M1-C51-19	022	Aux Trip Unit AR12 (See App H for Eval.)	Q	NR-C51-1R603D	Non Class 1E	
NM1PE4103	M1-C51-19	018	Aux Trip Unit AR12 (See App H for Eval.)	Q	NR-C51-1R603B	Non Class 1E	
NM1PE4109	M1-C51-19	012	Aux Trip Unit AR31 (See App H for Eval.)	Q	NR-C51-1R603A	Non Class 1E	
NM1PE4109	M1-C51-19	014	Aux Trip Unit AR32 (See App H for Eval.)	Q	NR-C51-1R603B	Non Class 1E	
NM1PE4110	M1-C51-19	016	Aux Trip Unit AR41 (See App H for Eval.)	Q	NR-C51-1R603A	Non Class 1E	

Q Loads in Contact with NR-C51-1R603A

CABLES	DWG	SH	FROM	SEPGR(FRM)	TO	SEPGR(TO)	ISOLATED
NM1PE4111	M1-C51-19	020	Aux Trip Unit AR51 (See App H for Eval.)	Q	NR-C51-1R603C	Non Class 1E	
NM1PE4111	M1-C51-19	033	Driver Card Z33 (See App H for Eval.)	Q	NR-C51-1R603C	Non Class 1E	
NM1PE4112	M1-C51-19	033	Driver Card (See App H for Eval.)	Q	NR-C51-1R603C	Non Class 1E	
NM1PE4215	M1-C51-19	015	LPRM Card Dry Contact	Q	Indicating Light	Non Class 1E	Contact to Coil
NM1PE4216	M1-C51-19	010	LPRM CARD Z11	Q	Indicating Lights	Non Class 1E	Contact to Coil
NM1PE4218	M1-C51-19	027	LPRM Card Dry Contact	Q	Indicating Light	Non Class 1E	Contact to Coil
NM1PE4219	M1-C51-19	027	LPRM Card Dry Contact	Q	Indicating Light	Non Class 1E	Contact to Coil
NM1PE4223	M1-C51-19	011	LPRM Card Dry Contact	Q	Indicating Light	Non Class 1E	Contact to Coil
NM1PE4224	M1-C51-19	011	LPRM Card Dry Contact	Q	Indicating Light	Non Class 1E	Contact to Coil
NM1PE4238	M1-C51-19	017	LPRM Card Dry Contact	Q	Indicating Light	Non Class 1E	Contact to Coil
NM1PE4239	M1-C51-19	017	LPRM Card Dry Contact	Q	Indicating Light	Non Class 1E	Contact to Coil
NM1PE4245	M1-C51-19	019	LPRM Card Dry Contact	Q	Indicating Light	Non Class 1E	Contact to Coil
NM1PE4267	M1-C51-19	013	APRM Card	Q	Indicating Lights	Non Class 1E	Contact to Coil
NM1PE4268	M1-C51-19	013	APRM Card	Q	Indicating Light	Non Class 1E	Contact to Coil
NM1PE4279	M1-C51-19	040	Flow Unit C	Q	Indicating Light	Non Class 1E	Contact to Coil
NM1PE4280	M1-C51-19	025	Relay Contacts	Q	Indicating Lights	Non Class 1E	Contact to Coil
NM1PE4283	M1-C51-19	025	Relay Contacts	Q	Indicating Lights	Non Class 1E	Contact to Coil
NM1PK0602	J-475	001	RISHH-D12-1K609A (See App G for Eval.)	Q	RR-D12-1R605	Non Class 1E	
NM1PK0602	J-475	002	RISHH-D12-1K615A (See App G for Eval.)	Q	RR-D12-1R607	Non Class 1E	

R1

Q Loads in Contact with NR-C51-1R603A

CABLES	DWG	SH	FROM	SEPGR(FRM)	TO	SEPGR(TO)	ISOLATED
NM1PK0602	J-475	003	RISHH-D12-1K616A (See App G for Eval.)	Q	RR-D12-1R608	Non Class 1E	
NM1PK0602	J-478	001	RISHH-D12-0K617A (See App G for Eval.)	Q	RR-D12-0R609	Non Class 1E	
NM1PK0602	J-478	002	RISHH-D12-0K618A (See App G for Eval.)	Q	RR-D12-0R610	Non Class 1E	
NM1PK0603	J-439	009	RY-13962C (Isoaltion Device)	Q	RR-D12-1R603	Non Class 1E	YES
NM1PK3301	J-439	008	RY-13962B (Isoaltion Device)	Q	RR-D12-1R603	Non Class 1E	YES
NM1PK3301	J-439	010	RY-13962D (Isoaltion Device)	Q	RR-D12-1R603	Non Class 1E	YES
NM1PK3302	J-475	001	RISHH-D12-1K609A (See App G for Eval.)	Q	RR-D12-1R605	Non Class 1E	
NM1PK3302	J-475	005	RISHH-D12-1K615B (See App G for Eval.)	Q	RR-D12-1R607	Non Class 1E	
NM1PK3302	J-475	005	RISHH-D12-0K618A (See App G for Eval.)	Q	RR-D12-0R610	Non Class 1E	
NM1PK3302	J-475	006	RISHH-D12-1K616B (See App G for Eval.)	Q	RR-D12-1R608	Non Class 1E	
NM1PK3302	J-478	001	RISHH-D12-0K617A (See App G for Eval.)	Q	RR-D12-0R609	Non Class 1E	
NM1PQ4101	M1-C51-20	006	C51-1K601A (IRM Mon See App H for Eval.)	Q	NR-C51-1R603A	Non Class 1E	
NM1PQ4101	M1-C51-20	006	C51-1K601E (IRM Mon See App H for Eval.)	Q	NR-C51-1R603C	Non Class 1E	
NM1PQ4102	M1-C51-20	006	C51-1K601C (IRM Mon See App H for Eval.)	Q	NR-C51-1R603A	Non Class 1E	
NM1PQ4102	M1-C51-20	006	C51-1K601G (IRM Mon See App H for Eval.)	Q	NR-C51-1R603C	Non Class 1E	
NM1PR4101	M1-G33-153	004	FT-G33-1N037 (Press Boundary)	Q	FI-G33-1R610	Non Class 1E	
NM1PR7N01	M1-G33-153	004	FY-14476 (Isolation Device)	Q	Computer Analog Input	Non Class 1E	YES
NM1Q0045L	J-457	015	NIT-15725A (Isolation Device)	Q	Computer Input NM118	Non Class 1E	YES
NM1Q0045L	J-457	015	NIT-15725A (Isolation Device)	Q	Computer Input NM602	Non Class 1E	YES

R1

Q Loads in Contact with NR-C51-1R603A

CABLES	DWG	SH	FROM	SEPGR(FRM)	TO	SEPGR(TO)	ISOLATED
NM1Q0045M	J-457	015	NIT-15725A (Isolation Device)	Q	SPDS Input NM6002Z	Non Class 1E	YES
NM1Q0048L	J-457	016	NIT-15725B (Isolation Device)	Q	Computer Input	Non Class 1E	YES
NM1Q0048L	J-457	016	NIT-15725B (Isolation Device)	Q	Computer Input NM117	Non Class 1E	YES
NM1Q0048L	J-457	016	NIT-15725B (Isolation Device)	Q	Computer Input NM601	Non Class 1E	YES
NM1Q0048M	J-457	016	NIT-15725B (Isolation Device)	Q	Computer Input	Non Class 1E	YES
NM1Q0048M	J-457	016	NIT-15725B (Isolation Device)	Q	SPDS Input NM6001Z	Non Class 1E	YES
NM1Q1217L	E-304	017	XY-14201F (Isolation Device)	Q	SPDS NM5006Z	Non Class 1E	YES
NM1Q1217M	E-304	017	XY-14201B (Isolation Device)	Q	SPDS NM5002Z	Non Class 1E	YES
NM1Q1217M	E-304	017	XY-14201A (Isolation Device)	Q	SPDS NM5001Z	Non Class 1E	YES
NM1Q1217N	E-304	017	XY-14201D (Isolation Device)	Q	SPDS NM5004Z	Non Class 1E	YES
NM1Q1217P	E-304	017	XY-14201C (Isolation Device)	Q	SPDS NM5003Z	Non Class 1E	YES
NM1Q1217Q	E-304	017	XY-14201E (Isolation Device)	Q	SPDS NM5005Z	Non Class 1E	YES
NM1Q1217R	M1-C51-19	012	XY-14201A (Isolation Device)	Q	PME2 (Power Supply)	Non Class 1E	YES
NM1Q1217S	M1-C51-19	014	XY-14201B (Isolation Device)	Q	PME2 (Power Supply)	Non Class 1E	YES
NM1Q1217T	M1-C51-19	016	XY-14201C(Isolation Device)	Q	PME2 (Power Supply)	Non Class 1E	YES
NM2M0109C	J-411	001	XY-01109A1 (Isolation Device)	Q	Computer Analog Input	Non Class 1E	YES
NM2M0110C	J-411	003	XY-01109B1 (Isolation Device)	Q	Computer Input	Non Class 1E	YES

R1

Q Loads in Contact with NR-C51-1R603B

CABLES	DWG	SH	FROM	SEPGR(FRM)	TO	SEPGR(TO)	ISOLATED
FK1B21004	M1-B21-129	003	Div II (LIS-B21-1N031D)	Q	Div II (K113D)	Q	
FK1B21004	M1-B21-129	003	Div II (PS-E11-1N010D)	Q	Div II (K3B)	Q	
FK1B21004	M1-B21-129	003	Div II (LIS-B21-1N031B)	Q	Div II (K113B)	Q	
FK1B21004	M1-B21-129	005	Div II (SV-14113M2)	Q	Div II (K19B)	Q	
FK1B21004	M1-B21-129	005	Div II (SV-14113N2)	Q	Div II (K20B)	Q	
FK1B21005	M1-B21-129	003	Div II (LIS-B21-1N042B)	Q	Div II (K12B)	Q	
FK1B21005	M1-B21-129	003	Div II (PS-E11-1N016D)	Q	Div II (K10B)	Q	
FK1B21005	M1-B21-129	003	Div II (PS-E11-1N020B)	Q	Div II (K10B)	Q	
FK1B21005	M1-B21-129	003	Div II (PS-E21-1N008B)	Q	Div II (K10B)	Q	
FK1B21005	M1-B21-129	003	Div II (SV-14113G2)	Q	Div II (K15B)	Q	
FK1B21005	M1-B21-129	003	Div II (SV-14113J2)	Q	Div II (K4B)	Q	
FK1B21005	M1-B21-129	003	Div II (SV-14113K2)	Q	Div II (K17B)	Q	
FK1B21005	M1-B21-129	003	Div II (SV-14113L2)	Q	Div II (K18B)	Q	
FK1B21006	M1-B21-129	003	Div II (PS-E11-1N009B)	Q	Div II (K9B)	Q	
FK1B21006	M1-B21-129	003	Div II (PS-E11-1N010B)	Q	Div II (K2B)	Q	
FK1B21006	M1-B21-129	003	Div II (PS-E11-1N016B)	Q	Div II (K9B)	Q	
FK1B21007	M1-B21-129	003	Div II (PS-E11-1N020D)	Q	Div II (K9B)	Q	
FK1P33101	M1-B21-129	003	Div II (PS-E11-1N010B)	Q	Div II (K2B)	Q	
FK1P33102	M1-B21-129	005	Div II (1D624-1i)	Q	Indicating Light	Q	

R1

CABLES	DWG	SH	FROM	SEPGR(FRM)	TO	SEPGR(TO)	ISOLATED
FK1P33104	M1-B21-129	008	Div II (Dry Contact)	Q	Indicating Lights	Q	
FK1Q0628G	E-304	002	Div II (HV-15768)	Q	Div II (Iso Mux XIT-15701B)	Q	
FK1Q0838E	E-304	007	Div II (HV-E21-1F015B)	Q	Div II (Iso Mux XIT-15701B)	Q	
FK1Q1333D	E-304	006	Div II (HV-E51-1F007)	Q	Div II (Iso Mux XIT-15701B)	Q	
FK1Q1333D	E-304	006	Div II (HV-E51-1F034)	Q	Div II (Iso Mux XIT-15701B)	Q	
FK1Q1333E	E-304	001	Div II (HV-E51-1F088)	Q	Div II (Iso Mux XIT-15701B)	Q	
FK1Q1551D	E-304	011	Div II (HV-B21-1F019)	Q	Div II (Iso Mux XIT-15701B)	Q	
FK1Q1551D	E-304	011	Div II (HV-B21-1F028D)	Q	Div II (Iso Mux XIT-15701B)	Q	R1
FK1Q1551E	E-304	011	Div II (SV-E11-1F080B)	Q	Div II (Iso Mux XIT-15701B)	Q	
FK1Q1551E	E-304	011	Div II SV-E11-1F080A)	Q	Div II (Iso Mux XIT-15701B)	Q	
FK1Q1551F	E-304	011	Div II (HV-B21-1F028A)	Q	Div II (Iso Mux XIT-15701B)	Q	
FK1Q1551F	E-304	011	Div II (HV-B21-1F028B)	Q	Div II (Iso Mux XIT-15701B)	Q	
FK1Q1551F	E-304	011	Div II (HV-B21-1F028C)	Q	Div II (Iso Mux XIT-15701B)	Q	
FK1Q1551F	E-304	011	Div II (HV-B21-1F028D)	Q	Div II (Iso Mux XIT-15701B)	Q	
FK1Q1551G	E-304	011	Div II (TIP BALL VALVE)	Q	Div II (Iso Mux XIT-15701B)	Q	
FK1Q4035D	E-304	008	Div II (HV-E41-1F003)	Q	Div II (Iso Mux XIT-15701B)	Q	
FK1Q4035D	E-304	008	Div II (HV-E41-1F075)	Q	Div II (Iso Mux XIT-15701B)	Q	
FK1Q4035F	E-304	008	Div II (HV-E41-1F042)	Q	Div II (Iso Mux XIT-15701B)	Q	
FK1Q4038A	E-304	008	Div II (HV-E11-1F024B)	Q	Div II (Iso Mux XIT-15701B)	Q	

Q Loads in Contact with NR-C51-1R603B

CABLES	DWG	SH	FROM	SEPGR(FRM)	TO	SEPGR(TO)	ISOLATED
FK1Q4038A	E-304	008	Div II (HV-E11-1F027B)	Q	Div II (Iso Mux XIT-15701B)	Q	
FK1Q4038A	E-304	008	Div II (HV-E11-1F016B)	Q	Div II (Iso Mux XIT-15701B)	Q	
FK1Q4038B	E-304	005	Div II (HV-E11-1F021B)	Q	Div II (Iso Mux XIT-15701B)	Q	
FK1Q4038D	E-304	007	Div II (HV-E11-1F008)	Q	Div II (Iso Mux XIT-15701B)	Q	
FK1Q4038E	E-304	007	Div II (HV-E11-1F008)	Q	Div II (Iso Mux XIT-15701B)	Q	
FK1Q4038F	E-304	012	Div II (HV-11346)	Q	Div II (Iso Mux XIT-15701B)	Q	
FK1Q4038G	E-304	014	Div II (SV-12605)	Q	Div II (Iso Mux XIT-15701B)	Q	
FK1Q4038G	E-304	014	Div II (SV-12644)	Q	Div II (Iso Mux XIT-15701B)	Q	
FK1Q4038G	E-304	014	Div II (SV-12649)	Q	Div II (Iso Mux XIT-15701B)	Q	R1
FK1Q4038H	E-304	014	Div II (SV-12605)	Q	Div II (Iso Mux XIT-15701B)	Q	
FK1Q4038J	E-304	014	Div II (HV-E11-1F015B)	Q	Div II (Iso Mux XIT-15701B)	Q	
FK1Q4038L	E-304	014	Div II (HV-15711)	Q	Div II (Iso Mux XIT-15701B)	Q	
FK1Q4038R	E-304	012	Div II (HV-11345)	Q	Div II (Iso Mux XIT-15701B)	Q	
FK1Q4190F	E-304	015	Div II (HV-15714)	Q	Div II (Iso Mux XIT-15701B)	Q	
FK1Q4190F	E-304	015	Div II (SV-15738)	Q	Div II (Iso Mux XIT-15701B)	Q	
FK1Q4190G	E-304	015	Div II (HV-15704)	Q	Div II (Iso Mux XIT-15701B)	Q	
FK1Q4190G	E-304	015	Div II (HV-15724)	Q	Div II (Iso Mux XIT-15701B)	Q	
FK1Q4190H	E-304	010	Div II (SV-15740B)	Q	Div II (Iso Mux XIT-15701B)	Q	
FK1Q4190H	E-304	010	Div II (SV-15742B)	Q	Div II (Iso Mux XIT-15701B)	Q	

Q Loads in Contact with NR-C51-1R603B

CABLES	DWG	SH	FROM	SEPGR(FRM)	TO	SEPGR(TO)	ISOLATED
FK1Q4190J	E-304	015	Div II (HV-15721)	Q	Div II (Iso Mux XIT-15701B)	Q	
FK1Q4190J	E-304	015	Div II (HV-15723)	Q	Div II (Iso Mux XIT-15701B)	Q	
FK1Q4190J	E-304	015	Div II (HV-15724)	Q	Div II (Iso Mux XIT-15701B)	Q	
FK1Q4190K	E-304	015	Div II (SV-15789)	Q	Div II (Iso Mux XIT-15701B)	Q	
FK1Q4190K	E-304	015	Div II (HV-15705)	Q	Div II (Iso Mux XIT-15701B)	Q	
FK1Q4190K	E-304	015	Div II (SV-15738)	Q	Div II (Iso Mux XIT-15701B)	Q	
FK1V2619D	E-304	005	Div II (HV-18792B2)	Q	Div II (Iso Mux XIT-15701B)	Q	
FK1V2619D	E-304	005	Div II (HV-18792B1)	Q	Div II (Iso Mux XIT-15701B)	Q	
FK1V2619D	E-304	005	Div II (HV-18782B1)	Q	Div II (Iso Mux XIT-15701B)	Q	
FK1V2619D	E-304	005	Div II (HV-18782B2)	Q	Div II (Iso Mux XIT-15701B)	Q	
FK1V2619E	E-304	002	Div II (HV-18781B1)	Q	Div II (Iso Mux XIT-15701B)	Q	
FK1V2619E	E-304	002	Div II (HV-18781B2)	Q	Div II (Iso Mux XIT-15701B)	Q	
FK1V2619F	E-304	002	Div II (HV-18791B1)	Q	Div II (Iso Mux XIT-15701B)	Q	
FK1V2619F	E-304	002	Div II (HV-18791B2)	Q	Div II (Iso Mux XIT-15701B)	Q	
FM1I4203K	J-442	003	Div II (PT-14203B)	Q	Div II (Iso Mux XIT-15701B)	Q	
FM1Q0835D	E-304	018	FT-E11-1N003B (Press Boundary))	Q	Div II (Iso Mux XIT-15701B)	Q	
FM1Q4190A	E-304	018	Div II (PT-15729B)	Q	Div II (Iso Mux XIT-15701B)	Q	
FM1Q4190K	E-304	016	Div II (TT-15790B)	Q	Div II (Iso Mux XIT-15701B)	Q	
FM1Q4190K	E-304	016	Div II (TT-15799B)	Q	Div II (Iso Mux XIT-15701B)	Q	

R1

Q Loads in Contact with NR-C51-1R603B

CABLES	DWG	SH	FROM	SEPGR(FRM)	TO	SEPGR(TO)	ISOLATED
FM1Q4190L	E-304	016	Div II (PT-15709B)	Q	Div II (Iso Mux XIT-15701B)	Q	
FM1Q4190L	E-304	016	Div II (PT-15710B)	Q	Div II (Iso Mux XIT-15701B)	Q	
FM1Q4190M	E-304	016	Div II (LT-15775B)	Q	Div II (Iso Mux XIT-15701B)	Q	
FM1Q4190M	E-304	016	Div II (LT-15776B)	Q	Div II (Iso Mux XIT-15701B)	Q	
FM1Q4236E	E-304	016	Div II (AR-15745B)	Q	Div II (Iso Mux XIT-15701B)	Q	
FM1Q4236E	E-304	016	Div II (AR-15746B)	Q	Div II (Iso Mux XIT-15701B)	Q	
FM1Q4236F	E-304	016	Div II (TX-15752)	Q	Div II (Iso Mux XIT-15701B)	Q	
FM1Q4238D	E-304	020	Div II (RY-15721B)	Q	Div II (Iso Mux XIT-15701B)	Q	
NK1PE4244	M1-C51-19	039	Relays	Q	Dry Contact	NA	Contact to Coil
NK1PE4289	M1-C51-19	039	Relays	Q	Dry Contact	NA	Contact to Coil
NM1A0403G	E-023	001	Ch C (VT-20301 (Transducer))	Q	Computer Input ETE42	Non Class 1E	
NM1C32001	M1-C32-17	006	PDT-C32-1N004A (Press Boundary)	Q	Computer Analog Input	Non Class 1E	
NM1C32001	M1-C32-17	006	PT-C32-1N005 (Press Boundary)	Q	Computer Analog Input	Non Class 1E	
NM1C51009	M1-C51-19	044	LPRM	Q	Computer Analog Input	Non Class 1E	
NM1C51010	M1-C51-19	044	LPRM	Q	Computer Analog Input	Non Class 1E	
NM1C51011	M1-C51-19	044	LPRM	Q	Computer Analog Input	Non Class 1E	
NM1C51013	M1-C51-19	044	LPRM	Q	Computer Analog Input	Non Class 1E	
NM1C51016	M1-C51-19	044	LPRM	Q	Computer Analog Input	Non Class 1E	
NM1C51017	M1-C51-19	044	LPRM	Q	Computer Analog Input	Non Class 1E	

R1

Q Loads in Contact with NR-C51-1R603B

CABLES	DWG	SH	FROM	SEPGR(FRM)	TO	SEPGR(TO)	ISOLATED
NM1C51018	M1-C51-19	044	LPRM	Q	Computer Analog Input	Non Class 1E	
NM1C51020	M1-C51-19	044	LPRM	Q	Computer Analog Input	Non Class 1E	
NM1C51021	M1-C51-19	044	LPRM	Q	Computer Analog Input	Non Class 1E	
NM1C51023	M1-C51-19	044	LPRM	Q	Computer Analog Input	Non Class 1E	
NM1C51024	M1-C51-19	044	LPRM	Q	Computer Analog Input	Non Class 1E	
NM1C51026	M1-C51-19	044	LPRM	Q	Computer Analog Input	Non Class 1E	
NM1C51027	M1-C51-19	044	LPRM	Q	Computer Analog Input	Non Class 1E	
NM1C51029	M1-C51-19	044	LPRM	Q	Computer Analog Input	Non Class 1E	
NM1C51030	M1-C51-19	044	LPRM	Q	Computer Analog Input	Non Class 1E	
NM1C51032	M1-C51-19	044	LPRM	Q	Computer Analog Input	Non Class 1E	
NM1C51033	M1-C51-19	044	APRM Card	Q	Computer Analog Input	Non Class 1E	
NM1C94117	M1-C51-19	033	Driver Card	Q	Computer Analog Input	Non Class 1E	
NM1C94118	M1-C51-19	033	Driver Card	Q	Computer Analog Input	Non Class 1E	
NM1I4801C	J-448	002	R.G. 1.97 Cat 2 (FT-14806 See App I for Eval.)	Q	R.G. 1.97 Cat 2 (LI/FI 14806)	Q	
NM1I4801F	J-448	001	XY-14806 (Isolation Device)	Q	Computer Input NXF01	Non Class 1E	YES
NM1P14101	M1-B21-128	003	PDT-B31-1N015A (Press Boundary)	Q	PDI-B31-1R612A	Non Class 1E	
NM1P14101	M1-B21-128	003	PDT-B31-1N015B (Press Boundary)	Q	PDI-B31-1R612B	Non Class 1E	
NM1P1F101	M1-B21-128	003	LITS-B21-1N026D (Mech Sw See App C for Eval.)	Q	LI-B21-1R604	Non Class 1E	
NM1P91601	M1-C12-110	016	APRM Trip Unit Contacts	Q	Isolator Card Z1	Non Class 1E	Contact to Coil

R1

Q Loads in Contact with NR-C51-1R603B

CABLES	DWG	SH	FROM	SEPGR(FRM)	TO	SEPGR(TO)	ISOLATED
NM1P91603	M1-C12-110	015	APRM Trip Unit Contacts	Q	Isolator Card Z1	Non Class 1E	Contact to Coil
NM1PB4102	J-406	011	PDT-C32-1N004B (Press Boundary)	Q	LI-C32-1R606B	Non Class 1E	
NM1PB4102	J-406	012	PDT-C32-1N004A (Press Boundary)	Q	LI-C32-1R606A	Non Class 1E	
NM1PB4102	J-406	024	PT-C32-1N005 (Press Boundary)	Q	PI-C32-1R605	Non Class 1E	
NM1PB4103	J-406	013	PDT-C32-1N017 (Press Boundary)	Q	LR-C32-1R608	Non Class 1E	
NM1PB4105	M1-C32-17	003	PT-C32-1N008 (Press Boundary)	Q	FR-C32-1R609	Non Class 1E	
NM1PC1301	J-448	003	R.G. 1.97 Cat 2 (LI/FI-14806 See App I for Eval.)	Q	LT-C41-1N001	Non Class 1E	
NM1PD4206	M1-C51-20	006	IRM Range Sw E	Q	C51-1K601E (IRM Mon)	Q	
NM1PD4213	M1-C51-20	006	IRM Range Sw C	Q	C51-1K601C (IRM Mon)	Q	R1
NM1PD4217	M1-C51-20	006	IRM Range Sw A	Q	C51-1K601A (IRM Mon)	Q	
NM1PD4X01	M1-C51-20	007	C51-1K601B (IRM Mon See App H for Eval.)	Q	NR-C51-1R603B	Non Class 1E	
NM1PD4X01	M1-C51-20	007	C51-1K601F (IRM Mon See App H for Eval.)	Q	NR-C51-1R603D	Non Class 1E	
NM1PD4X02	M1-C51-20	007	C51-1K601D (IRM Mon See App H for Eval.)	Q	NR-C51-1R603B	Non Class 1E	
NM1PD4X02	M1-C51-20	007	C51-1K601H (IRM Mon See App H for Eval.)	Q	NR-C51-1R603D	Non Class 1E	
NM1PDF206	M1-C51-20	007	IRM Range Switch B	Q	IRM-C51-1K601B	Q	
NM1PDF207	M1-C51-20	007	IRM Range Switch F	Q	IRM-C51-1K601F	Q	
NM1PDF212	M1-C51-20	007	IRM Range Switch D	Q	IRM-C51-1K601D	Q	
NM1PDF213	M1-C51-20	007	IRM Range Switch H	Q	IRM-C51-1K601H	Q	
NM1PE4101	M1-C51-19	022	Aux Trip Unit AR12 (See App H for Eval.)	Q	NR-C51-1R603D	Non Class 1E	

.Q Loads in Contact with NR-C51-1R603B

CABLES	DWG	SH	FROM	SEPGR(FRM)	TO	SEPGR(T0)	ISOLATED
NM1PE4103	M1-C51-19	018	Aux Trip Unit AR12 (See App H for Eval.)	Q	NR-C51-1R603B	Non Class 1E	
NM1PE4109	M1-C51-19	012	Aux Trip Unit AR31 (See App H for Eval.)	Q	NR-C51-1R603A	Non Class 1E	
NM1PE4109	M1-C51-19	014	Aux Trip Unit AR32 (See App H for Eval.)	Q	NR-C51-1R603B	Non Class 1E	
NM1PE4110	M1-C51-19	016	Aux Trip Unit AR41 (See App H for Eval.)	Q	NR-C51-1R603A	Non Class 1E	
NM1PE4111	M1-C51-19	020	Aux Trip Unit AR51 (See App H for Eval.)	Q	NR-C51-1R603C	Non Class 1E	
NM1PE4111	M1-C51-19	033	Driver Card Z33 (See App H for Eval.)	Q	NR-C51-1R603C	Non Class 1E	
NM1PE4112	M1-C51-19	033	Driver Card (See App H for Eval.)	Q	NR-C51-1R603C	Non Class 1E	
NM1PE4215	M1-C51-19	015	LPRM Card Dry Contact	Q	Indicating Light	Non Class 1E	Contact to Coil
NM1PE4216	M1-C51-19	010	LPRM CARD Z11	Q	Indicating Lights	Non Class 1E	Contact to Coil
NM1PE4218	M1-C51-19	027	LPRM Card Dry Contact	Q	Indicating Light	Non Class 1E	Contact to Coil
NM1PE4219	M1-C51-19	027	LPRM Card Dry Contact	Q	Indicating Light	Non Class 1E	Contact to Coil
NM1PE4223	M1-C51-19	011	LPRM Card Dry Contact	Q	Indicating Light	Non Class 1E	Contact to Coil
NM1PE4224	M1-C51-19	011	LPRM Card Dry Contact	Q	Indicating Light	Non Class 1E	Contact to Coil
NM1PE4238	M1-C51-19	017	LPRM Card Dry Contact	Q	Indicating Light	Non Class 1E	Contact to Coil
NM1PE4239	M1-C51-19	017	LPRM Card Dry Contact	Q	Indicating Light	Non Class 1E	Contact to Coil
NM1PE4245	M1-C51-19	019	LPRM Card Dry Contact	Q	Indicating Light	Non Class 1E	Contact to Coil
NM1PE4267	M1-C51-19	013	APRM Card	Q	Indicating Lights	Non Class 1E	Contact to Coil
NM1PE4268	M1-C51-19	013	APRM Card	Q	Indicating Light	Non Class 1E	Contact to Coil
NM1PE4279	M1-C51-19	040	Flow Unit C	Q	Indicating Light	Non Class 1E	Contact to Coil

R1

Q Loads in Contact with NR-C51-1R603B

CABLES	DWG	SH	FROM	SEPGR(FRM)	TO	SEPGR(TO)	ISOLATED
NM1PE4280	M1-C51-19	025	Relay Contacts	Q	Indicating Lights	Non Class 1E	Contact to Coil
NM1PE4283	M1-C51-19	025	Relay Contacts	Q	Indicating Lights	Non Class 1E	Contact to Coil
NM1PK0602	J-475	001	RISHH-D12-1K609A (See App G for Eval.)	Q	RR-D12-1R605	Non Class 1E	
NM1PK0602	J-475	002	RISHH-D12-1K615A (See App G for Eval.)	Q	RR-D12-1R607	Non Class 1E	
NM1PK0602	J-475	003	RISHH-D12-1K616A (See App G for Eval.)	Q	RR-D12-1R608	Non Class 1E	
NM1PK0602	J-478	001	RISHH-D12-0K617A (See App G for Eval.)	Q	RR-D12-0R609	Non Class 1E	
NM1PK0602	J-478	002	RISHH-D12-0K618A (See App G for Eval.)	Q	RR-D12-0R610	Non Class 1E	
NM1PK0603	J-439	009	RY-13962C (Isoaltion Device)	Q	RR-D12-1R603	Non Class 1E	YES
NM1PK3301	J-439	008	RY-13962B (Isoaltion Device)	Q	RR-D12-1R603	Non Class 1E	YES
NM1PK3301	J-439	010	RY-13962D (Isoaltion Device)	Q	RR-D12-1R603	Non Class 1E	YES
NM1PK3302	J-475	001	RISHH-D12-1K609A (See App G for Eval.)	Q	RR-D12-1R605	Non Class 1E	
NM1PK3302	J-475	005	RISHH-D12-0K618A (See App G for Eval.)	Q	RR-D12-0R610	Non Class 1E	
NM1PK3302	J-475	005	RISHH-D12-1K615B (See App G for Eval.)	Q	RR-D12-1R607	Non Class 1E	
NM1PK3302	J-475	006	RISHH-D12-1K616B (See App G for Eval.)	Q	RR-D12-1R608	Non Class 1E	
NM1PK3302	J-478	001	RISHH-D12-0K617A (See App G for Eval.)	Q	RR-D12-0R609	Non Class 1E	
NM1PQ4101	M1-C51-20	006	C51-1K601A (IRM Mon See App H for Eval.)	Q	NR-C51-1R603A	Non Class 1E	
NM1PQ4101	M1-C51-20	006	C51-1K601E (IRM Mon See App H for Eval.)	Q	NR-C51-1R603C	Non Class 1E	
NM1PQ4102	M1-C51-20	006	C51-1K601C (IRM Mon See App H for Eval.)	Q	NR-C51-1R603A	Non Class 1E	
NM1PQ4102	M1-C51-20	006	C51-1K601G (IRM Mon See App H for Eval.)	Q	NR-C51-1R603C	Non Class 1E	

R1

Q Loads in Contact with NR-C51-1R603B

CABLES	DWG	SH	FROM	SEPGR(FRM)	TO	SEPGR(TO)	ISOLATED
NM1PR4101	M1-G33-153	004	FT-G33-1N037 (Press Boundary)	Q	FI-G33-1R610	Non Class 1E	
NM1PR7N01	M1-G33-153	004	FY-14476 (Isolation Device)	Q	Computer Analog Input	Non Class 1E	YES
NM1Q0045L	J-457	015	NIT-15725A (Isolation Device)	Q	Computer Input NM602	Non Class 1E	YES
NM1Q0045L	J-457	015	NIT-15725A (Isolation Device)	Q	Computer Input NM118	Non Class 1E	YES
NM1Q0045M	J-457	015	NIT-15725A (Isolation Device)	Q	SPDS Input NM6002Z	Non Class 1E	YES
NM1Q0048L	J-457	016	NIT-15725B (Isolation Device)	Q	Computer Input	Non Class 1E	YES
NM1Q0048L	J-457	016	NIT-15725B (Isolation Device)	Q	Computer Input NM117	Non Class 1E	YES
NM1Q0048L	J-457	016	NIT-15725B (Isolation Device)	Q	Computer Input NM601	Non Class 1E	YES
NM1Q0048M	J-457	016	NIT-15725B (Isolation Device)	Q	Computer Input	Non Class 1E	YES
NM1Q0048M	J-457	016	NIT-15725B (Isolation Device)	Q	SPDS Input NM6001Z	Non Class 1E	YES
NM1Q1217R	M1-C51-19	012	XY-14201A (Isolation Device)	Q	PME2 (Power Supply)	Non Class 1E	YES
NM1Q1217S	M1-C51-19	014	XY-14201B (Isolation Device)	Q	PME2 (Power Supply)	Non Class 1E	YES
NM1Q1217T	M1-C51-19	016	XY-14201C(Isolation Device)	Q	PME2 (Power Supply)	Non Class 1E	YES
NM1Q1217U	M1-C51-19	020	XY-14201E (Isolation Device)	Q	PME2 (Power Supply)	Non Class 1E	YES
NM2E02009	E-023	004	Ch A (AT-20201 (Transducer))	Q	Computer Input ETI46	Non Class 1E	
NM2E02010	E-023	003	Ch A (AT-20104 (Transducer))	Q	Computer Input ETI51	Non Class 1E	
NM2E02010	E-023	003	Ch A (VT-20104 (Transducer)	Q	Computer Input Ebe91	Non Class 1E	
NM2E02010	E-023	003	Ch A (AT-20101 (Transducer))	Q	Computer Input ETI45	Non Class 1E	
NM2E02011	E-023	003	Ch C (AT-20301 (Transducer))	Q	Computer Input ETI47	Non Class 1E	

R1

Q Loads in Contact with NR-C51-1R603B

CABLES	DWG	SH	FROM	SEPGR(FRM)	TO	SEPGR(TO)	ISOLATED
NM2E02011	E-023	004	Ch B (VT-20204 (Transducer))	Q	Computer Input EBE92	Non Class 1E	
NM2E02012	E-023	003	Ch B (AT-20204 (Transducer))	Q	Computer Input EGI52	Non Class 1E	
NM2E02012	E-023	003	Ch C (AT-20308 (Transducer))	Q	Computer Input ETI97	Non Class 1E	
NM2E02012	E-023	003	Ch D (AT-20401 (Transducer))	Q	Computer Input ETI48	Non Class 1E	
NM2E02012	E-023	003	Ch D (VT-20404 (Transducer))	Q	Computer Input EBE94	Non Class 1E	
NM2M0110C	J-411	003	XY-01109B1 (Isolation Device)	Q	Computer Input	Non Class 1E	YES
RK1Q0628J	E-304	002	Division II Affiliated	Q	HV-16116A2		YES
RK1Q0628K	E-304	002	Division IIAffiliated	Q	HV-16108A2		YES
RK1Q0840G	E-064	032	Div II Affiliated (1Y689)	Q	1C699B	Non Class 1E	YES

R1

Q Loads in Contact with NR-C51-1R603C

CABLES	DWG	SH	FROM	SEPGR(FRM)	TO	SEPGR(TO)	ISOLATED
FK1P33104	M1-B21-129	008	Div II (Dry Contact)	Q	Indicating Lights	Q	
NK1C51011	M1-C51-20	012	Aux Unit Z2C	Q	IRM Det Position	Non Class 1E	Contact to Coil
NK1PD4205	M1-C51-19	018	IRM AUX UNIT (See App H for Eval.)	Q	NR-C51-1R603B	Non Class 1E	
NK1PE4244	M1-C51-19	039	Relays	Q	Dry Contact	NA	Contact to Coil
NK1PE4289	M1-C51-19	039	Relays	Q	Dry Contact	NA	Contact to Coil
NK1Q0029A	E-304	036	SVX1-157104 (Isolation Relay)	Q	SPDS-NCZ120Z	Non Class 1E	YES
NK1Q0029A	E-304	036	SVX2-157104 (Isolation Relay)	Q	SPDS-NCZ620Z	Non Class 1E	YES
NK1Q0029A	E-304	036	SVX2-157100B (Isolation Relay)	Q	SPDS-NCZ616Z	Non Class 1E	YES
NK1Q0029A	E-304	036	SVX1-157104 (Isolation Relay)	Q	SPDS-NCZ122Z	Non Class 1E	YES
NK1Q0029A	E-304	036	SVX1-157102A (Isolation Relay)	Q	SPDS-NCZ614Z	Non Class 1E	YES
NK1Q0029A	E-304	036	SVX1-157100B (Isolation Relay)	Q	SPDS-NCZ116Z	Non Class 1E	YES
NK1Q0029A	E-304	036	SVX1-157100A (Isolation Relay)	Q	SPDS-NCZ612Z	Non Class 1E	YES
NK1Q0029A	E-304	036	SVX1-157100A (Isolation Relay)	Q	SPDS-NCZ114Z	Non Class 1E	YES
NK1Q0029A	E-304	036	SVX1-1571002A (Isolation Relay)	Q	SPDS-NCZ118Z	Non Class 1E	YES
NK1Q0029A	E-304	036	SVX2-1571002B (Isolation Relay)	Q	SPDS-NCZ618Z	Non Class 1E	YES
NK1Q0029B	E-304	036	SVX2-157104 (Isolation Relay)	Q	SPDS-NCZ622Z	Non Class 1E	YES
NK1Q0053A	J-439	007	RY-13961C (Isolation Device)	Q	ES-G33-1K601	Non Class 1E	YES
NK1Q4243M	E-304	002A	Relay k 60 Dry Contact	Q	SPDS-NIZ002Z	Non Class 1E	Contact to Coil
NM1A0403G	E-023	001	Ch C (VT-20301 (Transducer))	Q	Computer Input ETE42	Non Class 1E	

R1

Q Loads in Contact with NR-C51-1R603C

CABLES	DWG	SH	FROM	SEPGR(FRM)	TO	SEPGR(TO)	ISOLATED
NM1B21006	M1-B21-128	003	LITS-B21-1N026D (Mech Sw See App C for Eval.)	Q	LI-B21-1R604	Non Class 1E	
NM1B21006	M1-B21-128	003	LT-B21-1N027 (Press Boundary)	Q	LI-B21-1R605	Non Class 1E	
NM1B21007	M1-B21-94	002	FT-B21-1N034K (Press Boundary)	Q	PDI-B21-1R608K	Non Class 1E	
NM1B21007	M1-B21-94	002	FT-B21-1N034M (Press Boundary)	Q	PDI-B21-1R608M	Non Class 1E	
NM1B21007	M1-B21-94	002	FT-B21-1N034P (Press Boundary)	Q	PDI-B21-1R608P	Non Class 1E	
NM1B21007	M1-B21-94	002	FT-B21-1N034S (Press Boundary)	Q	PDI-B21-1R608S	Non Class 1E	
NM1B21008	M1-B21-94	001	FT-B21-1N033A (Press Boundary)	Q	FY-B21-1K605A	Non Class 1E	R1
NM1B21008	M1-B21-94	001	FT-B21-1N033C (Press Boundary)	Q	FY-B21-1K605C	Non Class 1E	
NM1B21008	M1-B21-94	001	FT-B21-1N034B (Press Boundary)	Q	PDI-B21-1R608B	Non Class 1E	
NM1B21008	M1-B21-94	002	FT-B21-1N034F (Press Boundary)	Q	PDI-B21-1R608F	Non Class 1E	
NM1B21008	M1-B21-94	002	FT-B21-1N034H (Press Boundary)	Q	PDI-B21-1R608H	Non Class 1E	
NM1B21008	M1-B21-94	002	FT-B21-1N034D (Press Boundary)	Q	PDI-B21-1R608D	Non Class 1E	
NM1B21009	M1-B21-94	001	FT-B21-1N033A (Press Boundary)	Q	FY-B21-1K605A	Non Class 1E	
NM1B21010	M1-B21-94	001	FT-B21-1N033B (Press Boundary)	Q	FY-B21-1K605B	Non Class 1E	
NM1B21010	M1-B21-94	001	FT-B21-1N033D (Press Boundary)	Q	FY-B21-1K605D	Non Class 1E	
NM1B21010	M1-B21-94	002	FT-B21-1N034G (Press Boundary)	Q	PDI-B21-1R608G	Non Class 1E	
NM1B21010	M1-B21-94	002	FT-B21-1N034A (Press Boundary)	Q	PDI-B21-1R608A	Non Class 1E	
NM1B21010	M1-B21-94	002	FT-B21-1N034C (Press Boundary)	Q	PDI-B21-1R608C	Non Class 1E	
NM1B21010	M1-B21-94	002	FT-B21-1N034E (Press Boundary)	Q	PDI-B21-1R608E	Non Class 1E	

Q Loads in Contact with NR-C51-1R603C

CABLES	DWG	SH	FROM	SEPGR(FRM)	TO	SEPGR(TO)	ISOLATED
NM1B21011	M1-B21-94	001	PDT-B21-1N032 (Press Boundary)	Q	XR-B21-1R613	Non Class 1E	
NM1C32001	M1-C32-17	006	PDT-C32-1N004A (Press Boundary)	Q	Computer Analog Input	Non Class 1E	
NM1C32001	M1-C32-17	006	PT-C32-1N005 (Press Boundary)	Q	Computer Analog Input	Non Class 1E	
NM1C51009	M1-C51-19	044	LPRM	Q	Computer Analog Input	Non Class 1E	
NM1C51010	M1-C51-19	044	LPRM	Q	Computer Analog Input	Non Class 1E	
NM1C51011	M1-C51-19	044	LPRM	Q	Computer Analog Input	Non Class 1E	
NM1C51013	M1-C51-19	044	LPRM	Q	Computer Analog Input	Non Class 1E	
NM1C51016	M1-C51-19	044	LPRM	Q	Computer Analog Input	Non Class 1E	
NM1C51017	M1-C51-19	044	LPRM	Q	Computer Analog Input	Non Class 1E	RJ
NM1C51018	M1-C51-19	044	LPRM	Q	Computer Analog Input	Non Class 1E	
NM1C51020	M1-C51-19	044	LPRM	Q	Computer Analog Input	Non Class 1E	
NM1C51021	M1-C51-19	044	LPRM	Q	Computer Analog Input	Non Class 1E	
NM1C51023	M1-C51-19	044	LPRM	Q	Computer Analog Input	Non Class 1E	
NM1C51024	M1-C51-19	044	LPRM	Q	Computer Analog Input	Non Class 1E	
NM1C51026	M1-C51-19	044	LPRM	Q	Computer Analog Input	Non Class 1E	
NM1C51027	M1-C51-19	044	LPRM	Q	Computer Analog Input	Non Class 1E	
NM1C51029	M1-C51-19	044	LPRM	Q	Computer Analog Input	Non Class 1E	
NM1C51030	M1-C51-19	044	LPRM	Q	Computer Analog Input	Non Class 1E	
NM1C51032	M1-C51-19	044	LPRM	Q	Computer Analog Input	Non Class 1E	

Q Loads in Contact with NR-C51-1R603C

CABLES	DWG	SH	FROM	SEPGR(FRM)	TO	SEPGR(TO)	ISOLATED
NM1C51045	M1-C51-20	012	Aux Unit Z2C	Q	IRM Det Position	Non Class 1E	Contact to Coil
NM1C94117	M1-C51-19	033	Driver Card	Q	Computer Analog Input	Non Class 1E	
NM1C94118	M1-C51-19	033	Driver Card	Q	Computer Analog Input	Non Class 1E	
NM1F0203E	E-304	017	PDT-B21-1N032 (Press Boundary)	Q	SPDS NJP051Z	Non Class 1E	
NM1F0203F	E-304	017	LITS-B21-IN026D (Mech Sw See App C for Eval.)	Q	SPDS NBL002Z	Non Class 1E	
NM1I4202L	J-442	002	LY-14202A (Isolation Device)	Q	Computer Input	Non Class 1E	YES
NM1I4801C	J-448	002	R.G. 1.97 Cat 2 (FT-14806 See App I for Eval.)	Q	R.G. 1.97 Cat 2 (LI/FI 14806)	Q	
NM1I4801D	J-448	001	R.G. 1.97 Cat 2 (FE-14806 See App I for Eval.)	Q	R.G. 1.97 Cat 2 (FT-14806)	Q	
NM1I4801E	J-448	001	R.G. 1.97 Cat 2 (FE-14806 See App I for Eval.)	Q	R.G. 1.97 Cat 2 (FT-14806)	Q	
NM1I4801F	J-448	001	XY-14806 (Isolation Device)	Q	Computer Input NXF01	Non Class 1E	YES
NM1P11901	M1-B21-128	003	LT-B21-1N027 (Pressure Boundary)	Q	LI-B21-1R605	Non Class 1E	
NM1P14101	M1-B21-128	003	PDT-B31-1N015A (Press Boundary)	Q	PDI-B31-1R612A	Non Class 1E	
NM1P14101	M1-B21-128	003	PDT-B31-1N015B (Press Boundary)	Q	PDI-B31-1R612B	Non Class 1E	
NM1P1F101	M1-B21-128	003	LITS-B21-1N026D (Mech Sw See App C for Eval.)	Q	LI-B21-1R604	Non Class 1E	
NM1P91601	M1-C12-110	016	APRM Trip Unit Contacts	Q	Isolator Card Z1	Non Class 1E	Contact to Coil
NM1P91603	M1-C12-110	015	APRM Trip Unit Contacts	Q	Isolator Card Z1	Non Class 1E	Contact to Coil
NM1PB4102	J-406	011	PDT-C32-1N004B (Press Boundary)	Q	LI-C32-1R606B	Non Class 1E	
NM1PB4102	J-406	012	PDT-C32-1N004A (Press Boundary)	Q	LI-C32-1R606A	Non Class 1E	
NM1PB4102	J-406	024	PT-C32-1N005 (Press Boundary)	Q	PI-C32-1R605	Non Class 1E	

R1

Q Loads in Contact with NR-C51-1R603C

CABLES	DWG	SH	FROM	SEPGR(FRM)	TO	SEPGR(TO)	ISOLATED
NM1PB4103	J-406	013	PDT-C32-1N017 (Press Boundary)	Q	LR-C32-1R608	Non Class 1E	
NM1PB4105	M1-C32-17	003	PT-C32-1N008 (Press Boundary)	Q	FR-C32-1R609	Non Class 1E	
NM1PC1301	J-448	003	R.G. 1.97 Cat 2 (LI/FI-14806 See App I for Eval.)	Q	LT-C41-1N001	Non Class 1E	
NM1PD4206	M1-C51-20	006	IRM Range Sw E	Q	C51-1K601E (IRM Mon)	Q	
NM1PD4213	M1-C51-20	006	IRM Range Sw C	Q	C51-1K601C (IRM Mon)	Q	
NM1PD4217	M1-C51-20	006	IRM Range Sw A	Q	C51-1K601A (IRM Mon)	Q	
NM1PD4X01	M1-C51-20	007	C51-1K601B (IRM Mon See App H for Eval.)	Q	NR-C51-1R603B	Non Class 1E	
NM1PD4X01	M1-C51-20	007	C51-1K601F (IRM Mon See App H for Eval.)	Q	NR-C51-1R603D	Non Class 1E	R1
NM1PD4X02	M1-C51-20	007	C51-1K601D (IRM Mon See App H for Eval.)	Q	NR-C51-1R603B	Non Class 1E	
NM1PD4X02	M1-C51-20	007	C51-1K601H (IRM Mon See App H for Eval.)	Q	NR-C51-1R603D	Non Class 1E	
NM1PDF206	M1-C51-20	007	IRM Range Switch B	Q	IRM-C51-1K601B	Q	
NM1PDF207	M1-C51-20	007	IRM Range Switch F	Q	IRM-C51-1K601F	Q	
NM1PDF212	M1-C51-20	007	IRM Range Switch D	Q	IRM-C51-1K601D	Q	
NM1PDF213	M1-C51-20	007	IRM Range Switch H	Q	IRM-C51-1K601H	Q	
NM1PE4101	M1-C51-19	022	Aux Trip Unit AR12 (See App H for Eval.)	Q	NR-C51-1R603D	Non Class 1E	
NM1PE4103	M1-C51-19	018	Aux Trip Unit AR12 (See App H for Eval.)	Q	NR-C51-1R603B	Non Class 1E	
NM1PE4109	M1-C51-19	012	Aux Trip Unit AR31 (See App H for Eval.)	Q	NR-C51-1R603A	Non Class 1E	
NM1PE4109	M1-C51-19	014	Aux Trip Unit AR32 (See App H for Eval.)	Q	NR-C51-1R603B	Non Class 1E	
NM1PE4110	M1-C51-19	016	Aux Trip Unit AR41 (See App H for Eval.)	Q	NR-C51-1R603A	Non Class 1E	

Q Loads in Contact with NR-C51-1R603C

CABLES	DWG	SH	FROM	SEPGR(FRM)	TO	SEPGR(TO)	ISOLATED
NM1PE4111	M1-C51-19	020	Aux Trip Unit AR51 (See App H for Eval.)	Q	NR-C51-1R603C	Non Class 1E	
NM1PE4111	M1-C51-19	033	Driver Card Z33 (See App H for Eval.)	Q	NR-C51-1R603C	Non Class 1E	
NM1PE4112	M1-C51-19	033	Driver Card (See App H for Eval.)	Q	NR-C51-1R603C	Non Class 1E	
NM1PE4215	M1-C51-19	015	LPRM Card Dry Contact	Q	Indicating Light	Non Class 1E	Contact to Coil
NM1PE4216	M1-C51-19	010	LPRM CARD Z11	Q	Indicating Lights	Non Class 1E	Contact to Coil
NM1PE4218	M1-C51-19	027	LPRM Card Dry Contact	Q	Indicating Light	Non Class 1E	Contact to Coil
NM1PE4219	M1-C51-19	027	LPRM Card Dry Contact	Q	Indicating Light	Non Class 1E	Contact to Coil
NM1PE4223	M1-C51-19	011	LPRM Card Dry Contact	Q	Indicating Light	Non Class 1E	Contact to Coil
NM1PE4224	M1-C51-19	011	LPRM Card Dry Contact	Q	Indicating Light	Non Class 1E	Contact to Coil R1
NM1PE4238	M1-C51-19	017	LPRM Card Dry Contact	Q	Indicating Light	Non Class 1E	Contact to Coil
NM1PE4239	M1-C51-19	017	LPRM Card Dry Contact	Q	Indicating Light	Non Class 1E	Contact to Coil
NM1PE4245	M1-C51-19	019	LPRM Card Dry Contact	Q	Indicating Light	Non Class 1E	Contact to Coil
NM1PE4267	M1-C51-19	013	APRM Card	Q	Indicating Lights	Non Class 1E	Contact to Coil
NM1PE4268	M1-C51-19	013	APRM Card	Q	Indicating Light	Non Class 1E	Contact to Coil
NM1PE4279	M1-C51-19	040	Flow Unit C	Q	Indicating Light	Non Class 1E	Contact to Coil
NM1PE4280	M1-C51-19	025	Relay Contacts	Q	Indicating Lights	Non Class 1E	Contact to Coil
NM1PE4283	M1-C51-19	025	Relay Contacts	Q	Indicating Lights	Non Class 1E	Contact to Coil
NM1PK0602	J-475	001	RISHH-D12-1K609A (See App G for Eval.)	Q	RR-D12-1R605	Non Class 1E	
NM1PK0602	J-475	002	RISHH-D12-1K615A (See App G for Eval.)	Q	RR-D12-1R607	Non Class 1E	

Q Loads in Contact with NR-C51-1R603C

CABLES	DWG	SH	FROM	SEPGR(FRM)	TO	SEPGR(TO)	ISOLATED
NM1PK0602	J-475	003	RISHH-D12-1K616A (See App G for Eval.)	Q	RR-D12-1R608	Non Class 1E	
NM1PK0602	J-478	001	RISHH-D12-0K617A (See App G for Eval.)	Q	RR-D12-0R609	Non Class 1E	
NM1PK0602	J-478	002	RISHH-D12-0K618A (See App G for Eval.)	Q	RR-D12-0R610	Non Class 1E	
NM1PK0603	J-439	009	RY-13962C (Isoaltion Device)	Q	RR-D12-1R603	Non Class 1E	YES
NM1PK3301	J-439	008	RY-13962B (Isoaltion Device)	Q	RR-D12-1R603	Non Class 1E	YES
NM1PK3301	J-439	010	RY-13962D (Isoaltion Device)	Q	RR-D12-1R603	Non Class 1E	YES
NM1PK3302	J-475	001	RISHH-D12-1K609A (See App G for Eval.)	Q	RR-D12-1R605	Non Class 1E	
NM1PK3302	J-475	005	RISHH-D12-1K615B (See App G for Eval.)	Q	RR-D12-1R607	Non Class 1E	
NM1PK3302	J-475	005	RISHH-D12-0K618A (See App G for Eval.)	Q	RR-D12-0R610	Non Class 1E	
NM1PK3302	J-475	006	RISHH-D12-1K616B (See App G for Eval.)	Q	RR-D12-1R608	Non Class 1E	
NM1PK3302	J-478	001	RISHH-D12-0K617A (See App G for Eval.)	Q	RR-D12-0R609	Non Class 1E	
NM1PQ4101	M1-C51-20	006	C51-1K601A (IRM Mon See App H for Eval.)	Q	NR-C51-1R603A	Non Class 1E	
NM1PQ4101	M1-C51-20	006	C51-1K601E (IRM Mon See App H for Eval.)	Q	NR-C51-1R603C	Non Class 1E	
NM1PQ4102	M1-C51-20	006	C51-1K601C (IRM Mon See App H for Eval.)	Q	NR-C51-1R603A	Non Class 1E	
NM1PQ4102	M1-C51-20	006	C51-1K601G (IRM Mon See App H for Eval.)	Q	NR-C51-1R603C	Non Class 1E	
NM1PR4101	M1-G33-153	004	FT-G33-1N037 (Press Boundary)	Q	FI-G33-1R610	Non Class 1E	
NM1PR7N01	M1-G33-153	004	FY-14476 (Isolation Device)	Q	Computer Analog Input	Non Class 1E	YES
NM1Q0045L	J-457	015	NIT-15725A (Isolation Device)	Q	Computer Input NM118	Non Class 1E	YES
NM1Q0045L	J-457	015	NIT-15725A (Isolation Device)	Q	Computer Input NM602	Non Class 1E	YES

R1

Q Loads in Contact with NR-C51-1R603C

CABLES	DWG	SH	FROM	SEPGR(FRM)	TO	SEPGR(TO)	ISOLATED
NM1Q0045M	J-457	015	NIT-15725A (Isolation Device)	Q	SPDS Input NM6002Z	Non Class 1E	YES
NM1Q0048L	J-457	016	NIT-15725B (Isolation Device)	Q	Computer Input	Non Class 1E	YES
NM1Q0048L	J-457	016	NIT-15725B (Isolation Device)	Q	Computer Input NM117	Non Class 1E	YES
NM1Q0048L	J-457	016	NIT-15725B (Isolation Device)	Q	Computer Input NM601	Non Class 1E	YES
NM1Q0048M	J-457	016	NIT-15725B (Isolation Device)	Q	Computer Input	Non Class 1E	YES
NM1Q0048M	J-457	016	NIT-15725B (Isolation Device)	Q	SPDS Input NM6001Z	Non Class 1E	YES
NM1Q1217L	E-304	017	XY-14201F (Isolation Device)	Q	SPDS NM5006Z	Non Class 1E	YES
NM1Q1217M	E-304	017	XY-14201B (Isolation Device)	Q	SPDS NM5002Z	Non Class 1E	YES
NM1Q1217M	E-304	017	XY-14201A (Isolation Device)	Q	SPDS NM5001Z	Non Class 1E	YES
NM1Q1217N	E-304	017	XY-14201D (Isolation Device)	Q	SPDS NM5004Z	Non Class 1E	YES
NM1Q1217P	E-304	017	XY-14201C (Isolation Device)	Q	SPDS NM5003Z	Non Class 1E	YES
NM1Q1217Q	E-304	017	XY-14201E (Isolation Device)	Q	SPDS NM5005Z	Non Class 1E	YES
NM1Q1217R	M1-C51-19	012	XY-14201A (Isolation Device)	Q	PME2 (Power Supply)	Non Class 1E	YES
NM1Q1217S	M1-C51-19	014	XY-14201B (Isolation Device)	Q	PME2 (Power Supply)	Non Class 1E	YES
NM1Q1217T	M1-C51-19	016	XY-14201C(Isolation Device)	Q	PME2 (Power Supply)	Non Class 1E	YES
NM2M0109C	J-411	001	XY-01109A1 (Isolation Device)	Q	Computer Analog Input	Non Class 1E	YES
NM2M0110C	J-411	003	XY-01109B1 (Isolation Device)	Q	Computer Input	Non Class 1E	YES

R1

Q Loads in Contact with NR-C51-1R603D

CABLES	DWG	SH	FROM	SEPGR(FRM)	TO	SEPGR(TO)	ISOLATED
FK1B21004	M1-B21-129	003	Div II (LIS-B21-1N031D)	Q	Div II (K113D)	Q	
FK1B21004	M1-B21-129	003	Div II (PS-E11-1N010D)	Q	Div II (K3B)	Q	
FK1B21004	M1-B21-129	003	Div II (LIS-B21-1N031B)	Q	Div II (K113B)	Q	
FK1B21004	M1-B21-129	005	Div II (SV-14113M2)	Q	Div II (K19B)	Q	
FK1B21004	M1-B21-129	005	Div II (SV-14113N2)	Q	Div II (K20B)	Q	
FK1B21005	M1-B21-129	003	Div II (LIS-B21-1N042B)	Q	Div II (K12B)	Q	
FK1B21005	M1-B21-129	003	Div II (PS-E11-1N016D)	Q	Div II (K10B)	Q	
FK1B21005	M1-B21-129	003	Div II (PS-E11-1N020B)	Q	Div II (K10B)	Q	
FK1B21005	M1-B21-129	003	Div II (PS-E21-1N008B)	Q	Div II (K10B)	Q	
FK1B21005	M1-B21-129	003	Div II (SV-14113G2)	Q	Div II (K15B)	Q	R1
FK1B21005	M1-B21-129	003	Div II (SV-14113J2)	Q	Div II (K4B)	Q	
FK1B21005	M1-B21-129	003	Div II (SV-14113K2)	Q	Div II (K17B)	Q	
FK1B21005	M1-B21-129	003	Div II (SV-14113L2)	Q	Div II (K18B)	Q	
FK1B21006	M1-B21-129	003	Div II (PS-E11-1N009B)	Q	Div II (K9B)	Q	
FK1B21006	M1-B21-129	003	Div II (PS-E11-1N010B)	Q	Div II (K2B)	Q	
FK1B21006	M1-B21-129	003	Div II (PS-E11-1N016B)	Q	Div II (K9B)	Q	
FK1B21007	M1-B21-129	003	Div II (PS-E11-1N020D)	Q	Div II (K9B)	Q	
FK1P33101	M1-B21-129	003	Div II (PS-E11-1N010B)	Q	Div II (K2B)	Q	
FK1P33102	M1-B21-129	005	Div II (1D624-11)	Q	Indicating Light	Q	

Q Loads in Contact with NR-C51-1R603D

CABLES	DWG	SH	FROM	SEPGR(FRM)	TO	SEPGR(TO)	ISOLATED
FK1P33104	M1-B21-129	008	Div II (Dry Contact)	Q	Indicating Lights	Q	
FK1Q0628G	E-304	002	Div II (HV-15768)	Q	Div II (Iso Mux XIT-15701B)	Q	
FK1Q0838E	E-304	007	Div II (HV-E21-1F015B)	Q	Div II (Iso Mux XIT-15701B)	Q	
FK1Q1333D	E-304	006	Div II (HV-E51-1F007)	Q	Div II (Iso Mux XIT-15701B)	Q	
FK1Q1333D	E-304	006	Div II (HV-E51-1F034)	Q	Div II (Iso Mux XIT-15701B)	Q	
FK1Q1333E	E-304	001	Div II (HV-E51-1F088)	Q	Div II (Iso Mux XIT-15701B)	Q	
FK1Q1551D	E-304	011	Div II (HV-B21-1F019)	Q	Div II (Iso Mux XIT-15701B)	Q	
FK1Q1551D	E-304	011	Div II (HV-B21-1F028D)	Q	Div II (Iso Mux XIT-15701B)	Q	
FK1Q1551E	E-304	011	Div II (SV-E11-1F080B)	Q	Div II (Iso Mux XIT-15701B)	Q	R1
FK1Q1551E	E-304	011	Div II SV-E11-1F080A)	Q	Div II (Iso Mux XIT-15701B)	Q	
FK1Q1551F	E-304	011	Div II (HV-B21-1F028A)	Q	Div II (Iso Mux XIT-15701B)	Q	
FK1Q1551F	E-304	011	Div II (HV-B21-1F028B)	Q	Div II (Iso Mux XIT-15701B)	Q	
FK1Q1551F	E-304	011	Div II (HV-B21-1F028C)	Q	Div II (Iso Mux XIT-15701B)	Q	
FK1Q1551F	E-304	011	Div II (HV-B21-1F028D)	Q	Div II (Iso Mux XIT-15701B)	Q	
FK1Q1551G	E-304	011	Div II (TIP BALL VALVE)	Q	Div II (Iso Mux XIT-15701B)	Q	
FK1Q4035D	E-304	008	Div II (HV-E41-1F003)	Q	Div II (Iso Mux XIT-15701B)	Q	
FK1Q4035D	E-304	008	Div II (HV-E41-1F075)	Q	Div II (Iso Mux XIT-15701B)	Q	
FK1Q4035F	E-304	008	Div II (HV-E41-1F042)	Q	Div II (Iso Mux XIT-15701B)	Q	
FK1Q4038A	E-304	008	Div II (HV-E11-1F024B)	Q	Div II (Iso Mux XIT-15701B)	Q	

Q Loads in Contact with NR-C51-1R603D

CABLES	DWG	SH	FROM	SEPGR(FRM)	TO	SEPGR(TO)	ISOLATED
FK1Q4038A	E-304	008	Div II (HV-E11-1F027B)	Q	Div II (Iso Mux XIT-15701B)	Q	
FK1Q4038A	E-304	008	Div II (HV-E11-1F016B)	Q	Div II (Iso Mux XIT-15701B)	Q	
FK1Q4038B	E-304	005	Div II (HV-E11-1F021B)	Q	Div II (Iso Mux XIT-15701B)	Q	
FK1Q4038D	E-304	007	Div II (HV-E11-1F008)	Q	Div II (Iso Mux XIT-15701B)	Q	
FK1Q4038E	E-304	007	Div II (HV-E11-1F008)	Q	Div II (Iso Mux XIT-15701B)	Q	
FK1Q4038F	E-304	012	Div II (HV-11346)	Q	Div II (Iso Mux XIT-15701B)	Q	
FK1Q4038G	E-304	014	Div II (SV-12605)	Q	Div II (Iso Mux XIT-15701B)	Q	
FK1Q4038G	E-304	014	Div II (SV-12644)	Q	Div II (Iso Mux XIT-15701B)	Q	
FK1Q4038G	E-304	014	Div II (SV-12649)	Q	Div II (Iso Mux XIT-15701B)	Q	
FK1Q4038H	E-304	014	Div II (SV-12605)	Q	Div II (Iso Mux XIT-15701B)	Q	
FK1Q4038J	E-304	014	Div II (HV-E11-1F015B)	Q	Div II (Iso Mux XIT-15701B)	Q	
FK1Q4038L	E-304	014	Div II (HV-15711)	Q	Div II (Iso Mux XIT-15701B)	Q	
FK1Q4038R	E-304	012	Div II (HV-11345)	Q	Div II (Iso Mux XIT-15701B)	Q	
FK1Q4190F	E-304	015	Div II (HV-15714)	Q	Div II (Iso Mux XIT-15701B)	Q	
FK1Q4190F	E-304	015	Div II (SV-15738)	Q	Div II (Iso Mux XIT-15701B)	Q	
FK1Q4190G	E-304	015	Div II (HV-15704)	Q	Div II (Iso Mux XIT-15701B)	Q	
FK1Q4190G	E-304	015	Div II (HV-15724)	Q	Div II (Iso Mux XIT-15701B)	Q	
FK1Q4190H	E-304	010	Div II (SV-15740B)	Q	Div II (Iso Mux XIT-15701B)	Q	
FK1Q4190H	E-304	010	Div II (SV-15742B)	Q	Div II (Iso Mux XIT-15701B)	Q	

R)

Q Loads in Contact with NR-C51-1R603D

CABLES	DWG	SH	FROM	SEPGR(FRM)	TO	SEPGR(TO)	ISOLATED
FK1Q4190J	E-304	015	Div II (HV-15721)	Q	Div II (Iso Mux XIT-15701B)	Q	
FK1Q4190J	E-304	015	Div II (HV-15723)	Q	Div II (Iso Mux XIT-15701B)	Q	
FK1Q4190J	E-304	015	Div II (HV-15724)	Q	Div II (Iso Mux XIT-15701B)	Q	
FK1Q4190K	E-304	015	Div II (SV-15789)	Q	Div II (Iso Mux XIT-15701B)	Q	
FK1Q4190K	E-304	015	Div II (HV-15705)	Q	Div II (Iso Mux XIT-15701B)	Q	
FK1Q4190K	E-304	015	Div II (SV-15738)	Q	Div II (Iso Mux XIT-15701B)	Q	
FK1V2619D	E-304	005	Div II (HV-18792B2)	Q	Div II (Iso Mux XIT-15701B)	Q	
FK1V2619D	E-304	005	Div II (HV-18792B1)	Q	Div II (Iso Mux XIT-15701B)	Q	
FK1V2619D	E-304	005	Div II (HV-18782B1)	Q	Div II (Iso Mux XIT-15701B)	Q	
FK1V2619D	E-304	005	Div II (HV-18782B2)	Q	Div II (Iso Mux XIT-15701B)	Q	
FK1V2619E	E-304	002	Div II (HV-18781B1)	Q	Div II (Iso Mux XIT-15701B)	Q	
FK1V2619E	E-304	002	Div II (HV-18781B2)	Q	Div II (Iso Mux XIT-15701B)	Q	
FK1V2619F	E-304	002	Div II (HV-18791B1)	Q	Div II (Iso Mux XIT-15701B)	Q	
FK1V2619F	E-304	002	Div II (HV-18791B2)	Q	Div II (Iso Mux XIT-15701B)	Q	
FM1I4203K	J-442	003	Div II (PT-14203B)	Q	Div II (Iso Mux XIT-15701B)	Q	
FM1Q0835D	E-304	018	FT-E11-1N003B (Press Boundary))	Q	Div II (Iso Mux XIT-15701B)	Q	
FM1Q4190A	E-304	018	Div II (PT-15729B)	Q	Div II (Iso Mux XIT-15701B)	Q	
FM1Q4190K	E-304	016	Div II (TT-15790B)	Q	Div II (Iso Mux XIT-15701B)	Q	
FM1Q4190K	E-304	016	Div II (TT-15799B)	Q	Div II (Iso Mux XIT-15701B)	Q	

R1

Q Loads in Contact with NR-C51-1R603D

CABLES	DWG	SH	FROM	SEPGR(FRM)	TO	SEPGR(TO)	ISOLATED
FM1Q4190L	E-304	016	Div II (PT-15709B)	Q	Div II (Iso Mux XIT-15701B)	Q	
FM1Q4190L	E-304	016	Div II (PT-15710B)	Q	Div II (Iso Mux XIT-15701B)	Q	
FM1Q4190M	E-304	016	Div II (LT-15775B)	Q	Div II (Iso Mux XIT-15701B)	Q	
FM1Q4190M	E-304	016	Div II (LT-15776B)	Q	Div II (Iso Mux XIT-15701B)	Q	
FM1Q4236E	E-304	016	Div II (AR-15745B)	Q	Div II (Iso Mux XIT-15701B)	Q	
FM1Q4236E	E-304	016	Div II (AR-15746B)	Q	Div II (Iso Mux XIT-15701B)	Q	
FM1Q4236F	E-304	016	Div II (TX-15752)	Q	Div II (Iso Mux XIT-15701B)	Q	
FM1Q4238D	E-304	020	Div II (RY-15721B)	Q	Div II (Iso Mux XIT-15701B)	Q	R1
NK1PE4244	M1-C51-19	039	Relays	Q	Dry Contact	NA	Contact to Coil
NK1PE4289	M1-C51-19	039	Relays	Q	Dry Contact	NA	Contact to Coil
NM1A0403G	E-023	001	Ch C (VT-20301 (Transducer))	Q	Computer Input ETE42	Non Class 1E	
NM1C32001	M1-C32-17	006	PDT-C32-1N004A (Press Boundary)	Q	Computer Analog Input	Non Class 1E	
NM1C32001	M1-C32-17	006	PT-C32-1N005 (Press Boundary)	Q	Computer Analog Input	Non Class 1E	
NM1C51009	M1-C51-19	044	LPRM	Q	Computer Analog Input	Non Class 1E	
NM1C51010	M1-C51-19	044	LPRM	Q	Computer Analog Input	Non Class 1E	
NM1C51011	M1-C51-19	044	LPRM	Q	Computer Analog Input	Non Class 1E	
NM1C51013	M1-C51-19	044	LPRM	Q	Computer Analog Input	Non Class 1E	
NM1C51016	M1-C51-19	044	LPRM	Q	Computer Analog Input	Non Class 1E	
NM1C51017	M1-C51-19	044	LPRM	Q	Computer Analog Input	Non Class 1E	

Q Loads in Contact with NR-C51-1R603D

CABLES	DWG	SH	FROM	SEPGR(FRM)	TO	SEPGR(TO)	ISOLATED
NM1C51018	M1-C51-19	044	LPRM	Q	Computer Analog Input	Non Class 1E	
NM1C51020	M1-C51-19	044	LPRM	Q	Computer Analog Input	Non Class 1E	
NM1C51021	M1-C51-19	044	LPRM	Q	Computer Analog Input	Non Class 1E	
NM1C51023	M1-C51-19	044	LPRM	Q	Computer Analog Input	Non Class 1E	
NM1C51024	M1-C51-19	044	LPRM	Q	Computer Analog Input	Non Class 1E	
NM1C51026	M1-C51-19	044	LPRM	Q	Computer Analog Input	Non Class 1E	
NM1C51027	M1-C51-19	044	LPRM	Q	Computer Analog Input	Non Class 1E	
NM1C51029	M1-C51-19	044	LPRM	Q	Computer Analog Input	Non Class 1E	
NM1C51030	M1-C51-19	044	LPRM	Q	Computer Analog Input	Non Class 1E	
NM1C51032	M1-C51-19	044	LPRM	Q	Computer Analog Input	Non Class 1E	
NM1C94117	M1-C51-19	033	Driver Card	Q	Computer Analog Input	Non Class 1E	
NM1C94118	M1-C51-19	033	Driver Card	Q	Computer Analog Input	Non Class 1E	
NM1I4801C	J-448	002	R.G. 1.97 Cat 2 (FT-14806 See App I for Eval.)	Q	R.G. 1.97 Cat 2 (LI/FI 14806)	Q	
NM1I4801F	J-448	001	XY-14806 (Isolation Device)	Q	Computer Input NXF01	Non Class 1E	YES
NM1P14101	M1-B21-128	003	PDT-B31-1N015A (Press Boundary)	Q	PDI-B31-1R612A	Non Class 1E	
NM1P14101	M1-B21-128	003	PDT-B31-1N015B (Press Boundary)	Q	PDI-B31-1R612B	Non Class 1E	
NM1P1F101	M1-B21-128	003	LITS-B21-1N026D (Mech Sw See App C for Eval.)	Q	LI-B21-1R604	Non Class 1E	
NM1P91601	M1-C12-110	016	APRM Trip Unit Contacts	Q	Isolator Card Z1	Non Class 1E	Contact to Coil
NM1P91603	M1-C12-110	015	APRM Trip Unit Contacts	Q	Isolator Card Z1	Non Class 1E	Contact to Coil

R1

Q Loads in Contact with NR-C51-1R603D

CABLES	DWG	SH	FROM	SEPGR(FRM)	TO	SEPGR(TO)	ISOLATED
NM1PB4102	J-406	011	PDT-C32-1N004B (Press Boundary)	Q	LI-C32-1R606B	Non Class 1E	
NM1PB4102	J-406	012	PDT-C32-1N004A (Press Boundary)	Q	LI-C32-1R606A	Non Class 1E	
NM1PB4102	J-406	024	PT-C32-1N005 (Press Boundary)	Q	PI-C32-1R605	Non Class 1E	
NM1PB4103	J-406	013	PDT-C32-1N017 (Press Boundary)	Q	LR-C32-1R608	Non Class 1E	
NM1PB4105	M1-C32-17	003	PT-C32-1N008 (Press Boundary)	Q	FR-C32-1R609	Non Class 1E	
NM1PC1301	J-448	003	R.G. 1.97 Cat 2 (LI/FI-14806 See App I for Eval.)	Q	LT-C41-1N001	Non Class 1E	
NM1PD4206	M1-C51-20	006	IRM Range Sw E	Q	C51-1K601E (IRM Mon)	Q	
NM1PD4213	M1-C51-20	006	IRM Range Sw C	Q	C51-1K601C (IRM Mon)	Q	
NM1PD4217	M1-C51-20	006	IRM Range Sw A	Q	C51-1K601A (IRM Mon)	Q	R1
NM1PD4X01	M1-C51-20	007	C51-1K601B (IRM Mon See App H for Eval.)	Q	NR-C51-1R603B	Non Class 1E	
NM1PD4X01	M1-C51-20	007	C51-1K601F (IRM Mon See App H for Eval.)	Q	NR-C51-1R603D	Non Class 1E	
NM1PD4X02	M1-C51-20	007	C51-1K601D (IRM Mon See App H for Eval.)	Q	NR-C51-1R603B	Non Class 1E	
NM1PD4X02	M1-C51-20	007	C51-1K601H (IRM Mon See App H for Eval.)	Q	NR-C51-1R603D	Non Class 1E	
NM1PDF206	M1-C51-20	007	IRM Range Switch B	Q	IRM-C51-1K601B	Q	
NM1PDF207	M1-C51-20	007	IRM Range Switch F	Q	IRM-C51-1K601F	Q	
NM1PDF212	M1-C51-20	007	IRM Range Switch D	Q	IRM-C51-1K601D	Q	
NM1PDF213	M1-C51-20	007	IRM Range Switch H	Q	IRM-C51-1K601H	Q	
NM1PE4101	M1-C51-19	022	Aux Trip Unit AR12 (See App H for Eval.)	Q	NR-C51-1R603D	Non Class 1E	
NM1PE4103	M1-C51-19	018	Aux Trip Unit AR12 (See App H for Eval.)	Q	NR-C51-1R603B	Non Class 1E	

Q Loads in Contact with NR-C51-1R603D

CABLES	DWG	SH	FROM	SEPGR(FRM)	TO	SEPGR(TO)	ISOLATED
NM1PE4109	M1-C51-19	012	Aux Trip Unit AR31 (See App H for Eval.)	Q	NR-C51-1R603A	Non Class 1E	
NM1PE4109	M1-C51-19	014	Aux Trip Unit AR32 (See App H for Eval.)	Q	NR-C51-1R603B	Non Class 1E	
NM1PE4110	M1-C51-19	016	Aux Trip Unit AR41 (See App H for Eval.)	Q	NR-C51-1R603A	Non Class 1E	
NM1PE4111	M1-C51-19	020	Aux Trip Unit AR51 (See App H for Eval.)	Q	NR-C51-1R603C	Non Class 1E	
NM1PE4111	M1-C51-19	033	Driver Card Z33 (See App H for Eval.)	Q	NR-C51-1R603C	Non Class 1E	
NM1PE4112	M1-C51-19	033	Driver Card (See App H for Eval.)	Q	NR-C51-1R603C	Non Class 1E	
NM1PE4215	M1-C51-19	015	LPRM Card Dry Contact	Q	Indicating Light	Non Class 1E	Contact to Coil
NM1PE4216	M1-C51-19	010	LPRM CARD Z11	Q	Indicating Lights	Non Class 1E	Contact to Coil
NM1PE4218	M1-C51-19	027	LPRM Card Dry Contact	Q	Indicating Light	Non Class 1E	Contact to Coil
NM1PE4219	M1-C51-19	027	LPRM Card Dry Contact	Q	Indicating Light	Non Class 1E	Contact to Coil
NM1PE4223	M1-C51-19	011	LPRM Card Dry Contact	Q	Indicating Light	Non Class 1E	Contact to Coil
NM1PE4224	M1-C51-19	011	LPRM Card Dry Contact	Q	Indicating Light	Non Class 1E	Contact to Coil
NM1PE4238	M1-C51-19	017	LPRM Card Dry Contact	Q	Indicating Light	Non Class 1E	Contact to Coil
NM1PE4239	M1-C51-19	017	LPRM Card Dry Contact	Q	Indicating Light	Non Class 1E	Contact to Coil
NM1PE4245	M1-C51-19	019	LPRM Card Dry Contact	Q	Indicating Light	Non Class 1E	Contact to Coil
NM1PE4267	M1-C51-19	013	APRM Card	Q	Indicating Lights	Non Class 1E	Contact to Coil
NM1PE4268	M1-C51-19	013	APRM Card	Q	Indicating Light	Non Class 1E	Contact to Coil
NM1PE4279	M1-C51-19	040	Flow Unit C	Q	Indicating Light	Non Class 1E	Contact to Coil
NM1PE4280	M1-C51-19	025	Relay Contacts	Q	Indicating Lights	Non Class 1E	Contact to Coil

Q Loads in Contact with NR-C51-1R603D

CABLES	DWG	SH	FROM	SEPGR(FRM)	TO	SEPGR(TO)	ISOLATED
NM1PE4283	M1-C51-19	025	Relay Contacts	Q	Indicating Lights	Non Class 1E	Contact to Coil
NM1PK0602	J-475	001	RISHH-D12-1K609A (See App G for Eval.)	Q	RR-D12-1R605	Non Class 1E	
NM1PK0602	J-475	002	RISHH-D12-1K615A (See App G for Eval.)	Q	RR-D12-1R607	Non Class 1E	
NM1PK0602	J-475	003	RISHH-D12-1K616A (See App G for Eval.)	Q	RR-D12-1R608	Non Class 1E	
NM1PK0602	J-478	001	RISHH-D12-0K617A (See App G for Eval.)	Q	RR-D12-0R609	Non Class 1E	
NM1PK0602	J-478	002	RISHH-D12-0K618A (See App G for Eval.)	Q	RR-D12-0R610	Non Class 1E	
NM1PK0603	J-439	009	RY-13962C (Isoaltion Device)	Q	RR-D12-1R603	Non Class 1E	YES
NM1PK3301	J-439	008	RY-13962B (Isoaltion Device)	Q	RR-D12-1R603	Non Class 1E	YES
NM1PK3301	J-439	010	RY-13962D (Isoaltion Device)	Q	RR-D12-1R603	Non Class 1E	YES
NM1PK3302	J-475	001	RISHH-D12-1K609A (See App G for Eval.)	Q	RR-D12-1R605	Non Class 1E	
NM1PK3302	J-475	005	RISHH-D12-0K618A (See App G for Eval.)	Q	RR-D12-0R610	Non Class 1E	
NM1PK3302	J-475	005	RISHH-D12-1K615B (See App G for Eval.)	Q	RR-D12-1R607	Non Class 1E	
NM1PK3302	J-475	006	RISHH-D12-1K616B (See App G for Eval.)	Q	RR-D12-1R608	Non Class 1E	
NM1PK3302	J-478	001	RISHH-D12-0K617A (See App G for Eval.)	Q	RR-D12-0R609	Non Class 1E	
NM1PQ4101	M1-C51-20	006	C51-1K601A (IRM Mon See App H for Eval.)	Q	NR-C51-1R603A	Non Class 1E	
NM1PQ4101	M1-C51-20	006	C51-1K601E (IRM Mon See App H for Eval.)	Q	NR-C51-1R603C	Non Class 1E	
NM1PQ4102	M1-C51-20	006	C51-1K601C (IRM Mon See App H for Eval.)	Q	NR-C51-1R603A	Non Class 1E	
NM1PQ4102	M1-C51-20	006	C51-1K601G (IRM Mon See App H for Eval.)	Q	NR-C51-1R603C	Non Class 1E	
NM1PR4101	M1-G33-153	004	FT-G33-1N037 (Press Boundary)	Q	FI-G33-1R610	Non Class 1E	

R1

Q Loads in Contact with NR-C51-1R603D

CABLES	DWG	SH	FROM	SEPGR(FRM)	TO	SEPGR(TO)	ISOLATED
NM1PR7N01	M1-G33-153	004	FY-14476 (Isolation Device)	Q	Computer Analog Input	Non Class 1E	YES
NM1Q0045L	J-457	015	NIT-15725A (Isolation Device)	Q	Computer Input NM602	Non Class 1E	YES
NM1Q0045L	J-457	015	NIT-15725A (Isolation Device)	Q	Computer Input NM118	Non Class 1E	YES
NM1Q0045M	J-457	015	NIT-15725A (Isolation Device)	Q	SPDS Input NM6002Z	Non Class 1E	YES
NM1Q0048L	J-457	016	NIT-15725B (Isolation Device)	Q	Computer Input	Non Class 1E	YES
NM1Q0048L	J-457	016	NIT-15725B (Isolation Device)	Q	Computer Input NM117	Non Class 1E	YES
NM1Q0048L	J-457	016	NIT-15725B (Isolation Device)	Q	Computer Input NM601	Non Class 1E	YES
NM1Q0048M	J-457	016	NIT-15725B (Isolation Device)	Q	Computer Input	Non Class 1E	YES
NM1Q0048M	J-457	016	NIT-15725B (Isolation Device)	Q	SPDS Input NM6001Z	Non Class 1E	YES
NM1Q1217R	M1-C51-19	012	XY-14201A (Isolation Device)	Q	PME2 (Power Supply)	Non Class 1E	YES
NM1Q1217S	M1-C51-19	014	XY-14201B (Isolation Device)	Q	PME2 (Power Supply)	Non Class 1E	YES
NM1Q1217T	M1-C51-19	016	XY-14201C(Isolation Device)	Q	PME2 (Power Supply)	Non Class 1E	YES
NM1Q1217U	M1-C51-19	020	XY-14201E (Isolation Device)	Q	PME2 (Power Supply)	Non Class 1E	YES
NM2E02009	E-023	004	Ch A (AT-20201 (Transducer))	Q	Computer Input ETI46	Non Class 1E	
NM2E02010	E-023	003	Ch A (AT-20104 (Transducer))	Q	Computer Input ETI51	Non Class 1E	
NM2E02010	E-023	003	Ch A (VT-20104 (Transducer)	Q	Computer Input Ebe91	Non Class 1E	
NM2E02010	E-023	003	Ch A (AT-20101 (Transducer))	Q	Computer Input ETI45	Non Class 1E	
NM2E02011	E-023	003	Ch C (AT-20301 (Transducer))	Q	Computer Input ETI47	Non Class 1E	
NM2E02011	E-023	004	Ch B (VT-20204 (Transducer))	Q	Computer Input EBE92	Non Class 1E	

R-1

Q Loads in Contact with NR-C51-1R603D

CABLES	DWG	SH	FROM	SEPGR(FRM)	TO	SEPGR(TO)	ISOLATED
NM2E02012	E-023	003	Ch B (AT-20204 (Transducer))	Q	Computer Input EGI52	Non Class 1E	
NM2E02012	E-023	003	Ch C (AT-20308 (Transducer))	Q	Computer Input ETI97	Non Class 1E	
NM2E02012	E-023	003	Ch D (AT-20401 (Transducer))	Q	Computer Input ETI48	Non Class 1E	
NM2E02012	E-023	003	Ch D (VT-20404 (Transducer))	Q	Computer Input EBE94	Non Class 1E	R1
NM2M0110C	J-411	003	XY-01109B1 (Isolation Device)	Q	Computer Input	Non Class 1E	YES
RK1Q0628J	E-304	002	Division II Affiliated	Q	HV-16116A2		YES
RK1Q0628K	E-304	002	Division IIAffiliated	Q	HV-16108A2		YES
RK1Q0840G	E-064	032	Div II Affiliated (1Y689)	Q	1C699B	Non Class 1E	YES

CABLES	DWG	SH	FROM	SEPGR(FRM)	TO	SEPGR(TO)	ISOLATED
EK1E11013	M1-E11-66	004	Div I (1D614)	Q	Div I (PS-E11-1N021E,G)	Q	
EK1E11013	M1-E11-66	004	Div I (1D614)	Q	Div I (PS-E11-1N011A)	Q	
EK1E11013	M1-E11-66	005	Div I (1D614)	Q	Div I (52AX-20201)	Q	
EK1P8F201	M1-B31-275	014	Div I (1B219)	Q	Div I (K99A, K37A-E11A)	Q	
EK1P8F201	M1-B31-275	016	Div I (1B219)	Q	Div I (K99A, K37A-E11A)	Q	
NK1I4801B	J-448	002	R.G. 1.97 Cat 2 (FT-14806)	Q	1Y629-22	Non Class 1E	
NK1PD4205	M1-C51-19	018	IRM AUX UNIT (See App H for Eval.)	Q	NR-C51-1R603B	Non Class 1E	
NK1PDF205	M1-C51-20	012	IRM Range Switch B, F	Q	Trip Aux Unit Z2B	Non Class 1E	
NK1PDF211	M1-C51-20	012	IRM Range Switch D, H	Q	Trip Aux Unit Z2B	Non Class 1E	
NK1PDF215	M1-C51-20	005	IRM Range Switch B	Q	Trip Aux Unit Z2B	Non Class 1E	
NK1PDF217	M1-C51-20	005	IRM Range Switch B	Q	Trip Aux Unit Z2B	Non Class 1E	
NK1Q2001A	E-158	001	LSH-C12-1N013E (Press Boundary)	Q	K3 Relay	Non Class 1E	NA
NK1Q2001B	E-158	001	LSH-C12-1N013G (Press Boundary)	Q	K4 Relay	Non Class 1E	NA
NK1S1728B	E-283	001	SV-12365 (Press Boundary)	Q	1Y218-36	Non Class 1E	
NK1S1728C	E-283	001	SV-12366 (Press Boundary)	Q	1Y218-36	Non Class 1E	
NK1S1728D	E-283	001	SV-12368 (Press Boundary)	Q	1Y218-36	Non Class 1E	
NK1S1728E	E-283	001	SV-12369 (Press Boundary)	Q	1Y218-36	Non Class 1E	
NK1S1728F	E-283	001	SV-12361 (Press Boundary)	Q	1Y218-36	Non Class 1E	
NK1S1728G	E-283	001	SV-12374 (Press Boundary)	Q	1Y218-36	Non Class 1E	

R1

CABLES	DWG	SH	FROM	SEPGR(FRM)	TO	SEPGR(TO)	ISOLATED
NK1S1728H	E-283	001	SV-12360A (Press Boundary)	Q	1Y218-36	Non Class 1E	
NK1S1728K	E-283	001	SV-12364 (Press Boundary)	Q	1Y218-36	Non Class 1E	
NK1S1728N	E-283	001	SV-12360B (Press Boundary)	Q	1Y218-36	Non Class 1E	
NK1S1728O	E-283	001	SV-12362A (Press Boundary)	Q	1Y218-36	Non Class 1E	
NM0I1201C	J-412	002	Div I (1A20303-52a)	Q	PME1 24 V Pwr Supply	Non Class 1E	
NM0I1201F	J-412	002	Div I (1A20108-52a)	Q	PME1 24 V Pwr Supply	Non Class 1E	
NM0I1201G	J-412	002	Div I (2A20108-52a)	Q	PME1 24 V Pwr Supply	Non Class 1E	
NM0I1202F	J-412	002	Div II (1A20202-52a)	Q	PME2 24 V Pwr Supply	Non Class 1E	
NM0I1202G	J-412	002	Div II (2A20208-52a)	Q	PME2 24 V Pwr Supply	Non Class 1E	
NM0S0400C	E-146	001	Ch A (AT-20108 (Transducer))	Q	Computer Input AEI01	Non Class 1E	
NM0S0400D	E-146	001	Ch A (AT-20108 (Transducer))	Q	Computer Input AEI01	Non Class 1E	
NM0S0401D	E-146	003	Ch B (AT-20208 (Transducer))	Q	Computer Input AEI02	Non Class 1E	
NM1A0401C	E-023	001	Ch A (AT-20101 (Transducer))	Q	Computer Input ETI41	Non Class 1E	
NM1A0401C	E-023	001	Ch A (AT-20101 (Transducer))	Q	Computer Input ETI41 (Unit 2)	Non Class 1E	
NM1A0401C	E-023	001	Ch A (AT-20101 (Transducer))	Q	XI-00022A	Non Class 1E	
NM1A0401D	E-023	001	Ch A (AT-20104 (Transducer))	Q	XI-00018A	Non Class 1E	
NM1A0401D	E-023	001	Ch A (VT-20101 (Transducer))	Q	Computer Input ETE41	Non Class 1E	
NM1A0401D	E-023	001	Ch A (VT-20101 (Transducer))	Q	Computer Input ETE41 (Unit 2)	Non Class 1E	
NM1A0401E	E-023	001	Ch A (AT-20104 (Transducer))	Q	Computer Input EGI01	Non Class 1E	

R1

CABLES	DWG	SH	FROM	SEPGR(FRM)	TO	SEPGR(T0)	ISOLATED
NM1A0401E	E-023	001	Ch A (AT-20104 (Transducer))	Q	Computer Input EGI01 (Unit 2)	Non Class 1E	
NM1A0401F	E-023	001	Ch A (VT-20104 (Transducer))	Q	Computer Input EBE41 (Unit 2)	Non Class 1E	
NM1A0401F	E-023	001	Ch A (VT-20104 (Transducer))	Q	Computer Input EBE41	Non Class 1E	
NM1A0401G	E-023	001	Ch A (AT-20109 (Transducer))	Q	Computer Input	Non Class 1E	
NM1A0401H	E-023	001	Ch A (VT-20109 (Transducer))	Q	Computer Input	Non Class 1E	
NM1A0403G	E-023	001	Ch C (VT-20301 (Transducer))	Q	Computer Input ETE42	Non Class 1E	
NM1C0328C	E-135	015	Ch B (AT-20210 (Transducer))	Q	Computer Input TNI01	Non Class 1E	
NM1F0200F	E-179	001	PDT-C32-1N004B (Press Boundary)	Q	Computer Input NFL02	Non Class 1E	
NM1F0200F	E-179	001	PDT-C32-1N017 (Press Boundary)	Q	LR-C32-1R608	Non Class 1E	
NM1F0200H	E-179	001	PT-C32-1N008 (Press Boundary)	Q	PR-C32-1R609	Non Class 1E	
NM1F0200N	E-179	001	PDT-C32-1N004C (Press Boundary)	Q	LSH-C32-1K624C	Non Class 1E	
NM1I4202L	J-442	002	LY-14202A (Isolation Device)	Q	Computer Input	Non Class 1E	YES
NM1I4801C	J-448	002	R.G. 1.97 Cat 2 (FT-14806 See App I for Ev	Q	R.G. 1.97 Cat 2 (LI/FI 14806)	Q	
NM1I4801D	J-448	001	R.G. 1.97 Cat 2 (FE-14806 See App I for Ev	Q	R.G. 1.97 Cat 2 (FT-14806)	Q	
NM1I4801E	J-448	001	R.G. 1.97 Cat 2 (FE-14806 See App I for Ev	Q	R.G. 1.97 Cat 2 (FT-14806)	Q	
NM1I4801F	J-448	001	XY-14806 (Isolation Device)	Q	Computer Input NXF01	Non Class 1E	YES
NM1P11901	M1-B21-128	003	LT-B21-1N027 (Pressure Boundary)	Q	LI-B21-1R605	Non Class 1E	
NM1P14101	M1-B21-128	003	PDT-B31-1N015A (Press Boundary)	Q	PDI-B31-1R612A	Non Class 1E	
NM1P14101	M1-B21-128	003	PDT-B31-1N015B (Press Boundary)	Q	PDI-B31-1R612B	Non Class 1E	

R1

Q Loads in Contact with SLC

CABLES	DWG	SH	FROM	SEPGR(FRM)	TO	SEPGR(TO)	ISOLATED
NM1P1F101	M1-B21-128	003	LITS-B21-1N026D (Mech Sw See App C for	Q	LI-B21-1R604	Non Class 1E	
NM1P91601	M1-C12-110	016	APRM Trip Unit Contacts	Q	Isolator Card Z1	Non Class 1E	Contact to Coil
NM1P91603	M1-C12-110	015	APRM Trip Unit Contacts	Q	Isolator Card Z1	Non Class 1E	Contact to Coil
NM1PB4102	J-406	011	PDT-C32-1N004B (Press Boundary)	Q	LI-C32-1R606B	Non Class 1E	
NM1PB4102	J-406	012	PDT-C32-1N004A (Press Boundary)	Q	LI-C32-1R606A	Non Class 1E	
NM1PB4102	J-406	024	PT-C32-1N005 (Press Boundary)	Q	PI-C32-1R605	Non Class 1E	
NM1PB4103	J-406	013	PDT-C32-1N017 (Press Boundary)	Q	LR-C32-1R608	Non Class 1E	
NM1PB4105	M1-C32-17	003	PT-C32-1N008 (Press Boundary)	Q	FR-C32-1R609	Non Class 1E	
NM1PC1301	J-448	003	R.G. 1.97 Cat 2 (LI/FI-14806 See App I for	Q	LT-C41-1N001	Non Class 1E	
NM1PD4206	M1-C51-20	006	IRM Range Sw E	Q	C51-1K601E (IRM Mon)	Q	
NM1PD4213	M1-C51-20	006	IRM Range Sw C	Q	C51-1K601C (IRM Mon)	Q	
NM1PD4217	M1-C51-20	006	IRM Range Sw A	Q	C51-1K601A (IRM Mon)	Q	
NM1PD4X01	M1-C51-20	007	C51-1K601F (IRM Mon See App H for Eval.	Q	NR-C51-1R603D	Non Class 1E	
NM1PD4X01	M1-C51-20	007	C51-1K601B (IRM Mon See App H for Eval.	Q	NR-C51-1R603B	Non Class 1E	
NM1PD4X02	M1-C51-20	007	C51-1K601D (IRM Mon See App H for Eval	Q	NR-C51-1R603B	Non Class 1E	
NM1PD4X02	M1-C51-20	007	C51-1K601H (IRM Mon See App H for Eval.	Q	NR-C51-1R603D	Non Class 1E	
NM1PDF206	M1-C51-20	007	IRM Range Switch B	Q	IRM-C51-1K601B	Q	
NM1PDF207	M1-C51-20	007	IRM Range Switch F	Q	IRM-C51-1K601F	Q	
NM1PDF212	M1-C51-20	007	IRM Range Switch D	Q	IRM-C51-1K601D	Q	

R1

CABLES	DWG	SH	FROM	SEPGR(FRM)	TO	SEPGR(TO)	ISOLATED
NM1PDF213	M1-C51-20	007	IRM Range Switch H	Q	IRM-C51-1K601H	Q	
NM1PE4101	M1-C51-19	022	Aux Trip Unit AR12 (See App H for Eval.)	Q	NR-C51-1R603D	Non Class 1E	
NM1PE4103	M1-C51-19	018	Aux Trip Unit AR12 (See App H for Eval.)	Q	NR-C51-1R603B	Non Class 1E	
NM1PE4109	M1-C51-19	012	Aux Trip Unit AR31 (See App H for Eval.)	Q	NR-C51-1R603A	Non Class 1E	
NM1PE4109	M1-C51-19	014	Aux Trip Unit AR32 (See App H for Eval.)	Q	NR-C51-1R603B	Non Class 1E	
NM1PE4110	M1-C51-19	016	Aux Trip Unit AR41 (See App H for Eval.)	Q	NR-C51-1R603A	Non Class 1E	
NM1PE4111	M1-C51-19	020	Aux Trip Unit AR51 (See App H for Eval.)	Q	NR-C51-1R603C	Non Class 1E	
NM1PE4111	M1-C51-19	033	Driver Card Z33 (See App H for Eval.)	Q	NR-C51-1R603C	Non Class 1E	
NM1PE4112	M1-C51-19	033	Driver Card (See App H for Eval.)	Q	NR-C51-1R603C	Non Class 1E	
NM1PE4215	M1-C51-19	015	LPRM Card Dry Contact	Q	Indicating Light	Non Class 1E	Contact to Coil
NM1PE4216	M1-C51-19	010	LPRM CARD Z11	Q	Indicating Lights	Non Class 1E	Contact to Coil
NM1PE4218	M1-C51-19	027	LPRM Card Dry Contact	Q	Indicating Light	Non Class 1E	Contact to Coil
NM1PE4219	M1-C51-19	027	LPRM Card Dry Contact	Q	Indicating Light	Non Class 1E	Contact to Coil
NM1PE4223	M1-C51-19	011	LPRM Card Dry Contact	Q	Indicating Light	Non Class 1E	Contact to Coil
NM1PE4224	M1-C51-19	011	LPRM Card Dry Contact	Q	Indicating Light	Non Class 1E	Contact to Coil
NM1PE4238	M1-C51-19	017	LPRM Card Dry Contact	Q	Indicating Light	Non Class 1E	Contact to Coil
NM1PE4239	M1-C51-19	017	LPRM Card Dry Contact	Q	Indicating Light	Non Class 1E	Contact to Coil
NM1PE4245	M1-C51-19	019	LPRM Card Dry Contact	Q	Indicating Light	Non Class 1E	Contact to Coil
NM1PK0602	J-475	001	RISHH-D12-1K609A (See App G for Eval.)	Q	RR-D12-1R605	Non Class 1E	

R1

CABLES	DWG	SH	FROM	SEPGR(FRM)	TO	SEPGR(TO)	ISOLATED
NM1PK0602	J-475	002	RISHH-D12-1K615A (See App G for Eval.)	Q	RR-D12-1R607	Non Class 1E	
NM1PK0602	J-475	003	RISHH-D12-1K616A (See App G for Eval.)	Q	RR-D12-1R608	Non Class 1E	
NM1PK0602	J-478	001	RISHH-D12-0K617A (See App G for Eval.)	Q	RR-D12-0R609	Non Class 1E	
NM1PK0602	J-478	002	RISHH-D12-0K618A (See App G for Eval.)	Q	RR-D12-0R610	Non Class 1E	
NM1PK0603	J-439	009	RY-13962C (Isoaltion Device)	Q	RR-D12-1R603	Non Class 1E	YES
NM1PK3301	J-439	008	RY-13962B (Isoaltion Device)	Q	RR-D12-1R603	Non Class 1E	YES
NM1PK3301	J-439	010	RY-13962D (Isoaltion Device)	Q	RR-D12-1R603	Non Class 1E	YES
NM1PK3302	J-475	001	RISHH-D12-1K609A (See App G for Eval.)	Q	RR-D12-1R605	Non Class 1E	
NM1PK3302	J-475	005	RISHH-D12-0K618A (See App G for Eval.)	Q	RR-D12-0R610	Non Class 1E	
NM1PK3302	J-475	005	RISHH-D12-1K615B (See App G for Eval.)	Q	RR-D12-1R607	Non Class 1E	
NM1PK3302	J-475	006	RISHH-D12-1K616B (See App G for Eval.)	Q	RR-D12-1R608	Non Class 1E	
NM1PK3302	J-478	001	RISHH-D12-0K617A (See App G for Eval.)	Q	RR-D12-0R609	Non Class 1E	
NM1PM1307	J-451	009	FT-E11-1N013 (Press Boundary)	Q	FI-E11-1R607	Non Class 1E	
NM1PQ4101	M1-C51-20	006	C51-1K601A (IRM Mon See App H for Eval	Q	NR-C51-1R603A	Non Class 1E	
NM1PQ4101	M1-C51-20	006	C51-1K601E (IRM Mon See App H for Eval.	Q	NR-C51-1R603C	Non Class 1E	
NM1PQ4102	M1-C51-20	006	C51-1K601C (IRM Mon See App H for Eval.	Q	NR-C51-1R603A	Non Class 1E	
NM1PQ4102	M1-C51-20	006	C51-1K601G (IRM Mon See App H for Eval	Q	NR-C51-1R603C	Non Class 1E	
NM1PR4101	M1-G33-153	004	FT-G33-1N037 (Press Boundary)	Q	FI-G33-1R610	Non Class 1E	
NM1PR7N01	M1-G33-153	004	FY-14476 (Isolation Device)	Q	Computer Analog Input	Non Class 1E	YES

R1

Q Loads in Contact with SLC

CABLES	DWG	SH	FROM	SEPGR(FRM)	TO	SEPGR(TO)	ISOLATED
NM1Q0045L	J-457	015	NIT-15725A (Isolation Device)	Q	Computer Input NM602	Non Class 1E	YES
NM1Q0045L	J-457	015	NIT-15725A (Isolation Device)	Q	Computer Input NM118	Non Class 1E	YES
NM1Q0045M	J-457	015	NIT-15725A (Isolation Device)	Q	SPDS Input NM6002Z	Non Class 1E	YES
NM1Q0048L	J-457	016	NIT-15725B (Isolation Device)	Q	Computer Input	Non Class 1E	YES
NM1Q0048L	J-457	016	NIT-15725B (Isolation Device)	Q	Computer Input NM117	Non Class 1E	YES
NM1Q0048L	J-457	016	NIT-15725B (Isolation Device)	Q	Computer Input NM601	Non Class 1E	YES
NM1Q0048M	J-457	016	NIT-15725B (Isolation Device)	Q	SPDS Input NM6001Z	Non Class 1E	YES
NM1Q0048M	J-457	016	NIT-15725B (Isolation Device)	Q	Computer Input	Non Class 1E	YES
NM1Q0206C	J-448	003	PT-C41-1N004 (Press Boundary)	Q	PI-C41-1N004	Non Class 1E	
NM1Q0250C	J-442	010	FT--B21-1N033D (Press Boundary)	Q	FY-B21-1K605D	Non Class 1E	
NM1Q0250D	J-442	010	FT-B21-1N033B (Press Boundary)	Q	FY-B21-1K605B	Non Class 1E	
NM1Q0250D	J-442	010	PDT-B21-1N032 (Press Boundary)	Q	XR-B21-1R613	Non Class 1E	
NM1Q0250E	J-442	006	FT-B21-1N034B (Press Boundary)	Q	PDI-B21-1R608B	Non Class 1E	
NM1Q0250E	J-442	006	FT-B21-1N034D (Press Boundary)	Q	PDI-B21-1R608D	Non Class 1E	
NM1Q0250E	J-442	006	FT-B21-1N034F (Press Boundary)	Q	PDI-B21-1R608F	Non Class 1E	
NM1Q0250E	J-442	006	FT-B21-1N034H (Press Boundary)	Q	PDI-B21-1R608H	Non Class 1E	
NM1Q0250F	J-442	005	FT-B21-1N034U (Press Boundary)	Q	PDI-B21-1R608U	Non Class 1E	
NM1Q0250F	J-442	005	FT-B21-1N034W (Press Boundary)	Q	PDI-B21-1R608W	Non Class 1E	
NM1Q0250F	J-442	007	FT-B21-1N034M (Press Boundary)	Q	PDI-B21-1R608M	Non Class 1E	

R1

CABLES	DWG	SH	FROM	SEPGR(FRM)	TO	SEPGR(TO)	ISOLATED
NM1Q0250F	J-442	007	FT-B21-1N034P (Press Boundary)	Q	PDI-B21-1R608P	Non Class 1E	
NM1Q0250F	J-442	007	FT-B21-1N034S (Press Boundary)	Q	PDI-B21-1R608S	Non Class 1E	
NM1Q0300C	E-169	001	Ch A (AT-20107 (Transducer))	Q	Computer Input NDI01	Non Class 1E	
NM1Q0300D	E-169	001	Ch A (AT-20107 (Transducer))	Q	Computer Input NDI01	Non Class 1E	
NM1Q0614P	J-444	010	FT-G33-1N037 (Press Boundary)	Q	FI-G33-1R610	Non Class 1E	
NM1Q0801C	E-156	001	Ch A (AT-20105 (Transducer))	Q	Computer Input NSI01	Non Class 1E	
NM1Q0801D	E-156	001	Ch A (AT-20105 (Transducer))	Q	Computer Input NSI01	Non Class 1E	
NM1Q0802D	E-156	002	Ch B (AT-20205 (Transducer))	Q	Computer Input NSI01	Non Class 1E	
NM1Q1217L	E-304	017	XY-14201F (Isolation Device)	Q	SPDS NM5006Z	Non Class 1E	YES
NM1Q1217M	E-304	017	XY-14201A (Isolation Device)	Q	SPDS NM5001Z	Non Class 1E	YES
NM1Q1217M	E-304	017	XY-14201B (Isolation Device)	Q	SPDS NM5002Z	Non Class 1E	YES
NM1Q1217N	E-304	017	XY-14201D (Isolation Device)	Q	SPDS NM5004Z	Non Class 1E	YES
NM1Q1217P	E-304	017	XY-14201C (Isolation Device)	Q	SPDS NM5003Z	Non Class 1E	YES
NM1Q1217Q	E-304	017	XY-14201E (Isolation Device)	Q	SPDS NM5005Z	Non Class 1E	YES
NM1Q1604C	J-442	016	LITS-B21-1N026D (Mech Sw See App C for	Q	LI-B21-1R604	Non Class 1E	
NM1Q3000C	E-153	001	Ch A (AT-20102 (Transducer))	Q	Computer Input NHI01	Non Class 1E	
NM1Q3000D	E-153	001	Ch A (AT-20102 (Trnasducer))	Q	Computer Input NHI01	Non Class 1E	
NM1Q3001D	E-153	003	Ch B (AT-20202 (Trnasducer))	Q	Computer Input NHI02	Non Class 1E	
NM1Q3066J	E-153	035	FT-E11-1N013 (Press Boundary)	Q	FI-E11-1R607	Non Class 1E	

R1

Q Loads in Contact with SLC

CABLES	DWG	SH	FROM	SEPGR(FRM)	TO	SEPGR(TO)	ISOLATED
NM1Q3066J	E-153	035	FT-E11-1N013 (Press Boundary)	Q	Computer Input NHF03	Non Class 1E	
NM1V1600C	E-213	001	Ch A (AT-20110 (Transducer))	Q	Computer Input MVI03	Non Class 1E	
NM1V1600D	E-213	001	Ch A (AT-20110 (Transducer))	Q	Computer Input MVI03	Non Class 1E	
NM1V1601D	E-213	002	Ch B (AT-20211 (Transducer))	Q	Computer Input MVI04	Non Class 1E	
NM1V2600C	E-216	001	Ch A (AT-20103 (Transducer))	Q	Computer Input MVI01	Non Class 1E	
NM1V2600D	E-216	001	Ch A (AT-20108 (Transducer))	Q	Computer Input MVI01	Non Class 1E	
NM1V2601D	E-216	002	Ch B (AT-20208 (Transducer))	Q	Computer Input MVI02	Non Class 1E	
NM2C0328C	E-135	039	Ch C (AT-20309 (Transducer))	Q	Computer Input TNI51	Non Class 1E	
NM2M0109C	J-411	001	XY-01109A1 (Isolation Device)	Q	Computer Analog Input	Non Class 1E	YES
NM2M0110C	J-411	003	XY-01109B1 (Isolation Device)	Q	Computer Input	Non Class 1E	YES

R1