50-387 | 388

UNITED STATES
NUCLEAR REGULATORY COMMISSION
WASHINGTON, D.C. 20555-0001

November 24, 1996

LICENSEE: Pennsylvania Power and Light Company

FACILITY: Susquehanna Steam Electric Station (SSES), Units 1 and 2

SUBJECT: SUMMARY OF SEPTEMBER 12, 1996 MEETING TO DISCUSS THE DRY CASK STORAGE PROGRAM AT SSES, UNITS 1 AND 2

On September 12, 1996, a meeting was held between members of the Office of Nuclear Reactor Regulation (NRR), Office of Nuclear Material Safety and Safeguards (NMSS), Region I, and Pennsylvania Power & Light Company (PP&L or the licensee) to discuss the licensee's plans for the construction and implementation of an on-site dry cask spent fuel storage facility at the Susquehanna Steam Electric Station (SSES) located in Berwick, Pennsylvania. Enclosure 1 is a list of the meeting attendees.

During the first portion of the meeting, PP&L staff provided a presentation and a discussion of the overall history of the program initiated in 1992 focusing on completed and planned milestones. Enclosure 2 is a copy of the slides outlining the information that was discussed.

Significantly noted in this portion of the meeting were the following facts:

- the licensee is adding the storage capacity for spent fuel under the general license for the NUHOMS horizontal storage design,
- during the site and design selection process, PP&L established a high level of public participation and has not received any local feedback of a negative nature related to its plans to store spent fuel,
- the site will not run out of spent fuel pool storage in the current pool until after 2000, but the dry cask facility is planned for initial use in the fall of 1997,
- PP&L quality assurance staff has played an active roll in the oversite of the design process being implemented by Vectra, the vendor,
- the licensee has routinely contacted other licensees and visited sites using the dry cask storage technology to keep abreast of lessons learned during the licensing and implementation process,
- the first set of draft procedures have been completed and are planned to be in final draft version by December of 1996,
- heavy loads analyses are expected to be completed by the end of 1996 with sensitivity to the lessons learned at Oyster Creek,
- the licensee indicated that it would inform the staff when significant analyses had been completed to facilitate staff inspection planning and implementation, and

DF01

270030

PAGE FULL (BLANK) ONLY

- it was noted that PP&L had not included the need to provide the 72.82e report to the staff in its overall schedule and it was agreed that this would be added.

The second portion of the meeting was dedicated to the staff's comments on regulatory requirements, lessons learned from recent licensing experiences, and comments on the concrete pad design. Comments included the following:

- the value of constant and meaningful communication between licensee and regulator was emphasized regarding Part 70 requirements, fabrication and installation schedules, and testing and training activities,

- the value of conducting dry runs to enhance the effectiveness of the training process and to validate the adequacy of procedures,

- testing programs need to be well planned and executed, noting the experience at Point Beach and Prairie Island,

- the Point Beach Augmented Inspection Team report should be reviewed for lessons learned,

- fuel loading and unloading usually produces a great deal of public interest based on experience by other licensees,

- planning for unloading considering both Part 50 and 70 requirements should be done well in advance to avoid the need for exigent amendments,

- recent problems have been identified with particular thermal shield paint used in the casks and should be considered in the design process, and

- a management level meeting to discuss an overview of the project will need to be scheduled with PP&L in the future.

NRR staff raised a number of questions on the adequacy of the design of the concrete pad which will support the casks and was provided a copy of the structural analyses that were performed by Vectra. It was not clear whether the nature of the questions related to the methodology that was used to determine the minimum thickness of the pad to address static loads had a

regulatory basis in Part 72. However, the staff indicated that it would review the information, provide input to a Region I inspection report and would return the analyses to the licensee subsequent to the review.

?s/

Chester Poslusny, Senior Project Manager
Project Directorate I-2
Division of Reactor Projects - I/II
Office of Nuclear Reactor Regulation

Docket Nos. 50-387/388

Enclosures: 1. Meeting Attendees List
2. Licensee's Handouts

cc w/encls: See next page

DISTRIBUTION: *w/Enclosures 1 and 2
HARD COPY
*Docket File
*PUBLIC
*PDI-2 Reading
OGC
ACRS
*WPasciak, RGN-I

E-MAIL
WRussell/FMiraglia
RZimmerman
SVarga
JZwolinski
JStolz
*CPoslusny
MO'Brien
EJordan (JKR)
PNarbut
YKim
ELeeds
TMcGinty
WReckley
DPersinko
GBagchi
BThomas
FSturz
SPindale, RGN-I
CAnderson, RGN-I
WDean

OFFICE	PDI-2/PM	PDI-2/LA	PDI-2/D		
NAME	CPoslusny:rb	MO'Brien	JStolz		
DATE	11/14/96	11/14/96	11/20/96		

OFFICIAL RECORD COPY DOCUMENT NAME: SU9-12.MTS

regulatory basis in Part 72. However, the staff indicated that it would review the information, provide input to a Region I inspection report and would return the analyses to the licensee subsequent to the review.

Chester Poslusny, Senior Project Manager
Project Directorate I-2
Division of Reactor Projects - I/II
Office of Nuclear Reactor Regulation

Docket Nos. 50-387/388

Enclosures: 1. Meeting Attendees List
2. Licensee's Handouts

cc w/encls: See next page

Pennsylvania Power & Light Company

Susquehanna Steam Electric Station,
Units 1 & 2

cc:

Jay Silberg, Esq.
Shaw, Pittman, Potts & Trowbridge
2300 N Street N.W.
Washington, D.C. 20037

Bryan A. Snapp, Esq.
Assistant Corporate Counsel
Pennsylvania Power & Light Company
2 North Ninth Street
Allentown, Pennsylvania 18101

Mr. J. M. Kenny
Licensing Group Supervisor
Pennsylvania Power & Light Company
2 North Ninth Street
Allentown, Pennsylvania 18101

Mr. K. Jenison
Senior Resident Inspector
U. S. Nuclear Regulatory Commission
P.O. Box 35
Berwick, Pennsylvania 18603-0035

Mr. William P. Dornsife, Director
Bureau of Radiation Protection
Pennsylvania Department of
Environmental Resources
P. O. Box 8469
Harrisburg, Pennsylvania 17105-8469

Mr. Jesse C. Tilton, III
Allegheny Elec. Cooperative, Inc.
212 Locust Street
P.O. Box 1266
Harrisburg, Pennsylvania 17108-1266

Chairman
Board of Supervisors
738 East Third Street
Berwick, PA 18603

Regional Administrator, Region I
U.S. Nuclear Regulatory Commission
475 Allendale Road
King of Prussia, Pennsylvania 19406

Mr. Harold G. Stanley
Superintendent of Plant
Susquehanna Steam Electric Station
Pennsylvania Power and Light Company
Box 467
Berwick, Pennsylvania 18603

Mr. Herbert D. Woodeshick
Special Office of the President
Pennsylvania Power and Light Company
Rural Route 1, Box 1797
Berwick, Pennsylvania 18603

George T. Jones
Manager-Engineering
Pennsylvania Power and Light Company
2 North Ninth Street
Allentown, Pennsylvania 18101

Mr. Robert G. Byram
Senior Vice President-Nuclear
Pennsylvania Power & Light Company
2 North Ninth Street
Allentown, Pennsylvania 18101

Dr. Judith Johnsrud
National Energy Committee
Sierra Club
433 Orlando Avenue
State College, PA 16803

MEETING ATTENDEES LIST

DRY CASK STORAGE PROGRAM MEETING

SEPTEMBER 12, 1996

NAME	ORGANIZATION
J. Stolz	NRC/NRR
C. Poslusny	NRC/NRR
Y. Kim	NRC/NRR
W. Reckley	NRC/NRR
G. Bagchi	NRC/NRR
B. Thomas	NRC/NRR
P. Narbut	NRC/NMSS
F. Sturz	NRC/NMSS
E. Leeds	NRC/NMSS
T. McGinty	NRC/NMSS
D. Persinko	NRC/NMSS
S. Pindale	NRC/RGN-I
C. Anderson	NRC/RGN-I
R. Saccone	PP&L
R. Matthews	PP&L
D. Reinsmith	PP&L
K. Kelenski	PP&L
R. Sgarro	PP&L
A. Maron	PP&L
D. Parsons	PP&L
B. Maiers	PADEP-DRP
A. Nelson	NEI
T. Wittig	Vectra

ENCLOSURE 1

SPENT FUEL STORAGE
WORKING LEVEL MEETING

US NRC
ROCKVILLE, MD

SEPTEMBER 12, 1996

ENCLOSURE 2

SPENT FUEL STORAGE AT SUSQUEHANNA STEAM ELECTRIC STATION

WORKING LEVEL MEETING WITH THE
U.S. NRC

September 12, 1996

Rockville, MD

AGENDA

- **Introductions**
- **PP&L's Plans for Spent Fuel Storage at Susquehanna Steam Electric Station**
  - Management Perspective ..... R. A. Saccone
    Manager-Nuclear Modifications
  - Project Overview ..... K. J. Kelenski
    Project Manager
  - Quality Assessment ..... R. E. Matthews
    Sr. Analyst-Nuclear Assessment Services
- **NRC Licensing Requirements**
- **NRC Planned Inspection Activities**

MANAGEMENT PERSPECTIVE

- PP&L has a Strong Record Regarding the Design and Operation of Susquehanna. Standards Applied to this Project Include:
  - Strong Management Involvement and Commitment of Resources
  - Proactive Approach
  - Good Public Involvement
  - Engineering Accountability
  - Lessons Learned
  - Regulatory Compliance
  - Strong Quality Assurance Program/Assessment

INTRODUCTION

- Susquehanna Steam Electric Station - 2 Unit Site, each consisting of a General Electric Boiling Water Reactor, BWR/4 with a 1150 MWe nominal rating.

- Rated core thermal power is 3441 MWt with a corresponding net electrical output of 1122 MWe for Unit 1 and 1126 MWe for Unit 2.

- Unit 1 original fuel load - July 27, 1982; commercial operation June 8, 1983.

- Unit 2 original fuel load - March 28, 1984; commercial operation February 12, 1985.

INTRODUCTION *(CONTINUED)*

- Each Unit has its own spent fuel storage pool.
- Each pool has 24 high density storage racks equating to a storage capacity of 2840 fuel assemblies plus 10 multipurpose cavities for storage of control rods, control rod guide tubes, and defective fuel containers.
- Current Storage:
  - Unit 1 - 1832 Fuel Assemblies
  - Unit 2 - 1696 Fuel Assemblies
  - Roughly 304 fuel assemblies are offloaded per outage per Unit
- Project Plan calls for the first fuel moves to the Independent Facility to begin in September 1997.

PROJECT ORGANIZATION

SPENT FUEL STORAGE PROJECT

PROJECT ORGANIZATION

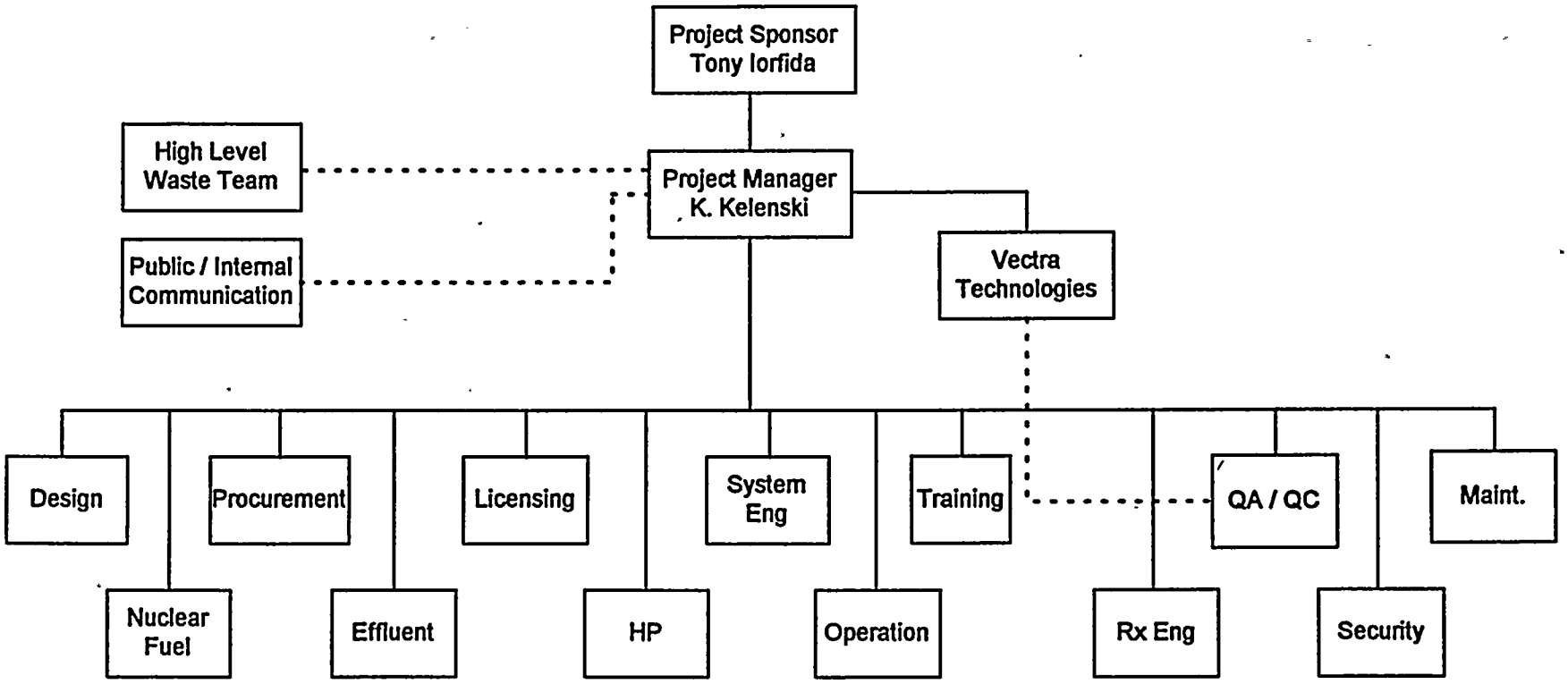

EVALUATIONS PERFORMED TO SUPPORT PROACTIVE APPROACH

- Siting Report - September, 1992
- Phase I Technical Assessment - February, 1993
- Performance Specification Developed for Reracking and Dry Cask Storage - June, 1993
- Final Technical Assessment Completed - October, 1994
- Awarded Contract - January 1995

COMMUNICATIONS

- A Public Involvement Program was initiated to ensure Public awareness and to solicit feedback.
- Various methods of presenting PP&L's plans were implemented:
  - Presentations to the Susquehanna Citizens Committee
  - Personal Notification of Area Officials
  - Media Day
  - Presentations to Volunteer Organizations which support the Susquehanna Emergency Response Organization
  - Articles in the Susquehanna Quarterly Newsletter which is distributed to the surrounding communities

DRY STORAGE TECHNOLOGY AT SSES

- VECTRA "NUHOMS" (Horizontal Storage Technology)
- Certificate of Compliance (Certificate Number 72-1004)
- Implementing under General License

NUHOMS - KEY SYSTEM COMPONENTS

- Dry Shielded Canister (DSC's)
- Horizontal Storage Modules (HSM's)
- Transfer Cask

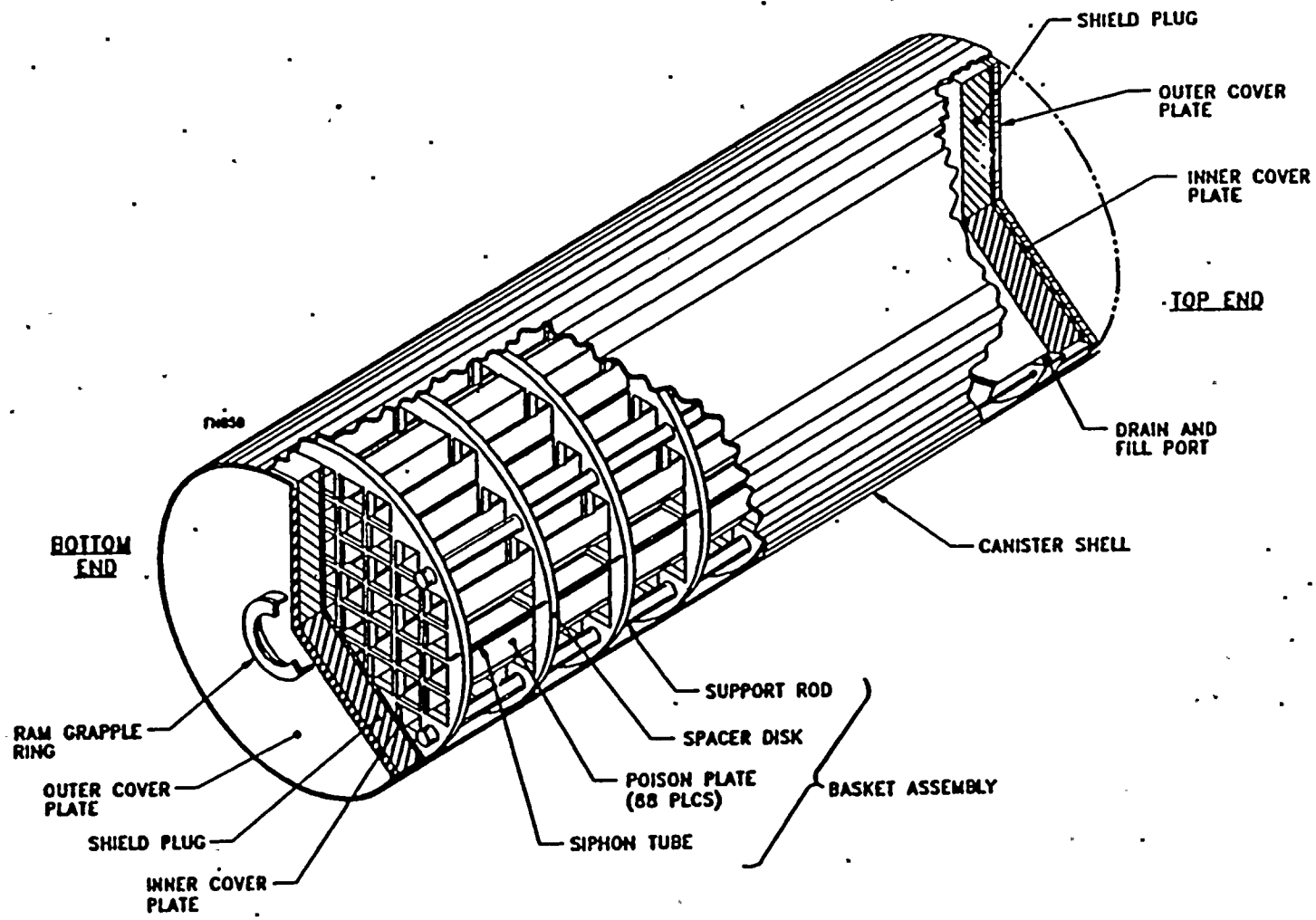

Figure 2.2-2

NUHOMS®-52B Dry Shielded Canister Assembly Components

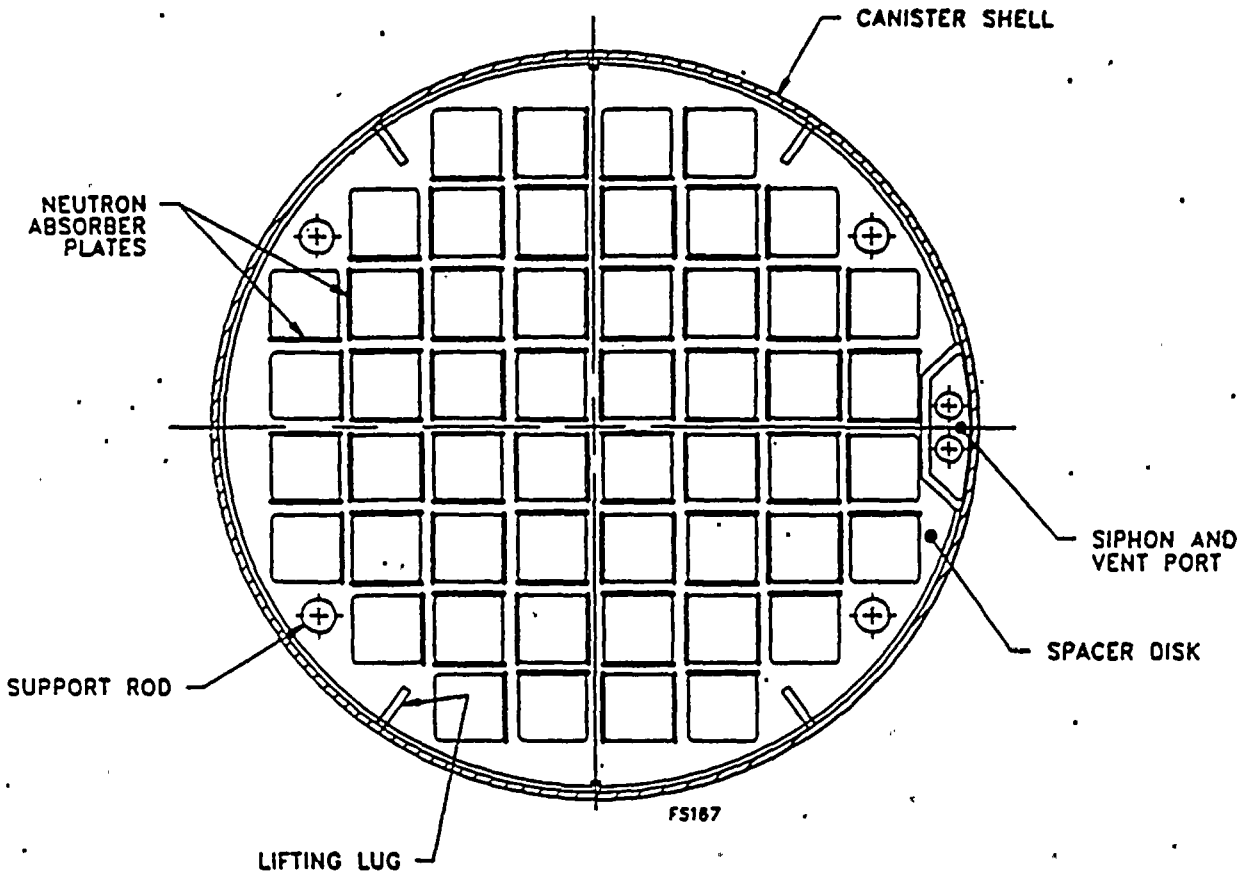

Figure 2.2-4

NUHOMS®-52B Dry Shielded Canister Cross-Section

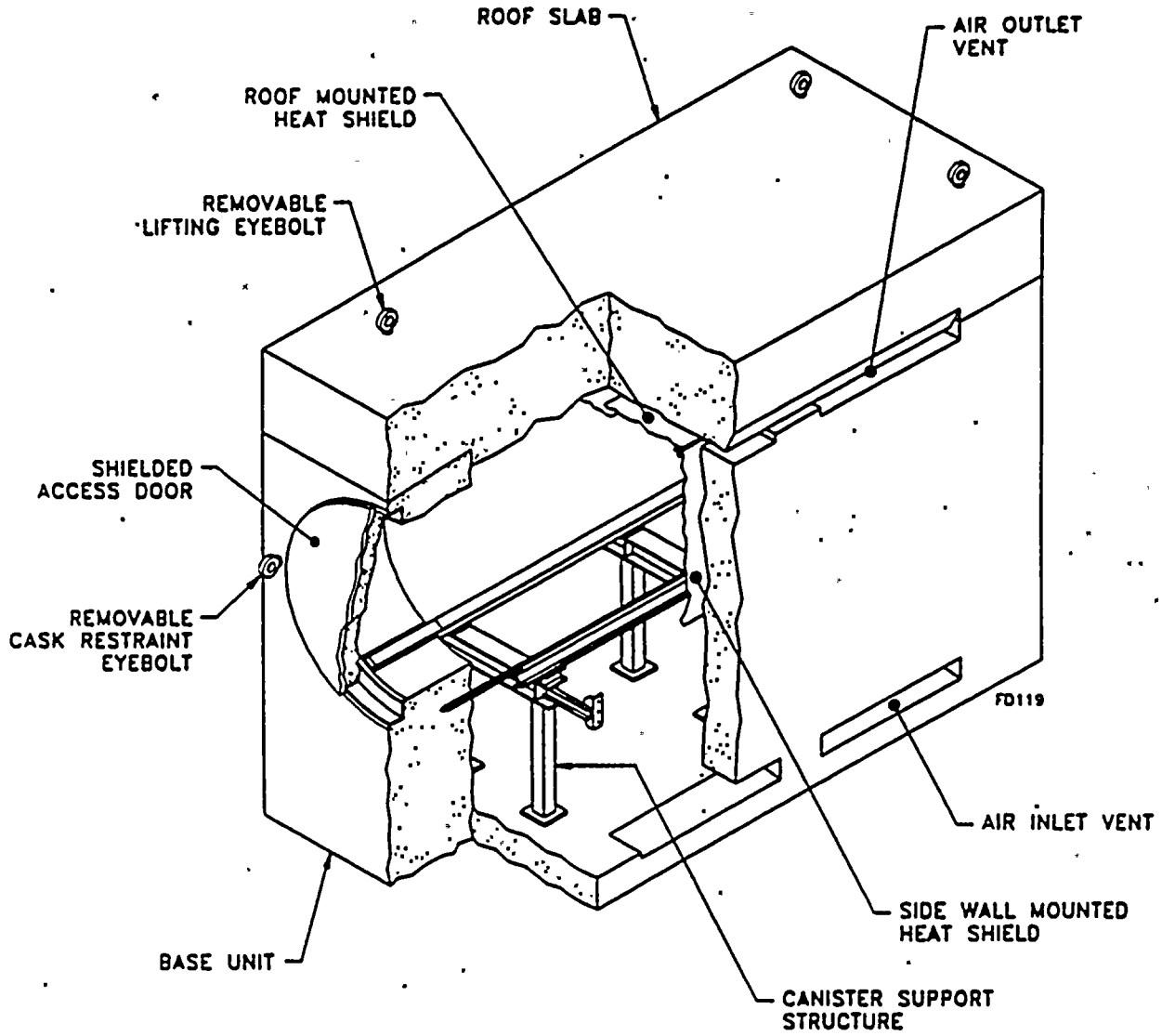

Figure 2.3-1

Prefabricated NUHOMS® Module

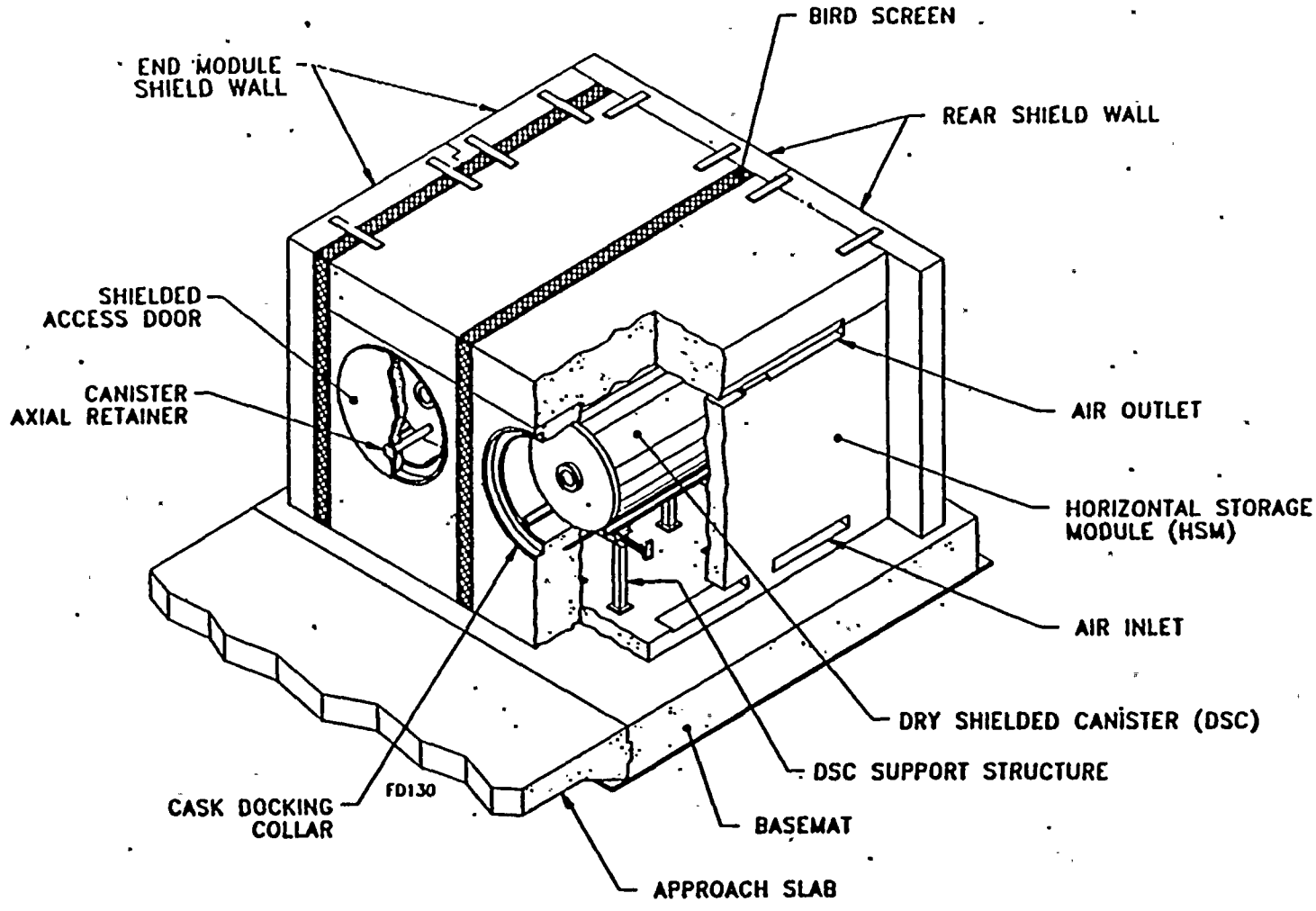

Figure 2.3-5

Prefabricated NUHOMS® Module - Single Module Row Arrangement

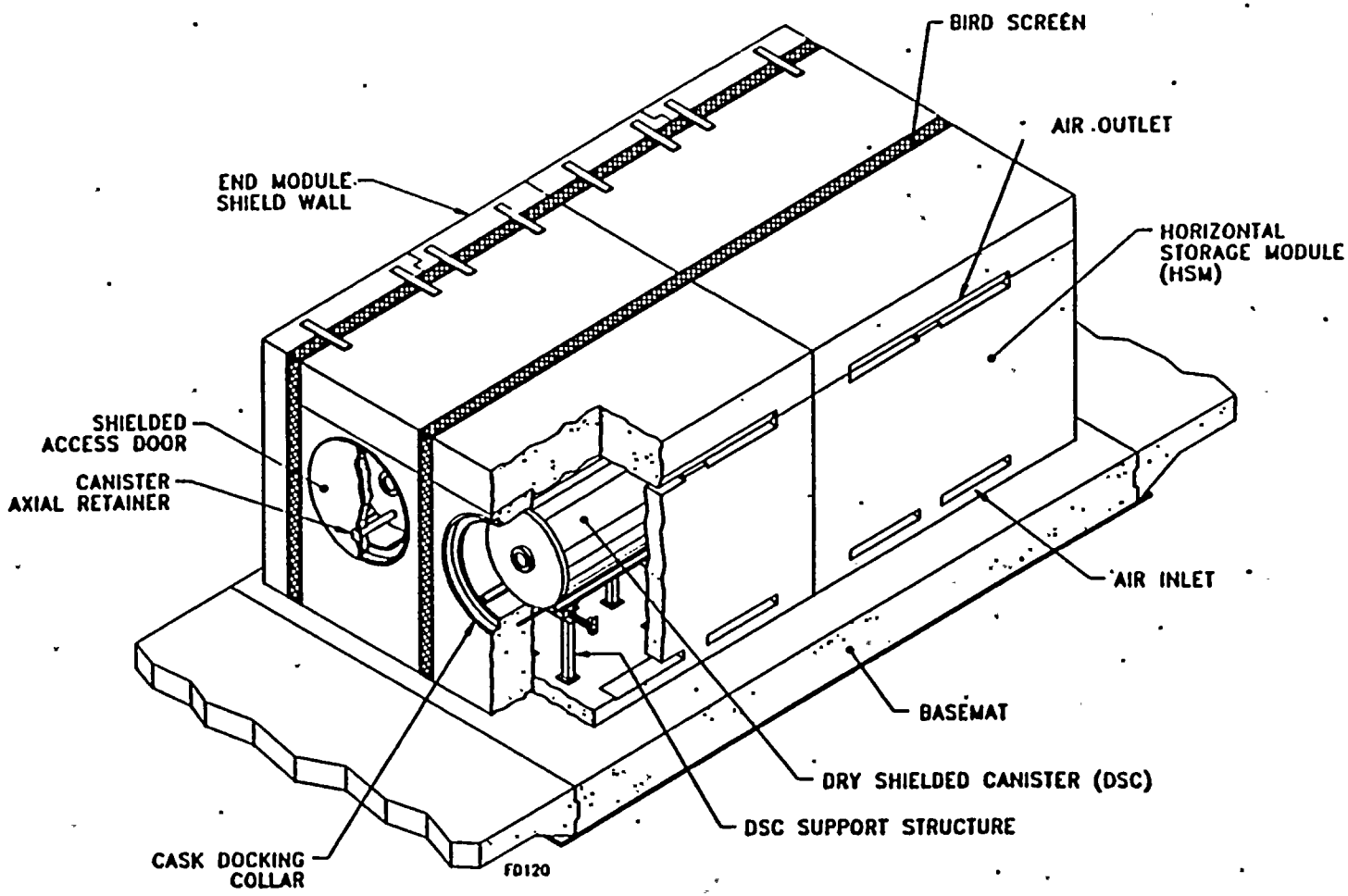

Figure 2.3-6

Prefabricated NUHOMS® Module - Double Module Row Arrangement

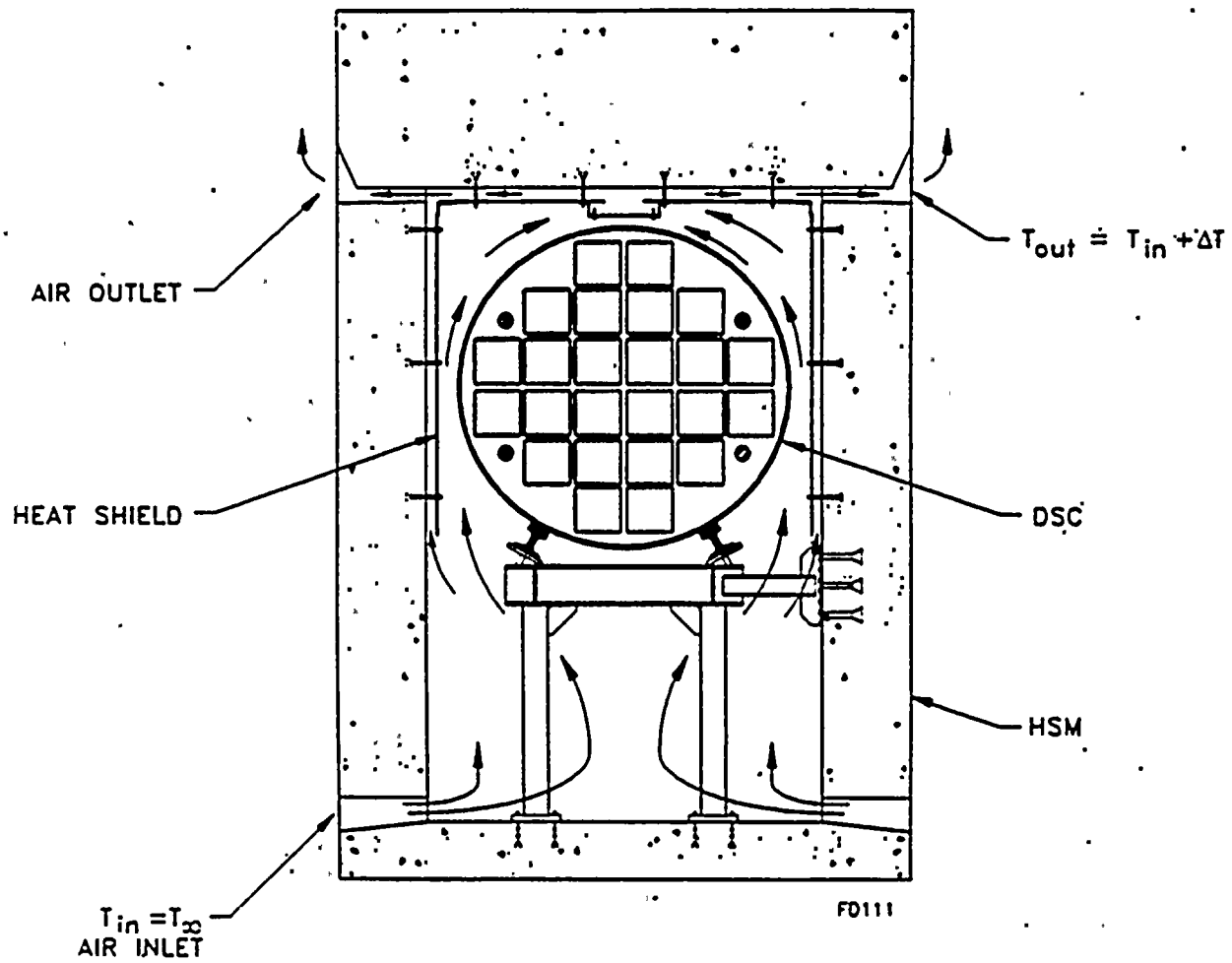

Figure 2.3-2

Prefabricated NUHOMS® Module Air Flow Diagram

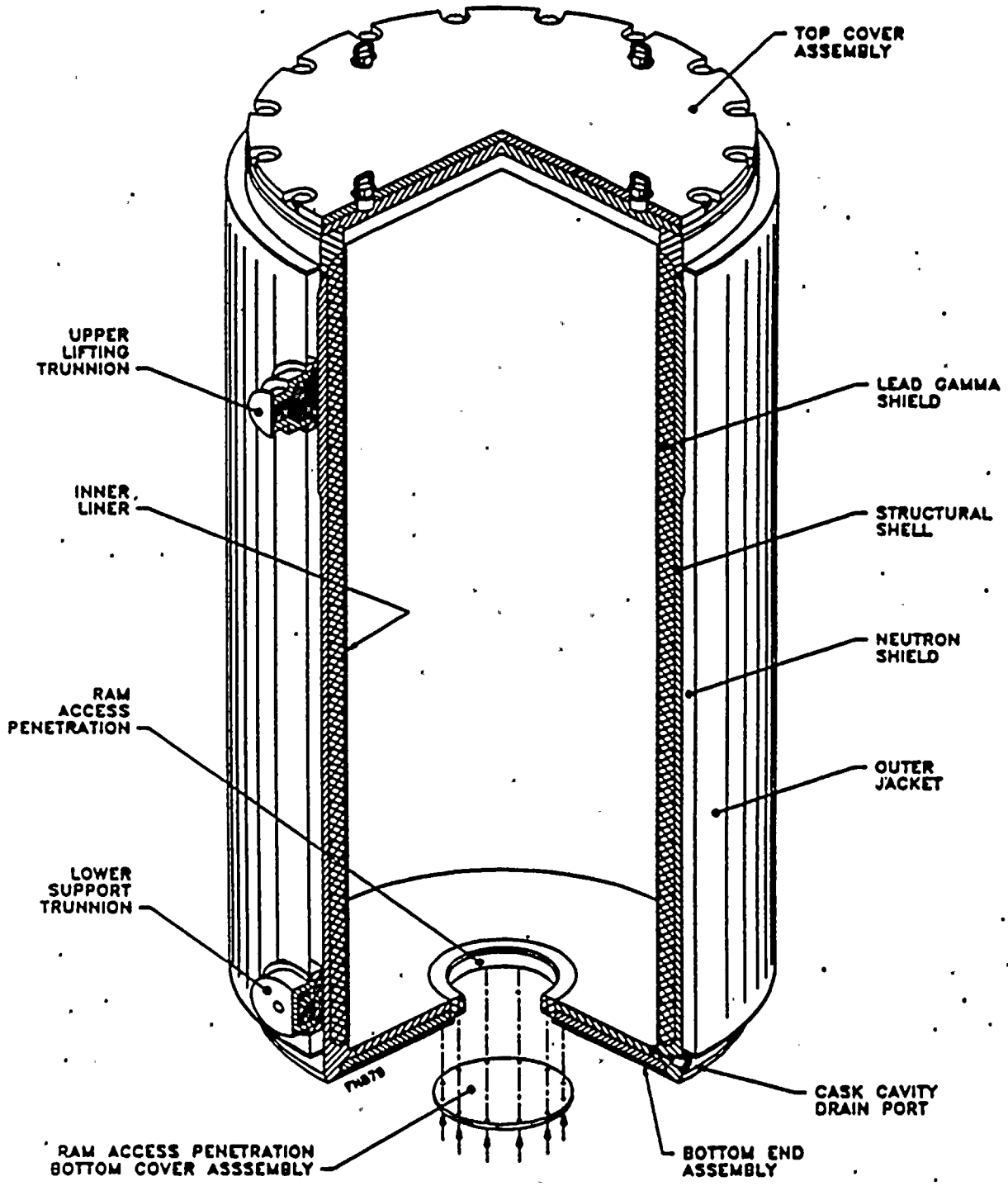

Figure 2.4-1

NUHOMS® On-Site Transfer Cask

SSES SPENT FUEL STORAGE FACILITY

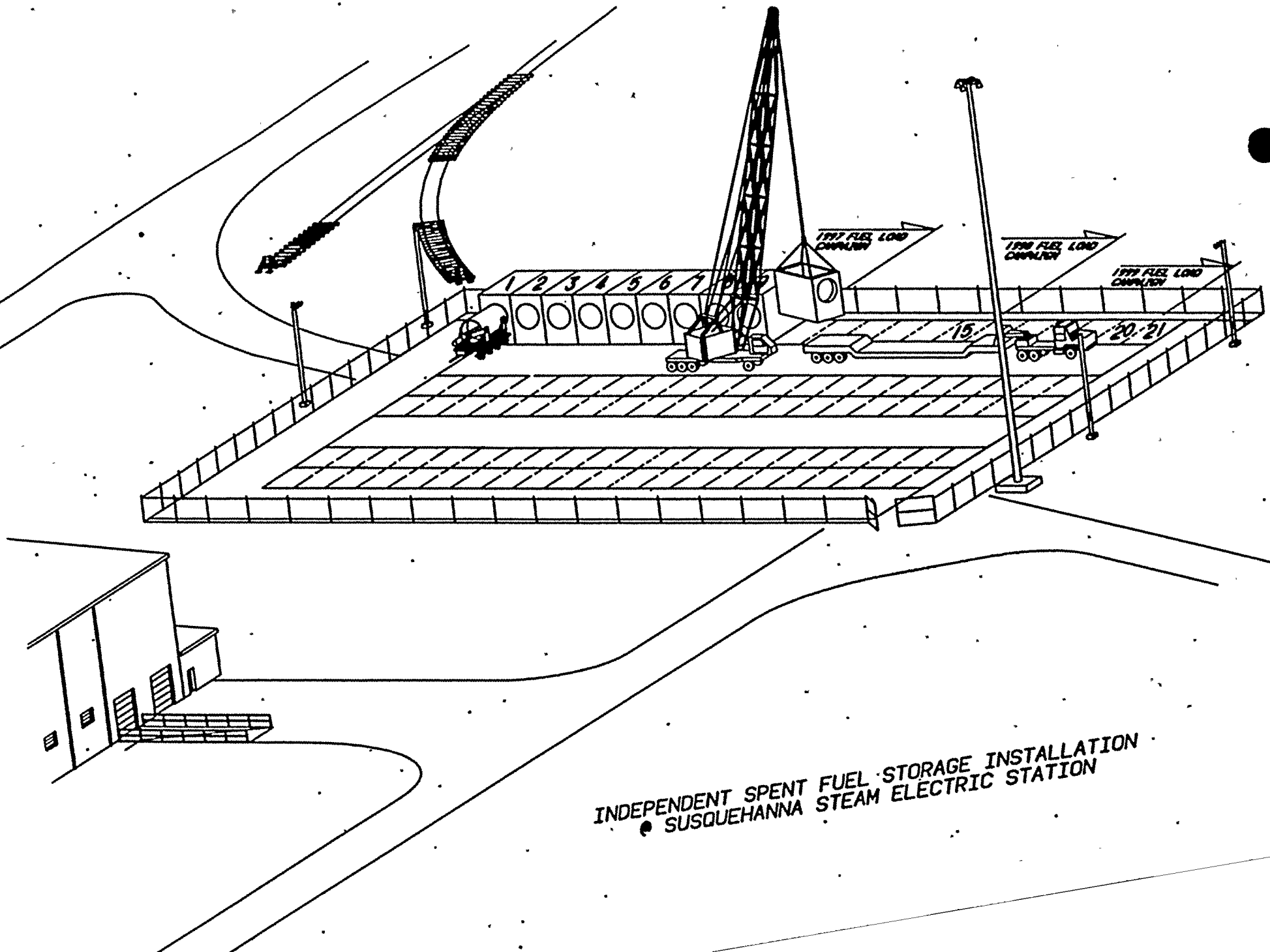

INDEPENDENT SPENT FUEL STORAGE INSTALLATION
SUSQUEHANNA STEAM ELECTRIC STATION

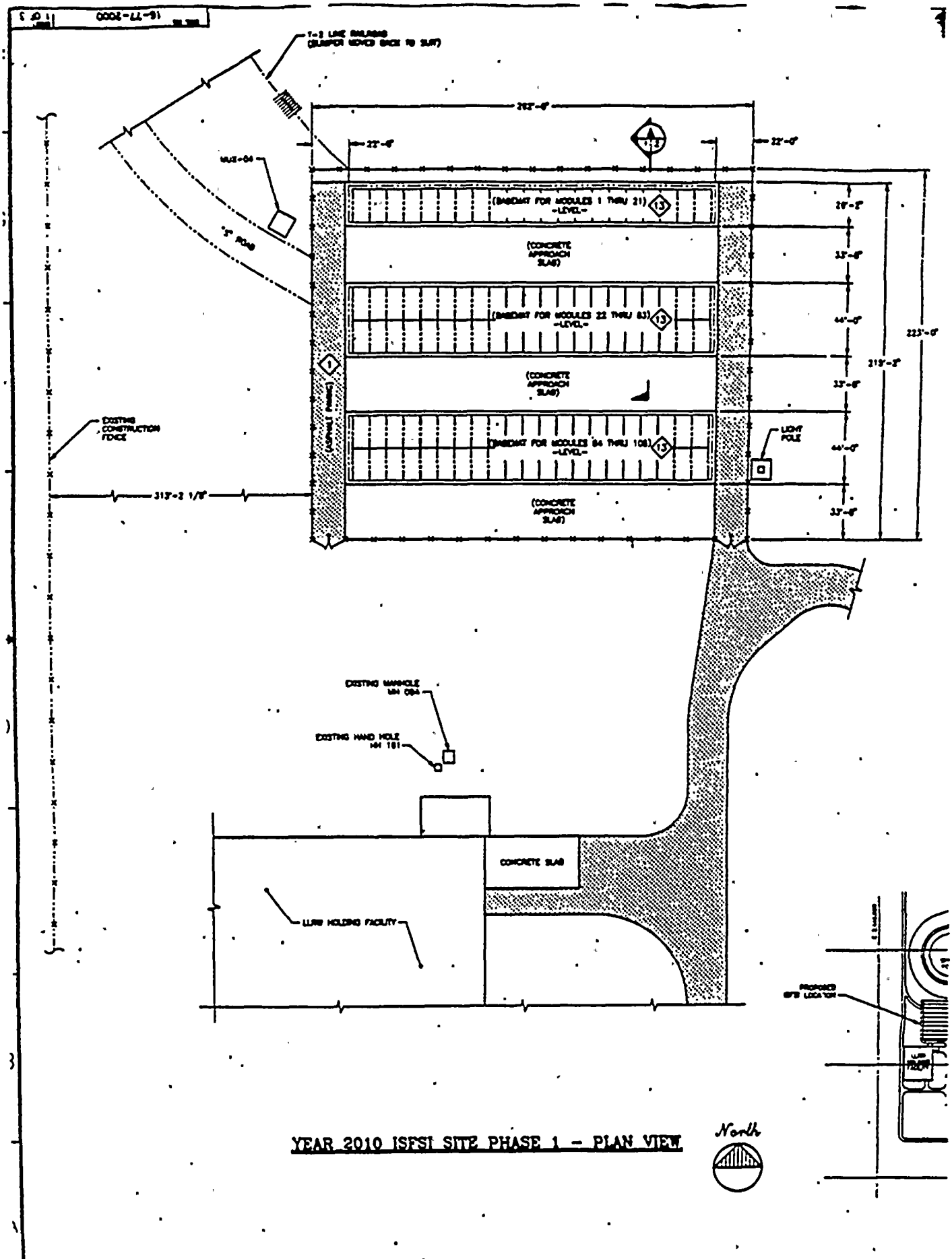

YEAR 2010 ISFSI SITE PHASE 1 – PLAN VIEW

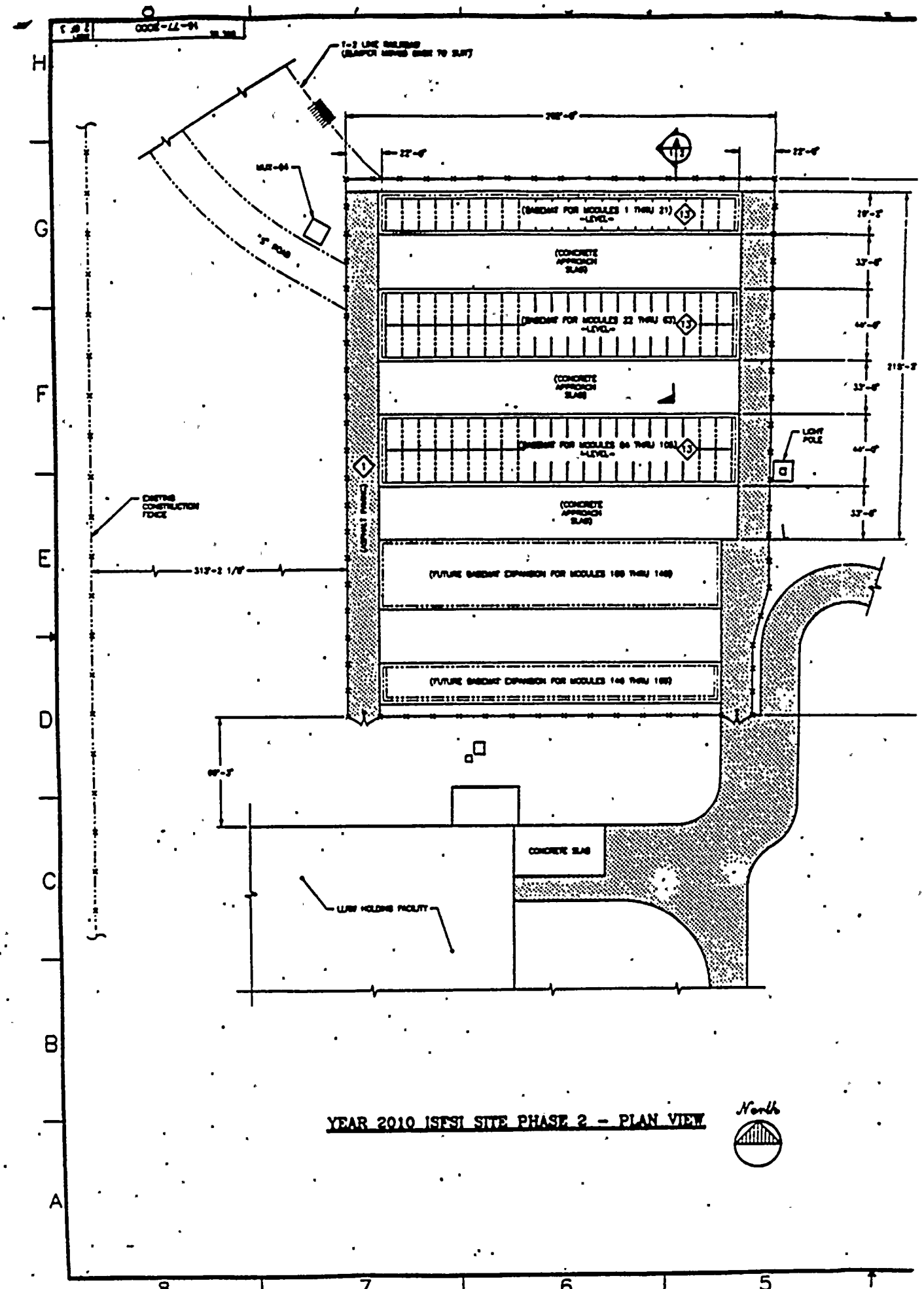
1-2 LINE RAILROAD
(BUMPER MOVED BACK TO SUIT)
MUX-04
"S" POND
(BASEMENT FOR MODULES 1 THRU 21)
-LEVEL-
(CONCRETE APPROACH SLAB)
(BASEMENT FOR MODULES 22 THRU 63)
-LEVEL-
(CONCRETE APPROACH SLAB)
(BASEMENT FOR MODULES 64 THRU 106)
-LEVEL-
LIGHT POLE
(CONCRETE APPROACH SLAB)
EXISTING CONSTRUCTION FENCE
(FUTURE BASEMENT EXPANSION FOR MODULES 106 THRU 146)
(FUTURE BASEMENT EXPANSION FOR MODULES 146 THRU 186)
CONCRETE SLAB
LLRW HOLDING FACILITY
YEAR 2010 ISFSI SITE PHASE 2 - PLAN VIEW
North

STRATEGY FOR IMPLEMENTATION

◆ Design

Note: Lessons Learned based on experiences at other utilities have been incorporated into the SSES design, complementing a thorough PP&L Engineering review.

- 10 CFR 72.210 has been the basis for the implementation of the NUHOMS System at SSES.
- HSM's, DSC's etc. - Utilized Certified Design reconciled for SSES Plant Specific Differences
- Independent Review by a Third Party of the Plant Specific Differences
- Design Change Control

STRATEGY FOR IMPLEMENTATION *(CONTINUED)*

- Summary of Analysis/Calculations Performed to Support Heavy Loads Issue and Structural Analysis
  - Refuel Floor
    - Ensured Crane Certification (single failure)
    - Cask Tip-over Analysis
    - Canister Tip-over analysis
    - Safe Load Path
    - Floor Loading for Staging Equipment
    - Equipment Pit Floor Loading
    - Cask Pit Floor Loading
    - Train Bay Floor Loading

STRATEGY FOR IMPLEMENTATION (CONTINUED)

- Summary of Analysis/Calculations Performed to Support Canister Movement
  - Load Path to Storage Pad
    - Evaluated Roadways and Underground Utilities
    - Developed Instantaneous Dose Calculation
    - Evaluated Inclines to ensure within bounds of Transfer System

STRATEGY FOR IMPLEMENTATION (CONTINUED)

- Summary of Analysis/Calculations Performed to Support Storage Pad Construction
  - Storage Pad (Seismic)
    - Soil Bores to support seismic design
    - Shear Wave Velocity Testing
    - Hydrology Testing (Test bore/pipe in place to monitor ground water)
    - Replaced existing soil with engineered fill compacted and tested every 4-6 inches
    - Utilized state of the art computer analysis for development of concrete pad design
    - Developed Integrated Dose Calculation

STRATEGY FOR IMPLEMENTATION (CONTINUED)

- Construction

Note: SSES ISFSI is being constructed inside the protected area and is encompassed by the existing Security and Emergency Plans

  - Spent Fuel Storage Pad
    - (6) Concrete slabs totaling 262 ft. x 215 ft. x 18 in.
    - Reinforced with wire welded fabric
  - Fencing
    - 8 ft. high chain link fence

STRATEGY FOR IMPLEMENTATION (CONTINUED)

- Construction (Continued)
  - Lighting
    - 500 watt high pressure sodium light located on east and west sides of pad
  - Temperature Monitoring
    - GE FANUC Programmable logic controller
    - Thermocouple for each module
    - Tied to plant computer

STRATEGY FOR IMPLEMENTATION (CONTINUED)

- Fabrication of Components
  - HSM's (9) -Bayshore, Cape Charles VA.
  - DSC's (8) - Ranor, Westminster MA.
  - Transfer Cask- Leased from VECTRA Technologies

STRATEGY FOR IMPLEMENTATION (CONTINUED)

- Operation- Entire evolution will be accomplished by PP&L personnel.
  - Procedures under Development:
    - Fuel Transfer Evolution
    - Unloading HSM and Cutting Open DSC
    - Preparation of HSM's/DSC's
    - Dry Run Procedures
    - Welding Procedures

STRATEGY FOR IMPLEMENTATION (CONTINUED)

- Operation- Entire evolution will be accomplished by PP&L personnel.
  - Training
    - Training course being developed to certify personnel involved with fuel transfer
    - Utilize OJT Davis-Besse Spring 1997
    - One week training in Spring/Summer 1997

QUALITY ASSESSMENT

Appendix OPS-1-K to the SSES Operational Quality Assurance Program, "Independent Spent Fuel Storage Installation, Quality Assurance Plan," Revision 0, dated January 19, 1996.

QUALITY ASSESSMENT
(CONTINUED)

- Integrated Assessment Plan

  - Design Review/Technical Evaluations
  - Procurement/Fabrication Oversight
  - On Site Construction Oversight
  - Operations

QUALITY ASSESSMENT
(CONTINUED)

- Integrated Assessment Plan (continued)
  - Inspections
  - Source Verifications
  - Surveillances
  - Document Reviews
  - Audits

QUALITY ASSESSMENT
(CONTINUED)

- Leadership Initiatives
  - Vectra Project Instruction FS-PPL-96-01
  - NUHOMS Owners' Group QA Subcommittee
  - NUHOMS Owners' Group Audit Team Leader
    - Vectra, San Jose, CA
    - Ranor, Westminster, MA
  - Leased Equipment Control Issues
  - Reactor Water Chemistry Issues
  - Load Test Calibration Issues

QUALITY ASSESSMENT
(CONTINUED)

- Audits
  - Audit 93-134, Vectra Fuel Services Group
  - Audit 96-001, NUHOMS OG Audit of Vectra
  - Audit 96-083, NUHOMS OG Audit of Ranor

QUALITY ASSESSMENT
(CONTINUED)

- Source Verifications (Onsite Transfer Cask)
  - 95-012, Gamma Scan Inspection of Lead Pour*
  - 95-013, Dimensional Inspection Prior to Lead Pour
  - 95-025, Dimensional Inspection - Trunnion Locations
  - 95-026, Trunnion Pull/Load Test
  - 95-027, Final Gamma Scan Inspection of Lead Pour*
  - 95-036, Shell Cylindricity Test and Wall Thickness Inspection*
  - 95-043, Pressure Test and Helium Leak Test*
  - 95-048, Final Documentation Package*

QUALITY ASSESSMENT
(CONTINUED)

- Source Verification (Transfer Cask Hook/Yoke)
  - 95-042, Performance Tests 1,2,& 3
  - 95-044, Performance Test 4
  - 95-047, Final Documentation Package

QUALITY ASSESSMENT
(CONTINUED)

- Ongoing Activities
  - Storage Pad Welded Wire Fabric
    - Manufacturer of Welded Wire Fabric (Structural Reinforcement Products, Survey 96-078)
    - Developed Procurement Plan
    - Conducted Source Verification
  - Storage Pad
    - Independent Concrete Testing (United Inspection Services, Survey 96-054)
    - Full Time PP&L QC Coverage
    - Selected Surveillance Coverage

QUALITY ASSESSMENT
(CONTINUED)

- Planned Activities (Hook Adapter, DSCs, HSMs)
  - Conduct Audit/Survey
  - Determine extent of Vectra Coverage (Project Instruction)
  - Develop Source Verification Plan (Each Component)
  - Develop Source Verification Critical Characteristics (Each Verification)
  - Establish "HOLD" Points
  - Perform Source Verifications

QUALITY ASSESSMENT
(CONTINUED)

- Planned Activities (Subvendors)
  - For Ranor
    - Approve all subvendors
    - To Be Reviewed during Source Verification
  - For Others - Implement Project Instruction FS-PPL-96-01
    - Determine extent of Vectra Coverage
    - Implement Audit/Survey/Source Verification

SUSQUEHANNA STEAM ELECTRIC STATION
SPENT FUEL STORAGE PROJECT
MILESTONE SCHEDULE

K. Kelenski Project Manger Data Date 9/10/96 Run 9/11/96