DRAFT

NUREG/CR-
BNL-NUREG-

RISK-BASED INSPECTION GUIDE FOR THE SUSQUEHANNA STATION HPCI SYSTEM

Prepared by R. Travis, J. Taylor, W. Gunther and W. Shier

Brookhaven National Laboratory

Prepared for
U.S. Nuclear Regulatory Commission

NUREG/CR-
BNL-NUREG-

HIGH PRESSURE COOLANT INJECTION SYSTEM RISK-BASED INSPECTION GUIDE FOR SUSQUEHANNA, UNITS 1 AND 2

Prepared by

R. Travis, J. Taylor, W. Gunther, and W. Shier

Brookhaven National Laboratory
Department of Nuclear Energy
Engineering Technology Division
Upton, NY 11973

Manuscript Completed: April 1992

Prepared for

U.S. Nuclear Regulatory Commission
Office of Nuclear Reactor Regulation
Washington, DC 20555

NRC Program Manager: J. W. Chung

FIN A-3875

ABSTRACT

The High Pressure Coolant Injection (HPCI) system has been examined from a risk perspective. A system Risk-based Inspection Guide (S-RIG) has been developed as an aid to HPCI system inspections at the Susquehanna Steam Electric Station (SSES). Included in this S-RIG is a discussion of the role of HPCI in mitigating accidents and a presentation of PRA-based failure modes which could prevent proper operation of the system.

The S-RIG uses industry operating experience, including plant-specific illustrative examples, to augment the basic PRA failure modes. It is designed to be used as a reference for both routine inspections and the evaluation of the significance of component failures.

CONTENTS

LIST OF TABLES

SUMMARY

This System Risk-based Inspection Guide has been developed as an aid to HPCI system inspections at SSES. The document presents a risk-based discussion of the HPCI role in accident mitigation and provides PRA-based HPCI failure modes (Sections 3 and 4). Most PRA oriented inspection plans end here and require the inspector to rely on his experience and knowledge of plant specific and BWR operating history.

However, the system RIG uses industry operating experience, including illustrative examples, to augment the basic PRA failure modes. The risk-based input and the operating experience have been combined in Table 4-1 to develop a composite BWR HPCI failure ranking. This information can be used to optimize NRC resources by allocating proactive inspection effort based on risk and industry experience. In conjunction, the more important or unusual component faults are reflected in the walkdown checklist contained in Section 5. This, along with an assessment of the operating experience found in Section 6, provides potential areas of NRC oversight both for routine inspections and the "post mortems" conducted after significant failures. The two tables contained in the Appendix to this report, A-1 and A-2, contain detailed information on selected failures which have been experienced. This should be used by the inspector to gain additional insights into a particular failure mode.

A comparison of the SSES and the industry-wide BWR, HPCI failure distributions is presented in Table 4-2. Although the plant specific data are limited, certain SSES components exhibit a proportionally higher than expected contribution to total HPCI failures. These components are candidates for greater inspection activity, and the generic prioritization should be adjusted accordingly.

This generic ranking of HPCI failures has not been revised to reflect the presently available SSES LER data, because the plant specific distribution of HPCI failures is expected to change with time.

As the plant matures, operational experience is assimilated by the utility's staff and reflected in the plant procedures. For example, the incidence of inadvertent HPCI isolations due to surveillance and calibration activities is expected to decrease. Conversely, in time, aging related faults are expected to become a contributor to the SSES HPCI failure distribution. The operating experience section has identified several aging related failures at Arnold, Hatch, Cooper and Brunswick, generally in the pump and turbine electronics.

This report includes all HPCI LERs up to mid 1989. Subsequent LERs can be correlated with the PRA failure categories, used to update the plant specific HPCI failure contribution and compared with the more static HPCI BWR failure distribution. The industry operating experience is developed from a variety of BWR plants and is expected to exhibit less variance with time than a single plant. This information can be trended to predict where additional inspection oversight is warranted as the plant matures.

Recommendations are made throughout this document regarding the inspection activities for the HPCI System at SSES. Some are of a generic nature, but some relate to specific

maintenance, testing or operational activities at SSES. Reference pages where a more detailed discussion can be found are provided.

1. The inspector should examine the surveillance and maintenance programs for the portable diesel generator. In addition, the training program should be periodically reviewed to assure a continued awareness of the temporary connections required under SBO-type conditions. [Page 5]
2. The plant actions to monitor and control the temperature in the HPCI room should be reviewed, and the effect of the loss of room cooling on continued HPCI operation should be evaluated. [Pages 5 and 27]
3. Within the context of the use of HPCI in an ATWS event, the capability of the licensee to perform the necessary bypasses of the system logic should be evaluated periodically. (page 6)
4. The turbine exhaust rupture disks should be installed with a structural backing to prevent cyclic fatigue failures. (generic recommendation-page 18)
5. The inspector should confirm that the licensee acknowledges the complexity of the turbine speed control by having a trained staff to test and repair it. (page 16)
6. Licensee response to NRC Bulletin 88-04 should be reviewed to determine if the design of the minimum flow bypass line is adequate. (generic recommendation-page 22).

ACKNOWLEDGMENTS

The authors wish to express their appreciation to the NRC Program Manager for this project, Dr. J.W. Chung, for his technical direction, and to the NRC Senior Resident Inspector at the SSES, Mr. G. Scott Barber, for his constructive comments and insights.

We express our gratitude to members of the Engineering Technology Division of BNL, Mr. J. Higgins and Mr. R. Hall, for their review of this report.

Finally, we wish to thank Technical Publishing for their help in the preparation of this manuscript.

1. INTRODUCTION

1.1 Purpose

This HPCI System Risk-Based Inspection Guide (S-RIG) has been developed as an aid to NRC inspection activities at the Susquehanna Steam Electric Station (SSES). The High Pressure Coolant Injection (HPCI) system has been examined from a risk perspective. Common BWR accident sequences that involve HPCI are described in Section 3 both to review the system's accident mitigation function and to identify system unavailability combinations that can greatly increase risk exposure. Section 4 describes and prioritizes the PRA-based HPCI failure modes for inspection purposes, and Section 5 translates the risk significant failure modes into a system walkdown guide. The results of a BWR operating experience review are presented in Section 6 along with additional information in related areas such as HPCI support systems, human errors, system interactions and valve failures. A list of references is provided in Section 7.

1.2 Application to Inspections

This system RIG can be used as a reference for both routine inspections and can identify the significance of component failures. The information presented can be used to prioritize day-to-day inspection activities, and the illustrative HPCI failures can suggest multiple inspection perspectives. The S-RIG is also useful for NRC inspection activities in response to system failures. The accident sequence descriptions of Section 3, in conjunction with, the discussion of multiple system unavailability (Section 6) provide some insight into the combination of system outages that can greatly increase risk. Within the context of the HPCI system, the operating experience review provides some of the more unusual failure mechanisms (including corrective actions) which can be useful in the review of licensee response to a system failure. The system RIG can also be used for trending purposes. Table 6-1 provides a summary of the HPCI operating experience, in particular the industry wide distribution of HPCI failure contributions. Those failure modes which account for a larger fraction of the HPCI system failures are candidates for increased inspection activity. Since the plant specific failure distribution is expected to vary over time, a mechanism to update and trend the SSES HPCI experience, in comparison to the more static industry experience, is discussed.

2. HPCI SYSTEM DESCRIPTION

The SSES High Pressure Coolant Injection (HPCI) system is a single train system consisting of turbine-driven injection and booster pumps, piping, valves, controls, and instrumentation. A simplified flow diagram is shown in Figure 2-1. The system is designed to pump a maximum of 5000 gpm into the reactor vessel over a range of reactor pressures from 150 to 1150 psig when automatically activated by low reactor water level or high drywell pressure or manually initiated. Two sources of cooling water are available. Initially, the HPCI pump takes suction from the condensate storage tank (CST) through normally open manual valve F010 and motor-operated valve (MOV) F004. The pump suction automatically transfers to the suppression pool on low CST level or high suppression pool level. This transfer is accomplished by a signal that opens the suppression pool suction valve, F042. Once this valve is fully open, valve-position-limit switch contacts automatically close the CST suction valve. The system is designed to take suction from a source that is less than 170°F. Events that raise the suppression pool temperature above 170°F may require a manual suction transfer back to the CST.

Upon HPCI initiation, the normally closed injection valve, F006, automatically opens, allowing water to be pumped into the reactor vessel through the main feedwater header B. A minimum-flow bypass is provided for pump protection. When the bypass is open, flow is directed to the suppression pool. A full-flow test line is also provided to recirculate water back to the CST. The two isolation valves, F008 and F011, are equipped with interlocks to automatically close the test line (if open) upon generation of an HPCI initiation signal.

The HPCI turbine is driven by reactor steam. The inboard and outboard HPCI isolation valves, F002 and F003, in the steam line to the HPCI turbine are normally open to keep the piping to the turbine at an elevated temperature, thus permitting rapid startup. Upon receiving a signal from the HPCI isolation logic, these valves will close and cannot be reopened until the isolation signal is cleared and the logic is reset. Isolation valve F002 is powered from Division I 480V AC power and controlled by isolation logic system A; F003 is powered from Division II 250V DC power and controlled by isolation logic system B.

Steam is admitted to the HPCI turbine through supply valve F001, turbine stop valve 15612, and turbine control valve 15611, all of which are normally closed and are opened by an HPCI initiation signal. Exhaust steam from the turbine is discharged to the suppression pool, while condensed steam from the steam lines and leakage from the turbine gland seals are routed to a barometric condenser.

The HPCI system is automatically actuated on low reactor water level (level 2) or high drywell pressure. If automatic actuation fails, the system can be manually initiated from the control room.

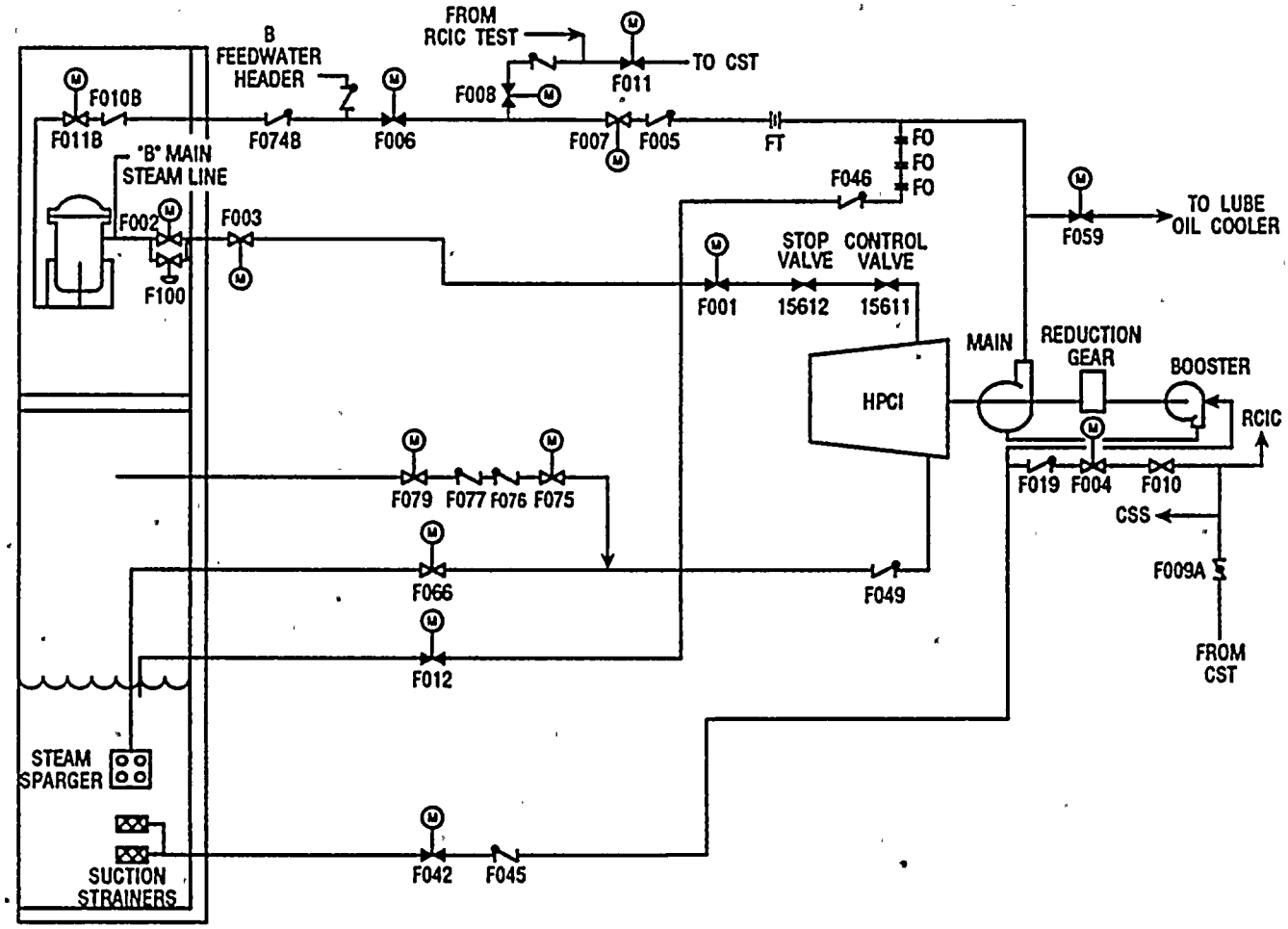
FROM
RCIC TEST
B
FEEDWATER
HEADER
TO CST
F010B
F011B
F008
F011
F074B
F006
F007
F005
FT
FO
FO
FO
F046
"B" MAIN
STEAM LINE
F002
F003
F100
F059
TO LUBE
OIL COOLER
STOP
VALVE
CONTROL
VALVE
F001
15612
15611
MAIN
REDUCTION
GEAR
BOOSTER
HPCI
RCIC
F079
F077
F076
F075
F019
F004
F010
CSS
F009A
F066
F049
F012
FROM
CST
STEAM
SPARGER
SUCTION
STRAINERS
F042
F045

Figure 2-1

3. ACCIDENT SEQUENCE DISCUSSION

The role of the HPCI system in the prevention of reactor core damage is valuable information that can be applied in the normal day-to-day inspection activities. If a plant has its own Probabilistic Risk Assessment (PRA), this information is readily available. Not only are plant specific design and operating nuances considered, but the accident sequences, systems and component risk importances are generally quantified and prioritized.

Since most plants do not currently have PRAs, the application of risk insights is less straightforward. An ongoing PRA-based Team Inspection Methodology for the Risk Applications Branch of NRR has developed eight representative BWR accident sequences based on a review of the available PRAs.[1] Because of design and operational similarities, these representative accidents can be applied to other BWRs for risk based inspections. This information can be used to allocate inspection resources commensurate with risk importance. In addition, if single or multiple systems are degraded or unavailable, this methodology can be used to designate those accident sequences that have become more critical due to the unavailability of a key system(s). This can allow the inspector to focus on the remaining systems/components within a sequence to assure continued availability and minimize plant risk. Five of the eight sequences include the HPCI system, for mitigation or as a potential initiator, and are discussed below.

Loss of High Pressure Injection and Failure to Depressurize

This sequence is initiated by a general transient (such as MSIV closure, loss of feedwater, or loss of DC power), a loss of offsite power, or a small break LOCA. The reactor successfully scrams. The power conversion system, including the main condenser, is unavailable either as a direct result of the initiator or due to subsequent MSIV closure. The high pressure injection (HPI) systems (HPCI/RCIC) fail to inject into the vessel. The major sources of unavailability include one system disabled due to test or maintenance, and system failures such as turbine/pump faults, or pump discharge or steam turbine inlet valves failing to open. The CRD hydraulic (CRDH) system can also be used as a source of high pressure injection at SSES, but the failure of the second CRD pump or unsuccessful flow control station valving prevents sufficient RPV injection. The operator attempts to manually depressurize the reactor pressure vessel (RPV), but a common cause failure of the safety relief valves (SRVs) defeats both manual and automatic depressurization of the reactor vessel. The failure to depressurize the vessel after HPI failure results in core damage due to a lack of vessel makeup.

Station Blackout (SBO) with Intermediate Term Failure of High Pressure Injection

This sequence is initiated by a loss of offsite power (LOOP). The emergency diesel generators (EDGs) are unavailable, primarily due to hardware faults. Maintenance unavailability is a secondary contributor. Support system malfunctions include EDG room or battery/switchgear room HVAC failures, service water pump, or EDG jacket cooler hardware failures. HPCI and RCIC are initially available and provide vessel makeup. To minimize the risk of a stuck open relief valve and to reduce drywell heat loads, the SSES operators reduce RPV pressure early in the sequence to 150–200 psig.[2]

The high pressure injection systems can provide makeup until:

- the station batteries are depleted, or
- the system fails due to environmental conditions i.e., high lube oil temperatures or high turbine exhaust pressure due to the high suppression pool temperature and pressure, or
- the RPV is depressurized and can no longer support HPCI or RCIC operation.
- The HPCI high area temperature logic isolates the system or long term exposure to high temperatures disables the turbine driven pump.

SSES has provided hardware and procedural guidance to address each of these concerns.[3] A 90 kW portable diesel generator has been procured specifically for Station Blackout (SBO) and is stored outside the DG building. It is designed to supply power to the battery chargers (2/unit) to ensure added DC endurance. The operator is instructed to bypass the suppression chamber high water swap over (to maintain a CST suction source and lube oil cooling) and bypass the high turbine exhaust trip (to prevent system isolation on high containment back pressure).[4] The operator is also instructed to connect the fire water supply to the RHR system, as a contingency measure, if the SBO progresses until decay heat cannot support HPCI or RCIC operation. The vessel is then rapidly depressurized and the RHR injection valve is manually opened to permit the diesel driven fire pump to supply vessel makeup.

The reactor building environmental conditions can also impact long term HPCI system operation. The reactor building HVAC and HPCI room cooling is dependent on AC power. Although at SSES the high temperature isolation logic is not operable under SBO conditions, there is an EQ concern (operability of instrumentation and controls) if the HPCI room temperature approaches 150°F. The plant actions to monitor and control high area temperature should be reviewed, including any calculations necessary to establish a time frame for the implementation of these actions.

These measures, if effectively instituted, should be very effective in reducing the risk associated with this sequence. The resident inspector should examine the licensee's surveillance and maintenance programs for the portable diesel generator to assure that they provide a reasonable assurance of availability. In addition, the training program should be periodically reviewed to confirm that the licensee maintains a consistent level of competence regarding portable DG connections, suppression pool swap over/high turbine exhaust bypasses and fire water supply/RHR connections under SBO-type conditions.

In summary, the licensee has instituted significant hardware and procedural modifications that appear to reduce the risk associated with this accident sequence. The portable diesel maintenance/surveillance, procedural guidance and operator training should be periodically reviewed to assure these measures have been, and continue to be, implemented effectively.

Station Blackout with Short Term Failure of High Pressure Injection

This SBO sequence is similar to the previous sequence except the high pressure injection systems fail early. Station battery failures (including common mode) are an important con-

tributor to this sequence; because HPI systems and the EDGs are DC dependent. HPCI unavailability due to turbine/pump failures and maintenance unavailability is also significant. Core damage occurs shortly after the failure of all injection systems.

This sequence is a major contributor to the SSES core melt risk, primarily because the short term failures of HPI do not allow sufficient time to align the fire water supply to the vessel. As such, the SSES HPCI/RCIC availability estimates are a significant influence on the total core damage frequency. The following sections of this report will provide information to assess HPCI system and component availability.

ATWS with Failure of RPV Water Level Control at High Pressure

This sequence is initiated by a transient with initial or subsequent MSIV closure and a failure of the reactor protection system. Attempts to manually scram are not successful, however the Standby Liquid Control System (SLCS) is initiated. By definition, the condenser and the feedwater system are unavailable. The BWR Owner's Group Emergency Procedure Guidelines (EPGs) had recommended RPV water level reductions to control reactor power below 5% and the BWR representative sequence was based on that philosophy. SSES has diverged from the EPG guidance in this area. The SSES approach to ATWS does not include RPV water level reductions to control power; HPCI and RCIC inject at full capacity with an equilibrium water level well above the level 1 ECCS and ADS initiations. A special suppression pool heat capacity temperature limit (HCTL) of 208°F has also been defined for ATWS to avoid depressurizing if possible because of concerns about depressursizing a critical reactor and subsequent low pressure ECCS flooding. Therefore, the BWR representative sequence has been modified slightly to reflect the SSES ATWS philosophy.

This sequence postulates a failure to ensure sufficient RPV makeup at high pressure to prevent core damage. There are several failure modes:

1. HPCI is unavailable due to random failures or because of test/maintenance activities.
2. Failure to bypass the HPCI suction transfer logic results in system failure due to high lube oil temperatures. See SSES procedure ES-252-002.[5]
3. Failure to bypass the high turbine exhaust trip causes a HPCI system isolation on high back pressure assuming the containment remains intact. See SSES procedure ES-252-001.[6]

The inability to maintain RPV water level above the top of the active fuel (TAF) requires manual emergency depressurization, which is expected to result in core damage before the low pressure ECCS can inject.

The continued operability of HPCI during an ATWS event is critical. Within the context of this accident sequence, (i.e., time available for success) the licensee capability to perform the logic bypasses should be evaluated periodically. With regard to HPCI system availability, the remaining sections will discuss system failures and availability evaluation.

Unisolated LOCA Outside Containment

The initiator is a large pressure boundary failure outside containment with a failure to isolate the rupture. The piping failure is postulated in the following systems: main steam (60%) feedwater (12%) high pressure injection (20%) and interfacing LOCA (8%). The percentages indicate the estimated relative core damage contribution of each system.

An interfacing LOCA initiator is defined as the initial pressurization of a low pressure line which results in a pressure boundary failure, compounded by the failure to isolate the failed line. The failure is typically postulated in a low pressure portion of the core spray (CS) system, the LPCI, shutdown cooling and (to a lesser extent), the HPCI or RCIC pump suction or the head spray line of RHR system.

The unisolated LOCA outside containment results in a rapid loss of the reactor coolant system (RCS) inventory, eliminating the suppression pool as a long term source of RPV injection. Piping failures in the reactor building can also result in unfavorable environmental conditions for the ECCS. Unless the unaffected ECCS systems or the condensate system is available, long term RPV injection is suspect and core damage is likely.

There have been several HPCI pump suction overpressurization events, primarily during surveillance testing of the normally closed pump discharge motor-operated valve.[7] This is of particular concern for the configuration with a testable air-operated check valve in series with the normally closed MOV, because of the check valve's history of leakage.

The HPCI interfacing LOCA initiator seems to be less of a problem for the configuration which exists at SSES-two MOVs in series. The normally open MOV (F007) is closed prior to the surveillance of the normally closed MOV (F006). However, some of the concerns of the previous configuration are also valid here. There must be reasonable assurance that the normally closed F006 valve is leak tight during plant operation and, prior to stroke testing, confirmation is necessary to assure F007 is fully closed, and will provide the necessary protection for the upstream piping.

Overall Assessment of HPCI Importance in the Prevention of Core Damage

As previously stated, the high pressure injection function (HPCI/RCIC/CRDH) contribute to mitigation of five of the eight representative BWR accident sequences. The system failures for all eight sequences were prioritized by their contribution to core damage (using a normalized Fussell–Vesely importance measure). The HPI function in aggregate was in the high importance category. Other high risk important systems are Emergency AC Power and RPS. The HPCI system itself is of medium risk importance, because of the multiple systems that can successfully provide vessel makeup at high pressure. For comparison, other systems with a medium risk importance are: Standby Liquid Control, Automatic/Manual Depressurization, Service Water and DC Power.

4. PRA-BASED HPCI FAILURE MODES

PRA models may be used for inspection purposes to prioritize systems, components and human actions from a risk perspective. This enables the inspection effort to be apportioned based on a core damage prevention measure called risk importance. The HPCI failure modes for this system Risk-Based Inspection Guide (System RIG) were developed from a review of BWR plant specific RIGs[8-12] and the PRA-Based Team Inspection Methodology.[1] The component failure modes are presented in Table 4-1, grouped by risk significance. Table 4-2 contains a summary of the operating experience for the industry and for SSES with regard to these risk significant failure modes. Appendices A-1 and A-2 provide more detailed information on the failure events, and are sorted by failure mode.

PRAs are less helpful in the determination of specific failure modes or root causes and do not generally provide detailed inspection guidance. This makes it necessary for an inspector to draw on his experience, plant operating history, Licensee Event Reports (LERs), NRC Bulletins, Information Notices and Generic Letters, INPO documents, vendor information, and similar sources to conduct an inspection of the PRA-prioritized items. To accomplish this task, section 6 presents the results of a detailed review of the HPCI operating experience. The aforementioned sources of HPCI information are correlated by PRA failure mode to provide illustrative inspection examples. This information was also used to develop the system walkdown checklist presented in the next section.

Table 4-1

HPCI PRA-based Failure Summary

COMPONENTS

High Risk Importance[2]

Pump or Turbine Fails to Start or Run
System Unavailable Due to Test or Maintenance Activities
Turbine Steam Inlet Valve (F001) Fails to open
Pump Discharge Valve (F006) Fails to Open

Medium Risk Importance[2]

CST/Suppression Pool Switchover Logic Fails
Suppression Pool Suction Valve (F042) Fails to Open
Normally Open Pump Discharge Valve (F007) Fails Closed or is Plugged
Minimum Flow Valve (F012) Fails to Open, Given Delayed Activation of Pump Discharge Valve, F006.

Lower Risk Importance[2]

CST Suction Line Check Valve (F019) Fails to Open
CST Suction Line Manual Valve (F010) Plugged
Pump Discharge Check Valve (F005) Fails to Open
Suppression Pool Suction Line Check Valve (F045) Fails to open
Normally Open Steam Line Containment Isolation Valve (F002 or 003) Fails Closed
Steam Line Drain Pot Malfunctions
Turbine Exhaust Line Faults, including

•Normally Open Turbine Exhaust Valve (F066) Fails Closed
•Turbine Exhaust Check Valve (F049) Fails to Open

Turbine Exhaust Line Vacuum Breaker (F076,077) Fails to Operate
False High Steam Line Differential Pressure Signal
False High Area Temperature Isolation Signal
False Low Suction Pressure Trip
False High Turbine Exhaust Pressure Signal
System Actuation Logic Fails
Pump Suction Strainer Blockage

NOTES

1. See Section 6 for a discussion of HPCI human errors.

2. The Fussell-Vesely Importance Measure is used to rank the system components. This measure combines the risk significance of a failure or unavailability with the likelihood that the failure/unavailability will occur.

Table 4-2
Susquehanna HPCI System RIG Summary

Failures Description	All BWRS Failure Contribution (%)[1]	Failure Ranking[2]	SSES Number of Failures[3]	SSES Failure Contribution %	Comments
Pump or Turbine Fails to Start or run	40	1	9	47	4
System Unavailable due to T&M Activities	27	2	8	43	4
False High Steamline Differential Pressure Signal	6	3	0	0	5,7
Turbine-Steam Inlet Valve (F001) Fails to Open	5	4	1	5	
Pump Discharge Valve (F006)Fails to Open	5	5	0	0	
Suppression Pool Suction Valve (F042)Fails to Open	3	6	0	0	6,9
Minimum Flow Valve (F012) Fails to Open	3	7	0	0	6,10
System Actuation Logic Fails	3	8	1	5	8
False High Area Temperature Isolation Signal	2	9	0	0	5,7
False Low Suction Pressure Trip	1	10	0	0	5,7
False High Turbine Exhaust Signal	<1	11	0	0	5,7
Normally Open Turbine Exhaust Valve Fails Closed	<1	12	0	0	
CST/Suppression Pool Switchover Logic Fails	<1	13	0	0	9
Systems Interactions Fail HPCI	3	N/A	0	0	11

Table 4-2

Comments

1. Failure contribution is expressed as a percentage of all significant HPCI failures as developed by the Operating Experience Review.
2. Failure ranking is a subjective prioritization based on PRA and operational input, recovery potential, current accident management philosophy and conditional failures, as applicable.
3. SSES significant HPCI failures are based on a review of all available LERs (1982 to mid 1989).
4. Although some caution is warranted due to the limited plant specific data, this failure mode seems to comprise a disproportionate fraction of the SSES HPCI unavailability. This area is a candidate for enhanced inspection attention.
5. Failure importance was upgraded from the PRA-based ranking of Table 4-1.
6. Failure importance was downgraded from the PRA-based ranking of Table 4-1.
7. HPCI isolation and trip logics are significant contributors to unavailability. The system can be isolated by a single malfunction, yet instrument surveillance intervals can be greater than the more reliable actuation logic.
8. Unlike the system trip and isolation logic the actuation logic arrangement (one out-of-two twice) diminishes the importance of a single instrument to reliable system operation. At least two low RPV level or two high drywell pressure sensors must fail. As discussed in Section 6, availability is more dependent on control power.
9. The latest BWROG Emergency Procedure Guidelines deemphasize the suppression pool as an injection source.
10. Conditional on the delayed opening of the pump discharge line valve, F006.
11. Unlike the rest of the failure modes listed herein, "Systems Interactions" is not PRA-based. It was identified as a significant failure mechanism during the operating experience review and is discussed in Section 6.3.

5. HPCI SYSTEM WALKDOWN CHECKLIST BY RISK IMPORTANCE

Table 5-1 presents the HPCI system walkdown checklist for use by the inspector. This information permits inspectors to focus their efforts on components important to system availability and operability. Equipment locations and power sources are provided to assist in the review of this system.

Susquehanna Nuclear Power Plant
HPCI System System Walkdown Checklist

DESCRIPTION	ID	Location	Power Source	Standby Position	Actual Position
A. Components of High Risk Significance			NOTE: All circuit breakers should be closed (ON)		
Turbine Steam Isolation Valve	F001	HPCI Room	MCC D274 (Rx Bldg. 670NE)	CLOSED	_____
Inboard Steam Isolation Valve	F002	Drywell	MCC B237 (AC) (Rx Bldg. 670SW)	OPEN	_____
Outboard Steam Isolation Valve	F003	Rx Bldg. El.683	MCC D274	OPEN	_____
Pump Inboard Discharge Valve	F006	Piping Tunnel	MCC D274	CLOSED	_____
Auxiliary Oil Pump	P213	HPCI Room	MCC D662	OFF	_____
HPCI Inverter		Control Room		ON	_____
B. Components of Medium Risk Significance					
CST Suction Isolation Valve	F004	HPCI Room	MCC D274	OPEN	_____
Pump Outboard Discharge Valve	F007	Rx Bldg. El.670N	MCC D264	OPEN	_____
Pump Minimum Flow Valve	F0012	HPCI Room	MCC D274	CLOSED	_____
Pump Suction from the Suppression Pool	F042	HPCI Room	MCC D274	CLOSED	_____
Turbine Exhaust to Suppression Pool	F066	HPCI Room	MCC D264	OPEN	_____
Full Flow Test Valve to CST	F008	RB 670N	MCC D264	CLOSED	

6. OPERATING EXPERIENCE REVIEW

As previously stated, an operating experience review was conducted to integrate recent industry experience with PRA derived failure modes. Approximately 200 HPCI Licensee Event Reports (LERs) from the period 1985 to mid 1989, were reviewed for applicability to the PRA failure modes for HPCI. Sixty-two LERs did not have a corresponding failure mode. These LERs generally documented successful system challenges, administrative deviations, or seismic/equipment qualification concerns. The remaining 140 LERs documented 159 HPCI faults or degradations. As presented in Table 6-1, these failures have been categorized by PRA failure mode to provide a relative indication of their contribution to all HPCI faults. Each of the thirteen PRA-based failure modes that has corresponding industry failures is discussed below. Selected LERs, identified during the operating experience review, are summarized to illustrate typical failure mechanisms and potential corrective actions. Where applicable, other sources of background information, including NRC Bulletins, Information Notices, Inspection Reports, NUREGs, and AEOD Reports are cited. SSES failure experience over the plant life is also integrated into the discussion of each HPCI failure mode.

The illustrative LERs for the first failure mode, "HPCI Pump or Turbine Fails to Start or Run", are presented in Table A-1; the LERs for the balance of the failure modes are presented

Table 6-1

HPCI Failure Summary

Failure Number	Description	Total Failures*	HPCI Failure Contribution (%)
1	Pump or Turbine Fails to Start or Run	64	40
2	System Unavailable Due to Test or Maintenance Activities	43	27
3	False High Steam Line Differential Pressure Isolation Signal	10	6
4	Turbine Steam Inlet Valve (F001) Fails to Open	8	5
5	Pump Discharge Valve (F006) Fails to Open	8	5
6	Suppression Pool Suction Valve (F042) Fails to Open	6	4
7	Minimum Flow Valve (F012) Fails to Open	5	3
8	System Actuation Logic Fails	4	3
9	False High Area Temperature Isolation Signal	3	2
10	False Low Suction Pressure Trip	2	1
11	False High Turbine Exhaust Signal	1	<1
12	Normally Open Turbine Exhaust Valve Fails Closed	1	<1
13	CST/Suppression Pool Switchover Logic Fails	1	<1
**	Systems Interactions Fail HPCI	3	2
		159	

*Developed during the HPCI Operating Experience Review which examined HPCI LERs from 1985 to mid 1989.
**No PRA system failure mode; operating experience is discussed in Section 6.

in Appendix A-2. The text provides complementary information on the failure distribution within a subsystem.

6.1 HPCI System Failure Modes

HPCI Failure No. 1—Pump or Turbine Fails to Start or Run

The major contributor to HPCI system unavailability, both from a risk and operational viewpoint, is the failure of the turbine driven pump to start or continue running. This failure mode includes many interactive subsystems and components which can make root cause analysis and component repair a complex task. This has been reflected in BWR PRAs by the variance in the subsystems that comprise this failure of the pump or turbine to start or run. This has resulted in some confusion in the application of PRA insights to inspection. For the purposes of this study, this failure has been defined as those components or functions that directly support the operation of the pump or turbine. Table 6-2 presents the subcategories that are included in Failure No. 1 as well as the number of faults each subcategory contributed. The "HPCI Pump or Turbine Fails to Start or Run" basic event accounted for 64 failures or 41% of the HPCI faults in this operating experience review.

A. Turbine Speed Control Faults

The turbine speed is controlled automatically by a control system consisting of a flow controller and an electro-hydraulic turbine governor. The turbine governor system receives the flow controller signal input and converts it into hydraulic-mechanical motion to position the governor (control) valve. The system has a "ramp" generator which upon turbine start, will control the acceleration rate up to a speed corresponding to the flow controller output demand signal. The "ramp" rate is adjustable.

Turbine speed control faults are a major contributor to the pump failure to start. The sixteen failures include:

- six electro-mechanical governor (EGM) control box faults,
- two dropping resistor assembly (resistor box) failures,
- one ramp generator/signal converter box,
- one magnetic speed pickup cable,
- one speed control potentiometer and
- four motor speed changer/electro-mechanical hydraulic (EG-R) actuator failures.

SSES has had two electro-hydraulic control failures, both involving the HPCI ramp generator. One LER (83 106), was attributed to a drift in the gain of the HPCI ramp generator signal converter. The other LER (82 057) was associated with RCIC. A root cause for the RCIC incident was not stated; however both appear to be isolated incidents.

The HPCI turbine speed control is a very complex area that requires specialized attention. The inspector should confirm that the licensee acknowledges the complexity of the turbine speed control by having a trained specialist on staff, a good working relationship with the appropriate vendors, and adequate vendor oversight on proposed modifications or repairs.

B. Lube Oil Supply Faults

This subcategory consists of eleven failures to provide sufficient lubricating oil to various turbine components. As presented in Table A-1, most of the faults are related to the auxiliary oil pump and include two bearing failures and five auxiliary oil pump pressure switch faults. Three other events involving low bearing oil pressure events were attributed to valve mispositions and oil contamination.

There were no SSES failures in this category.

C. Turbine Overspeed and Auto Reset Problems

The mechanical overspeed trip function is set at 125 percent of the rated turbine speed. The displacement of the emergency governor weight lifts a ball tappet which displaces a piston that allows oil to be dumped through a port from the oil operated turbine stop valve. This allows the spring force acting on the piston inside the stop valve oil cylinder to close the stop valve.

The overspeed hydraulic device is capable of automatic reset after a preset time delay.

Table 6-2

HPCI Pump Turbine Fails to Start or Run—Failure Subcategories

Subcategory Description		LER Failures
A. Turbine speed control faults, including		
EGM control box	6	16
Resistor box	2	
Ramp generator/signal converter box	1	
Magnetic speed pickup cable	1	
Speed control potentiometer	1	
Motor speed changer (EG-R actuator remote servo)	5	
B. Lube oil supply faults		11
C. Turbine overspeed and auto reset problems		8
D. Inverter trips or failures		7
E. Turbine stop valve failures		5
F. Turbine exhaust rupture disk failures		5
G. Flow controller failures		5
H. Turbine control valve faults		3
I. Loss of lube oil cooling		2
J. Miscellaneous: Valid high steam flow during testing		2
	Total	64

Overspeed and auto reset problems contributed eight failures to the turbine driven pump failure category. Two events were attributed to failure of the electrical termination to the reset solenoid valves. Two failures were caused by the swelling of the polyurethane tappet in the overspeed trip device tappet assembly head. An additional failure occurred at Dresden 2 in 1987 due to a loose hydraulic control system pressure switch contactor arm. Additional sources of information on turbine overspeed trips are Information Notice 86-14,[13] 86-14 Supplements 1 and 2,[14] and AEOD case Study Report C602.[15]

Susquehanna has not had any reportable occurrences in this area.

D. HPCI Inverter Trips or Failures

The HPCI Inverter is powered from a 125V DC bus and ultimately powers the turbine speed control circuit. There have been seven inverter problems. Three were attributed to internal electronics faults, including a ruptured capacitor at SSES 1 (LER 87 008), and one failure was due to overheating because of an integral cooling fan failure. These Licensee Event Reports did not consider the aging of the electronics as a potential root cause. NRC research has concluded that inverter performance is related to ambient temperature and has developed specific inspection and testing recommendations to monitor inverter performance and detect incipient failures.[16] Two additional problems involved short term unavailability of the inverter. One was a blown fuse; the other was an inverter trip at SSES 1 (LER 88 009) because the high voltage trip setpoint drifted low. At the time, the battery charger, supplying power to the inverter, was operating in the equalize mode; the input voltage to the inverter was 144V DC.

In addition to the two incidents cited above, Susquehanna also experienced an earlier problem (LER 82 049). The inverter tripped during an adjustment of the battery charger output voltage.

SSES, in particular Unit 1, appears to have a disproportionate amount of its HPCI unavailability due to inverter problems.

E. Turbine Stop Valve Failures

The stop valve is located in the steam supply line close to the inlet connection of the turbine. The primary function of the valve is to close quickly and stop the flow of steam to the turbine when so signaled. A secondary function of this hydraulically operated valve is to open slowly to provide a controlled rate of admission of steam to the turbine and its governing valve.

The operating experience review had 5 failures of the turbine stop valve. Two faults were caused by large oil leaks. One failure at Duane Arnold was attributed to the aging of the Buna-N rubber diaphragm in the pilot oil trip solenoid valve.

SSES has had two turbine stop valve failures; a control oil leak and an actuator shaft failure.

F. Turbine Exhaust Rupture Disk Failures

The HPCI turbine has a set of two mechanical rupture diaphragms in series which protect the exhaust piping and turbine casing from overpressure conditions. When the inner disk ruptures, pressure switches cause turbine trip and HPCI isolation signals. Low pressure steam flows past the ruptured diaphragm through a restriction orifice directly into the HPCI room. Rupture of the second disk would vent the turbine exhaust into the HPCI pump room without flow restriction. The nominal rupture pressure is approximately 175 psig.

The five turbine exhaust rupture disk failures that were a part of the operating experience review, all occurred in 1985. One was attributed to cyclic fatigue; two were attributed to water hammer due to carryover from the exhaust line drain pot; and the root cause of two other failures was a manufacturing defect.

There were no SSES rupture disk failures.

G. Flow Controller Failures

The flow controller in conjunction with the electrohydraulic turbine governor, control turbine speed and pump flow. The flow controller senses pump discharge flow and outputs a 4 to 20 milliamp to the turbine governor to maintain a constant pump discharge flow rate over the pressure range of operation.

Flow controller faults accounted for five HPCI failures. The dominant failure (3 LERs) was the failure of the flow controller to function in the automatic mode. Manual control was still available, however.

H. Turbine Control Valve Faults

The three control valve faults are attributable to different root causes. A leaking oil supply line prevented proper operation of the valve. Susquehanna 2 apparently suffered a mechanical failure (LER 86 008). The last incident was a potential failure due to broken lifting beam bolts. AEOD Report T906[17] provides additional information on the contributors to the bolt failures.

I. Loss of Lube Oil Cooling

The loss of lube oil cooling can be caused by faults in the cooling water lines to and from the cooler, cooler leakage or flow blockage. A prolonged loss of lube oil cooling can lead to turbine bearing failure. The lube oil temperature is monitored by a temperature indicating switch with control room annunciation. This category has two failures, both involving the diaphragm of control valve PCV-F035, including one at SSES 1. Susquehanna 1 also had an earlier failure of PCV-F035 (LER 83 140). The valve would not cycle because the motor overload heaters were burned open and the motor was damaged. Apparently the torque switch did not actuate due to conditions in the spring pack.

J. Miscellaneous—Valid High Steam Flow During Testing

Another potential system failure involves the practice of running the auxiliary oil pump to lubricate the turbine bearings or to clear a system ground. Monticello used this practice to attempt to clear a ground in the electro-hydraulic governor. When the fault did not clear, a system test was initiated to confirm HPCI operability. When the operator opened the turbine steam admission valve to simulate a cold quick start, the system isolated on high steam flow. The operation of the auxiliary oil pump caused the hydraulically operated turbine stop valve to move from its full closed to its full open position. When the stop valve leaves the fully closed position it initiates a ramp generator that provides the flow control signal to the turbine steam admission valve, allowing it to move to the open position. Since the auxiliary oil pump had been running for some time the ramp generator had timed out and a maximum steam flow demand signal was sent to the control valve. This prevented the turbine steam admission valve from restricting steam flow as it normally would during a turbine start, resulting in high steam flow and a valid system isolation.

Plant procedures address running the auxiliary pump periodically to keep the turbine bearings lubricated. When the auxiliary oil pump is running, the high pressure coolant injection system will isolate if an automatic initiation signal is received at any time after the ramp generator has timed out, which occurs after approximately 10–15 seconds. The plant has taken the following corrective actions to address the problem:

- A modification has been approved that will eliminate ramp generator initiation while the auxiliary oil pump is running unless a valid initiation signal occurs.
- The high pressure coolant injection system operating procedures have been revised to include cautions addressing system inoperability when the auxiliary oil pump is running.
- The operating procedures that verify system operability have been revised to include precautions about system status before and during the test. The control system ramp generator function during the opening of the steam admission valve is described in these procedures.

In summary, this is a significant concern because a common plant practice has the potential to disable the HPCI system. SSES procedure OP-152-001, step 3.4.4,[18] provides the appropriate caution to remind the operator of this interaction.

HPCI Failure No. 2—System Unavailable Due to Test or Maintenance Activities

A probabilistic risk assessment develops estimates of system unavailability generally using a fault tree. The fault tree is a diagrammatic representation of the known contributors to system unavailability. In addition to component failures, the system may not be functional due to testing or maintenance (T&M) activities. In a single train system, like HPCI, test and maintenance activities on one component tend to disable the entire sytem. It is important to keep the HPCI T&M contribution as low as possible because it is so important to system unavailability.

The root sources of excessive HPCI T&M unavailability were examined as part of this operating experience review. Forty-three examples of test or maintenance errors (27% of all HPCI failures) were divided into three contributors to T&M unavailability. Inadequate maintenance or inadequate post maintenance testing accounted for 22 HPCI failures. The problems included valve packing leaks, misadjusted torque switch settings, miscalibrations of a steam line differential pressure instrument and an EGR actuator, improper connection of a gland exhauster drain line to the tube (high pressure) side of the gland seal condenser, system adjustment without a retest, and a rag left in the turbine sump which disabled the shaft driven oil pump.

Only two of these errors were discovered in an HPCI operational test at low pressure. The bulk of these events occurred during maintenance or surveillance testing at power.

A second T&M category, consisting of 4 events, is attributable to human error that inadvertently or incorrectly disables the HPCI system. Pertinent examples include the disabling of the wrong HPCI system at a two unit site, mistakenly disabling the auxiliary oil pump due to a smoke odor in the HPCI room, and valving errors which later caused a low pump suction trip or inadequate lube oil pressure.

The final category, "system inadvertently disabled during testing," consists of thirteen personnel errors that temporarily disabled the HPCI system. These incidents include steam line containment isolation valve closure due to errors during testing of the isolation logic, a valve motor failure due to overheating caused by excessive stroking during a surveillance test, and an inverter trip caused by personnel error which resulted in a high voltage condition affecting both Channel C battery chargers. Unlike the first two categories, the majority of these failures have a high probability of recovery.

Susquehanna 1 and 2 have submitted 8 LERs related to test and maintenance practices. The majority of these LERs documented short term inadvertant HPCI isolations due to testing errors. The two significant T&M problems concern HPCI inoperability due to booster/main pump misalignment (LER 84 022) and the disabling of Unit 1 HPCI trip logic instead of the Unit 2 HPCI (LER 88 022).

In summary, the T&M component of system unavailability must be continuously monitored by the inspector to assure it is as low as possible. The licensee should be administratively limiting the time that the HPCI system is in test or maintenance during operation. System restoration should be vigorously pursued; HPCI should not be down for days, if it can reasonably be repaired in hours. If feasible, portions of the system should be tested during outages. In addition, HPCI unavailability can also be minimized by adequate root cause analysis and effective corrective action to avoid multiple system outages to address the same failure.

HPCI Failure No. 3—False High Steam Line Differential Pressure Isolation Signal

The HPCI system is constantly monitored for leakage by sensing steam flow rate, steam pressure, area temperatures adjacent to HPCI steam lines and equipment, and high HPCI turbine exhaust pressure..

The steam flow rate is monitored by two differential pressure switches located across two different elbows in the steam piping inside the primary containment. The flow measurement is derived by measuring differential pressure across the inside and outside radius of each elbow. If a leak is detected, the system isolates the HPCI steam line and actuates a control room annunciator.

This failure category has 10 LERs which constitute 6% of the total HPCI failures. There are no SSES LERs in this category. Additional information can be found in Information Notice 82-16.[19]

HPCI Failure No. 4—Turbine Steam Inlet Valve (F001) Fails to Open

Motor operated valve F001 is a normally closed, DC powered gate valve. This valve opens on an automatic or manual initiation signal, provided the turbine exhaust valve (F066) is open, to admit reactor steam up to the turbine stop valve.

There have been 8 failures of this valve to open on demand comprising 5% of all HPCI failures, including:

- two cases of mechanical/thermal binding at Brunswick 1
- one stuck valve at Cooper attributed to the restelliting of the disk
- one valve motor failure at Fitzpatrick due to insufficient stem lubrication.

Other failures were attributed to loose torque switch adjustment screws, potentially insufficient opening torque concerns, and sticking MCC relays.

SSES did not have any reportable failures of valve F001 to open. However, there is one instance (LER 87 007) of a failure to close during testing, due to relay contacts that were stuck closed.

HPCI Failure No. 5—Pump Discharge Valve (F006) Fails to Open

Motor operated valve F006 is a normally closed DC powered gate valve that is automatically opened upon system initiation. The failure of this valve to open disables HPCI injection into the reactor vessel.

There have been 8 pump discharge failures documented in the operating experience review. This failure mode accounts for 5% of all system failures.

One valve failure was due to a set of mispositioned auxiliary contacts in the valve motor starting time delay relay. Other failures are more generic, including two failed motors, a ground of the DC control voltage at the torque switch, and inadequate torque concerns due to the use of starting resistors in the valve motor circuitry.

The Susquehanna Units have not had any reportable failures of the HPCI pump discharge valve.

HPCI Failure No. 6—Suppression Pool Suction Line Valve (F042) Fails to Open

The suppression pool HPCI pump suction valve (F042) is a normally closed, DC powered valve. The HPCI system is initially aligned to the condensate storage tank. The suppression pool suction valve is opened and the CST suction valve is closed on a CST low water level or a high suppression pool level signal. The importance of this HPCI failure mode has been diminished by the current emergency procedure guidelines which emphasize the continued use of outside injection sources. This requires operator action to bypass the HPCI suppression pool switchover logic to prevent the opening of F042. This is especially true for the decay heat removal (non ATWS) sequence where it is likely that the CST makeup can be maintained.

There have been six failures of the suppression pool suction valve to open, representing 4% of all HPCI failures. All occurred during system surveillances. The valve failures are generic in nature and include two motor failures due to insulation degradation, one misadjusted torque switch, a limit switch failure and a valve disk separation.

There have not been any reportable HPCI suppression pool suction valve failures at SSES.

HPCI Failure No. 7—Minimum Flow Valve (F012) Fails to Open

The minimum flow bypass line is provided for pump protection. The bypass valve, F012, automatically opens on a low flow signal of <300 gpm (from E41-N006) when the pump discharge pressure is greater than 125 psig (from E41-N027). When the bypass is open, flow is directed to the suppression pool. The valve automatically closes on a high flow signal. During an actual system demand, the failure of the minimum flow valve to open is important only if the opening of the pump discharge valve (F006) is significantly delayed. In general, this combination of events is not probabilistically significant. With regard to system operation and testing in the minimum flow mode, the licensee response to NRC Bulletin 88-04[20] should be reviewed to determine if the design of the minimum flow bypass line is adequate. Unless there is a design concern or a recurring problem with either component, inspection effort should be devoted elsewhere.

SSES did not have any reportable problems with the minimum flow valve F012.

HPCI Failure No. 8—System Actuation Logic Fails

Startup and operation of the HPCI system is automatically initiated upon detection of either low water level (−38 inches, decreasing) in the reactor vessel or high drywell pressure (approximately 2 psig, increasing). The HPCI system can also be manually initiated by arming and then depressing the manual initiation switch in the control room.

There were 4 LERs associated with this failure mode. The LERs illustrate that the failure of the HPCI actuation logic is more likely due to common causes such as the loss of power. Unlike the HPCI trip logic, the redundancy (one out of two twice) and the diversity (low vessel level/high drywell pressure) of the actuation logic make it less susceptible to individual sensor failures.

An incident occurred at SSES 2 (LER 84 012) where two control power fuses were removed during a core spray logic modification. Multiple safety related systems which utilize core spray relay contacts for high drywell pressure and low RPV level initiation signals were degraded or disabled, including the HPCI system.

HPCI Failure No. 9—False High Area Temperature Isolation Signal

The HPCI system is constantly monitored for leakage by sensing steam flow rate, steam pressure, and area temperatures adjacent to the steam line and equipment. If a leak is detected, the system is automatically isolated and alarmed in the control room. The SSES ambient temperature monitoring system includes:

- Equipment room ventilating air inlet and outlet high differential temperature
- Emergency air cooler inlet high temperature
- Pipe routing area ventilating air inlet and outlet high differential temperature
- Pipe routing area high temperature

HPCI isolation will occur when any of the temperature switches trip. This category accounted for three HPCI failures (2% of all failures). There were no reportable HPCI failures related to the high area temperature detection system at SSES. The RCIC system at SSES2 had one failure of temperature indicating switch E51-N600B (LER 85 014).

HPCI Failure No. 10—False Low Suction Pressure Trips

The purpose of the low pump suction pressure trip is to prevent damage to the HPCI pumps due to loss of suction. Pressure switch E41-N010 actuates to cause the turbine stop valve to close.

There have been two turbine trips attributed to false low suction pressure signals. One occurred at Cooper because the low suction pressure switch isolation valve was inadvertently closed, and the second instance occurred at Brunswick 2 when HPCI isolated immediately after an initiation signal. SSES has not had any HPCI (or RCIC) system isolations due to false low suction pressure trips.

HPCI Failure No. 11—False High Turbine Exhaust Pressure Signal

The high turbine exhaust pressure signal is one of several protective turbine trip circuits that close the turbine stop valve and isolate the HPCI system. The high turbine exhaust pressure signal is generated by pressure switches E41-N017 A or B, and is indicative of a turbine or a control system malfunction.

Susquehanna 1 had one instance of a false high turbine exhaust pressure signal which could not be reset, thereby disabling the RCIC system (LER 83 102). The fault was attributed to a microswitch which required adjustment because it was physically impeded from resetting.

HPCI Failure No. 12—Normally Open Turbine Exhaust Valve Fails Closed

The failure of any of the turbine exhaust valves to open results in a turbine trip due to a valid high turbine exhaust signal. One facility had a failure of the turbine exhaust line swing check valve. The valve internals were found wedged in the downstream MOV (F066) and had the potential to trip the turbine due to high exhaust pressure. The failure was attributed to the forceful cycling of the swing check discs under low flow conditions. References 21 and 22 can provide additional background information.

HPCI Failure No. 13—Condensate Storage Tank/Suppression Pool Switchover Logic Fails

In the standby mode, the HPCI pump suction is normally aligned to the condensate storage tank (CST). Upon a low CST level signal or a high suppression pool level signal (via level switch E41-N015 A or B), the suppression pool suction valve (F042) automatically opens with subsequent closure of the CST suction valve (F004). System operation continues with the HPCI booster pump suction from the suppression pool.

The operating experience review found one example of a degraded HPCI pump suction switchover logic. One of the suppression pool level switches was out of calibration due to a slight amount of foreign material that was deposited on the float.

This PRA-based HPCI failure mode has become less important due to changes in the BWR Emergency Procedure which generally advocate the continued use of water sources that are external to the containment. This avoids potential ECCS degradation due to high suppression pool temperature (HPCI high lube oil temperature) while simultaneously increasing suppression pool mass. The end result is that an HPCI pump suction transfer to the suppression pool is no longer that desireable and the operator, especially in decay heat accident sequences, is likely to bypass the switchover logic to maintain the CST suction source, or to realign if a switchover to the pool has occurred. Therefore, the inspection focus should be on the continued viability of the CST as an injection source during an accident sequence. For example, does the CST have sufficient capacity to satisfy long term injection requirements or are procedures and training in place to provide makeup?

There are no SSES LERs related to CST/suppression pool switchover logic failures.

The Operating Experience Review did not identify any HPCI failures for the following PRA-based failure modes:

- Normally Open Pump Discharge Valve (F007) Fails Closed or is Plugged
- Pump Discharge Check Valve (F005) Fails to Open
- CST Suction Line Check Valve (F019) Fails to Open
- CST Suction Line Manual Valve (F010) Plugged
- Suppression Pool Suction Line Check Valve (F045) Fails to Open
- Normally Open Steam Line Containment Isolation Valve (F002 or 003) Fails Closed

- Steam Line Drain Pot Malfunctions
- Turbine Exhaust Line Vacuum Breaker (F076, 077) Fails to Operate
- Suppression Pool Suction Strainer Blockage

The PRA-based prioritization of HPCI failures correlates well with the actual industry failure experience. With the exception of the first failure mode ~~that follow~~ (MOV F007), all of the faults that follow have been designated as "low importance" in the PRA-based ranking of Section 4.

6.2 Contribution of Human Error to System Unavailibility

The potential for human error exists for activities involving maintenance, calibration, surveillance and, of course, operation. Probabilistic Risk Assessments typically emphasize operator error both in fault trees (system failure diagrams) and in the event trees that describe accident sequences. As such, these failures are usually gross actions that can fail a complete system. Typical PRA-based HPCI human errors are:

1. Failure to manually start the high pressure injection system if automatic actuation fails.
2. Failure of the operator to transfer pump suction from the CST to the suppression pool after a pump trip on low suction pressure due to CST unavailability.
3. Failure to drain HPCI steam line drain pot, given drain valve failures.
4. Failure to provide makeup to the CST during an ATWS event.
5. Failure to transfer pump suction from the suppression pool to the CST during an event with a high suppression pool temperature. There are two cases when this must be performed, one during an ATWS event and one during a non-ATWS event with the failure of suppression pool cooling.
6. Failure to override the HPCI high-temperature isolation logic (for station blackout sequences).
7. Operator recovery from initial failure of HPCI.
8. Miscalibration of HPCI sensor(s) disables system actuation, high RPV level isolation or results in false isolation signals.
9. Failure to reset the HPCI system for operation after testing or maintenance.

With the exception of the last two entries, these human errors are either: a) conditional; that is, they must be considered within the context of an HPCI failure or isolation errors 1, 2 and 3 or b) event specific (items 4 through 7). These requirements make direct observation unlikely. The potential for these human errors can be evaluated indirectly by a review of the licensee procedures and observation of operator performance at a simulator.

The last two human errors can occur during normal operation and are therefore more inspectable. Resident Inspectors routinely examine surveillance, calibration and maintenance practices and procedures and perform ECCS control room and plant lineup verifications. HPCI operability is confirmed by checking the steam supply and exhaust lineup, pump suction and discharge lineups and the control function settings (hand/auto station in automatic). In addition, the SSES bypass indication panel also provides information on ECCS availability.

There is a second source of human error that is not readily discernible in most risk assessments because it is not considered as a separate failure. It is the human contribution to component unavailability. The component failure estimates are developed from plant specific experience, if enough data exists, or from other, more generic, data sources. In either case, the unavailability estimate of a standby component is based on the number of failures per total demands. This estimate inherently includes all failures caused by human error. Based on the operating experience review, it is estimated that more than 50% of the HPCI failures have a human error contribution.

As previously indicated, the examination of licensee practices and procedures, as well as the application of industry experience, can help reduce that portion of the HPCI unavailability that is due to human error. In the reactive mode, a thorough root cause analysis and suitable corrective measures can prevent similar occurrences in the future.

6.3 Support Systems Required for HPCI System Operation

The high pressure coolant injection system is dependent on other systems (called support systems) for successful operation. These systems are:

DC Power	—	For system control (125 V DC) and valve movement (250 V DC).
HPCI Actuation	—	RPV level and primary containment pressure instrumentation for system initiation and shutdown.
Room Cooling	—	For HPCI pump room cooling to support long term operations. This function requires service water (for cooling) and AC power for the fan motor.

During the HPCI Operational Experience Review the support system influence on HPCI availability was apparent. The loss or degradation of the DC battery or bus that powers HPCI has a straightforward effect. Besides the battery charger problems or fuse openings, the more unusual DC system problems included a battery degradation due to corrosion of the plates. The suspected cause was a galvanic reaction due to plate weld metal impurities. Another concern is insufficient voltage at the load during transients which could trip the station inverters or fail MOVs (Browns Ferry 1, Brunswick 1 & 2 and Nine Mile Point 1). This would be of particular concern during a loss of offsite power or a station blackout event.

The effect of the loss of room cooling on continued HPCI operation is not as clear. The system is typically required to support long term HPCI operation. Besides the random fail-

ures which can occur at any time, there is one sequence specific effect that should be examined. During station blackout, the room cooling is lost when continued HPCI operation is critical. The licensee actions to preserve HPCI operation should be examined. For example, some plants will open pump room doors to promote convective cooling, but that does not necessarily assure continued HPCI operation. The licensee should have pump room and steam line temperature calculations or have other proceduralized provisions (bypass high temperature isolation) to assure long term HPCI operability.

The RPV level or high drywell pressure instrumentation is required for multiple ECCS systems including HPCI. The operating experience review did not have any pertinent examples of failures of the ECCS actuation logic which directly affected HPCI.

In summary, support system problems can impact HPCI operation sometimes in a less than straightforward manner. In the context of specific accident sequences, these support systems may be more prone to failure. The inspector should verify licensee awareness of these interaction relations and confirm that compensating measures are adequate.

System Interactions

Unlike support system failures, such as room cooling or DC power, systems interactions refer to unrelated system failures that can disable HPCI. Although there is no PRA category, the operating experience review revealed three examples of system interactions. Fire protection system malfunctions that disabled HPCI because of the migration or spraying of water on electrical equipment or controls.

Simultaneous Unavailability of Multiple Systems

Multiple system unavailability is of concern because of the increased risk associated with continued operation. Although technical specification 3.0.3 tends to limit the risk exposure somewhat, the licensee should avoid planned multiple system outages, if possible.

Within the context of the accident sequences discussed previously (Section 3), certain combinations of system unavailability result in a much greater risk of core damage. For example, the HPCI operating experience review had nine LERs that documented simultaneous HPCI and RCIC unavailability. During this period, the probability of core damage is greatly increased for accident sequences that require HPCI and RCIC for mitigation. This would include all the sequences described in the Accident Sequence Description except "Unisolated LOCA Outside Containment." The unavailability of HPCI and an emergency diesel generator would have similar impact on plant risk. Additionally, the simultaneous unavailability of HPCI and ADS (one LER, due to logic testing) somewhat impacts Sequence 1, "Loss of High Pressure Injection and Failure to Depressurize."

Although some of these LER examples of multiple system unavailability were due to random failures, the majority involve licensee decisions to disable a system for surveillance when another critical system is not operable. Unless absolutely necessary, these configurations should be avoided, as frequent entry into technical specification 3.0.3 greatly increases the risk of core damage.

HPCI Valve Failures

Many of the HPCI valve failures, whether the turbine steam admission, the pump discharge, the minimum flow valve, etc. can be considered to be generic, i.e., not related to a specific application.

LOCA Outside Containment

Unlike the HPCI failures described earlier which are related to describe the unavailability of the system for core damage mitigation, four events have occurred where HPCI is a potential initiator of a LOCA outside containment. These LERs consist of degradations of the steam line isolation function and pump suction line overpressurizations. The two steam line isolation problems both occurred at Dresden 2. One was a steam line differential pressure transmitter with a non conservative setting. The other was a failure of the inboard containment isolation valve to close.

The remaining two incidents were inadvertent pressurizations of the HPCI low pressure piping. A pump suction overpressurization occurred at Fermi (LER 87 030) during a system test. A pressure surge of ~800 psig occurred in the HPCI pump suction piping after a turbine trip. The event was attributed to the slow closure of pump discharge lift check valve (F005). The licensee replaced the valve with a swing check, which is expected to close faster.

More recently, (October 31, 1989) Dresden 2 declared HPCI inoperable due to elevated piping temperatures in the pump discharge line. The 260°F temperature was caused by feedwater back leakage through the closed injection valves. Discharge piping supports were damaged, attributable to waterhammer caused by steam void collapse upon system initiation. In addition to the potential for piping damage, steam binding of the pumps is also a consideration. Information Notice 89-36[23] provides additional information on elevated ECCS piping temperature.

In general, the HPCI LOCA outside containment initiator is a very small contributor to total core damage. The diverse steam line break detection logic and the downstream feedwater check valve reduce the potential for an unisolated LOCA outside containment. The examples presented above are potential areas of inspection to assure that plant design or operation does not increase the potential for this initiator.

7. REFERENCES

1. Brookhaven National Laboratory (BNL) Technical Letter Report, TLR-A-3874-T6a, "Identification of Risk Important Systems Components and Human Actions for BWRs," August 1989.
2. SSES Procedure E0-100-030, "Unit 1 Response to Station Blackout," Revision 5, 2/8/88.
3. PP&L Nuclear Plant Engineering Technical Report No. NPE-89-004, "Coping Assessment for the Susquehanna Steam Electric Station During a Station Blackout," May, 1989.
4. SSES Procedure E0-100-032, "HPCI System Operating Guidelines During Station Blackout," Revision 1, 6/12/86.
5. SSES Procedure ES-252-002, "HPCI Suction Auto Transfer Bypass", Revision 0, 8/16/85.
6. SSES Procedure ES-252-001, "HPCI Turbine Isolation, Trip and Initiation Bypass", Revision 2, 12/31/87.
7. NRC Case Study Report, AEOD/C502, "Overpressurization of Emergency Core Cooling Systems in Boiling Water Reactors," Peter Lam, September, 1985.
8. Brookhaven National Laboratory (BNL) Technical Report A-3453-87-5 "Grand Gulf Nuclear Station Unit 1, PRA-Based System Inspection Plans," J. Usher, et al., September, 1987.
9. BNL Technical Report A-3453-87-2, "Limerick Generating Station, Unit 1, PRA-Based System Inspection Plans," A. Fresco, et al., May, 1987.
10. BNL Technical Report A-3453-87-3, "Shoreham Nuclear Power Station, PRA-Based System Inspection Plans," A. Fresco, et al., May, 1987.
11. BNL Technical Report A-3864-2, "Peach Bottom Atomic Power Station, Unit 2, PRA-Based System Inspection Plan," J. Usher, et al., April, 1988.
12. BNL Technical Report A-3872-T4, "Brunswick Steam Electric Plant, Unit 2, Risk-Based Inspection Guide," A. Fresco, et al., November, 1989.
13. NRC Information Notice 86-14, "PWR Auxiliary Feedwater Pump Turbine Control Problems", March 10, 1986.
14. NRC Information Notice 86-14 Supplement 1, "Overspeed Trips of AFW, HPCI and RCIC Turbines", December 17, 1986; Supplement 2, August 26, 1991.
15. NRC AEOD Case Study Report C602, "Operational Experience Involving Turbine Overspeed Trips," August, 1986.
16. NUREG/CR 5051, "Detecting and Mitigating Battery Charger and Inverter Aging," W.E. Gunther, et al., August, 1988.
17. NRC AEOD Technical Review Report T906, "Broken Lifting Beam Bolts in HPCI Terry Turbine," April 18, 1989.

18. SSES Procedure OP-152-001 "HPCI System", Revision 12, 12/4/89.

19. NRC Information Notice 82-16, "HPCI/RCIC High Steam Flow Setpoints," May 28, 1982.

20. NRC Bulletin 88-04, "Potential Safety Related Pump Loss," May 5, 1988.

21. NRC AEOD Report E402, "Water Hammer in BWR High Pressure Coolant Injection Systems," January, 1984.

22. NRC Information Notice 82-26, "RCIC and HPCI Turbine Exhaust Check Valve Failures," July 22, 1982.

23. NRC Information Notice 89-36, "Excessive Temperatures in Emergency Core Cooling System Piping Located Outside Containment", April 4, 1989.

Appendix A-1

Summary of Industry Survey of HPCI Operating Experience

HPCI PUMP OR TURBINE FAILS TO START OR RUN

Table A-1 HPCI Pump or Turbine Fails to Start - Industry Survey Results

Failure Desc.	Root Cause	Corrective Measures	Comments	Inspection Guidance
TURBINE SPEED CONTROL FAULTS EGM control box malfunction	Two similar failures attributed to aging effects due to long term energization and possibly elevated ambient temperatures. An EGM printed circuit board failed and caused a false high steam flow signal. The second failure involved the electronics in the control box chassis.	EGM printed circuit boards will be replaced at eight year intervals. Additional HPCI pump room cooling added.	Each of these EGM control box failures occurred at older plants and appear to be aging related.	
	EGM control box had a ground.	Two printed circuit boards replaced.		
	Miscalibration of wall voltage settings.	Recalibration of voltage settings.		
	Failed transistor in the EGM control box.	Box replaced. Surveillance procedures being expanded to verify proper functioning of the output speed circuit.		
Motor speed changer/EG-R actuator malfunctions.	HPCIO failed auto initiation surveillance because the electrical connections between governor control and governor valve electrohydraulic servo were in error.	Error was not detected during a previous test at 160 psig. Procedures revised to functionally test the governor control system during the low pressure surveillance testing.		
	Capacitor failure in motor gear unit.	Replaced capacitor	Failure may have been caused by excessive HPCI room temperature.	Ambient temperatures in equipment areas should be verified with specifications.
	Improper gaping and foreign accumulation on contacts.	Component replaced or serviced.		
	EG-R actuator grounded at pin connection due to the accumulation of corrosion products. There were three occurrences of this event that have been attributed to a design change in the actuator pin connections.	Corrosion products removed.		

Table A-1 HPCI Pump or Turbine Fails to Start - Industry Survey Results

Failure Desc.	Root Cause	Corrective Measures	Comments	Inspection Guidance
Dropping resistor assembly problems.	Resistor box design deficiency-special test showed output voltage insufficient when input voltage at design minimum.	Resistor box modified to ensure EGM control box will receive required voltage under worst case conditions.		
	Resistor Failure	Resistor component replaced		
Ramp generator/signal converter box.	Slow HPCI response time attributed incorrect turbine loop gain and ramp time settings.	Gain and time settings reset.	Settings had not been modified based on power ascension test program.	
Magnetic speed pickup cable.	Cable damaged during HPCI maintenance preventing speed feedback to the speed controller.	Cable repaired.		
Speed control potentiometer.	Loose control room panel terminations.	Repaired panel terminations.		
<u>LUBE OIL SUPPLY FAULTS</u> Auxiliary oil pump pressure switch fails.	Microswitch within pressure switch fails.	Microswitch replaced.	2 additional failures due to miscalibration, and one attributed to a piece of teflon tape that blocked sensing orifice of switch.	
	Loose hydraulic control system pressure switch contacting arm.	Component adjusted.		
Auxiliary oil pump failure.	Pump bearing failure degraded pump performance/lower discharge pressure, bearing had been recently replaced-potential human error.	Pump replaced.	Similar event-pump motor bearing failure was possibly due to daily use to supply oil to turbine stop valve.	
Additional low bearing oil pressure occurrences.	Human error. All control valves mispositioned.	Valves correctly positioned, handles removed. Surveillance revised to check oil pressure during turbine test.	Two similar events have occurred at other plants.	
Lube oil contamination.	Paraffin in lube oil coated piston caused binding of hydraulic trip relay.	Piston cleaned.		The process of periodically sampling lube oil should be verified.

Table A-1 HPCI Pump or Turbine Fails to Start - Industry Survey Results

Failure Desc.	Root Cause	Corrective Measures	Comments	Inspection Guidance
TURBINE OVERSPEED AND AUTO RESET PROBLEMS				
Electrical termination failures	Loose electrical termination on solenoid valve coil disabled the remote reset function. Failure attributed to normal HPCI vibration.	Wiring to the solenoids will be restrained to reduce strain on the terminations.	The corrective action for a similar earlier event apparently did not address the root cause of the failure.	
Overspeed trip device tapped binding.	Overspeed trip device tappet assembly head was binding in valve body. Polyurethane tappet, previously machined per GE guidance, had experienced additional growth.	Tappet remachined.	Similar occurrence at another plant.	
	Loose hydraulic control system pressure switch contactor arm.	Repaired contactor arm.	None.	
Drain port blocked.	Erratic stop valve operation. Blocked drain port in overspeed trip and auto reset piston assembly caused trip mechanism to cycle between tripped and normal positions.	Drain port cleared.	Additional information on turbine overspeed trips is provided in NRC Information Notice 86-14 and 86-14, Supp. 1.	
INVERTER TRIPS OR FAILURES				
	Inverter tripped and could not be reset due to a failed diode.	Replaced inverter.	See Ref. 9 for effects of inverter aging and preventative measures.	
	Inverter failed due to the failure of an internal capacitor.	Replaced inverter.	A similar event involving a ruptured capacitor occurred at another plant.	
Internal electronic faults	Inverter overheating due to a failed integral cooling fan.	Repaired or replaced cooling fan.		
	Inverter failure due to blown fuse.	Replaced fuse.		

Table A-1 HPCI Pump or Turbine Fails to Start - Industry Survey Results

Failure Desc.	Root Cause	Corrective Measures	Comments	Inspection Guidance
	Inverter trip due to high voltage setpoint drift.	Equalize voltage was reduced allowing inverter to reset.		
TURBINE STOP VALVE FAILURES				
Control oil leaks.	Oil leak developed at pilot valve assembly/hydraulic cylinder flange bolts were loose.	Flange bolts torqued.	Similar event at another plant.	
Pilot oil trip solenoid valve.	Valve stuck open due to disintegration of diaphragm that caused valve plunger to stick above the seat.	Valve's expendable parts now scheduled for replacement at every third refueling outage.		
	Valve would not open due to excessive leakage of piston rings in hydraulic cylinder actuator.	Piston rings were fabricated from resin impregnated leather. Vendor recommended replacement every five years. Potential aging concern.	Further discussion in IE Circular 80-07[10].	
Mechanical valve failures.	Valve and actuator stems separated at split coupling. Balance chamber adjustment drift believed to have caused increased momentum and disk overtravel.	Balance chamber adjustment was performed in 1985 per GE SIL 352. Adjustment will be checked quarterly for a minimum of 3 quarters.	Similar failure occurred involving a loose valve position sensor bracket that caught on actuator housing when the valve opened. The valve failed in the open position.	Overstress and ultimate fracture will usually occur at the undercut on the coupling threads due to reducing cross section. Incipient stem failure may be indicated by circumferential cracks in threaded stem area.
TURBINE EXHAUST RUPTURE DISK				
Cyclic fatigue.	Inner rupture disk failed due to cyclic fatigue (alternating pressure and vacuum within the exhaust line). Vacuum occurs during cold quick starts with cold piping.	Both disks replaced with an improved design that has a structural backing to prevent flexing during exhaust line vacuum conditions.	Improved design appears to eliminate the cyclic fatigue failure mode.	AEOD Report E402[11] provides additional examples of turbine exhaust rupture disk failures.

Table A-1 HPCI Pump or Turbine Fails to Start - Industry Survey Results

Failure Desc.	Root Cause	Corrective Measures	Comments	Inspection Guidance
Water hammer induced disk rupture.	Exhaust diaphragm ruptured by water carryover from exhaust line drain pot due to a blocked drain line.	Blocked line cleared; rupture disk replaced.	A similar event has occurred at another plant. Duration and frequency of exhaust line blowdown increased.	
FLOW CONTROLLER FAILURES Failure to control in automatic.	Defective amplifier card and solder joint attributed to aging.	Repairs performed.	Failures appear to be aging related, yet it appears some licensees do not intend to periodically replace sensitive equipment or otherwise address the root cause of these failures.	Ambient conditions in areas containing this equipment should be verified against specifications.
	Dropping resistor failed in the instrument amplifier circuitry due to normal heat of operation.	Resistors R26, R24, and zener diode C24 all appeared to be affected by ambient temperatures and were replaced.		
	Intermittent operation of internal switch contacts did not allow the controller to read the flow setpoint in auto.	The slight oxidized contacts were cleaned and lubricated. In the long term, permanent jumpers will be installed to bypass the switches.		
Gear train failure.	Loose fastener caused intermediate gear to unmesh which prevented adjustment of the controller setting.	Procedures will be revised to require a periodic check of the gear train and fasteners.		
Miscalibration	Flow controller indicated a flow of 400 gpm when system not in operation. Failure attributed to miscalibration.	Controller recalibrated.		
TURBINE CONTROL VALVE FAULTS Control oil leak.	Oil supply line nipple leaking because plant personnel stepped on line to gain access to control valve.	Nipple repaired; plant personnel informed of failure cause.		

Table A-1 HPCI Pump or Turbine Fails to Start - Industry Survey Results

Failure Desc.	Root Cause	Corrective Measures	Comments	Inspection Guidance
Throttle valve lifting beam bolting failure.	Six of the eight lifting beam bolts failed due to stress corrosion cracking of improperly heat treated bolts. The remaining two bolts were cracked.	Licensee to change thread lubricant; non-metal bearing petroleum jelly recommended.	Per AEOD Report T906[12], improper heat treatment and the use of a copper based anti-seizure compound were major contributors to this failure.	
LOSS OF LUBE OIL COOLING PCV-F035 failures.	PCV_F035 had an incorrect diaphragm installed due to inadequate controls to update plant information with industry experience.	Formation of a procurement engineering group.	Additional LER reported a diaphragm failure resulting in a 5 gpm leak. No cause stated.	
MISCELLANEOUS	Used auxiliary oil pump to flush oil through the governor to clear a ground. Subsequently, system isolated on startup because the oil pump causes the stop and control valves to go full open.	A modification was proposed to eliminate ramp generator initiation on auxiliary oil pump startup, unless a valid initiation signal is present.	The periodic use of the auxiliary oil pump is a common practice that can disable the HPCI system.	Operating procedures should be reviewed to ensure that cautions identify HPCI system inoperability when the auxiliary oil pump is running.

Appendix A-2

Selected Examples of Additional HPCI Failure Modes
Identified During Industry Survey

Table A-2 Summary of Illustrative Examples of Additional HPCI Failure Modes

Failure Desc.	Root Cause	Corrective Measures	Comments	Inspection Guidance
HPCI Failure 3 - False High Steamline Differential Pressure Isolation Signal	Differential pressure transmitter failed due to inadequate connection of amplifier condition card was either incorrectly seated during installation or worked loose.	Amplifier card connection was secured.	Rosemont Transmitter	NRC Information Notice 82-16 provides additional information on steamline pressure measurement.
	Miscalibration and a stuck pressure indicator disabled both divisions of high ΔP transmitters.	Wrong conversion value caused miscalibration and was corrected.	Rosemont Transmitter	
	Transmitter operating outside tolerances due to incorrect setpoint adjustment	Recalibrated transmitter	Conservatively narrow instrument tolerances were used during the setpoint adjustment. The instrument was a Rosemount Transmitter.	
	Setpoint drift cause spurious system isolations	Setpoint was adjusted.	Barton transmitter	Increased calibration frequency may be necessary.
	Setpoint draft caused by moisture intrusion through the dial rod shaft seal.	Unknown	Barton transmitter.	
HPCI Failure 4 - Turbine Steam Inlet Valve [F001] fails to open	Mechanical/thermal binding of disk due to inadequate clearances.	Interim corrective action was drilling a hoke in the valve disk. Double disks were to be installed during a failure refueling outage as a long term solution.	This failure was attributed to procedural and training inadequacies.	
	Thermal binding of disk	Replaced motor gears and installed larger power supply cable to motor.	The thermal binding can occur for ~2 hours after system is returned to service following a cooldown.	A four hour system warmup may be required by procedures to circumvent this problem.
	Motor failure	Surge protection added to shunt coil of DC motor control circuitry.	Motor failure caused by high voltage transient in shunt coil that occurred when supply breaker opened.	

Table A-2 Summary of Illustrative Examples of Additional HPCI Failure Modes

Failure Desc.	Root Cause	Corrective Measures	Comments	Inspection Guidance
HPCI Failure 4 - (cont'd)	Motor failure.	Valve repaired and torque switch adjustment screws were correctly torqued.	Motor windings failed due when torque setting out of adjustment due to loose torque switch adjustment screws.	Other safety related MOVs were also affected. Procedures were revised and torque switch limiter plates were installed.
	Valve motor failure due to incorrect steam lubrication	Valve motor was replaced.		
	Licensee review determined that valve might not open due to insufficient torque.	Removed step starting resistors.	Other DC MOVs were also evaluated.	INPO SER-25-88 and NRC Information Notice 88-72 provide further guidance.
HPCI Failure 5 - Pump Discharge Valve [F006] Fails to Open	Mispositioned auxiliary contacts in starting time delay relay for valve motor.	Replaced contacts.		
	Valve motor failure	Valve motor replaced.	Failure attributed to heat related breakdown of valve motor internals.	
	Licensee review determined that valve may have insufficient torque to open.	Step starting resistors had not been considered in the torque analyses and were removed.	Potential problem may affect other DC MOVs	INPO SER 25-88 and NRC Information Notice provide additional guidance.
HPCI Failure 6 - Suppression Pool Suction Line Valves Fail to Open	Motor failure. Winding insulation degraded due to high voltage transients.	Replaced motor. Voltage surge protection added to circuitry.	High voltage transients occurred as supply breaker was opened.	
	Torque switch out of adjustment.	Recalibrated.		
	Limit switch failure	Replaced limit switch.		
	Valve stem separated from disk	Valve repaired.	Three bolts failed due to tensile overload. Other similar valves were inspected.	These valves were manufactured by Associated Control Equipment, Inc.
HPCI Failure 7 - Minimum Flow Valve Fails to Open	Valve inoperable due to damaged motor starter disconnect switch.	Switch replaced.	Damage resulted from overtravel of operating handle due to poor design.	Design changes may be required as a result of this failure.

Table A-2 Summary of Illustrative Examples of Additional HPCI Failure Modes

Failure Desc.	Root Cause	Corrective Measures	Comments	Inspection Guidance
HPCI Failure 8 - System Actuation Logic Fails	Fuse failure due to electrical grounding.	Fuse replaced and ground corrected.		
	System failed to actuate due to inadequate seal in time.	Design modified.	Further discussion in AEOD Report E407.[ ]	
HPCI Failure 9 - False High Area Temperature Isolation Signal	Failed power supply resistor	Resistor replaced.		
	Failed temperature monitoring module.	Module replaced.	New model replacement considered.	
	Design error	Minimum intake setpoint temperature was increased.		
HPCI Failure 10 - False Low Suction Pressure Trip	Pressure switch isolation valve inadvertently closed.	None.	Isolated pressure switch actuated due to changing environmental conditions.	
HPCI Failure 11 - False High Turbine Exhaust Pressure Signal	Corrosion of pressure switch seals.	Pressure switch replaced.	Seal corrosion allowed moisture into casing and shorted wiring.	
HPCI Failure 12 - Normally Open Turbine Exhaust Valve Fails Closed	Exhaust line swing check valve failure blocked MOV	Check valve replaced.	Failure of check valve was attributed to overstressed cycling due to high exhaust pressure.	References [11] and [14] provide further information.
HPCI Failure 13 - CST/Suppression Pool Logic Fails	Level switches out of calibration	Switches replaced.	Accumulation of foreign material on float caused failure.	

DISTRIBUTION

No. of Copies	
OFFSITE	
	U.S. Nuclear Regulatory Commission
	A. El Bassoni OWFN 10 E4
	W. D. Beckner OWFN 10 E4
	K. Campe OWFN 10 E4
10	J. Chung OWFN 10 E4
	F. Congel OWFN 10 E4
	B. K. Grimes OWFN 9 A2
	J. N. Hannon OWFN 13 E21
	E. V. Imbro OWFN 9 A1
2	H. E. Polk OWFN 12 H26
4	Susquehanna Resident Inspectors Office
4	U.S. Nuclear Regulatory Commission - Region 1
2	J. Bickel EG&G Idaho, Inc. P.O. Box 1625 Idaho Falls, ID 83415

No. of Copies	
2	B. Gore Pacific Northwest Lab. Richland, WA 99352
ONSITE	
26	Brookhaven National Lab.
	W. Gunther (10) R. Hall J. Higgins W. Shier (5) J. Taylor R. Travis M. Villaran Technical Publishing (5) Nuclear Safety Library (2)