Chapter 10: STEAM AND POWER CONVERSION

TABLE OF CONTENTS

Section	Title	Page
10.1	SUMMARY DESCRIPTION	10.1-1
10.2	TURBINE-GENERATOR	10.2-1
10.2.1	Design Basis	10.2-1
10.2.1.1	Power Generation Objective	10.2-1
10.2.1.2	Power Generation Design Basis	10.2-1
10.2.2	Description	10.2-1
10.2.3	Turbine Disk Integrity	10.2-4
10.2.3.1	Design	10.2-4
10.2.3.2	Inservice Inspection	10.2-4
10.2.4	Evaluation	10.2-5
10.3	MAIN STEAM SUPPLY SYSTEM	10.3-1
10.3.1	Design Bases	10.3-1
10.3.1.1	Power Generation Objective	10.3-1
10.3.1.2	Power Generation Design Bases	10.3-1
10.3.1.3	Safety Design Basis	10.3-1
10.3.2	Description	10.3-1
10.3.3	Safety Evaluation	10.3-3
10.3.4	Inspection and Testing	10.3-3
10.3.5	Steam and Feedwater Materials	10.3-4
10.3.5.1	Fracture Toughness	10.3-4
10.3.5.2	Material Selection and Fabrication	10.3-5
10.4	OTHER FEATURES OF STEAM AND POWER CONVERSION SYSTEM	10.4-1
10.4.1	Main Condenser	10.4-1
10.4.1.1	Design Bases	10.4-1
10.4.1.1.1	Power Generation Objective	10.4-1
10.4.1.1.2	Power Generation Design Bases	10.4-1
10.4.1.2	Description	10.4-1
10.4.2	Main Condenser Gas Removal System	10.4-2
10.4.2.1	Design Bases	10.4-2
10.4.2.1.1	Power Generation Objective	10.4-2
10.4.2.1.2	Power Generation Design Bases.	10.4-2
10.4.2.2	System Description	10.4-2

Chapter 10: STEAM AND POWER CONVERSION

TABLE OF CONTENTS

Section	Title	Page
10.4.2.2.1	Steam Jet Air Ejector	10.4-2
10.4.2.2.2	Mechanical Vacuum Pump	10.4-2
10.4.3	Turbine Gland Sealing System	10.4-3
10.4.3.1	Design Bases	10.4-3
10.4.3.1.1	Power Generation Objective	10.4-3
10.4.3.1.2	Power Generation Design Bases	10.4-3
10.4.3.2	Description	10.4-3
10.4.4	Turbine Bypass System	10.4-3
10.4.4.1	Design Bases	10.4-3
10.4.4.1.1	Power Generation Objective	10.4-3
10.4.4.1.2	Power Generation Design Bases	10.4-3
10.4.4.1.3	Safety Design Bases	10.4-4
10.4.4.2	Description	10.4-4
10.4.5	Circulating Water System	10.4-4
10.4.5.1	Design Bases	10.4-4
10.4.5.1.1	Power Generation Objective	10.4-5
10.4.5.1.2	Power Generation Design Bases	10.4-5
10.4.5.2	Description	10.4-5
10.4.5.3	Safety Evaluation	10.4-6
10.4.6	Condensate Cleanup System	10.4-7
10.4.6.1	Design Bases	10.4-7
10.4.6.1.1	Power Generation Objective	10.4-7
10.4.6.1.2	Power Generation Design Bases	10.4-7
10.4.6.2	Description	10.4.7
10.4.7	Condensate and Reactor Feedwater Systems	10.4-10
10.4.7.1	Design Bases	10.4-10
10.4.7.1.1	Power Generation Objective	10.4-10
10.4.7.1.2	Power Generation Design Bases	10.4-10
10.4.7.1.3	Safety Design Basis	10.4-10
10.4.7.2	Description	10.4-10
10.4.7.2.1	Condensate Pumps	10.4-11
10.4.7.2.2	Feedwater Heaters	10.4-11
10.4.7.2.3	Reactor Feedwater Pumps	10.4-11
10.4.7.2.4	Feedwater Piping	10.4-11
10.4.7.2.5	Hotwell Transfer System	10.4-12
10.4.7.3	Piping Inspections	10.4-12
REFERENCES FOR SECTION 10.4		10.4-13

LIST OF TABLES

Tables	Title	Page
10.2-1	TURBINE – GENERATOR OPERATING CONDITIONS . .	T10.2-1

LIST OF FIGURES

Figures	Title
10.2-1	Turbine - Generator Heat Balance Rated Power
10.2-2	Turbine Shielding Modificaitons
10.2-3	Site Plan Showing Site Boundary Doses
10.3-1 Sheet 1	Main Steam System P&ID
10.3-1 Sheet 2	Main Steam System P&ID
10.3-1 Sheet 3	Main Steam System P&ID
10.4-1 Sheet 1	Turbine Extraction Steam and Drains P&ID
10.4-1 Sheet 2	Turbine Extraction Steam and Drains P&ID
10.4-1 Sheet 3	Turbine Extraction Steam and Drains P&ID
10.4-1 Sheet 4	Turbine Extraction Steam and Drains P&ID
10.4-1 Sheet 5	Turbine Extraction Steam and Drains P&ID
10.4-1 Sheet 6	Turbine Extraction Steam and Drains P&ID
10.4-2	Circulating Water System P&ID
10.4-3	Condensate Demineralizer System P&ID
10.4-4 Sheet 1	Condensate and feedwater P&ID
10.4-4 Sheet 2	Condensate and feedwater P&ID

Chapter 10

STEAM AND POWER CONVERSION

10.1 SUMMARY DESCRIPTION

The power conversion systems are designed to produce electrical energy through the conversion of a portion of the thermal energy contained in the steam supplied from the reactor, to condense the turbine exhaust steam into water and to return the water to the reactor as heated feedwater with essentially all of its gaseous, dissolved, and particulate impurities removed. The power conversion systems include the turbine-generator, main condenser, main condenser gas removal and turbine sealing equipment, turbine bypass system, circulating water system, condensate demineralizer, condensate and reactor feedwater systems, and the condensate storage and transfer system. These subsystems are required for the energy conversion of high-pressure steam to electric power.

The heat rejected to the main condenser is removed by the circulating water system. The saturated steam produced by the boiling water reactor (BWR) is passed through the high-pressure turbine where the steam is expanded and then exhausted through the moisture separator/reheaters. Moisture is removed in the moisture separators, and the steam is superheated in the reheaters and then passed through the low-pressure turbines where the steam is again expanded. From the low-pressure turbines, the steam is exhausted into the condenser where the steam is condensed and deaerated. A small part of the main steam supply is continuously used by the steam jet air ejectors offgas jet compressor and the steam seal regulator (see Figure 10.2-1). The condensate pumps, taking suction from the condenser hotwell, deliver the condensate through the air ejector condensers, steam packing exhauster condenser, condensate demineralizer, and five stages of low-pressure feedwater heaters to the reactor feed pumps. The reactor feed pumps supply feedwater through a high-pressure feedwater heater and the feedwater control valves to the reactor. Steam for heating the feedwater in the heating cycle is supplied from turbine extractions. The feedwater heaters also provide the means of handling the moisture separated from the steam in the turbine and in the moisture separators. Normally, the above requirements use all steam being generated by the reactor, but an automatic pressure-controlled steam bypass system is provided to discharge excess steam (up to 20.6% of the design flow) directly to the condenser.

10.2 TURBINE-GENERATOR

10.2.1 DESIGN BASIS

10.2.1.1 Power Generation Objective

The power generation objective of the turbine-generator is to receive steam from the BWR and to convert a portion of the thermal energy to electric power.

10.2.1.2 Power Generation Design Basis

The turbine-generator is designed for the conditions shown in Table 10.2-1. (See also Figure 10.2-1.)

10.2.2 DESCRIPTION

The turbine is a General Electric Company M6R 1800 rpm, tandem-compound, four-flow, three casing, condensing, two stage reheat unit with 38 in. last-stage buckets.

The turbine consists of one single-flow high-pressure shell plus two double-flow low-pressure shells. Steam from the high-pressure shell is reheated with extraction steam and main steam in two stages before entering the low-pressure sections. There are six extraction stages used in reactor feedwater heating, as shown in detail in Figure 10.2-1.

Turbine controls include an electrohydraulic control system, control valves, main stop valves, combined stop-intercept valves, initial pressure regulator and backup controller, steam bypass system, and emergency mechanical overspeed trip.

There is a stop valve and a turbine control valve in each of the four main steam lines. With the stop valves open, steam flow to the high-pressure turbine shell is controlled by the turbine control valves. The DAEC utilizes partial-arc admission turbine control. The electrohydraulic control system operates these four valves sequentially. Three of the four control valves open simultaneously. Once these three control valves are fully opened the fourth control valve opens to deliver 100% steam flow. All four control valves are equipped with mechanical stops to prevent over travel.

The generator is a direct-driven, three-phase, 60-Hz, 1800-rpm, 22,000-V, conductor-cooled generator rated at 715,225 kVa with a hydrogen pressure of 45 psig, and a 0.95 power factor, and a 0.58 short-circuit ratio. The exciter system is a mechanically connected alternator with solid-state rectifiers. The exciter is rated at 500-V, 1375-kW.

The reactor power level is varied to meet electrical system demand. It is regulated by control rod position and reactor recirculation flow. Control rod position is manually adjusted during normal operation; recirculation flow control is also adjusted to raise or lower electrical output. The initial pressure regulator adjusts turbine control valve position to maintain constant steam pressure at the turbine stop valves.

The turbine is equipped with a steam bypass system that will bypass up to 20.6% of rated flow to the condenser to control steam pressure during load rejections, reactor heatup, turbine startup, and reactor cooldown. The turbine bypass system minimizes the reactor vessel pressure rise, thus reducing reactor safety relief valve operation. The reactor will scram because of high pressure resulting from load rejections of magnitudes greater than the capacity of the turbine bypass system.

Hydrogen for the main generator cooling system is supplied from the Hydrogen Water Chemistry system, described in Section 9.3.5.

The turbine-generator is equipped with alarms and interlocks for lube-oil pressure, seal-oil pressure, exhaust vacuum, generator cooling, vibration, and field excitation.

The turbine-generator is a base-load-type machine. Because of the cyclic nature of the system, and particularly in the early years of the plant operation, base-load power level will be changed as required by system demands. Other considerations that will impact on the amount and frequency of the cyclic loading are system reliability considerations and any operating limitations that my be imposed by the plant design.

The turbine-generator operation is limited by its design as follows:

Maximum gross generation	693,768 kW
Maximum rotor speed	1980 rpm
Maximum exhaust pressure (at rated power)	5.75 in. Hg absolute
Maximum momentary throttle pressure	1255 psia
Maximum continuous throttle pressure	994 psia
Maximum momentary throttle temperature	573°F
Maximum continuous throttle temperature	544°F

Turbine-Generator Overspeed Control

The turbine control system provides two independent valves for defense against overspeed in each admission line to each turbine: a main stop valve and main control valve in series before the high-pressure turbine and a combined intermediate valve in series, one called an intercept valve and the other called an intermediate stop valve, at the inlet to each low-pressure turbine. On a moderate speed increase, the normal speed control system tends to close the control valve. During a higher overspeed, the

intermediate stop, main stop, main control valve, and intercept valve are tripped closed rapidly on the removal of the fluid pressure in the emergency trip system. Valve opening actuation is provided by a 1600-psig hydraulic system that is totally independent of the bearing lubrication system. Valve-closing actuation is provided by springs and steam forces on the reduction or relief of fluid pressure. The system is designed so that a loss of fluid pressure for any reason leads to valve closing and consequent shutdown. All valves, including their rapid-closing devices, can be tested during normal operation with minor load perturbation. The fast-closing feature of any valve is fully operative while the valves are being tested.

The sensing of turbine-generator overspeed is accomplished by the elctrohydraulic control (EHC) system providing the following three independent means of speed sensing:

1. The operating speed signal is obtained from two magnetic pickups on a toothed wheel at the high-pressure turbine shaft. An increase in either of the speed signals tends to close the control valves. The loss of both speed signals will trip the emergency trip system within the electrohydraulic control system. The operation of both speed signals is continuously monitored by the alarm circuit within the electrohydraulic system.

2. The mechanical overspeed trip uses an unbalanced rotating ring and a stationary trip finger to dump the emergency trip fluid system pressure directly on reaching its set speed, typically 110% of rated speed. The main stop, intermediate stop, intercept, and control valves are tripped. The operation of the overspeed trip mechanism and the mechanical trip valve can be tested during normal operation.

3. The electrical backup overspeed trip will trip the emergency trip fluid system that is within the electrohydraulic control system. The trip signals are generated on reaching the trip speed, typically 111.5% of rated speed. The operation of the backup overspeed trip and the electrically operated master trip solenoid valves can be tested during normal operation.

To prevent overspeed, the turbine generator is equipped with a sequential tripping circuit and a reverse power relay in series. It is designed to trip the generator line breaker only after all of the valves in the steam lines to the turbine have been closed and the generator begins to act like a motor and use electrical power instead of producing power. Under these circumstances, steam flow is below a level that could produce an overspeed and the generator line breakers are opened. The reverse power relay has a 2-min time delay in parallel with it that will open the breakers after 2 min in case the reverse power relay does not function.

The potential for overspeed of the turbine-gneator from energy stored in the extraction lines and feedwater heaters has been reviewed by the turbine manufacturer during the design stages and it was determined that the entrained steam does not have potential to overspeed the unit beyond a safe limit. Free-swing check valves are used in the turbine extraction lines in lieu of positive closing nonreturn valves because of the small overspeed potential of the feedwater heater system.

The conformance of the overspeed protection system to the applicable requirements of the IEEE 279 is a follows: A single failure of any component will not lead to destructive overspeed. A multiple failure, involving preexisting combinations of undetected electronic faults and/or mechanical stuck valves at the instant of load loss, is required. The probability of such joint occurrences is extremely low, resulting from both the inherently high reliability of the components and the frequent inservice testing of all valves.

There had been 71 turbine trips from the time that the plant went into operation through June 1980. These included normal shutdowns. None of these trips were caused by inadvertent turbine overspeeds. A turbine overspeed trip test is usually conducted in conjunction with turbine maintenance.

10.2.3 TURBINE DISK INTEGRITY

10.2.3.1 Design

The DAEC turbine is a GE M6R, tandem-compound, four-flow machine, with 38-in. last-stage buckets and two-stage reheat.

The low-pressure rotors have been replaced with rotors of “monoblock” design, which have wheels that are integral to the shaft

10.2.3.2 Inservice Inspection

Although there are no code requirements for inservice inspection of the turbine-generator or the steam lines outside the isolation valves, inspections and monitoring of operation are conducted. During operation the turbine is monitored by a series of temperature, pressure, vibration, and differential expansion sensors which enable the operator to detect any malfunction. In addition, recorders are provided to give permanent records of vibration-eccentricity and temperature-expansion. The operator also has monitors on auxiliary systems of the turbine, such as valve and switch positions, thrust bearing wear, and pump operation. During operation on a routine basis, visual inspections are made. Photography and video recording are used on a routine basis to compare the condition of components with previous known conditions. Also, periodically the turbine will be completely dismantled during a planned outage and complete inspection made of its normally inaccessible parts. The inspection utilizes

magnetic particle, magnoglo, dye penetrant, or ultrasonic methods as required, and will be conducted by DAEC personnel or consultants as deemed necessary. Any indications from these inspections which are determined to be flaws or cracks, will be analyzed for their properties and effects, taking into account their location and the stresses at those locations.

10.2.4 EVALUATION

A turbine missile analysis was performed for the original rotors, which is assumed to be bounding for the monoblock design. The results are presented in Section 3.5.1.3.

A comprehensive study was undertaken to determine, by calculational methods, what the site boundary dose was expected to be from direct and sky-shine radiation. This included a Monte Carlo-type calculation for determining the appropriate source terms.

As the results of this study became available, a decision had to be made as to whether additional shielding was necessary to reduce the calculated dose. However, because of the inaccuracies inherent even in sophisticated shielding calculations, a comprehensive program to measure the site boundary dose was initiated after the plant began commercial operation. The results of this program form the basis for the final turbine shielding configuration. The comprehensive Monte Carlo-type study was conducted to determine, by calculational method, the site boundary dose from expected direct and sky-shine radiation.

As a result, additional shielding was installed [redacted] These changes are shown in Figure 10.2-2. Turbine-generator shielding is shown in Figure 1.2-5.

In order to reduce outage duration and dose, the 3" thick upper sections of the south and north turbine steel shield wall were removed in 2001. The effect of the removal on the site boundary dose was confirmed to be negligible by the DAEC Annual Report to USNRC, Radiation Environmental Monitoring Program, January 1 to December 31, 2002. The report concluded that no plant effect was indicated by the TLDs when dose results were compared to the estimated average natural background for Middle America.

Dose point locations are shown in Figure 10.2-3. The conservatism in the calculations have been confirmed by the actual dose measurement program offsite dose measurements continue to demonstrate that even with the advent of the use of Hydrogen Water Chemistry, as well as the Extended Power Uprate program, offsite radiation levels due to sky-shine undetectable compared to background radiation.

Table 10.2-1

TURBINE-GENERATOR OPERATING CONDITIONS

Parameter	Rated Power
Steam flow to HP Turbine (983 psia and 0.41% moisture at the TSV)	7,983,655 lb/hr
Back pressure	2.0/2.75 in. Hg abs
System makeup	0%
Feedwater temperature to reactor	431.4°F
Generator output	676,425 kW
Stages of feedwater heating	6

Turbine Assumed to be in New and Clean Condition

TURBINE AND EXTRACTION ARRANGEMENT IS SCHEMATIC ONLY

THE VALUE OF GENERATOR OUTPUT SHOWN ON THIS HEAT BALANCE IS AFTER ALL POWER FOR EXCITATION AND OTHER TURBINE-GENERATOR AUXILIARIES HAS BEEN DEDUCTED

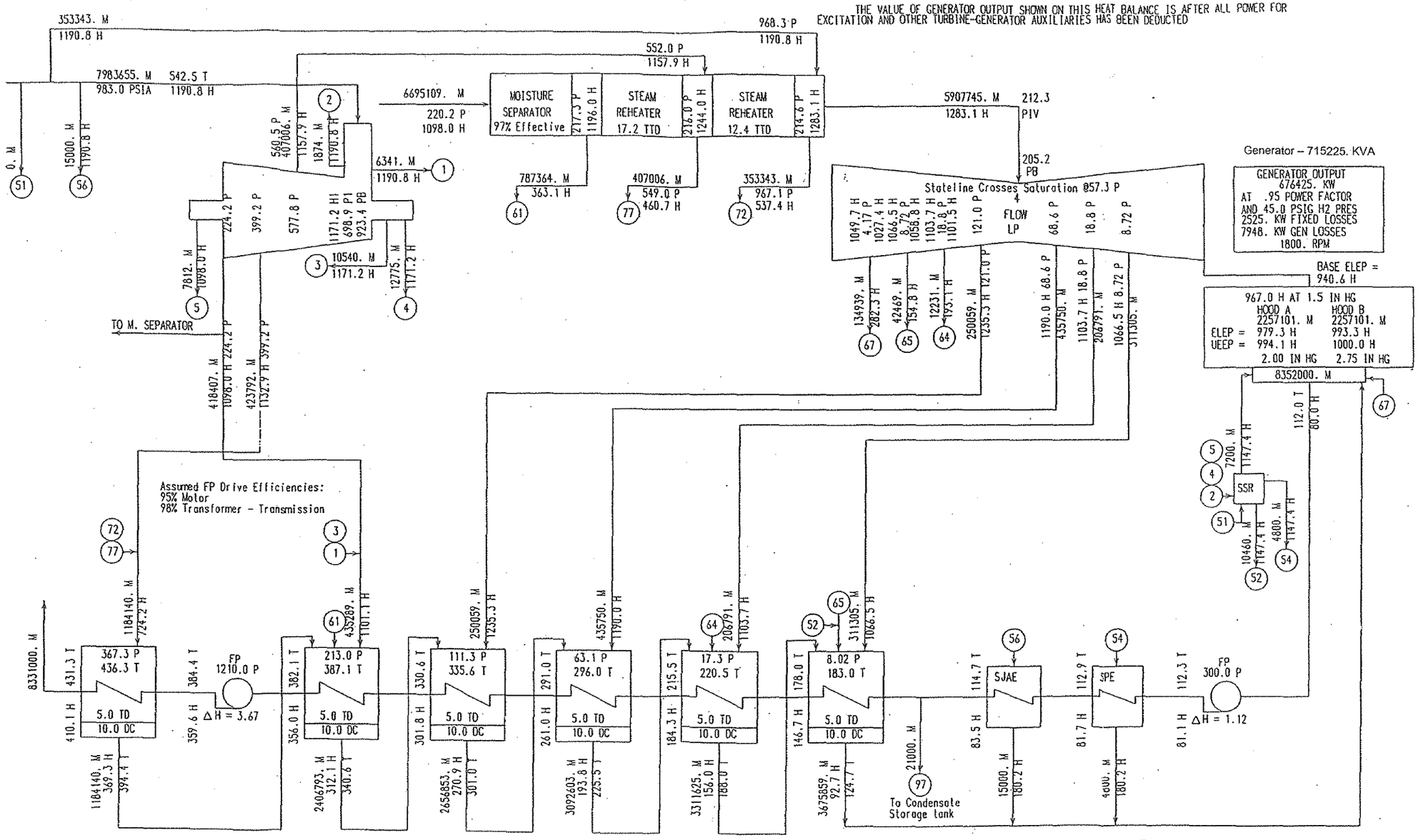

VALVE BEST POINT NET HEAT RATE = $\dfrac{7962655.\ (1190.8 - 410.1) + 353343.\ (1190.8 - 410.1) + 21000.\ (1190.8 - 48.0)}{(676425. - 9624.)} = 9772 \ \dfrac{BTU}{KW\text{-}HR}$

LEGEND - CALCULATIONS BASED ON 1967 ASME STEAM TABLES
M - FLOW-LB/HR
P - PRESSURE-PSIA
H - ENTHALPY-BTU/LB
T - TEMPERATURE-F DEGREES

DUANE ARNOLD ENERGY CENTER
IES UTILITIES, INC.
UPDATED FINAL SAFETY ANALYSIS REPORT

Turbine-Generator Heat Balance
Rated Power

Figure 10.2-1

10.3 MAIN STEAM SUPPLY SYSTEM

10.3.1 DESIGN BASES

10.3.1.1 Power Generation Objective

The power generation objective of the main steam lines is to conduct steam from the reactor vessel through the primary containment to the steam turbine.

10.3.1.2 Power Generation Design Bases

1. The main steam lines are designed with suitable accesses to allow inservice testing and inspections.

2. The main steam lines are designed to conduct steam from the reactor vessel over the full range of reactor power operation.

10.3.1.3 Safety Design Basis

The main steam lines are designed to accommodate operational stresses, such as internal pressures, without a failure that could lead to a release of radioactivity in excess of the guideline values in published regulations.

10.3.2 DESCRIPTION

All main steam piping is classified according to service and location. The materials used in piping are in accordance with the applicable design code and supplementary requirements. The main steam system piping and instrumentation diagram (P&ID) is shown in Figure 10.3-1.

The main steam lines meet Seismic Category I requirements up to, but not including, the turbine stop and control valves.

The reheater steam lines and turbine bypass lines also meet Seismic Category I requirements.

The nuclear piping for the DAEC main steam line, reheater steam line, turbine bypass lines, and all branch lines 2.5 in. or larger in diameter is designed in accordance with ANSI B31.1.0 and the applicable Code Cases N-2, 7, 9, and 10 with the following exceptions to the nuclear code cases applied to branch line vales larger than 2.5 in. in diameter:

1. Comply with the positive sealing requirements for bonnet and stem leaks as specified in Code Case N-2. Conventional valve design in accordance with ANSI valve standards is provided.

2. Provide full radiography of valve pressure boundary castings because Code Case N-2 makes this a requirement only for cast austenitic materials. The imposition of this requirement on the standard carbon steel valves used in most of the systems, other than Class 1, creates a question of doubt as to acceptability because of standard manufacturing practices for this valving application. This is because these valves for such low-pressure/low-temperature systems in a BWR are standard shelf-type valves that have conformed with ANSI (formerly ASA) standards for many years, and as such, the body castings are not amenable to passing a Class 1 radiography inspection. Dye penetrant or magnetic particle inspection of the body castings is employed inside and out to achieve a full surface inspection. The carbon steel valves used in Class 2 systems receive a shop hydrostatic test in accordance with the applicable standards and codes.

For operational and functional reasons, the turbine stop valves are 100% volumetrically examined by GE.

Nondestructive examinations before initial plant startup of pressure boundary weldments were performed in the main steam line and on branch lines larger than 2.5 in. in nominal diameter up to the first branch valve.

The main steam lines down through the turbine stop and control valves and including the turbine steam leads up to the turbine inlet have been subjected to a seismic analysis. Branches connecting to the main steam line of a size, configuration, and/or mass that may have a significant contribution have also been included, such as piping to the steam bypass valve chest. The analysis of these lines encompasses the piping and inline components (principally valves) between anchor points. The downstream anchor point has been chosen to include the first valve downstream of the second main steam line isolation valve. This includes the consideration of all branch lines 2.5 in. or larger in diameter.

1. The analysis uses a multi-degree-of-freedom dynamic model in accordance with the requirements of Section 3.7.1.

2. The turbine building is designed to Uniform Building Code (UBC) Zone 1 as a minimum. However, in order to determine the end displacements and seismic forces on the main steam piping, analyses were performed to determine needed response spectra at the pipe anchor points.

A simplified lumped-mass mathematical model employing response spectra inputs to simulate earthquake response of the turbine building was used to determine the response of the main steam line support system for an OBE. After determining the response of the support system, a response spectra diagram was prepared to show relative response motion acceleration and velocity as a function of the main steam piping system frequencies.

The forces induced by the earthquake loading in the main steam piping were included with other operating loads to properly design the pipe supports and anchors.

10.3.3 SAFETY EVALUATION

Differential pressures on reactor internals under the assumed accident conditions of ruptured steam line are limited by the utilization of flow restrictors and the utilization of four main steam lines.

All main steam and feedwater piping is designed as described in Sections 3.2.1, 3.2.2 , and 5.2.1.

10.3.4 INSPECTION AND TESTING

For that portion of the main steam line downstream of the second isolation valve, inspections have been performed visually and with appropriate testing when a steam line has been operated beyond its design (although it was not Iowa Electric practice to perform scheduled inspections of steam lines in power-producing facilities). The same practice has been continued for the DAEC steam lines. In order to allow inspection when necessary, essentially 100% access has been provided for the main steam lines and branch connections 2.5. in. in diameter or larger.

Further details on preoperational and inservice inspection are described in Sections 6.6, 5.2.4, and 3.9.6.

In addition, due to the increase in steam flowrate due to Extended Power Uprate, vibration monitoring was performed to assure that unacceptable flow-induced vibrations were not present (Reference Section 14.2).

The type and extent of nondestructive examination applied to the pipe, valves, and fittings in the main steam lines up to and including the turbine stop valves were as follows:

1. All circumferential and longitudinal full penetration welds on pressure-retaining components were fully examined by radiography. Accessible surfaces of each weld were examined by either liquid penetrant or magnetic particle methods.

2. All branch connection welds larger than 4 in. were fully examined by radiography. Accessible surfaces of all branch connection welds were examined by either liquid penetrant or magnetic particle methods.

3. Fillet welds, socket welds, and attachment welds such as supports, lugs, anchors, and guides were examined on all accessible surfaces by either liquid penetrant or magnetic particle methods.

4. Seamless pipe was ultrasonically examined by the angle beam method. Plate for welded pipe, including fittings, was ultrasonically examined by the straight beam method.

5. Castings for pressure-retaining components were fully examined by radiography. All castings for pressure-retaining components were examined on all accessible surfaces by either liquid penetrant or magnetic particle methods.

6. Forgings for pressure-retaining components were ultrasonically examined by angle beam and/or straight beam methods and by the liquid penetrant or magnetic particle methods. Forged fittings were examined by the liquid penetrant or magnetic particle methods.

Visual inspections of the steam lines and turbine stop valves are conducted during outages. Special attention is given to detecting indications of leakage and changes in position of pipe hangers. Photography is used to compare existing conditions with previous ones. Also, periodically (in accordance with the Nuclear Insurers Machinery Loss Control Program) the turbine stop valves will be completely dismantled during a planned outage for a complete inspection of their normally inaccessible parts.

10.3.5 STEAM AND FEEDWATER MATERIALS

10.3.5.1 Fracture Toughness

See Section 5.2.

10.3.5.2 Material Selection and Fabrication

Seamless pipe is ASTM A-106, Grade B. Rolled and welded pipe is ASTM A-155, Class 1, Grade KC 70.

Certification in writing is required form the manufacturer that all pipe, fittings, flanges, bolting materials, valves, and welding wire meet applicable material specifications along with mill test reports.

One hundred percent radiography was required on all butt welds during fabrication and erection. See Section 17.1.9 for further details on fabrication assembly and erection.

10.4 OTHER FEATURES OF STEAM AND POWER CONVERSION SYSTEM

10.4.1 MAIN CONDENSER

10.4.1.1 Design Bases

10.4.1.1.1 Power Generation Objective

The power generation objective of the main condenser is to provide a heat sink for the turbine exhaust steam and turbine bypass steam. It also deaerates and stores the condensate for reuse after a period for radioactive decay.

10.4.1.1.2 Power Generation Design Bases

1. The condenser has an exhaust connection for each of the low-pressure turbine shells.

2. The condenser is designed to accept and condense the rated turbine exhaust steam flow at the pressures indicated by Figure 10.2-1.

3. The condenser is designed to accept the required turbine bypass flow during startup or operation and not exceed turbine exhaust temperature or pressure limitations.

4. The condensate is deaerated to provide feedwater of required quality.

5. All steam isolation valves will close on high condenser pressure to avoid rupture disc actuation.

6. The hotwell contains baffles to provide radioactive decay time.

10.4.1.2 Description

The main condenser is a two-pass, divided water box-type of dual-pressure, deaerating design. It is mounted on rigid foundations, with flexible expansion joints provided between the condenser necks and turbine exhaust connections.

Heat rejection in the main condenser is calculated to be 4.324×10^9 Btu/hr at design rating. The condenser contains approximately 416,770 ft^2 of heat-transfer surface.

Being of the deaerating type, the condenser removes the noncondensible gases from the condensate. The dissolved oxygen content of the condensate will be less than 5 ppb at all loads greater than 10% of design throttle flow.

As part of implementation of Extended Power Uprate, additional supports were added to the condenser tubes (i.e., tube staking) to accommodate the higher exhaust flow from the main turbine.

The hotwell contains baffling to provide a minimum retention time of 2 min for radioactive decay of short-lived isotopes.

10.4.2 MAIN CONDENSER GAS REMOVAL SYSTEM

10.4.2.1 Design Bases

10.4.2.1.1 Power Generation Objective

The power generation objective of the main condenser gas removal system is to remove all noncondensibles from the condenser.

10.4.2.1.2 Power Generation Design Bases

1. The main condenser gas removal system is designed to remove all noncondensibles from the condenser including air inleakage and disassociation products originating in the reactor.

2. The main condenser gas removal system is designed to deliver all noncondensibles to the offgas system for processing and to safely withstand a potential explosion.

10.4.2.2 System Description

10.4.2.2.1 Steam Jet Air Ejector

Two full-capacity steam jet air ejectors, with inter- and after-condensers, are provided to remove the air and noncondensibles from the main condenser. Condensate serves as the cooling medium in the inter- and after-condensers. The condensed steam, which may contain dissolved gases, is returned to the main condenser. The noncondensible gases are delivered to the offgas system (Figure 10.4-1, Sheet 1).

Overpressure protection is provided by relief valves on each, steam jet air ejector after-condenser outlet lines. The relief valves discharge to the main condenser.

10.4.2.2.2 Mechanical Vacuum Pump

A mechanical vacuum pump is provided to evacuate the turbine and main condenser during startup and shutdown. The discharge from the mechanical vacuum pump is directed through the same delay line as the turbine gland seal exhaust as described below.

10.4.3 TURBINE GLAND SEALING SYSTEM

10.4.3.1 Design Bases

10.4.3.1.1 Power Generation Objective

The power generation objective of the turbine gland sealing system is to prevent air leakage into, or radioactive steam leakage out of, the turbine.

10.4.3.1.2 Power Generation Design Bases

1. The turbine gland sealing system is designed to seal the turbine when the nuclear steam supply pressure is 200 psig or greater and/or when the auxiliary boiler is in service.

2. The turbine gland sealing system is designed to condense the water vapor removed from the seals and return it to the condenser while exhausting the non condensibles to the offgas system.

10.4.3.2 Description

The turbine gland sealing system provides steam to the turbine seals to prevent air leakage into the turbine and radioactive steam leakage from the turbine. The system collects and condenses sealing steam in the steam packing exhauster condenser, returns it to the main condenser, and discharges noncondensibles through a 1.75-min delay line to the offgas stack. Condensate serves as the cooling medium in the steam packing exhauster condenser. Refer to Figure 10.4-1, Sheet 4.

10.4.4 TURBINE BYPASS SYSTEM

10.4.4.1 Design Bases

10.4.4.1.1 Power Generation Objective

The power generation objective of the turbine bypass system is to pass directly to the condenser that amount of main steam generated by the reactor which exceeds that required by the turbine.

10.4.4.1.2 Power Generation Design Bases

1. The turbine bypass system is designed to control reactor pressure during the following reactor operations:

    a. Heat up to rated pressure.

b. Bringing the turbine up to speed and synchronizing it.

c. Power operation when the reactor steam generation exceeds the turbine steam requirement.

d. Cooling down the reactor.

2. The turbine bypass system capacity is 20.6% of turbine design flow. The system works in conjunction with the turbine control valves to accommodate load rejections.

10.4.4.1.3 Safety Design Basis

The turbine bypass valves' response times are used in determining the effect on the Minimum Critical Power Ratio (MCPR) calculated as a result of a feedwater controller failure maximum demand transient (reference UFSAR Section 15.1.1). Therefore, the turbine bypass valves must meet the following response criteria:

a. The time from event initiation to bypass valve opening is 100 msec.
b. Total response time of the bypass valves to open in order to pass 80% of turbine bypass capacity is 300 msec.

10.4.4.2 Description

The turbine bypass system is the bypass control unit within the electrohydraulic control system (EHC) for the turbine-generator and bypass valves. The steam supply to the bypass valves is from the main steam lines, and steam is discharged directly to the condenser. Each discharge pipe contains an assembly of orifice plates sized to reduce the steam pressure before the steam enters the condenser. Refer to Figure 10.3-1.

Each bypass valve is capable of being individually tested through its full stroke regardless of unit load. Interlocking electric circuits prevent testing more than one valve simultaneously. Provisions are included for remote manual opening of the bypass valves in their normal sequence for use during plant startup and shutdown. The mode of the manual control is indicated in the main control room.

The position of the turbine bypass valves is indicated in the main control room. Controls and valves are designed so that valves close on a loss of hydraulic or electric power. The bypass will also close and/or will not open if main condenser vacuum is less than 7 in. Hg vacuum (nominal).

10.4.5 CIRCULATING WATER SYSTEM

10.4.5.1 Design Bases

10.4.5.1.1 Power Generation Objective

The power generation objective of the circulating water system is to provide a continuous supply of cooling water to remove the heat rejected to the main condenser.

10.4.5.1.2 Power Generation Design Bases

1. The circulating water system is designed to circulate the flow required to remove the design heat load from the main condenser.

2. The circulating water system is designed to operate on a closed cycle using induced-draft cooling towers.

3. The cooling towers are designed to remove the heat load of the circulated flow under all predicted weather conditions.

10.4.5.2 Description

The circulating water system is a closed-loop system with two motor-driven pumps circulating cooling water through the main condenser and two induced-draft cooling towers. See Figure 10.4-2.

Each of the vertical, mixed-flow, wet-pit pumps is rated at 150,000 gpm at 88 ft total head. They are installed in a pump house approximately 250 ft east of the turbine building. The sump in which they are installed is gravity-fed from the cooling tower basins by two 78-in. lines. The discharge of each pump is through a 78-in. line to the main condenser, which at design rating rejects 4.324×10^9 Btu/hr to the cooling water.

The heated water is discharged to the cooling towers, each of which normally receives one-half of the total flow. Each tower is a cross-flow type, divided into 12 cells, with motor-driven fans in each cell to induce the required draft. Each single-speed, reversing fan is driven by a 200-hp motor and is rated at 1,471,800 scfm. Each tower is designed for an inflow of 155,500 gpm at 112ºF and an outflow temperature of 87ºF with ambient wet-bulb temperature at 76.5ºF. Flow and cooling capacities of the towers exceed that of the circulating water pumps and main condenser to the extent necessary to handle the discharge from the service water system. This system discharges to the heated side of the circulating water system and passes through the cooling towers.

Water required to make up for evaporation and blowdown from the cooling towers is obtained from the Cedar River. A pumping plant at the river with two river water supply pumps normally operating for plant makeup to the circulating water system delivers a total of 12,000 gpm. The water is piped to the stilling basin which is designed to overflow to the wet-pit sump of the circulating water pumps. The rate of delivery of this makeup water is controlled by modulating valves acting in response to water level at

the cooling tower basins. At full plant power, approximately 8,000 gpm will be required for cooling tower evaporation. Blowdown is limited by the Iowa Department of Natural Resources permit.

Cooling water quality is controlled by chemical additives, including sodium hypochlorite, acid, a stabilizer, a biocide, and a dispersant.

2012-009 The circulating water system pH is maintained to prohibit deposit on the condenser tubes which could lead to plant heat rate limitations.

10.4.5.3 Safety Evaluation

2016-002 The original safety evaluation states failure of safety-related equipment located within the floodable space of 8 feet will not prevent achievement of safe plant shutdown following a circulating water system rupture. The 8 foot depth was obtained by considering the circulating water system contains about 2.4 x 10^6 gallons of water stored in the cooling tower basins, pump house, condenser, and associated piping. 2.4 x 10^6 gallons equates to a volume equal to the turbine building base matt area multiplied by an 8 foot depth. A Turbine Building flooding evaluation was performed in the fall of 2014 which concluded a significant circulating system bellows leak to a complete failure of the bellows would flood [redacted] creating a resulting flood level of no greater than 8 feet (Reference 3).

[redacted]

Safety analysis of degraded circulating water system operation is provided in the analysis of the turbine trip from high power without bypass as an initiator, provided in Chapter 15.

If an expansion bellows failure in the circulating water line should occur either at the condenser or in the pump house, the leak would cause the water level in the cooling tower basin to drop due to insufficient makeup. An 18 inch drop below normal operating level will alarm in the control room alerting the operator of a failure in the river water supply system or a leak in the circulating water system.

Should the level in the system continue to drop, another alarm will be sounded as the pump house pit level drops and the circulating water pumps will be tripped.

10.4.6 CONDENSATE CLEANUP SYSTEM

10.4.6.1 Design Bases

10.4.6.1.1 Power Generation Objective

The power generation objective of the condensate demineralizer system is to ensure that water of the required purity is supplied to the reactor.

10.4.6.1.2 Power Generation Design Bases

1. The condensate demineralizer system is designed to process the reactor feedwater design flow of 16,850 gpm.

2. The condensate demineralizer system is designed to

   a. Remove ionic and particulate material from the condensate to maintain the required reactor water quality with minor condenser tube leakage.

   b. Provide a final polishing of makeup water entering the cycle.

   c. Minimize the effects on water quality that might result from changes in system operation.

3. The condensate demineralizer is also used for torus water cleanup during maintenance operations. The torus water cleanup system is described in Section 9.5.10.

10.4.6.2 Description

The condensate demineralizer system consists of five filter-demineralizer vessels and the associated piping, instrumentation, and controls to facilitate continuous processing of the design condensate flow. Filtration and demineralization are accomplished by coating the vessel septa with powdered resin.

Depending on the requirements and conditions, the units may be operated with a coating of Solka-Floc only, a Solka-Floc underlay with powdered resin overlay, or powdered resin only. A three-way selector switch on the panel for each unit is used to select the cycle for the type of coating being applied. The depleted resin and Solka-Floc are backwashed to the radwaste system for processing and disposal. See Figure 10.4-3.

To backwash each filter, 2750 gal of water are required.

The amount of resin or filter material transferred to the radwaste system is approximately 600 lb per filter vessel (varies depending on chemistry requirements).

Safeguards are provided to prevent the low-pressure precoat piping from being exposed to system pressure and to prevent the accidental discharge of high condensate flows to the radwaste system. Additionally, the Condensate Demineralizer influent and effluent valves are supplied backup air from compressed air bottles, which are sized to enable the valves to remain open for a brief period following a loss of Instrument Air. This would allow time for an operator to respond by opening demineralizer bypass valve (or other appropriate action to prevent a Feedwater Pump trip). Similarly, since the Condensate Pumps are powered from a different power supply than the Condensate Demineralizer control panel, if there is a loss of power to the Condensate Demineralizer control panel only, the logic is such that the Condensate Demineralizers will not isolate when the power is restored, allowing the Condensate Pump(s) and Feedwater Pump(s) to remain in operation (Reference 2).

While operating at design capability, the condensate demineralizer limits feedwater impurities to the following values:

		Maximum Parts per Billion (by weight)
1.	Silica (as $Si0_2$)	5
2.	Iron (as Fe)	5
3.	Copper (as Cu)	2
4.	Nickel (as Ni)	2
5.	Chloride (as Cl)	10

During cleanup before startup, or at other times as necessary, at least one-half of the feedwater flow leaving the high-pressure feedwater heater can be recirculated back to the condenser hotwell to provide additional filtration and demineralization.

The system instrumentation and controls are locally mounted and permit complete remote system operation. Each vessel contains instrumentation to indicate resin exhaustion or plugging by measuring the effluent flow, conductivity, and the pressure drop across the vessel. Specific system problems are annunciated on the local control panel and result in a single alarm in the main control room.

The system is designed for automatic operation following mode initiation. This means the operator is required to initiate each phase of operation but, having once done so, the system will operate automatically through that mode (i.e., backwash, precoat, filter, and hold). In addition to the automatic operation, each valve and motor has a

selector switch on the control panel for manual operation. Normally, all of these should be in the "auto" position except for certain auxiliary equipment that is only operated manually.

The flow through the condensate demineralizers in service is typically balanced, and a minimum system differential is maintained. Each unit has an individual flow controller, an orifice with a flow transmitter, and a discharge throttling valve, which controls flow.

The termination of each filter run is normally because of pressure drop but may also be caused by deterioration of effluent conductivity. At this time, the unit to be backwashed is taken out of service and placed into a holding condition by means of its "HOLD" push button on the control panel.

The manufacturer's experience indicates that a flux rate of 3.96 gpm/ft^2, or less, for prolonged operation is adequate to preserve the filter elements. The system was thoroughly tested and all design bases were verified during preoperational testing.

In order to maintain the flux of condensate through the filter elements below the manufacturer's recommendation all 5 condensate demineralizers should be used during normal operation. Although allowed, operating the system for extended periods of time with only 4 condensate demineralizers in service is not recommended.

An operator controlled bypass has been incorporated into the condensate demineralizer system. The bypassing of condensate flow is permitted only if water quality standards are met in the system effluent. Normally, 100% of the feedwater will be processed through the filter demineralizers.

The filter-demineralizer is located on the system such that all of the condensate flow may be demineralized, including the condensate reject and feed pump seal water.

Individual filter-demineralizer vessels can be isolated. Thus, maintenance can be performed when required on individual filters while leaving the condensate demineralizer system and the plant in operation.

Each filter-demineralizer vessel has an inlet baffle consisting of multiple plates with offset orifices. The purpose of the baffle is to prevent scouring and resin loss from the lower portions of the vessel filter element.

The demineralizers are located in separate shielded compartments to permit personnel access to an inoperative unit for maintenance during plant operation. The units are arranged to permit easy replacement of filter element or other vessel components.

10.4.7 CONDENSATE AND REACTOR FEEDWATER SYSTEMS

10.4.7.1 Design Bases

10.4.7.1.1 Power Generation Objective

The power generation objective of the condensate and reactor feedwater systems is to provide a dependable supply of feedwater to the reactor, to provide feedwater heating, and to minimize water-quality problems.

The power generation objective of the feedwater lines is to provide the piping path for delivery of water back to the reactor vessel.

10.4.7.1.2 Power Generation Design Bases

1. The feedwater equipment and piping was originally designed to provide at least 115% of design flow (105% Nuclear Boiler Rated (NBR) + 10% margin) to the reactor at 1100 psi pressure at the reactor vessel feedwater connections.

2. The feedwater heaters are designed to provide 420°F feedwater to the reactor with six stages of closed feedwater heating.

3. A cleanup recirculation line is provided from the last feedwater heater to the condenser hotwell in order to minimize corrosion product input to the reactor.

4. The feedwater lines are designed with suitable accesses to allow inservice testing and inspections.

5. The feedwater lines are designed to conduct water to the reactor vessel over the full range of reactor power operation.

10.4.7.1.3 Safety Design Basis

The feedwater lines are designed to accommodate operational stresses, such as internal pressures, without a failure which could lead to a release of radioactivity in excess of guideline values in published regulations.

10.4.7.2 Description

See Section 9.2.6 for condensate storage and transfer system. The condensate and demineralized water system is shown in Figure 9.2-14.

10.4.7.2.1 Condensate Pumps

Two motor-driven, vertical, centrifugal condensate pumps deliver water through the steam packing exhauster condenser, air ejector, condensate demineralizer, and low-pressure feedwater heaters to the suction of the reactor feedwater pumps, with sufficient pressure to satisfy the net positive suction head requirements of the feed pumps. Minimum pump flow is ensured automatically by recirculating flow back to the condenser during low loads. The condensate pumps are vented to the main condenser. See Figure 10.4-4, Sheets 1 and 2.

10.4.7.2.2 Feedwater Heaters

The feedwater heaters are of the closed type with extraction steam in the shells and feedwater in the tubes. The feedwater heater tubes are stainless steel. The heaters are designed to accept extraction steam flows with up to 13% moisture.

Two parallel strings of heaters, each containing five low-pressure heaters and one high-pressure heater, constitute the heater cycle. Either string of the first two or the last three low-pressure heaters may be bypassed, but an individual low-pressure heater cannot be bypassed. The high-pressure heaters cannot be bypassed but may be isolated and depressurized. Extraction stop valves provide for deactivating the high-pressure heaters to reduce final feedwater temperature. A partial bypass on extraction steam side heaters had been installed to divert the increase in flow due to Extended Power Uprate to preclude unacceptable tube vibrations. All heaters are individually vented back to the main condenser, and heater drains are cascaded through the heaters to the main condenser.

10.4.7.2.3 Reactor Feedwater Pumps

Two motor-driven, centrifugal feedwater pumps deliver feedwater through the high-pressure heater and the feedwater control valves (main and/or startup), into the reactor vessel. Minimum flow through the feedwater pumps is ensured automatically by recirculating the minimum flow to the main condenser during low loads.

10.4.7.2.4 Feedwater Piping

The feedwater piping is designed to conduct water from sources outside the primary containment to the reactor vessel. General requirements of the feedwater system are covered in Section 7.7.1, "Feedwater System Control and Instrumentation." All main feedwater piping is classified according to service and locations. The materials used in piping are in accordance with the applicable design code and supplementary requirements. A diagram of the feedwater piping is shown in Figure 10.4-4.

10.4.7.2.5 Hotwell Transfer System

The hotwell transfer system provides a means of transferring condensate from the condenser hotwell through the condensate demineralizers to the condensate storage tanks without the use of the condensate pumps (see Figure 10.4-4, Sheet 1). During plant outages the condenser hotwell is used to store condensate from the torus, reactor vessel, and other systems utilizing demineralized water. The hotwell transfer pump takes a suction from the hotwell through the suction line to condensate pump [redacted] and discharges to the condensate pumps' discharge header. When the reactor plant is in operation the hotwell transfer system is isolated from the condensate system by a removable spool piece and blank flange on the suction side and a gate valve and blank flange on the discharge side of the hotwell transfer pump.

10.4.7.3 Piping Inspections

Piping was fabricated and installed to the ANSI B31.1.0 Power Piping Code, 1967 edition, with 1970 addenda for the following steam and power conversion systems: main steam, turbine cross-around, extraction steam, feedwater heater drains, feedwater (outside drywell), and condensate. Feedwater piping inside the drywell was fabricated and installed to the ANSI B31.7 Nuclear Power Piping Code, 1969 edition, with 1970 addenda.

In response to Institute of Nuclear Power Operations (INPO) Significant Operating Experience Report (SOER) Number 82-11, dual phase steam piping was inspected for evidence of erosion- corrosion. In response to INPO Significant Event Report (SER) 1-87 and NRC Information Notice 86-106, single-phase high energy water piping in the feedwater and condensate systems was inspected for erosion-corrosion. Additional information, including plans for a continuing inspection program, are given in Reference 1.

In addition, due to the increase in feed flowrate due to Extended Power Uprate, vibration monitoring was performed to assure that unacceptable flow induced vibrations were not present (Reference Section 14.2).

REFERENCES FOR SECTION 10.4

1. Letter from W. Rothert, Iowa Electric, to A. B. Davis, NRC, Subject: Response to NRC Bulletin 87-01, Thinning of Pipe Walls in Nuclear Power Plants, dated September 11, 1987.

2. Design Change Package 1518, Feedwater Control Enhancements

2016-002 3. AR 01980346 Assignment 4 – SL-012521 flooding evaluation