Rec'd w/ ltr dtd 11-8-74

50-237/249/254/265

Dresden Special Report No. 41

Quad Cities Special Report No. 16

REACTOR BUILDING CRANE

AND

CASK YOKE ASSEMBLY MODIFICATIONS

AEC Dockets

50-237
50-249
50-254
50-265

Commonwealth Edison Company

October, 1974

11572

TABLE OF CONTENTS

1.0 INTRODUCTION

To preclude the possibility of dropping a spent fuel cask during handling operations over the spent fuel pool, modifications will be made to the existing Reactor Building Crane and Cask Yoke Assembly. Crane modifications shall consist of a new trolley utilizing a dual-load path hoisting system for the main hoist. This system will be available to prevent all postulated credible single-component failures over the entire supporting load path; from the cask supporting system through the redundant cask lifting yoke, the redundant hook, the dual-load path hoisting system to the crane bridge structure.

2.0 REACTOR BUILDING CRANE

2.1 Description of Modifications

The existing reactor building crane is a single trolley, overhead electrical traveling-type, with both a main hoist and auxiliary hoist. The existing trolley will be replaced by a new trolley containing a dual-load path hoist system for the main hoist and a standard arrangement for the auxiliary hoist. Design requirements are as follows:

A. The entire crane trolley and existing bridge girders will be reviewed for the revised trolley weights in conjunction with the lifted load requirements to establish compliance with CMAA #70 permissible stress ranges. Calculations to be performed by Whiting Corporation will also determine the maximum vertical loadings with impact for the bridge girders, as defined in Section 70-3 of CMAA #70. Design values for operation conditions plus seismic will be based on AICS code requirements for OBE and 90% of the minimum yield strength of the material used for DBE. The exact values will be provided by Whiting Corporation with the Component Failure Analysis for this submittal at a later date.

B. The main hoist capacity will be 125 tons and the auxiliary hoist capacity will be 5 tons. Crane stepless variable speeds (maximum) have been established as follows:

Bridge	—	50 fpm at full load
Trolley	—	33 fpm at full load
Main Hoist	—	5.75 fpm at full load
		17.25 fpm at no load
Auxiliary Hoist	—	30 fpm at full load
		90 fpm at no load

The new trolley with its dual load path hoist system weighs 116,000 lbs. which is a 25,000 lbs. increase over the weight of the existing trolley. All calculations and analysis will take this weight increase into account. The existing bridge crane and associated crane runway support structures will be evaluated to determine if any revisions will be required for handling the new trolley with its increased weight. All analyses performed relative to the cask handling procedures will base load values on the details of the National Lead 10/24 Cask. Should larger casks be placed into service, compatibility with the stipulated safety requirements will be established.

C. All crane parts shall equal or exceed design criteria as established by CMAA Specification #70, and shall be compatible with the requirements of the Occupational Safety and Health Act of 1970 and as amended in 1971, as well as ANSI B 30.2.0.

1. Motors — General Electric, open ball bearing, drip proof, solid frame, shunt wound, crane type motors, with Class B non-hydroscopic insulation, rated 30 minutes. Motors will comply with NEMA standards. Auxiliary hoist motor to be gearhead type.
2. Controllers — Existing Maxspeed 320 system for hoists, with existing transfer switch for auxiliary hoist control from main hoist. Existing Maxspeed 100 for trolley and bridge controls.
3. Switchboard — The existing units have been reused.
4. Magnetic Brakes — Two (2) General Electric IC-9528 A-103 16 inch DC magnet operated electric shoe type brakes for main hoist. Two (2) IC-9528 A-102 13 inch DC magnet operated electric shoe type brakes for auxiliary hoist.
5. Trolley Type — Four (4) motor type with welded steel frame; center to center of trolley rails shall be 17'-0".
6. Trolley Drive — Enclosed speed reducer type plus an enclosed Abart speed reducer located between motor and trolley drive.
7. Wheels — 27 inch diameter fabricated from rolled steel rim toughened material.
8. Drum — 58 inch diameter fabricated from steel materials for main hoist. 21 inch diameter fabricated from stainless steel for auxiliary hoist.

9. Hoist Ropes — Main hoist shall consist of 12 parts 1-1/4 inch diameter Monitor AAA type I.W.R.C. Auxiliary hoist shall consist of 1 part 7/8 inch diameter A 304 stainless steel with I.W.R.C. Main hoist ropes attached to a specially damped equalizer assembly with unbalanced condition limit switch cut-offs.
10. Limit Switch — Weight type control circuit switch plus screw type for upper and lower hoist limits and centrifugal overspeed switch for lowering.
11. Load Block — Dual load path type with bronze bushed sheaves for main load block and with forged steel main hook. Stainless steel yoke and hook for auxiliary hoist.
12. Trolley Brakes — One (1) IC-9516-160 and one (1) IC-9516-161 DC solenoid operated electric shoe type brakes.
13. Collectors — Double set of Insul - 8 shoe type.
14. Stops — Four (4) Spring type trolley bumpers.
15. Main Hoist Inching Drive and Controls — AC squirrel cage continuous duty 5HP motor with independent controls.
16. Load Sensing readout with high and low limit cut-offs.

D. Electrical power as presently provided for the existing Reactor Building Crane will be adequate for all operational requirements of the cask handling system.

2.2 Dual Load Path Hoist System

The hoist system will utilize a dual load path concept through the hoist gear train, the reeving system, and the hoist load block, along with restraints at critical points to provide load retention and a minimization of uncontrolled motions of the load upon failure of any single hoist component. The system includes two complete gear trains connecting the hoist motor to the single hoist drum. Each gear train is designed to accept full motor torque at rated load capacity in accordance with CMAA #70 standards, along with peak strength ratings adequate to absorb shock loadings (later described) within the yield strength of the component materials. Separate motor brakes are included with wheels mounted on an extension of each motor pinion input shaft. The hoist drum and its shafts and bearings are designed to accept the forces and moments produced by full load tension on either half of its grooving or reeving and, in addition, is provided with close clearance retainers at its hubs to support the drum and prevent loss of pinion mesh in case of shaft or bearing failure at either or both ends of the drum.

Reeving (see Figure 1) consists of 12 parts of rope sized as commercially available to provide a minimum static factor of safety of 7.798, with all parts of rope effective, and based on the ultimate rope strength and static rated load

as defined by CMAA #70 specifications. This rope is furnished as two separate pieces, each of which is fastened at one end to the drum in conventional manner, reeved through the upper and lower blocks of the trolley as described below, and the other end adjustably attached to a specially damped equalizer assembly. This equalizer assembly is also provided with special retainers to assure its continued support of the load in case of pivot pin failure. Hydraulic dampers and mechanical stops are also provided on this assembly to define its maximum rate and extent of rotation about its pivot pin in either direction. If either piece of rope should fail, the equalizer assembly dampens the forces developed in the remaining rope caused by its increase in stress in order to continue support of the load. This damping system, however, does not interfere with the normally small and slow oscillations of the equalizer during rope tension equalizing functions while all parts of rope are effectively supporting the load. A special limit switch system is also supplied on this equalizer assembly which will stop the crane and provide a warning to the operator if unequal rope stretch or other causes have moved either end of the assembly to the point where insufficient travel exists to assure equal load sharing on both sets of rope. This signal indicates that an adjustment of either or both rope anchors at the equalizer should be made prior to critical load handling.

Upper and lower block sheaves are a minimum of 24 rope diameters and are uniquely arranged in upper and lower blocks so that the total sustaining force of all effective ropes remains nearly coaxial and concentric with the vertical axis of the hook shanks whether either or both pieces of rope are supporting the load. Each sheave in both the upper and lower block is also provided with vertical and lateral restraints that will assure continued rope tension in its rope in case of sheave or bearing failures.

Figures 1 and 2 indicate the new vs. conventional reeving with their associated fleet angles. Inspection of these figures indicates possible formation of reverse bends between the drum and the first sheave only. Reverse bends are related to fatigue design considerations. The term itself implies cyclic stresses varying from tension to compression at the same point on the periphery of the rope. Included in the Appendix is a letter from the Whiting Corporation, Crane Division, in which the following two points are further discussed:

1. Stress reversals could occur between the drum and the first sheave only. All other rope bends do not result in stress reversals. Please note that this comment is not peculiar to a redundant design crane and would apply equally as well for conventional reeving. In essence, there is no difference between redundant reeving and conventional reeving when considering reverse bends.

2. Wire rope is unique in the consideration of stress reversals in that reversals will not occur if the distance between the point of tangency exceeds one or two lays of rope. As shown (Figure 2), our minimum distance exceeds nine lays. It can be concluded, therefore, that reverse bends will not occur.

The fleet angles on the dual-path reeving system are actually less than those used on the original crane conventional hoist system (see Figures 1 and 2). There are two areas of concern with respect to proper design for fleet angles:

1. The fleet angle influence on the life of the rope is reflected by abrasion. The abrasion occurs from rope to rope on the drum or at the entry of the rope into a sheave.
2. The fleet angles influence on the tendency to properly spool onto the drum or to remain seated in the rope sheave throat.

The documentation for the Whiting standard design of 1" in 12" allowable fleet angles has been in existence since 1955. This standard of 1" in 12" also existed prior to that time. Their history encompasses more than 10,000 crane applications including the existing trolley for the Quad Cities and Dresden Stations, and does not reflect any particular problems with respect to use of a 1" in 12" fleet angle. Moreover, the limited usage of the main hoist does not demand the more

conservative fleet angle requirements of AISE Standard No. 6. To impose such limits as are suggested in that standard would radically alter the design of this trolley, with the strong possibility of making a backfit to the existing Reactor Building impossible.

Attached are reeving diagram Figure 1 which shows one-half the reeving of the dual path design and Figure 2 which is a standard drawing of the conventional 12 part reeving used on the existing trolleys. The dual path reeving drawing (Figure 1) has been marked to indicate the fleet angles occurring at each sheave and the drum for the block in the high and low position. The sheave angles shown are with the block at high position and consequently are the worst case. The conventional reeving diagram (Figure 2) shows the fleet angle from the drum with the block at high and low position and the maximum fleet angles experienced from a running sheave. A review of the two diagrams will show that the dual path reeving utilizes smaller fleet angles than those of the existing trolley. The maximum fleet angle occurring at the drum is 3.58° and diminishes rapidly as the block is lowered. It will go to zero degrees in the first few revolutions of the drum and increase to a maximum 2.29° at the low position.

The consideration for spooling and setting in the sheave throat is demonstrated by experience and enhanced by the fact that the dual path reeving is less severe than can be

found in conventional reeved cranes. In any event, the crane is equipped with an alarm system, i.e., the rotating equalizer bar, which will recognize improper spooling and deactivate the crane. The planned crane inspection and maintenance procedure discussed in a later section is an additional safety measure to provide for the detection of abrasive wear. Abrasive considerations in a powerhouse crane are of very little importance due to the limited use of the crane relative to an industrial or a duty cycle crane which is designed on the same basis. Consequently, it is concluded that the design of the fleet angles in this dual path reeving should be of less concern than that of a conventionally reeved crane and is sufficiently conservative to preclude enhanced rope wear.

A minimum factor of safety of 7 is required in the hoisting cable so that the factor of safety under the shock of load transfer will remain conservatively above the yield strength of the rope. If all ropes are effectively supporting the load, it is safe to assume that the tension is essentially equal in all parts; however, if under this condition, one rope should fail, the strain in the remaining rope must be doubled in order to continue support of the load. This change in rope strain must also be accompanied by a proportionate change in rope stress. The change in strain of the remaining rope allows a downward acceleration of the load which for the first period of oscillation requires an

additional increase in rope strain of as much as the initial change in strain which accelerated the load in order to counter-balance its gain in kinetic energy and produce zero downward velocity. This means that the peak stress of the first oscillation would be three times the normal rope stress with all ropes effective or a factor of safety reduced to 2.33:1 at the peak. The above logic, however, does not include the further damping of the equalizer sheave assembly and the constants of the structural portions of the trolley, bridge, and runway which all serve to reduce the downward acceleration of the load to less than 1G with a corresponding reduction in the strain necessary to provide load deceleration.

The load block provides a dual concentric pair of load connecting devices to carry the load into and through the block housing and sheaves, either of which has the ability to sustain the full load, while providing load rotation capabilities normally found in crane blocks. The normal load path is through the lower connector which consists of an "eye" similar to that found in the conventional crane hook, and capable of connection to any existing handling devices having a compatible design. The upper device consists of a sister crane hook also capable of supporting the full load which will accommodate primary and secondary load yokes. The block design is such that either hook can be rotated easily relative to the other when in an unloaded condition. When full load is being shared by the two hooks, rotation is still possible

but is designed to be difficult to prevent indiscriminate relative rotation. This is accomplished by using an anti-friction thrust bearing on the "sister" type hook with a bronze thrust bearing on the "eye" type hook. The nominal design clearance between the outer face of the "eye" connector shank and the inner face or bore of the "sister" hook shank is 1/16 inch. This is intentional to avoid angular displacements of the two hooks. Sufficient clearance is left for the normal rotational movements expected. The two hooks can be disassembled for periodic inspection and cleaning if necessary. Maintenance procedures will include this, as well as providing for the application of suitable silicone lubricants to coat the hidden surfaces for smooth operation and corrosion resistance.

The complete system allows for the careful continued operation of the hoist on the remaining load path after the failure of any single component as soon as that component is cleared. This capacity will avoid any extended suspension of operation during a critical lift should complete repairs be required.

2.3 Control System

A. Pushbutton Control

Pushbuttons to operate the main hoist are provided in a pendent control station. The station also contains pushbuttons for controlling the auxiliary

hoist, the trolley, and the bridge, in addition to main disconnect functions.

The present pendent station unit has the following control switches:

1 - Single speed button for "pendent station up"

1 - Stepless unit — bridge forward and reverse

1 - Stepless unit — trolley forward and reverse

1 - Stepless unit — hoist up and down

1 - Key lock selector marked "normal-restricted path"

1 - Crane lights on-off selector

1 - Bell button

1 - Selector switch for "main-auxiliary" hoists

1 - Start-stop pushbutton

1 - Cab floor selector

All in MEMA (1) pendent enclosures.

The above buttons are actuated through a "cab-floor" selector switch located in the pendent. The selector also provides transfer from hydraulic bridge braking in the cab-operated mode to General Electric IC-9528 A-100 8" DC magnetic braking in the floor-operated mode.

Alterations to the pendent station control system include the addition of a "Normal-Restricted" mode switch in a blank space available in the present

pendent enclosure. The selector switch will restrict the load path of all crane motions to the critical path required during fuel cask handling operation.

B. Traverse Motion Controls

The bridge and trolley controls are stepless from the cab master or the pendent. Plugging can be utilized since the controls have been provided with current limiting devices. The bridge and trolley brakes have been provided with a delay signal from the armature voltage to yield a soft stopping characteristic. The controls provided for all motions are more than adequate for the intended use and will provide safe, smooth operation of the crane. Both trolley and bridge use Maxspeed 100 adjustable voltage DC type control. The drive motors are shunt wound DC crane hoist type rated at 30 minutes. This control inherently has built into it a very fine inching and slow speed characteristic. If the motor is essentially "stalled" providing little or no movement, the operating time must be limited to approximately 90 seconds. This is an unrealistic state, however, in that some inching speed is required for movement of the load. As inching speed is approaching 10% of full load speed, the time this speed can be

maintained increases rapidly to where essentially no time limitations are imposed up to the 30 minute rating of the motor.

C. Inching Drive

An inching drive is provided on the dual path hoist as a gear motor with a through shaft, chain driven clutch mounted along the main motor shafts coupling both hoist input pinions (see Figure 3). Since the main motor is a DC Maxspeed unit, the inching motor is an AC squirrel cage continuous duty motor to provide regenerative overspeed protection. We have provided separate controllers with electrical interlocking to prevent possible simultaneous operation of both motors. Inching drive selection and operation is provided at crane cab only, and not at the pendent station to avoid a cumbersome pendent.

D. Equalizer Beam Limit Switch

The prime function of the equalizer beam is to assure that under normal operation each rope takes an equal share of the load. This equal sharing continues up until the point that the beam contacts its mechanical end stops. At the same time, the limit switch signal system is brought into play preventing further operation until inspection and adjustment or other corrective action is taken.

The limit switch signal system on the equalizer beam of the hoist includes a signal which will drop out the main disconnect of the crane, thereby rendering the crane completely inoperative until rope adjustments have been completed. This system includes an administrative key lock by-pass in the crane cab in order to provide possible further operation of the bridge and trolley motions only after a rope failure, which would also trip the equalizer limit switch system. Additional bridge conductors and trolley collectors are also provided to furnish control signal from the equalizer to the bridge mounted disconnect switch.

E. Hoist Brakes

(1) In conformance to CMAA #70 specifications, both the main and auxiliary hoisting units have power control braking as well as two holding brakes. Each holding brake exceeds the required CMAA #70 minimum of 100% torque in relation to motor torque at the point of application by providing DC magnet operated electric shoe type brakes having a max-torque rating of 200% of motor torque. Within the main hoist unit, a dual load path is also employed as described in Section 2.2, wherein either load path utilizes the two holding brakes required by CMAA #70 (see Figure 4). Figures 4

and 5 demonstrate that the design has two brakes attached to the load at all times. Figure 3 shows the torque path from each brake to the cable drum which, in turn, is connected to the load. Figure 5 shows the torque path of each brake in the event of a hypothetical failure in the gear train.

The position of the failure is purely arbitrary and can occur at any point in the dark line which schematically represents the torque path. One exception to the above would be the occurrence of the failure at the brake itself, which includes the shafting mounting the brake. However, the second brake provides redundancy for the failure of the first one.

The brakes incorporated are General Electric D.C. magnetic shoe brakes. Their design and history are well established. The circuitry is such that the setting of the two brakes does not occur simultaneously. A resistor is installed in the safety brake circuit to delay the discharge of the magnet and, consequently, the setting of the brake. The delay time is adjustable by the sizing of the resistor and will be less than a second. The time delay is necessary in that harsh braking

due to oversized brakes can have detrimental consequences on a hoist design. An excessively high level of braking torque can introduce stress levels in the high speed shaft connections which would be experienced only during the braking cycle and introduce a stress situation that would otherwise not exist.

We have reviewed the present design which is limited to the space requirements established by the existing bridge, and have concluded that we do not have sufficient space to accept the installation of four brakes. Concurrently, it is also our opinion that the use of four brakes instead of two would simply complicate the maintenance, rendering the crane more subject to personnel error with the potential consequences of harsh stopping conditions introducing shaft stresses, which would be better avoided.

(2) A review of the hoist brakes arrangement design has indicated the following considerations be analyzed:

a. Overtorque due to failure of drive motors and controls.

b. Effects of failure of holding brakes.

Our analysis of the effects of an overtorque failure has resulted in the following considerations.

The design of the hoist system utilizes DC motors and controls. The motor torque output is based on the external demand. The control circuitry is designed to establish the rate at which the external torque demand is supplied and also to limit the magnitude of the torque available from the motor. Because of this characteristic, a failure of the control circuitry alone would not create excessive motor torques; external influences such as a hook overload or failed holding brakes must be present.

In the circumstances of hook overload, the hoisting system is provided with a load sensing device which, in turn, is backed up by a motor current limiting device which will limit the motor torque to approximately 150% of its full load rating. All system components are adequate to resist the loadings created under this situation. The holding brakes are electrically released and spring set, and the consequence of any form of failure is that the brakes fail-safe to the load holding position. If one or

both of the brakes should fail to open, the motor will stall and kick-out on the overloads. The corresponding stalled torque of the motor will be imposed on the high speed shaft connecting the motor to the brakes, only. Considering the fact that these components are designed to a minimum safety factor of 5 for the total load (safety factor of 10 for shared loads), the stalled torque will be no problem. All other components in the gear train, reeving, etc., will not experience any additional loading due to the situation.

(3) With respect to a malfunction of the control braking means, our investigation of our system has indicated the following.

The Maxspeed 320 system includes regenerative braking at the DC motor as a means of control. The circuit also includes a device which will detect loss of regenerative braking capability. Should this occur, the holding brakes will automatically set, thereby stopping the crane hoisting functions. An inching drive is available to lower load, complete hoisting operation to relieve crane of its load into a standby condition for possible repair.

G. Trolley Drive Brakes

In conformance to the CMAA #70 specification, the trolley drive is provided with a brake having a torque rating of approximately 50% that of the trolley motor. In addition, a second similar type brake is also used. One is provided to stop the motor rotor energy and is mounted on a motor shaft extension. The other is mounted outboard of the trolley drive gear case. It provides a braking means to the trolley momentum. Each brake can stop the trolley in the event of failure of the other brake and, therefore, each brake is a redundant brake for the other. Both brakes are DC solenoid operated electric shoe type. One trolley brake is delayed by a timing circuit.

The trolley drive control provides for regenerative electrical braking and controlled stepless acceleration.

3.0 TEST PROGRAM

3.1 Component Adequacy

The trolley design provides for a component failure analysis which has been prepared by the crane vendor. A listing of all components within the load path is shown and is as follows. While the hoist system design is predicated upon a dual-load path, some items within the path cannot be made redundant. Where full redundant features are not feasible or are impractical or impossible, consideration has been given to retain or capture a failed single element to avoid loss of load. Increased design safety factors are used in all these non-redundant areas. The new redundant hoisting system and components are designed in accordance with CMAA #70. The trolley is designed in accordance with CMAA #70, as well as the mandatory requirements of OSHA.

Within the dual-load path, the design criteria is such that all dual elements will comply with CMAA #70 allowable stresses except for the hoisting scope, which is governed by more stringent job specification criteria. All other single element components have been designed to a minimum factor of safety of 7.5 based on the ultimate strength of the material. The normal design criteria in the CMAA #70 considers the ultimate strength rather than the yield strength. While all components are, of course, designed within the yield strength vs. the ultimate strength, no basis or standard of comparison

for safety factors at yield vs. safety factors at ultimate are available. In many of the machinery items, the relative standards of comparison are found within other codes or standards such as AGMA for gear design which primarily relates to durability in addition to strength. The sister hook and eye connector for the hoisting system is fabricated and finished machined from forging quality steel slabs. The hook shall be tested for cracks, flaws or other defects by both ultrasonic and magnetic particle tests. Certified mill test certifications have been provided for ropes, hook slabs, and structural members carrying the hook loadings to the bridge rails.

3.2 Component Failure Analysis

A component failure analysis is currently being prepared by the Whiting Corporation for submittal at a later date. The analysis which has been referred to in the text of this submittal will evaluate the final engineering design and present values for each item relative to the crane safety. Calculations will provide vertical impacts with loading values, as defined in Section 70-3 of CMAA #70, and stress levels of operating conditions under seismic considerations based on AISC code requirements for OBE and DBE. This analysis will also discuss the safety factors, redundancy, and failure protection provided, based on the final engineering design.

3.3 Quality Assurance

A detailed series of field operating and lifting tests will be established to demonstrate satisfactory functional and operating capability of the revised crane and trolley components. Test procedures will also include the measurement of crane clearances, crane operating limits, as well as visual inspection of stressed crane parts. All testing will be done to meet the requirements of ANSI B30.2.0 - 1967 code plus additional requirements as described herein.

The following summarizes the testing to be performed relative to the crane's ability to handle and operate with its rated load.

A. Shop Testing

1. Shop testing shall consist of general running tests of all motors, shafting and gearing in accordance with ANSI B30.2.0 - 1967 code, and includes correction of all noted deficiencies prior to shipment of parts to site. Each motor shall also be given a routine factory test as defined in NEMA MG1.
2. Rope Tests: Pull tests of hoisting cables will be performed by the rope vendor. All ropes shall be manufactured without splices throughout its cable length. Sample pieces from each rope used shall be destructively broken to determine its ultimate strength.

3. Hook and Eye: Each hook shall be proof load tested by a total vertically applied uniform load of 200 percent of its rated capacity. After completion of this test, the hook shall be given a magnetic particle inspection and a recheck of its dimensions.
4. Trolley Welds: Visual inspection with weld size gage as well as magnetic particle inspection for selected welds to be noted on the shop drawings.
5. Gearing with associated parts shall be magnetic particle tested.

B. Field Testing

1. No Load Test

Prior to initial crane usage, and at least annually, the crane will be subject to a complete no-load run-through testing program consisting of, but not limited to the items listed below. Operations shall be performed from each of the two (2) control points, i.e., from the pendant control station and the crane bridge control cab.

a. Operate the bridge, trolley and hoist throughout the entire range of their travel. Clearance requirements will be reviewed during this testing sequence and corrected if necessary.

b. Operate all brakes to assure that they are properly adjusted.

c. Set upper and lower hoist limit switches; after limit switches have been set, repeat the operation to assure proper switch response.

d. Check for proper contact of trolley and runway current collectors and conductors throughout the entire length of travel.

e. Check for proper engagement of bridge and trolley with the stops at the ends of the girder.

f. With hook at its extreme lower limit of of travel, check to see that at least two full turns of rope remain on drum.

g. With the hook at the extreme upper limit of travel, check to see that there is no overlapping of rope on drum.

h. Accurately measure the no load speeds for all crane motions at each control point.

i. Check all limit switches for proper response when procedural controls for cask handling operation are in effect.

2. Load Tests

Initial lift with a load of 25 tons to 35 tons on main hoist, a rerun of the testing noted in 1., will be done with the following exceptions:

a. Crane clearances need not be checked.

b. Crane stop engagement need not be checked.

c. Extent of rope on drum need not be reviewed.

d. Limit switch settings for cask handling procedural controls need not be reviewed.

Overload Test

25% overload test (125 ton main hoist). This test will be performed with the crane hoist system extended to the 595'-0" level (grade floor) for Quad Cities Station and to the 517'-6" level for Dresden Station and the lifting of the load some 3-4 feet above this floor, making visual inspection of all crane parts and checking that no undue straining is evident while holding the load at this height. No crane movements, other than the initial vertical lift, will be performed during this test.

Rated Load Test

100% load test of main and auxiliary hoists shall then be undertaken, checking the following:

a. Test hoist brakes to ascertain that the crane can stop and hold the load.

b. Hoist speeds shall be checked.

c. Upper and lower limit switches shall be checked.

d. Trolley and bridge brakes shall be checked for satisfactory operation under full load.

e. Check operation of the hoist, trolley and bridge throughout the entire travel length and vertical lift.

f. All movements of the crane, with its pendant controls and associated limit switches with respect to the procedureal operation of the crane during cask handling operations shall be checked.

3. Dual-Load Path Hoist Test

With 100% load on crane main hoist, and main hoist reeving fully extended through hatch to grade level, rundant features of hoisting mechanisms shall be checked as follows:

a. Set balance beam such that the entire main hoist load is carried by 1/2 the reeving.

b. Lift load 3 to 4 feet above 595'-0" level for Quad Cities and 517'-6" for Dresden and hold.

c. Visually check entire crane for signs of undue straining.

d. Lower load to floor and repeat the above testing program with other portion of crane reeving.

With 100% load on crane main hoist, with main hoist reeving fully extended through hatch to grade level, balance beam cutoff limit switches shall be checked for each side of redundant reeving to determine that switches cut off all crane operations when balance beam bottoms out.

Testing criteria will be established prior to the actual testing program being carried out at the QCNS and DNS sites. A program shall be established with the coordination of the crane manufacturer (Whiting Corporation) and provisions have been made to have all testing performed with the supervision of the crane manufacturer.

4.0 SAFETY FEATURES

4.1 Description of Load Carrying Path

A thorough, careful, and practical analysis was made of the hoisting system in view of component failure. In the event of any load path component malfunctioning, personnel will first investigate the nature of the malfunction. The design intent is to first consider total system safety and, second, to allow for continued operation where possible under an emergency type condition. After inspection of a malfunction, continued operation may either progress or a hold may be necessary to clear any possible jamming in the load path.

Considering the design safety intent, all members of the load bearing hoist path will have a minimum safety factor of 5:1 and in many instances considerably greater than 5:1. Wherever feasible, dual element protection is provided or a means is provided to capture a failed component in order to prevent an uncontrolled descent of the load.

Beginning with the hook block, failure of either hook would allow operation to continue. The block is arranged such that if we follow the load path from the hooks through the hook nut and bearings to the swivels, the next possible point of failure is the swivel. While this could possibly render the hoist inoperative, no loss of load would occur since the block construction would capture the failed components. To reduce the likelihood of a suspended operation at this point, the swivel has a safety factor of at least 8:1 on ultimate.

The load path next continues to the sheaves within the load block. The failure of any given sheave would not result in a loss of load and the system could continue to operate by resorting to half the reeving.

The load path continues to the cable itself, and with a redundant reeving system, a failure of either of the two cables would not render the system inoperable if the failed cable is removed. In fact, considering the nature of a cable failure, it is quite possible that because of the resulting stretch due to plastic strain, or due to individual cable strand failure, the load would transfer to the other set of cables, resulting in a cessation of the failure of the original set of cables. The consequence of this may be that continued operation could result without any correction of the failed cable. The elastic stretch of rope under shock load (transition impact) is approximately 2/3 inch for each 10 feet of hook extension.

The load path next continues to the upper sheave nest and equalizer system also containing a load cell system. Here again, a failure of the load cells will not render the system inoperable and positive retention capacity has been provided.

The same applies for the sheaves or sheave pins. Failure in either of these two systems would result in the use of half the reeving. The equalizer system follows the same pattern. The failure of the sheave pin or the equalizer bar pin would

not result in loss of load and the system would not be rendered inoperable; the load would again be carried on one-half the reeving. This reflects efforts to present a safe system and a system which minimizes the shock in the load transfer. Both ends of the separate reeving are attached to the equalizer bar. Loss of the load on either of the two rope systems would result in rotation of the equalizer bar. This rotation would occur at a relatively slow velocity because of the hydraulic dampers imposed.

The load path continues up to the drum (see Figure 3) which is a single element in the design. A failure at the middle of the drum could result in the loss of the load. A review of the geometry would show that the drum is 58 inches in diameter and less than 17 feet long. This depth to length configuration falls far short of the requirements to consider it as a beam in bending. The stress analysis is generally a local stress consideration and, in turn, the stresses produced are primarily in compression. These conditions reduce the probability of crack propagation which would be the primary concern for failure of a drum. The stress level employed for this particular case is lower than those used in a conventional design (safety factor 7.5 vs. 5). Furthermore, there has been no reported experience concerning a failure of the drum at the centerline.

The other single element aspect of the design is the drum shafts located at the ends of the drums. Provisions have been made to capture the drum in the event of a failure of the drum shafts. The retention system is such that operation could be continued if the drum shaft were to fail, at least in the lowering direction.

The load path continues through either of the two gear boxes to the input shafts and on into the main hoist motor (see Figures 4 and 5). Either of the two gear boxes are designed to accommodate the entire load. A failure in either of the gear boxes would not render the system inoperative. The obstruction that results from the failure would have to be removed, but upon removal, the system would be capable of full hoisting and lowering. A failure of the motor would, of course, render the system inoperable. A separate hoist inching mechanism has been provided as an alternate means of operation should the main hoist motor fail (see Section 2.3.C.). There are two shoe brakes provided (see Paragraph 2.3.E.). In both cases, the shoe brake is fail-safe in that they set under a power loss. Should a complete power loss occur and the load must be removed from the crane, lowering can be accomplished by alternately releasing the electric shoe brake.

4.2 Lead Line Safety Factors

The following analysis identifies the tentative rope safety factors for both the Static Factor of Safety as well as the Lead Line Factor of Safety:

Rated Load Capacity = 250,000 lbs.

Block and Rope Weight Estimated = 20,500 lbs.

270,500 lbs.

Breaking Strength 1-1/4" AAA-IWRC Bright Strength = 175,800 lbs.

$$\text{Static Factor of Safety} = \frac{175{,}800 \times 12}{270{,}500} = 7.798:1$$

Lead Line Factor at 12 Parts = 0.099 with Bronze Block Sheaves

$$\text{Lead Line Safety Factor} = \frac{175{,}800}{270{,}500 \times 0.099} = 6.564:1$$

In the event of a complete single component rope failure on one-half of the reeving, operation of the cask movement may continue after removing the failed rope. It is anticipated that such a failure can be sufficiently cleared in approximately two to three hours if the trolley is over the operating floor at the time. If rope failure occurs while over the spent fuel pool or main entry hatch, an additional several hours may be required for the type of personnel scaffolding needed to reach the affected parts.

5.0 CASK

5.1 Cask Description

Commonwealth Edison Company plans to use the National Lead 10/24 spent fuel shipping cask (see Figure 6) for shipments of spent fuel from Dresden and Quad Cities Nuclear Stations. The 10/24 cask is designed to ship 24 BWR (7x7) or (8x8) irradiated fuel elements. The cask will also accommodate failed fuel elements. The total loaded cask weight with impact structures and yoke assembly is 110 tons. The overall cask dimensions for loading with impact structures are 10 feet diameter by 21 feet long. Transportation is by a special 6-axle rail car. The cask is mounted on a skid structure in a horizontal position during transport. The cask will be lifted to its vertical position utilizing the set of trunnions located below the closure head flange. The upper set of lifting rings also acts as the forward support axial restraint when the cask is in the horizontal transport position.

5.2 Cask Lifting Yoke

Figure 7 is a schematic layout of the 10/24 cask redundant lifting yoke. The yoke will be active/passive, where the redundant portions become load bearing only when there is a failure of a primary lifting component. The system will have zero-backlash so that upon failure of a primary component there will be nil-displacement load transfer to the secondary components.

A. Crane Hook/Yoke Interface

The 10/24 cask lifting device, by virtue of the primary yoke/secondary yoke system, is capable of sustaining the complete and instantaneous failure of any single stressed member without a subsequent dropping of the load. Redundant crane hook designs provide for at least two separate load paths from the cask yoke to the bottom block. The design utilizes this form of coaxial hooks such that a single assembly provides the necessary degree of operation.

All structures and attachment points are coplanar so that there is no rotation of the cask upon primary lifting device failure. There is no slack in the system, thus there is load transfer, but no impact loading due to cask downward movement. Any failure would therefore have no displacement in shifting load to the secondary system. This design will assure that under the single failure of any portion of the primary yoke system, the secondary system will prevent the cask from dropping and perform its function without exceeding the yield strength of either system.

B. Fabrication

Component fabrication will be performed to standards consistent with the service intended. All material will be certified as to chemical and physical properties. In addition, all stressed members will be ultrasonically

inspected for internal defects. Welding will be performed by qualified personnel in conformance with approved procedures. Welder and weld qualifications will be done in accordance with Section IX of the ASME code.

Stainless steel welds will be inspected using liquid penetrant techniques. Structural steel welds will be inspected using liquid penetrant or magnetic particle methods. All fabrication documentation will be collected and retained for the lifetime of the equipment. Any repairs or modifications to the equipment will be performed and inspected to standards comparable to those of the original fabrication. A visual and functional inspection of the system will be performed on at least an annual basis.

5.3 Cask Handling Safety Criteria

The yoke and trunnion design will provide for the safe retention of the cask even in the event of a single trunnion failure.

It is presently intended to move the fuel cask above the operating floor in such a manner that its base will be six inches above the floor, to assure the crane operator that the cask will clear all the curbs around the hatch openings and/or the spent fuel pool.

Due to the redundant yoke arrangement, we have minimized possible damage to the pool walls due to any postulated cask rotation in a plane perpendicular to the plane of the cask lifting yoke. The orientation of the cask trunnions will be set such that they are nearly parallel to the pool wall for both Dresden and Quad Cities Stations. A detailed cask handling procedure will be prepared prior to the operation of the dual-load path crane system.

6.0 CONSTRUCTION SCHEDULE

It is presently anticipated to erect the revised trolley, as well as dismantle and remove the existing trolley, during the period from October to December 1975 for the Dresden stations and November 1975 to January 1976 for the Quad Cities stations. This period will also be used for the complete and proper testing of all crane functions and for the operator training program.

APPENDIX

1. Figure 1 — Rope Reeving Diagram
2. Figure 2 — Typical Rope Reeving Diagram for 12 Parts of Rope
3. Figure 3 — Plan View of Trolley with Dual-Load Path Main Hoist
4. Figure 4 & Figure 5 — Block Diagram of Dual Holding Brake Connection to Hook Load
5. Figure 6 — National Lead 10/24 Cask
6. Figure 7 — Redundant Lifting Yoke
7. Figure 8 — Fuel Cask Handling Clearance Details (Sheets 1 & 2)
8. Whiting Corporation, Letter from Mr. J. P. Marchese, Manager, Crane Division

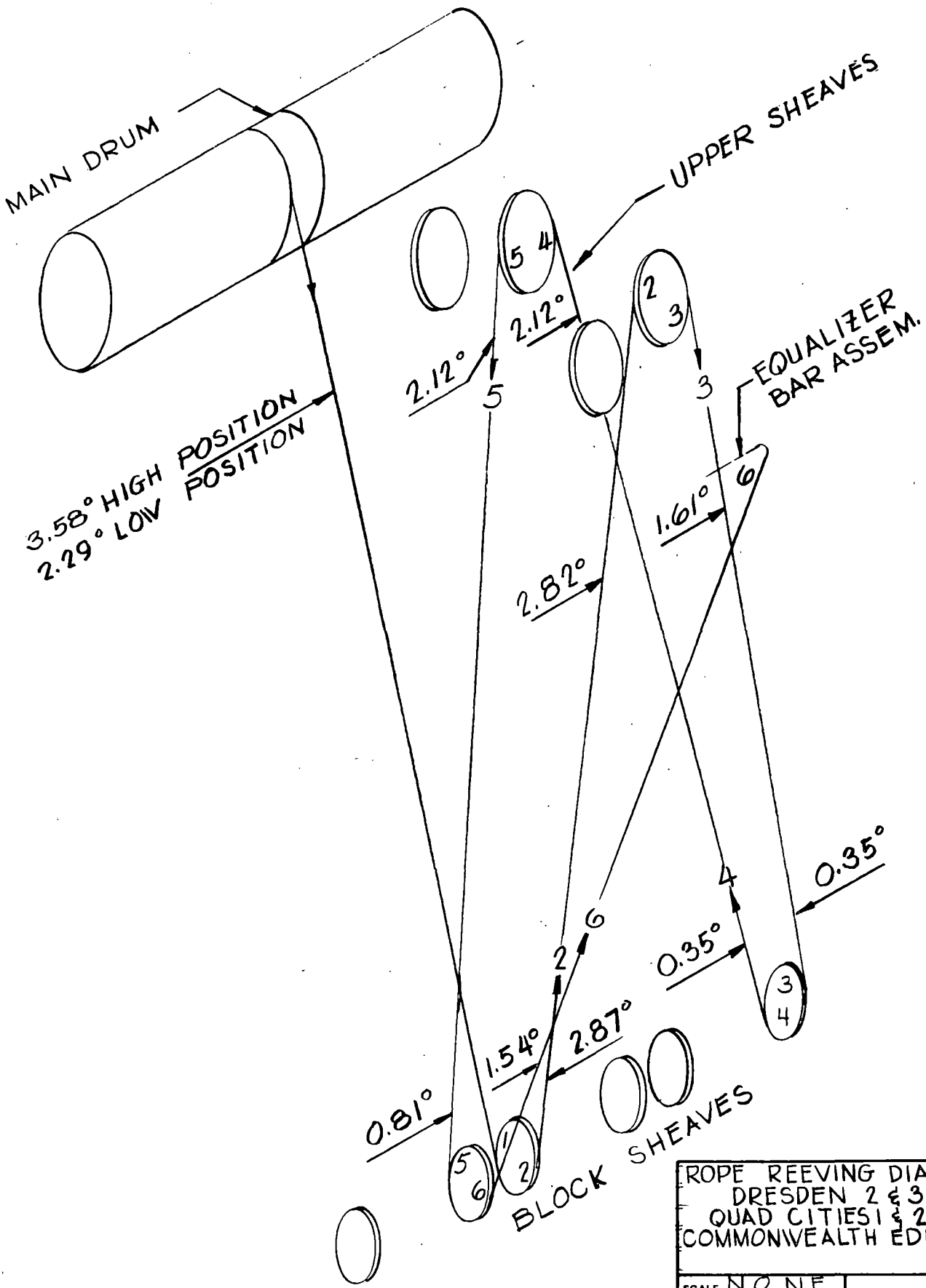

ROPE REEVING DIAGRAM
DRESDEN 2 & 3
QUAD CITIES 1 & 2
COMMONWEALTH EDISON CO.

SCALE NONE	SARGENT & LUNDY ENGINEERS CHICAGO
DRAWN A.V.L.	
CHECKED TJV	
ENGINEER TJV	
APPROVED	DRAWING NO.
JOB NO. 4716 4717	FIGURE 1

CUSHING 2-CC 4

1" 8 0 4 8

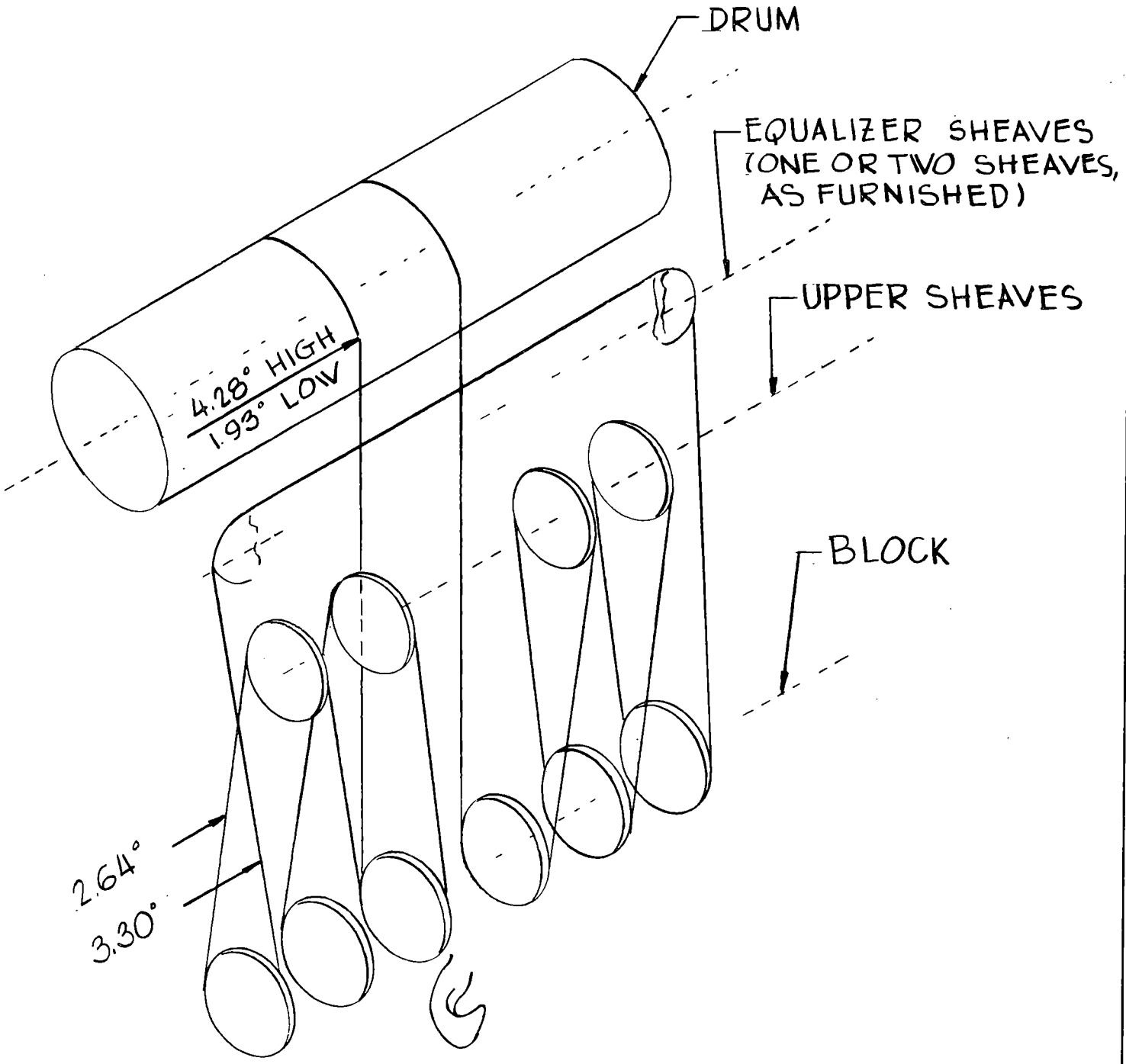

TYPICAL ROPE REEVING DIAGRAM FOR 12 PARTS OF ROPE
DRESDEN 2&3, QUAD CITIES 1&2
COMMONWEALTH EDISON CO.

SCALE NONE	SARGENT & LUNDY ENGINEERS CHICAGO
DRAWN A.V.L.	
CHECKED TJV	
ENGINEER TJV	
APPROVED	DRAWING NO.
JOB NO. 4716 4717	FIGURE 2

CUSHING 2-CC 4

1/8" 0 4 8

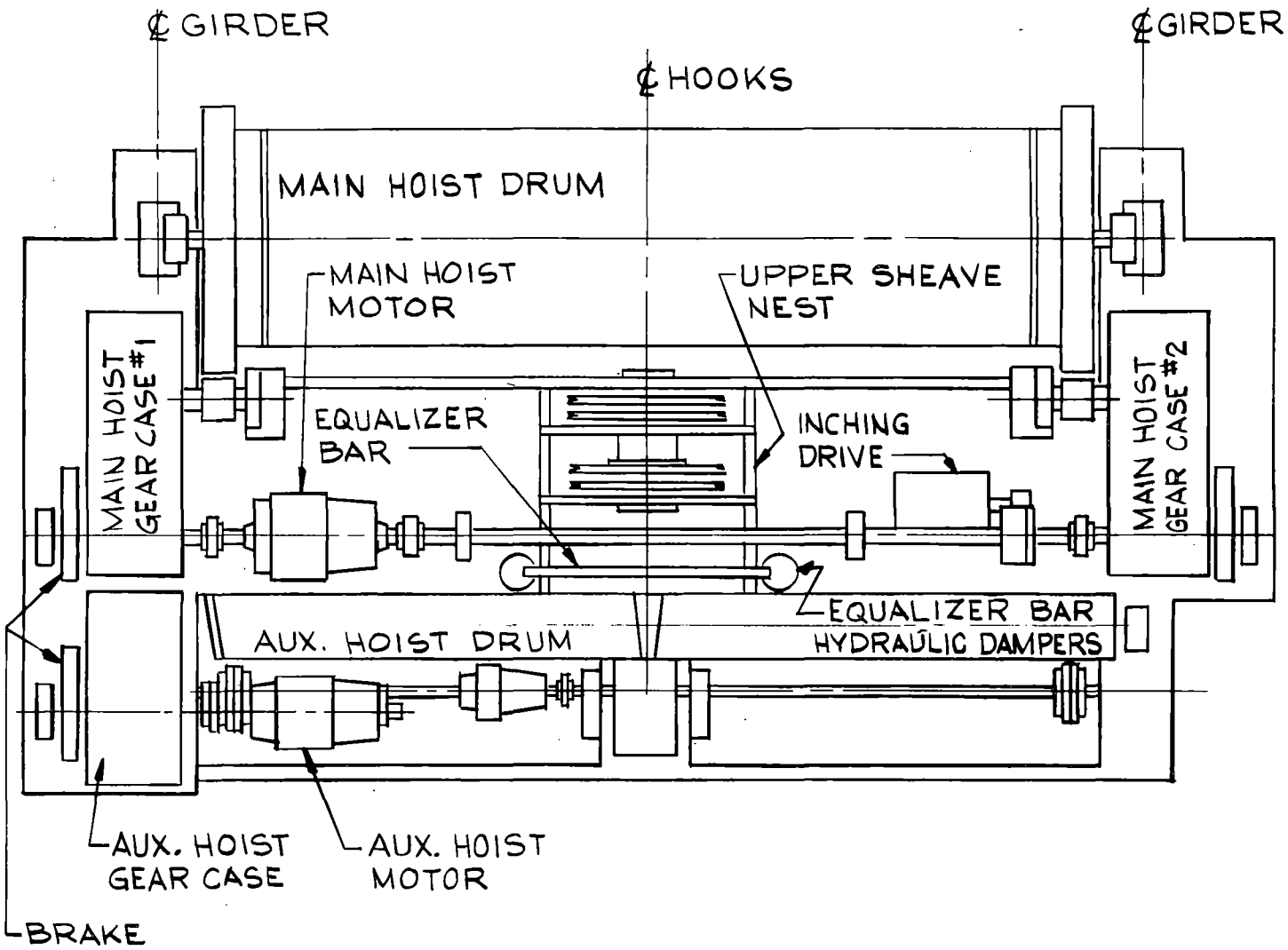

PLAN VIEW OF TROLLEY

WITH DUAL LOAD PATH MAIN HOIST

PLAN VIEW OF TROLLEY WITH DUAL LOAD PATH MAIN HOIST DRESDEN 2&3, QUAD CITIES 1&2 COMMONWEALTH EDISON CO.	
SCALE NONE DRAWN F.A. SALGADO CHECKED TJV ENGINEER TJV	SARGENT & LUNDY ENGINEERS CHICAGO
APPROVED	DRAWING NO.
JOB NO. 4716 4717	FIG. 3

CUSHING 2-CC 4

1" 8 0 4 8

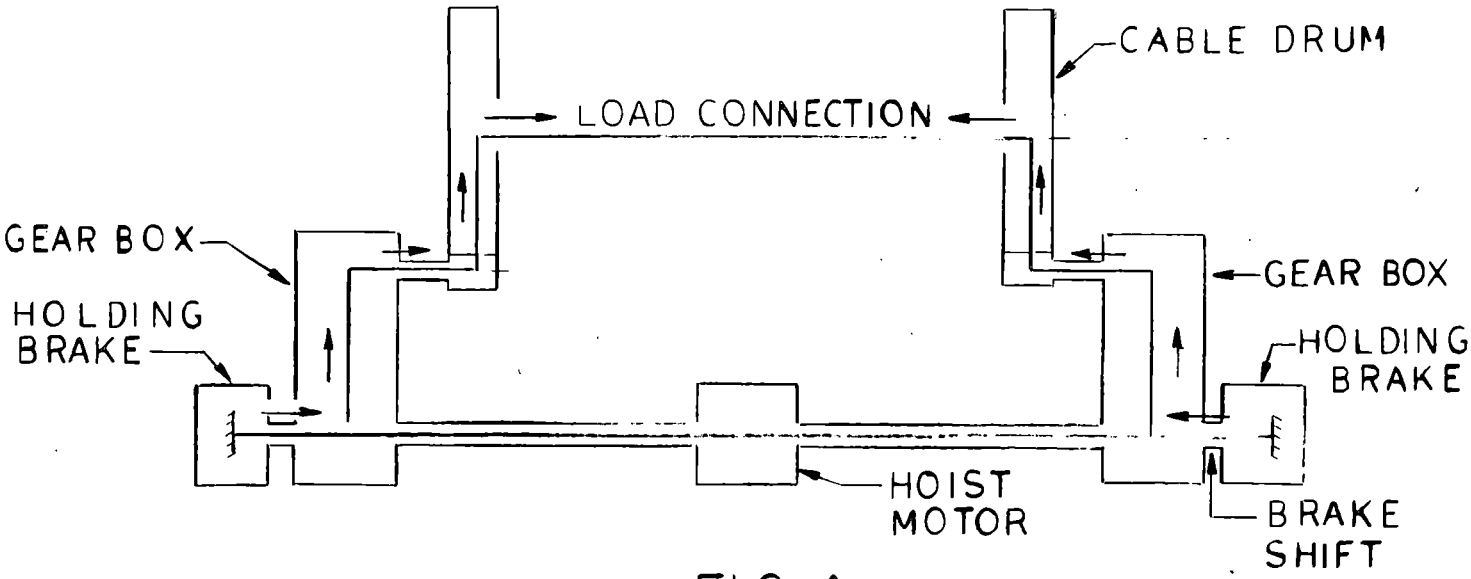

FIG. 4

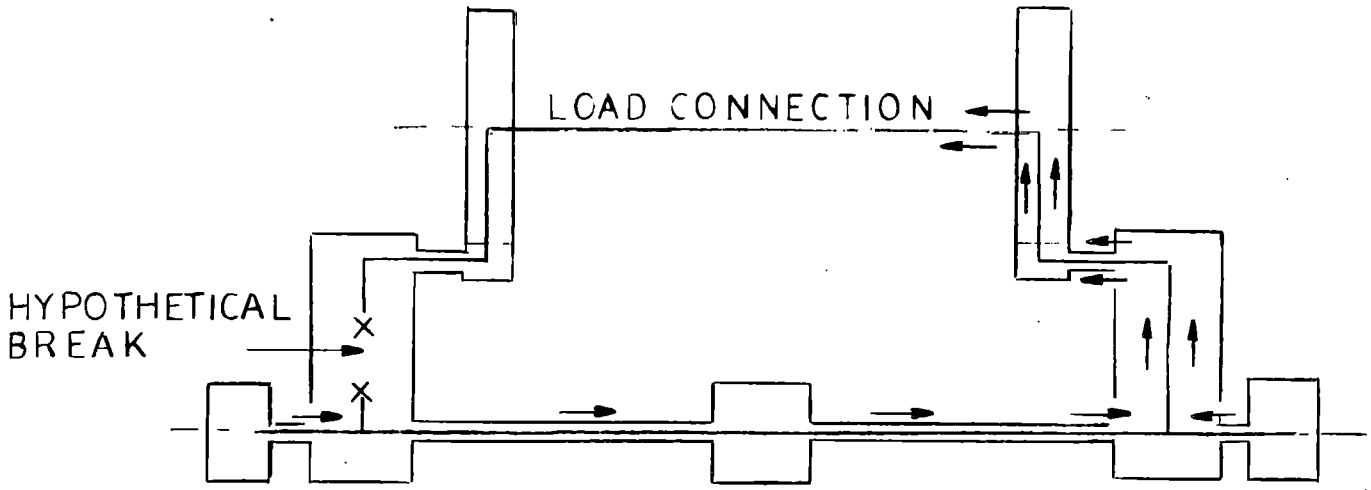

FIG. 5

BLOCK DIAGRAM OF DUAL HOLDING BRAKE CONNECTION TO HOOK LOAD.
DRESDEN 2 & 3, QUAD-CITIES 1 & 2
COMMONWEALTH EDISON CO.

SCALE NONE	SARGENT & LUNDY ENGINEERS CHICAGO
DRAWN R. S. P.	
CHECKED TJV	
ENGINEER	
APPROVED	DRAWING NO.
JOB NO. 4716 4717	FIG. 4 & 5

CUSHING 2-CC 4

1" 1/8 0 4 8

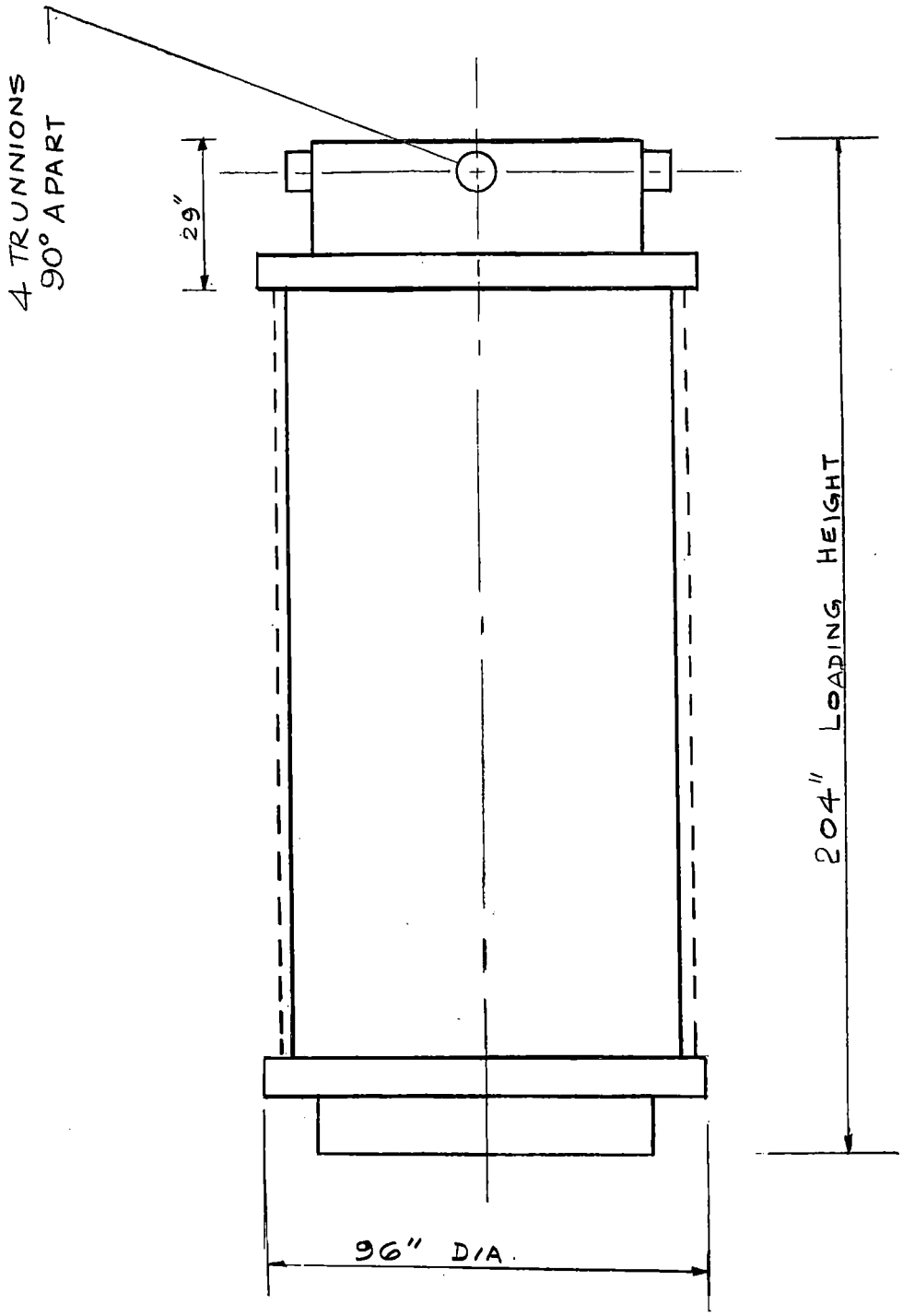

NOTE:

ALL DIMENSIONS ARE APPROXIMATE

RAIL CASK
DRESDEN 2 & 3 QUAD CITIES 1 & 2
COMMONWEALTH EDISON CO.

SCALE NONE	SARGENT & LUNDY ENGINEERS CHICAGO
DRAWN R.S.P.	
CHECKED	
ENGINEER	
APPROVED	DRAWING NO.
JOB NO.	FIGURE 6

CUSHING 2-CC 4

1" 8 0 4 8

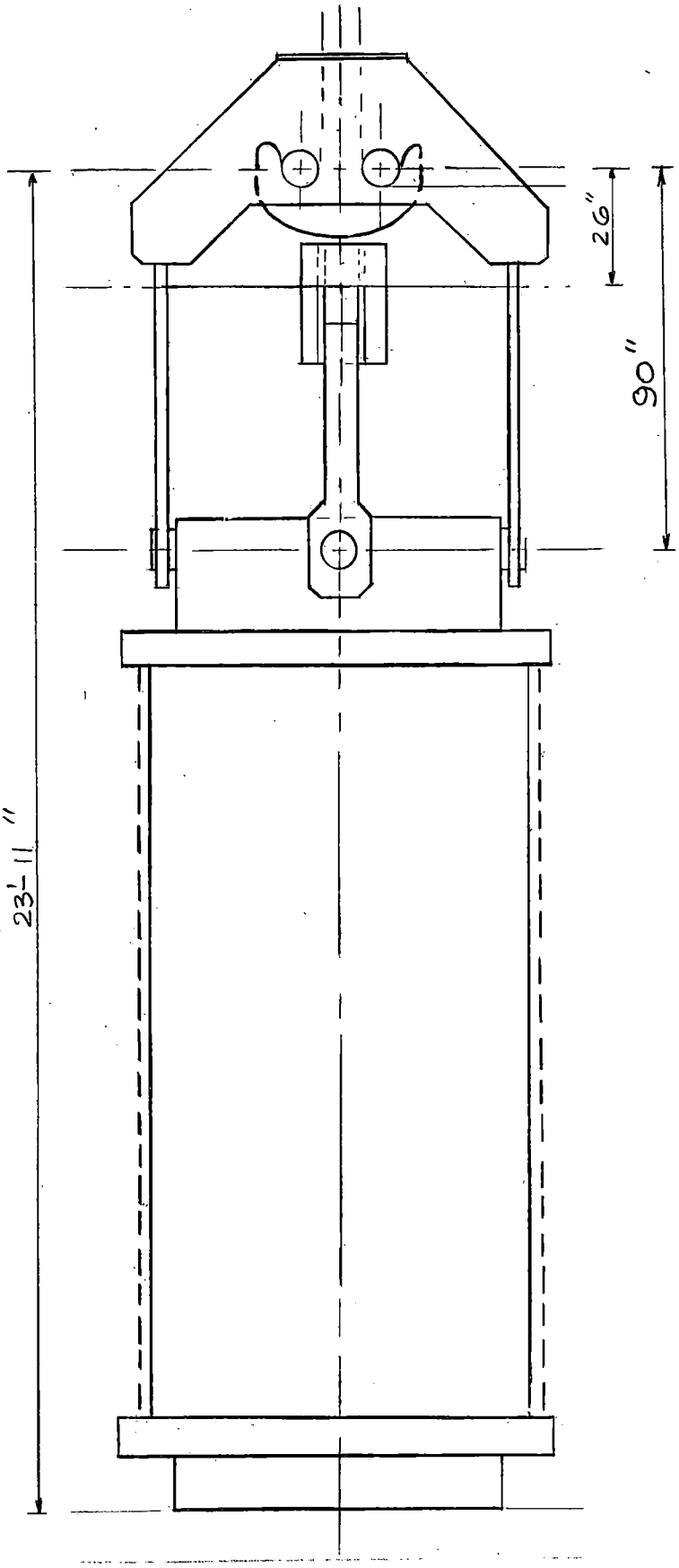

NOTE:

ALL DIMENSIONS ARE APPROXIMATE

REDUNDANT LIFT RIG
WITH
REDUNDANT HOOK
DRESDEN 2&3 QUAD CITIES 1&2
COMMONWEALTH EDISON CO.

SCALE NONE	SARGENT & LUNDY ENGINEERS CHICAGO
DRAWN R.S.P.	
CHECKED TJV	
ENGINEER TJV	
APPROVED	DRAWING NO.
JOB NO.	FIGURE 7

CUSHING 2-CC 4

1/8" 0 4 8

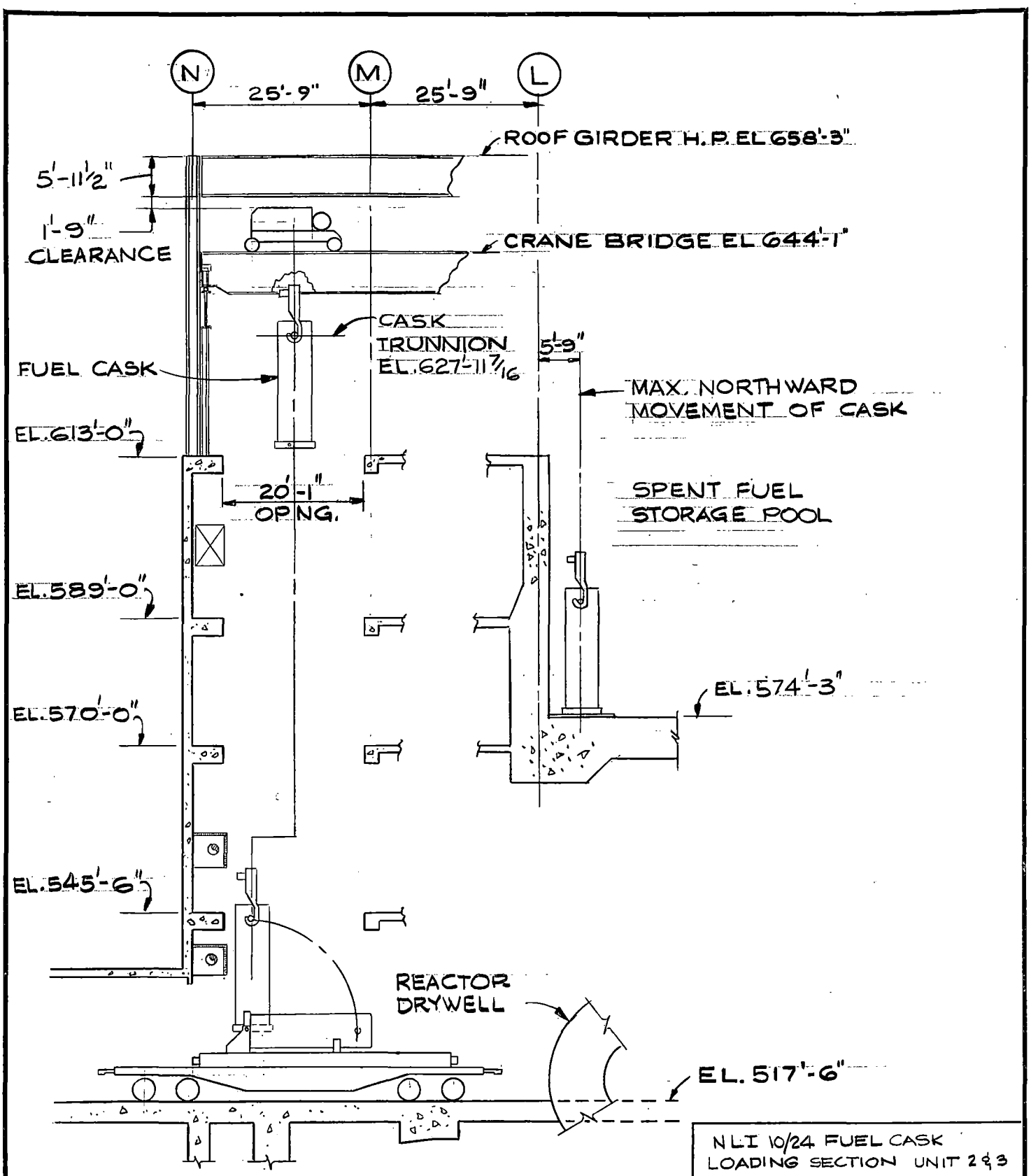

SECTION 1

NLI 10/24 FUEL CASK
LOADING SECTION UNIT 2 & 3
DRESDEN NUCLEAR POWER STATION
COMMONWEALTH EDISON COMPANY
CHICAGO, ILLINOIS

DRAWN W. DEAR		SARGENT & LUNDY ENGINEERS CHICAGO
CHECKED M.O.		
ENGINEER E. Gut.		
APPROVED		
JOB NO. 4717	JOB NO.	DWG. NO. FIG. 8 / SHEET NO. 1

POST

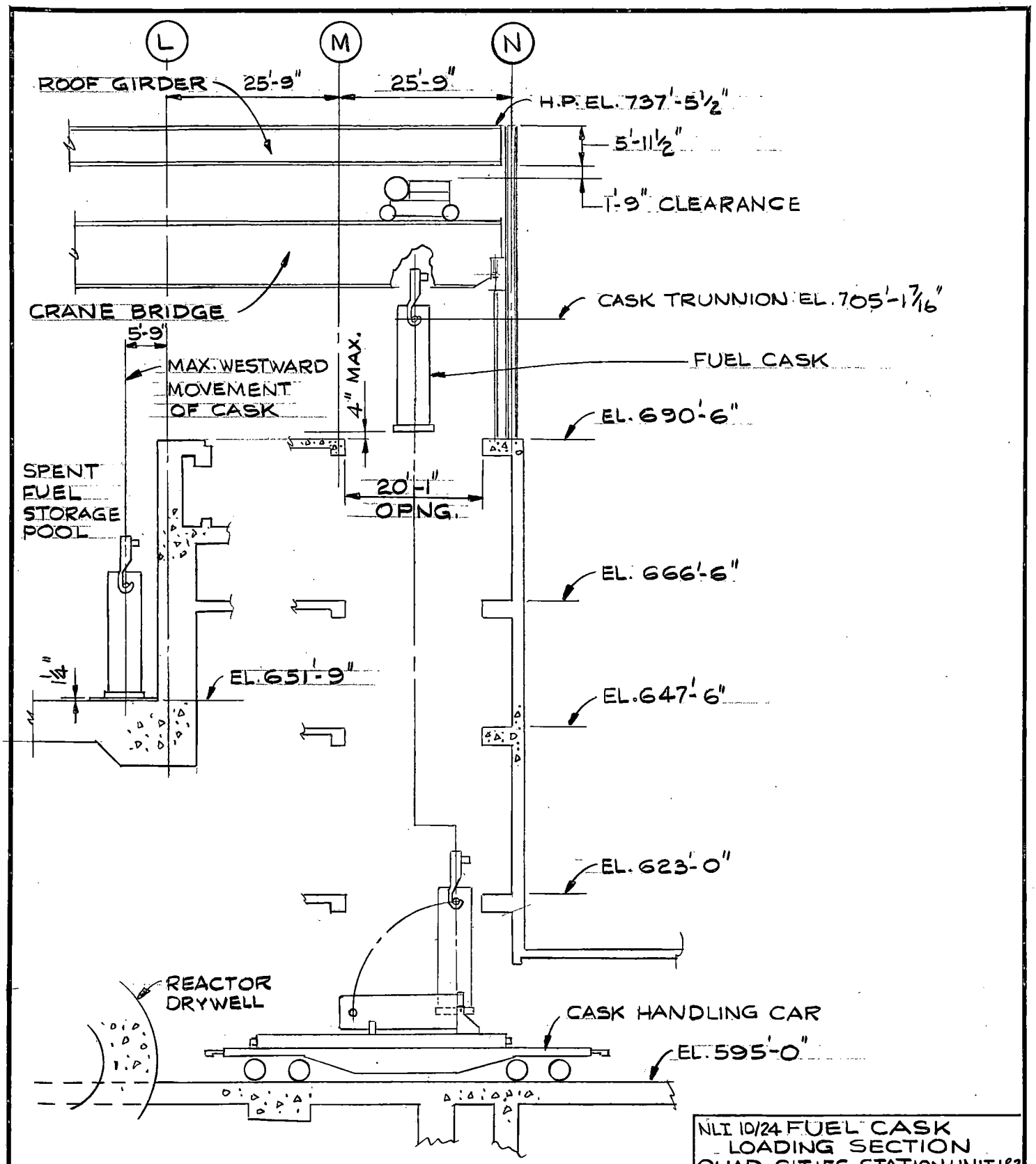

SECTION 1

NLI 10/24 FUEL CASK LOADING SECTION
QUAD-CITIES STATION UNIT 1&2
COMMONWEALTH EDISON CO.
CHICAGO, ILLINOIS

DRAWN G. HEGEDUS		SARGENT & LUNDY ENGINEERS CHICAGO
CHECKED M.O.		
ENGINEER		
APPROVED		
JOB NO. 4716	JOB NO.	DWG. NO. FIG. 8 / SHEET NO. 2

POST

WHITING CORPORATION
HARVEY, ILLINOIS 60426 U.S.A.
AREA CODE 312 331-4000

October 3, 1974

Mr. J. J. Meehan
Sargent & Lundy Engineers
55 East Monroe Street
Chicago, Illinois 60603

Dear Mr. Meehan:

Commonwealth Edison Company
P.O. Nos. 172151 and 172152
Whiting Reqn. Nos. 63687-92
and 63693-98
2 - Redundant Trolleys S/N 10779
and 10780
Quad Cities/Dresden Stations

This letter is to confirm our conversation that the attached letter by Mr. Richard P. Ramsey, Chief Engineer of Universal Wire Products, written for the Nebraska Public Power District, Cooper Nuclear Station trolley is directly applicable to your project.

The reeving of the Commonwealth trolleys, the rope construction, the dimensions of the block relative to the trolley which established the points of tangency for the number of rope lays, etc. are exactly identical to the Cooper trolley; consequently, Mr. Ramsey's statements in his letter will be directly applicable to the Commonwealth Edison trolleys.

Please call if I can be of further service.

Very truly yours,

P. J. Marchese, Manager
Crane Division

PJM/ds
attach.

March 11, 1974

Mr. P. J. Marchese, Manager
Crane Division
Whiting Corporation
Harvey, Illinois 60425

Dear Mr. Marchese:

Subject: Cooper Nuclear Station
Nebraska Public Power District
1-100/5 Ton Redundant Trolley
Contract No. E68-36
Whiting Req. Nos. 62148-53

This letter is in response to your letter of February 27 asking for our comment on the reverse bends imposed on a 1-1/4" rope on the redundant hoist system designed and built for subject company.

The most important drawing of the set which you sent is U-70069. This drawing shows the traveling block in the extreme up position and thus represents the most severe condition so far as reverse bends are concerned.

The distance from the center line of the fixed sheaves to a center line of the sheaves in a movable block (point of tangency) is 71". The nest of sheaves is on center line of the drum. The dimension of 71" is adequate to preclude any serious effects from so-called reverse bends.

Furthermore, this is not a reverse bend since the rope is not changing direction 180° but only 90° except for the lead lines which pass up to the drum; those do change direction 180° but the distance is so great that the effect would be negligible.

Reverse bends can be damaging to a piece of wire rope but it is our belief that for this to be of any significance, the reverse bends must be close-coupled. That is, the distance from the point of tangency on one sheave to the point of tangency on the next sheave must be something like one or two lays of the rope. The lay of this rope would be approximately 7-7/8". If you had a tangent to tangent distance of between 7" and 14", there would be reason for some concern.

In your installation, however, you have 9 rope lays between points of tangency. This gives the rope ample time to recover from the last bend before being required to bend in the other direction.

The Federal Register, Volume 37 #202 dated October 18, 1972 in Section 1910.179 and Paragraphs 65 (2) states that all overhead and gantry cranes constructed and installed after August 1971 shall meet ANSI Safety Code B-30.2. The referenced code was written through the collaboration of a lot of good people. There is nothing in that specification regarding reverse bends.

We have referred to some fatigue data in which 1/2" rope was cycled over 12" sheaves (D/d ratio = 24) at a load of approximately 1/6 of its breaking strength. A deliberate close-coupled reverse bend situation was used in order to accelerate the fatigue test. The rope ran between 16,000 and 18,000 cycles before termination of the test. Termination was either complete failure of the rope or failure of one strand in the rope (don't confuse one strand with one wire). We cite these data not to condone reverse bends per se, but to show that reverse bends are damaging only when close-coupled and even then after a considerable number of cycles.

It should also be noted that the above referenced fatigue test was run at approximately 4 cycles per minute at which speed sufficient heat was generated in the rope to make it inadvisable to touch the rope with the bare hands. This heat drives the lubricant out and acts against good fatigue results. In other words, had this rope been operating under the same conditions, but at a slow enough rate to avoid such heat rise, it undoubtedly would have gone considerably longer. Furthermore, had the spacing of the sheaves been opened up to two or three lays, the rope probably would have gone two or three times as long.

It is our opinion that the reverse bend which is involved in your design would produce negligible results so far as rope deterioration is concerned. Most certainly, the inspection requirements that now exist for all such equipment under OSHA rules would be more than adequate to detect broken wires which might develop at such imagined stress concentration points.

Finally, consider the relative movement of the block with respect to the fixed sheaves. A section of rope which is just tangent to the upper sheaves will have to move considerably more than 71" in order to become tangent to the block because as the rope starts to move, the block is moving away from it and this further increases the effective distance between tangent points.

We just can't agree there is a problem.

Very truly yours,
Universal Wire Products, Inc.

Original signed by
Richard P. Ramsey

Richard P. Ramsey, Chief Engineer

RPR/p
cc: Mr. J. Greenberg, Burns & Roe
D.A. Tuckerman
R. Space