Commonwealth Edison Company
ONE FIRST NATIONAL PLAZA ★ CHICAGO, ILLINOIS
Address Reply to:
POST OFFICE BOX 767 ★ CHICAGO, ILLINOIS 60690

August 5, 1970

RECEIVED AUG 5 1970 U.S. ATOMIC ENERGY COMMISSION Regulatory Mail Section

Dr. Peter A. Morris, Director
Division of Reactor Licensing
U.S. Atomic Energy Commission
Washington, D.C. 20545

Subject: Supplement No. 1 to Proposed Change No. 4 to Appendix A of DPR-19, AEC Dkt 50-237

Dear Dr. Morris:

Regulatory File Cy.

On July 29, 1970, Commonwealth Edison submitted proposed Change No. 4 to the Dresden Unit 2 Technical Specifications. The purpose of the proposed change was to permit venting of the primary containment when certain conditions were satisfied.

Subsequent discussions with you and members of your Staff indicated the need for more information relative to the radiological consequences of the proposed change. Accordingly, attached hereto is Supplement No. 1 to the proposed change which addresses this subject.

In addition to three signed originals, 19 copies of Supplement No. 1 to Proposed Change No. 4 are also submitted.

Very truly yours,

Byron Lee Jr.

Byron Lee, Jr.
Assistant to the President

SUBSCRIBED and SWORN to
before me this 5th day
of August, 1970.

Patricia A. Nelson
Notary Public

DOCKETED USAEC AUG 5 1970 REGULATORY FILE COPY

206.4
DV
2450

50-237
Received w/Ltr Dated 8-5-70
Regulatory File Cy

SUPPLEMENTARY INFORMATION ON PRIMARY CONTAINMENT VENTING

This report addresses the radiological consequences of venting the primary containment during normal operation of Dresden 2. This venting operation during normal operation is to relieve the primary containment of pressure buildup due to small instrument air pilot leaks, in-nitrogen leakage from the TIP System, air vented during the testing of the MSIV's, and leakage from air operated testable check valves. Operations to date, through a two-inch line, indicate that the venting rate expected is about four hours every three days. Therefore venting can be accomplished by utilizing an already installed system - the containment air sample system.

It is proposed to change the air sampling system discharge from the containment to the main stack, thus a constant venting of the containment can be accomplished. This would preclude the need for operator action whenever the containment needs venting and a more constant pressure would be maintained in the containment thus improving the sensitivity of the containment continuous leak rate monitor.

Thus venting of the containment during normal operation will be accomplished by drawing a continuous sample from the drywell, filtering the sample through a particulate filter and an iodine filter, and discharging the sample to the main stack. The penetration through which the sample is drawn from the primary containment is automatically isolated upon receipt of either the high pressure drywell signal or the low reactor water level signal.

DOCKETED
USAEC
AUG 5 1970
REGULATORY

2065
2450

The calculations shown below were performed to determine the dose received from venting the containment during normal operation.

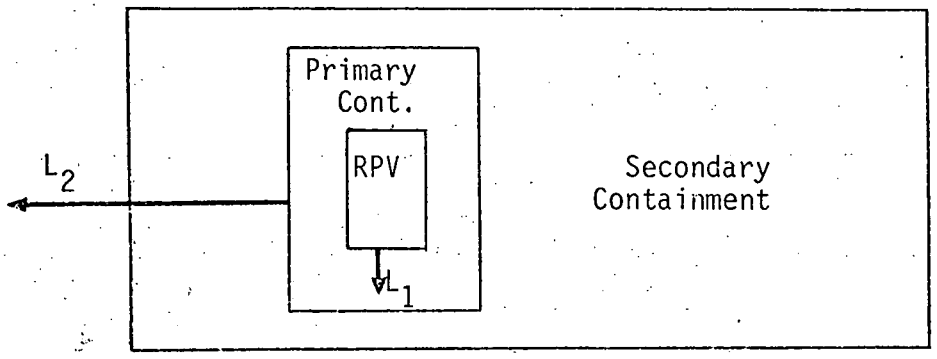

EQUATIONS

$$\frac{dN_1}{dt} = -\lambda N_1 + L_1 N_{RV} - L_2 N_1$$

$$N_1 = \frac{L_1 N_{RV}}{\lambda + L_2}\left[1 - e^{-(\lambda + L_2)t}\right] \quad \text{atoms}$$

$$N_1 L_2 = \frac{L_1 L_2 N_{RV}}{\lambda + L_2}\left[1 - e^{-(\lambda + L_2)t}\right] \quad \text{atoms}$$

$$N_1 L_2 \lambda C_i = L_1 L_2 Q_{RV}\left[\frac{(1 - e^{-(\lambda + L_2)t})}{(\lambda + L_2)}\right] \quad \text{curies/sec.}$$

CALCULATIONS

The containment will be vented at a maximum continuous rate of 3 cfm. Assumptions used for these calculations are:

	Normal (Realistic)	Technical Spec Limits
Water activity	0.5 μCi/cc	20 μCi/cc
Leakage rate	1 gpm	5 gpm

206.6

Water flashing to steam - 30%

Decay constant (λ I-131) - $\sim 1 \times 10^{-6}$

Containment volume - 2.7×10^5 ft^3

Iodine washdown factor in containment - >10

Filter efficiency - 90%

Using the normal or most realistic assumptions:

Let x = Iodine - 131 in water,

$$x = 0.5 \frac{\mu Ci}{cc} \times \frac{0.04 \ \mu Ci/cc}{2.4 \ \mu Ci/cc} \quad (1)$$

$$= 0.0083 \ \mu Ci/cc$$

$$xL_1 = \frac{(0.0083 \ \mu Ci/cc)\ (1 \text{ gpm})\ (.30)\ (.10)\ (3.79 \times 10^3 \text{ cc/gal})}{60 \text{ sec/min}}$$

$$= 1.6 \times 10^{-52} \ \mu Ci/sec$$

$$L_2 = 3 \text{ cfm}/(2.7 \times 10^5 \text{ ft}^3)\ (60 \text{ sec/min})$$

$$= 1.8 \times 10^{-7}/sec$$

$$\therefore \text{ Sample activity rate} = \frac{(1.6 \times 10^{-2} \ \mu Ci/sec)\ (1.8 \times 10^{-7}/sec)}{(1.8 \times 10^{-7} + 1 \times 10^{-6})/sec}$$

$$= 3 \times 10^{-3} \ \mu Ci/sec \quad \text{Iodine - 131}$$

Applying the filter efficiency:

Sample activity rate released to main stack = 3×10^{-4} $\mu Ci/sec$

If the Technical Specification limits for water activity and leakage rate are used, then the sample activity rate released to the main stack would be 0.60 $\mu Ci/sec$ iodine - 131.

206.7

The Technical Specifications limit the release rate of iodine from the main stack to 3.0 μCi/sec. The maximum release rate expected as a result of venting the primary containment does not exceed the Technical Specification limit. It should also be pointed out that in the Proposed Technical Specifications for Dresden 2, the iodine limit for the main stack was 7.0 μCi/sec.

CONCLUSIONS

It can be seen from the calculations made that the normal operation of venting the primary containment is a factor of 10^3 below the Technical Specification limits. Therefore, the operation of continuously venting the primary containment through the main stack (which is monitored for iodine in compliance with Technical Specifications) is an acceptable procedure for preventing the buildup of pressure in the primary containment.

Methods for minimizing venting are being investigated and will be incorporated into the Dresden Units.