Commonwealth Edison
One First National Plaza, Chicago, Illinois
Address Reply to: Post Office Box 767
Chicago, Illinois 60690

February 6, 1976

Mr. Benard C. Rusche, Director
Office of Nuclear Reactor Regulation
U.S. Nuclear Regulatory Commission
Washington, D. C. 20555

Re: Dresden Units 2 and 3
Quad Cities Units 1 and 2
Mark I Containment Evaluation
NRC Docket Nos. 050-237, 050-249, 050-254, and 050-265

Dear Mr. Rusche:

The attached report presents Commonwealth Edison's justification for continued operation of Dresden Units 2 and 3 and Quad Cities Units 1 and 2. In summary we have concluded that it is safe for continued operation because:

1) in our engineering judgment the analyses show that the torus will maintain its integrity even in the event of the largest postulated pipe break.

2) there are substantial conservatisms in the analyses which lead to our conclusion that the overall evaluation is reasonably conservative.

3) our analyses indicate that the probability of such a large pipe break is on the same order as the probability of vessel failure.

While these analyses and judgments indicate the safety of continued operation, Commonwealth Edison is undertaking additional analytical work to verify the analyses and is preparing the preliminary engineering studies for possible actions which would further increase the existing assurance that public health and safety is protected.

Although further evaluation and verification efforts are continuing, the information in the attached report, which is derived from analyses by General Electric, Bechtel, Nuclear Technology, Inc. (NUTECH), is true and correct to the best of our knowledge and belief.

Very truly yours,

R. L. Bolger
Assistant Vice President

Subscribed and sworn to
before me this 6th day
of February, 1976.

Nancy M. Hollingsworth
Notary Public

My Commission Expires September 24, 1978

Commonwealth Edison
One First National Plaza, Chicago, Illinois
Address Reply to: Post Office Box 767
Chicago, Illinois 60690

February 6, 1976

Mr. Benard C. Rusche, Director
Office of Nuclear Reactor Regulation
U.S. Nuclear Regulatory Commission
Washington, D. C. 20555

Re: Dresden Units 2 and 3
Quad Cities Units 1 and 2
Mark I Containment Evaluation
NRC Docket Nos. 050-237, 050-249, 050-254, and 050-265

Dear Mr. Rusche:

The attached report presents Commonwealth Edison's justification for continued operation of Dresden Units 2 and 3 and Quad Cities Units 1 and 2. In summary we have concluded that it is safe for continued operation because:

1) in our engineering judgment the analyses show that the torus will maintain its integrity even in the event of the largest postulated pipe break.

2) there are substantial conservatisms in the analyses which lead to our conclusion that the overall evaluation is reasonably conservative.

3) our analyses indicate that the probability of such a large pipe break is on the same order as the probability of vessel failure.

While these analyses and judgments indicate the safety of continued operation, Commonwealth Edison is undertaking additional analytical work to verify the analyses and is preparing the preliminary engineering studies for possible actions which would further increase the existing assurance that public health and safety is protected.

Although further evaluation and verification efforts are continuing, the information in the attached report, which is derived from analyses by General Electric, Bechtel, Nuclear Technology, Inc. (NUTECH), is true and correct to the best of our knowledge and belief.

Very truly yours,

R. L. Bolger
Assistant Vice President

Subscribed and sworn to

before me this 6th day

of February, 1976.

Nancy M. Wellinghorst
Notary Public

My Commission Expires September 24, 1978

EVALUATION OF MARK I CONTAINMENT CAPABILITY
AND CONTINUED OPERATION FOR QUAD CITIES UNITS 1 AND 2

Dockets 50-254 and 50-265

I. Background

The Mark I Owners Group was formed as a result of the April, 1975, request by the United States Nuclear Regulatory Commission (NRC) for additional information on the design of the Mark I containments used with the General Electric (GE) designed boiling water reactors (BWR) nuclear steam supply systems. Since its formation, Commonwealth Edison Company has been an active member of the Mark I Containment Owners Group and has followed closely the development of the program's conclusions. Previous letters from GE and Commonwealth Edison have outlined the short and long-term evaluations which are in process. GE was retained as the Mark I Containment Owners Group Project Manager. Bechtel was retained by GE as a consultant for the purpose of structural evaluation. Teledyne Materials Research (TMR) was retained by GE to perform an overview function for load development, structural evaluation, and structural criteria establishment. Nuclear Technology, Inc. (NUTECH) was retained by the Owners group in November, 1974 to act as the Group's technical representative and to keep the Group informed of program progress on a continuing basis.

The initial task for Mark I owners group during the short term program was to evaluate the integrity of the containment

vent system and vent system supports assuming most probable loads, with the governing criteria being maintenance of containment functions and ECCS piping. The results of this effort, which concluded that the vent system integrity would be maintained when subjected to the most probable pool swell loads, are documented in the five volume report which was submitted to the NRC in September, 1975.

In order to supplement the general studies being conducted by GE and Bechtel for the Mark I owners group, Commonwealth Edison Company retained NUTECH and Sargent & Lundy as independent consultants to perform a plant specific analysis. NUTECH has conducted a parallel evaluation of the structural integrity of the vent systems for Quad Cities Units 1 and 2 when subjected to the most probable pool swell loads and has confirmed the work done on behalf of the Mark I owners group as it relates to those units.

Subsequent to the submittal of the Short Term Program report, Addendum 1 to that report was prepared and submitted to the NRC in December, 1975. Documented in that addendum are analyses of the relief valve discharge piping when subjected to pool swell impact and drag loads. This addendum provides the basis for the conclusion that the integrity of the relief valve discharge piping is assured.

Also included in Addendum 1 is documentation of the

structural integrity testing of a representative vent line bellows assembly when subjected to pool swell loads. Since the bellows assemblies on Quad Cities Units 1 and 2 are located outside the torus and as such are not subjected to pool swell impact loads, this test was not required to demonstrate the integrity of the Quad Cities Units 1 and 2 bellows. Nevertheless, the observed behavior demonstrates the inherent reserve capability of welded steel structural components to maintain their leak tight integrity even when subjected to large deformations.

The one remaining item which is in the scope of the Short Term Program but which was not documented in either the Report or its Addendum is the suppression chamber torus support system evaluation. This item has been discussed orally with NRC staff most recently during meetings on January 7 and 8, 1976 in San Jose and again on January 28, 1976 in Bethesda. On January 28, 1976, representatives of GE, Bechtel, TMR, NUTECH and the Mark I Containment Owners Group met with members of the NRC Staff and provided the latest information developed by the Mark I containment evaluation program. At the conclusion of this meeting, the Staff representative advised us of their determination that shutdown was not required for any Mark I plant then operating, and requested that a letter be provided for each plant documenting the basis for continued operation. More specifically, the staff requested that:

(a) Each operating plant submit in writing, no later than February 6th, the plant unique basis justifying continued operation.

(b) Each plant with uplift equal to or greater than 0.2 inches should include a plant specific analysis of torus related ECCS piping.

(c) Each plant identified as having a downward load to capability ratio of 0.9 or greater for structural elements of the torus support system in the tabulation presented by H. A. Franklin at the meeting should emphasize the downward loading on the pertinent critical element.

This letter report presents Commonwealth Edison Company's position with regard to Quad Cities Units 1 and 2 per your request. Commonwealth Edison Company has reviewed this information and has concluded that Quad Cities Units 1 and 2 can continue operation without undue risk to the public health and safety while the Mark I containment evaluation continues.

The bases for this conclusion are addressed below. For the purpose of explanation, it is convenient to group the bases as follows:

(a) Load considerations - upward and downward.

(b) Structural response - upward and downward.

II. Containment Structural Evaluation

II.A. Load Considerations (Ref. 3)

One-twelfth scale tests of a Mark I torus were run to obtain upward and downward loads on the torus due to postulated LOCA events. Recognizing the uncertainties inherent in numerical scaling techniques, the methods used in the determination of upward and downward pressure loads on a Mark I torus conservatively represent a most probable load analysis approach by incorporating many conservatisms in data interpretation and analytical technique.

II.A.1. Upward Load Conservatisms

The upward pressure load is sensitive to the pressure history of the drywell following a postulated LOCA because the driving force for the pool swell and the resulting torus air space compression are increased with a greater drywell pressurization rate. The upward pressure load on the torus has been defined for the Short Term Program by application of the calculated FSAR drywell pressurization rate. Specifically, the 1/12th scale tests were run and analysed to obtain loads based on the FSAR pressurization history. This pressure history has been used to establish drywell design pressure. It is biased toward high values for this purpose. The FSAR pressure history assumes an instantaneous break (mass fluxes evaluated using the Moody Critical flow model assuming slip),

no steam condensation in the drywell, and a homogeneous air-steam-liquid flow mixture in the vent. This results in a high pressurization rate and increases the upward load definition.

A conservatism in the upward pressure load produced by the application of the FSAR pressure rate is illustrated by considering the reduction in mass flux which occurs with the application of the homogeneous rather than the slip formulation of the Moody Critical flow model. Even for the 20 Btu/lb mass subcooled liquid in the recirculation system, the homogeneous model shows a reduction in the mass flux from 8100 to 7100 lb m/sec. ft^2. Using the sensitivity curves, this flow reduction produces a reduction in the upward pressure load of 2 for the reference plant. The other conservatisms in the FSAR pressure history will add to this margin.

Another conservatism for the upward load used in the Short Term Program is the assumption of a 100% air flow in the vent system. A more consistent assumption aimed at determining the most probable load basis would be to apply the FSAR homogeneous air-steam-liquid vent flow assumption for both the pressure history and the non-condensible flow rate into the bubble. The other alternative is to assume 100% air vent flow for both the pressure history and the flow rate into the bubble. If, for example, the former is evaluated,

the non-condensible bubble flow rate is reduced by a factor of three and the sensitivity analysis for (A pool/A vent) shows that the maximum upward load will be reduced by a factor of two for the reference plant.

Another contribution to the total upward load on the torus structure is the impact load on the vent header. The impact pressure on the vent header for the Short Term Program was determined by applying the impact velocity measured in the 1/12th Scale tests and the results of the Pool Swell Test Facility (PSTF) impact data. However, the PSTF data were obtained for the impact of a slug having a thickness greater than the diameter of the target. In contrast, the 1/12th scale slug thickness is thinner than the vent header. The reduced slug thickness in the torus allows the liquid to be quickly decelerated under the header immediately following impact. This deceleration, which was observed in the 1/12th Scale test by a strain gage on the vent header, was a factor of three less in magnitude and three times longer in duration. The more conservative vent header impact pressure was used in the analysis as an added conservatism. The 1/12th Scale test results will be substantiated by future 1/6th Scale testing.

II.A.2. Downward Load Conservatisms

Similar conservatisms have been used in defining the

downward pressure load on the torus. The calculated FSAR pressure rate was also used to establish the downward pressure load on the torus. If the finite opening time of the break, reduced mass flux at the break, and steam condensation in the drywell were accounted for, the drywell pressure at vent clearing would be less and the downward pressure load would be reduced. The reduction in the downard pressure load for using a mass flux of 7100 instead of 8100 lb m/sec. ft^2 is 6 percent.

The data used from the 1/12th Scale tests to define the downward pressure loads was also analyzed in a conservative manner. There was some variation in the maximum downward pressure loads measured for the medium orifice runs considered as a group and for the large orifice runs considered as a group. Instead of averaging the loads measured for the medium and large orifice runs, the greatest magnitude downward pressure loads were identified for both orifice sizes. The reference plant downward pressure load was then determined by interpolating between the two maximum values of downward pressure loads.

The analysis of the 1/12th Scale test results also did not take credit for any reduction in the downward force due to three dimensional effects and pressure attenuation. The submerged pressure transducers are located at the mid-

width of the test section and will sense most directly the pressure of the bubble formed at the downcomers and the water jet forces. Both the bubble pressure and the water jet force will attenuate in the direction circumferentially away from the downcomers. However, since the pressures measured by the transducers were assumed to act uniformly over the width of the test section, a higher than actual reaction force was calculated.

In the typical torus, the downcomers are not spaced uniformly leaving a large section below the vent pipe where the influence of the downcomers is decreased. The downward pressure load produced by the bubble pressure at the downcomers and the water jet forces will be reduced in this section because of the increased distance to the nearest downcomers. However, the pressure loads should not be significantly increased where the downcomers are closely spaced because the measured pressure load of 16.33 psid approaches the driving pressure - the drywell pressure is 17.0 psid at the time of vent clearing. Therefore, due to three dimensional effects and variable downcomer spacing the maximum downward pressure cited for the reference plant of 16.33 psid is conservative.

II.B. Structural Considerations

II.B.1. Downward Loads

GE and Bechtel have estimated the capabilities of the various structural elements of the torus support system, and those results were presented to the NRC at the January 28, 1975 meeting. These plant unique results were obtained by ratioing results of a two dimensional analysis of a reference plant by Bechtel. NUTECH was retained by GE to perform a three dimensional finite element analysis of the reference plant. The Bechtel results were modified to provide better correlation with the results from the three dimensional analysis of the reference plant performed by NUTECH. Table I presents the maximum load per component, component ultimate strength and load to capability ratio for the weakest component of each plant evaluated. NUTECH, separately, as Commonwealth Edison consultants, utilized the results of a three-dimensional finite element analysis of the reference plant to compute column loads directly for the Quad Cities Units 1 and 2 torus support columns. Additionally, a detailed analysis of the column connections was performed by NUTECH to establish a minimum ultimate capability for the connections.

An evaluation has been made to establish a lower bound for the ultimate capability of each component in the load path of the torus support system for downward loads. Specifically, this includes the connection of the column to the torus shell, and the columns themselves. This has been done

for both the inside and the outside columns since they are different on Quad Cities Units 1 and 2. These lower bound ultimate capabilities have then been compared with the strength required to accommodate the currently defined "most probable" downward load. It is convenient to express these results in terms of the ratio of downward load to lower bound capability. This ratio is less than 0.90 for all of torus support components in the load path:

Component	Ratio
Outside column	0.70
Outside column connection to shell	0.89
Inside column	0.57
Inside column connection to shell	0.73

It is noted that ratio of downward load to lower bound capability of the connection of the outside column to the torus shell is approaching 0.9. As built measurements of the connection are being conducted and it is expected that the lower bound capability will be increased based upon as built condition, and the ratio reduced. The following items indicate why the ratio of 0.89 for the outside column connection to the torus shell is a conservative estimate for structural evaluation.

a. It is important to recognize that the lower bound for column capability is controlled by local yielding in the

top of the column due to a combination of axial load and bending moment. At no time does the entire cross-section of the column reach a state of general yielding. Specifically for the inside columns for Quad Cities Units 1 and 2, the average stress across the column area is 18.2 ksi which is 48% of yield. For the outside columns it is 23.2 ksi or 61% of yield.

b. Actual strength tests of materials have shown margins beyond calculated failure. During the short-term program, structural tests were performed on a number of separate components, i.e. downcomer, ring header support assembly, and bellows. Comparisons of test results with analytical predictions similar to the ones used here have confirmed that analytical procedures are conservative and under-estimate the actual component strengths.

II.B.2. Upward Loads.

As reported by GE on January 28, 1976, uplift is not a concern for Quad Cities Units 1 and 2 (ref. Table II). The hydrostatic load of the contained water and the dead weight of the suppression chamber is greater than the upward pressure load which results from the most probable pool swell load. The vent header reaction produces some additional uplift load, but due to its short duration and oscillatory nature the computed uplift is less than 0.1 inch. Even if this uplift were to occur, the resulting column loads at the end

of the transient are less than those which result at the start of the transient. Also, as discussed below, a 0.1 inch vertical movement of the torus represents no concern relative to the ECCS piping. Clearly, thermal movements of this magnitude are routinely accommodated by the connected piping.

The results of an engineering evaluation of the ECCS piping attached to the Quad Cities Units 1 and 2 torus show that the torus uplift which can be tolerated by the ECCS piping is approximately 1/4 inch based upon the results of preliminary analyses of the piping in accordance with ASME Section III, Class 2 stress limit of 2.4 Sh. By considering the plastic load carrying capacity of the pipe based upon a 3° limit on plastic bending deflection, the allowable ECCS piping deflection would be 2 to 3 times larger. Consideration of stress limits in excess of code allowables is reasonable on a temporary basis, since the subject line pressures and operating temperatures are relatively low and the actual flexibility of the piping is greater than considered in the preliminary analysis. These considerations increase the confidence that the ECCS lines could withstand upward torus deflections greater than those mentioned above and still maintain their function.

Thus, it can be concluded that a preliminary evaluation

indicates that if torus uplift were to occur, the structural integrity of the torus, torus support, and ECCS piping attached to the torus would not be compromised.

III. Probability of Occurrence

There are no calculated capability ratios greater than or equal to 0.9 for Quad Cities Units 1 and 2. Thus, the design basis LOCA does not result in dynamic loading of concern in the context of the January 28 staff request. However, since the capability ratio at the support column to torus shell weld connection is approaching 0.9, it is worth mentioning the probability of a LOCA of sufficient size to generate such loads i.e. the design basis accident LOCA guillotine rupture of the 28" recirculation system suction line at the reactor pressure vessel.

The NRC Reactor Safety Study gives the probabilities of different release categories due to a large LOCA in a BWR. The probability of a LOCA involving pipe breaks larger than six inches in diameter is 1.0×10^{-4} per reactor year (Table 5-3, page 81 - Reactor Safety Study, WASH 1400 - October, 1975). The probability of rupture for the design basis LOCA of the 28" diameter recirculation lines will be a fraction of the probability given in the Reactor Safety Study. This fraction depends on the number of critical locations for rupture and on the difference in rupture probability for various pipe sizes between 6" and 28". The frac-

tion is estimated to be about 1/50 for the 22" and 28" lines considered in the Dresden report submitted simultaneously herewith. The probability of LOCA as a result of breaks in 22" and 28" diameter pipes is no greater than (1.0×10^{-4}) $(1/50) = 2 \times 10^{-6}$ per reactor year, which is comparable to the probability value of 10^{-6} to 10^{-7} per year generally accepted for the probability of a reactor vessel failure. WASH-1318 has estimated the probability of failure of a reactor pressure vessel as in the order of 10^{-6} to 10^{-7} per year, while WASH-1400 has estimated the probability of failure of a reactor pressure vessel as 10^{-6} per year. (Ref. 1 and 2) The probability of the design basis accident LOCA relevant at Quad Cities Units 1 and 2 is less than 2×10^{-6}.

The following additional considerations are worth mentioning, although they are not required to confirm the belief that the initiating event is highly improbable.

1. The periodic inservice inspection in accordance with ASME Section XI, coupled with the leak before break feature of the ductile 304 stainless steel material and existing containment leak detection systems designed to detect pipe leaks, provide additional assurance that an instantaneous LOCA will not occur for the 22" and 28" lines.

2. No cracks due to intergranular stress corrosion cracking--a possible damage mechanism pertinent to stainless

steel--have been found in any BWR pipes of sizes 18" and larger.

3. The probability of this large LOCA for any period of time less than one reactor year is smaller than the above estimates.

IV. Actions to Confirm or Increase Safety Margins

While the previous analyses indicate that the likelihood of a design basis loss of coolant accident is very small and that the containments would maintain their integrity even in the event of such an accident, the following actions are being investigated on a parallel and expedited basis to confirm, and if appropriate, increase calculated margins.

IV.A. Verification of Bechtel-General Electric Analyses

A verification of the plant specific parameters used in the Bechtel-General Electric analyses is under way. To date discrepancies have not been found that would make the calculated numbers less conservative. We expect to have this verification complete within two weeks. Additionally, a two dimensional ring beam model analysis for Quad Cities Units 1 and 2 is being developed. We expect to report results from this detailed plant specific analysis within three months, as requested by the Staff in the January 28 meeting.

IV.B. Downcomer Submergence

We have already lowered the water level in the torii

at Quad Cities Units 1 and 2 as closely as possible to the minimum technical specification limiting condition of operation value in order to be consistent with the analysis performed. We will continue to operate at this near minimum water level.

IV.C. Model Testing

We have authorized General Electric Company to proceed with a 1/6 scale model test in order to increase confidence in the results of the 1/12 scale model tests which were used for the most probable load determination and for the G.E.-Bechtel analyses to date.

IV.D. Assessment of Potential Load Reductions

We are investigating the possibility of operating with a drywell to torus differential pressure and/or requesting a change in the technical specifications to allow operation with a decreased downcomer submergence. Either one of these methods, or a combination of both, would result in reductions of the loads currently being used in the evaluation to a point where safety margins would be significantly increased.

All of these items are being investigated in parallel. At this time we are not in a position to determine whether the steps described in section D are feasible or necessary. We expect that we will be in a position within about one month to make a definite decision.

V. Summary and Conclusions

There are no torus support system capability ratios of greater than or equal to 0.9, nor is there an uplift of greater than or equal to 0.2 inches for Quad Cities Units 1 and 2. Therefore, within the context of the Short Term Program evaluation criteria, i.e., maintenance of containment function and ECCS suction piping given the most probable course of the LOCA event, it is concluded that the continued operation of these units is justified.

This conclusion is based upon the fact that the containment function and ECCS suction piping integrity will be maintained as pointed out in Section II of this report. To gain further confidence in maintenance of containment function and ECCS piping integrity, load and structural evaluation conservatisms were also outlined in Section II. Our judgment that continued operation is safe is additionally enhanced by considering the extremely low probability (less than 2×10^{-6} per reactor year) of the initiating event of a design basis loss of coolant accident required to dynamically load the torii; the probability of occurrence is discussed in Section III.

To confirm our conclusions, investigations are now under way as outlined in Section IV. Should these investigations alter our conclusions, we will report this fact to you immedi-

ately. Based on our investigation and evaluation to date, we conclude that containment function and ECCS suction piping integrity will be maintained in the highly unlikely event of a design basis loss of coolant accident, thus ensuring the health and safety of the public.

Reference

1. NRC "Reactor Safety Study," WASH-1400, October, 1975.

2. NRC "Analysis of Pressure Vessel Statistics from Fossil-fueled Power Plant Service and Assessment of Reactor Vessel Reliability in Nuclear Power Plant Service," WASH-1318, May, 1974.

3. K. W. Hess (GE) to Mark I Utilities February 5, 1976 Letter #M1-G-03

QUAD CITIES - TABLE I

PLANT	COLUMNS (max. load)			LUGS			PINS			WELDS			RING GIRDERS SHELL STRESSES		
	Load	Strength	Ratio	Load	Strength	Ratio	Load	Strength	Ratio	Load	Strength	Ratio	Stress psi	dyn. yield	Ratio
OYSTER CREEK	727	771	.94	643	1155	.56	643	949	.68	786	1914	.41	56	55*	1.0
NINE MILE POINT	711	1001	.71	711	1155	.62	711	1328	.54	711	1133	.63	34	42	.81
BROWNS FERRY 2&3	898	814	1.10	898	907	0.99	898	1139	.79	1098	2222	.49	27	42	.64
QUAD CITIES 1&2	1003	1441	.70	NA			NA			1003	1122	.89	34	42	.81
MILLSTONE 1	823	730	1.13	823	907	.91	823	1139	.72	1006	1914	.53	35	42	.82
MONTICELLO	746	814	.92	912	907	1.0	912	1139	.80	912	1881	.48	21	42	.50
VERMONT YANKEE	968	1441	.67	NA			NA			968	1100	.88	28	42	.67
PILGRIM	993	1474	.67	NA			NA			993	1320	.75	28	42	.67
PEACH BOTTOM	1155	1594	.73	NA			NA			1155	1617	.71	28	42	.67
FITZPATRICK	1105	1595	.69	NA			NA			1105	1320	.84	23	42	.55
COOPER	1051	1364	.77	NA			NA			1051	[illegible]	[illegible]	24	42	.57
DUANE ARNOLD	687	856	.80	NA			NA			687	1496	.46	34	42	.81
FITCH 1	968	1595	.61	NA			NA			968	1001	.97	29	42	.69
FITCH 2	826	1188	.70	NA			NA			826	1210	.68	26	42	.62
FERMI 2	900	1892	.48	NA			NA			900	1573	.57	25	42	.60

*actual material properties

Column Strength increased 10% for dynamic loads & material properties

LOADS SUMMARY

QUAD CITIES - TABLE II

TORUS UPLIFT

PLANT	RISE HEIGHT (IN)
VERMONT YANKEE ✓	5.44 (1) D.V.
MONTICELLO ✓	* (.13 CALC)
OYSTER CREEK ✓	* (< .13)
NINE MILE POINT	* (<< .13)
MILLSTONE	* (< .13)
PILGRIM ✓	0.497(1) D.V.
BRUNSWICK	NA (CONCRETE)
COOPER STATION ✓	0.2 (2)
FITSPATRICK	0.2
HATCH 2	0.2
HATCH 1	0.15
DUANE ARNOLD ✓	0.06
BROWNS FERRY	0.05
DRESDEN 283	0.06
QUAD CITIES	0.05
FERMI	0.05
PEACH BOTTOM	0.05 (1) D.V.

* ANCHOR BOLT PLANTS

(1) COMPUTER RUN

(2) INTERPOLATED VALUE

D.V. = DESIGN VERIFIED

✓ = PLANTS CHECKED FOR BREAK SIZE SENSITIVITY

PWI 1/28/76

(4)

EVALUATION OF MARK I CONTAINMENT CAPABILITY AND CONTINUED OPERATION FOR DRESDEN UNITS 2 AND 3

Dockets 50-237 and 50-249

I. Background

The Mark I Owners Group was formed as a result of the April, 1975 request by the United States Nuclear Regulatory Commission (NRC) for additional information on the design of the Mark I containments used with the General Electric (GE) designed boiling water reactors (BWR) nuclear steam supply systems. Since its formation, Commonwealth Edison Company has been an active member of the Mark I Containment Owners Group and has followed closely the development of the program's conclusions. Previous letters from GE and Commonwealth Edison have outlined the short and long-term evaluations which are in process.

GE was retained as the Mark I Containment Owners Group as Project Manager. Bechtel was retained by GE as a consultant for the purpose of structural evaluation. Teledyne Materials Research (TMR) was retained by GE to perform an overview function for load development, structual evaluation and structural criteria establishment. Nuclear Technology, Inc. (NUTECH) was retained by the Owners Group in November, 1974, to act as the Group's representative and to keep utilities

informed of program progress on a continuing basis.

The initial task for the Mark I Owners Group during the short term program was to evaluate the integrity of the containment vent system and vent system supports assuming most probable loads, with the governing criteria being maintenance of containment functions and ECCS piping. The results of this effort, which concluded that the vent system integrity would be maintained when subjected to the most probable pool swell loads, are documented in the five volume report which was submitted to the NRC in September, 1975.

In order to supplement the general studies being conducted by GE and Bechtel for the Mark I Owners Group, Commonwealth Edison Company retained NUTECH and Sargent & Lundy as independent consultants to perform a plant specific analysis. NUTECH has conducted a parallel evaluation of the structural integrity of the vent systems for Dresden Units 2 and 3 when subjected to the most probable pool swell loads and has confirmed the work done on behalf of the Mark I Owners Group as it relates to those units.

Subsequent to the submittal of the Short Term Program Report, Addendum 1 to that Report was prepared and submitted to the NRC in December, 1975. Documented in that addendum are analyses of the relief valve discharge piping when subjected to pool swell impact and drag loads. This addendum

provides the basis for assuring that the integrity of the relief value discharge piping is assured.

Also included in Addendum 1 is documentation of the structural integrity testing of a representative vent line bellows assembly when subjected to pool swell loads. Since the bellows assemblies on Dresden Units 2 and 3 are located outside the torus and as such are not subjected to pool swell impact loads, this test was not required to demonstrate the integrity of the Dresden Units 2 and 3 bellows. Nevertheless, the observed behavior demonstrates the inherent reserve capability of welded steel structural components to maintain their leak tight integrity even when subjected to large deformations.

The one remaining item which is in the scope of the Short Term Program but which was not documented in either the Report or its Addendum is the suppression chamber torus support system evaluation. This item has been discussed orally with NRC staff most recently during meetings on January 7 and 8, 1976 in San Jose and again on January 28, 1976 in Bethesda. On January 28, 1976, representatives of GE, Bechtel, TMR, NUTECH and of the Mark I Containment Owners Group met with members of the NRC Staff and provided the latest information developed by the Mark I containment evaluation program. At the conclusion of this meeting the Staff representatives

advised us of their determination that shutdown was not required for any Mark I plant then operating, and requested that a letter be provided for each plant documenting the basis for continued operation. More specifically, the Staff requested that:

(a) Each operating plant submit in writing, no later than February 6th, the plant unique basis justifying continued operation.

(b) Each plant with uplift equal to or greater than 0.2 inches should include a plant specific analysis of torus related ECCS piping.

(c) Each plant identified as having a downward load to capability ratio of 0.9 or greater for structural elements of the torus support system, in the tabulating presented by H.A. Franklin at the meeting should emphasize the downward loading on the pertinent critical element. Dresden Units 2 and 3 are included in this category.

This letter report presents Commonwealth Edison Company's position with regard to Dresden Units 2 and 3 per your request. Commonwealth Edison Company has reviewed this

information and has concluded that Dresden Units 2 and 3 can continue operation without undue risk to the public health and safety while the Mark I containment evaluation continues.

The bases for this conclusion are addressed below. For the purpose of explanation, it is convenient to group the bases as follows:

(a) Load considerations - upward and downward.

(b) Structural response - upward and downward.

II. Containment Structural Evaluation

II.A. Load Considerations (Ref. 3)

One-twelfth scale tests of a Mark I torus were run to obtain upward and downward loads on the torus due to postulated LOCA events. Even recognizing the uncertainties inherent in numerical scaling techniques, the methods used in the determination of upward and downward pressure loads on a Mark I torus conservatively represent a most probable load analysis approach by incorporating many conservatisms in data interpretation and analytical technique.

II.A.1. Upward Load Conservatisms

The upward pressure load is sensitive to the pressure history of the drywell following a postulated LOCA because

the driving force for the pool swell and the resulting torus air space compression are increased with a greater drywell pressurization rate. The upward pressure load on the torus has been defined for the Short Term Program by application of the calculated FSAR drywell pressurization rate. Specifically, the 1/12th scale tests were run and analyzed to obtain loads based on the FSAR pressurization history. This pressure history has been used to establish drywell design pressure. It is biased towards high values for this purpose. The FSAR pressure history assumes an instantaneous break (mass fluxes evaluated using the Moody Critical flow model assuming slip), no steam condensation in the drywell, and a homogeneous air-steam-liquid flow mixture in the vent. This results in a high pressurization rate and increases the upward load definition.

A conservatism in the upward pressure load produced by the application of the FSAR pressure rate is illustrated by considering the reduction in mass flux which occurs with the application of the homogeneous rather than the slip formulation of the Moody Critical flow model (Ref. 3) Even for the 20 Btu/lb mass subcooled liquid in the recirculation system, the homogeneous model shows a reduction in the mass flux from 8100 to 7100 lb m/sec. ft^2. Using the sensitivity

curves, this flow reduction produces a reduction in the upward pressure load of 2 percent for the reference plant. The other conservatisms in the FSAR pressure history will add to thi margin.

Another conservatism for the upward load used in the Short Term Program is the assumption of a 100% air flow in the vent system. A more consistent assumption aimed at determining the most probable load basis would be to apply the FSAR homogeneous air-steam-liquid vent flow assumption for both the pressure history and the non-condensible flow rate into the bubble. The other alternative is to assume 100% air vent flow for both the pressure history and the flow rate into the bubble. If, for example, the former is evaluated, the non-condensible bubble flow rate is reduced by a factor of three and the sensitivity analysis for (A pool/A vent) shows that the maximum upward load will be reduced by a factor of two for the reference plant.

Another contribution to the total upward load on the torus structure is the impact load on the vent header. The impact pressure on the vent header for the Short Term Program was determined by applying the impact velocity measured in the 1/12th Scale tests and the results of the Pool Swell Test Facility (PSTF) impact data. However, the PSTF data were obtained for the impact of a slug having a thickness greater than the diameter of the target. In contrast, the

1/12th Scale slug thickness is thinner than the vent header. The reduced slug thickness in the torus allows the liquid to be quickly decelerated under the header immediately following impact. This deceleration, which was observed in the 1/12th Scale tests, would be expected to yield a lower impact load. Indeed, the impact pressure history measured in the 1/12th Scale test by a strain gage on the vent header was a factor of three less in magnitude and three times longer in duration. The more conservative vent header impact pressure was used in the analysis as an added conservatism. The 1/12th Scale test results will be substantiated by future 1/6th Scale testing.

II.A.2. Downward Load Conservatisms

Similar conservatisms have been used in defining the downward pressure load on the torus. The calculated FSAR pressure rate was also used to establish the downward pressure load on the torus. If the finite opening time of the break, reduced mass flux at the break, and steam condensation in the drywell were accounted for, the drywell pressure at vent clearing would be less and the downward pressure load would be reduced. The reduction in the downward pressure load for using a mass flux of 7100 instead of 8100 lb m/sec. ft.^{2} is 6 percent.

The data used from the 1/12th Scale tests to define the downward pressure loads was also analyzed in a conservative

manner. There was some variation in the maximum downward pressure loads measured for the medium orifice runs considered as a group and for the large orifice runs considered as a group. Instead of averaging the loads measured for the medium and large orifice runs, the greatest magnitude downward pressure loads were identified for both orifice sizes. The reference plant downward pressure load was then determined by interpolating between the two maximum values of downward pressure loads.

The analysis of the 1/12th Scale test results also did not take credit for any reduction in the downward force due to three dimensional effects and pressure attenuation. The submerged pressure transducers are located at the mid-width of the test section and will sense most directly the pressure of the bubble formed at the downcomers and the water jet forces. Both the bubble pressure and the water jet force will attenuate in the direction circumferentially away from the downcomers. However, since the pressures measured by the transducers were assumed to act uniformly over the width of the test section, a higher than actual reaction force was calculated.

In the typical torus, the downcomers are not spaced uniformly leaving a large section below the vent pipe where

the influence of the downcomers is decreased. The downward pressure load produced by the bubble pressure at the downcomers and the water jet forces will be reduced in this section because of the increased distance to the nearest downcomers. However, the pressure loads should not be significantly increased where the downcomers are closely spaced because the measured pressure load of 16.33 psid approaches the driving pressure - the drywell pressure is 17.0 psid at the time of vent clearing. Therefore, due to three dimensional effects and variable downer spacing the maximum downward pressure cited for the reference plant of 16.33 psid is conservative.

II.B. Structural Considerations

II.B.1. Downward Loads

GE and Bechtel have estimated the capabilities of the various structural elements of the torus support system, and those results were presented to the NRC at the January 28, 1975 meeting. These plant unique results were obtained by ratioing results of a two dimensional analysis of a reference plant by Bechtel. NUTECH was retained by GE to perform a three dimensional finite element analysis of the reference plant. The Bechtel results were modified to provide better correlation with the results from the three dimensional analysis of the reference plant performed

by NUTECH. Table I presents the maximum load per component, component ultimate strength and load to capacity ratio for the weakest component of each plant evaluated. NUTECH, separately, as Commonwealth Edison's consultant, utilized the results of a three-dimensional finite element analysis of the reference plant to compute column loads directly for the Dresden Units 2 and 3 torus support columns. Additionally, a detailed analysis of the column connections was performed by NUTECH to establish a minimum ultimate capability for the connections.

An evaluation has been made to establish a lower bound for the ultimate capability of each component in the load path of the torus support system for downward loads. Specifically, this includes the connection of the column to the torus shell, the columns themselves, and the pin connection of the column to its base plate. This has been done for both the inside and the outside columns since they are different on Dresden Units 2 and 3. These lower bound ulimate capabilities have then been compared with the strength required to accommodate the currently defined "most probable" downward load. It is convenient to express these results in terms of the ratio of downward load to lower bound capability. This ratio is substantially less than 0.90

for the following torus support components in the load path:

Component	Ratio
Outside column pin connection	0.73
Outside column	0.54
Outside column connection to shell	0.30
Inside column connection to shell	0.4

The most probable load in the existing inside column is very close to the lower bound prediction of the capability of the inside column pin connection and about 10% over the lower bound prediction of the capability of the column itself.

It should be noted that the load to column capability ratio of 1.10 has been estimated for inside columns at Dresden Units 2 and 3 based on column capability calculated by using a 10% increase of ultimate strength to account for the expected increase in material properties due to the extremely short duration of maximum loads.

Because the loads applied to the torus support columns resulting from a LOCA are highly transient in nature, the effect of high strain rate on yield strength should be considered. A substantial amount of data predicting the increases in yield strength due to high strain rate is available. For the strain rate of 10×10^{-3} in/in/sec, which is expected to occur in columns

during LOCA, a net increase of about 10% can be expected. Following are the reasons which indicate why the ratio of 1.1 and .99 for the inside columns and inside pin connections, respectively, are conservative estimates for the structural evaluation.

a. The minimum specified yield strength value of the A53-GB steel used for inside columns is 35 ksi. This value is compared with available test values for 42 heat samples of such steel for another nuclear power plant. Table II provides the heat numbers, tested yield strength, tensile strength, and identifies the suppliers. A statistical analysis of this sample gives the following values for yield strength (See Graph I for histogram):

Mean value	=	47.64 ksi
Standard deviation	=	3.67 ksi
Coefficient of variation	=	7.6%
Maximum value	=	58.8 ksi
Minimum value	=	40.7 ksi
Minimum specified yield strength	=	35.0 ksi

When compared with the minimum specified value, on an average, an increase in the strength of about 37% can be expected. For those samples, it is seen that the minimum value is about 16% higher than the minimum specified value.

b. The effective column length factor, K, of 1.0 was used in the calculation of column strength. The existing columns are, however, rigidly connected to the torus at the top and are pinned at the bottom. Under this condition, the theoretical minimum effective length of the column is only 70% of the actual length, and as such, an effective length factor of 0.7 could have been used in the calculations. This reduced length allows an increase of about 5.5.% in the column strength.

Therefore, considering the effect of actual yield stress test data for the same material versus the minimum specified value, and the effective length factor, K, a potential increase in column strength by a factor of

$$(1.16)(1.055) = 1.22$$

over the nominal strength is possible. Thus the ratio of predicted column load to actual column strength may be reduced to

$$1.10/1.22 = 0.90$$

Therefore, as shown above, the evaluation by GE and Bechtel is a conservative estimate of column capability and, the columns are expected to maintain their integrity under the most probable loads due to the postulated LOCA.

c. It is important to recognize that the lower bound for column capacity is controlled by local yielding in the top of the column due to a combination of axial load and bending

moment. At no time does the entire cross-section of the column reach a state of general yielding. Specifically for the inside columns for Dresden Units 2 and 3, the average stress across the column area is 29.5 ksi, which is 84% of yield. For the outside columns it is 18.1 ksi or 43% of yield.

d. Actual strength tests for materials have shown margins beyond calculated failure. During the short-term program, structural tests were performed on a number of separate components, i.e. downcomer, ring header support assembly and bellows. Comparisons of test results with analytical predictions similar to the ones used here have confirmed that analytical procedures are conservative and under-estimate the actual component strengths.

e. As indicated above, only the inside torus supports are loaded to near their lower bound ultimate capability. The outside columns have significant additional load carrying capability. In the event that the inner columns begin to reach their yield capability, load redistribution would occur and the outside columns would share more of the total load than predicted by linear elastic analyses.

II.B.2. Upward Loads.

As reported by GE on January 28, 1976, uplift is not a concern for Dresden Units 2 and 3. (Ref. Table III)

The hydrostatic load of the contained water and the dead weight of the suppression chamber is greater than the upward pressure load which results from the most probable pool swell load. The vent header reaction produces some additional uplift load, but due to its short duration and oscillatory nature and because the torus support column base plates are provided with anchor bolts, the computed uplift is less than 0.1 inch. Even if this uplift were to occur, the resulting column loads at the end of the transient are less than those which result at the start of the transient. Also, as discussed below, a 0.1 inch vertical movement of the torus represents no concern relative to the ECCS piping. Clearly, thermal movements of this magnitude are routinely accommodated by the connected piping.

The results of an engineering evaluation of the ECCS piping attached to the Dresden Units 2 and 3 torus show that the torus uplift which can be tolerated by the ECCS piping is approximately 0.2 inches based upon the results of preliminary analyses of the piping in accordance with the ASME Section III, Class 2 stress limit of 2.4 S_H. By considering the plastic load carrying capacity of the pipe based upon a 3° limit on plastic bending deflection, the allowable ECCS piping deflection would be 2 to 3 times larger. Consideration of stress limits in excess of code allowables is reasonable

on a temporary basis, since the subject line pressures and operating temperatures are relatively low and the actual flexibility of the piping is greater than considered in the preliminary analysis. These factors increase the confidence that the ECCS lines could withstand upward torus deflections greater than those mentioned above and still maintain their function.

Thus, it can be concluded that a preliminary evaluation indicates that if torus uplift were to occur, the structural integrity of the torus and ECCS piping attached to the torus would not be compromised.

III. Probability of Occurrence

The break size required to release sufficient reactor coolant energy at a rapid rate to dynamically load the torus resulting in the calculated capability ratios of 0.9 or greater at Dresden Units 2 and 3 have been calculated by GE to be 2.51 square feet or larger for liquid breaks and 3.34 square feet or larger (1.33 x liquid break size) for steam breaks (See Table IV). Liquid lines with break areas of this size are the 28" and 22" recirculation system lines with break areas of 4.29 and 2.59 square feet respectively. No steam lines have break areas equal to or greater than the minimum area of 3.34 square feet. Even though the calculated break

areas for the 22" recirculation lines exceed the minimum only marginally, and flow losses in the piping could reduce the effective flow area below the minimum, we have included these lines in this probability discussion. Based on the postulated circumferential or longitudinal break of pipes of 22" in diameter or larger, the probability of occurrence of a LOCA of sufficient size to generate the forces considered herein is set forth below.

The NRC Reactor Safety Study gives the probabilities of different release categories due to a large LOCA in a BWR. The probability of a LOCA involving pipe breaks larger than six inches in diameter is 1.0×10^{-4} per reactor year (Table 5-3, page 81 - Reactor Safety Study, WASH 1400 - October, 1975). The probability of rupture for 22" and 28" diameter recirculation lines will be a fraction of the probability value given in the Reactor Safety Study. This fraction depends on the number of critical locations for rupture and on the difference in rupture probability for various pipe sizes between 6" and 28". The fraction is estimated to be about 1/50. Therefore, the probability of LOCA as a result of breaks in 22" and 28" diameter pipes is no greater than (1.0×10^{-4}) $(1/50) = 2 \times 10^{-6}$ per reactor year, which is comparable to the probability value of 10^{-6} to 10^{-7} per year generally accepted for the probability of a reactor vessel failure. WASH-1318 has estimated the probability of failure of a reactor pressure

vessel as 10^{-6} to 10^{-7} per year while WASH-1400 has estimated the probability of failure of a reactor pressure vessel as 10^{-6} per year. (Ref. 2 and 3)

This resultant low probability would be expected because the number of locations along each individual pipe run where failures may originate is restricted to the relatively few locations where the stress levels are the highest. For large pipe sizes and short runs of the reactor coolant recirculating loops, the pipe system may be compared to that of pressure vessels and pressure vessel failure estimates become appropriate to evaluate the probabilities of ruptures of large pipes. Thus, a large LOCA due to the rupture in the 22" and 28" recirculating pipelines is a highly unlikely event.

The following additional considerations are worth mentioning although they are not required to confirm the belief that the initiating event is highly improbable.

1. The periodic inservice inspection in accordance with ASME Section XI, coupled with the leak before break characteristic of ductile 304 stainless steel material and existing containment leak detection systems designed to detect pipe leaks, provide additional assurance that an instantaneous LOCA will not occur for the 22" and 28" lines.

2. No cracks due to intergranular stress corrosion cracking--a possible damage mechanism pertinent to stainless steel--have been found in any BWR pipes of sizes 18" and larger.

3. The probability of this large LOCA for any period of time less than one reactor year is smaller than the above estimates.

IV. Actions To Confirm Or Increase Safety Margins

While the previous analyses indicate that the likelihood of a major loss of coolant accident involving 22" and 28" pipes is very small and that the containments would maintain their integrity even in the event of such an accident, the following actions are being investigated on a parallel and expedited basis to confirm, and if appropriate, increase calculated margins.

IV.A. Verification of Bechtel-General Electric Analyses

A verification of the plant specific parameters used in the Bechtel-General Electric analyses is under way. To date discrepancies have not been found that would make the calculated numbers less conservative. We expect to have this verification complete within two weeks. Additionally, a two dimensional ring beam model analysis for Dresden Units 2 and 3 is being developed. We expect to report results from this detailed plant specific analysis within three

months, as requested by the Staff in the January 28 meeting.

IV.B. Downcomer Submergence

We have already lowered the water level in the torii of Dresden Units 2 and 3 as closely as possible to the minimum technical specification limiting condition of operation value in order to be consistent with the analysis performed. We will continue to operate at this near minimum water level.

IV.C. Model Testing

We have authorized General Electric Company to proceed with a 1/6 scale model test in order to increase confidence in the results of the 1/12 scale model tests which were used for the most probable load determination and for the G.E.-Bechtel analyses to date.

IV.D. Assessment of Potential Load Reductions

We are investigating the possibility of operating with a drywell to torus differential pressure and/or requesting a change in the technical specifications to allow operation with a decreased downcomer submergence. Either one of these methods, or a combination of both, would result in reductions of the loads currently being used in the evaluation to a point where safety margins would be significantly increased.

IV.E. Loading Maldistribution

Potential load maldistributions among the 32 columns have not been considered in the calculations to date. However, we have started to investigate the possibility of measuring the individual column support loadings at Dresden station.

IV.F. Design Modifications

Preliminary designs have been developed by NUTECH to reinforce the inside columns and base pin connections for the Dresden 2 and 3 torus supports. The preliminary design consists of adding reinforcement to the columns in the form of a split pipe that fits around the existing columns (Figure I). The reinforcement of the column pin would consist of adding bearing blocks and wedges to transfer the column load directly to the foundation. (Figure II)

The detailed designs of the reinforcement are proceeding to the point of developing design drawings to be utilized for fabrication and installation. Additionally, procurement specifications, fabrication specifications and installation specifications are being prepared for the support modifications.

To assure that the detailed designs can be implemented, an indepth as-built survey has been completed to establish the configurations of the existing torus support system. The feasibility of modifications will be evaluated utilizing the

simple beam models which were described above (IV.A.).

All of these items are proceeding in parallel. At this time we are not in a position to determine whether the steps described in sections D and F are feasible or necessary. We expect that we will be in a position within about one month to make a definite decision. At this time it is our judgment that we will implement D or F with schedules to be determined within the one month time frame. This period is critical path time for preliminary engineering. The implementation of either D or F will not be delayed by the parallel engineering activities.

V. Summary and Conclusions

The structural evaluations for Dresden Units 2 and 3 indicate the ability of the containments for these units to withstand the forces which would be generated during even very large LOCAs, which as shown in Section III are extremely improbable. Accordingly, the results of the torus support system evaluation meet the objectives of the Short Term Program. Continued operation is fully justified and does not present an undue risk to the public health and safety.

These judgments have been reached after thorough consideration of those calculated load to capability ratios which are greater than 0.9. While we recognize that there

can be concern about scaling from the one twelfth scale model tests, as shown in section II.A , there are many offsetting conservative factors in the load analysis. Similarly, section II.B. illustrates the conservatism in the structural analysis. In spite of the conservatism and the safety factors provided thereby, Commonwealth Edison is continuing its analytical efforts and is also investigating actions which could be conducted in the near term to further increase the safety factors. These parallel efforts will enable a sound determination to be made as to the appropriateness of further actions in the near future. The structural and probability analyses, however, fully justify continued operation of these units at this time.

Reference

1. NRC "Reactor Safety Study," WASH-1400, October, 1975.

2. NRC "Analysis of Pressure Vessel Statistics from Fossil-fueled Power Plant Service and Assessment of Reactor Vessel Reliability in Nuclear Power Plant Service," WASH-1318, May, 1974.

3. K. W. Hess (GE) to Mark I Utilities February 5, 1976 Letter #M1-G-03

DRESDEN - TABLE I

PLANT	COLUMNS (max. load)			LUGS			PINS			WELDS			RING GIRDERS SHELL STRESSES		
	Load	Strength	Ratio	Load	Strength	Ratio	Load	Strength	Ratio	Load	Strength	Ratio	Stress psi	dyn. yield	Ratio
OYSTER CREEK	727	771	.94	643	1155	.56	643	949	.68	786	1914	.41	56	56*	1.0
G-MILE POINT	711	1001	.71	711	1155	.62	711	1328	.54	711	1133	.63	34	42	.81
DRESDEN 2&3	898	814	1.10	898	907	0.99	898	1139	.79	1098	2222	.49	27	42	.64
QUAD CITIES 1&2	1003	1441	.70	NA			NA			1003	1122	.89	34	42	.81
MILLSTONE 1	823	730	1.13	823	907	.91	823	1139	.72	1006	1914	.53	35	42	.82
MONTICELLO	746	814	.92	912	907	1.0	912	1139	.80	912	1381	.48	21	42	.50
VERMONT YANKEE	968	1441	.67	NA			NA			968	1100	.88	28	42	.67
PILGRIM	993	1474	.67	NA			NA			993	1320	.75	28	42	.67
PEACH BOTTOM	1155	1534	.73	NA			NA			1155	1617	.71	28	42	.67
FITSPATRICK	1105	1595	.69	NA			NA			1105	1320	.84	23	42	.5[illegible]
COOPER	1051	1364	.77	NA			NA			1051	[illegible]	[illegible]	24	42	.57
CRANE ARNOLD	687	853	.80	NA			NA			687	1496	.46	34	42	.81
HATCH 1	968	1595	.61	NA			NA			968	1001	.97	29	42	.69
HATCH 2	826	1183	.70	NA			NA			826	1210	.68	26	42	.62
FERMI 2	900	1892	.48	NA			NA			900	1573	.57	25	42	.60

*Actual material properties

Column Strength increased 10% for dynamic loads & material properties

LOADS SUMMARY

ASTM A-53 GB Steel

Heat No.	Yield Strength	Tensile Strength	Supplier
L03116	44.90	69.00	USS
N13170	43.70	69.90	USS
L03732	52.30	79.50	USS
L03995	45.90	72.60	USS
27283	45.96	72.58	YST
23136	47.10	75.74	YST
32759	43.84	70.14	YST
30405	48.97	76.74	YST
23191	58.81	75.14	YST
24359	47.80	76.29	YST
26791	44.20	71.15	YST
29677	45.28	73.58	YST
32765	45.63	68.95	YST
00801	49.40	76.10	USS
12229	45.96	72.58	USS
65266	54.80	85.50	INLAND
65271	51.30	80.00	INLAND
65296	45.00	82.00	INLAND
L01369	47.60	69.20	USS
N11706	43.60	70.90	USS
N11725	44.20	67.20	USS
L86700	49.40	76.10	USS
27283	45.96	72.58	YST
29448	48.02	75.42	YST

Heat No.	Yield Strength	Tensile Strength	Supplier
23780	54.23	74.64	YST
25791	49.82	74.42	YST
32534	51.78	74.52	YST
21322	49.51	75.68	YST
32561	46.83	65.80	YST
27512	47.98	69.72	YST
21737	53.63	74.85	YST
29006	49.65	72.65	YST
32943	49.98	71.91	YST
29009	45.63	68.88	YST
L80783	40.70	70.70	USS
21812	48.44	69.62	YST
430483	47.20	75.40	Phoenix
483211	45.02	65.4	J&L
L61446	43.90	---	USS
N7630	41.10	---	USS
N7921	46.70	---	USS
L61796	49.20	---	USS

Total Number of Samples = 42

Mean, yield strength = 47.64 ksi

Standard deviation = 3.67 ksi

Minimum yield = 40.7 ksi

Maximum yield = 58.81 ksi

DRESDEN GRAPH I

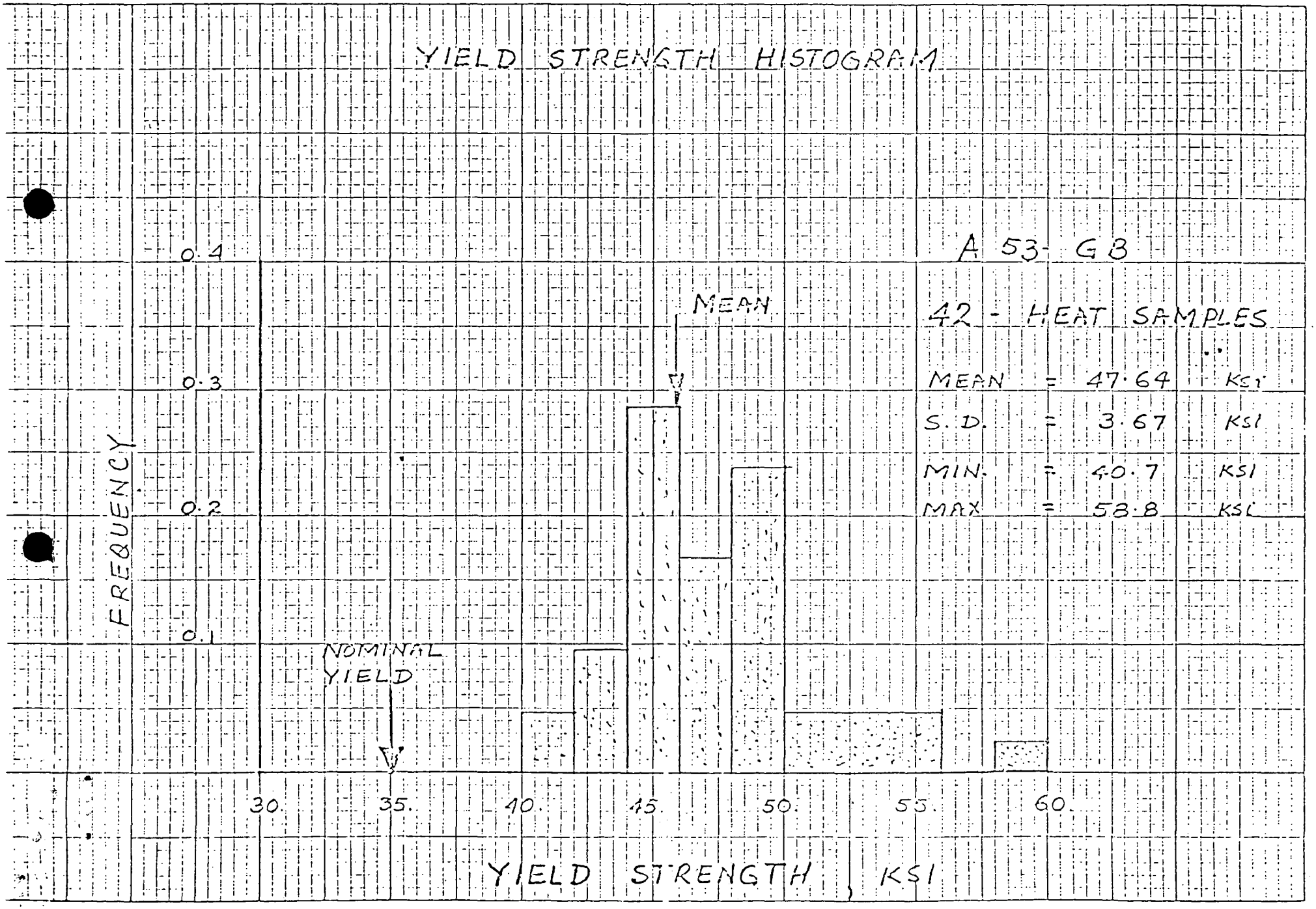

DRESDEN - TABLE III

TORUS UPLIFT

PLANT	RISE HEIGHT (IN)
VERMONT YANKEE ✓	5.44 (1) D.V.
MONTICELLO ✓	* (.13 CALC)
OYSTER CREEK ✓	* (< .13)
NINE MILE POINT	* (<< .13)
MILLSTONE	* (< .13)
PILGRIM ✓	0.497 (1) D.V.
BRUNSWICK	NA (CONCRETE)
COOPER STATION ✓	0.2 (2)
FITSPATRICK	0.2
HATCH 2	0.2
HATCH 1	0.15
DUANE ARNOLD ✓	0.06
BROWNS FERRY	0.05
DRESDEN 283	0.06
QUAD CITIES	0.05
FERMI	0.05
PEACH BOTTOM	0.05 (1) D.V.

* ANCHOR BOLT PLANTS
(1) COMPUTER RUN
(2) INTERPOLATED VALUE
D.V. = DESIGN VERIFIED
✓ = PLANTS CHECKED FOR BREAK SIZE SENSITIVITY

PWI 1/28/76

CORRECTED COPY 2/[illegible]/76 DRESDEN - TABLE IV

Rec'd 4:00 PM

DOWNWARD LOAD

BREAK AREA SENSITIVITY SUMMARY

PLANT	LOAD RATIO (1)	BREAK AREA FRACTION (2)	DBA BREAK, FT^2 (3)	ALLOWABLE BREAK AREA FOR LIQUID (4)
OYSTER CREEK	1.0	.73	4.69	3.44
DRESDEN 2&3	1.1	.57	4.40	2.51
MILLSTONE	1.18 (5)	.53	4.35	2.31
MONTICELLO	1.0	.71	3.90	2.77
COOPER	1.03	.69	4.67	3.22

(1) MAXIMUM DOWN LOAD/ALLOWABLE DOWN LOAD - WORSE CASE.

(2) REDUCTION IN DBA BREAK AREA REQUIRED TO REDUCE LOAD TO 90% OF THE ALLOWABLE LOAD.

(3) DBA AREA USED FOR LOAD EVALUATION.

(4) BREAK AREA FOR VESSEL LIQUID WITH 20 BTU/lb m SUBCOOLING.

(5) INCLUDES CORRECTION FOR REVISED DEPTH-OF-SUBMERGENCE.

2/5/76

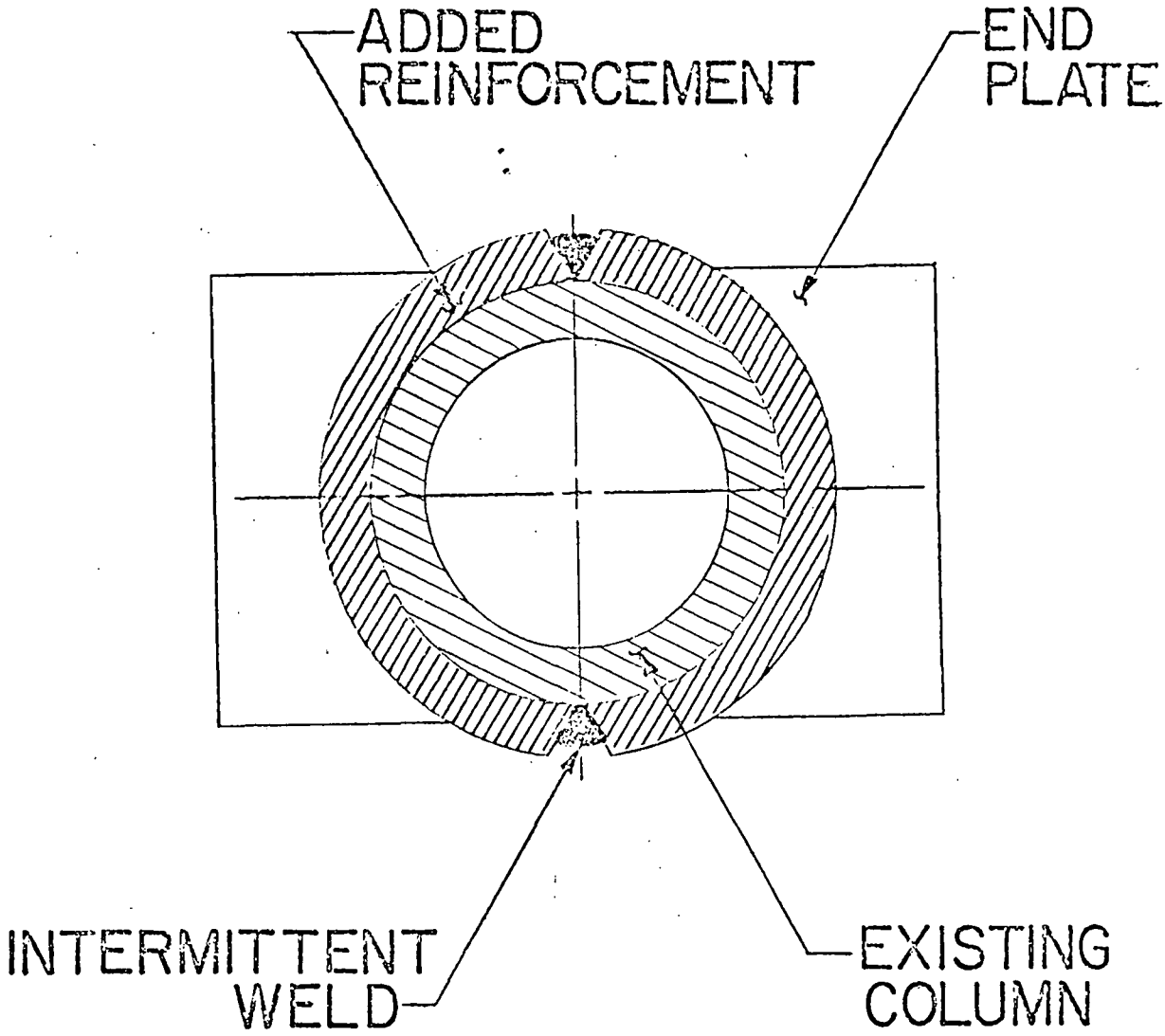

COLUMN REINFORCEMENT

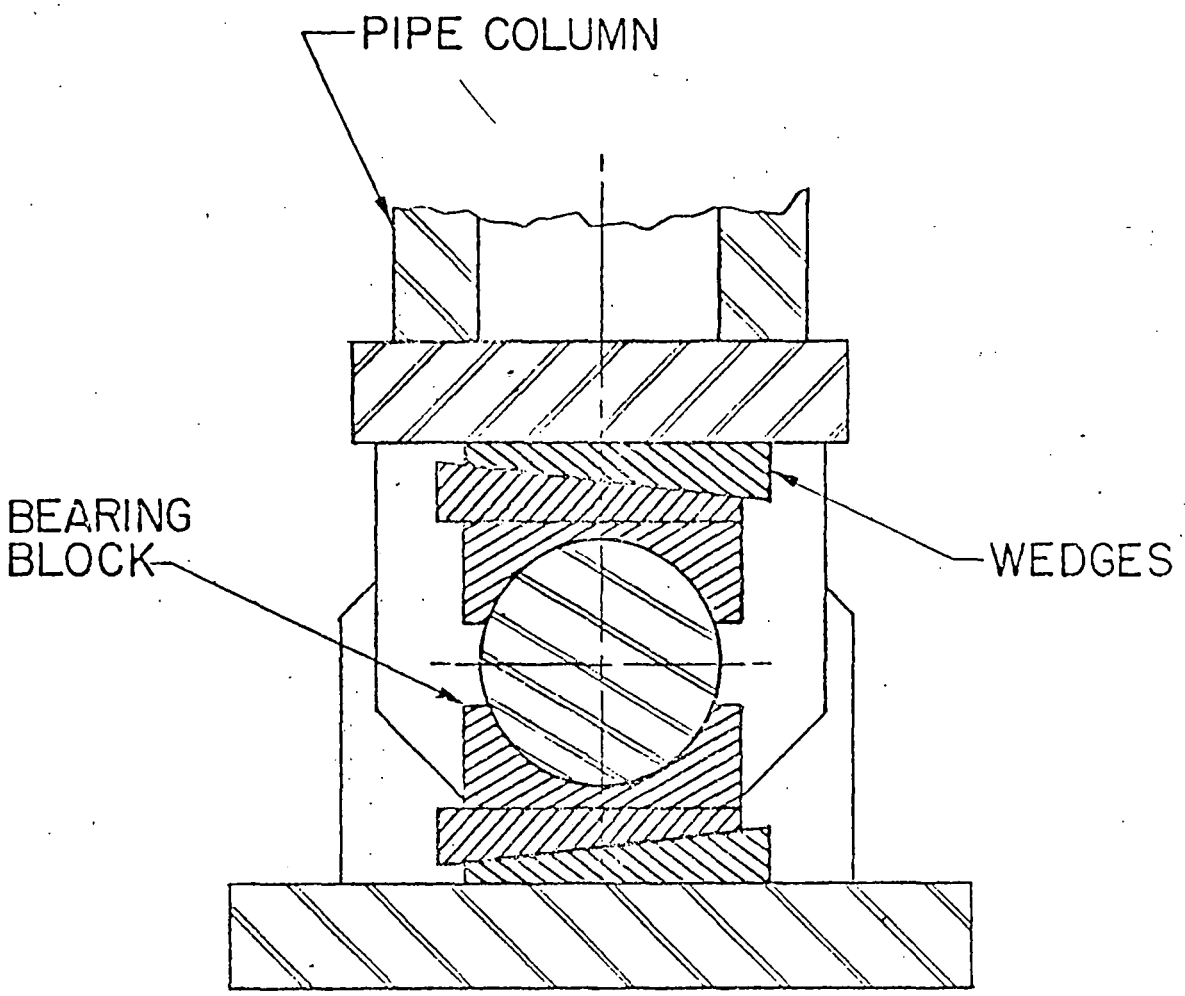

COLUMN PIN CONNECTION

REINFORCEMENT

Commonwealth Edison
One First National Plaza, Chicago, Illinois
Address Reply to: Post Office Box 767
Chicago, Illinois 60690

January 9, 1976

Mr. Richard H. Vollmer, Chief
Quality Assurance Branch
Division of Reactor Licensing
U.S. Nuclear Regulatory Commission
Washington, D.C. 20555

Subject: Commonwealth Edison Company
Quality Assurance Program Topical Report
NRC Dkts. 50-10, 50-237, 50-249, 50-254,
50-265, 50-295, 50-304, 50-373, 50-374,
50-454, 50-455, 50-456, and 50-457

Dear Mr. Vollmer:

Attached is the subject topical report which describes the Commonwealth Edison Company Quality Assurance Program for all phases of nuclear power plant construction and operation. Your letter of December 29, 1975 to Mr. W. B. Behnke reported the subject acceptable, and it is our intent to reference this topical report as the Quality Assurance Program description for existing and future NRC dockets.

One (1) signed original and 69 copies of the subject report are submitted for your review.

Very truly yours,

G. A. Abrell
Nuclear Licensing Administrator
Boiling Water Reactors

Attachment