AEP
INDIANA MICHIGAN POWER®
A unit of American Electric Power

Indiana Michigan Power
Cook Nuclear Plant
One Cook Place
Bridgman, MI 49106
IndianaMichiganPower.com

March 24, 2017

AEP-NRC-2017-04
10 CFR 50.90

Docket Nos.: 50-315
50-316

U. S. Nuclear Regulatory Commission
ATTN: Document Control Desk
Washington, D.C. 20555-0001

Donald C. Cook Nuclear Plant, Units 1 and 2
License Amendment Request to Revise Technical Specifications Section 3.7.2, "Steam Generator Stop Valves (SGSVs)"

Reference: NRC Memorandum, "Operability Determination for the Callaway Plant Technical Specifications Requirements When One Main Steam Isolation Valve Actuator Train is Removed from Service." dated October 19, 2006 (ADAMS Accession Number ML061730396).

In accordance with the provisions of Section 50.90 of Title 10 of the Code of Federal Regulations (10 CFR), Indiana Michigan Power Company, the licensee for Donald C. Cook Nuclear Plant (CNP) Units 1 and 2, is submitting a request for an amendment to the Technical Specifications (TS) for CNP, Units 1 and 2.

The proposed amendment would modify (TS) Section 3.7.2, "Steam Generator Stop Valves (SGSVs)," to incorporate the SGSV actuator trains into the Limiting Condition for Operation and provide associated Conditions and Required Actions. In addition, Surveillance Requirement (SR) 3.7.2.2 is revised to clearly identify that the SGSV actuator trains are required to be tested in accordance with the SR.

These changes are considered necessary based on the referenced Nuclear Regulatory Commission (NRC) staff position that SR 3.7.2.2 requires both actuator trains for a single valve to be surveillance tested. The NRC staff position results in declaring an SGSV inoperable with one actuator train inoperable. The Completion Time of 8 hours for an inoperable SGSV due to one inoperable actuator train is not commensurate with the safety significance of an inoperable actuator train. Therefore, new Conditions, Required Actions, and Completion Times for inoperable actuator train(s) are being proposed.

Enclosure 1 to this letter provides an affirmation statement. Enclosure 2 provides an evaluation of the proposed change. Enclosures 3 and 4, of this letter, provide existing Unit 1 and Unit 2 TS pages, respectively, marked up to show the proposed changes. Enclosures 5 and 6, of this letter, provide existing Unit 1 and Unit 2 TS Bases pages, respectively, marked up to show the proposed changes. TS Bases markups are included for information only. Changes to the existing TS Bases, consistent with the technical and regulatory analyses, will be implemented under the Technical Specification Bases Control Program. New clean Unit 1 and Unit 2 TS pages with proposed changes incorporated will be provided to the NRC Licensing Project Manager when requested.

ADD1
NRR

Approval of the proposed amendment is requested in accordance with the normal NRC review schedule for such changes. Once approved, the amendment will be implemented within 90 days. Copies of this letter are being transmitted to the Michigan Public Service Commission and Michigan Department of Environmental Quality, in accordance with the requirements of 10 CFR 50.91.

There are no new regulatory commitments made in this letter. Should you have any questions, please contact Mr. Michael K. Scarpello, Regulatory Affairs Manager, at (269) 466-2649.

Sincerely,

Q. Shane Lies
Site Vice President

JMT/mll

Enclosures:

1. Affirmation
2. Evaluation of the Proposed Changes
3. Donald C. Cook Nuclear Plant Unit 1 Technical Specification Pages Marked To Show Proposed Changes
4. Donald C. Cook Nuclear Plant Unit 2 Technical Specification Pages Marked To Show Proposed Changes
5. Donald C. Cook Nuclear Plant Unit 1 Technical Specification Bases Pages Marked To Show Proposed Changes (For Information Only)
6. Donald C. Cook Nuclear Plant Unit 2 Technical Specification Bases Pages Marked To Show Proposed Changes (For Information Only)

c: R. J. Ancona – MPSC
A. W. Dietrich, NRC Washington, D.C.
MDEQ- RMD/RPS
NRC Resident Inspector
C. D. Pederson, NRC Region III
A. J. Williamson – AEP Ft. Wayne, w/o enclosures

Enclosure 1 to AEP-NRC-2017-04

AFFIRMATION

I, Q. Shane Lies, being duly sworn, state that I am Site Vice President of Indiana Michigan Power Company (I&M), that I am authorized to sign and file this request with the U. S. Nuclear Regulatory Commission on behalf of I&M, and that the statements made and the matters set forth herein pertaining to I&M are true and correct to the best of my knowledge, information, and belief.

Indiana Michigan Power Company

Q. Shane Lies
Site Vice President

SWORN TO AND SUBSCRIBED BEFORE ME

THIS 24 DAY OF March, 2017

Notary Public

My Commission Expires 04-04-2018

DANIELLE BURGOYNE
Notary Public, State of Michigan
County of Berrien
My Commission Expires 04-04-2018
Acting in the County of Berrien

Enclosure 2
Evaluation of Proposed Changes

Subject: License Amendment Request to Revise Technical Specifications Section 3.7.2, "Steam Generator Stop Valves (SGSVs)"

1.0 SUMMARY DESCRIPTION

This evaluation supports a request to amend Facility Operating License Nos. DPR-58 and DPR-74 for Donald C. Cook Nuclear Plant, Units 1 and 2, respectively.

Indiana Michigan Power Company (I&M), the licensee for Donald C. Cook Nuclear Plant (CNP) Units 1 and 2, proposes to revise Technical Specifications (TS) Section 3.7.2, "Steam Generator Stop Valves (SGSVs)," to incorporate the SGSV actuator trains into the Limiting Condition for Operation (LCO) and provides associated Conditions and Required Actions. Additionally, Surveillance Requirement (SR) 3.7.2.2 is revised to clearly identify that the SGSV actuator trains are required to be tested in accordance with the SR.

The proposed changes address a Nuclear Regulatory Commission (NRC) staff position that SR 3.7.2.2 requires both actuator trains for a single valve to be tested (Reference 1). The NRC staff position results in declaring an SGSV inoperable when one actuator train is inoperable. The existing Completion Time of 8 hours for an inoperable SGSV due to one inoperable actuator train is not commensurate with the safety significance of the condition. Therefore, new Conditions, Required Actions, and Completion Times for inoperable actuator train(s) are being proposed.

2.0 DETAILED DESCRIPTION

TS 3.7.2, "Steam Generator Stop Valves (SGSVs)," specifies operability and SR for the SGSVs, which includes Conditions and Required Actions to be entered when one or more SGSVs are inoperable. Currently, TS 3.7.2 does not specifically address or reflect the two independent actuator trains for one SGSV. Inoperability of one of the two actuator trains associated with an SGSV does not by itself make the valve incapable of closing since the remaining OPERABLE actuator train can alone effect valve closure on demand. Declaring an SGSV inoperable and entering the Condition(s) and Required Action(s) for an inoperable SGSV due only to one inoperable actuator train, is unnecessarily restrictive. Therefore, I&M proposes to incorporate requirements specifically for the SGSV actuator trains within TS 3.7.2 such that the specification would include appropriate Conditions and Required Actions to address inoperable SGSV actuator trains.

Consistent with other Improved Standard Technical Specifications format, the proposed Completion Times for inoperable SGSV actuator trains are based on a hierarchy of Conditions such that shorter Completion Times would be specified for increasingly degraded conditions. Conditions addressing inoperable actuator trains would be specified first in TS 3.7.2, (i.e., listed before the Conditions that are currently in place for addressing inoperability of the SGSVs themselves). Therefore, TS 3.7.2 specifies that when only an actuator train is declared inoperable, the applicable Condition for the inoperable actuator train would be entered first. Then, depending on the number of actuator trains that are concurrently inoperable and the associated Required Action for the applicable Condition, or if the applicable Required Action and Completion Time cannot be met, the SGSV(s) associated with the inoperable actuator train(s) would be declared inoperable so that the Condition(s) addressing inoperability of the SGSV(s) would thus be entered.

The following proposed changes will revise TS 3.7.2:

- LCO 3.7.2 is revised to include the actuator trains in the LCO. LCO 3.7.2 is revised to state "Four SGSVs and their associated actuator trains shall be OPERABLE."

- New Conditions A through E are added to TS 3.7.2 to address inoperable SGSV actuator trains. The existing Conditions that address inoperable valves are relabeled such that those Conditions would become Conditions F through I for TS 3.7.2. The proposed new Conditions related specifically to the actuator trains would address various degrees or combinations of inoperable actuator trains as follows:

    - New Condition A would address the condition of having one SGSV actuator train inoperable (for a single valve). The proposed Required Action for this Condition would require restoring the inoperable actuator train to OPERABLE status within 7 days.

    - New Condition B would address the condition of having two SGSV actuator trains inoperable for different valves (i.e., one actuator train inoperable for each of two SGSVs) such that the actuator trains are not in the same Engineered Safety Features (ESF) Train. The proposed Required Action for this Condition would require restoring at least one actuator train to OPERABLE status within 72 hours.

    - New Condition C would address the situation when two SGSV actuator trains are inoperable for different valves and the inoperable actuator trains are both in the same ESF Train. The proposed Required Action for this Condition would require restoring at least one actuator train to OPERABLE status within 24 hours.

    - New Condition D would address the situation when both actuator trains for one SGSV are inoperable. The Required Action proposed for this Condition would require immediately declaring the affected SGSV inoperable.

    - New Condition E would address the condition of having three or more SGSV actuator trains inoperable, or the condition when, after entering Conditions A, B, or C, it is determined that the Required Action and Completion Time of any of those Conditions cannot be met. The Required Action for this Condition would require immediately declaring each affected SGSV inoperable.

- SR 3.7.2.2 is revised to clearly identify that the SGSV actuator trains are required to be tested in accordance with the SR. SR 3.7.2.2 is revised to state: "Verify each actuator train actuates the SGSV to the isolation position on an actual or simulated actuation signal."

Enclosures 3 and 4 provide the marked up TS pages for CNP Units 1 and 2, respectively, for the proposed changes.

Enclosures 5 and 6 include the marked up TS Bases pages associated with the proposed changes and are provided for information only.

3.0 TECHNICAL EVALUATION

Background

On July 13, 2006, at a NRC inspection exit meeting, the NRC identified a potential Green finding and associated non-cited violation for Wolf Creek for a violation of TS 3.7.2 in that a Main Steam Isolation Valve (MSIV) was not restored to OPERABLE status within the 8 hour Completion Time as required by TS 3.7.2, Required Action A.1. Shortly after the exit meeting, the licensee requested a meeting with the NRC staff to present information regarding the Wolf Creek analyses and compliance with TS. The licensee was notified subsequent to the exit meeting and prior to a meeting with the NRC staff that the potential Green finding and associated non-cited violation was being withdrawn pending further review.

On August 16, 2006, Wolf Creek personnel met with the NRC staff (Nuclear Reactor Regulation and Region IV personnel) to provide information on the MSIV operation, design bases, safety analyses, and TS. Due to a discussion associated with their own previously submitted License Amendment Request (Reference 2), Callaway personnel were also involved with this meeting. The meeting was an informational meeting and the NRC did not provide a specific position at the meeting (Reference 3).

On August 21, 2006, the NRC Project Manager communicated to Wolf Creek personnel that the NRC position on SR 3.7.2.2 is that the SR requires both actuator trains be surveillance tested. SR 3.0.1 requires SRs to be met and that failure to meet a SR, whether such failure is experienced during the performance of the SR or between performances of the SR, shall be a failure to meet the LCO. Therefore, the failure of an actuator train is a failure to meet the SR which results in LCO 3.7.2 not being met and the MSIV should be declared inoperable absent any specific Conditions associated to actuator trains.

On October 19, 2006, the NRC concluded in a memorandum (Reference 1) that the loss of an MSIV actuator train would result in Callaway having to declare the associated MSIV inoperable.

The NRC staff position results in declaring an MSIV inoperable for those plants with dual MSIV actuator trains when one actuator train is inoperable. The existing Completion Time (8 hours) for an inoperable MSIV does not typically provide a reasonable amount of time to effect repairs to one inoperable actuator train and failure to meet the Completion Time requires a unit shutdown. Declaring an MSIV inoperable and having to enter the Condition(s) and Required Action(s) for an MSIV inoperable due to only one inoperable actuator train is unnecessarily restrictive. Therefore, I&M proposes to incorporate requirements specifically for the SGSV actuator trains within TS 3.7.2 such that the specification would include Conditions, Required Actions, and Completion Times to address inoperable SGSV actuator trains, which are consistent with the precedents included in Section 4.2.

Technical Analysis

Steam Generator Stop Valves (SGSVs)

A typical SGSV arrangement is shown in a figure at the end of this enclosure. The SGSVs isolate steam flow from the secondary side of the steam generators following a steam line

isolation signal. One SGSV is installed in each of the main steam lines outside the containment and downstream of the main steam safety valves. The SGSVs prevent uncontrolled blowdown from more than one steam generator in the event of a postulated design basis accident. Each SGSV is a gate valve with a double gate design that is normally hydraulically operated. As described in the Updated Final Safety Analysis Report (UFSAR), the valve is designed to close in less than 11 seconds based on the limiting accident of a steam line break outside the containment to limit cool down rate of the reactor coolant system.

Each SGSV is equipped with two redundant air operated actuator trains such that either actuator train can independently perform the safety function to fast-close the valve on demand. The SGSVs are interlocked with the ESF system to auto close on the following main steam line isolation signals: Containment Pressure - High High signal, High Steam Flow in Two Steam Lines Coincident with T_{avg} - Low Low, and Steam Line Pressure - Low. In addition, emergency closure can be initiated by operator actuation of the dump valves in the SGSV Control System. The SGSVs fail closed on loss of control air and fail as-is on loss of DC control power.

SGSV Actuator Train

The CNP Stations' SGSV configuration consists of four valves per unit with one valve per loop. The SGSVs are hydraulically actuated double disk gate valves. The actuator system is designed to provide a rapid closure in the event of a receipt of an isolation signal. The electrical design of the SGSV control circuit has independent and redundant actuator components. Both trains are activated by the main steam line isolation signals. Each train is powered from a separate ESF Train that is actuated by a separate and independent SGSV emergency closure signal.

For each SGSV, the Train A actuator train is powered by the Train A ESF bus. The Train B actuator trains are powered by the Train B ESF bus. Both SGSV actuator trains (active and standby) will receive automatic closure signals on Containment Pressure - High High signal, High Steam Flow in Two Steam Lines Coincident with T_{avg} - Low Low, and Steam Line Pressure - Low.

A SGSV is installed in each main steam lead downstream of the safety valves. This valve is capable of closing against flow in either direction so that in the case of a steam line rupture, only the affected steam generator would be blown down. This valve consists of a parallel slide valve with a piston attached to the valve spindle. The piston is housed within a cylinder which is an integral part of the valve body. Mounted on top of the stem cylinder is a hydraulic cylinder connected to the valve spindle. During normal operation, the valve remains open because the steam piston is balanced with equal steam pressure on both sides. Normal valve opening and closing is done with the hydraulic system. Emergency valve closures are achieved by venting the steam above the steam piston to atmosphere.

Steam venting for emergency closures is through a 3-way motor operated valve and through two air operated valves. During unit operation, all ports of the 3-way valve are open (valve in mid-position) and the two air operated valves are closed. By opening either air operated valve, steam is vented to atmosphere and the stop valve closes. Two air operated valves are provided for redundancy and fail open upon loss of air pressure. The 3-way motor operated valve allows isolating each of the air operated valves for testing without causing the stop valves to close.

Because of complete redundancy (i.e., independent active train and standby train components), the actuator is capable of performing its fast closure function with either one of the two trains. Assuming a single failure of one of the redundant actuator trains, the valve will close within 11 seconds.

The actuator train does not include any portion of the analog channels or protection system actuation logic and actuation relays that provide inputs to the valve actuator trains. The Engineered Safety Features Actuation System ESFAS Instrumentation specification provides separate Conditions, Required Actions, and SR for the analog channels and protection system logic and relays.

Justification for the Completion Times is as follows:

- Condition A - With only a single actuator train inoperable on one SGSV, a Completion Time of 7 days for Required Action A.1 is reasonable due to the fact that with one actuator train inoperable and the dual-redundant actuator design, the affected valve would still be capable of closing on demand (assuming no additional failures) via the remaining OPERABLE actuator train. The proposed 7 day Completion Time takes into account the design redundancy, reasonable time for repairs, and the low probability of a design basis accident occurring during this period.

- Condition B - With one inoperable actuator train on one SGSV and one inoperable actuator train on another SGSV, such that the actuator trains are not in the same ESF Train, a Completion Time of 72 hours for Required Action B.1 is reasonable. This is based on the dual-redundant actuator train design which ensures that with only one actuator train inoperable on each of the affected SGSVs, each SGSV would still be capable of closing on demand, assuming no additional failures. Compared to Condition A however, it is appropriate to have a shorter Completion Time for Condition B since with an actuator train inoperable on each of two SGSVs, there is an increased probability that an additional failure (such as the failure of an actuation logic train) would cause an SGSV to fail to close.

- Condition C - With one inoperable actuator train on one SGSV and one inoperable actuator train on another SGSV, but with both inoperable actuator trains in the same ESF Train, a Completion Time of 24 hours for Required Action C.1 is appropriate. Like the above cases, the dual-redundant actuator train design for each SGSV ensures that a single inoperable actuator train for any valve would not prevent the affected valve from closing on demand. In this regard, a 24 hour Completion Time is reasonable and conservative since only one actuator train per valve is permitted to be inoperable (for two SGSVs), so that the remaining OPERABLE actuator train on each affected SGSV remains capable of effecting valve closure on demand (assuming no additional failures). A Completion Time of 24 hours is also considered appropriate given the low probability of an event occurring during such an interval that would demand SGSV closure. However, compared to the Required Action for Condition B above, a shorter Completion Time for Condition C is appropriate since with two actuator trains inoperable in the same ESF Train, an additional failure such as the failure of an actuation logic train in the other ESF Train could cause both affected SGSVs to fail to close on demand.

- For Conditions D and E, the Completion Time of "immediately" is conservative and appropriate. For Condition D, for example, when both actuator trains for one SGSV are inoperable, it is appropriate to require immediately declaring the valve inoperable since having both actuator trains inoperable would constitute a condition that renders the affected SGSV incapable of closing on demand.

With respect to Condition E, for the Condition when the Required Action and associated Completion Time of Condition A, B, or C is not met, it follows that the affected SGSV(s) should immediately be declared inoperable since the assumption is that the Completion Time(s) of Condition A, B, or C has expired or cannot be met. This "default" Condition is in keeping with the intent that when only the actuator trains for affected SGSVs are inoperable (and not the valves themselves), the Conditions and Required Actions for the inoperable valve actuator trains should be entered first, and then if those Required Actions cannot be met, the affected SGSVs should be declared inoperable so that the Conditions and Required Actions for the inoperable valves are then entered. Required Action E.1 ensures the affected SGSV(s) are promptly declared inoperable. This format or approach is consistent with other TS and the format of the Improved Standard Technical Specifications (NUREG-1431).

For the other portion of Condition E; i.e., for the condition when three or more actuator trains are inoperable, it is conservative and appropriate as well to immediately declare the affected SGSVs inoperable for this condition. For the situation of having three inoperable actuator trains, for example, such a condition could involve two inoperable actuator trains on one valve and one inoperable actuator train on another valve, or one inoperable actuator train on each of three valves. In each case, the inoperable actuator trains could all be in the same ESF Train or be staggered among the two ESF Trains. In the former case, a single assumed failure such as an instrument logic train failure could cause one or two valves to fail to close on demand. In the latter case, such a single failure could cause either none of the valves to fail to close on demand, or all three to fail to close on demand. Thus, immediately declaring the affected SGSVs inoperable is appropriate. In any case, the conditions addressed by Condition E would constitute an inoperability that exceeds the scope of any of the conditions addressed by Conditions A, B, or C, and it is conservative in this case to require declaring all of the affected SGSVs inoperable.

The SR Bases 3.7.2.2 is revised to clearly identify that the SGSV actuator trains are required to be tested in accordance with the SR. Since the current SR does not clearly articulate applicability to the actuator trains and the NRC staff position is that the actuator trains are encompassed within the SR, a revision to the SR Bases to clarify this point is appropriate.

A probabilistic risk analysis was performed to evaluate the risk impacts of the proposed Completion Times associated with the SGSV actuator trains. This risk analysis was not used to establish the proposed Completion Times; however, it was used to validate the acceptability of the proposed Completion Times. The risk analysis followed the guidance suggested in Regulatory Guide (RG) 1.174 and RG 1.177 to determine the significance of the proposed Completion Times.

The risk analysis examined two sets of risk metrics, which are the change in annual average core damage frequency (CDF)/large early release frequency (LERF), and the incremental conditional core damage probability (ICCDP)/incremental conditional large early release

probability (ICLERP). The risk analysis modeled the allowed outage times proposed as Completion Times for TS Conditions A, B, and C. The calculation used in the analysis represented the proposed Completion Times for each condition's configuration over the fuel cycle for each unit.

Based on the analysis, the risk metrics results for each CNP unit are below the recommended values of RG 1.174 and RG 1.177 as shown in the following table, which demonstrates that the risk of the proposed Completion Times are acceptable.

Proposed Completion Times Risk Results

Risk Metric	Target	CNP Unit 1	CNP Unit 2
ΔCDF	1.0E-06	6.29E-07	6.35E-07
ΔLERF	1.0E-07	1.77E-08	1.67E-08
ICCDP	5.0E-07	1.85E-09	1.91E-09
ICLERP	5.0E-08	8.54E-11	7.70E-11

4.0 REGULATORY EVALUATION

4.1 Applicable Regulatory Requirements/Criteria

The following NRC requirements and guidance documents are applicable to the review of the proposed changes.

Regulatory Requirements

10 CFR 50.36(c)(2)(ii), stipulates that a TS LCO must be established for each item meeting one or more of the following criteria:

1. Installed instrumentation that is used to detect, and indicate in the control room, a significant abnormal degradation of the reactor coolant pressure boundary.
2. A process variable, design feature, or operating restriction that is an initial condition of a design basis accident (DBA) or transient analysis that either assumes the failure of, or presents a challenge to the integrity of a fission product barrier.
3. A structure, system, or component that is part of the primary success path and which functions or actuates to mitigate a DBA or transient that either assumes the failure of or presents a challenge to the integrity of a fission product barrier.
4. A structure, system, or component which operating experience or probabilistic risk assessment has shown to be significant to public health and safety.

The Required Actions for changing the units Mode of operation as a result of one or more SGSVs being inoperable are included in the TS in accordance with 10 CFR 50.36(c)(2), "Limiting Conditions for Operation", criteria #3.

As described in UFSAR Section 1.4, the Plant Specific Design Criteria (PSDC) define the principal criteria and safety objectives for the CNP design. The following PSDC are relevant to the proposed amendment:

PSDC CRITERION 2 Performance Standards

> Those structures, systems and components of reactor facilities which are essential to the prevention, or to the mitigation of the consequences, of nuclear accidents which could cause undue risk to the health and safety of the public shall be designed, fabricated, and erected to performance standards that enable such structures, systems and components to withstand, without undue risk to the health and safety of the public, the forces that might reasonably be imposed by the occurrence of an extraordinary natural phenomenon such as earthquake, tornado, flooding condition, high wind or heavy ice. The design bases so established shall reflect: (a) appropriate consideration of the most severe of these natural phenomena that have been officially recorded at the site and the surrounding area and (b) an appropriate margin for withstanding forces greater than those recorded to reflect uncertainties about the historical data and their suitability as a basis for design.

PSDC CRITERION 19 Protection Systems Reliability

> Protection Systems shall be designed for high functional reliability and in-service testability necessary to avoid undue risk to the health and safety of the public.

PSDC CRITERION 20 Protection Systems Redundancy and Independence

> Redundancy and independence designed into protection systems shall be sufficient to assure that no single failure or removal from service of any component or channel of such a system will result in loss of the protection function. The redundancy provided shall include, as a minimum, two channels of protection for each protection function to be served.

PSDC CRITERION 23 Protection Against Multiple Disability for Protection Systems

> The effects of adverse conditions, to which redundant channels or protection systems might be exposed in common, either under normal conditions or those of an accident, do not result in loss of the protection function or shall be tolerable on some other basis.

PSDC CRITERION 25 Demonstration of Functional Operability of Protection Systems

> Means shall be included for suitable testing of the active components of protection systems while the reactor is in operation to determine if failure or loss of redundancy has occurred.

The proposed changes do not affect the SGSVs and associated actuator train design and operation, which continue to meet all the PSDC requirements. The proposed TS changes are consistent with and in compliance with the above regulatory requirements and criteria.

Therefore, the proposed changes will assure safe operation by continuing to meet applicable regulations and requirements

4.2 Precedents

The NRC has approved similar license amendment requests to revise TS for main steam isolation valves actuator trains as follows:

1. Letter from Jack Donohew (NRC) to Charles Naslund (Union Electric Company), "Callaway Plant, Unit 1 - Issuance of Amendment Re: Main Steam Isolation Valve Actuator Trains (TAC No. MC7212)," dated June 16, 2006, (ADAMS Accession Number ML060810169).

2. Letter from Jack Donohew (NRC) to Rick Muench (Wolf Creek Nuclear Operating Corporation), "Wolf Creek Generating Station - Issuance of Amendment Re: Addition of Actuator Trains to Main Steam and Feedwater Isolation Valves Technical Specifications (TAC No. MD2895)," dated November 7, 2006, (ADAMS Accession Number ML062610085).

3. Letter from Jack Donohew (NRC) to James Levine (Arizona Public Service Company), "Palo Verde Nuclear Generating Station, Units 1, 2, and 3 - Issuance of Amendments Re: Main Steam Isolation Valve Actuator Trains (TAC Nos. MD3066, MD3067, and MD3068)," dated November 17, 2006, (ADAMS Accession Number ML063110505)

4. Letter from Joel Wiebe (NRC) to Bryan Hanson (Exelon Generation Company), "Braidwood Station, Units 1 and 2 and Byron Station, Unit Nos. 1 and 2 – Issuance of Amendments Regarding Main Steam Isolation Valve Technical Specifications (TAC Nos. MF2643, MF2644, MF2645, and MF2646)," dated January 30, 2015, (ADAMS Accession Number ML15007A555)

4.3 No Significant Hazards Consideration

In accordance with 10 CFR 50.90, Indiana Michigan Power Company (I&M), the licensee for Donald C. Cook Plant (CNP) Units 1 and 2, is requesting amendments to Facility Operating License Nos. DPR-58 and DPR-74 for CNP, Units 1 and 2, respectively.

The proposed changes will revise Technical Specification (TS) 3.7.2, "Steam Generator Stop Valves (SGSVs)," to incorporate the SGSV actuator trains into the Limiting Condition for Operation and provides associated Conditions and Required Actions. Additionally, Surveillance Requirement (SR) 3.7.2.2 is revised to clearly identify that the SGSV actuator trains are required to be tested in accordance with the SR. The proposed changes will address Nuclear Regulatory Commission (NRC) staff position that SR 3.7.2.2 requires both actuator trains for a single valve to be tested. The NRC staff position results in declaring an SGSV inoperable when one actuator train is inoperable. The existing Completion Time of 8 hours for an inoperable SGSV due to one inoperable actuator train is not commensurate with the safety significance of the condition. Therefore, new Conditions, Required Actions, and Completion Times for inoperable actuator train(s) are being proposed.

I&M has evaluated whether or not a significant hazards consideration is involved with the proposed amendment by focusing on the three standards set forth in 10 CFR 50.92(c), "Issuance of Amendment," as discussed below:

1. Does the proposed amendment involve a significant increase in the probability or consequences of an accident previously evaluated?

   Response: No.

   The proposed changes provide requirements for SGSVs that have dual actuators which receive signals from separate instrumentation trains. The design and functional performance requirements, operational characteristics, and reliability of the SGSVs and actuator trains are unchanged. There is no impact on the design safety function of the SGSVs to close (as an accident mitigator), nor is there any change with respect to inadvertent closure of an SGSV (as a potential transient initiator). Since no failure mode or initiating condition that could cause an accident (including any plant transient) is created or affected, the change cannot involve a significant increase in the probability of an accident previously evaluated.

   With regard to the consequences of an accident and the equipment required for mitigation of the accident, the proposed changes involve no design or physical changes to the SGSVs or any other equipment required for accident mitigation. With respect to SGSV actuator train Completion Times, the consequences of an accident are independent of equipment Completion Times as long as adequate equipment availability is maintained. The proposed SGSV actuator Completion Times take into account the redundancy of the actuator trains and are limited in extent consistent with other Completion Times specified in the TS. Adequate equipment availability would therefore continue to be required by the TS. On this basis, the consequences of applicable, analyzed accidents are not significantly affected by the proposed changes.

Therefore, the proposed changes do not involve a significant increase in the probability or consequences of an accident previously evaluated.

2. Does the proposed amendment create the possibility of a new or different kind of accident from any accident previously evaluated?

   Response: No.

   The proposed changes to incorporate requirements for the SGSV actuator trains in TS 3.7.2 do not involve any design or physical changes to the facility, including the SGSVs and actuator trains themselves. No physical alteration of the plant is involved, as no new or different type of equipment is to be installed. The proposed changes do not alter any assumptions made in the safety analyses, nor do they involve any changes to plant procedures for ensuring that the plant is operated within analyzed limits. As such, no new failure modes or mechanisms that could cause a new or different kind of accident from any previously evaluated are being introduced.

   Therefore, the proposed changes do not create the possibility of a new or different kind of accident from any accident previously evaluated.

3. Does the proposed amendment involve a significant reduction in margin of safety?

   Response: No.

   The proposed changes to incorporate requirements for the SGSV actuator trains do not alter the manner in which safety limits or limiting safety system settings are determined. No changes to instrument/system actuation setpoints are involved. The safety analysis acceptance criteria are not affected by this change and the proposed changes will not permit plant operation in a configuration outside the design basis.

   Therefore, the proposed changes do not involve a significant reduction in a margin of safety.

   Based on the above, I&M concludes that the proposed amendments do not involve a significant hazards consideration under the standards set forth in 10 CFR 50.92(c), and, accordingly, a finding of no significant hazards consideration is justified.

4.4 Conclusions

In conclusion, based on the considerations discussed above, (1) there is reasonable assurance that the health and safety of the public will not be endangered by operation in the proposed manner, (2) such activities will be conducted in compliance with the Commission's regulations, and (3) the issuance of the amendment will not be inimical to the common defense and security or to the health and safety of the public.

5.0 ENVIRONMENTAL CONSIDERATION

I&M has evaluated the proposed amendments for environmental considerations. The review has resulted in the determination that the proposed amendment would change a requirement

with respect to installation or use of a facility component located within the restricted area, as defined in 10 CFR 20, or would change an inspection or surveillance requirement. However, the proposed amendments do not involve (i) a significant hazards consideration, (ii) a significant change in the types or significant increase in the amounts of any effluent that may be released offsite, or (iii) a significant increase in individual or cumulative occupational radiation exposure. Accordingly, the proposed amendments meet the eligibility criterion for categorical exclusion set forth in 10 CFR 51.22(c)(9). Therefore, pursuant to 10 CFR 51.22(b), no environmental impact statement or environmental assessment need be prepared in connection with the proposed amendments.

6.0 REFERENCES

1. NRC Memorandum, "Operability Determination for the Callaway Plant Technical Specifications Requirements When One Main Steam Isolation Valve Actuator Train is Removed from Service," dated October 19, 2006 (ADAMS Accession Number ML061730396).

2. Letter from Keith D. Young (Ameren Union Electric) to U.S. Nuclear Regulatory Commission (NRC) Document Control Desk, "Callaway Plant Union Electric Company License Amendment Request OL-1262 Revision to Technical Specification (TS) 3.7.2, "Main Steam Isolation Valves (MSIVs)," to Add Conditions for Inoperable MSIV Actuator Trains," dated May 26, 2005 (ADAMS Accession Number ML051590442).

3. Summary of August 16, 2006, Meeting with Representatives of Wolf Creek Nuclear Operating Corporation and Union Electric Company dated September 20, 2006 (ADAMS Accession Number ML062410484).

Steam Generator Stop Valve (typical)

For Information Only

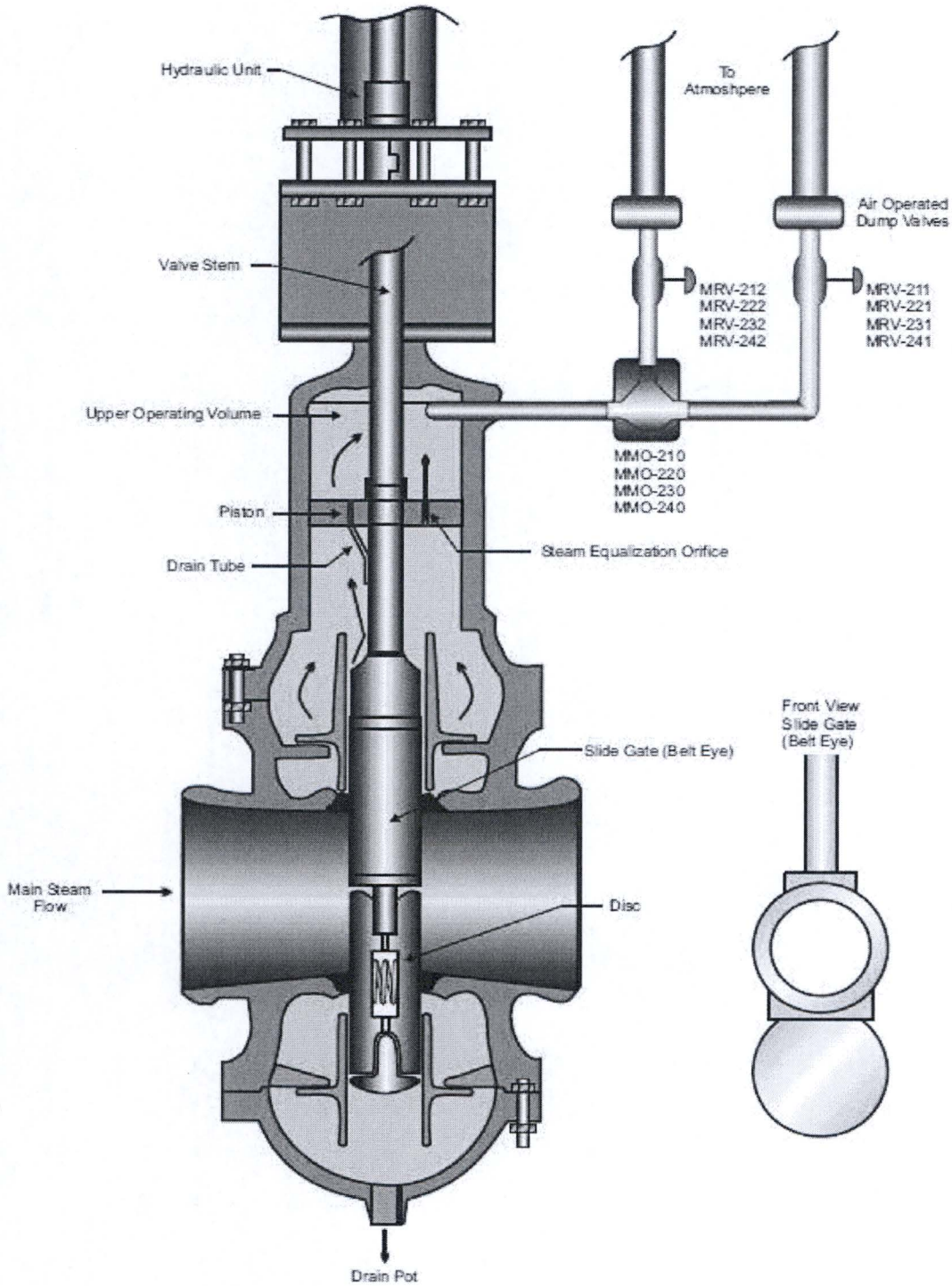

Enclosure 3 to AEP-NRC-2017-04

Donald C. Cook Nuclear Plant Unit 1 Technical Specification Pages Marked To Show Proposed Changes

3.7.2-1
3.7.2-2

3.7 PLANT SYSTEMS

3.7.2 Steam Generator Stop Valves (SGSVs)

LCO 3.7.2 Four SGSVs and their associated actuator trains shall be OPERABLE.

APPLICABILITY: MODE 1,
MODES 2 and 3 except when all SGSVs are closed.

ACTIONS

CONDITION	REQUIRED ACTION	COMPLETION TIME
Insert 1 ~~A.~~ One SGSV inoperable in MODE 1. F	~~A.1~~ Restore SGSV to OPERABLE status.	8 hours
~~B.~~ Required Action and associated Completion Time of Condition ~~A~~ not met. F	~~B.1~~ Be in MODE 2. G	6 hours
H ~~C.~~ ----------NOTE---------- Separate Condition entry is allowed for each SGSV. ---------- One or more SGSVs inoperable in MODE 2 or 3.	~~C.1~~ Close SGSV. AND H ~~C.2~~ Verify SGSV is closed.	8 hours Once per 7 days
I ~~D.~~ Required Action and associated Completion Time of Condition ~~C~~ not met. H	~~D.1~~ Be in MODE 3. AND I ~~D.2~~ Be in MODE 4.	6 hours 12 hours

SURVEILLANCE REQUIREMENTS

SURVEILLANCE		FREQUENCY
SR 3.7.2.1	----------NOTE---------- Only required to be performed in MODES 1 and 2. ---------- Verify the isolation time of each SGSV is within limits.	In accordance with the Inservice Testing Program
SR 3.7.2.2	----------NOTE---------- Only required to be performed in MODES 1 and 2. ---------- actuator train actuates the Verify each SGSV ~~actuates~~ to the isolation position on an actual or simulated actuation signal.	24 months

INSERT 1

CONDITION	REQUIRED ACTION		COMPLETION TIME
A. One SGSV actuator train inoperable.	A.1	Restore SGSV actuator train to OPERABLE status.	7 days
B. Two SGSVs each with one actuator train inoperable such that the inoperable actuator trains are in different ESF Divisions.	B.1	Restore one SGSV actuator train to OPERABLE status.	72 hours
C. Two SGSVs each with one actuator train inoperable and both inoperable actuator trains are in the same ESF Division.	C.1	Restore one SGSV actuator train to OPERABLE status.	24 hours
D. Two SGSV actuator trains inoperable on the same SGSV.	D.1	Declare the affected SGSV inoperable.	Immediately
E. Three or more SGSV actuator trains inoperable. <u>OR</u> Required Action and associated Completion Time of Condition A, B, or C not met.	E.1	Declare each affected SGSV inoperable.	Immediately

Enclosure 4 to AEP-NRC-2017-04

Donald C. Cook Nuclear Plant Unit 2 Technical Specification Pages Marked To Show Proposed Changes

3.7.2-1
3.7.2-2

3.7 PLANT SYSTEMS

3.7.2 Steam Generator Stop Valves (SGSVs)

LCO 3.7.2 Four SGSVs and their associated actuator trains shall be OPERABLE.

APPLICABILITY: MODE 1,
MODES 2 and 3 except when all SGSVs are closed.

ACTIONS

CONDITION	REQUIRED ACTION	COMPLETION TIME
Insert 1 ~~A.~~ One SGSV inoperable in MODE 1. F	~~A.~~1 Restore SGSV to OPERABLE status.	8 hours
~~B.~~ Required Action and associated Completion Time of Condition ~~A~~ not met. F	~~B.~~1 Be in MODE 2. G	6 hours
H ~~C.~~ ----------NOTE---------- Separate Condition entry is allowed for each SGSV. ---------- One or more SGSVs inoperable in MODE 2 or 3.	~~C.~~1 Close SGSV. AND H ~~C.~~2 Verify SGSV is closed.	8 hours Once per 7 days
I ~~D.~~ Required Action and associated Completion Time of Condition ~~C~~ not met. H	~~D.~~1 Be in MODE 3. AND I ~~D.~~2 Be in MODE 4.	6 hours 12 hours

SURVEILLANCE REQUIREMENTS

SURVEILLANCE		FREQUENCY
SR 3.7.2.1	----------NOTE---------- Only required to be performed in MODES 1 and 2. ---------- Verify the isolation time of each SGSV is within limits.	In accordance with the Inservice Testing Program
SR 3.7.2.2	----------NOTE---------- Only required to be performed in MODES 1 and 2. ---------- actuator train actuates the Verify each SGSV ~~actuates~~ to the isolation position on an actual or simulated actuation signal.	24 months

INSERT 1

CONDITION	REQUIRED ACTION		COMPLETION TIME
A. One SGSV actuator train inoperable.	A.1	Restore SGSV actuator train to OPERABLE status.	7 days
B. Two SGSVs each with one actuator train inoperable such that the inoperable actuator trains are in different ESF Divisions.	B.1	Restore one SGSV actuator train to OPERABLE status.	72 hours
C. Two SGSVs each with one actuator train inoperable and both inoperable actuator trains are in the same ESF Division.	C.1	Restore one SGSV actuator train to OPERABLE status.	24 hours
D. Two SGSV actuator trains inoperable on the same SGSV.	D.1	Declare the affected SGSV inoperable.	Immediately
E. Three or more SGSV actuator trains inoperable. <u>OR</u> Required Action and associated Completion Time of Condition A, B, or C not met.	E.1	Declare each affected SGSV inoperable.	Immediately

Enclosure 5 to AEP-NRC-2017-04

Donald C. Cook Nuclear Plant Unit 1 Technical Specification Bases Pages Marked To Show Proposed Changes (For Information Only)

B 3.7.2-1
B 3.7.2-2
B 3.7.2-3
B 3.7.2-4

B 3.7 PLANT SYSTEMS

B 3.7.2 Steam Generator Stop Valves (SGSVs)

BASES

BACKGROUND

The SGSVs are used to isolate steam flow from the secondary side of the steam generators.

One SGSV is located in each main steam line outside, but close to, containment. The SGSVs are downstream from the main steam safety valves (MSSVs) and auxiliary feedwater (AFW) pump turbine steam supply, to prevent MSSV and AFW isolation from the steam generators by SGSV closure. Closing the SGSVs isolates each steam generator from the others, and isolates the turbine, Steam Bypass System, and other auxiliary steam supplies from the steam generators.

INSERT A

The SGSVs close on a steam generator isolation signal generated by the Engineered Safety Feature Actuation System (ESFAS) logic. These signals include the Containment Pressure - High High signal, High Steam Flow in Two Steam Lines Coincident with T_{avg} - Low Low, and Steam Line Pressure - Low. In addition, emergency closure can be initiated by operator actuation of the dump valves in the SGSV Control System. The SGSVs fail closed on loss of control air and fail as-is on loss of DC control power.

A description of the SGSVs is found in the UFSAR, Section 10.2 (Ref. 1).

APPLICABLE SAFETY ANALYSES

The design basis of the SGSVs is established by the accident analysis of the SLB events presented in the UFSAR, Section 14.2.5 (Ref. 2). The design precludes the blowdown of more than one steam generator, assuming a single active component failure (e.g., the failure of one SGSV to close on demand).

The limiting case is the SLB upstream of the steam flow restrictor (i.e., inside containment), with the unit initially at no load conditions, and failure of the SGSV on the affected steam generator to close. With the most reactive rod cluster control assembly assumed stuck in the fully withdrawn position, there is an increased possibility that the core will become critical and return to power. The core is ultimately shut down by the boric acid injection delivered by the Emergency Core Cooling System.

The accident analysis compares several different SLB events against different acceptance criteria. The analysis includes scenarios with offsite power available, and with a loss of offsite power following turbine trip. With offsite power available, the reactor coolant pumps continue to circulate coolant through the steam generators, maximizing the Reactor

BASES

APPLICABLE SAFETY ANALYSES (continued)

Coolant System (RCS) cooldown. With a loss of offsite power, the response of mitigating systems is delayed. Significant single failures considered include failure of an SGSV to close.

The SGSVs serve only a closed safety function and remain open during power operation. These valves operate during a SLB and steam generator tube rupture.

The SGSVs satisfy Criterion 3 of 10 CFR 50.36(c)(2)(ii).

LCO

INSERT B

This LCO requires that four SGSVs in the steam lines be OPERABLE. The SGSVs are considered OPERABLE when the isolation times are within limits, and they close on an isolation actuation signal.

and their associated actuator trains

This LCO provides assurance that the SGSVs will perform their design safety function to mitigate the consequences of accidents that could result in offsite exposures comparable to a small fraction of 10 CFR 100 (Ref. 3) limits.

APPLICABILITY

The SGSVs must be OPERABLE in MODE 1, and in MODES 2 and 3 except when closed, when there is significant mass and energy in the RCS and steam generators. When the SGSVs are closed, they are already performing the safety function.

In MODE 4, the steam generator energy is low, thus the probability of a SLB is low.

In MODE 5 or 6, the steam generators do not contain much energy because their temperature is below the boiling point of water; therefore, the SGSVs are not required for isolation of potential high energy secondary system pipe breaks in these MODES.

ACTIONS

INSERT C

F

~~A.1~~

With one SGSV inoperable in MODE 1, action must be taken to restore OPERABLE status within 8 hours. Some repairs to the SGSV can be made with the unit hot. The 8 hour Completion Time is reasonable, considering the low probability of an accident occurring during this time period that would require a closure of the SGSVs.

INSERT D

G

~~B.1~~

If the SGSV cannot be restored to OPERABLE status within 8 hours, the unit must be placed in a MODE in which the LCO does not apply. To

BASES

ACTIONS (continued)

achieve this status, the unit must be placed in MODE 2 within 6 hours and Condition ~~C~~ would be entered. The Completion Time is reasonable, based on operating experience, to reach MODE 2 in an orderly manner and without challenging unit systems.

H

~~C~~.1 and ~~C~~.2

Condition ~~C~~ is modified by a Note indicating that separate Condition entry is allowed for each SGSV.

Since the SGSVs are required to be OPERABLE in MODES 2 and 3, the inoperable SGSVs must be closed. When closed, the SGSVs are already in the position required by the assumptions in the safety analysis.

The 8 hour Completion Time is consistent with that allowed in Condition ~~A.~~ F

For inoperable SGSVs that are closed, the inoperable SGSVs must be verified on a periodic basis to be closed. This is necessary to ensure that the assumptions in the safety analysis remain valid. The 7 day Completion Time is reasonable, based on engineering judgment, in view of SGSV status indications available in the control room, and other administrative controls, to ensure that these valves are in the closed position.

I

~~D~~.1 and ~~D~~.2

If the SGSVs are not closed within the associated Completion Time, the unit must be placed in a MODE in which the LCO does not apply. To achieve this status, the unit must be placed at least in MODE 3 within 6 hours, and in MODE 4 within 12 hours. The allowed Completion Times are reasonable, based on operating experience, to reach the required unit conditions from MODE 2 conditions in an orderly manner and without challenging unit systems.

SURVEILLANCE REQUIREMENTS

SR 3.7.2.1

This SR verifies that SGSV closure time is within the limit given in Reference 4 and is within that assumed in the accident analyses. The valve(s) may also be tested to more restrictive requirements in accordance with the Inservice Testing Program. The SR is normally performed upon returning the unit to operation following a refueling outage. The SGSVs should not be tested at power, since a unit trip could occur. As the SGSVs are not tested at power, they are exempt from the ASME OM Code (Ref. 5) requirements during operation in MODE 1 or 2.

BASES

SURVEILLANCE REQUIREMENTS (continued)

The Frequency is in accordance with the Inservice Testing Program.

This test is conducted in MODE 3 with the unit at operating temperature and pressure. This SR is modified by a Note that allows entry into and operation in MODE 3 prior to performing the SR. This allows a delay of testing until MODE 3, to establish conditions consistent with those under which the acceptance criterion was generated.

SR 3.7.2.2 actuator train can close its respective

This SR verifies that each SGSV ~~can close~~ on an actual or simulated actuation signal. This Surveillance is normally performed upon returning the unit to operation following a refueling outage. The Frequency of SGSV testing is every 24 months. The 24 month Frequency for testing is based on equipment reliability. Operating experience has shown that these components usually pass the Surveillance when performed at the 24 month Frequency. Therefore, this Frequency is acceptable from a reliability standpoint.

REFERENCES

1. UFSAR, Section 10.2.
2. UFSAR, Section 14.2.5.
3. 10 CFR 100.11.
4. Technical Requirements Manual
5. ASME, Operations and Maintenance Standards and Guides (OM Codes).

INSERT A

The SGSV is a gate valve with redundant actuator trains. Either actuator train can independently perform the safety function to fast-close the SGSV on demand. Each actuator train consists of a fail-open, air-operated valve on the associated SGSV. For each SGSV, one actuator train is associated with ESF Train A, and one actuator train is associated with ESF Train B.

The actuator train does not include any portion of the analog channels or protection system actuation logic and actuation relays that provide inputs to the valve actuator trains. LCO 3.3.2, "Engineered Safety Feature Actuation System (ESFAS) Instrumentation," provides separate Conditions, Required Actions, and Surveillance Requirements for the analog channels and protection system logic and relays.

INSERT B

An SGSV actuator train is considered OPERABLE when it is capable of fast-closing the associated SGSV on demand and within the required isolation time. This includes having the ability to support fast-closure of the SGSV within the required isolation time.

INSERT C

A.1

With a single actuator train inoperable on one SGSV, action must be taken to restore the inoperable actuator train to OPERABLE status within 7 days. The 7-day Completion Time is reasonable in light of the redundant actuator train design such that with one actuator train inoperable, the affected SGSV is still capable of closing on demand via the remaining OPERABLE actuator train. The 7-day Completion Time takes into account the redundant OPERABLE actuator train to the SGSV, reasonable time for repairs, and the low probability of an event occurring that requires the inoperable actuator train to the affected SGSV.

B.1

With one actuator train on one SGSV inoperable; and one actuator train on an additional SGSV inoperable, such that the inoperable actuator trains are not in the same ESF Train, action must be taken to restore one of the inoperable actuator trains to OPERABLE status within 72 hours. With one actuator train inoperable on two different SGSVs that are not in the same ESF Train, there is an increased likelihood that an additional failure (such as the failure of an actuator logic train) could cause one SGSV to fail to close. The 72-hour Completion Time is reasonable since the redundant actuator train design ensures that with only one actuator train on each of two affected SGSVs inoperable, each SGSV is still capable of closing on demand.

C.1

With one actuator train on one SGSV inoperable; and one actuator train on an additional SGSV inoperable, such that both inoperable actuator trains are in the same ESF Train, action must be taken to restore one of the inoperable actuator trains to OPERABLE status within 24 hours. The 24-hour Completion Time provides a reasonable amount of time for restoring at least one actuator train since the redundant actuator train design for each SGSV ensures that a single inoperable actuator train cannot prevent the affected SGSV(s) from closing on demand. With two actuator trains inoperable in the same ESF Train, an additional failure (such as the failure of an actuator logic train in the other ESF Train) could cause both affected SGSVs to fail to close on demand. The 24 hour Completion Time takes into the redundant OPERABLE actuator trains

to the affected SGSVs and the low probability of an event occurring that requires the inoperable actuator trains to the affected SGSVs.

D.1

Required Action D.1 provides assurance that the appropriate Condition is entered for the affected SGSV if its associated actuator trains become inoperable. Failure of both actuator trains for a single SGSV results in the inability to close the affected SGSV on demand.

E.1

With three or more SGSV actuator trains inoperable or when Required Action A.1, B.1, or C.1 are not completed within the required Completion Time, the affected SGSVs may be incapable of closing on demand and must be immediately declared inoperable. Having three actuator trains inoperable could involve two inoperable actuator trains on one SGSV and one inoperable actuator train on another SGSV, or an inoperable actuator train on each of three SGSVs, for which the inoperable actuator trains could all be in the same ESF Train or be staggered among the two ESF Trains.

Depending on which of these conditions or combinations is in effect, the condition or combination could mean that all of the affected SGSVs remain capable of closing on demand (due to the redundant actuator train design), or that at least one SGSV is inoperable, or that with an additional single failure up to three SGSVs could be incapable of closing on demand. Therefore, in some cases, immediately declaring the affected SGSVs inoperable is conservative (when some or all of the affected SGSVs may still be capable of closing on demand even with a single additional failure), while in other cases it is appropriate (when at least one of the SGSVs would be inoperable, or up to three could be rendered inoperable by an additional single failure). Required Action E.1 is conservatively based on the worst-case condition and therefore requires immediately declaring all the affected SGSVs inoperable.

INSERT D

Condition F is entered when one SGSV is inoperable in MODE 1, including when both actuator trains for one SGSV are inoperable. When only one actuator train is inoperable on one SGSV, Condition A applies.

Enclosure 6 to AEP-NRC-2017-04

Donald C. Cook Nuclear Plant Unit 2 Technical Specification Bases Pages Marked To Show Proposed Changes (For Information Only)

B 3.7 PLANT SYSTEMS

B 3.7.2 Steam Generator Stop Valves (SGSVs)

BASES

BACKGROUND

The SGSVs are used to isolate steam flow from the secondary side of the steam generators.

One SGSV is located in each main steam line outside, but close to, containment. The SGSVs are downstream from the main steam safety valves (MSSVs) and auxiliary feedwater (AFW) pump turbine steam supply, to prevent MSSV and AFW isolation from the steam generators by SGSV closure. Closing the SGSVs isolates each steam generator from the others, and isolates the turbine, Steam Bypass System, and other auxiliary steam supplies from the steam generators.

INSERT A

The SGSVs close on a steam generator isolation signal generated by the Engineered Safety Feature Actuation System (ESFAS) logic. These signals include the Containment Pressure - High High signal, High Steam Flow in Two Steam Lines Coincident with T_{avg} - Low Low, and Steam Line Pressure - Low. In addition, emergency closure can be initiated by operator actuation of the dump valves in the SGSV Control System. The SGSVs fail closed on loss of control air and fail as-is on loss of DC control power.

A description of the SGSVs is found in the UFSAR, Section 10.2 (Ref. 1).

APPLICABLE SAFETY ANALYSES

The design basis of the SGSVs is established by the accident analysis of the SLB events presented in the UFSAR, Section 14.2.5 (Ref. 2). The design precludes the blowdown of more than one steam generator, assuming a single active component failure (e.g., the failure of one SGSV to close on demand).

The limiting case is the SLB upstream of the steam flow restrictor (i.e., inside containment), with the unit initially at no load conditions, and failure of the SGSV on the affected steam generator to close. With the most reactive rod cluster control assembly assumed stuck in the fully withdrawn position, there is an increased possibility that the core will become critical and return to power. The core is ultimately shut down by the boric acid injection delivered by the Emergency Core Cooling System.

The accident analysis compares several different SLB events against different acceptance criteria. The analysis includes scenarios with offsite power available, and with a loss of offsite power following turbine trip. With offsite power available, the reactor coolant pumps continue to circulate coolant through the steam generators, maximizing the Reactor

BASES

APPLICABLE SAFETY ANALYSES (continued)

Coolant System (RCS) cooldown. With a loss of offsite power, the response of mitigating systems is delayed. Significant single failures considered include failure of an SGSV to close.

The SGSVs serve only a closed safety function and remain open during power operation. These valves operate during a SLB, steam generator tube rupture, and feedwater line break.

The SGSVs satisfy Criterion 3 of 10 CFR 50.36(c)(2)(ii).

LCO

INSERT B

This LCO requires that four SGSVs in the steam lines be OPERABLE. The SGSVs are considered OPERABLE when the isolation times are within limits, and they close on an isolation actuation signal.

and their associated actuator trains

This LCO provides assurance that the SGSVs will perform their design safety function to mitigate the consequences of accidents that could result in offsite exposures comparable to a small fraction of 10 CFR 100 (Ref. 3) limits.

APPLICABILITY

The SGSVs must be OPERABLE in MODE 1, and in MODES 2 and 3 except when closed, when there is significant mass and energy in the RCS and steam generators. When the SGSVs are closed, they are already performing the safety function.

In MODE 4, the steam generator energy is low, thus the probability of a SLB is low.

In MODE 5 or 6, the steam generators do not contain much energy because their temperature is below the boiling point of water; therefore, the SGSVs are not required for isolation of potential high energy secondary system pipe breaks in these MODES.

ACTIONS

INSERT C

F

A.1

With one SGSV inoperable in MODE 1, action must be taken to restore OPERABLE status within 8 hours. Some repairs to the SGSV can be made with the unit hot. The 8 hour Completion Time is reasonable, considering the low probability of an accident occurring during this time period that would require a closure of the SGSVs.

INSERT D

G

B.1

If the SGSV cannot be restored to OPERABLE status within 8 hours, the unit must be placed in a MODE in which the LCO does not apply. To

BASES

ACTIONS (continued)

achieve this status, the unit must be placed in MODE 2 within 6 hours and Condition ~~C~~ would be entered. The Completion Time is reasonable, based on operating experience, to reach MODE 2 in an orderly manner and without challenging unit systems.

H

~~C~~.1 and ~~C~~.2

Condition ~~C~~ is modified by a Note indicating that separate Condition entry is allowed for each SGSV.

Since the SGSVs are required to be OPERABLE in MODES 2 and 3, the inoperable SGSVs must be closed. When closed, the SGSVs are already in the position required by the assumptions in the safety analysis.

The 8 hour Completion Time is consistent with that allowed in Condition ~~A~~. F

For inoperable SGSVs that are closed, the inoperable SGSVs must be verified on a periodic basis to be closed. This is necessary to ensure that the assumptions in the safety analysis remain valid. The 7 day Completion Time is reasonable, based on engineering judgment, in view of SGSV status indications available in the control room, and other administrative controls, to ensure that these valves are in the closed position.

I

~~D~~.1 and ~~D~~.2

If the SGSVs are not closed within the associated Completion Time, the unit must be placed in a MODE in which the LCO does not apply. To achieve this status, the unit must be placed at least in MODE 3 within 6 hours, and in MODE 4 within 12 hours. The allowed Completion Times are reasonable, based on operating experience, to reach the required unit conditions from MODE 2 conditions in an orderly manner and without challenging unit systems.

SURVEILLANCE REQUIREMENTS

SR 3.7.2.1

This SR verifies that SGSV closure time is within the limit given in Reference 4 and is within that assumed in the accident analyses. The valve(s) may also be tested to more restrictive requirements in accordance with the Inservice Testing Program. This SR is normally performed upon returning the unit to operation following a refueling outage. The SGSVs should not be tested at power, since a unit trip could occur. As the SGSVs are not tested at power, they are exempt from the ASME OM Code (Ref. 5) requirements during operation in MODE 1 or 2.

BASES

SURVEILLANCE REQUIREMENTS (continued)

The Frequency is in accordance with the Inservice Testing Program.

This test is conducted in MODE 3 with the unit at operating temperature and pressure. This SR is modified by a Note that allows entry into and operation in MODE 3 prior to performing the SR. This allows a delay of testing until MODE 3, to establish conditions consistent with those under which the acceptance criterion was generated.

SR 3.7.2.2 actuator train can close its respective

This SR verifies that each SGSV ~~can close~~ on an actual or simulated actuation signal. This Surveillance is normally performed upon returning the unit to operation following a refueling outage. The Frequency of SGSV testing is every 24 months. The 24 month Frequency for testing is based on equipment reliability. Operating experience has shown that these components usually pass the Surveillance when performed at the 24 month Frequency. Therefore, this Frequency is acceptable from a reliability standpoint.

REFERENCES

1. UFSAR, Section 10.2.
2. UFSAR, Section 14.2.5.
3. 10 CFR 100.11.
4. Technical Requirements Manual
5. ASME, Operations and Maintenance Standards and Guides (OM Codes).

INSERT A

The SGSV is a gate valve with redundant actuator trains. Either actuator train can independently perform the safety function to fast-close the SGSV on demand. Each actuator train consists of a fail-open, air-operated valve on the associated SGSV. For each SGSV, one actuator train is associated with ESF Train A, and one actuator train is associated with ESF Train B.

The actuator train does not include any portion of the analog channels or protection system actuation logic and actuation relays that provide inputs to the valve actuator trains. LCO 3.3.2, "Engineered Safety Feature Actuation System (ESFAS) Instrumentation," provides separate Conditions, Required Actions, and Surveillance Requirements for the analog channels and protection system logic and relays.

INSERT B

An SGSV actuator train is considered OPERABLE when it is capable of fast-closing the associated SGSV on demand and within the required isolation time. This includes having the ability to support fast-closure of the SGSV within the required isolation time.

INSERT C

A.1

With a single actuator train inoperable on one SGSV, action must be taken to restore the inoperable actuator train to OPERABLE status within 7 days. The 7-day Completion Time is reasonable in light of the redundant actuator train design such that with one actuator train inoperable, the affected SGSV is still capable of closing on demand via the remaining OPERABLE actuator train. The 7-day Completion Time takes into account the redundant OPERABLE actuator train to the SGSV, reasonable time for repairs, and the low probability of an event occurring that requires the inoperable actuator train to the affected SGSV.

B.1

With one actuator train on one SGSV inoperable; and one actuator train on an additional SGSV inoperable, such that the inoperable actuator trains are not in the same ESF Train, action must be taken to restore one of the inoperable actuator trains to OPERABLE status within 72 hours. With one actuator train inoperable on two different SGSVs that are not in the same ESF Train, there is an increased likelihood that an additional failure (such as the failure of an actuator logic train) could cause one SGSV to fail to close. The 72-hour Completion Time is reasonable since the redundant actuator train design ensures that with only one actuator train on each of two affected SGSVs inoperable, each SGSV is still capable of closing on demand.

C.1

With one actuator train on one SGSV inoperable; and one actuator train on an additional SGSV inoperable, such that both inoperable actuator trains are in the same ESF Train, action must be taken to restore one of the inoperable actuator trains to OPERABLE status within 24 hours. The 24-hour Completion Time provides a reasonable amount of time for restoring at least one actuator train since the redundant actuator train design for each SGSV ensures that a single inoperable actuator train cannot prevent the affected SGSV(s) from closing on demand. With two actuator trains inoperable in the same ESF Train, an additional failure (such as the failure of an actuator logic train in the other ESF Train) could cause both affected SGSVs to fail to close on demand. The 24 hour Completion Time takes into the redundant OPERABLE actuator trains

to the affected SGSVs and the low probability of an event occurring that requires the inoperable actuator trains to the affected SGSVs.

D.1

Required Action D.1 provides assurance that the appropriate Condition is entered for the affected SGSV if its associated actuator trains become inoperable. Failure of both actuator trains for a single SGSV results in the inability to close the affected SGSV on demand.

E.1

With three or more SGSV actuator trains inoperable or when Required Action A.1, B.1, or C.1 are not completed within the required Completion Time, the affected SGSVs may be incapable of closing on demand and must be immediately declared inoperable. Having three actuator trains inoperable could involve two inoperable actuator trains on one SGSV and one inoperable actuator train on another SGSV, or an inoperable actuator train on each of three SGSVs, for which the inoperable actuator trains could all be in the same ESF Train or be staggered among the two ESF Trains.

Depending on which of these conditions or combinations is in effect, the condition or combination could mean that all of the affected SGSVs remain capable of closing on demand (due to the redundant actuator train design), or that at least one SGSV is inoperable, or that with an additional single failure up to three SGSVs could be incapable of closing on demand. Therefore, in some cases, immediately declaring the affected SGSVs inoperable is conservative (when some or all of the affected SGSVs may still be capable of closing on demand even with a single additional failure), while in other cases it is appropriate (when at least one of the SGSVs would be inoperable, or up to three could be rendered inoperable by an additional single failure). Required Action E.1 is conservatively based on the worst-case condition and therefore requires immediately declaring all the affected SGSVs inoperable.

INSERT D

Condition F is entered when one SGSV is inoperable in MODE 1, including when both actuator trains for one SGSV are inoperable. When only one actuator train is inoperable on one SGSV, Condition A applies.