50-275

UNITED STATES
NUCLEAR REGULATORY COMMISSION
WASHINGTON, D.C. 20555-0001

August 24, 1995

See Rpt.

LICENSEE: Pacific Gas and Electric Company

FACILITY: Diablo Canyon Nuclear Power Plant, Unit Nos. 1 and 2

SUBJECT: SUMMARY OF AUGUST 3, 1995 MEETING WITH PACIFIC GAS AND ELECTRIC COMPANY TO DISCUSS PLANS FOR FUTURE LICENSING AND SITE ACTIVITIES FOR THE DIABLO CANYON NUCLEAR POWER PLANT, UNIT NOS. 1 AND 2

On August 3, 1995, representatives from the U.S. Nuclear Regulatory Commission (NRC) met with representatives from the Pacific Gas and Electric Company (PG&E) in the NRC offices in Rockville, Maryland to discuss plans for future licensing and site activities for the Diablo Canyon Nuclear Power Plant, Unit Nos. 1 and 2. Attachment 1 is the list of attendees.

The following is a summary of the issues discussed during the meeting. The corresponding presentation material provided by PG&E during the meeting is located in Attachment 2.

Engineering Transition Update

PG&E provided an update of the engineering improvements at the plant and organizational changes at the plant and corporate offices. PG&E indicated that significant engineering improvements have been made over the past few years, and that they would be scaling back on major modifications in the future. The licensee also indicated that the long-term engineering design work is being handled by the engineering group in the corporate offices, with the short term activities and minor modifications handled by the site engineering group.

Fire Protection/Appendix R

PG&E provided the staff with an update of the work being performed at the site in the area of fire protection. PG&E indicated that they are in the process of adding emergency lighting to Unit 1, with testing to be performed during the upcoming refueling outage. In October 1995, the licensee will submit for staff review a revised emergency lighting calculation. The licensee is in the process of performing an engineering review and walkdown of the penetration seals to ensure the functional requirements are met. The status of all penetration seals will be provided to the staff for review by December, 1995.

Standard Technical Specification Conversion

PG&E discussed the conversion of the Diablo Canyon technical specifications to the Improved Standard Technical Specifications (ISTS). PG&E indicated that they plan to implement a phased conversion approach (versus a full conversion) to the ISTS, with four major submittals, the first planned for December 1995,

Memo 4

DF01

with the final LCO/Surveillance submittal in December 1997. The changes to the design, definitions, and administrative sections along with the format of the ISTS would be submitted in January 1999. The staff informed PG&E that licensees implementing the full conversion approach would receive review priority over licensee's implementing a phased conversion approach. The staff also provided PG&E with a list of licensees that have successfully converted to the ISTS using the full conversion approach.

Diesel Fuel Oil Licensing Action Request

PG&E discussed a future licensing action request pertaining to an extension of the emergency diesel generator fuel oil storage and transfer system technical specification allowed outage time to accommodate replacement of the diesel fuel oil main storage tanks. The tanks will be replaced to comply with the California Code of Regulations. The staff informed PG&E that all background information pertaining to the design and operation of the diesel fuel oil storage and transfer system should be submitted with the request. Also, instead of changing the allowed outage time, the licensee should consider changing the location of the stored fuel oil as described in the technical specifications.

Quality Assurance Plan Revision

PG&E discussed its plans to submit a revision to the Quality Assurance Plan to (1) improve procedure use and adherence, (2) simplify the procedure change process and improve efficiency, and (3) use audit resources more effectively.

Main Steam Safety Valves Licensing Action Request

PG&E discussed a future licensing action request to increase the setpoint tolerances for the main steam safety valves (MSSVs), and for reduced power operation for inoperable MSSVs. PG&E indicated that although they have used the RETRAN code in applications throughout the plant for several years, in addition to the MSSV application, staff approval has not yet been requested. The staff informed PG&E that the topical report on RETRAN should be sent to the staff for review and approval of the site specific application.

24-Month Fuel Cycle Licensing Action Request

PG&E indicated that as part of the ISTS conversion, they will be requesting changes to the surveillance frequency intervals for equipment controlled under technical specifications to support a 24-month fuel cycle. PG&E plans for the first 24-month fuel cycle to begin in the year 2001. In the interim, PG&E plans to operate on a 20 month fuel cycle.

Future Licensing Amendment Requests

In addition to the licensing action requests discussed above, PG&E discussed briefly other licensing action requests that will be submitted in the near future.

Schedule and Major Scope Items for the 1R7 Refueling Outage

PG&E discussed the outage goals and major activities for the Unit 1 refueling outage scheduled to begin on September 30, 1995.

Original Signed By

James C. Stone, Senior Project Manager
Project Directorate IV-2
Division of Reactor Projects III/IV
Office of Nuclear Reactor Regulation

Docket Nos. 50-275
and 50-323

Attachments: 1. Meeting Attendees
2. Licensee Viewgraphs

cc w/atts: See next page

DISTRIBUTION: (w/atts 1 & 2)
Docket File
PUBLIC
PDIV-2 Reading
JStone
DChamberlain, Region IV

DISTRIBUTION: (w/att 1)
WRussell/FMiraglia
RZimmerman
JRoe
EAdensam
WBateman
EPeyton
OGC
EJordan
NRC Participants
ACRS (4)
JMitchell
KPerkins, WCFO

DOCUMENT NAME: G:\YEPKEPDF\DC8-3.MTS

OFC	PDIV-2/LA	PDIV-2/PM	PDIV-2/PM
NAME	EPeyton	KThomas:ye	JStone
DATE	8/15/95	8/18/95	8/24/95

OFFICIAL RECORD COPY

cc w/atts:
NRC Resident Inspector
Diablo Canyon Nuclear Power Plant
c/o U.S. Nuclear Regulatory Commission
P. O. Box 369
Avila Beach, California 93424

Dr. Richard Ferguson, Energy Chair
Sierra Club California
1100 11th Street, Suite 311
Sacramento, California 95814

Ms. Nancy Culver
San Luis Obispo
Mothers for Peace
P. O. Box 164
Pismo Beach, California 93448

Ms. Jacquelyn C. Wheeler
P. O. Box 164
Pismo Beach, California 93448

Managing Editor
The County Telegram Tribune
1321 Johnson Avenue
P. O. Box 112
San Luis Obispo, California 93406

Chairman
San Luis Obispo County Board of
Supervisors
Room 370
County Government Center
San Luis Obispo, California 93408

Mr. Truman Burns
Mr. Robert Kinosian
California Public Utilities Commission
505 Van Ness, Room 4102
San Francisco, California 94102

Mr. Steve Hsu
Radiologic Health Branch
State Department of Health Services
Post Office Box 942732
Sacramento, California 94232

Regional Administrator, Region IV
U.S. Nuclear Regulatory Commission
Harris Tower & Pavillion
611 Ryan Plaza Drive, Suite 400
Arlington, Texas 76011-8064

Mr. Peter H. Kaufman
Deputy Attorney General
State of California
110 West A Street, Suite 700
San Diego, California 92101

Christopher J. Warner, Esq.
Pacific Gas & Electric Company
Post Office Box 7442
San Francisco, California 94120

Mr. Warren H. Fujimoto
Vice President and Plant Manager
Diablo Canyon Nuclear Power Plant
P. O. Box 56
Avila Beach, California 93424

Diablo Canyon Independent Safety
Committee
ATTN: Robert R. Wellington, Esq.
Legal Counsel
857 Cass Street, Suite D
Monterey, California 93940

Mr. Gregory M. Rueger
Nuclear Power Generation, B14A
Pacific Gas and Electric Company
77 Beale Street, Room 1451
P. O. Box 770000
San Francisco, California 94106

Attachment 1

MEETING WITH PACIFIC GAS AND ELECTRIC COMPANY

TO DISCUSS FUTURE LICENSING AND SITE ACTIVITIES FOR

DIABLO CANYON NUCLEAR POWER PLANT, UNIT NOS. 1 AND 2

AUGUST 3, 1995

ATTENDANCE LIST

Pacific Gas and Electric Company

C. Eldridge
D. Howland
J. Tomkins
R. Waltos
M. Angus
D. Brosnan
T. Grebel

NRC

J. Stone
B. Bateman
K. Thomas
D. Shum
A. Bryant
A. Singh
M. Miller
B. Gramm
J. Peralta
G. Hammer
C. Liang

DIABLO CANYON POWER PLANT

ENGINEERING TRANSITION UPDATE (July 31, 1995)

..9508300048

Michael J. Angus
Manager - Regulatory and Design Services

PG&E

Attachment 2

NEW ORGANIZATION IMPLEMENTED

- Moves majority of daily plant support tasks to the plant
- Strategic issues and major projects in general remain in smaller General Office
- Design authority shared with plant staff
- Plant engineering sections are integrated teams that support systems and major components

PG&E

KEY PERSONNEL

- Plant design expertise improved
- Key technical expertise remains in General Office

PG&E

ENGINEERING REORGANIZATION SUMMARY

- Managers, directors, supervisors and individual contributors selected and now functioning within new organizational structure
- Critical administrative procedures have been updated to reflect new organization
- Transitioning of tasks and responsibilities to appropriate personnel

PG&E

CURRENT REORGANIZATION ISSUES

- Updating engineering procedures to take advantage of efficiencies resulting from new organization
- Communications:
  - New teams and points of contact are published in the plant electronic bulletin board
  - Monthly communications meetings
  - Accessible organization charts
- Training, re-training and qualification of staff
- Transition of work tasks to new groups, transfer of knowledge to newly assigned personnel

PG&E

Appendix R Topics

Nuclear Technical Services

Pacific Gas & Electric Company

PG&E

Appendix R Topics
Agenda

- Battery Operated Lights
- AC and DC Lights
- Pyrocrete
- Deviation Request at the Intake Structure
- Improvements
- Actions

PG&E

Battery Operated Lights (BOLs)

91-93	Safe Shutdown Analysis Revalidation
93-94	Installed BOLs for new manual actions and constricted access / egress pathways
3/94	Exemption requested for portable lights in 12 access / egress pathways
5/5/95	NRC denied deviation request
5/9/95	PG&E committed to install BOLs
7/6/95	Unit 1 design change issued
10/95	Unit 2 design change to be issued
1R7,2R7	Installed: Unit 1 by 11/95, Unit 2 by 7/96

PG&E

AC and DC Lights

- PG&E submitted a deviation request to credit emergency AC and DC lights in certain access and egress pathways, 1983-1984
- NRC accepted PG&E's position in SSER 23 & 31
- PG&E performed a major revalidation of the Appendix R Safe Shutdown Analysis, 1991-1993
- 1994 emergency lighting analysis credits additional AC and DC lights
- PG&E letter of 6/23/95 documents 8 new areas crediting AC and DC lights and transmits lighting calculation

PG&E

AC and DC Lights

NRC Question: Availability of AC or DC lights in two fire areas

Response:

1. Operator Actions in Fire Area 3-BB, Unit 1, Penetration Area

   Installed BOLs are sufficient. AC lights are not required for Fire Area 3-BB.

2. Fire Area 19-D, Unit 2, Turbine Deck

   Two DC lights (19D8, 19D9) are also available.

Action Request identifies the inconsistency among the appendices in the calculation and tracks the correction.

PG&E

Pyrocrete - Summary

- Pyrocrete testing not in conformance with recent NRC guidance (configuration and function)
- Event discovered as a follow-up action to a Thermolag nonconformance
- Hourly Fire Watches implemented
- Areas have a low combustible loading (less than 20 minutes) and available fire protection systems
- Root cause and corrective actions under determination
- 11 Fire Areas

PG&E

Pyrocrete - History

- 8/3/78 Letter transmitted results of 7/20/76 fire test at Johns-Manville Research Center
  - ASTM E-119 time-temperature curve
  - 250 degrees F above ambient
  - 2" of Pyrocrete endured for 195 minutes
- Most Pyrocrete barriers are large 5'W X 20'H
- 1/2" air gap
- Cables tested to 540 degrees F for 2 hours
- DCPP committed to a 2-hour rating

PG&E

Pyrocrete - Actions Being Considered

- Testing to GL 86-10 Supp 1
- Delete fire barriers due to offsite power being available and not damaged by fire
- Replacement with an acceptable fire barrier material
- Deviation Requests based on low combustible loading and available fire protection systems

PG&E

Intake Deviation Request

Purpose

- Request NRC's acceptance to deviate from existing commitment for a 3 hour barrier
- Request NRC's concurrence of the 2-hour rating for the installed 3M fire barrier

Scope

- Redundant safe shutdown circuits for the Auxiliary Salt Water control circuits and cooling fan power circuits

Compensatory Action

- Hourly Fire Watch

PG&E

Intake Deviation Request

Configuration

- Separation
  - 20 feet horizontal through three-hour walls
  - 37 feet total
  - Steel security enclosure around one train
- Detection
  - Two detectors, one for each Unit
  - Located approximately 20 feet from circuits
  - Electrical supervision for trouble and alarm with annunciation in the main control room

PG&E

Intake Deviation Request

Configuration (continued)

- Suppression
  - High Pressure CO_2 for each Circulating Water Pump (CWP)
  - Electrical supervision for actuation, low CO_2 pressure, and system disable are alarmed and annunciated in the main control room
- Low Combustible Loading
  - Concentrated in CWP oil - steel enclosure and 5' high concrete wall
  - Low combustibles in the balance of the area
  - No in-situ combustibles between circuits

PG&E

Intake Deviation Request

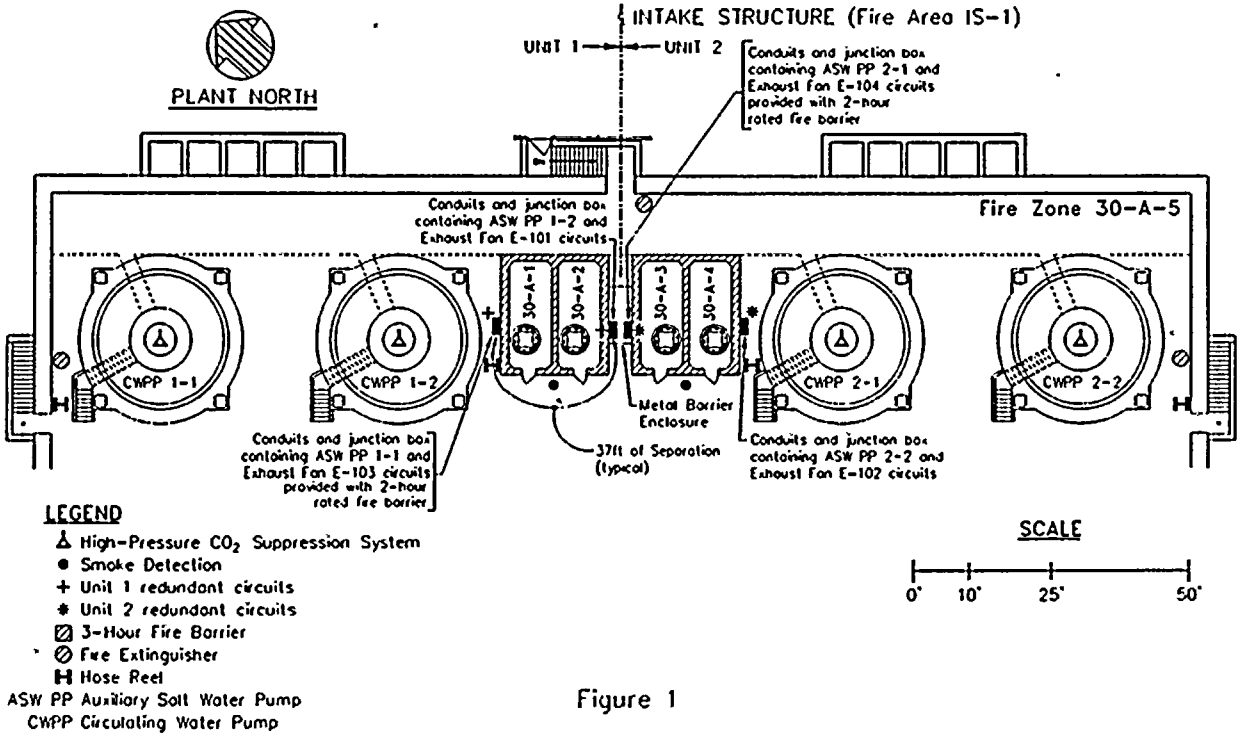

Figure 1

Intake Deviation Request

Timeliness

- Ensure technically complete and acceptable
  - Heightened awareness by PG&E management and Nuclear Safety Oversight Committee
  - Established Appendix R Team
  - Retained outside consultant to review submittal
- Industry concern with fire barriers
- Await results of new 3M fire tests

PG&E

Intake Deviation Request
3M Fire Tests

- 1986 UL test results: (GL 86-10 Supp. 1 criteria)
  - 3 hour protection for conduits
  - 2 hours, 50 minutes for junction boxes

- 1995 test results: (Used GL 86-10 Supp 1)
  - 3 hour tests: 2 1/2 hours
  - General cause of reduced rating was due to limited protection of supports

- Tests confirm 3M acceptability for use as a 2 hour barrier.

PG&E

Appendix R
Program Improvements

- Established a PG&E single point of contact
- Formed an Appendix R Team:
  - Licensing and Design Basis
  - Engineering Services
  - Quality Assurance
  - Regulatory Services
  - Safety and Fire Protection
- Identified new issues and addressed promptly
- Established an open dialogue with the NRC staff
- Supplementary review from outside consultant

PG&E

Actions

- Intake Deviation Request
- Resolve Pyrocrete
- Revise Emergency Lighting calculation
  - Address new Battery Operated Lights
  - Clarify availability of AC and DC lights
  - Delineate manual actions in the area of the fire and allowed time for access

PG&E

PENETRATION SEALS

PG&E's Position

Penetration seals which can withstand the effects of a 3-hour fire test without the passage of flame and hot gasses and successfully pass a hose stream test are acceptable for application at DCPP even though the maximum cold side temperature may have been exceeded. This is acceptable given the strict control of combustible materials, and the low combustible loading associated with the area of concern

PG&E

PENETRATION SEALS

Overview

- ~6600 seals
- Functional requirements of penetration seals
  - Fire rating
  - HVAC pressure rating
  - HELB flood rating
  - HELB steam pressure rating
  - Radiation barrier

PG&E

Penetration Seals

Requirements for Penetration Seal

- Testing shall be conducted by an independent, recognized testing laboratory
- Seal installed by qualified installers
- Flame (prevent passage of smoke, flame and hot gasses)
- Hose stream (withstand application of hose stream)

PG&E

Penetration Seals

Requirements for Penetration Seals (Cont.)

- Coldside temperature remains below;
  - 250° F above ambient on seal surface (ASTM E-119)
  - 325° F above ambient for mechanical penetrants (ASTM E-814)
  - 700° F end point temperature for cable penetrants (IEEE 634)

PG&E

PENETRATION SEALS

Requirements for Penetration Seals (Cont.)

- If the inspected seals do not conform to the criteria as outlined by the typical detail, one of three options are available;
  - repair deficient seal(s)
  - perform a Fire Hazards Appendix R Evaluation (FHARE) with an associated 50.59 Safety Evaluation
  - perform acceptance test

PG&E

PENETRATION SEALS

Parameters Affecting Seal Qualification

- Barrier orientation
- Composition/material and thickness
- Number of penetrants
- Sealant material and thickness
- Penetrant type/penetrant size
- Penetration opening size

PG&E

PENETRATION SEALS

Parameters Affecting Seal Qualification (Cont.)

Proximatey of penetrants (Spaces between penetrants and/or between penetrant and opening)

- minimum spacing
- maximum free area

- Penetrant type
- Penetrant size
- Percent cable fill and type

PG&E

PENETRATION SEALS

Difficulties in Qualifying Penetration Seals

- Limited number of qualified fire test
- Documentation of qualified fire tests
- Existing fire tests do not encompass many field conditions
- Variations from testing standards need to be clearly documented
- Vendor supplied seals (i.e. vendor qualified designs) are often based on a limited number of fire tests using extrapolated data

PG&E

PENETRATION SEALS

Key Elements of the Program

- Reassess all fire barriers for function and performance requirements
- Consider "realistic or actual" fire conditions
- Credit attributes of the DCPP Defense-in-Depth philosophy and practice

PG&E

PENETRATION SEALS

Advantages of the Diablo Canyon Approach

Provides protection commensurate with the hazards in the area with:

- Reduced initial cost
- Simplified design, construction, and maintenance activities
- Reduced adminstrative burden
- Timeliness of NCR corrective actions

PG&E

PENETRATION SEALS

Results to Date

- Test review procedure complete
- Test reviews complete
- Typical details complete
- Walkdown procedure complete
- Walkdown commenced on 7/17/95
- Engineering review of walkdown results commenced on 7/25/95

PG&E

PENETRATION SEALS

Penetration Seal Program

- Database
- Drawings
  - location
  - typicals
- Procedures
  - design
  - construction/maintenance
  - surveillance

PG&E

PENETRATION SEAL WALKDOWN PROCESS AND EVALUATION

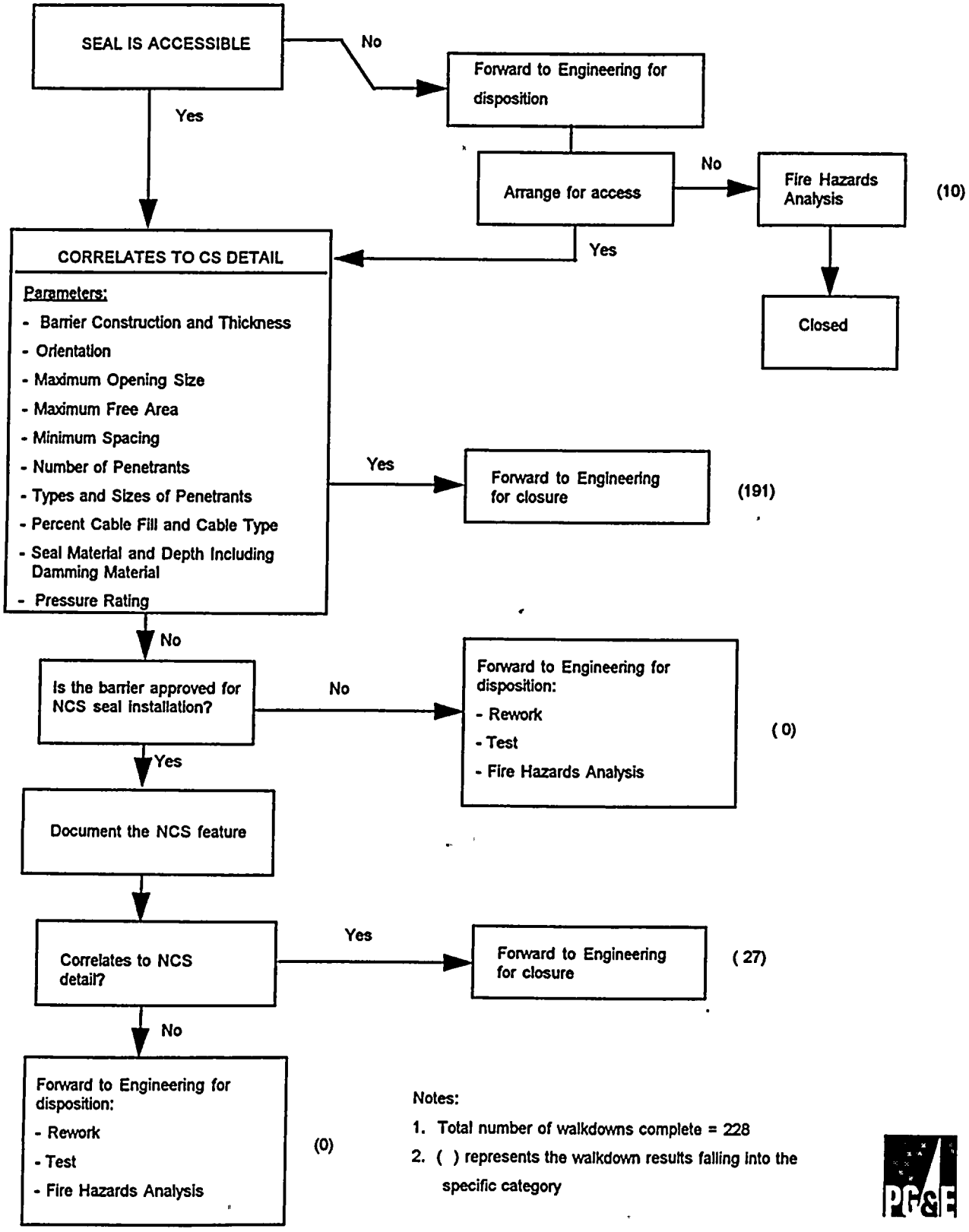

Notes:

1. Total number of walkdowns complete = 228
2. ( ) represents the walkdown results falling into the specific category

PG&E

DIABLO CANYON POWER PLANT

STANDARD TECHNICAL SPECIFICATION CONVERSION PROGRAM

PG&E

CONVERSION OPTIONS

- Full Conversion
- Phased Conversion
  - Submittal Completion by January 1998
  - Submittal Completion by January 1999

PG&E

NUREG-1431 PHASED CONVERSION PHILOSOPHY

- Request Selected NUREG-1431 Changes Based on a Spec by Spec and Section by Section Basis
- Prioritize LARs Based on the Following
  - Coordinate with Other Plant Specific Changes
  - AOT Relaxations
  - Surveillance Requirement Relaxations
- More Restrictive Changes Along with Relaxations
- Include Enhanced Bases

PG&E

FACTORS EVALUATED

- Facilitate High Quality of Submittal Review
- Levelize Resources Required for Conversion
  - Submittal Development and Review
  - 24-Month Fuel Cycles
- Coordinate with Other Technical Specification Changes
- Reduced Time for Priority License Amendments
- Reduced Need for Exigent Licensing Action

PG&E

TS CONVERSION SCHEDULE - SUBMITTAL COMPLETION JANUARY 1999

- Complete Relocation Submittal by December 1995
- Complete Limiting Condition for Operation/Surveillance Requirement Changes by December 1997
- Complete Design, Admin, Definitions Changes and Convert Format by January 1999

PG&E

DIESEL FUEL OIL LAR

- Revision of Technical Specification 3/4.8.1 -
- Request for Extension of EDG Fuel Oil Storage and
- Transfer System Allowed Outage Time

BACKGROUND

- To comply with California Code of Regulations
  - Diesel Fuel Oil Storage Tanks (DFOST) and Buried Transfer Piping to be Modified
  - DFOST Modifications Required by December 22, 1998
  - Piping Modifications Presently in Non-Compliance
- System Description
  - DFO Storage and Transfer System Supplies Units 1 and 2 EDGs
  - 2 Redundant Trains Each with
    - 40,000 gallon DFO Main Storage Tanks
    - DFO Transfer Pump
  - Combined DFO Storage Provides 7 Days of EDG Operation

PG&E

JUSTIFICATION

- Work Scope and Modifications
  - Replacement of 40,000 gal. Tanks with 50,000 gallon, Double-walled Tanks
  - Replacement of Piping between Tanks and Transfer Pumps with Double-walled Piping
  - Add Leak Detection to Double-walled Piping
  - Inspection, Re-filling, and Testing following Modifications
- PG&E Estimates Work and Modifications for both Trains to Total 120 Days with 1 Train Inoperable
  - Inoperable for Approx. 60 Days per Train (Tank and Associated Piping)
  - Total Project Duration Approximately 9 Months

PG&E

COMPENSATORY MEASURES

- Work Performed One Train at a Time
- Verification of Offsite Power Circuits Will Be Performed before Work and Every 12 hours
- Permanent and Temporary Storage 65,000 gal.
  - Permanent Storage Supply of 35,000 Gallons Provides Approximately 4 days EDG Operation
  - Temporary Storage of 30,000 gallons
- Both DFO Transfer Pumps Operable
  - 1 Pump Sufficient for 6 EDGs Operating at Rated Load
  - Either Pump Suction from Operable DFO Storage Tank

PG&E

COMPENSATORY MEASURES (CONT.)

- Independent DFO Transfer Using Portable Pump
- Additional DFO Also Available from Fuel Oil Supplier in Bay Area and Would Be Onsite Within 24 Hours
- Work Performed during Summer Months to Minimize Delays Due to Weather

PG&E

TEMPORARY STORAGE

- New 50,000 gallon Tank for First Permanent Tank Replacement
- Old 40,000 gallon Tank for Second Permanent Tank Replacement
- Located inside Plant Protected Area
- DFO Tanker Truck Transport Fuel Oil to Operable Tank if Needed for EDG Operation
- Qualifications of Temporary Tank
  - Same Seismic Requirements as Underground Tank
  - Fire Protection Requirements
  - Seismically Induced System Interaction Considered

PG&E

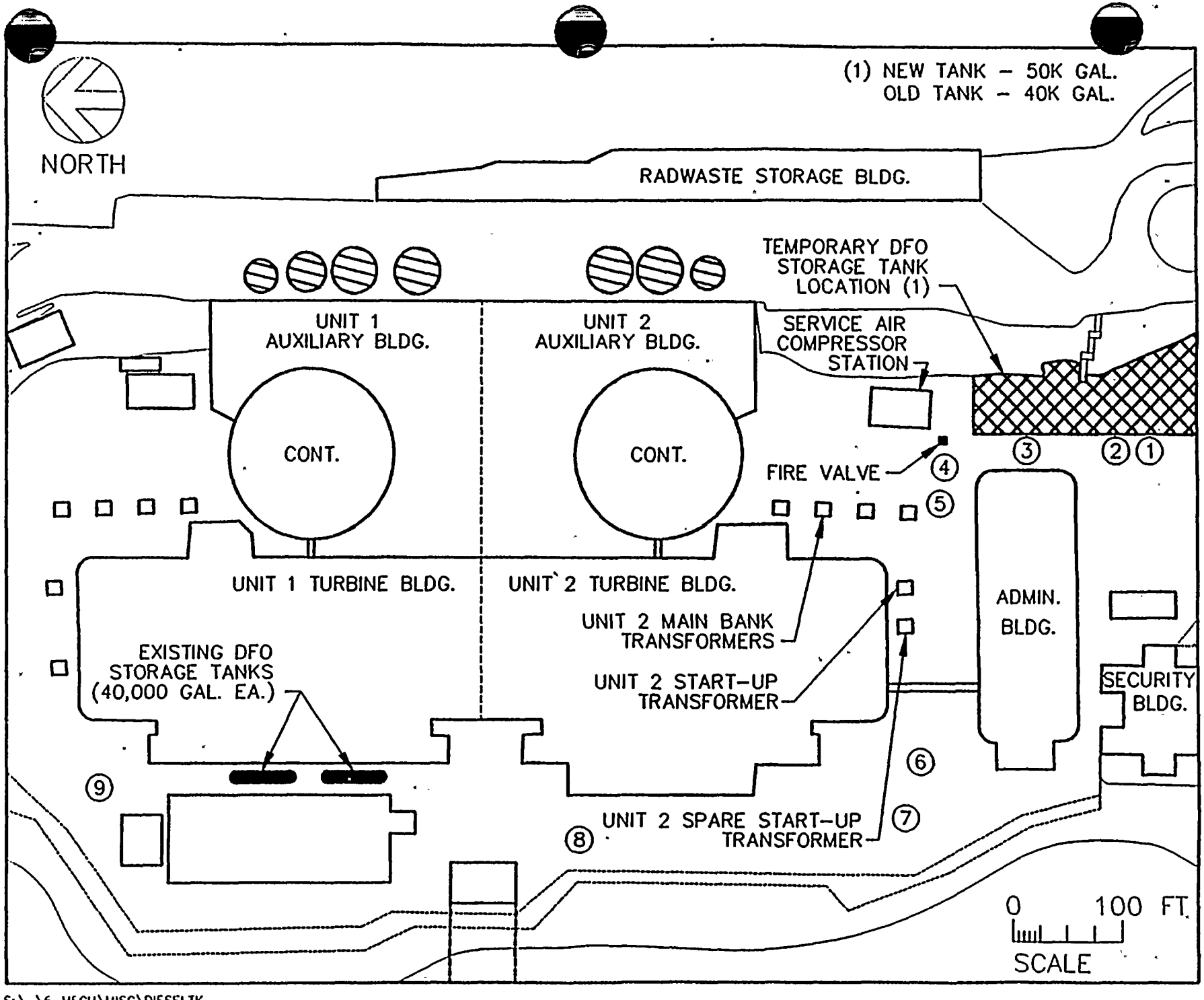

S:\..\6_MECH\MISC\DIESELTK

FUEL OIL TRANSFER

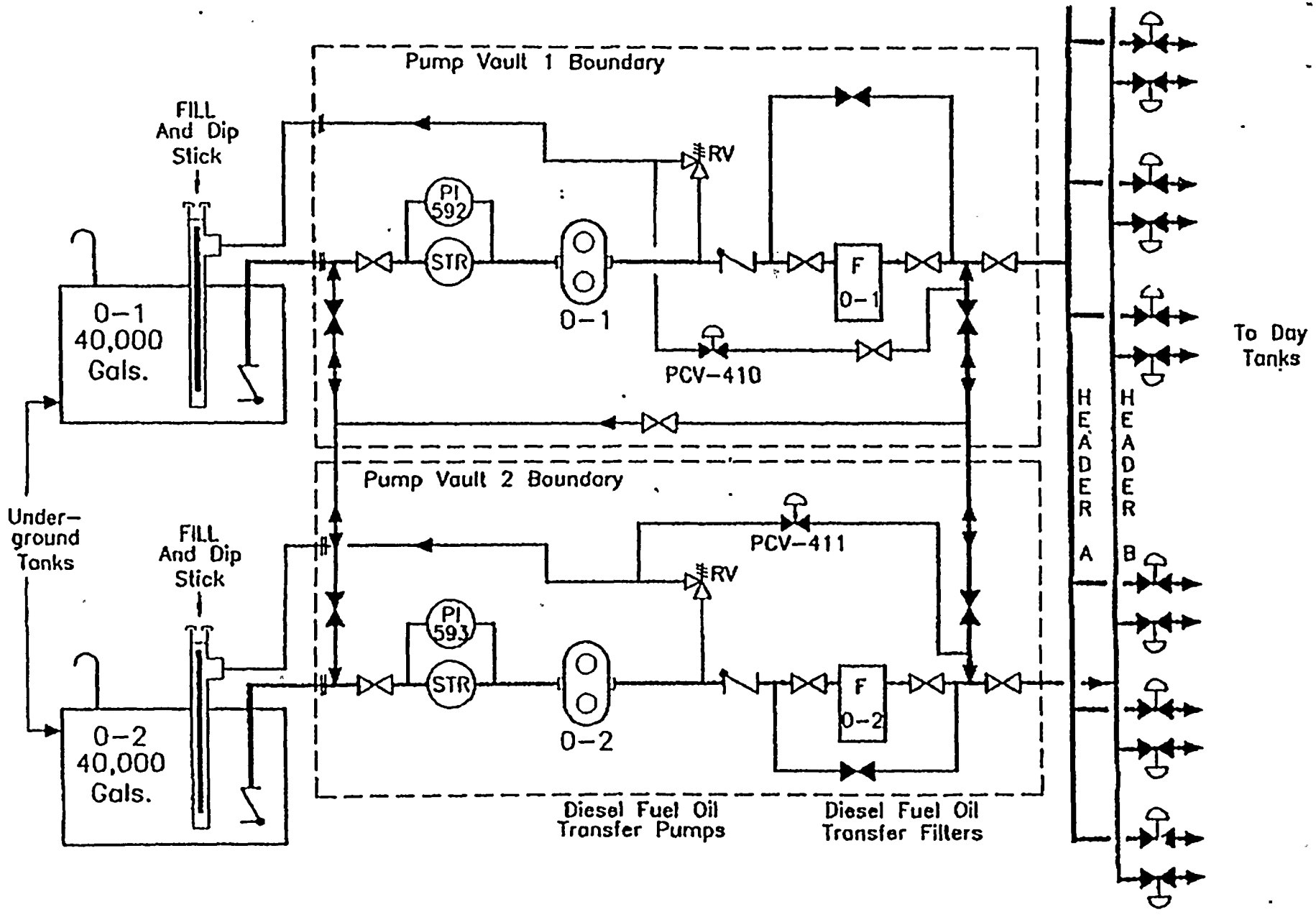

JUSTIFICATION

- Improve procedure use and adherence - CI Team recommendations
- Simplify procedure change process and improve efficiency
- Use audit resources more effectively

PG&E

CLARIFICATIONS

- Applicability - procedure review and approval requirements. Applicable to:
  1. Plant programs and procedures
  2. Other procedures if they can have an immediate effect on plant operations or the operational status of safety related structures, systems, or components

- Editorial and typographical changes are exempted from specified review requirements

PG&E

QUALIFIED REVIEWERS

- Plant manager or his designee will continue to designate procedure reviewers but not by discipline or procedure category

PG&E

PLANT STAFF REVIEW COMMITTEE

- Transferring routine procedure and program review function to qualified reviewers
- Transferring routine review function for modifications to qualified individuals
- Procedures and modifications requiring safety evaluations will still be reviewed by the PSRC
- Moving PSRC functions to FSAR Chapter 13

PG&E

PROCEDURE REVIEW AND APPROVAL

- Moving requirements to FSAR Chapter 17
- Changing approval authority to Plant Manager or his designee as identified in administrative procedures
- Reviewers are required to determine whether additional cross-disciplinary reviews are necessary. If necessary, they shall be performed by qualified reviewers

PG&E

PROCEDURE REVIEW AND APPROVAL - cont.

- Reviewers are required to determine whether safety evaluations (10 CFR 50.59) are necessary. If necessary, they shall be performed and presented to the PSRC and NSOC for review.

- Temporary changes will require approval of an SRO only if they affect plant operations or the operational status of plant equipment

PG&E

MODIFICATION REVIEW FUNCTION

- Requirements are being added to FSAR Chapter 17 to define the review function for proposed plant modifications. Requirement address:

1. Independent reviews
2. Cross-disciplinary reviews
3. Safety evaluations
4. Approval by Plant Manager or designee

PG&E

AUDIT FREQUENCIES

- Requirements are being moved to FSAR Chapter 17
- Frequencies may be adjusted based on experience so audit resources are used more effectively

PG&E

MAIN STEAM SAFETY VALVE LAR

Revision of Technical Specification 3.7.1.1, Table 3.7-1, Table 3.7-2, and Associated Bases -

Increase in Setpoint Tolerances for Main Steam Safety Valves (MSSVs), and Reduced Power Operation for Inoperable MSSVs

PG&E

BACKGROUND

- MSSV setpoint tolerance:
  - Current TS requires that MSSVs be within +/- 1 percent tolerance of their setpoint
  - ASME Section XI allows, and several other plants have obtained, a relaxation in MSSV "as-found" setpoint tolerance up to +/- 3 percent
- Westinghouse letter NSAL-94-001 provided a revised algorithm for allowable reduced plant power levels with inoperable MSSVs

PG&E

JUSTIFICATION

- Increased MSSV setpoint tolerance:
  - PG&E and industry experience indicate that MSSV setpoint drift beyond +/- 1 percent is common
  - Proposed changes would eliminate unnecessary event reporting when MSSVs found outside +/- 1 percent but within the analyzed +/- 3 percent tolerance (+3, -2 percent for lowest pressure safeties)
- Reduced power levels with inoperable MSSVs assure plant remains within analyzed conditions

PG&E

SAFETY EVALUATION

- Westinghouse analysis performed, with consideration of concurrent AFW flow reduction efforts
- RETRAN analysis performed by PG&E
- MSSVs would still be set to within the existing +/- 1 percent tolerance
- Westinghouse NSAL-94-001 algorithm used to determine reduced power levels with 2 or 3 inoperable MSSVs per loop
- Existing reduced power level for 1 inoperable MSSV per loop is conservative

PG&E

FUTURE LARs

- Relocation of Selected Section 6.0 Requirements
- Relocation of TS In Accordance With Final Policy Statement
- MSSV Setpoint Relaxation
- TS 4.0.5 Relaxations
- Appendix J ILRT Exemption
- EDG Tanks One-time AOT Relaxation
- Post Accident Monitoring Instrumentation
- Revision of TS Section 3/4.8.1
- Containment Re-analysis
- Conversion to 24-Month Fuel Cycles

PG&E

NRR MEETING
AUGUST 3, 1995

7th Unit 1 Refueling Outage

Michael J. Angus
Manager - Regulatory and Design Services

PG&E

OUTAGE GOALS

- Outage Duration 33 days (9/30/95 - 11/01/95)
- Rad exposure $\leq$ 200 man-rem
- Return to 100% power within 6 days

PG&E

MAJOR ITEMS

- Replace Vital Battery 1-1
- Upgrade Control Room Containment Isolation Valve Indications
- Replace Non-Vital Batteries 1-5 & 1-6
- Replace Main Bank Transformers
- Modify EDG ventilation to Improve Air Flow Rates
- Replace 4kV Circuit Breaker/Relays
- Install the Auxiliary Saltwater System Bypass

PG&E