ACCELERATED DISTRIBUTION DEMONSTRATION SYSTEM

REGULATORY INFORMATION DISTRIBUTION SYSTEM (RIDS)

ACCESSION NBR:9003090243 DOC.DATE: 90/02/21 NOTARIZED: NO DOCKET #
FACIL:50-275 Diablo Canyon Nuclear Power Plant, Unit 1, Pacific Ga 05000275
50-323 Diablo Canyon Nuclear Power Plant, Unit 2, Pacific Ga 05000323
AUTH.NAME AUTHOR AFFILIATION
FURTADO,V.C. Pacific Gas & Electric Co.
RECIP.NAME RECIPIENT AFFILIATION
LEONARD,W. California, State of

SEE ENVIRONMENTAL REPORTS

SUBJECT: Forwards addl info re 891115 NPDES permit application,per 900123,0214 & 20 telcons.

DISTRIBUTION CODE: C001D COPIES RECEIVED:LTR 1 ENCL 1 SIZE: 53
TITLE: Licensing Submittal: Environmental Rept Amdt & Related Correspondence

NOTES:

	RECIPIENT ID CODE/NAME	COPIES LTTR	COPIES ENCL	RECIPIENT ID CODE/NAME	COPIES LTTR	COPIES ENCL
	PD5 LA	3	3	PD5 PD	1	1
	ROOD,H	1	1			
INTERNAL:	ACRS	6	6	AEOD/DSP/TPAB	1	1
	NRR/DET/ESGB 8D	1	1	NRR/DREP/PRPB11	2	2
	NUDOCS-ABSTRACT	1	1	OC/LFMB	1	0
	OGC/HDS2	1	0	REG FILE 01	1	1
	RGN5 DRSS/RPB	1	1			
EXTERNAL:	EG&G SIMPSON,F	2	2	LPDR	1	1
	NRC PDR	1	1	NSIC	1	1

R I D S / A D D S

R I D S / A D D S

NOTE TO ALL "RIDS" RECIPIENTS:

PLEASE HELP US TO REDUCE WASTE! CONTACT THE DOCUMENT CONTROL DESK, ROOM P1-37 (EXT. 20079) TO ELIMINATE YOUR NAME FROM DISTRIBUTION LISTS FOR DOCUMENTS YOU DON'T NEED!

TOTAL NUMBER OF COPIES REQUIRED: LTTR 25 ENCL 23

Encl -1

Pacific Gas and Electric Company

One California Street, Room F-1601
San Francisco, CA
415/972-7746
Telex 972-6888
Mailing Address
P.O. Box 7640
San Francisco, CA 94120

Victor C Furtado, Ph.D.
Manager
Environmental Services

February 21, 1990

PG&E Letter No. DCL-90-050

William Leonard, Executive Officer
California Regional Water Quality Control Board
Central Coast Region
1102-A Laurel Lane
San Luis Obispo, CA 93401

Dear Mr. Leonard:

Supplemental Information for Permit Renewal Application
Diablo Canyon Power Plant - NPDES No. CA0003751

As discussed with you and your staff on January 23, February 14, and February 20, 1990, PG&E is submitting the attached supplemental information to the November 15, 1989 NPDES permit application. This submittal is made pursuant to 40 CFR 122.21(e).

Enclosure 1, which supplements Form 2-C, provides information such as more descriptive titles for waste streams and an indication of the potential presence of certain constituents even when their presence would not be detectable in the discharge. In addition to a narrative description of the revisions, revised pages of the application are provided for your convenience in the order found in Form 2-C. The revised pages are placed in the context of the entire Form 2-C and immediately follow the referenced tab number.

Enclosure 2 (Tab-19) contains revised waste discharge descriptions to reflect current operations.

Kindly acknowledge receipt of this material on the enclosed copy of this letter and return it in the enclosed addressed envelope.

Victor C Furtado

cc: NRC Region V
Document Control Desk

Enclosures

D

Cool
1/1

Victor C. Furtado

PKEckhardt(2-5442):llt

bcc: Jerome V. Boots
Jeffrey E. Gardner
Robert W. Lorenz
Earl R. Kendle
David H. Oatley
Michael L. O'Connell
Brad Thomas
David J. Williamson

Enclosure

ENCLOSURE 1

Supplemental Information

The following is a listing of supplemental information for the Diablo Canyon Power Plant NPDES permit renewal application and the justifications for each item. The tab number listed for each item corresponds to the tab on the right-hand side of the document.

Form 2C:

Part II(B)(3)(a) and (b)

Discharge 001 - Tab-1: Three wastewater treatment technologies, screening, chlorination, and landfill, have been deleted. These treatment technologies were deleted because they are influent treatments rather than wastewater treatments. Screening occurs at the intake to remove any large particles prior to entering the condensers. Chlorination controls microbial growth in the condensers. Landfill is used for disposal of screened material and is included under Discharge 003.

Discharge 001B - Tab-1: Two wastewater treatment technologies, screening and chlorination, have been deleted. These treatment technologies were deleted because they are influent treatments rather than wastewater treatments. Screening occurs at the intake to remove any large particles prior to entering the heat exchangers. Chlorination controls microbial growth in the heat exchangers.

Part II(B)(2)(a)

Discharge 001N - Tab-2: Domestic Sanitary Waste now reads the Sewage Package Treatment System. This title best describes the operation contributing to the discharge.

Discharge 004A - Tab-3: Thermal Effects Lab operation now reads the Biolab. This title best describes the operation contributing to the discharge.

Discharge 004B - Tab-3: Landfill was added for disposal of oil if present in passive oil/water separator.

Part II(B)(3)(a)

Discharges 005, 006, 007 - Tab-3: Discharge to Ocean Through Outfall now reads Ocean Discharge Through Outfall. This treatment description was changed to conform with EPA instructions.

Revision List (Cont.)

Part II(B)(2)(a)

Discharge 015 - Storm Water Runoff now reads Yard Storm Drains. This
Tab-4 title best describes this discharge.

Discharge 016 - Biolab Valve Box Drain now reads Biolab Seawater Supply
Tab-4 Pump Valve Drain. This title best describes the source of this discharge.

Discharge 017 - R.O. Brine Line Lowpoint Drain now reads Seawater Reverse
Tab-4 Osmosis Blowdown Drain. This title best describes the source of this discharge.

Part II(B)(3)(a&b)

Discharge 015 - Flotation and landfill have been added to treatment
Tab-4 descriptions based on the use of an oil/water separator.

Attachment C - Waste Stream Schematic. The operation titles have been
Tab-5 revised as stated above.

Part V(D)(2) - The words "Analytical data from Discharge 001 D are
Tab-6 provided in the table on the following page" were added. Radiochemical analytical data has been provided for strontium and zirconium (Tab 7). The data were extracted from the 1988 (third and fourth calendar quarters) and 1989 (first and second calendar quarters) Semiannual Radioactive Effluent Release Report. This report is required by the NRC.

Tab-7 The table titled "Strontium and Zirconium Discharged" was added to provide analytical and calculated data.

Attachment 1 - 001D - The design flow rates have been changed to reflect
Tab-8 the flow rates of a larger pump which is now in operation.

Tab-8 006, 007, 010, 011, and 012 - These stormwater discharges are now removed from this attachment. Originally, the intermittent waste stream list included stormwater runoff discharges. As these discharges are not required to be listed in this part of the application, they have been removed.

Tab-8 009, 014, 015 - The discharge frequency of these discharges is now listed as "variable" based on the collection of both yard and stormwater drainage. Discharge Operation names were changed for discharges 015,016 and 017.

Tab-9 - A list of chemicals currently used in the chemical laboratories is included for information purposes.

Revision List (Cont.)

Part V(B)(1)(h)

Discharge 001 - Oil and Grease is now marked "believed present" since
Tab-10 lubricating oils are used and could be discharged.

Part V(B)(1)(j)(3&4)

Discharge 001 - Radium is now marked "believed present" based on its
Tab-10 natural occurrence in seawater.

Part V(B)(1)(n)

Discharge 001 - Surfactants is now marked "believed present" since
Tab 10 in-plant discharge 001D may contain laundry wastes including detergents.

Part V(C)(1)(5M)

Discharge 001 - Chromium is now marked "believed present" based on the
Tab-11 use of corrosion inhibitors in the closed cooling water systems and the potential for discharge due to leakage or during testing and maintenance activities.

Part V(C)(1)(4M)

Discharge 001 - Cadmium is now marked "believed present" based on its
Tab-11 detection in prior analyses for annual reports.

Part V(C)(1)(15M)

Discharge 001 - Phenols is now marked "believed present" based on the
Tab-11 use of non-chlorinated phenolic chemicals in the primary and secondary laboratories, and their potential presence in the laboratory drain wastes.

Part V(C)(1)(25V)

Discharge 001 - Toluene is now marked "believed present" based on its use
Tab-12 in the primary and secondary laboratories and its potential presence in the laboratory drain wastes.

Part V(C)(1)(22B)-(42B)

Discharge 001 - All Base/Neutral Compounds are now marked "believed
Tab-13 absent" for pollutants 22B through 28B and 30B through 42B. Neither column was checked originally.

Part V(C)(1)(29B) - Di-N-Octylphalate (DOP) is now marked "believed
Tab 13 present." DOP is used during ventilation system testing and might be found in the discharge. Neither column was marked originally.

Revision List (Cont.)

Part V(B)(1)(h)

Discharge 002 - Oil and grease is now marked "believed present" based on
Tab-14 its detection in prior analyses for quarterly reports and the use of lubricating oil.

Part V(B)(1)(j)(3&4)

Discharge 002 - Radium is now marked "believed present" based on its
Tab-14 natural occurrence in seawater.

Part V(B)(1)(n)

Discharge 002 - Surfactants is now marked "believed present" based on the
Tab-14 potential release of detergents during maintenance operations.

Part V(A)(1)(f)

Discharge 003 - Flow Value was corrected to read 5.76×10^6 GPD.
Tab-15

Part V(B)(1)(b)

Discharge 003 - Bromide is now marked "believed present" based on its
Tab-15 natural occurrence in seawater.

Part V(B)(1)(b)

Discharge 003 - Chlorine, Total Residual is now marked "believed present"
Tab-15 based on the use of chlorine as a method of biofouling control in the circulating water system.

Part V(B)(1)(j)(3&4)

Discharge 003 - Radium is now marked "believed present" based on its
Tab-16 natural occurrence in seawater.

Part V(B)(1)(h)

Discharge 003 - Oil and grease is now marked "believed present" based on
Tab-16 the potential release of lubricating oil from the screen wash pumps.

Part V(B)(1)(a)

Discharge 004 - Bromide is now marked "believed present" based on its
Tab-17 natural occurrence in seawater.

Revision List (Cont.)

Part V(B)(1)(b)

Discharge 004 - Chlorine, Total Residual is now marked "believed present"
Tab-17 based on the use of chlorine as a method of biofouling control in the seawater system.

Part V(B)(1)(g)

Discharge 004 - Nitrogen is now marked "believed present" based on the
Tab-18 listed analytical results.

Part V(B)(1)(h)

Discharge 004 - Oil and grease is now marked "believed present" based on
Tab-18 containment of roadway drainage.

Part V(B)(1)(i)

Discharge 004 - Phosphorus is now marked "believed present" based on the
Tab-18 listed analytical results.

Part V(B)(1)(j)(3)

Discharge 004 - Radium is now marked "believed present" based on its
Tab-18 natural occurrence in seawater.

Part V(B)(1)(n)

Discharge 004 - Surfactants is now marked "believed present" based on the
Tab-18 potential release of detergents during maintenance activities.

Please print or type in the unshaded areas only.

EPA I.D. NUMBER (copy from Item 1 of Form 1): CAD 077966349

Form Approved.
OMB No. 2040-0086
Approval expires 7-31-88

FORM 2C NPDES

EPA

U.S. ENVIRONMENTAL PROTECTION AGENCY
APPLICATION FOR PERMIT TO DISCHARGE WASTEWATER
EXISTING MANUFACTURING, COMMERCIAL, MINING AND SILVICULTURAL OPERATIONS
Consolidated Permits Program

I. OUTFALL LOCATION

For each outfall, list the latitude and longitude of its location to the nearest 15 seconds and the name of the receiving water.

OUTFALL NUMBER (list)	B. LATITUDE 1. DEG.	2. MIN.	3. SEC.	C. LONGITUDE 1. DEG.	2. MIN.	3. SEC.	D. RECEIVING WATER (name)
001	35	12	45	120	51	15	Pacific Ocean (Diablo Cove)

II. FLOWS, SOURCES OF POLLUTION, AND TREATMENT TECHNOLOGIES

A. Attach a line drawing showing the water flow through the facility. Indicate sources of intake water, operations contributing wastewater to the effluent, and treatment units labeled to correspond to the more detailed descriptions in Item B. Construct a water balance on the line drawing by showing average flows between intakes, operations, treatment units, and outfalls. If a water balance cannot be determined *(e.g., for certain mining activities)*, provide a pictorial description of the nature and amount of any sources of water and any collection or treatment measures.

B. For each outfall, provide a description of: (1) All operations contributing wastewater to the effluent, including process wastewater, sanitary wastewater, cooling water, and storm water runoff; (2) The average flow contributed by each operation; and (3) The treatment received by the wastewater. Continue on additional sheets if necessary.

1. OUTFALL NO. (list)	2. OPERATION(S) CONTRIBUTING FLOW a. OPERATION (list)	b. AVERAGE FLOW (include units)	3. TREATMENT a. DESCRIPTION	b. LIST CODES FROM TABLE 2C-1	
001	Once Through Cooling	2.54×10^9 GPD	Ocean Discharge Through	4-B	
			Outfall		
	001B Auxiliary Salt	6.34×10^7 GPD			
	Water Cooling				
	001D Liquid Radioactive	5.0×10^4 GPD	Microstraining	1-N	
	Waste Treatment		Carbon Absorption	2-A	
	System Effluent		Ion Exchange	2-J	
			Coagulation	2-D	
			Landfill	5-Q	
	001E Service Cooling	2.5×10^7 GPD	Screening	1-T	
	Water				
	001F Turbine Building Sump	1.5×10^5 GPD	Flotation (Oil/Water	1-H	
			Separation		
			Coagulation	2-D	
			Landfill	5-Q	

OFFICIAL USE ONLY (effluent guidelines sub-categories)

FORM 2C NPDES

EPA

U.S. ENVIRONMENTAL PROTECTION AGENCY

APPLICATION FOR PERMIT TO DISCHARGE WASTEWATER
EXISTING MANUFACTURING, COMMERCIAL, MINING AND SILVICULTURAL OPERATIONS
Consolidated Permits Program

I. OUTFALL LOCATION

For each outfall, list the latitude and longitude of its location to the nearest 15 seconds and the name of the receiving water.

A. OUTFALL NUMBER (list)	B. LATITUDE			C. LONGITUDE			D. RECEIVING WATER (name)
	1. DEG.	2. MIN.	3. SEC.	1. DEG.	2. MIN.	3. SEC.	

II. FLOWS, SOURCES OF POLLUTION, AND TREATMENT TECHNOLOGIES

A. Attach a line drawing showing the water flow through the facility. Indicate sources of intake water, operations contributing wastewater to the effluent, and treatment units labeled to correspond to the more detailed descriptions in Item B. Construct a water balance on the line drawing by showing average flows between intakes, operations, treatment units, and outfalls. If a water balance cannot be determined (*e.g., for certain mining activities*), provide a pictorial description of the nature and amount of any sources of water and any collection or treatment measures.

B. *For each outfall, provide a description of:* (1) *All operations contributing wastewater to the effluent, including process wastewater, sanitary wastewater, cooling water, and storm water runoff;* (2) The average flow contributed by each operation; and (3) The treatment received by the wastewater. Continue on additional sheets if necessary.

1. OUTFALL NO. (list)	2. OPERATION(S) CONTRIBUTING FLOW		3. TREATMENT		
	a. OPERATION (list)	b. AVERAGE FLOW (include units)	a. DESCRIPTION	b. LIST CODES FROM TABLE 2C-1	
	001G Make-up Water System	4.83×10^5 GPD			
	Waste Effluent				
	001H Condensate	1.5×10^5 GPD	Filtration (Microstraining)	1-N	
	Demineralizer		Neutralization	2-K	
	Regenerant		Landfill	5-Q	
	001I Seawater	5.0×10^5 GPD			
	Evaporator				
	Blowdown				
	001J Condensate Pumps	3.6×10^5 GPD			
	Discharge Header				
	Overboard				
	001K Condensate	1.4×10^5 GPD			
	Tube Sheet Leak				
	Detection Dump Tank				
	Overboard				
	001L Steam Generator	6.5×10^5 GPD			
	Blowdown				

OFFICIAL USE ONLY (*effluent guidelines sub-categories*)

CONTINUE ON REVERSE

Please print or type in the unshaded areas only.

EPA I.D. NUMBER (copy from Item 1 of Form 1): CAD 077966349

OMB No. 2040-0086
Approval expires 7-31-88

FORM 2C NPDES

EPA

U.S. ENVIRONMENTAL PROTECTION AGENCY
APPLICATION FOR PERMIT TO DISCHARGE WASTEWATER
EXISTING MANUFACTURING, COMMERCIAL, MINING AND SILVICULTURAL OPERATIONS
Consolidated Permits Program

I. OUTFALL LOCATION

For each outfall, list the latitude and longitude of its location to the nearest 15 seconds and the name of the receiving water.

A. OUTFALL NUMBER (list)	B. LATITUDE			C. LONGITUDE			D. RECEIVING WATER (name)
	1. DEG.	2. MIN.	3. SEC.	1. DEG.	2. MIN.	3. SEC.	

II. FLOWS, SOURCES OF POLLUTION, AND TREATMENT TECHNOLOGIES

A. Attach a line drawing showing the water flow through the facility. Indicate sources of intake water, operations contributing wastewater to the effluent, and treatment units labeled to correspond to the more detailed descriptions in Item B. Construct a water balance on the line drawing by showing average flows between intakes, operations, treatment units, and outfalls. If a water balance cannot be determined *(e.g., for certain mining activities)*, provide a pictorial description of the nature and amount of any sources of water and any collection or treatment measures.

B. For each outfall, provide a description of: (1) All operations contributing wastewater to the effluent, including process wastewater, sanitary wastewater, cooling water, and storm water runoff; (2) The average flow contributed by each operation; and (3) The treatment received by the wastewater. Continue on additional sheets if necessary.

1. OUTFALL NO. (list)	2. OPERATION(S) CONTRIBUTING FLOW		3. TREATMENT		
	a. OPERATION (list)	b. AVERAGE FLOW (include units)	a. DESCRIPTION	b. LIST CODES FROM TABLE 2C-1	
	001M Wastewater Holding	8.0×10^5 GPD	Flotation (Oil/Water Separation)	1-H	
	and Treatment System		Multimedia Filtration	1-Q	
			Sedimentation (settling)	1-U	
			Neutralization	2-K	
			Coagulation	2-D	
			Landfill	5-Q	
			Chlorination	2-F	
	001N Sewage Package	3.5×10^3 GPD	Activated Sludge	3-A	
	Treatment System		Aerobic Digestion	5-A	
			Land Application	5-P	
			Leach Fields	xx	
	001P Seawater Reverse	1.44×10^6 GPD			
	Osmosis System				
	Blowdown				

OFFICIAL USE ONLY (effluent guidelines sub-categories)

CONTINUE ON REVERSE

Please print or type in the unshaded areas only.

EPA I.D. NUMBER (copy from Item 1 of Form 1): CAD 077966349

Form Approved. OMB No. 2040-0086 Approval expires 7-31-88

FORM 2C NPDES — U.S. ENVIRONMENTAL PROTECTION AGENCY — APPLICATION FOR PERMIT TO DISCHARGE WASTEWATER — EXISTING MANUFACTURING, COMMERCIAL, MINING AND SILVICULTURAL OPERATIONS — Consolidated Permits Program

I. OUTFALL LOCATION

For each outfall, list the latitude and longitude of its location to the nearest 15 seconds and the name of the receiving water.

A. OUTFALL NUMBER (list)	B. LATITUDE 1. DEG.	2. MIN.	3. SEC.	C. LONGITUDE 1. DEG.	2. MIN.	3. SEC.	D. RECEIVING WATER (name)
002	35	12	30	120	51	15	Pacific Ocean (Intake Cove)
003	35	12	30	120	51	15	Pacific Ocean
004	35	12	30	120	51	15	Pacific Ocean (Intake Cove)
005	35	12	15	120	51	15	Pacific Ocean (South Cove)
006	35	12	15	120	51	0	Pacific Ocean (South Cove)
007	35	12	15	120	50	45	Pacific Ocean

II. FLOWS, SOURCES OF POLLUTION, AND TREATMENT TECHNOLOGIES

A. Attach a line drawing showing the water flow through the facility. Indicate sources of intake water, operations contributing wastewater to the effluent, and treatment units labeled to correspond to the more detailed descriptions in Item B. Construct a water balance on the line drawing by showing average flows between intakes, operations, treatment units, and outfalls. If a water balance cannot be determined *(e.g., for certain mining activities)*, provide a pictorial description of the nature and amount of any sources of water and any collection or treatment measures.

B. For each outfall, provide a description of: (1) All operations contributing wastewater to the effluent, including process wastewater, sanitary wastewater, cooling water, and storm water runoff; (2) The average flow contributed by each operation; and (3) The treatment received by the wastewater. Continue on additional sheets if necessary.

1. OUTFALL NO. (list)	2. OPERATION(S) CONTRIBUTING FLOW a. OPERATION (list)	b. AVERAGE FLOW (include units)	3. TREATMENT a. DESCRIPTION	b. LIST CODES FROM TABLE 2C-1	
002	Intake Structure	3.5×10^5 GPD	Ocean Discharge Through	4-B	
	Floor Drains		Outfall		
003	Intake Screen Wash	5.76×10^6 GPD	Screening	1-T	
			Ocean Discharge Through	4-B	
			Outfall		
			Landfill	5-Q	
004	004A Biolab	1.73×10^6 GPD	Flotation(Oil/Water Separation)	1-H	
	004B Yard Storm Drain	3.8×10^4 GPD*	Ocean Discharge Through Outfall	4-B	
			Landfill	5-Q	
005	Yard Storm Drain	1.35×10^5 GPD*	Ocean Discharge Through	4-B	
			Outfall		
006	Storm Water Runoff	1.2×10^5 GPD*	Ocean Discharge Through	4-B	
			Outfall		
007	Storm Water Runoff	3.9×10^4 GPD*	Ocean Discharge Through Outfall	4-B	

*(6-month winter average, November through April; average daily flow)

OFFICIAL USE ONLY *(effluent guidelines sub-categories)*

Please print or type in the unshaded areas only.

EPA I.D. NUMBER (copy from Item 1 of Form 1): CAD 077966349

Form Approved. OMB No. 2040-0086 Approval expires 7-31-88

FORM 2C NPDES

U.S. ENVIRONMENTAL PROTECTION AGENCY
APPLICATION FOR PERMIT TO DISCHARGE WASTEWATER
EXISTING MANUFACTURING, COMMERCIAL, MINING AND SILVICULTURAL OPERATIONS

Consolidated Permits Program

I. OUTFALL LOCATION

For each outfall, list the latitude and longitude of its location to the nearest 15 seconds and the name of the receiving water.

OUTFALL NUMBER (list)	B. LATITUDE 1. DEG.	2. MIN.	3. SEC.	C. LONGITUDE 1. DEG.	2. MIN.	3. SEC.	D. RECEIVING WATER (name)
008	35	12	45	120	51	15	Diablo Creek
009	35	12	45	120	51	15	Diablo Creek
010	35	12	45	120	51	15	Diablo Creek
011	35	13	0	120	51	15	Diablo Creek
012	35	13	0	120	51	15	Diablo Creek
013	35	13	0	120	51	15	Diablo Creek

II. FLOWS, SOURCES OF POLLUTION, AND TREATMENT TECHNOLOGIES

A. Attach a line drawing showing the water flow through the facility. Indicate sources of intake water, operations contributing wastewater to the effluent, and treatment units labeled to correspond to the more detailed descriptions in Item B. Construct a water balance on the line drawing by showing average flows between intakes, operations, treatment units, and outfalls. If a water balance cannot be determined *(e.g., for certain mining activities)*, provide a pictorial description of the nature and amount of any sources of water and any collection or treatment measures.

B. For each outfall, provide a description of: (1) All operations contributing wastewater to the effluent, including process wastewater, sanitary wastewater, cooling water, and storm water runoff; (2) The average flow contributed by each operation; and (3) The treatment received by the wastewater. Continue on additional sheets if necessary.

1. OUTFALL NO. (list)	2. OPERATION(S) CONTRIBUTING FLOW a. OPERATION (list)	b. AVERAGE FLOW (include units)	3. TREATMENT a. DESCRIPTION	b. LIST CODES FROM TABLE 2C-1	
008	Yard Storm Drains:	1.4×10^5 GPD*	Discharge to Surface Water	4-A	
	Storm Water Runoff				
009	Yard Storm Drains	2.4×10^4 GPD*	Discharge to Surface Water	4-A	
			Flotation (Oil/Water Separation)	1-H	
			Landfill	5-Q	
010	Storm Water Runoff	1.2×10^4 GPD*	Discharge to Surface Water	4-A	
011	Storm Water Runoff	3.4×10^5 GPD*	Discharge to Surface Water	4-A	
012	Storm Water Runoff	7.6×10^3 GPD*	Discharge to Surface Water	4-A	
013	Yard Storm Drains	1.1×10^5 GPD*	Discharge to Surface Water	4-A	

* (6 month winter average, November through April; average daily flow)

OFFICIAL USE ONLY *(effluent guidelines sub-categories)*

Attachment C

WASTE STREAM SCHEMATIC

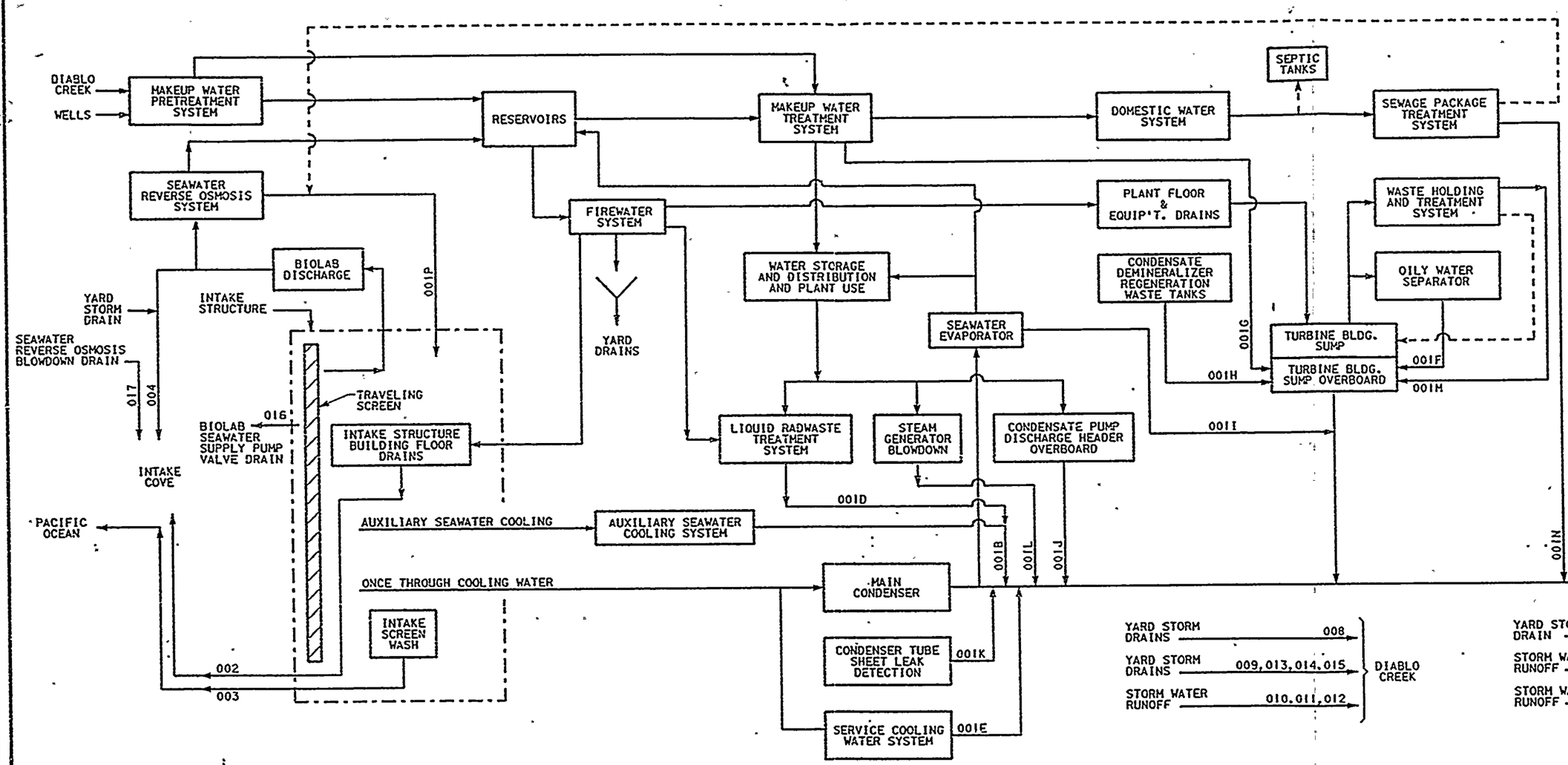

SI APERTURE CARD

Also Available On Aperture Card

DISCHARGE	DESCRIPTION	VOLUME (gal/day)
001	Once through Cooling Water	2,540,000,000
001B	Auxiliary Salt Water Cooling	63,400,000
001D	Liquid Radioactive Waste Treatment System Effluent (Intermittent)	50,000
001E	Service Cooling Water	25,000,000
001F	Turbine Bldg. Sump (Intermittent)	150,000

DISCHARGE	DESCRIPTION	VOLUME (gal/day)
001G	Makeup Water System Waste Effluent	483,000
001H	Condensate Demineralizer Regenerant (Intermittent)	150,000
001I	Seawater Evaporator Blowdown	500,000
001J	Condensate Pump Discharge Header Overboard (Intermittent)	360,000

DISCHARGE	DESCRIPTION	VOLUME (gal/day)
001K	Condensate Tube Sheet Leak Detection Dump Tank Overboard (Intermittent)	140,000
001L	Steam Generator Blowdown	650,000
001M	Wastewater Holding & Treatment System	800,000
001N	Sewage Package Treatment System	3,500
001P	Seawater Reverse Osmosis System Blowdown	1,440,000

DISCHARGE	DESCRIPTION	VOLUME (gal/day)
002	Intake Structure Bldg. Floor Drains (Intermittent)	350,000
003	Intake Screen Wash (Intermittent)	5,760,000
004	Biolab Discharge	1,730,000
	Yard Storm Drains	Variable
005	Yard Storm Drain	Variable
006	Storm Water Runoff	Variable
007	Storm Water Runoff	Variable

DISCHARGE	DESCRIPTION	VOLUME (gal/day)
008	Yard Storm Drains, Storm Water Runoff	Variable
009	Yard Storm Drains	Variable
010	Storm Water Runoff	Variable
011	Storm Water Runoff	Variable
012	Storm Water Runoff	Variable
013	Yard Storm Drains	Variable
014	Yard Storm Drains	Variable
015	Yard Storm Drains	Variable
016	Biolab Seawater Supply Pump Valve Drain	Variable
017	Seawater Reverse Osmosis Blowdown Drain	Variable

(229,146)WASTE.DGN 02-12-90 9:22 VMP

9003090243-01

Please print or type in the unshaded areas only.

EPA I.D. NUMBER (copy from Item 1 of Form 1): CAD 077966349

OMB No. 2040-0086
Approval expires 7-31-88

FORM 2C NPDES

U.S. ENVIRONMENTAL PROTECTION AGENCY
APPLICATION FOR PERMIT TO DISCHARGE WASTEWATER
EXISTING MANUFACTURING, COMMERCIAL, MINING AND SILVICULTURAL OPERATIONS
Consolidated Permits Program

I. OUTFALL LOCATION

For each outfall, list the latitude and longitude of its location to the nearest 15 seconds and the name of the receiving water.

OUTFALL NUMBER (list)	B. LATITUDE 1. DEG.	2. MIN.	3. SEC.	C. LONGITUDE 1. DEG.	2. MIN.	3. SEC.	D. RECEIVING WATER (name)
014	35	13	0	120	50	45	Diablo Creek
015	35	13	0	120	50	45	Diablo Creek
016	35	12	30	120	51	15	Pacific Ocean(Intake Cove)
017	35	12	30	120	51	15	Pacific Ocean (Intake Cove)

II. FLOWS, SOURCES OF POLLUTION, AND TREATMENT TECHNOLOGIES

A. Attach a line drawing showing the water flow through the facility. Indicate sources of intake water, operations contributing wastewater to the effluent, and treatment units labeled to correspond to the more detailed descriptions in Item B. Construct a water balance on the line drawing by showing average flows between intakes, operations, treatment units, and outfalls. If a water balance cannot be determined *(e.g., for certain mining activities)*, provide a pictorial description of the nature and amount of any sources of water and any collection or treatment measures.

B. For each outfall, provide a description of: (1) All operations contributing wastewater to the effluent, including process wastewater, sanitary wastewater, cooling water, and storm water runoff; (2) The average flow contributed by each operation; and (3) The treatment received by the wastewater. Continue on additional sheets if necessary.

1. OUTFALL NO. (list)	2. OPERATION(S) CONTRIBUTING FLOW a. OPERATION (list)	b. AVERAGE FLOW (include units)	3. TREATMENT a. DESCRIPTION	b. LIST CODES FROM TABLE 2C-1	
014	Yard Storm Drains	3.1×10^3 GPM*	Discharge to Surface Water	4-A	
015	Yard Storm Drains	900 GPM*	Discharge to Surface Water	4-A	
			Flotation (Oil/Water		
			Separation)	1-H	
			Landfill	5-Q	
016	Biolab Seawater Supply	5.0×10^3 GPD	Ocean Discharge Through	4-B	
	Pump Valve Drain		Outfall		
017	Seawater Reverse Osmosis	2.5×10^3 GPD	Ocean Discharge Through	4-B	
	System Blowdown Drain		Outfall		
	*Based on a maximum storm water volume (GPM - 10 - year event)				

OFFICIAL USE ONLY (effluent guidelines sub-categories)

CONTINUE ON REVERSE

C. Except for storm runoff, leaks, or spills, are any of the discharges described in Items II-A or B intermittent or seasonal?

☒ YES (complete the following table) ☐ NO (go to Section III)

1. [illegible] (list)	2. OPERATION(s) CONTRIBUTING FLOW (list)	3. FREQUENCY a. DAYS PER WEEK (specify average)	3. FREQUENCY b. MONTHS PER YEAR (specify average)	4. FLOW a. FLOW RATE (in mgd) 1. LONG TERM AVERAGE	4. FLOW a. FLOW RATE (in mgd) 2. MAXIMUM DAILY	4. FLOW b. TOTAL VOLUME (specify with units) 1. LONG TERM AVERAGE	4. FLOW b. TOTAL VOLUME (specify with units) 2. MAXIMUM DAILY	4. FLOW c. DURATION (in days)
	See attachment 1							

III. PRODUCTION

A. Does an effluent guideline limitation promulgated by EPA under Section 304 of the Clean Water Act apply to your facility?

☒ YES (complete Item III-B) ☐ NO (go to Section IV)

B. Are the limitations in the applicable effluent guideline expressed in terms of production (or other measure of operation)?

☐ YES (complete Item III-C) ☒ NO (go to Section IV)

C. If you answered "yes" to Item III-B, list the quantity which represents an actual measurement of your level of production, expressed in the terms and units used in the applicable effluent guideline, and indicate the affected outfalls.

1. AVERAGE DAILY PRODUCTION a. QUANTITY PER DAY	b. UNITS OF MEASURE	c. OPERATION, PRODUCT, MATERIAL, ETC. (specify)	2. AFFECTED OUTFALLS (list outfall numbers)

IV. IMPROVEMENTS

A. Are you now required by any Federal, State or local authority to meet any implementation schedule for the construction, upgrading or operation of wastewater treatment equipment or practices or any other environmental programs which may affect the discharges described in this application? This includes, but is not limited to, permit conditions, administrative or enforcement orders, enforcement compliance schedule letters, stipulations, court orders, and grant or loan conditions.

☐ YES (complete the following table) ☒ NO (go to Item IV-B)

1. IDENTIFICATION OF CONDITION, AGREEMENT, ETC.	2. AFFECTED OUTFALLS a. no.	2. AFFECTED OUTFALLS b. source of discharge	3. BRIEF DESCRIPTION OF PROJECT	4. FINAL COMPLIANCE DATE a. required	4. FINAL COMPLIANCE DATE b. projected

B. ADDITIONAL: You may attach additional sheets describing any additional water pollution control programs (or other environmental projects which may affect your discharges) you now have underway or which you plan. Indicate whether each program is now underway or planned, and indicate your actual or planned schedules for construction. ☐ MARK "X" IF DESCRIPTION OF ADDITIONAL CONTROL PROGRAMS IS ATTACHED

 CONTINUE ON PAGE 3

EPA I.D. NUMBER (copy from Item 1 of Form 1)
CAD 077966349

Form Approved.
OMB No. 2040-0086
Approval expires 7-31-88

V. INTAKE AND EFFLUENT CHARACTERISTICS

A, B, & C: See instructions before proceeding – Complete one set of tables for each outfall – Annotate the outfall number in the space provided. NOTE: Tables V-A, V-B, and V-C are included on separate sheets numbered V-1 through V-9.

D. Use the space below to list any of the pollutants listed in Table 2c-3 of the instructions, which you know or have reason to believe is discharged or may be discharged from any outfall. For every pollutant you list, briefly describe the reasons you believe it to be present and report any analytical data in your possession.

1. POLLUTANT	2. SOURCE	1. POLLUTANT	2. SOURCE
Strontium Uranium Zirconium	Uranium and radioactive fission products of uranium including isotopes of strontium and zirconium may be released in minute amounts in discharge 001. Analytical data from discharge 001D are provided.		

VI. POTENTIAL DISCHARGES NOT COVERED BY ANALYSIS

Is any pollutant listed in Item V-C a substance or a component of a substance which you currently use or manufacture as an intermediate or final product or byproduct?

☐ YES *(list all such pollutants below)* ☒ NO *(go to Item VI-B)*

CONTINUED FROM THE FRONT

VII. BIOLOGICAL TOXICITY TESTING DATA

Do you have any knowledge or reason to believe that any biological test for acute or chronic toxicity has been made on any of your discharges or on a receiving water in relation to your discharge within the last 3 years?

☒ YES (Identify the test(s) and describe their purposes below) ☐ NO (go to Section VIII)

The current DCPP NPDES permit requires that a monthly static bioassay (96 hr TLM) be conducted in a grab sample from discharge 001.

VIII CONTRACT ANALYSIS INFORMATION

Were any of the analyses reported in Item V performed by a contract laboratory or consulting firm?

☒ YES (list the name, address, and telephone number of, and pollutants analyzed by, each such laboratory or firm below) ☐ NO (go to Section IX)

A. NAME	B. ADDRESS	C. TELEPHONE (area code & no.)	D. POLLUTANTS ANALYZED (list)
Central Coast Analytical Services	141 Suburban Road, Suite C-4 San Luis Obispo, CA 93401	(805) 543-2553	Part V-A and V-B (excl. V-B(j) (1), (2), (3), (4), and V-C except flow, temperature, pH and TRC.)
FGL Environmental Analytical Chemist	853 Corporation St. P.O. Box 72 Santa Paula, CA 93060-0272	(805) 525-3824	Part V-B(j)(1), (2) (3), and (4)

IX. CERTIFICATION

I certify under penalty of law that this document and all attachments were prepared under my direction or supervision in accordance with a system designed to assure that qualified personnel properly gather and evaluate the information submitted. Based on my inquiry of the person or persons who manage the system or those persons directly responsible for gathering the information, the information submitted is, to the best of my knowledge and belief, true, accurate, and complete. I am aware that there are significant penalties for submitting false information, including the possibility of fine and imprisonment for knowing violations.

A. NAME & OFFICIAL TITLE (type or print)	B. PHONE NO. (area code & no.)
Victor C. Furtado, Manager, Environmental Services	(415) 972-7746
C. SIGNATURE Victor C. Furtado	D. DATE SIGNED November 14, 1989

Strontium and Zirconium Discharged by Calendar Quarter

Discharge 001D

Nuclide	Third Quarter 1988 Batch Mode (Ci)	Third Quarter 1988 Grams[2]	Fourth Quarter 1988 Batch Mode (Ci)	Fourth Quarter 1988 Grams[2]
strontium-89	4.14 E-4	1.47 E-8	1.49 E-4	5.29 E-9
strontium-90[1]	3.70 E-5	2.62 E-7	2.23 E-5	1.58 E-7
zirconium-95[1]	1.08 E-3	5.14 E-8	5.09 E-3	2.42 E-7

Nuclide	First Quarter 1989 Batch Mode (Ci)	First Quarter 1989 Grams[2]	Second Quarter 1989 Batch Mode (Ci)	Second Quarter 1989 Grams[2]
strontium-89	3.67 E-5	1.30 E-9	4.51 E-5	1.60 E-9
strontium-90[1]	MDA[3]	--	MDA[3]	--
strontium-91	MDA[3]	--	1.25 E-5	3.51 E-12
zirconium-95[1]	9.67 E-4	4.60 E-8	2.32 E-5	1.10 E-9

Note

[1] Includes Daughters

[2] Derivation of Mass Discharged

Nuclide	Half life	Specific Activity (curies/gram)	1/Specific Activity (grams/curie)
Sr 89	52.7 days	2.82×10^{4}	3.55×10^{-5}
Sr 90	27.7 years	141	7.09×10^{-3}
Sr 91	9.67 hours	3.56×10^{6}	2.81×10^{-7}
Sr 92	2.71 hours	1.26×10^{7}	7.96×10^{-8}
Zr 95	65.5 days	2.10×10^{4}	4.76×10^{-5}

[3] MDA - None Detected

Attachment 1

DIABLO CANYON POWER PLANT
INTERMITTENT WASTE STREAMS

OUTFALL & WASTE STREAM NUMBER	OPERATION	FREQUENCY OF DISCHARGE	DESIGN FLOW	
			FLOW RATE (GPM) (Instantaneous)	TOTAL VOLUME (In Gallons/Day)
001 D	Liquid Radioactive Waste Treatment System	Daily	60	8.64×10^4
001 F	Turbine Building Sump		120	1.5×10^5
001 H	Condensate Demineralizer Regenerant	Daily	100	1.5×10^5
001 J	Condensate Pumps Discharge Header Overboard	6 times annually	1,000	3.6×10^5
001 K	Condenser Tube Sheet Leak Detection Dump Tank Overboard	5 times annually	100	1.4×10^5
001 M	Waste Holding and Treatment System	Semi-monthly		8.0×10^5
002	Intake Structure Building Floor Drains	Daily		3.5×10^5
003	Intake Screen Wash	9 times daily	4,000	5.76×10^6

Attachment 1 (Cont.)

DIABLO CANYON POWER PLANT
INTERMITTENT WASTE STREAMS

OUTFALL & WASTE STREAM NUMBER	OPERATION	FREQUENCY OF DISCHARGE	DESIGN FLOW	
			FLOW RATE (GPM) (Instantaneous)	TOTAL VOLUME (In Gallons/Day)
004	Yard Storm Drain	Variable	21,090*	3.8×10^4
005	Yard Storm Drain	Variable	38,600*	1.35×10^5
008	Yard Storm Drain: Storm Water Runoff	Variable/ Seasonal	17,500*	1.4×10^5
009	Yard Storm Drain	Variable	13,900*	2.4×10^4
013	Yard Storm Drains	Variable	14,360*	1.1×10^5
014	Yard Storm Drains	Variable	3,140*	
015	Yard Storm Drains	Variable	900*	
016	Biolab Seawater Supply Pump Valve Drain	Annual	------	5,000
017	Seawater Reverse Osmosis Blowdown Drain	Annual	------	2,500

* Based on Maximum Storm Water Volume (GPM, 10-Year Event)

List of Chemicals Used in the Chemistry Laboratories*

Primary Chemistry Laboratory Inventory

Chemical Name	% Weight	Constituent
Sodium Sulfide	100%	Sodium Sulfite
Toluene	100%	Toluene
Argon	100%	Argon
Acetic Acid	99.5%	Acetic Acid
Sodium Thiosulfate	<5%	Sodium Thiosulfate Pentahydrate
Acetylene	100%	Acetylene
Sodium Acetate Trihydrate	100%	Sodium Acetate Trihydrate
Ammonium Carbonate	100%	Ammonium Carbonate
Ammonium Acetate	100%	Ammonium Acetate
Ammonium Oxalate	100%	Ammonium Oxalate
Acetone	100%	Acetone
Potassium Hydroxide	<83%	Potassium Hydroxide
	<3.5%	Potassium Carbonate
Ferrous Ammonium Sulfate	100%	Ferrous Ammonium Sulfate
EDTA Standard	100%	Ethylenediaminetetracetic Acid
Ammonium Molybdate	81-85%	Ammonium Molybdate
Ascorbic Acid	100%	Ascorbic Acid
pH 10 Buffer		
Nickel Chloride	99%	Nickel Chloride
Ethyl Alcohol	>94.9%	Ethyl Alcohol
Ethyl Propionate	97%	Ethyl Propionate
Nitric Acid	70%	Nitric Acid
Barium Nitrate	>99%	Barium Nitrate
Nitric Acid (Red Fuming)	55-70%	Nitric Acid
Ferric Chloride	100%	Ferric Chloride
Potassium Persulfate	>99%	Potassium Persulfate
Hydrazine Dihydrochloride	100%	Hydrazine Dihydrochloride
Lithium Standard	<1%	Lithium
	<2%	Hydrochloric Acid
Magnesium Standard	>1%	Magnesium
	<2%	Hydrochloric Acid
Anhydrous Magnesium Perchlorate	96%	Magnesium Perchlorate
	4%	Moisture
Manganous Sulfate	>98%	Manganous Sulfate
Potassium Chromate	100%	Potassium Chromate Methyl Isobutyl
Ketone	100%	Methyl Isobutyl Ketone
Potassium Iodate	100%	Potassium Iodate
Methyl Orange	99%	Benzene Sulfonate
Hydrofluoric Acid	47-70%	Hydrofluoric Acid
Potassium Permanganate	>95%	Potassium Permanganate
Buffer		
Oxalic Acid	100%	Oxalic Acid
Sodium Hydroxide	>96%	Sodium Hydroxide
Potassium Biphthalate	100%	Potassium Biphthalate

Primary Chemistry Laboratory Inventory Contd.

Chemical Name	% Weight	Constituent
Mannitol	100%	D-Mannitol
Mercuric Nitrate	100%	Mercuric Nitrate
Mercuric Thiocyanate	100%	Mercuric Thiocyanate
Oxygen	100%	Oxygen
Lithium Hydroxide	100%	Lithium Hydroxide Monohydrate
Mercuric Iodide	>99%	Mercuric Iodide
Ammonium Chloride	100%	Ammonium Chloride
Freon	100%	Trichlorotrifluoroethane
Methanol Absolute	>99%	Methyl Alcohol
Sodium Bicarbonate	100%	Sodium Bicarbonate
Sodium Borate	100%	Anhydrous Sodium Borate
Cobalt Chloride	100%	Cobalt Chloride
Phenylarsine Oxide	<30%	Propylene Glycol
	<5%	Sodium Hydroxide
	<1%	Phenylarsine Oxide
Strontium Chloride	100%	Strontium Chloride
Sodium Sulfate	100%	Sodium Sulfate
Stoddard Solvent	100%	Mineral Spirits
Sodium Metabisulfite	100%	Metabisulfite
Sodium Tetrafluoroborate	100%	Sodium Tetrafluoroborate
Sulfuric Acid	98%	Sulfuric Acid
Barium Chloride	99%	Barium Chloride
Zinc Dust	>98%	Zinc
Zinc	>98%	Zinc
Hydrochloric Acid	<38%	Hydrogen Chloride
Copper Sulfate	100%	Copper Sulfate
Boric Acid	100%	Boric Acid
Hydrogen Peroxide	20%	Hydrogen Peroxide
pH 4 Buffer	<1%	Potassium Hydrogen Phthalate
Hydroxylamine Hydrochloride	100%	Hydroxylamine Hydrochloride
pH 7 Buffer	<1%	Potassium Dihydrogen Phosphate
	<1%	Disodium Hydrogen Phosphate
Ammonium Hydroxide	28%	Ammonium Hydroxide
Calcium Chloride	95.8%	Calcium Chloride
	2.6%	Sodium Chloride
Alcohol, Anhydrous	>94.9%	Ethyl Alcohol
Cupric Chloride	100%	Cupric Chloride
Glycerol	96-99.5%	Glycerine
Potassium Iodide	>99%	Potassium Iodide
Benzaldehyde	100%	Benzaldehyde
Potassium Chloride	100%	Potassium Chloride
Sodium Carbonate	100%	Sodium Carbonate
Silver Nitrate	99.9%	Silver Nitrate
Sodium Chloride	98%	Sodium Chloride

Secondary Chemistry Laboratory Inventory

Chemical Name	% Weight	Constituent
Alcohol, Anhydrous	>94.9%	Ethyl Alcohol
Acetylene	100%	Acetylene
Mercuric Iodide	>99%	Mercuric Iodide
pH 10 Buffer		
Potassium Dichromate	>99%	Potassium Dichromate
Ammonium Chloride	100%	Ammonium Chloride
Sodium Hydroxide	>96%	Sodium Hydroxide
Sodium Thiosulfate	<5%	Sodium Thiosulfate Pentahydrate
Barium Nitrate	>99%	Barium Nitrate
Ferric Chloride	100%	Ferric Chloride
pH 7 Buffer	<1%	Potassium Dihydrogen Phosphate
	<1%	Disodium Hydrogen Phosphate
Mercuric Nitrate	100%	Mercuric Nitrate
Sodium Tetrafluoroborate	100%	Sodium Tetrafluoroborate
Sodium Chloride	98%	Sodium Chloride
Calcium Chloride	95.8%	Calcium Chloride
	2.6%	Sodium Chloride
Sodium Carbonate	100%	Sodium Carbonate
Nitric Acid	70%	Nitric Acid
EDTA	100%	Ethylenediaminetetracetic Acid
Ethyl Propionate	97%	Ethyl Propionate
Phenylarsine Oxide	<30%	Propylene Glycol
	<5%	Sodium Hydroxide
	<1%	Phenylarsine Oxide
pH 4 Buffer	<1%	Potassium Hydrogen Phthalate
Potassium Chromate	100%	Potassium Chromate
Potassium Biphthalate	100%	Potassium Biphthalate
Chromium Standard	<1%	Potassium Dichromate
	<1%	Sodium Hydroxide Pellets
Acetone	100%	Acetone
Potassium Chloride	100%	Potassium Chloride
Ammonium Molybdate	81-85%	Ammonium Molybdate
Potassium Hydroxide	<83%	Potassium Hydroxide
	3-5%	Potassium Carbonate
Boric Acid	100%	Boric Acid
Potassium Iodide	5%	Potassium Iodide
Freon	100%	Trichlorotrifluoroethane
Hydrazine Dihydrochloride	100%	Hydrazine Dihydrochloride
Potassium Permanganate	>95%	Potassium Permanganate
Potassium Persulfate	>99%	Potassium Persulfate
Iron Standard	0.1%	Ferrous Chloride
Potassium Iodate	100%	Potassium Iodate
Anhydrous Magnesium Perchlorate	96%	Magnesium Perchlorate
	4%	Moisture

Secondary Chemistry Laboratory Inventory Contd.

Chemical Name	% Weight	Constituent
Glycerol	96-99%	Glycerine
Silver Standard	<1%	Silver Nitrate
	<5%	Nitric Acid
Potassium Iodide	>99%	Potassium Iodide
Manganous Sulfate	>98%	Manganous Sulfate
Hydrochloric Acid	<38%	Hydrogen Chloride
Acetic Acid	99.5%	Acetic Acid
Sodium Sulfate	100%	Sodium Sulfate
Sodium Citrate	100%	Sodium Citrate
Stoddard Solvent	100%	Mineral Spirits
Zinc Standard	<1%	Zinc
	<1%	Hydrochloric Acid
Oxalic Acid	100%	Oxalic Acid Sodium
Hypochlorite	7-16%	Sodium Hypochlorite
	5-13%	Sodium Chloride
	0.5-.9%	Sodium Hydroxide
Nickel Standard	<1%	Nickel Nitrate
Oxygen	100%	Oxygen
Sodium Borate	100%	Anhydrous Sodium Borate
Toluene	100%	Toluene
Sodium Acetate Trihydrate	100%	Sodium Acetate Trihydrate
Methyl Isobutyl Ketone	100%	Methyl Isobutyl Ketone
Argon	100%	Argon
Ferrous Ammonium Sulfate	100%	Ferrous Ammonium Sulfate
Copper Standard	0.1%	Copper Sulfate
Ammonium Pyrolidine Carodithionate	100%	Ammonium Pyrolidine Carodithionate
Methanol, Absolute	>99%	Methyl Alcohol
Sulfuric Acid	98%	Sulfuric Acid
Mercuric Thiocyanate	100%	Mercuric Thiocyanate
Copper Sulfate	100%	Copper Sulfate
Sodium Monoethylamine	100%	Sodium Monoethylamine
Mercuric Thiocyanate	100%	Mercuric Thiocyanate
Phosphoric Acid	85%	Phosphoric Acid
Benzaldehyde	100%	Benzaldehyde
Sodium Nitrate	100%	Sodium Nitrate
Ammonium Hydroxide	28%	Ammonium Hydroxide
Chlorine Reagent Powder Pillows		Chlorine
Sodium Persulfate	100%	Cupric Sulfate, 5-hydrate

* Per our February 14th conversation, this is the most recent list of chemicals used in the chemistry laboratories. This list is subject to change.

Some of these chemicals are listed in Section 117.3, 40 CFR.

This is a list of chemicals which may be used in the chemical laboratories during the next five years.

Calcium Hypochlorite
Chlorine
Mercuric Sulfate
Mercurous Nitrate
Phosphorous

PLEASE PRINT OR TYPE IN THE UNSHADED AREAS ONLY. You may report some or all of this information on separate sheets *(use the same format)* instead of completing these pages. SEE INSTRUCTIONS.

EPA I.D. NUMBER *(copy from Item 1 of Form 1)*: CAD 077966349

Form Approved
OMB No. 2000-0039
Approval expires 3-31-84

V. INTAKE AND EFFLUENT CHARACTERISTICS *(continued from page 3 of Form 2-C)*

OUTFALL NO. 001

PART A - You must provide the results of at least one analysis for every pollutant in this table. Complete one table for each outfall. See instructions for additional details.

1. POLLUTANT	2. EFFLUENT a. MAXIMUM DAILY VALUE (1) CONCENTRATION	(2) MASS	b. MAXIMUM 30 DAY VALUE (if available) (1) CONCENTRATION	(2) MASS	c. LONG TERM AVRG. VALUE (if available) (1) CONCENTRATION	(2) MASS	d. NO. OF ANALYSES	3. UNITS (specify if blank) a. CONCENTRATION	b. MASS	4. INTAKE (optional) a. LONG TERM AVERAGE VALUE (1) CONCENTRATION	(2) MASS	b. NO. OF ANALYSES
a. Biochemical Oxygen Demand *(BOD)*	< 3						1	mg/L				
b. Chemical Oxygen Demand *(COD)*	640*						1	mg/L				
c. Total Organic Carbon *(TOC)*	2						1	mg/L		2		1
d. Total Suspended Solids *(TSS)*	< 5						1	mg/L		< 5		1
e. Ammonia *(as N)*	< 0.1						1	mg/L		< 0.1		1
f. Flow	VALUE 2.63×10^9 GPD		VALUE		VALUE			mg/L		VALUE 2.63×10^9 GPD		
g. Temperature *(winter)*	VALUE 22.7		VALUE 20.9		VALUE 19.8		183	°C		VALUE 11.0		183
h. Temperature *(summer)*	VALUE 24.7		VALUE 22.8		VALUE 20.9		183	°C		VALUE 11.7		183
i. pH	MINIMUM 7.7	MAXIMUM	MINIMUM	MAXIMUM			1	STANDARD UNITS				

PART B - Mark "X" in column 2-a for each pollutant you know or have reason to believe is present. Mark "X" in column 2-b for each pollutant you believe to be absent. If you mark column 2-a for any pollutant, you must provide the results of at least one analysis for that pollutant. Complete one table for each outfall. See the instructions for additional details and requirements.

1. POLLUTANT AND CAS NO. *(if available)*	2. MARK "X" a. BELIEVED PRESENT	b. BELIEVED ABSENT	3. EFFLUENT a. MAXIMUM DAILY VALUE (1) CONCENTRATION	(2) MASS	b. MAXIMUM 30 DAY VALUE (if available) (1) CONCENTRATION	(2) MASS	c. LONG TERM AVRG. VALUE (if available) (1) CONCENTRATION	(2) MASS	d. NO. OF ANALYSES	4. UNITS a. CONCENTRATION	b. MASS	5. INTAKE (optional) a. LONG TERM AVERAGE VALUE (1) CONCENTRATION	(2) MASS	b. NO. OF ANALYSES
a. Bromide (24959-67-9)	X		< 1						1	mg/L		< 1		1
b. Chlorine, Total Residual	X		0.09**						8	mg/L		< 0.02		8
c. Color	X		15						1	mg/L		15		1
d. Fecal Coliform		X	< 2						1	mg/L		--		
e. Fluoride (16984-48-8)	X		0.8						1	mg/L		0.8		1
f. Nitrate-Nitrite *(as N)*	X		16.01						1	mg/L		12.01		1

** concentration during 4-hour period while chlorinating
* Note: Positive interference for chloride in seawater.

CONTINUE ON REVERSE

ITEM V-B CO[illegible]D FROM FRONT

1. POLLUTANT AND CAS NO. (if available)	[illegible]ARK 'X' a. BELIEVED PRESENT	b. BELIEVED ABSENT	3. EFFLUENT a. MAXIMUM DAILY VALUE (1) CONCENTRATION	(2) MASS	b. MAXIMUM 30 DAY VALUE (if available) (1) CONCENTRATION	(2) MASS	c. LONG TERM AVRG. VALUE (if available) (1) CONCENTRATION	(2) MASS	d. NO. OF ANALYSES	4. UNITS a. CONCENTRATION	b. MASS	5. INTAK[illegible]onal) a. LONG TE[illegible] AVERAGE VALUE (1) CONCENTRATION	(2) MASS	b. NO. OF ANALYSES
g. Nitrogen, Total Organic (as N)	X		< 0.5						1	mg/L		0.5		1
h. Oil and Grease	X		< 3						1	mg/L		3.0		1
i. Phosphorus (as P), Total (7723-14-0)	X		0.08						1	mg/L		0.09		1
j. Radioactivity														
(1) Alpha, Total	X		45±69						1	pCi/L		74±55		1
(2) Beta, Total	X		395±99						1	pCi/L		356±89		1
(3) Radium, Total	X		< 1.0±1.0						1	pCi/L		1.0±1.0		1
(4) Radium 226, Total	X											xx		
k. Sulfate (as SO_4) (14808-79-8)	X		5900						1	mg/L		2500		1
l. Sulfide (as S)	X		< 0.1						1	mg/L		0.1		1
m. Sulfite (as SO_3) (14265-45-3)		X	< 20						1	mg/L		20		1
n. Surfactants	X		< 0.02						1	mg/L		0.02		1
o. Aluminum, Total (7429-90-5)	X		< 0.2						1	mg/L		0.02		1
p. Barium, Total (7440-39-3)	X		0.01						1	mg/L		0.01		1
q. Boron, Total (7440-42-8)	X		3.9						1	mg/L		3.8		1
r. Cobalt, Total (7440-48-4)	X		< 0.05						1	mg/L		0.05		1
s. Iron, Total (7439-89-6)	X		0.05						1	mg/L		0.05		1
t. Magnesium, Total (7439-95-4)	X		1200						1	mg/L		1200		1
u. Molybdenum, Total (7439-98-7)	X		< 0.1						1	mg/L		0.1		1
v. Manganese, Total (7439-96-5)	X		< 0.02						1	mg/L		0.02		1
w. Tin, Total (7440-31-5)	X		< 1.0						1	mg/L		1.0		1
x. Titanium, Total (7440-32-6)	X		< 0.05						1	mg/L		0.05		1

CONTINUE ON PAGE V-3

EPA I.D. NUMBER (copy from Item 1 of Form 1)	OUTFALL NUMBER
CAD 077966349	001

Form Approved.
OMB No 2040-0086
Approval expires 7-31-88

CONTINUED FROM PAGE 3 OF FORM 2-C

PART C - If you are a primary industry and this outfall contains process wastewater, refer to Table 2c-2 in the instructions to determine which of the GC/MS fractions you must test for. Mark "X" in column 2-a for all such GC/MS fractions that apply to your industry and for ALL toxic metals, cyanides, and total phenols. If you are not required to mark column 2-a *(secondary industries, nonprocess wastewater outfalls, and nonrequired GC/MS fractions)*, mark "X" in column 2-b for each pollutant you know or have reason to believe is present. Mark "X" in column 2-c for each pollutant you believe is absent. If you mark column 2a for any pollutant, you must provide the results of at least one analysis for that pollutant. If you mark column 2b for any pollutant, you must provide the results of at least one analysis for that pollutant if you know or have reason to believe it will be discharged in concentrations of 10 ppb or greater. If you mark column 2b for acrolein, acrylonitrile, 2,4 dinitrophenol, or 2-methyl-4, 6 dinitrophenol, you must provide the results of at least one analysis for each of these pollutants which you know or have reason to believe that you discharge in concentrations of 100 ppb or greater. Otherwise, for pollutants for which you mark column 2b, you must either submit at least one analysis or briefly describe the reasons the pollutant is expected to be discharged. Note that there are 7 pages to this part; please review each carefully. Complete one table *(all 7 pages)* for each outfall. See instructions for additional details and requirements.

1. POLLUTANT AND CAS NUMBER (if available)	2. MARK 'X'			3. EFFLUENT							4. UNITS		5. INTAKE (optional)		
	a. TESTING REQUIRED	b. BELIEVED PRESENT	c. BELIEVED ABSENT	a. MAXIMUM DAILY VALUE (1) CONCENTRATION	a. MAXIMUM DAILY VALUE (2) MASS	b. MAXIMUM 30 DAY VALUE (if available) (1) CONCENTRATION	b. MAXIMUM 30 DAY VALUE (if available) (2) MASS	c. LONG TERM AVRG. VALUE (if available) (1) CONCENTRATION	c. LONG TERM AVRG. VALUE (if available) (2) MASS	d. NO. OF ANALYSES	a. CONCENTRATION	b. MASS	a. LONG TERM AVERAGE VALUE (1) CONCENTRATION	a. LONG TERM AVERAGE VALUE (2) MASS	b. NO. OF ANALYSES
METALS, CYANIDE, AND TOTAL PHENOLS															
1M. Antimony, Total (7440-36-0)	X	X		< 0.005						1	mg/L		< 0.005		1
2M. Arsenic, Total (7440-38-2)	X	X		< 0.005						1	mg/L		< 0.005		1
3M. Beryllium, Total, 7440-41-7)	X	X		< 0.01						1	mg/L		< 0.01		1
4M. Cadmium, Total (7440-43-9)	X	X		< 0.001						1	mg/L		< 0.001		1
5M. Chromium, Total (7440-47-3)	X	X		< 0.005						1	mg/L		< 0.005		1
6M. Copper, Total (7440-50-8)	X	X		< 0.002						1	mg/L		< 0.002		1
7M. Lead, Total (7439-92-1)	X	X		< 0.02						1	mg/L		< 0.02		1
8M. Mercury, Total (7439-97-6)	X	X		< 0.0002						1	mg/L		< 0.0002		1
9M. Nickel, Total (7440-02-0)	X	X		< 0.05						1	mg/L		< 0.05		1
10M. Selenium, Total (7782-49-2)	X	X		< 0.005						1	mg/L		< 0.005		1
11M. Silver, Total (7440-22-4)	X	X		< 0.005						1	mg/L		< 0.005		1
12M. Thallium, Total (7440-28-0)	X	X		< 0.05						1	mg/L		0.08		1
13M. Zinc, Total (7440-66-6)	X	X		< 0.005						1	mg/L		0.048		1
14M. Cyanide, Total (57-12-5)	X		X	< 0.01						1	mg/L		0.01		1
15M. Phenols, Total	X	X		0.002						1	mg/L		< 0.001		1
DIOXIN															
2,3,7,8-Tetrachlorodibenzo-P-Dioxin (1764-01-6)			X	DESCRIBE RESULTS											

CONTINUE ON REVERSE

CONTINUED FROM FRONT

1. POLLUTANT AND CAS NUMBER (If available)	a. Test Included	b. Believed Present	c. Believed Absent	3. EFFLUENT a. MAXIMUM DAILY VALUE (1) Concentration	(2) Mass	b. MAXIMUM 30 DAY VALUE (if available) (1) Concentration	(2) Mass	c. LONG TERM AVRG. VALUE (if available) (1) Concentration	(2) Mass	d. NO. OF ANALYSES	4. UNITS a. CONCENTRATION	b. MASS	5. INTAKE (optional) a. LONG TERM AVERAGE VALUE (1) Concentration	(2) Mass	b. NO. OF ANALYSES
GC/MS FRACTION – VOLATILE COMPOUNDS															
1V. Acrolein (107-02-8)	X		X	< 10						1	µg/L		< 10		1
2V. Acrylonitrile (107-13-1)	X		X	< 10						1	µg/L		< 10		1
3V. Benzene (71-43-2)	X		X	< 0.2						1	µg/L		1.0		1
4V. Bis (Chloromethyl) Ether (542-88-1)	X		X	< 10						1	µg/L		< 10		1
5V. Bromoform (75-25-2)	X		X	< 0.4						1	µg/L		< 0.4		1
6V. Carbon Tetrachloride (56-23-5)	X		X	< 0.2						1	µg/L		< 0.2		1
7V. Chlorobenzene (108-90-7)	X		X	< 0.2						1	µg/L		< 0.2		1
8V. Chlorodibromomethane (124-48-1)	X		X	< 0.2						1	µg/L		< 0.2		1
9V. Chloroethane (75-00-3)	X		X	< 0.2						1	µg/L		< 0.2		1
10V. 2-Chloroethylvinyl Ether (110-75-8)	X		X	< 2						1	µg/L		< 2		1
11V. Chloroform (67-66-3)	X		X	< 1						1	µg/L		< 1		1
12V. Dichlorobromomethane (75-27-4)	X		X	< 0.2						1	µg/L		< 0.2		1
13V. Dichlorodifluoromethane (75-71-8)	X		X	< 5						1	µg/L		< 5		1
14V. 1,1-Dichloroethane (75-34-3)	X		X	< 0.2						1	µg/L		< 0.2		1
15V. 1,2-Dichloroethane (107-06-2)	X		X	< 0.2						1	µg/L		< 0.2		1
16V. 1,1-Dichloroethylene (75-35-4)	X		X	< 0.2*						1	µg/L		< 0.2		1
17V. 1,2-Dichloropropane (78-87-5)	X		X	< 0.2						1	µg/L		< 0.2		1
18V. 1,3-Dichloropropylene (542-75-6)	X		X	< 0.2**						1	µg/L		< 0.2		1
19V. Ethylbenzene (100-41-4)	X		X	< 0.2						1	µg/L		< 0.2		1
20V. Methyl Bromide (74-83-9)	X		X	< 0.2						1	µg/L		< 0.2		1
21V. Methyl Chloride (74-87-3)	X		X	< 0.2						1	µg/L		< 0.2		1

CONTINUE ON PAGE V-5

EPA Form 3510-2C (Rev. 12-80)
Previous edition may be used

* same as 1,1 dichloroethene
** same as 1,3 dichloropropene
} Hazardous Properties of Industrial Materials 7th Ed. - Sax/Lening

EPA I.D. NUMBER (copy from Item 1 of Form 1): CAD 077966349 | OUTFALL NUMBER: 001

Approval expires 7-31-88

1. POLLUTANT AND CAS NUMBER (if available)	2. MARK "X" a. TESTING REQUIRED	b. BELIEVED PRESENT	c. BELIEVED ABSENT	3. EFFLUENT a. MAXIMUM DAILY VALUE (1) CONCENTRATION	(2) MASS	b. MAXIMUM 30 DAY VALUE (if available) (1) CONCENTRATION	(2) MASS	c. LONG TERM AVRG. VALUE (if available) (1) CONCENTRATION	(2) MASS	d. NO. OF ANALYSES	4. UNITS a. CONCENTRATION	b. MASS	5. INTAKE (optional) a. LONG TERM AVERAGE VALUE (1) CONCENTRATION	(2) MASS	b. NO. OF ANALYSES
GC/MS FRACTION – VOLATILE COMPOUNDS (continued)															
22V. Methylene Chloride (75-09-2)	X		X	< 2.0						1	ug/L		< 2.0		1
23V. 1,1,2,2-Tetrachloroethane (79-34-5)	X		X	< 1.0						1	ug/L		< 1.0		1
24V. Tetrachloroethylene (127-18-4)	X		X	< 0.2						1	ug/L		< 0.2		1
25V. Toluene (108-88-3)	X	X		< 1.0						1	ug/L		2		1
26V. 1,2-Trans-Dichloroethylene (156-60-5)	X		X	< 0.2						1	ug/L		< 0.2		1
27V. 1,1,1-Trichloroethane (71-55-6)	X		X	< 0.5						1	ug/L		< 0.5		1
28V. 1,1,2-Trichloroethane (79-00-5)	X		X	< 0.2						1	ug/L		< 0.2		1
29V. Trichloroethylene (79-01-6)	X		X	< 0.2						1	ug/L		< 0.2		1
30V. Trichlorofluoromethane (75-69-4)	X		X	< 1.0						1	ug/L		< 1.0		1
31V. Vinyl Chloride (75-01-4)	X		X	< 0.2						1	ug/L		< 0.2		1
GC/MS FRACTION – ACID COMPOUNDS															
1A. 2-Chlorophenol (95-57-8)	X		X	< 1						1	ug/L		< 1		1
2A. 2,4-Dichlorophenol (120-83-2)	X		X	< 1						1	ug/L		< 1		1
3A. 2,4-Dimethylphenol (105-67-9)	X		X	< 1						1	ug/L		< 1		1
4A. 4,6-Dinitro-O-Cresol (534-52-1)	X		X	< 5						1	ug/L		< 5		1
5A. 2,4-Dinitrophenol (51-28-5)	X		X	< 5						1	ug/L		< 5		1
6A. 2-Nitrophenol (88-75-5)	X		X	< 1						1	ug/L		< 1		1
7A. 4-Nitrophenol (100-02-7)	X		X	< 1						1	ug/L		< 1		1
8A. P-Chloro-M-Cresol (59-50-7)	X		X	< 1						1	ug/L		< 1		1
9A. Pentachlorophenol (87-86-5)	X		X	< 1						1	ug/L		< 1		1
10A. Phenol (108-95-2)	X	X		< 1						1	ug/L		< 1		1
11A. 2,4,6-Trichlorophenol (88-06-2)	X		X	< 1						1	ug/L		< 1		1

CONTINUE ON REVERSE

CONTIN[illegible]OM THE FRONT

1. POLLUTANT AND CAS NUMBER (if available)	2. MARK "X" a. Test inc. acquired	b. Acquired prev.	c. Acquired after	3. EFFLUENT a. MAXIMUM DAILY VALUE (1) Concentration	(2) Mass	b. MAXIMUM 30 DAY VALUE (if available) (1) Concentration	(2) Mass	c. LONG TERM AVG. VALUE (if available) (1) Concentration	(2) Mass	d. NO. OF ANALYSES	4. UNITS a. CONCENTRATION	b. MASS	5. [illegible]AKE (optional) a. LONG TERM AVERAGE VALUE (1) Concentration	(2) Mass	b. NO. ANALYSE
GC/MS FRACTION – BASE/NEUTRAL COMPOUNDS															
1B. Acenaphthene (83-32-9)	X		X	< 1						1	µg/L		< 1		1
2B. Acenaphtylene (208-96-8)	X		X	< 1						1	µg/L		< 1		1
3B. Anthracene (120-12-7)	X		X	< 1						1	µg/L		< 1		1
4B. Benzidine (92-87-5)	X		X	< 2						1	µg/L		< 2		1
5B. Benzo (a) Anthracene (56-55-3)	X		X	< 1						1	µg/L		< 1		1
6B. Benzo (a) Pyrene (50-32-8)	X		X	< 1						1	µg/L		< 1		1
7B. 3,4-Benzo-fluoranthene (205-99-2)	X		X	< 1						1	µg/L		< 1		1
8B. Benzo (ghi) Perylene (191-24-2)	X		X	< 1						1	µg/L		< 1		1
9B. Benzo (k) Fluoranthene (207-08-9)	X		X	< 1						1	µg/L		< 1		1
10B. Bis (2-Chloro-ethoxy) Methane (111-91-1)	X		X	< 1						1	µg/L		< 1		1
11B. Bis (2-Chloro-ethyl) Ether (111-44-4)	X		X	< 2						1	µg/L		< 2		1
12B. Bis (2-Chloro-isopropyl) Ether (39638-32-9)	X		X	< 2						1	µg/L		< 2		1
13B. Bis (2-Ethyl-hexyl) Phthalate (117-81-7)	X		X	< 5						1	µg/L		< 5		1
14B. 4-Bromo-phenyl Phenyl Ether (101-55-3)	X		X	< 2						1	µg/L		< 2		1
15B. Butyl Benzyl Phthalate (85-68-7)	X		X	< 5						1	µg/L		< 5		1
16B. 2-Chloro-naphthalene (91-58-7)	X		X	< 1						1	µg/L		< 1		1
17B. 4-Chloro-phenyl Phenyl Ether (7005-72-3)	X		X	< 2						1	µg/L		< 2		1
18B. Chrysene (218-01-9)	X		X	< 1						1	µg/L		< 1		1
19B. Dibenzo (a,h) Anthracene (53-70-3)	X		X	< 1						1	µg/L		< 1		1
20B. 1,2-Dichloro-benzene (95-50-1)	X		X	< 2						1	µg/L		< 2		1
21B. 1,3-Dichloro-benzene (541-73-1)	X		X	< 2						1	µg/L		< 2		1

CONTINUE ON PAGE

EPA I.D. NUMBER (copy from Item 1 of Form 1): CAD 077966349

OUTFALL NUMBER: 001

Form Approved
OMB No 2040-0086
Approval expires 7-31-88

1. POLLUTANT AND CAS NUMBER (if available)	2. MARK "X" a. TESTING REQUIRED	b. BELIEVED PRESENT	c. BELIEVED ABSENT	3. EFFLUENT a. MAXIMUM DAILY VALUE (1) CONCENTRATION	(2) MASS	b. MAXIMUM 30 DAY VALUE (if available) (1) CONCENTRATION	(2) MASS	c. LONG TERM AVRG. VALUE (if available) (1) CONCENTRATION	(2) MASS	d. NO. OF ANALYSES	4. UNITS a. CONCENTRATION	b. MASS	5. INTAKE (optional) a. LONG TERM AVERAGE VALUE (1) CONCENTRATION	(2) MASS	b. NO. OF ANALYSES
GC/MS FRACTION – BASE/NEUTRAL COMPOUNDS (continued)															
22B. 1,4-Dichlorobenzene (106-46-7)	X		X	< 2						1	ug/L		< 2		1
23B. 3,3'-Dichlorobenzidine (91-94-1)	X		X	< 5						1	ug/L		< 5		1
24B. Diethyl Phthalate (84-66-2)	X		X	< 1						1	ug/L		< 1		1
25B. Dimethyl Phthalate (131-11-3)	X		X	< 1						1	ug/L		< 1		1
26B. Di-N-Butyl Phthalate (84-74-2)	X		X	< 1						1	ug/L		< 1		1
27B. 2,4-Dinitrotoluene (121-14-2)	X		X	< 2						1	ug/L		< 2		1
28B. 2,6-Dinitrotoluene (606-20-2)	X		X	< 5						1	ug/L		< 5		1
29B. Di-N-Octyl Phthalate (117-84-0)	X	X		< 1						1	ug/L		< 1		1
30B. 1,2-Diphenylhydrazine (as Azobenzene) (122-66-7)	X		X	< 10						1	ug/L		< 10		1
31B. Fluoranthene (206-44-0)	X		X	< 1						1	ug/L		< 1		1
32B. Fluorene (86-73-7)	X		X	< 1						1	ug/L		< 1		1
33B. Hexachlorobenzene (118-74-1)	X		X	< 5						1	ug/L		< 5		1
34B. Hexachlorobutadiene (87-68-3)	X		X	< 2						1	ug/L		< 2		1
35B. Hexachlorocyclopentadiene (77-47-4)	X		X	< 5						1	ug/L		< 5		1
36B. Hexachloroethane (67-72-1)	X		X	< 1						1	ug/L		< 1		1
37B. Indeno (1,2,3-cd) Pyrene (193-39-5)	X		X	< 1						1	ug/L		< 1		1
38B. Isophorone (78-59-1)	X		X	< 5						1	ug/L		< 5		1
39B. Naphthalene (91-20-3)	X		X	< 1						1	ug/L		< 1		1
40B. Nitrobenzene (98-95-3)	X		X	< 2						1	ug/L		< 2		1
41B. N-Nitrosodimethylamine (62-75-9)	X		X	< 20						1	ug/L		< 20		1
42B. N-Nitrosodi-N-Propylamine (621-64-7)	X		X	< 1						1	ug/L		< 1		1

CONTINUE FROM THE FRONT

1. POLLUTANT AND CAS NUMBER (if available)	2. MARK "X" a. Testing Required	b. Believed Present	c. Believed Absent	3. EFFLUENT a. MAXIMUM DAILY VALUE (1) Concentration	(2) Mass	b. MAXIMUM 30 DAY VALUE (if available) (1) Concentration	(2) Mass	c. LONG TERM AVRG. VALUE (if available) (1) Concentration	(2) Mass	d. NO. OF ANALYSES	4. UNITS a. CONCENTRATION	b. MASS	5. INTAKE (optional) a. LONG TERM AVERAGE VALUE (1) Concentration	(2) Mass	b. NO. OF ANALYSES
GC/MS FRACTION – BASE/NEUTRAL COMPOUNDS (continued)															
43B. N-Nitrosodiphenylamine (86-30-6)	X		X	< 2						1	µg/L		< 2		1
44B. Phenanthrene (85-01-8)	X		X	< 1						1	µg/L		< 1		1
45B. Pyrene (129-00-0)	X		X	< 1						1	µg/L		< 1		1
46B. 1,2,4-Trichlorobenzene (120-82-1)	X		X	< 2						1	µg/L		< 2		1
GC/MS FRACTION – PESTICIDES															
1P. Aldrin (309-00-2)															
2P. α-BHC (319-84-6)					NOT REQUIRED										
3P. β-BHC (319-85-7)															
4P. γ-BHC (58-89-9)															
5P. δ-BHC (319-86-8)															
6P. Chlordane (57-74-9)															
7P. 4,4'-DDT (50-29-3)															
8P. 4,4'-DDE (72-55-9)															
9P. 4,4'-DDD (72-54-8)															
10P. Dieldrin (60-57-1)															
11P. α-Endosulfan (115-29-7)															
12P. β-Endosulfan (115-29-7)															
13P. Endosulfan Sulfate (1031-07-8)															
14P. Endrin (72-20-8)															
15P. Endrin Aldehyde (7421-93-4)															
16P. Heptachlor (76-44-8)															

CONTINUE ON PAGE V-9

CONTINUED FROM PAGE V-8

EPA I.D. NUMBER (copy from Item 1)	OUTFALL NUMBER
CAD 077966349	001

Form Approved
OMB No. 2000-00
Approval expires 3

1. POLLUTANT AND CAS NUMBER (if available)	2. MARK "X" a. Believed Present	b. Believed Absent	c. Analysis Requested	3. EFFLUENT a. MAXIMUM DAILY VALUE (1) Concentration	(2) Mass	b. MAXIMUM 30 DAY VALUE (if available) (1) Concentration	(2) Mass	c. LONG TERM AVG. VALUE (if available) (1) Concentration	(2) Mass	d. NO. OF ANALYSES	4. UNITS a. CONCENTRATION	b. MASS	5. INTAKE (optional) a. LONG TERM AVERAGE VALUE (1) Concentration	(2) Mass	b. NO. OF ANALYSES
GC/MS FRACTION – PESTICIDES (continued)															
17P. Heptachlor Epoxide (1024-57-3)															
18P. PCB-1242 (53469-21-9)															
19P. PCB-1254 (11097-69-1)															
20P. PCB-1221 (11104-28-2)				NOT REQUIRED											
21P. PCB-1232 (11141-16-5)															
22P. PCB-1248 (12672-29-6)															
23P. PCB-1260 (11096-82-5)															
24P. PCB-1016 (12674-11-2)															
25P. Toxaphene (8001-35-2)															

PLEASE PRINT OR TYPE IN THE UNSHADED AREAS ONLY. You may report some or all of this information on separate sheets *(use the same format)* instead of completing these pages. SEE INSTRUCTIONS.

EPA I.D. NUMBER *(copy from Item I of Form 1)*: CAD 077966349

Form Approved OMB No 2040-0086 Approval expires 7-31-88

V. INTAKE AND EFFLUENT CHARACTERISTICS *(continued from page 3 of Form 2-C)*

OUTFALL NO. 002

PART A - You must provide the results of at least one analysis for every pollutant in this table. Complete one table for each outfall. See instructions for additional details.

1. POLLUTANT	2. EFFLUENT a. MAXIMUM DAILY VALUE (1) CONCENTRATION	(2) MASS	b. MAXIMUM 30 DAY VALUE *(if available)* (1) CONCENTRATION	(2) MASS	c. LONG TERM AVRG. VALUE *(if available)* (1) CONCENTRATION	(2) MASS	d. NO. OF ANALYSES	3. UNITS *(specify if blank)* a. CONCENTRATION	b. MASS	4. INTAKE *(optional)* a. LONG TERM AVERAGE VALUE (1) CONCENTRATION	(2) MASS	b. NO. OF ANALYSES
a. Biochemical Oxygen Demand *(BOD)*	4						1	mg/L				
b. Chemical Oxygen Demand *(COD)*	520*						1	mg/L				
c. Total Organic Carbon *(TOC)*	2						1	mg/L				
d. Total Suspended Solids *(TSS)*	< 5						1	mg/L				
e. Ammonia *(as N)*	< 0.1						1	mg/L				
f. Flow	VALUE 3.5×10^5 GPD		VALUE		VALUE					VALUE		
g. Temperature *(winter)*	VALUE 15		VALUE		VALUE			°C		VALUE		
h. Temperature *(summer)*	VALUE		VALUE		VALUE			°C		VALUE		
i. pH	MINIMUM 7.8	MAXIMUM	MINIMUM	MAXIMUM				STANDARD UNITS				

PART B - Mark "X" in column 2-a for each pollutant you know or have reason to believe is present. Mark "X" in column 2-b for each pollutant you believe to be absent. If you mark column 2a for any pollutant which is limited either directly, or indirectly but expressly, in an effluent limitations guideline, you must provide the results of at least one analysis for that pollutant. For other pollutants for which you mark column 2a, you must provide quantitative data or an explanation of their presence in your discharge. Complete one table for each outfall. See the instructions for additional details and requirements.

1. POLLUTANT AND CAS NO. *(if available)*	2. MARK 'X' a. BELIEVED PRESENT	b. BELIEVED ABSENT	3. EFFLUENT a. MAXIMUM DAILY VALUE (1) CONCENTRATION	(2) MASS	b. MAXIMUM 30 DAY VALUE *(if available)* (1) CONCENTRATION	(2) MASS	c. LONG TERM AVRG. VALUE *(if available)* (1) CONCENTRATION	(2) MASS	d. NO. OF ANALYSES	4. UNITS a. CONCENTRATION	b. MASS	5. INTAKE *(optional)* a. LONG TERM AVERAGE VALUE (1) CONCENTRATION	(2) MASS	b. NO. OF ANALYSES
a. Bromide (24959-67-9)	X		< 1						1	mg/L				
b. Chlorine, Total Residual	X		< 0.02						1	mg/L				
c. Color	X		20						1	units				
d. Fecal Coliform		X	< 2						1	mpn/100ml				
e. Fluoride (16984-48-8)	X		0.9						1	mg/L				
f. Nitrate-Nitrite *(as N)*	X		11.01						1	mg/L				

CONTINUE ON REVERSE

*Note: Positive interference for chloride in seawater.

ITEM V-B CONTINUED FROM FRONT

1. POLLUTANT AND CAS NO. (if available)	2. MARK "X" a. PRESENT	b. ABSENT	3. EFFLUENT a. MAXIMUM DAILY VALUE (1) CONCENTRATION	(2) MASS	b. MAXIMUM 30 DAY VALUE (if available) (1) CONCENTRATION	(2) MASS	c. LONG TERM AVRG. VALUE (if available) (1) CONCENTRATION	(2) MASS	d. NO. OF ANALYSES	4. UNITS a. CONCENTRATION	b. MASS	5. INTAKE (optional) a. LONG TERM AVERAGE VALUE (1) CONCENTRATION	(2) MASS	b. NO. OF ANALYSES
g. Nitrogen, Total Organic (as N)	X		11						1	mg/L				
h. Oil and Grease	X		< 3						1	mg/L				
i. Phosphorus (as P), Total (7723-14-0)	X		0.10						1	mg/L				
j. Radioactivity														
(1) Alpha, Total	X		<1±81						1	pCi/L				
(2) Beta, Total	X		674±169						1	pCi/L				
(3) Radium, Total	X		<1.0±1.0						1	pCi/L				
(4) Radium 226, Total	X													
k. Sulfate (as SO_4) (14808-79-8)	X		3000						1	mg/L				
l. Sulfide (as S)	X		< 0.1						1	mg/L				
m. Sulfite (as SO_3) (14265-45-3)		X	< 20						1	mg/L				
n. Surfactants	X		< 0.02						1	mg/L				
o. Aluminum, Total (7429-90-5)	X		0.2						1	mg/L				
p. Barium, Total (7440-39-3)	X		< 0.01						1	mg/L				
q. Boron, Total (7440-42-8)	X		8.0						1	mg/L				
r. Cobalt, Total (7440-48-4)	X		< 0.05						1	mg/L				
s. Iron, Total (7439-89-6)	X		.32						1	mg/L				
t. Magnesium, Total (7439-95-4)	X		1300						1	mg/L				
u. Molybdenum, Total (7439-98-7)	X		< 0.1						1	mg/L				
v. Manganese, Total (7439-96-5)	X		0.02						1	mg/L				
w. Tin, Total (7440-31-5)	X		< 1.0						1	mg/L				
x. Titanium, Total (7440-32-6)	X		< 0.05						1	mg/L				

CONTINUE ON PAGE V-3

PLEASE PRINT OR TYPE IN THE UNSHADED AREAS ONLY. You may report some or all of this information on separate sheets *(use the same format)* instead of completing these pages. SEE INSTRUCTIONS.

EPA I.D. NUMBER *(copy from Item I of Form 1)*: CAD 077966349

Form Approved OMB No 2040-0086 Approval expires 7-31-88

V. INTAKE AND EFFLUENT CHARACTERISTICS *(continued from page 3 of Form 2-C)*

OUTFALL NO. 003

PART A - You must provide the results of at least one analysis for every pollutant in this table. Complete one table for each outfall. See instructions for additional details.

1. POLLUTANT	2. EFFLUENT a. MAXIMUM DAILY VALUE (1) CONCENTRATION	(2) MASS	b. MAXIMUM 30 DAY VALUE (if available) (1) CONCENTRATION	(2) MASS	c. LONG TERM AVRG. VALUE (if available) (1) CONCENTRATION	(2) MASS	d. NO. OF ANALYSES	3. UNITS (specify if blank) a. CONCENTRATION	b. MASS	4. INTAKE (optional) a. LONG TERM AVERAGE VALUE (1) CONCENTRATION	(2) MASS	b. NO. OF ANALYSES
a. Biochemical Oxygen Demand *(BOD)*	4						1	mg/L				
b. Chemical Oxygen Demand *(COD)*	380*						1	mg/L				
c. Total Organic Carbon *(TOC)*	3						1	mg/L				
d. Total Suspended Solids *(TSS)*	< 5						1	mg/L				
e. Ammonia *(as N)*	< 0.1						1	mg/L				
f. Flow	VALUE 5.76×10^6 GPD		VALUE		VALUE					VALUE		
g. Temperature *(winter)*	VALUE 14		VALUE		VALUE			°C		VALUE		
h. Temperature *(summer)*	VALUE		VALUE		VALUE			°C		VALUE		
i. pH	MINIMUM 7.6	MAXIMUM	MINIMUM	MAXIMUM				STANDARD UNITS				

PART B - Mark "X" in column 2-a for each pollutant you know or have reason to believe is present. Mark "X" in column 2-b for each pollutant you believe to be absent. If you mark column 2a for any pollutant which is limited either directly, or indirectly but expressly, in an effluent limitations guideline, you must provide the results of at least one analysis for that pollutant. For other pollutants for which you mark column 2a, you must provide quantitative data or an explanation of their presence in your discharge. Complete one table for each outfall. See the instructions for additional details and requirements.

1. POLLUTANT AND CAS NO. *(if available)*	2. MARK "X" a. BELIEVED PRESENT	b. BELIEVED ABSENT	3. EFFLUENT a. MAXIMUM DAILY VALUE (1) CONCENTRATION	(2) MASS	b. MAXIMUM 30 DAY VALUE (if available) (1) CONCENTRATION	(2) MASS	c. LONG TERM AVRG. VALUE (if available) (1) CONCENTRATION	(2) MASS	d. NO. OF ANALYSES	4. UNITS a. CONCENTRATION	b. MASS	5. INTAKE (optional) a. LONG TERM AVERAGE VALUE (1) CONCENTRATION	(2) MASS	b. NO. OF ANALYSES
a. Bromide (24959-67-9)	X		< 1						1	mg/L				
b. Chlorine, Total Residual	X		< 0.02						1	mg/L				
c. Color	X		20						1	units				
d. Fecal Coliform		X	< 2						1	mpn/100ml				
e. Fluoride (16984-48-8)	X		1.1						1	mg/L				
f. Nitrate-Nitrite *(as N)*	X		9.01						1	mg/L				

CONTINUE ON REVERSE

*Note: Positive interference from chloride in seawater.

ITEM V-B CONTINUED FROM FRONT

1. POLLUTANT AND CAS NO. (if available)	2. MARK "X" a. PRESENT	b. BELIEVED ABSENT	3. EFFLUENT a. MAXIMUM DAILY VALUE (1) CONCENTRATION	(2) MASS	b. MAXIMUM 30 DAY VALUE (if available) (1) CONCENTRATION	(2) MASS	c. LONG TERM AVRG. VALUE (if available) (1) CONCENTRATION	(2) MASS	d. NO. OF ANALYSES	4. UNITS a. CONCENTRATION	b. MASS	5. INTAKE (optional) a. LONG TERM AVERAGE (1) CONCENTRATION	[illegible]	b. NO. OF ANALYSES
g. Nitrogen, Total Organic (as N)	X		0.7						1	mg/L				
h. Oil and Grease	X		< 3						1	mg/L				
i. Phosphorus (as P), Total (7723-14-0)	X		< 0.01						1	mg/L				
j. Radioactivity														
(1) Alpha, Total	X		24±75						1	mg/L				
(2) Beta, Total	X		496±152						1	mg/L				
(3) Radium, Total	X		< 1.0±1.0						1	mg/L				
(4) Radium 226, Total	X													
k. Sulfate (as SO_4) (14808-79-8)	X		4500						1	mg/L				
l. Sulfide (as S)	X		< 0.1						1	mg/L				
m. Sulfite (as SO_3) (14265-45-3)		X	< 20						1	mg/L				
n. Surfactants		X	< 0.02						1	mg/L				
o. Aluminum, Total (7429-90-5)	X		0.3						1	mg/L				
p. Barium, Total (7440-39-3)	X		< 0.01						1	mg/L				
q. Boron, Total (7440-42-8)	X		13						1	mg/L				
r. Cobalt, Total (7440-48-4)	X		< 0.05						1	mg/L				
s. Iron, Total (7439-89-6)	X		0.13						1	mg/L				
t. Magnesium, Total (7439-95-4)	X		1800						1	mg/L				
u. Molybdenum, Total (7439-98-7)	X		< 0.1						1	mg/L				
v. Manganese, Total (7439-96-5)	X		0.03						1	mg/L				
w. Tin, Total (7440-31-5)	X		< 1.0						1	mg/L				
x. Titanium, Total (7440-32-6)	X		< 0.05						1	mg/L				

CONTINUE ON PAGE V-3

PLEASE PRINT OR TYPE IN THE UNSHADED AREAS ONLY. You may report some or all of this information on separate sheets *(use the same format)* instead of completing these pages. SEE INSTRUCTIONS.

EPA I.D. NUMBER *(copy from Item 1 of Form 1)*: CAD 077966349

Form Approved. OMB No 2040-0086 Approval expires 7-31-88

V. INTAKE AND EFFLUENT CHARACTERISTICS *(continued from page 3 of Form 2-C)*

OUTFALL NO. 004

PART A - You must provide the results of at least one analysis for every pollutant in this table. Complete one table for each outfall. See instructions for additional details.

1. POLLUTANT	2. EFFLUENT a. MAXIMUM DAILY VALUE (1) CONCENTRATION	(2) MASS	b. MAXIMUM 30 DAY VALUE (if available) (1) CONCENTRATION	(2) MASS	c. LONG TERM AVRG. VALUE (if available) (1) CONCENTRATION	(2) MASS	d. NO. OF ANALYSES	3. UNITS (specify if blank) a. CONCENTRATION	b. MASS	4. INTAKE (optional) a. LONG TERM AVERAGE VALUE (1) CONCENTRATION	(2) MASS	b. NO. OF ANALYSES
a. Biochemical Oxygen Demand *(BOD)*	6						1	mg/L				
b. Chemical Oxygen Demand *(COD)*	440*						1	mg/L				
c. Total Organic Carbon *(TOC)*	1						1	mg/L				
d. Total Suspended Solids *(TSS)*	< 5						1	mg/L				
e. Ammonia *(as N)*	< 0.1						1	mg/L				
f. Flow	VALUE 1.73 ± 10^6 GPD		VALUE		VALUE					VALUE		
g. Temperature *(winter)*	VALUE 14		VALUE		VALUE			°C		VALUE		
h. Temperature *(summer)*	VALUE		VALUE		VALUE			°C		VALUE		
i. pH	MINIMUM 7.8	MAXIMUM	MINIMUM	MAXIMUM				STANDARD UNITS				

PART B - Mark "X" in column 2-a for each pollutant you know or have reason to believe is present. Mark "X" in column 2-b for each pollutant you believe to be absent. If you mark column 2a for any pollutant which is limited either directly, or indirectly but expressly, in an effluent limitations guideline, you must provide the results of at least one analysis for that pollutant. For other pollutants for which you mark column 2a, you must provide quantitative data or an explanation of their presence in your discharge. Complete one table for each outfall. See the instructions for additional details and requirements.

1. POLLUTANT AND CAS NO. *(if available)*	2. MARK 'X' a. BELIEVED PRESENT	b. BELIEVED ABSENT	3. EFFLUENT a. MAXIMUM DAILY VALUE (1) CONCENTRATION	(2) MASS	b. MAXIMUM 30 DAY VALUE (if available) (1) CONCENTRATION	(2) MASS	c. LONG TERM AVRG. VALUE (if available) (1) CONCENTRATION	(2) MASS	d. NO. OF ANALYSES	4. UNITS a. CONCENTRATION	b. MASS	5. INTAKE (optional) a. LONG TERM AVERAGE VALUE (1) CONCENTRATION	(2) MASS	b. NO. OF ANALYSES
a. Bromide (24959-67-9)	X		< 1						1	mg/L				
b. Chlorine, Total Residual	X		< 0.02						1	mg/L				
c. Color	X		15						1	units				
d. Fecal Coliform	X		13						1	mpn/ 100ml				
e. Fluoride (16984-48-8)	X		0.8						1	mg/L				
f. Nitrate-Nitrite *(as N)*	X		7.3						1	mg/L				

CONTINUE ON REVERSE

*Note: Positive interference from chloride in seawater.

1. POLLUTANT AND CAS NO. (if available)	2. MARK "X" a. PRESENT	b. BELIEVED ABSENT	3. EFFLUENT a. MAXIMUM DAILY VALUE (1) CONCENTRATION	(2) MASS	b. MAXIMUM 30 DAY VALUE (if available) (1) CONCENTRATION	(2) MASS	c. LONG TERM AVRG. VALUE (if available) (1) CONCENTRATION	(2) MASS	d. NO. OF ANALYSES	4. UNITS a. CONCENTRATION	b. MASS	5. INTAKE (optional) a. LONG TERM AVERAGE VALUE (1) CONCENTRATION	(2)	b. NO. OF ANALYSES
g. Nitrogen, Total Organic (as N)	X		0.7						1	mg/L				
h. Oil and Grease	X		< 3						1	mg/L				
i. Phosphorus (as P), Total (7723-14-0)	X		< 0.01						1	mg/L				
j. Radioactivity														
(1) Alpha, Total	X		24±75						1	mg/L				
(2) Beta, Total	X		496±152						1	mg/L				
(3) Radium, Total	X		< 1.0±1.0						1	mg/L				
(4) Radium 226, Total	X													
k. Sulfate (as SO_4) (14808-79-8)	X		4500						1	mg/L				
l. Sulfide (as S)	X		< 0.1						1	mg/L				
m. Sulfite (as SO_3) (14265-45-3)		X	< 20						1	mg/L				
n. Surfactants		X	< 0.02						1	mg/L				
o. Aluminum, Total (7429-90-5)	X		0.3						1	mg/L				
p. Barium, Total (7440-39-3)	X		< 0.01						1	mg/L				
q. Boron, Total (7440-42-8)	X		13						1	mg/L				
r. Cobalt, Total (7440-48-4)	X		< 0.05						1	mg/L				
s. Iron, Total (7439-89-6)	X		0.13						1	mg/L				
t. Magnesium, Total (7439-95-4)	X		1800						1	mg/L				
u. Molybdenum, Total (7439-98-7)	X		< 0.1						1	mg/L				
v. Manganese, Total (7439-96-5)	X		0.03						1	mg/L				
w. Tin, Total (7440-31-5)	X		< 1.0						1	mg/L				
x. Titanium, Total (7440-32-6)	X		< 0.05						1	mg/L				

CONTINUE ON PAGE V-3

ENCLOSURE 2

2. The Diablo Canyon Nuclear Power Plant, which has two units capable of generating a total of 2,269 MW, uses up to 2,540 MGD of seawater for the primary purpose of main condenser cooling. Smaller amounts of in-plant chemical wastes, low-level radioactive wastes and stormwater runoff are also discharged. Cooling water is brought into the plant from the Intake Cove located south of the plant and discharged to Diablo Cove (Discharge 001), southwest of the plant. Intake structure floor drains (Discharge 002) discharge into the Intake Cove west of the cooling water intakes. Intake screen wash (Discharge 003) is discharged into the ocean on the west breakwater. The Biolab and Yard Storm Drain (Discharge 004) discharge to the cooling water Intake Cove east of the intake structure. Stormwater (Discharges 006 and 007) and Yard Storm Drain (005) are discharged into the ocean at three points downcoast of the Intake Cove. The Biolab Seawater Supply Pump Valve Drain (016) and the Seawater Reverse Osmosis System Blowdown Drain (017) both discharge into the Intake Cove east of the intake structure. Stormwater and yard drainage are also discharged to Diablo Creek (Discharges 008, 009, 010, 011, 012, 013, 014 and 015.)

3. An application for renewal of the National Pollution Discharge Elimination System (NPDES) permit was submitted to the Board on November 15, 1989. NPDES Permit No. CA0003751 was last issued by the Board on July 12, 1985.

4. Waste discharges are described as follows:

<u>Discharge 001 - Once-Through Cooling Water</u>

Design Flow: 2,540 MGD with two units operating. Cooling water for the steam condensers and other miscellaneous service cooling systems will be pumped from the Pacific Ocean at the Intake Cove and discharged near the shore in Diablo Cove. Natural temperatures of water in both coves are assumed to be comparable at any time. Corrosion inhibitors used in closed cooling water systems may be discharged due to leakage or during operation, testing and maintenance activities.

In-plant waste streams that flow into the once-through cooling water system include:

<u>Discharge 001 A. (1),(2) and (3) Firewater System</u>

This discharge description has been deleted and those discharges which receive firewater (see note 1) from the firewater system are identified in the following discharge descriptions. The periodic testing and flushing of the firewater system are also described.

Discharge 001 B, Auxiliary Salt Water Cooling, 6.34×10^7 GPD

This system provides once-through cooling water for the component cooling water system (a closed cooling water loop servicing pumps and other loads in the electric generation system).

Corrosion inhibitors, such as chromate/potassium hydroxide based or molybdate/tolytriazole based, used in closed cooling water systems may be discharged due to leakage or during operation, testing and maintenance activities.

Part of the auxiliary salt water system may be taken out of service and filled with firewater to control biofouling. When the system is returned to service, approximately 40,000 gallons of firewater will be discharged.

Periodic flowrate testing of this system is performed using a dye, such as rhodamine. In such cases, PG&E will provide prior notification to the Board.

Discharge 001 C, Make-Up Water System Waste Effluent, 1.5×10^5 GPD (Intermittent)

This discharge description has been deleted. The pathway is no longer used and the make-up water filter backwash has been incorporated into 001 G.

Discharge 001 D, Liquid Radioactive Waste Treatment System Effluent, 5×10^4 GPD (Intermittent)

Liquid Radioactive Waste (LRW) from reactor systems is collected, treated and monitored in a LRW treatment system. This system includes storage tanks that permit radioactive decay, evaporators, activated carbon absorption filters, ion exchangers and filters to remove radioactive matter from the liquid wastes. Small amounts of sodium hydroxide, sulfuric acid, and polyelectrolyte may be used to assist in the processing of the liquid waste. Solid wastes produced by ion-exchange resins and filter media are collected and packaged for final shipment to an approved off-site burial site. After decay and/or treatment, individual batches of low-level waste are sampled and analyzed to determine compliance with discharge limits. If in compliance, the batch is discharge through a 5 micron filter into the auxiliary salt water system (Discharge 001B).

Wastes from other plant systems collected in the LRW treatment system from leakage or operation, maintenance and testing activities could contain boric acid, lithium hydroxide, sulfuric acid, ammonium hydroxide or other

neutralizing amines, hydrazine, sodium sulfate, chemicals from primary laboratory drains, hot shower and laundry wastes, metal cleaning wastes, corrosion inhibitors, such as chromate/potassium hydroxide based or molybdate/tolytriazole based, and a portion of the firewater system flush water (see note 1).

Discharge 001E, Service Cooling Water, 2.5×10^7 GPD

This system provides once-through cooling water for the Service Cooling Water System (a closed cooling water loop servicing pumps and other loads in the electric generation system.)

Corrosion inhibitors, such as chromate/potassium hydroxide based or molybdate/tolytriazole based, used in closed cooling water systems may be discharged due to leakage or during operation testing and maintenance activities.

Discharge 001 F, Turbine Building Sump, 1.5×10^5 GPD (Intermittent)

Floor drainage from the turbine building, buttress areas, other sumps, secondary systems, secondary systems chemistry laboratories, as well as a portion of the firewater system flush (see note 1), are collected in the turbine building sump. Wastes from secondary systems due to operations, maintenance, testing, or leakage could contain boric acid, sodium hydroxide, sulfuric acid and corrosion inhibitors such as chromate/potassium hydroxide based or molybdate/tolytriazole based. They also include chemicals from the secondary chemistry laboratory drains, hydrazine, ammonium hydroxide or other neutralizing amines. The turbine building sump effluent is treated in an oily water separator or the wastewater holding and treatment (WHAT) system prior to discharge to the main circulating water. Polyelectrolytes may be used to aid in the oily water separator process.

Discharge 001 G, Make-Up Water System Waste Effluent, 4.83×10^5 GPD

Filter backwashes from make-up water pretreatment and treatment systems, and the blowdown from the reverse osmosis systems are discharged to the main circulating water. This waste contains filter backwash, concentrated dissolved solids, and water treatment chemicals such as: sulfuric acid, sequestering agents, sodium hypochlorite, sodium hydroxide and sodium bisulfite.

Discharge 001 H, Condensate Demineralizer Regenerant, 1.5×10^5 GPD (Intermittent)

Waste regenerant solution from the steam-cycle condensate demineralizers is collected in regenerant waste tanks for neutralization, filtration and discharged to the main circulating water. The principal discharge constituent is sodium sulfate. It may also include hydrazine, boric acid, ammonia or other neutralizing amines and corrosion products.

Discharge 001 I, Seawater Evaporator Blowdown, 5.0×10^5 GPD

Seawater is concentrated in the seawater evaporation system and discharged. The effluent has a two-fold increase in salinity. Water treatment chemicals such as sulfuric acid and polymer are added to control scaling.

Discharge 001 J, Condensate Pumps Discharge Header Overboard, 3.6×10^5 GPD (Intermittent)

During normal start-up operations and occasionally during power operations, condensate from the main condenser hotwell will be periodically discharged to improve the water quality of condensate in the steam cycle.

The discharge is demineralized water containing ammonium hydroxide or other neutralizing amines, hydrazine, boric acid and impurities such as corrosion products and seawater which may result from condenser leakage.

Discharge 001 K, Condenser Tube Sheet Leak Detection Dump Tank Overboard, 1.4×10^5 GPD (Intermittent)

Water from the main condenser tube sheet collection trough will be discharged periodically in order to minimize seawater contamination of the condensate during periods of condenser tube sheet leakage. This discharge is demineralized water containing ammonium hydroxide or other neutralizing amines, hydrazine, boric acid and impurities such as corrosion products and seawater which may result from condenser leakage.

Discharge 001 L, Steam Generator Blowdown, 6.5×10^5 GPD

This normally continuous discharge contains corrosion products and seawater contaminants from condenser tube leakage. Treatment chemicals include boric acid, ammonium hydroxide or other neutralizing amines, and hydrazine.

Discharge 001 M, Wastewater Holding and Treatment System, 8×10^5 GPD (Intermittent)

Water routed to the wastewater holding and treatment (WHAT) system will be periodically discharged. This discharge includes wastes from discharges 001 F and H that may require further treatment. Treatment may involve coagulation, settling, oil removal, neutralization, filtration or chlorination. (See note 1 for firewater discharge.)

Discharge 001 N, Sewage Package Treatment System, 3.5×10^3 GPD

Domestic sanitary waste is treated in a package treatment facility with the normal discharge through the Unit 2 cooling water discharge (001). In the event both discharge pumps fail, an alternate discharge path is gravity overflowed to the seawater reverse osmosis system discharge (001 P). During a discharge to 001 P, a portion of the effluent could be discharged along with the intake screen wash water (003). In the event the package treatment facility is inoperable, sanitary waste will receive treatment in septic tanks and be discharged to leachfields.

Chlorine is periodically used in this system to control filamentous growth.

Discharge 001 P, Seawater Reverse Osmosis System Blowdown, 1.44×10^6 GPD

Blowdown from a seawater reverse osmosis system contains concentrated seawater brine and filter backwash with additions of water treatment chemicals such as sulfuric acid, ferric sulfate, a sequestering agent, sodium hypochlorite and sodium bisulfite. Seawater reverse osmosis system blowdown is normally discharged into the intake structure to the suction of the Auxiliary Salt Water pumps. When Auxiliary Salt Water Pumps are not operating, an alternate discharge path is to the intake screen wash (003). Treated domestic sanitary wastes (001 N) are discharged to the seawater reverse osmosis system blowdown, in the event of a failure of both discharge pumps.

Discharge 002, Intake Structure Building Floor Drains, 3.5×10^5 GPD (Intermittent)

Drainage from within the cooling water intake structure, as well as a portion of the firewater system flush (see note 1), will be collected in sumps and discharged inside the breakwater adjacent to the intake structure.

Corrosion inhibitors, such as chromate/potassium hydroxide based or molybdate/tolytriazole based, may be present in this discharge due to leakage or during operation, testing and maintenance activities.

Discharge 003, Intake Screen Wash, 5.76×10^6 GPD

Solid material native to the ocean is washed from traveling screens at the intake structure and collected in a collection pit with its own screen. Material collected on the collection pit screen is removed for land disposal. The screen wash water and the material that passes through the collection pit screen are pumped back to the ocean at a point located on the ocean side of the breakwater.

This system may contain hypochlorite during periods of circulating water chlorination. During heat treatment of main condensers, some heated seawater is discharged at this point.

The seawater reverse osmosis blowdown can also discharge at this point when the Auxiliary Salt Water Pumps are not operating.

Discharge 004, Biolab Discharge, 1.73×10^6 GPD, and Yard Storm Drain, Flow Variable

This discharge normally consists of the seawater discharge from the Biolab. Seawater is pumped from the intake structure to tanks used for observation and scientific study of marine organisms. This water is discharged continuously from the laboratory into the Intake Cove. This system may be filled with freshwater as a method of biofouling control. In addition, it may also contain trace amounts of hypochlorite and/or other oxidants which would result from future chlorine optimization studies. Storm water from a portion of the plant yard area is collected in a drainage system that occasionally includes firewater (see note 1), washwater, and stored water releases. This drainage system includes a 17,000 gallon sump which serves as a collection system for the Spill Prevention Control and Countermeasure (SPCC) Plan. This sump has a passive oil-water separation system for the containment of transformer oil.

The discharge also includes drainage for areas surrounding the Hazardous Waste Storage Building, Truck Bay, Firewater Storage Tank and Firewater Pump Building. Drainage joins the laboratory discharge before entering the Intake Cove.

Discharge 005, Yard Storm Drains, Flow Variable

Storm water runoff from the plant yard on the Unit 2 side of the radwaste buildings and the west side of the turbine buildings is collected in a drainage system which is routed to South Cove where it is discharged. This may occasionally include some firewater (see note 1), washwater and stored water releases. Rain water and washwater from the rotor warehouse and adjacent areas is collected in a sump and routed into this drainage system.

Discharge 006, Storm Water Runoff, Flow Variable

Storm water runoff from the Pacific Ocean side of the ridge to the southeast of the plant is collected in a drainage system which discharges into South Cove. Storm water runoff from the south warehouse, the shooting range, and a temporary parking lot also drains into this discharge.

Discharge 007, Storm Water Runoff, Flow Variable

Storm water runoff from an area to the south of the same ridge that drains to Discharge 006 is routed to the ocean near the southern site boundary. Drainage from the General Construction (GC) paint department, the temporary hazardous waste storage area, the diked gasoline and fuel oil tanks area and the soils lab are routed to this discharge.

Discharge 008, Yard Storm Drain, Flow Variable; Storm Water Runoff, Flow Variable

Storm water runoff from the yard area on the northwest side of the turbine building is drained to the west plant access road and discharged into Diablo Creek. This discharge may occasionally include some firewater (see note 1), washwater and stored water releases. Storm water runoff from watershed areas north of Diablo Creek is collected in a second drainage system. These two drainage systems share a common pipe which empties into Diablo Creek.

Discharge 009, Yard Storm Drain, Flow Variable

Storm water runoff from the north and northeast side of the Unit 1 auxiliary, containment, fuel handling and turbine buildings, and the protected area hazardous waste storage facility drains to the north side of the plant yard and discharges to Diablo Creek. This discharge may occasionally include some firewater (see note 1), washwater and stored water releases. This drainage system includes a 17,000 gallon sump which serves as a collection system for the Spill Prevention Control and Countermeasure (SPCC) Plan. The sump has a passive oil-water separation system

provided for containment of any spill of oil from a main transformer. (The protected area hazardous waste storage facility is a concrete diked enclosure surrounded by a locked chain-link fence.)

Discharge 010, Storm Water Runoff, Flow Variable

Storm water runoff from the hillside between the plant and the raw water reservoirs drains into a concrete culvert and is routed to the north along the hillside and discharged to Diablo Creek. This discharge may occasionally include some firewater (see note 1), washwater and stored water releases.

Discharge 011, Storm Water Runoff, Flow Variable

Storm water runoff from watershed areas north of Diablo Creek drains to the north switchyard access road and is routed to Diablo Creek.

Discharge 012, Storm Water Runoff, Flow Variable

Storm water runoff from the watershed area between the 230 KV switchyard and the 500 KV switchyard drains to a vertical shaft leading to the Diablo Creek culvert as it passes under the switchyard.

Discharge 013, Yard Storm Drain, Flow Variable

Storm water from the raw water reservoirs, the make-up water treatment area, and the 230 KV switchyard collects in a drainage system and is routed to Diablo Creek. Some runoff from the hillside under the 500 KV power lines is also included in this drainage. This drainage may occasionally include some firewater (see note 1), washwater and stored water releases.

Discharge 014, Yard Storm Drains, Flow Variable

Storm water runoff from laydown areas, the dog kennels, and the hillside south and east of the 500 KV switchyard is collected in a drainage ditch which is routed to Diablo Creek.

Discharge 015, Yard Storm Drain, Flow Variable

Storm water runoff from the area around the temporary auto facility, carwash slab, and adjacent roadway; and wash water from the carwash slab is collected in a sump with an oil water separator. The discharge is then routed through a pipe to Diablo Creek.

Discharge 016, Biolab Seawater Supply Pump Valve Drain, Flow Variable

A drain is provided in the seawater supply valve box for rainwater and any seawater which might be released into the box. Drain valves are provided in the box for repair purposes; normally, seawater is not intentionally released into the box.

The estimated quantity of seawater which can be drained from each line is 2,500 gallons.

Discharge 017, Seawater Reverse Osmosis System Blowdown Drain, Flow Variable

A low-point valve located beside the Intake Structure access road allows the 8" brine line to be drained for repair. Only rare use of the drain during the lifetime of the system is expected.

The estimated quantity of brine which can be drained from the line is 2,500 gallons.

Note 1

The firewater system is periodically flushed and tested as described below. This water is diverted to various discharges:

1. Firewater System Flush, 5.0×10^4 GPD (Intermittent)

Firewater will be discharged semiannually when portions of the system are flushed to ensure they remain clear. The discharges are to yard storm drains, building floor drains and the LRW.

2. Firewater System Flow Test, 2.4×10^4 GPD (Intermittent)

This test is conducted once every three years to comply with Nuclear Regulatory Commission requirements. The discharges are to yard storm drains, building floor drains and the LRW.

3. Fire Hose Test, 1.4×10^3 GPD (Intermittent)

This test is conducted annually on portions of the firewater system to comply with Nuclear Regulatory Commission requirements. The discharges are to yard storm drains and building floor drains and the LRW. (Unscheduled discharges from firewater systems will occur in the event of fire and on occasion from washing.)

In the future the firewater system may contain potassium molybdate, tolytriazole and a biocide for corrosion and scale protection.